McDowell Road Basin and Storm Drain Design Project

Final Data Design Book
Volume I

Registered Professional Engineer (Civil)
CERTIFICATE NO.
24767
ROBERT A.
EICHINGER
Date Signed 2/21/07
ARIZONA U.S.A.

FCD 2006C010
KHA 091131012

February 2007

MCDOWELL ROAD BASIN AND STORM DRAIN DESIGN

DATA DESIGN REPORT

A. Introduction

The McDowell Road Basin and Storm Drain design project is part of the recommended plan of the Spook Hill Area Drainage Master Plan Update (ADMPU). The project is being developed to reduce flooding potential south of McDowell Road between Hawes and Sossaman Roads. The ADMPU sized the storm drain for the 100-year return frequency storm event. Storm drain pipe sizes will range from 54-inches (two barrels) to 90-inches. The main inlet for the storm drain will be within the detention basin of the Thunder Mountain Estates subdivision. The majority of the flow conveyed by the storm drain will enter the system at this location. Additional storm drain inlets will be placed along the north side of McDowell Road. Inlets will also be constructed in sections on the north side of the right-of-way to direct flow to the storm drain. The outfall of the storm drain will be in the Las Sendas drainage channel that is parallel to McDowell Road west of Sossaman. The drainage channel is a regional drainage channel for the Las Sendas subdivision that is within a Public Facilities Utility Easement. The Las Sendas channel outfalls into the Spook Hill Flood Retarding Structure Reservoir.

This technical memorandum details the hydrologic and hydraulic analysis completed for the design project. The ADMPU, completed in 2002, indicated that 1,540 cfs was the maximum existing discharge the Las Sendas channel. To ensure the flow would not exceed the existing maximum discharge of 1,540 cfs, a detention basin on the northwest corner of McDowell and Sossaman was identified in the ADMPU to attenuate peak discharges that will be entering the storm drain from the contributing watershed. This site was not available for purchase by the District or the City of Mesa. Consequently, the detention basin site was moved to a five acre site on the southwest corner of McDowell and Sossaman Roads, which was purchased by the City of Mesa.

The ADMPU concept for the McDowell Road storm drain included a hydraulic splitter structure. The structure will convey the majority of the discharge to the Las Sendas Channel, but higher discharges will flow through a three 42-inch diameter reinforced concrete pipes to the McDowell Road Detention Basin. The design of the hydraulic splitter structure ensures that the maximum flow in the Las Sendas channel will not exceed 1,540 cfs.

A secondary purpose of the hydraulic splitter structure is to transition the storm drain size from a 90-inch diameter reinforced concrete pipe (RCP) to a reinforced concrete box culvert, which is the "by-pass culvert." The by-pass culvert is required so the storm drain can be placed beneath an existing City of Mesa 18-inch diameter sanitary sewer line located in Sossaman Road and a 12-inch diameter sanitary sewer located in McDowell Road. The by-pass culvert is a 7-foot span by 4-foot rise concrete box culvert.

On the north half of McDowell Road and west of Sossaman Road in the westbound lane, the by-pass culvert will transition to two 54-inch diameter RCP's that are 670 feet long and discharge into the Las Sendas channel. The storm drain will be placed under the west bound lanes of McDowell Road for approximately 405 feet. KHA determined that two 54-inch diameter pipes are a less expensive option over continuing the 7-foot span by 4-foot rise concrete box section for 670 feet. At the storm drain outfall into the Las Sendas channel, energy dissipation will be accomplished using a impact-type baffle wall energy dissipater.

The three 42-inch diameter reinforced concrete pipe culverts are know as the "detention basin culverts." The detention basin culverts will be placed below the Sossaman Road 18-inch diameter sanitary sewer. Upstream of the splitter structure, the storm drain consists of reinforced concrete pipe that has a diameter ranging from 54-inches to 90-inches. Table 1 shows the size and location of the different storm drain elements. Note the station numbers are offset from the McDowell Road monument line and do not always identify the true pipe lengths. Figure 1 shows the general horizontal layout of the storm drain.

Table 1. Storm Drain Elements.

Beginning Station	Ending Station	Storm Drain Pipe Size	Pipe Length (ft)	Remarks
Main Line Including By-Pass Culvert				
4+58	9+58	2-54-inch	1616	Two barrel RCP which outlet to the Las Sendas Channel
9+67	10+48	7-ft X 4-ft RCBC	89	One barrel RCBC
10+60	14+87.5	90-inch	445	Single RCP
14+87.5	38+87.5	78-inch	2,380	Single RCP
38+87.5	62+55	72-inch	2,320	Single RCP
62+52	63+50	2-54-inch	118	Single RCP
McDowell Road Detention Basin				
8+49	10+36	3-42-inch	555	Three barrel RCP from Splitter Structure to Basin
0+56	7+41	48-inch	793	Single RCP Basin Outlet to Las Sendas Channel

B. Hydrology

The Spook Hill ADMPU was used as a base model for the McDowell Road Basin and Storm Drain Design hydrologic analysis. Four options were investigated for the study:

1. Option 1 – Assumes the Oak Street Detention Basin from the Spook Hill ADMPU is not installed, flows are not routed through existing Thunder Mountain subdivision detention basin, but are collected before they enter the subdivision.

2. Option 2 - Assumes the Oak Street Detention Basin from the ADMPU is not installed, flows are routed through existing Thunder Mountain subdivision detention basin.

3. Option 3 - Assumes the Oak Street Detention Basin is installed, flows are not routed through existing Thunder Mountain subdivision detention basin, but are collected before they enter the subdivision.

4. Option 4 - Assumes the Oak Street Detention Basin is installed, flows are routed through existing Thunder Mountain subdivision detention basin.

Option 4 was used for the design of the McDowell Road Basin and Storm Drain.

The information and data included in this section was developed in conducting the tasks for hydrology. Data and information was collected and developed from following sources.

1. KHA developed existing structure data inventory from field notes and photographs collected during three separate site visits. The field notes included measurements and photographs for each structure along McDowell Road. The three site investigations were conducted on July 6, 2005, August 3, 2005, and August 18, 2005.

2. Subbasin data for DDMSW input was gathered from several sources. The sources included:
   - DDMSW input data from the ADMPU;
   - Soils table by area;
   - Soil descriptions;
   - Land use – existing conditions;
   - Rating curve for diversion to Culver-Hawes storm drain.

3. Stage-Storage-Discharge tables for detention basins were developed for several sites and options including:
   - Thunder Mountain Basin – Options 1 and 3;
   - Thunder Mountain Basin – Options 2 and 4;
   - McDowell Road Basin – Options 1 and 2 – No Oak Street Basin;
   - McDowell Road Basin – Options 3 and 4 – With Oak Street Basin;
   - Falcon Hill Ward, LDS Church Basin A (from As-Built Plans);
   - Falcon Hill Ward, LDS Church Basin B (from As-Built Plans);
   - Falcon Hill Ward, LDS Church both basins combined (from As-Built Plans);
   - Fire Station #16 – Basin A (SE corner);

- Fire Station #16 – Basin B (West side);
- Fire Station #16 – Both Basins Combined;

The Culver Hawes storm drain is a 54-inch diameter CMP that diverts flow under McDowell Road. There is a weir that is 2.5 feet tall that directs low flows to the culvert. When flow exceeds the height of the weir, flow enters the Thunder Mountain Channel and will ultimately flow to the McDowell Road Basin and Storm Drain system. The hydraulics for the culvert were developed using a nomograph. The total flow going over the weir was estimated using the weir equation. The rating curve developed for the culvert and weir along with photographs are in Appendix A.

The stage-area information for the McDowell Road Detention Basin was developed in AutoCAD based upon the preliminary grading design of the basin. A spreadsheet with the surface area and elevation data is in Appendix A. The storage requirements of the basin are also based upon the hydraulics of the splitter structure that diverts peak flows to the basin. Design changes to the basin may require refinement of the stage-area relationship of the basin and will alter the results.

Figure 2 is the Hydrology Watershed Map that was developed for this project. **Table 2** shows the peak discharge rates for the watershed. Concentration points are identified in **Figure 2**. The peak discharge rates are also identified in **Figure 2**. Along McDowell Road, hydrologic routing was accomplished the normal depth method for a channel. **Table 2** discharges were used to size the main line of the storm drain. The peak discharge for Option 4 at the Thunder Mountain Detention Basin is 519 cfs. The discharge increases at each downstream concentration point to a maximum of 704 cfs at the splitter structure. The HEC-1 Output is in the Hydrology Appendix of this report.

Table 3 shows the peak discharges in each individual subbasin. **Table 3** discharges were used to size the storm drain inlets and connector pipes. Storm drain inlets were placed at locations identified as concentration points identified in the hydrologic analysis.

Table 2. Peak Discharge Rates.

	Option 1	Option 2	Option 3	Option 4	
Concentration Point	No Oak basin, flows bypass TM basin	No Oak basin, flows into TM basin	Oak basin, flows bypass TM basin	Oak basin, flows into TM basin	Remarks
	Q (cfs)	Q (cfs)	Q (cfs)	Q (cfs)	
CP390C	906	906	357	379	Discharge at CP east of TM driveway on McDowell Rd
TOC-H	115	115	101	104	Diversion to Culver-Hawes system
TO390B	N/A	791	N/A	275	Discharge west from diversion
390SD1	791	N/A	256	N/A	Discharge to Storm Drain collector on McDowell
CP390A	141	141	206	210	
CP415B	N/A	N/A	1123	1205	Runoff to Oak St basin
S415B	N/A	N/A	52	55	Discharge from Oak St basin
CP390B	N/A	1046	N/A	613	Discharge into Thunder Mtn basin
390B	133	N/A	133	139	Discharge into Thunder Mtn basin
S390B	80	939	80	519	Discharge from Thunder Mtn basin
CP390	982	N/A	487	N/A	CP at corner of McDowell and Hawes
CPSD05	1026	970	543	559	
CPSD10	1048	988	566	581	
CPSD15	1057	996	576	589	
CPSD20	1067	1005	586	600	
CPSD25	1078	1022	594	615	
CPSD30	1121	1061	634	658	
CPSD35	1132	1098	639	694	
CPSD40	1136	1101	645	698	
CPSD45	1142	1106	651	704	
MCDB	1117	1098	326	302	Diversion to McDowell Rd Basin
TOLSCH	24	7	326	402	Flow directly to Las Sendas Channel
CP415A	1407	1392	1329	1436	Flow from "offsite" watershed to north & SD bypass
SMCDB	404	413	65	127	Discharge from McDowell Rd Basin
CPLSCH	1663	1641	1366	1538	Discharge in Las Sendas Channel from McDowell Rd basin and bypass and northern "offsite" watershed

Table 3. Peak Discharge Rates in the Sub-basins for All Options.

Subbasin ID	Q (cfs)	Area (mi^2)	Runoff (cfs/mi^2)
385C	647	0.501	1291
385B	103	0.077	1338
385A	23	0.018	1278
415B	442	0.276	1601
395A	191	0.185	1032
390C	226	0.121	1868
390B	139	0.101	1376
390A	33	0.024	1375
420B05	62	0.040	1550
420B10	26	0.025	1040
420B15	10	0.011	1091
420B20	12	0.014	857
420B25	37	0.084	440
420B30	46	0.055	836
420B35	40	0.034	1176
420B40	6	0.005	1200
420B45	7	0.007	1000

In HEC-1, a diversion record was placed at the location of the splitter structure, so the split between discharge going through the by-pass culvert to the Las Sendas channel and detention basin culvert to the McDowell Road Detention Basin would reflect the rating curve in the hydraulic splitter structure. After the peak flow going through the by-pass and detention basin culverts basin were identified, those peaks were used to analyze the splitter structure. The development of the hydraulics of the splitter structure is in Section C of this report.

A rating curve for the by-pass culvert was developed using the orifice equation for a single barrel 7-foot span by 4-foot rise RCBC based upon the total estimated head in the splitter structure. A rating curve for the detention basin culvert was developed using the weir equation based upon the same total head in the splitter structure. This was confirmed with a HY-8 analysis. The design criteria was to convey as much flow as possible to the Las Sendas Channel without the total flow in the Las Sendas channel exceeding 1,540 cfs (TOLSCH). Then excess flows would flow through the detention basin culvert into the McDowell Road Detention Basin (MCDB).

The diversion flow is the flow going into the McDowell Road Detention Basin (DQ) compared to the total discharge coming into the splitter structure (DI). The rating curves were input into HEC-1 to determine the peak discharges in the splitter structure. The rating curves for both culverts are in the Hydraulics Appendix.

Table 4 shows the peak discharge rates at the splitter structure for Option 4. The flows detailed in Table 4 result in a required 6.2 acre-feet volume of stormwater that must be detained by the basin. Detailed hydraulics were then completed for the splitter structure to confirm the accuracy of the rating curves, which will be described in the next section.

Table 4. Option 4 Peak Discharge Rates at the Splitter Structure.

Location	Discharge (cfs)	HEC-1 Location	HEC-1 Input Line No.
Discharge Into Splitter Structure	704	CPSD45	1645-1648
Peak Discharge Into By-pass Culvert	402	TOLSCH	1649-1655
Peak Discharge Diversion Into Detention Basin Culvert	302	MCDB	1653 and 1655
Peak Flow in Las Sendas Channel	1,538	CPLSCH	2037-2040

Table 5 shows the basin outlet analysis completed for the project. For the selected alternative, with the Oak Street Basin in-place and Thunder Mountain flows being routed through the reservoir, a single 48-inch diameter RCP is required to drain the detention basin. A restrictor plate over the entrance to the 48-inch diameter RCP was used to keep the peak discharge in the Las Sendas Channel below 1538 cfs. The summary output for the Basin Outlet Culvert is in the Hydraulics Appendix to this report.

Table 5. Basin Outlet Alternatives.

Option	High Water Elevation in Basin (ft)	Outlet Pipes
No Oak Basin, flows bypass TM Basin	7.47	3-48-inch
No Oak Basin, flows into TM Basin	7.9	3-48-inch
Oak Basin, flows bypass TM Basin	5.5	1-36-inch
Oak Basin, flows into TM Basin	9.0	1-48-inch
Basin Depth Varies		

C. Hydraulics

StormCAD by Haested Methods was used to determine the required storm drain pipe diameter and the hydraulic grade line for the design discharges for the main line including the by-pass to Las Sendas Channel and the connector pipes. As shown in **Table 2**, the design discharges in the storm drain main line range from 519 cfs at Concentration Point S390B at the Thunder Mountain Subdivision detention basin to 704 cfs at CPSD45 near the proposed McDowell Road Detention Basin.

The outfall of the storm drain and the detention basin is the Las Sendas Channel. A hydraulic splitter structure is designed to pass lower flows directly through the by-pass culvert directly to the Las Sendas Channel. The majority of the runoff volume will go directly to the Las Sendas Channel and will not enter the basin. Higher discharges rates in the McDowell Road Storm Drain that would exceed the 1,538 cfs that is allowed in the Las Sendas Channel will flow into the proposed detention basin and be slowly metered out to the Las Sendas Channel through a detention basin outlet pipe that is a 48-inch diameter RCP with a 41-inch diameter orifice restrictor plate. As shown in **Table 4**, the total discharge in the Las Sendas channel under the proposed plan is 1,538 cfs including flow through the 48-inch diameter detention basin outlet pipe.

The starting condition at the downstream end of the McDowell Road Storm Drain at the outfall of the by-pass into the Las Sendas Channel was set at the crown of the two barrel 54-inch diameter RCP storm drain outlet pipes. A peak discharge of 1,538 cfs in the Las Sendas channel results in a hydraulic depth of 3.8 feet in the channel. This was estimated using a normal Manning's calculation based on the existing conditions in the Las Sendas Channel. This would not cause backwater in the storm drain, but the energy dissipation structure at the outlet into the Las Sendas channel will be an impact-type baffle wall, so the starting condition of the HGL for the 100-year storm event for the storm drain was placed at the crown.

The starting tailwater condition in the storm drain was also set to a free flowing condition to see if there would be any difference in the Hydraulic Grade Line. Under this condition, the pipe is not flowing completely full,

Junction Structure No. 2/Splitter Structure

Junction Structure No. 2 (Splitter Structure) limits the flow that goes into the by-pass culvert so the peak discharge rate in the Las Sendas channel will not exceed 1,538 cfs. The initial estimate of the peak discharges flowing through the splitter structure into the by-pass and detention basin culverts were developed in HEC-1 and are shown in **Table 4**. These flows were used to size the by-pass culvert going directly to Las Sendas Channel and the detention basin culvert as a part of the storm drain system. The rating curve for the by-pass culvert was developed using the orifice equation. The rating curve for the basin culvert was developed using the weir equation and was confirmed with HY-8.

StormCAD was then used to calculate the hydraulic grade line in the storm drain to confirm the accuracy of the rating curves.

The general layout of the splitter structure is Sheet 35 of 55 in the plan set. The overall approach sizing the basin and storm drain was iterative starting with estimating the sizes of the by-pass and basin culverts and developing the rating curves that were input into HEC-1. The HEC-1 rainfall-runoff model calculated the peak discharge at the splitter structure and the peak discharges in the by-pass and basin culverts and the required basin volume. The peak discharges were input into a StormCAD model to determine the hydraulic grade line for the storm drain. This HGL confirmed the validity of the depth of discharge in the splitter structure and the rating curves. If the results varied, new culvert sizes and rating curves were developed and the process was iterated.

Some of the steps have been described, but in summary, the iteration process included:

1. Estimating by-pass and basin culvert sizes;
2. Developing rating curves for the by-pass and basin culverts;
3. Input rating curves into HEC-1 diversion routine;
4. Determining peak discharges and flow split in hydraulic splitter structure using HEC-1 based on 1,538 maximum flow in Las Sendas;
5. Developing a StormCAD model to calculate the HGL and using the internal StormCAD diversion routine at the splitter structure;
6. Confirming rating curves based on the HGL across the splitter structure.
7. Revising by-pass and weir culvert sizes and rating curves and iterating.

The by-pass rating curve is in Hydraulics Appendix. StormCAD results including the hydraulic grade line are also in the Hydraulics Appendix with the detailed splitter hydraulics and the basin culvert rating curve.

The storm drain was designed to operate under pressure flow from the outlet at the Las Sendas Channel to the splitter structure and from the splitter structure upstream for several hundred feet. This was done to control the HGL in the splitter structure. A controlled HGL in the splitter structure will regulate the flow to the by-pass and the basin to ensure that the maximum flow in the Las Sendas channel is 1538 cfs. In StormCAD, the splitter structure was treated as a complex manhole with a bend. The head loss through a manhole with a bend is a function of the velocity head. A loss coefficient of 0.35 was used to calculate the losses across the structure. Based on the loss through the splitter structure the HGL across the splitter structure was averaged and that HGL was used to confirm the rating curves developed for the HEC-1 analysis. **Table 7** shows the

final elevations of the splitter components. Note that a discharge of 331 cfs will be flowing in the by-pass culvert before any discharge flows over the weir and into the basin.

Table7. Splitter Elevation Data.

Splitter Component	Elevation (ft)
HGL at Entrance to Splitter	1647.1
HGL at Exit to 7X4 RCBC	1646.0
Average HGL	1646.6
Splitter Floor Elevation	1635.4
Total Depth in Splitter and Head on 7-Foot Span by 4-Foot Rise RCBC By-Pass (ft)	11.2
Weir Crest Elevation	1643.5
Total Head on Basin Culvert	3.1

D. Other Junction Structures

Junction Structure No. 1 will be the transition between the 7-foot span by 4-foot rise RCBC and the twin 54-inch diameter reinforced concrete pipes. The RCBC will convey the storm runoff under the existing Sossaman Road sanitary sewer.

Junction Structures No. 3 and No. 4 are both structures that angle the storm drain by nearly 90 degrees. Junction structure No. 3 turns the flow south along Hawes Road. Junction Structure No. 4 turns the flow west along McDowell Road.

E. By-Pass Culvert

The by-pass culvert is a single barrel 7-foot span by 4-foot rise reinforced concrete box culvert that will operate with a total head of 11.2 feet, which is the depth of water in the splitter structure. The by-pass culvert transitions from a box section to a double 54-inch diameter RCP on the north side of McDowell Road in the west bound traffic lanes of McDowell Road. The rating curve for the by-pass culvert was developed using the orifice equation.

The By-pass culvert outlet will be an impact wall type energy dissipater. This structure is being placed at the outfall of the storm drain to dissipate energy to prevent damage to the Las Sendas channel. This structure will ensure the non-scouring velocities at the outlet. The structure was sized according to standards developed by the US Bureau of Reclamation.

F. Detention Basin Culvert

The detention basin culvert consists of three 42-inch diameter RCP's designed to go under the 18-inch diameter sewer line that runs north and south along McDowell Road. To ensure clearance over the sewer line, the invert of the basin culvert is 1643.5 and depth of flow in the culvert of 3.2 feet that is based on the HGL in the splitter structure. The culvert is 185 feet long (three barrels = 555 feet). The slope of the culvert is 2.65 %. The rating curve for the basin culvert was developed using the weir equation and was confirmed with HY-8 and StormCAD.

The basin outlet culvert is a 48-inch diameter RCP with a 41-inch diameter restrictor plate. The restrictor plate is necessary to limit the flow in the Las Sendas to below 1540 cfs. This culvert will meter out flow in the basin to the Las Sendas Channel. The culvert will have typical headwalls with a riprap apron on the downstream end to prevent erosion. The culvert was designed using HY-8 and the details can be found in the Hydraulics Appendix.

G. Inlets

Thunder Mountain Inlet

The peak discharge rate at the Thunder Mountain detention basin is 519 cfs. The inlet was size to accept this peak inflow rate. The inlet is design to flow under a weir flow condition with a maximum head of two feet on the sides of the structure, which act as the weir. The invert elevation of the inlet will be set 6-inches above the existing ground in the basin. This will prevent sediment in the basin from being transported into the storm drain system. The maximum depth of flow (two feet) over the sides of the inlet is 6-inches below the invert of the wall openings that are in the wall around the basin site, essentially giving the basin 6-inches of freeboard depth before any flow would exit the wall openings.

Storm Drain Inlets and Cross Culverts

There are 11 storm drain inlets excluding the Thunder Mountain Inlet. The general layout of the storm drain inlet and cross culvert configuration is on Plan Sheet 40 of 55. The concept is that the initial low flows from the upstream watershed will flow through the 18-inch diameter cross culverts to maintain the vegetation in the small finger washes south of McDowell Road. The invert of the inlets is designed to be set 6-inches above the invert of the cross culverts. Larger flows will flow up into the inlets and into the storm drain system. The inlets were sized assuming full head on the grate and will be under orifice flow. The grates were designed with a 50% clogging factor. The 18-inch diameter cross culverts were set a minimum slope to cross the road with at least two feet of cover.

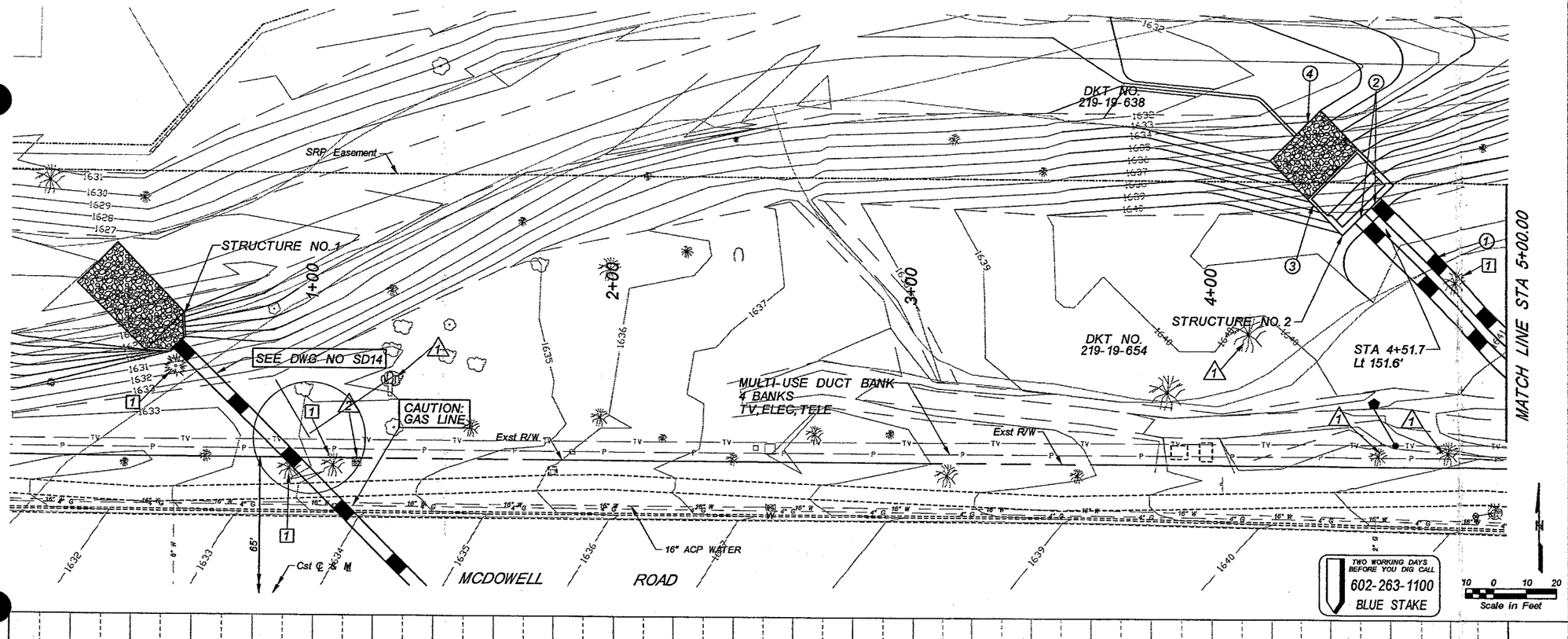

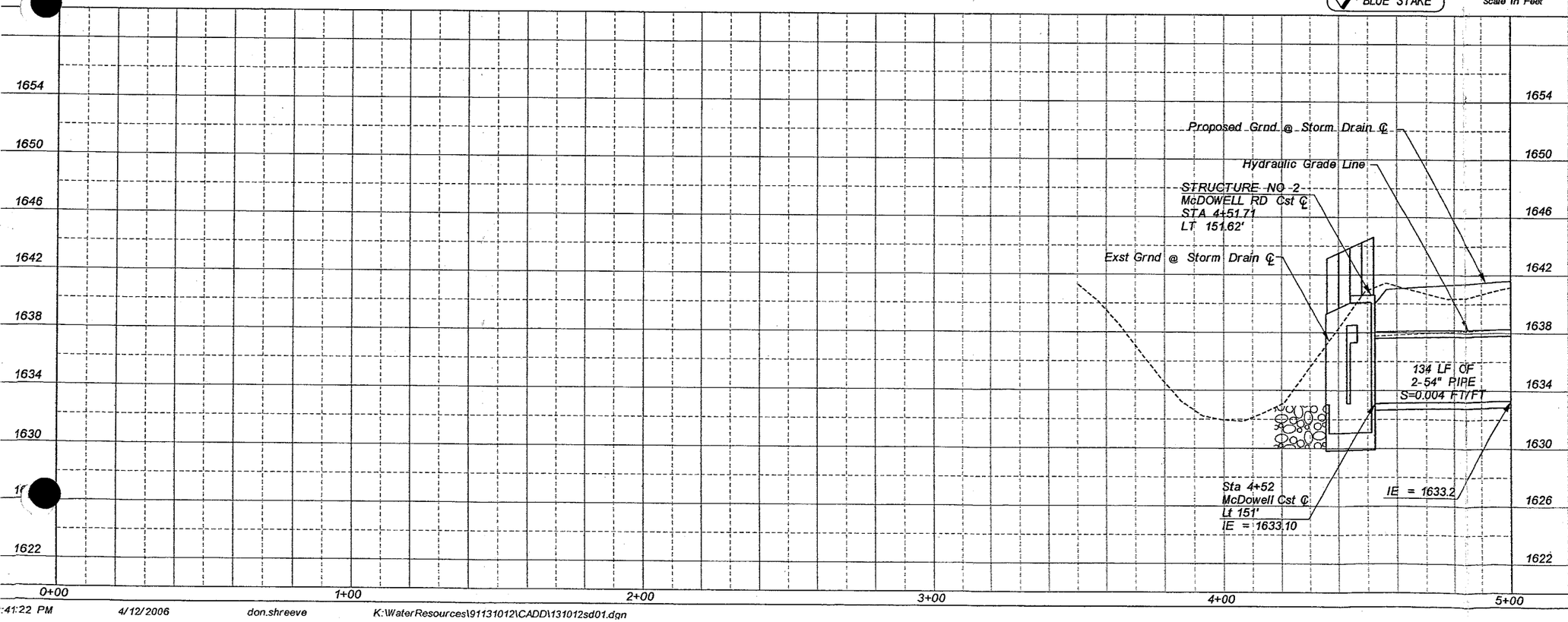

☐ REMOVE ☐

1 REMOVE EXISTING VEGETATION (NPI)

◯ CONSTRUCT ◯

INSTALL NEW STORM DRAIN PIPE

NO.	STATION TO STATION	DIAMETER INCHES	LENGTH FEET
1	4+30.5 - 5+00 CLASS III	2-54"	134

2	INSTALL 54" STORM DRAIN ACCESS BARRIER PER COP DETAIL PP-1563	2 EA
3	CONSTRUCT STRUCTURE NO. 2 SEE DETAIL ST2	1 EA
4	CONSTRUCT RIP-RAP TYPE _ EROSION BLANKET	48 SY
5	STEEL HANDRAIL	92 LF

1 PROTECT IN PLACE VEGETATION (NPI)

2 PROTECT IN PLACE (NPI)

PAVEMENT REMOVAL AND REPLACEMENT SEE SHEETS RD1-RD5

● INDICATES POTHOLE LOCATION

■ INDICATES POTHOLE ELEVATION

NO.	REVISION	BY	DATE
3			
2			
1			

FLOOD CONTROL DISTRICT OF MARICOPA COUNTY
ENGINEERING DIVISION

MCDOWELL ROAD BASIN AND STORM DRAIN DESIGN
PCN 420.03.31

90%
PRELIMINARY NOT FOR CONSTRUCTION

	BY	DATE
DESIGNED	DEJ/JWH	04/07/06
DRAWN	DKS/JWH	04/07/06
CHECKED	RAE	04/07/06

Kimley-Horn and Associates, Inc.

DRAWING NO. SD1

PLAN AND PROFILE SHEET STA 0+00 TO STA 5+00

SHEET 13 OF 73

:41:22 PM 4/12/2006 don.shreeve K:\WaterResources\91131012\CADD\131012sd01.dgn

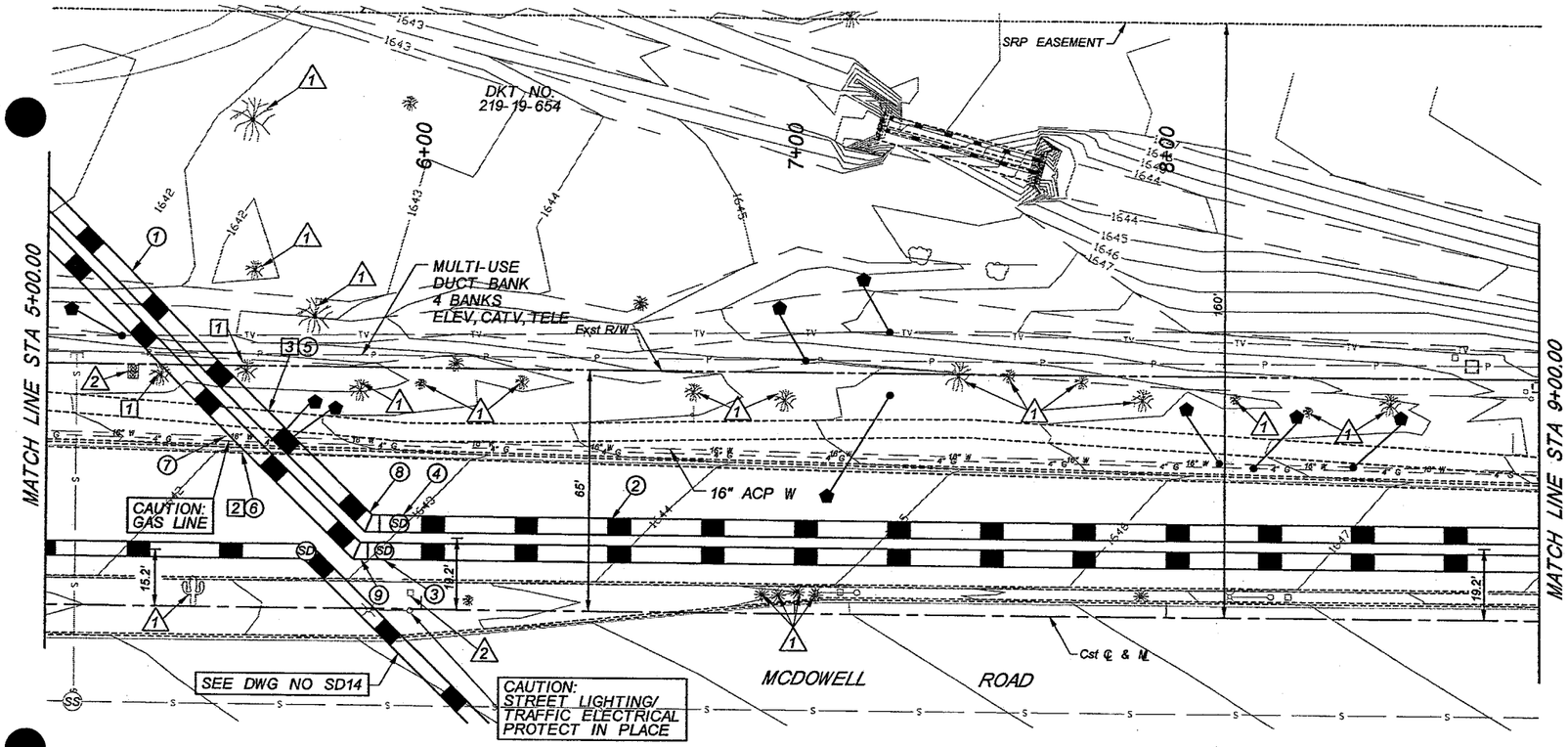

TWO WORKING DAYS BEFORE YOU DIG CALL
602-263-1100
BLUE STAKE

Scale in Feet: 10 0 10 20

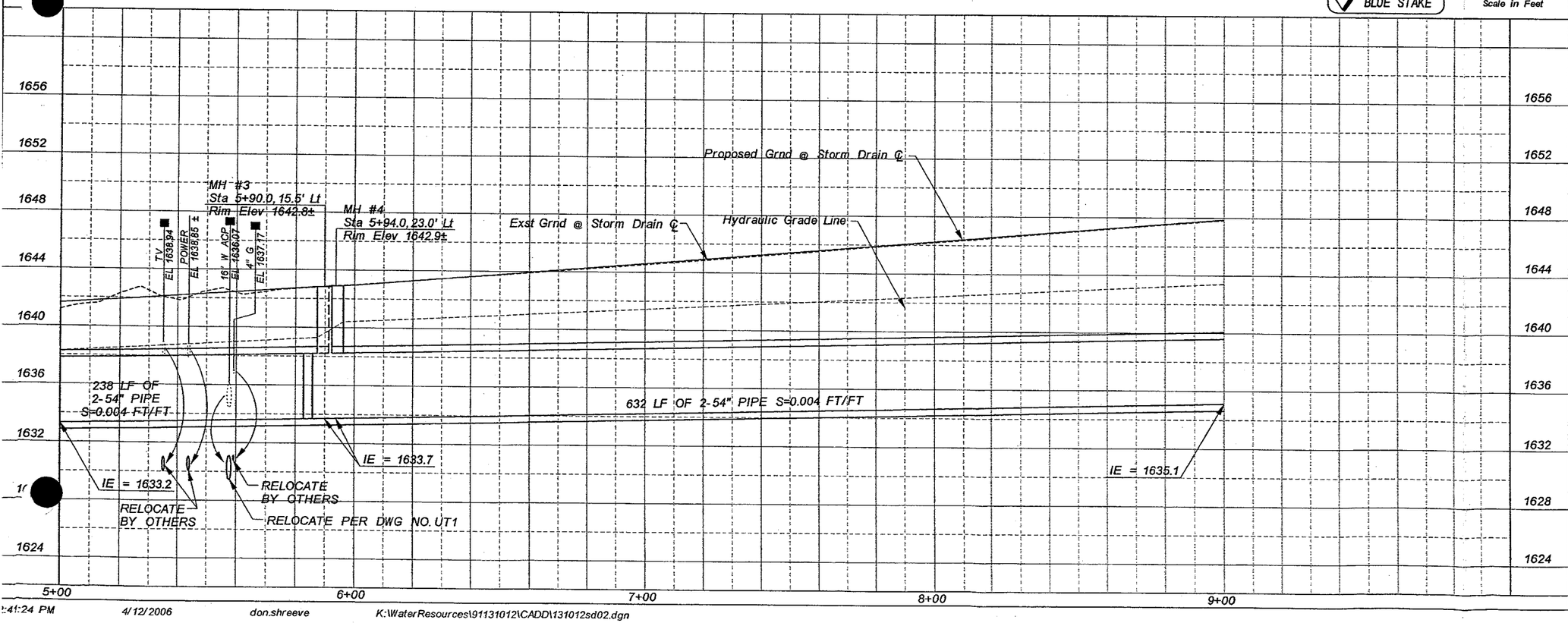

REMOVE

1. REMOVE EXISTING VEGETATION (NPI)
2. REMOVE EXISTING CURB AND GUTTER 21 LF
3. REMOVE EXISTING SIDEWALK 11.5 SY

CONSTRUCT

INSTALL NEW STORM DRAIN PIPE

NO.	STATION TO STATION	DIAMETER INCHES	LENGTH FEET
1	5+00 - 5+85	2-54	238
2	5+85 - 9+00	2-54	632

INSTALL NEW 5' DIA STORM DRAIN MANHOLE

NO.	STATION	BASE DETAIL	SHAFT DETAIL
3	5+90.0, 15.5' Lt MH NO 3	521	522
4	5+94.0, 23.0' Lt MH NO 4	521	522

5. CONSTRUCT NEW SIDEWALK PER MAG STD DET 230 11.5 SY
6. CONSTRUCT NEW CURB & GUTTER PER MAG STD DET 220, TYPE A 21 LF
7. RELOCATE 16" WATERLINE PER DETAIL UT1 38 LF

INSTALL NEW PREFABRICATED FITTING

NO.	STATION	SIZE
8	5+82.7, 15.5' Lt	54"X54"X45° BEND
9	5+85.8, 22.9' Lt	54"X54"X45° BEND

1. PROTECT IN PLACE VEGETATION (NPI)
2. PROTECT IN PLACE (NPI)

PAVEMENT REMOVAL AND REPLACEMENT SEE SHEETS RD1-RD5

⬟ INDICATES POTHOLE LOCATION
■ INDICATES POTHOLE ELEVATION

NO.	REVISION	BY	DATE
3			
2			
1			

FLOOD CONTROL DISTRICT OF MARICOPA COUNTY
ENGINEERING DIVISION

MCDOWELL ROAD BASIN AND STORM DRAIN DESIGN
PCN 420.03.31

90%
PRELIMINARY NOT FOR CONSTRUCTION

	BY	DATE
DESIGNED	DEJ/JWH	04/07/06
DRAWN	DKS/JWH	04/07/06
CHECKED	RAE	04/07/06

Kimley-Horn and Associates, Inc.

DRAWING NO. SD2

PLAN AND PROFILE SHEET STA 5+00 TO STA 9+00

SHEET 14 OF 73

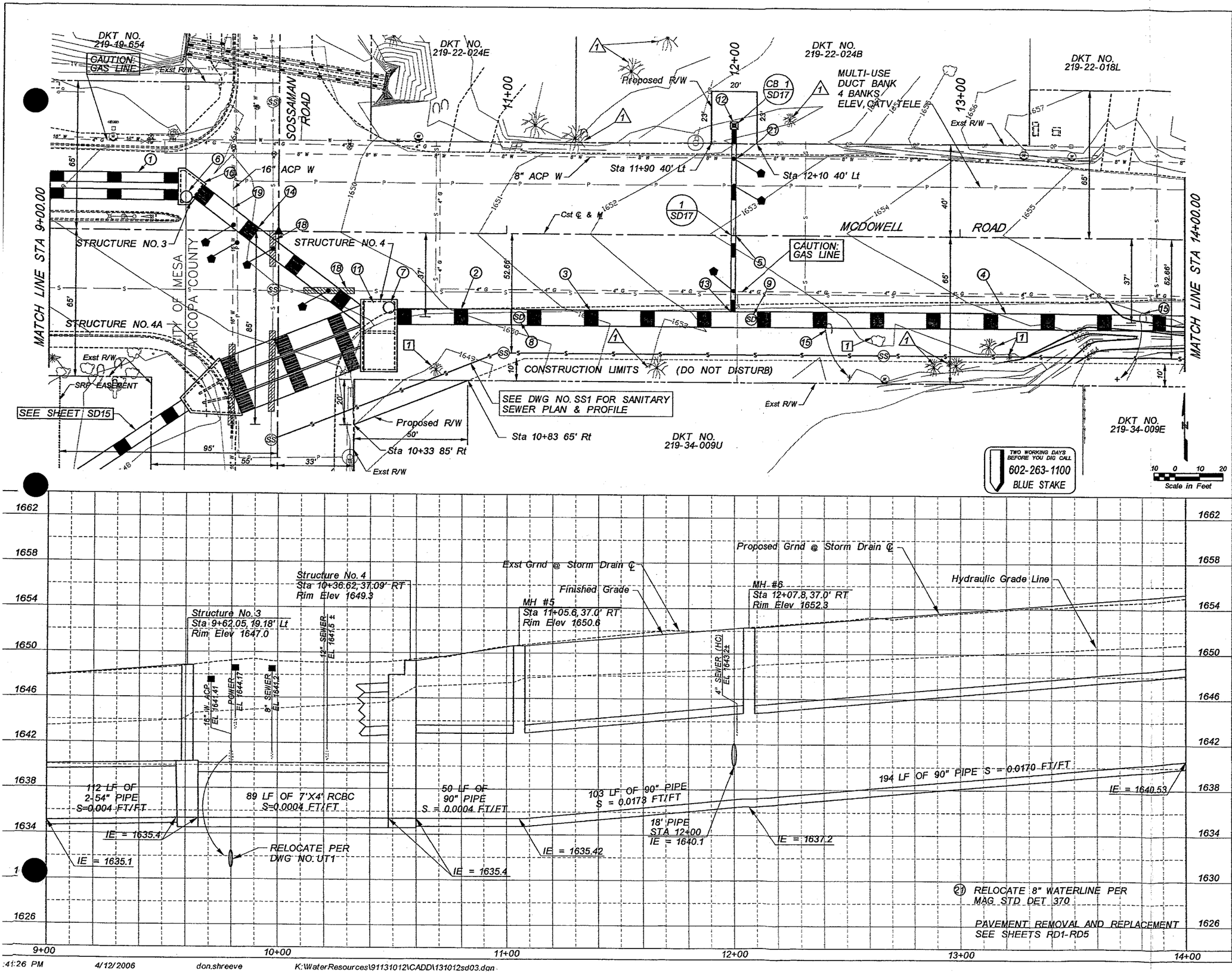

☐ REMOVE ☐

1 REMOVE EXISTING VEGETATION (NPI)

○ CONSTRUCT ○

INSTALL NEW STORM DRAIN PIPE

NO.	STATION TO STATION	DIAMETER INCHES	LENGTH FEET
1	9+00 - 9+60.9	2-54	112
2	10+44.4 - 11+05.5	90	50
3	11+05.5 - 11+98.5	90	103
4	11+98.5 - 14+00	90	194
5	12+00 (37' RT - 50' LT)	18	80

INSTALL NEW 5' DIA STORM DRAIN MANHOLE

NO.	STATION	BASE DETAIL	SHAFT DETAIL
6	9+59.6	STRUCTURE NO 3	522
7	10+48.3	STRUCTURE NO 4	522
8	11+05.6 MH5	521	522
9	12+07.8 MH6	521	522

10 CONSTRUCT STRUCTURE NO. 3 SEE DETAIL ST4 — 1 EA

11 CONSTRUCT STRUCTURE NO. 4 SEE DETAIL ST6 — 1 EA

12 CONSTRUCT CONCRETE CATCH BASIN PER MAG STD DET 537 — 1 EA

INSTALL NEW PREFABRICATED FITTING

NO.	STATION	SIZE
13	12+00	90" X 90" X 18" TEE

INSTALL NEW RCBC

NO.	STATION	WIDTH HEIGHT	LENGTH FEET
14	9+60.9 - 10+44.4	7' X 4'	89

15 SALVAGE AND RELOCATE

18 INSTALL ENCASEMENT PER MAG STD DET 404-3 — 30 LF

19 RELOCATE 16" WATERLINE PER DETAIL UT1 — 29 LF

1 PROTECT IN PLACE VEGETATION (NPI)

● INDICATES POTHOLE LOCATION

■ INDICATES POTHOLE ELEVATION

NO.	REVISION	BY	DATE
3			
2			
1			

FLOOD CONTROL DISTRICT OF MARICOPA COUNTY
ENGINEERING DIVISION

MCDOWELL ROAD BASIN AND STORM DRAIN DESIGN
PCN 420.03.31

90%
PRELIMINARY NOT FOR CONSTRUCTION

	BY	DATE
DESIGNED	DEJ/JWH	04/07/06
DRAWN	DKS/JWH	04/07/06
CHECKED	RAE	04/07/06

Kimley-Horn and Associates, Inc.

DRAWING NO. SD3

PLAN AND PROFILE SHEET STA 9+00 TO STA 14+00

SHEET 15 OF 73

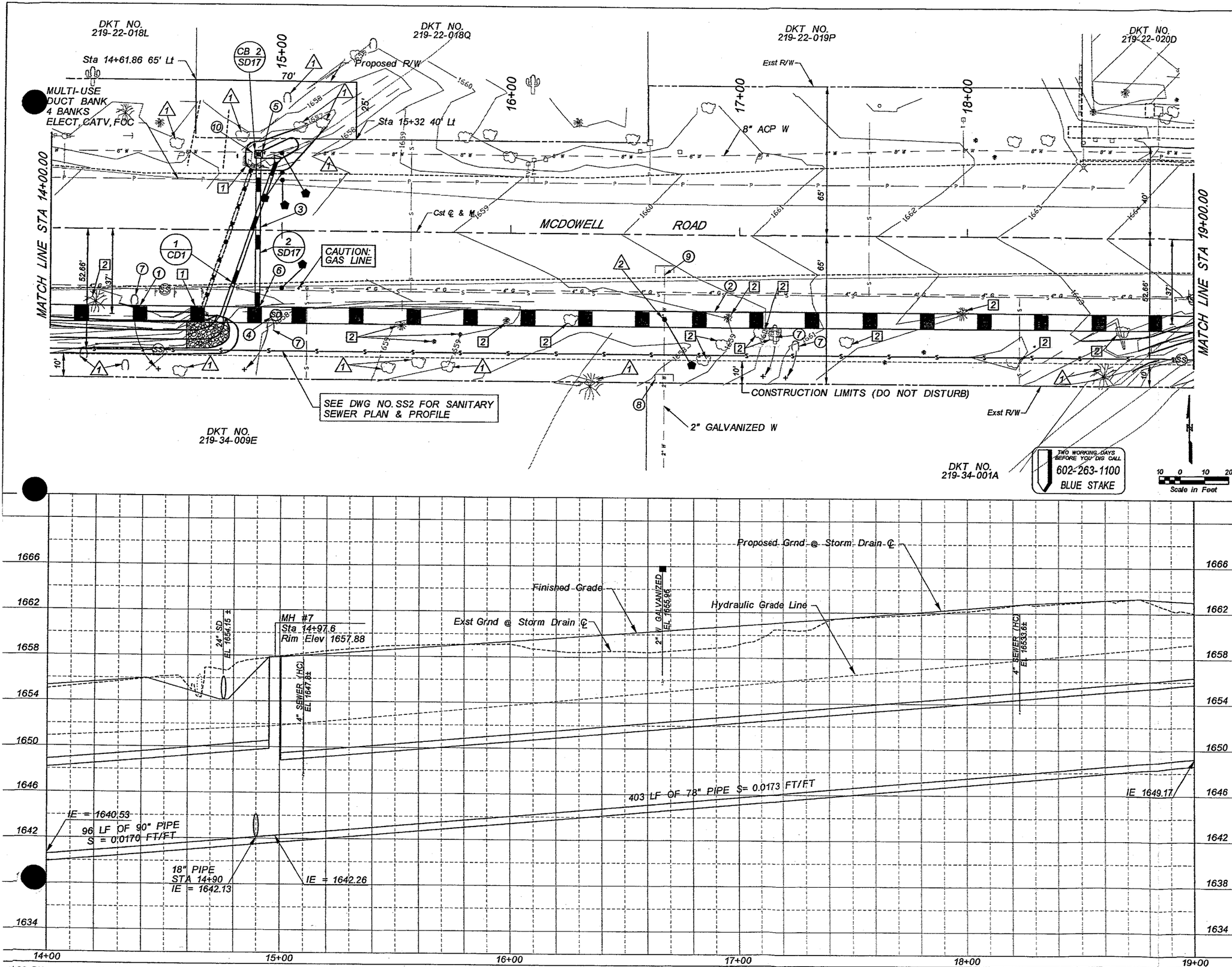

REMOVE

1. REMOVE EXISTING HEADWALLS — 2 EA
2. REMOVE EXISTING VEGETATION (NPI)

CONSTRUCT

INSTALL NEW STORM DRAIN PIPE

NO.	STATION TO STATION	DIAMETER INCHES	LENGTH FEET
1	14+00 - 14+79.5	90	96
2	14+79.5 - 19+00	78	403
3	14+77 (37' RT - 35' LT)	18	65

INSTALL NEW 5' DIA. STORM DRAIN MANHOLE

NO.	STATION	BASE DETAIL	SHAFT DETAIL
4	14+97.6 MH NO 7	521	522

5. CONSTRUCT CONCRETE CATCH BASIN PER MAG STD DET 537 — 1 EA

INSTALL NEW PREFABRICATED FITTING

NO.	STATION	SIZE
6	14+80	90" X 90" X 18" TANGENTIAL TEE

7. SALVAGE AND RELOCATE
8. CAP - 2" GALVANIZED WATER LINE PER MAG STD DET 230 — 1 EA
9. ABANDON 2" WATER LINE
10. RELOCATE 8" WATER LINE PER MAG STD DET 370 — 22 LF
10. RIPRAP — 23 SY

1. PROTECT IN PLACE VEGETATION (NPI)
2. PROTECT IN PLACE (NPI)

PAVEMENT REMOVAL AND REPLACEMENT SEE SHEETS RD1-RD5

- INDICATES POTHOLE LOCATION
- INDICATES POTHOLE ELEVATION

NO.	REVISION	BY	DATE
3			
2			
1			

FLOOD CONTROL DISTRICT OF MARICOPA COUNTY
ENGINEERING DIVISION

MCDOWELL ROAD BASIN AND STORM DRAIN DESIGN
PCN 420.03.31

90%
PRELIMINARY NOT FOR CONSTRUCTION

	BY	DATE
DESIGNED	DEJ/JWH	04/07/06
DRAWN	DKS/JWH	04/07/06
CHECKED	RAE	04/07/06

Kimley-Horn and Associates, Inc.

DRAWING NO. SD4 | PLAN AND PROFILE SHEET STA 14+00 TO STA 19+00 | SHEET 16 OF 73

:41:28 PM 4/12/2006 don.shreeve K:\WaterResources\91131012\CADD\131012sd04.dgn

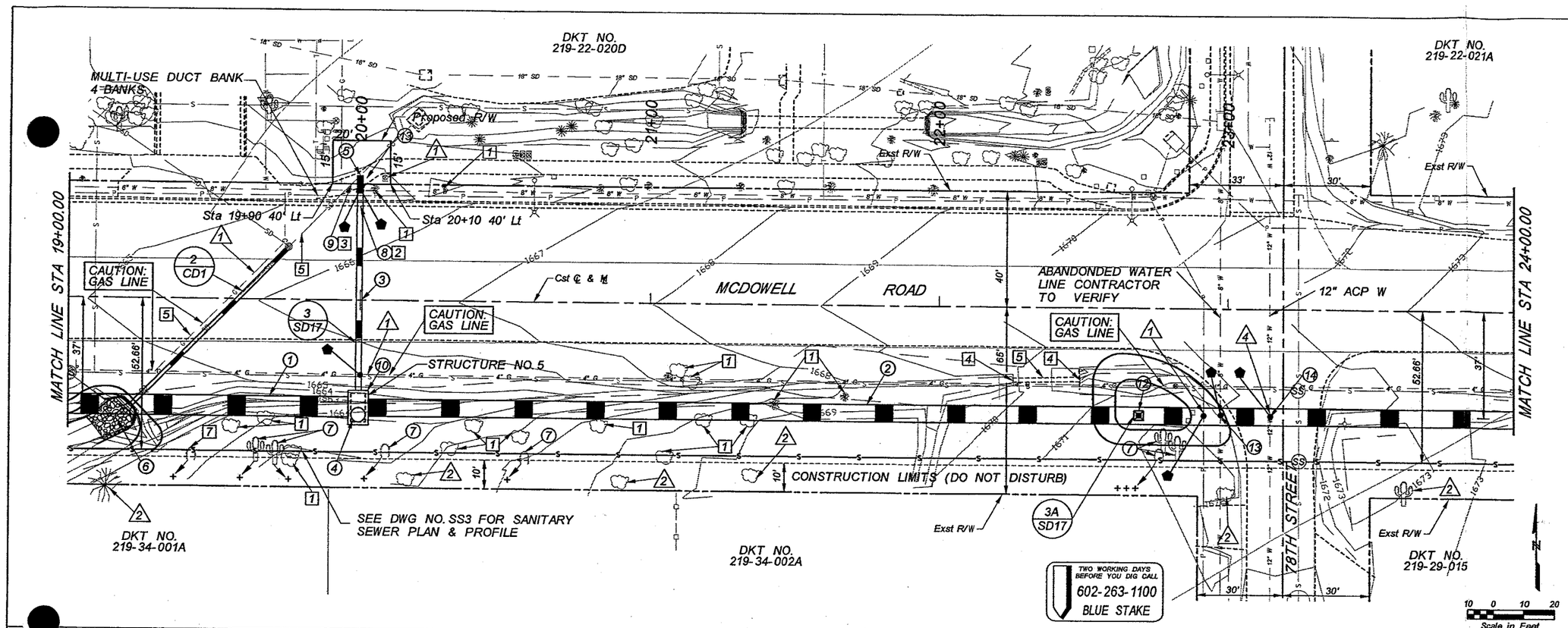

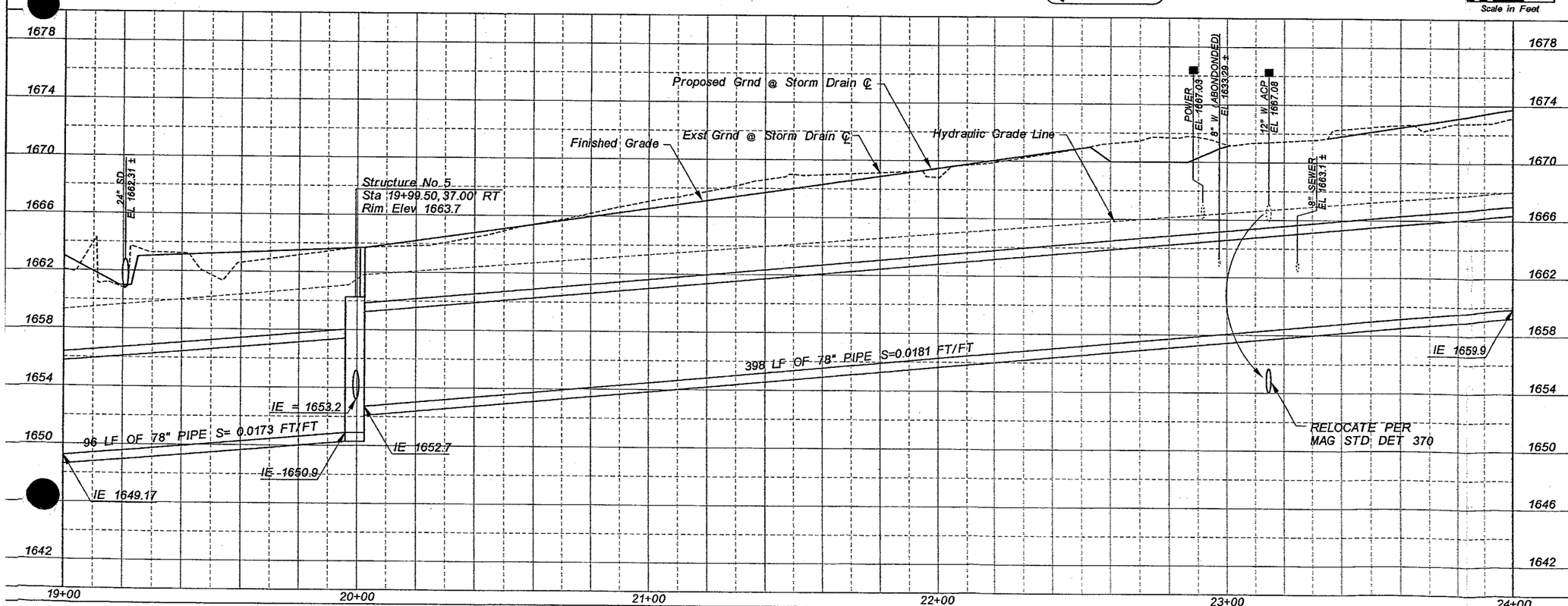

REMOVE

1	REMOVE EXISTING VEGETATION (NPI)	
2	REMOVE EXISTING CURB AND GUTTER	15 LF
3	REMOVE EXISTING SIDEWALK	5.5 SY
4	REMOVE CONCRETE HEADWALL	2 EA
5	REMOVE STORMDRAIN	208 LF

CONSTRUCT

INSTALL NEW STORM DRAIN PIPE

NO.	STATION TO STATION	DIAMETER INCHES	LENGTH FEET
1	19+00 - 19+99.5	78	96
2	19+99.5 - 24+00	78	398
3	20+00 (37' RT - 43' LT)	30	81

INSTALL NEW 5' DIA STORM DRAIN MANHOLE

NO.	STATION	BASE DETAIL	SHAFT DETAIL
4	19+99.5	STRUCTURE NO 5	522

5	CONNECT TO EXISTING STORM DRAIN PER MAG STD DET 524	1 EA
6	RIPRAP	15 SY
7	SALVAGE AND RELOCATE	
8	CONSTRUCT NEW CURB & GUTTER PER MAG STD DET 220, TYPE A	15 LF
9	CONSTRUCT NEW SIDEWALK PER MAG STD DET 230	5.5 SY
10	CONSTRUCT STRUCTURE NO. 5 SEE DETAIL ST7	1 EA
12	CONSTRUCT CONCRETE CATCH BASIN PER MAG STD DET 537	1 EA
13	RELOCATE 8" WATER LINE PER MAG 370	26 LF
14	RELOCATE 12" WATER LINE PER MAG 370	26 LF

1 PROTECT IN PLACE (NPI)

2 PROTECT IN PLACE VEGETATION (NPI)

PAVEMENT REMOVAL AND REPLACEMENT SEE SHEETS RD1-RD5

● INDICATES POTHOLE LOCATION

■ INDICATES POTHOLE ELEVATION

NO.	REVISION	BY	DATE
3			
2			
1			

FLOOD CONTROL DISTRICT OF MARICOPA COUNTY
ENGINEERING DIVISION

MCDOWELL ROAD BASIN AND STORM DRAIN DESIGN
PCN 420.03.31

90%
PRELIMINARY NOT FOR CONSTRUCTION

	BY	DATE
DESIGNED	DEJ/JWH	04/07/06
DRAWN	DKS/JWH	04/07/06
CHECKED	RAE	04/07/06

Kimley-Horn and Associates, Inc.

DRAWING NO.	PLAN AND PROFILE SHEET STA 19+00 TO STA 24+00	SHEET OF
SD5		17 73

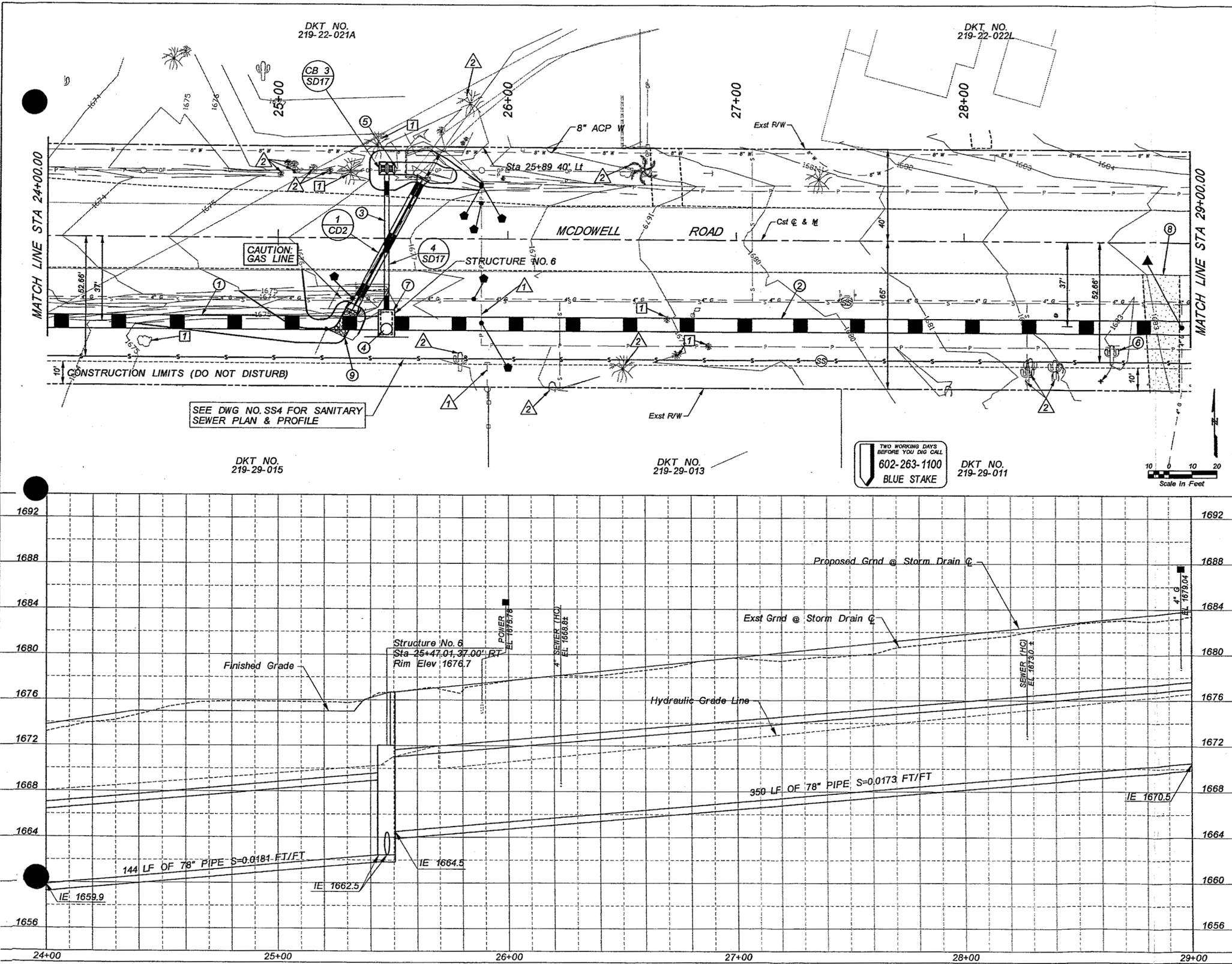

☐ REMOVE ☐

1 REMOVE EXISTING VEGETATION (NPI)

○ CONSTRUCT ○

INSTALL NEW STORM DRAIN PIPE

NO.	STATION TO STATION	DIAMETER INCHES	LENGTH FEET
1	24+00 - 25+48.5	78	144
2	25+48.5 - 29+00	78	350
3	25+48 (37' RT - 27' LT)	30	61

INSTALL NEW 5' DIA STORM DRAIN MANHOLE

NO.	STATION	BASE DETAIL	SHAFT DETAIL
4	25+47.0	STRUCTURE NO 6	522

5	CONSTRUCT CONCRETE CATCH BASIN	2 EA
6	SALVAGE AND RELOCATE	
7	CONSTRUCT STRUCTURE NO. 6 SEE DETAIL ST7	1 EA
8	PAVE DRIVEWAY WITH 4" AB	88 SY
9	RIPRAP	8 SY

1 PROTECT IN PLACE (NPI)

2 PROTECT IN PLACE VEGETATION (NPI)

PAVEMENT REMOVAL AND REPLACEMENT SEE SHEETS RD1-RD5

⬟ INDICATES POTHOLE LOCATION

■ INDICATES POTHOLE ELEVATION

NO.	REVISION	BY	DATE
3			
2			
1			

FLOOD CONTROL DISTRICT OF MARICOPA COUNTY
ENGINEERING DIVISION

MCDOWELL ROAD BASIN AND STORM DRAIN DESIGN
PCN 420.03.31

90%
PRELIMINARY NOT FOR CONSTRUCTION

	BY	DATE
DESIGNED	DEJ/JWH	04/07/06
DRAWN	DKS/JWH	04/07/06
CHECKED	RAE	04/07/06

Kimley-Horn and Associates, Inc.

DRAWING NO.	PLAN AND PROFILE SHEET STA 24+00 TO STA 29+00	SHEET OF
SD6		18 73

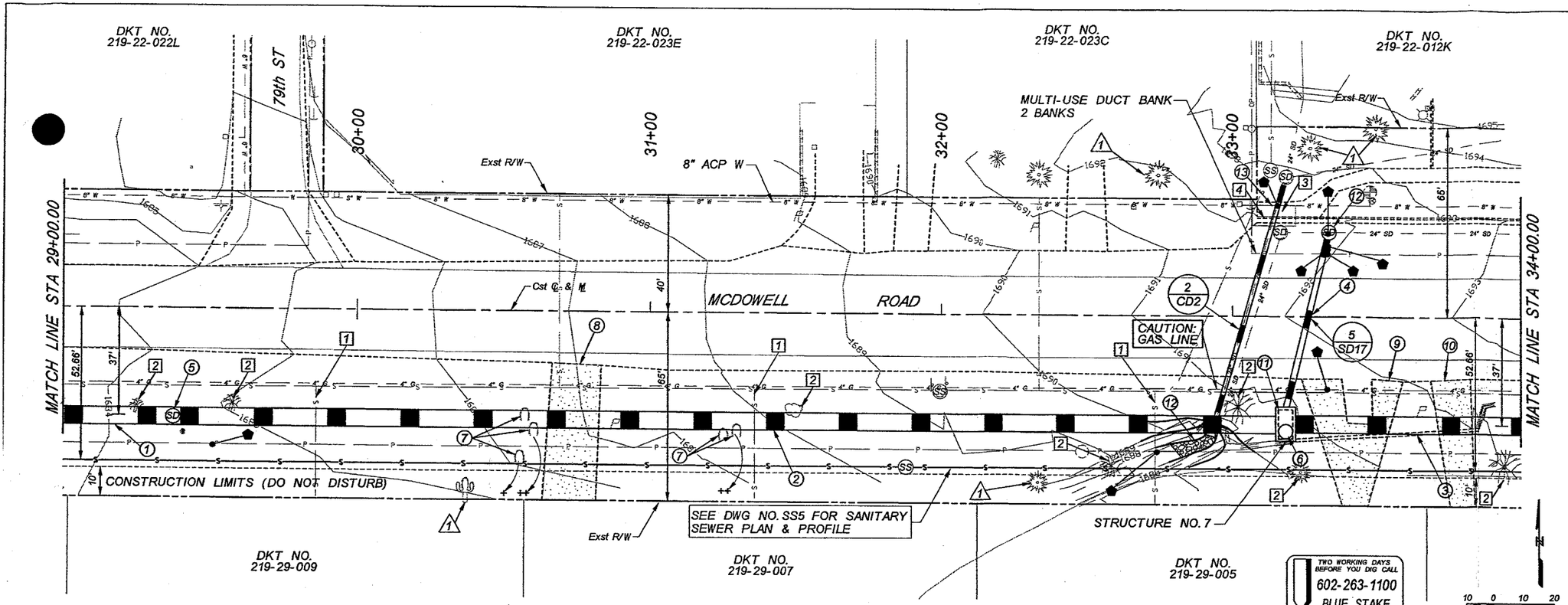

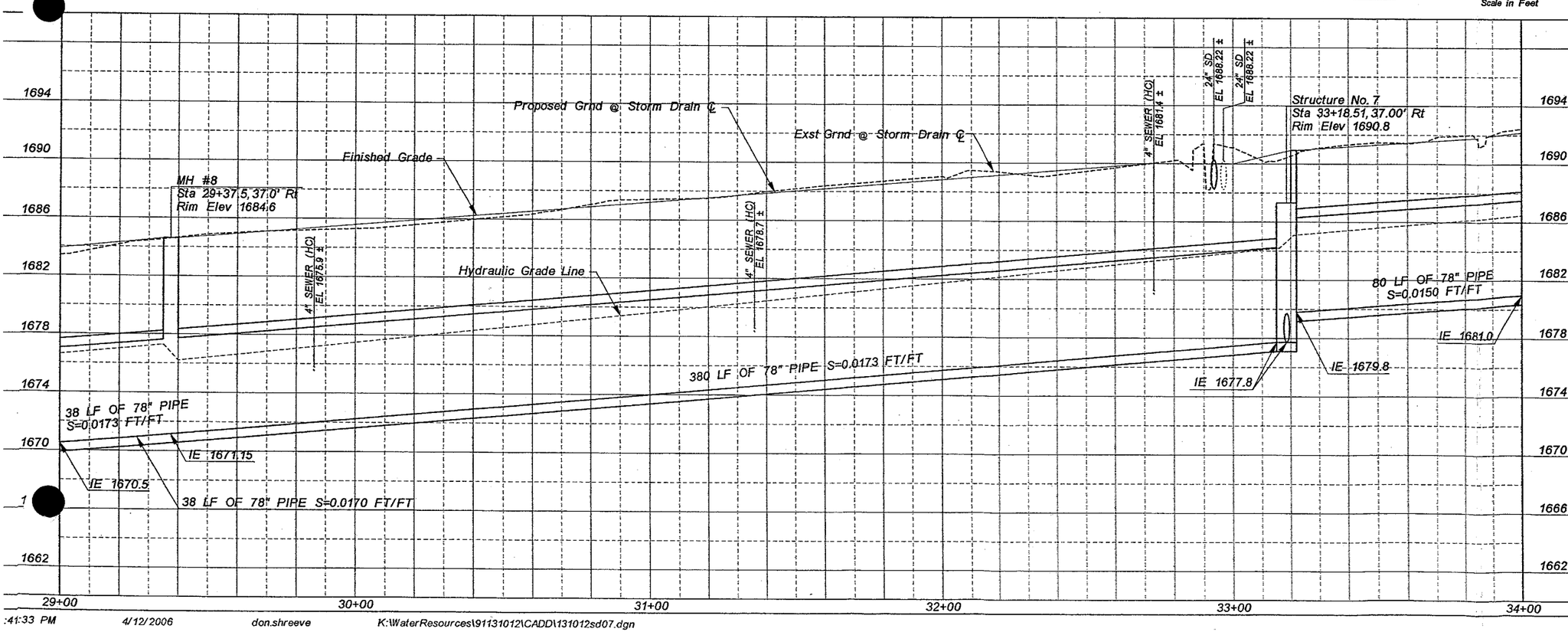

REMOVE

1. REMOVE EXISTING HOUSEHOLD SEWER CONNECTION
2. REMOVE EXISTING VEGETATION (NPI)
3. REMOVE SIDEWALK — 10 SY
4. REMOVE CURB AND GUTTER — 17 LF

CONSTRUCT

INSTALL NEW STORM DRAIN PIPE

NO.	STATION TO STATION	DIAMETER INCHES	LENGTH FEET
1	29+00 - 29+37.5	78	38
2	29+37.5 - 33+18.5	78	380
3	33+18.5 - 34+00	78	80
4	33+26 (37' RT - 29' LT)	24	63

INSTALL NEW 5' DIA STORM DRAIN MANHOLE

NO.	STATION	BASE DETAIL	SHAFT DETAIL
5	29+37.5	521	522
6	33+18.5	STRUCTURE NO 7	522
12	33+32.9	521	522

7. SALVAGE AND RELOCATE
8. PAVE DRIVEWAY WITH 4" AB — 90 SY
9. PAVE DRIVEWAY WITH 4" AB — 89 SY
10. PAVE DRIVEWAY WITH 4" AB — 55 SY
11. CONSTRUCT STRUCTURE NO. 7 SEE DETAIL ST7 — 1 EA
12. RIPRAP — 7 SY
11. SIDEWALK — 10 SY
12. CURB AND GUTTER — 17 LF
13. RELOCATE PER MAG 370 — 20 LF

1. PROTECT IN PLACE VEGETATION (NPI)
2. PROTECT IN PLACE (NPI)

PAVEMENT REMOVAL AND REPLACEMENT SEE SHEETS RD1-RD5

INDICATES POTHOLE LOCATION
INDICATES POTHOLE ELEVATION

NO.	REVISION	BY	DATE
3			
2			
1			

FLOOD CONTROL DISTRICT OF MARICOPA COUNTY
ENGINEERING DIVISION

MCDOWELL ROAD BASIN AND STORM DRAIN DESIGN
PCN 420.03.31

90%
PRELIMINARY NOT FOR CONSTRUCTION

	BY	DATE
DESIGNED	DEJ/JWH	04/07/06
DRAWN	DKS/JWH	04/07/06
CHECKED	RAE	04/07/06

Kimley-Horn and Associates, Inc.

DRAWING NO. SD7
PLAN AND PROFILE SHEET STA 29+00 TO STA 34+00
SHEET 19 OF 73

:41:33 PM 4/12/2006 don.shreeve K:\WaterResources\91131012\CADD\131012sd07.dgn

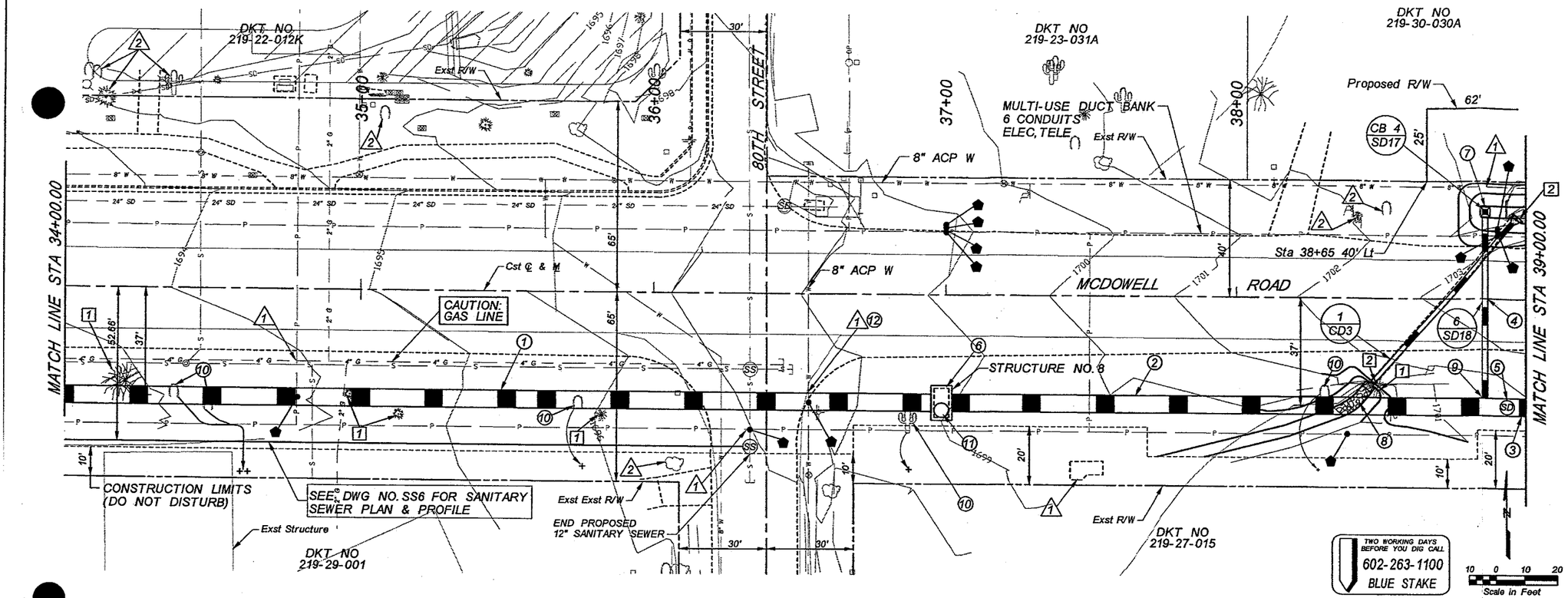

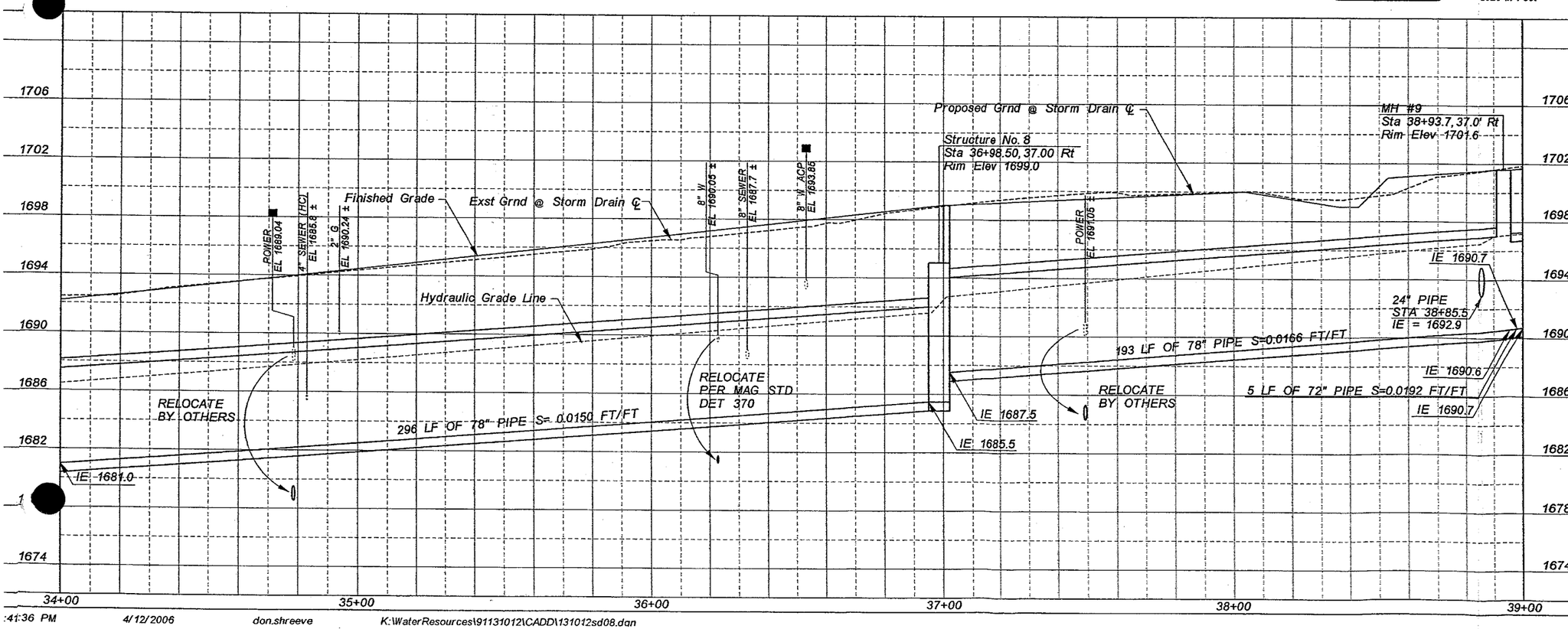

☐ REMOVE ☐

1	REMOVE EXISTING VEGETATION (NPI)	
2	REMOVE HEADWALL	2 EA

○ CONSTRUCT ○

INSTALL NEW STORM DRAIN PIPE

NO.	STATION TO STATION	DIAMETER INCHES	LENGTH FEET
1	34+00 - 36+98.5	78	296
2	36+98.5 - 38+87.5	78	193
3	38+87.5 - 39+00	72	5
4	38+86.5 (37' RT - 32' LT)	24	62

INSTALL NEW 5' DIA STORM DRAIN MANHOLE

NO.	STATION	BASE DETAIL	SHAFT DETAIL
5	38+93.7 MH 9	521	522
11	36+98.5	STRUCTURE NO 8	522

6	CONSTRUCT STRUCTURE NO. 8 SEE DETAIL ST7	1 EA
7	CONSTRUCT CONCRETE CATCH BASIN PER MAG STD DET 537	1 EA
8	RIPRAP	6 SY

INSTALL NEW PREFABRICATED FITTING

NO.	STATION	SIZE
9	38+85.5	78" X 78" X 24" TEE

10	SALVAGE AND RELOCATE	
12	REMOVE 8" ACP WATER LINE AND REPLACE WITH 8" DIP PER MAG STD DET 403-3. SEE SPECIFICATIONS FOR COORDINATING WATERLINE CONSTRUCTION WITH CITY OF MESA	19 LF

1 PROTECT IN PLACE (NPI)

2 PROTECT IN PLACE VEGETATION (NPI)

PAVEMENT REMOVAL AND REPLACEMENT SEE SHEETS RD1-RD5

⬟ INDICATES POTHOLE LOCATION

■ INDICATES POTHOLE ELEVATION

NO.	REVISION	BY	DATE
3			
2			
1			

FLOOD CONTROL DISTRICT OF MARICOPA COUNTY
ENGINEERING DIVISION

MCDOWELL ROAD BASIN AND STORM DRAIN DESIGN
PCN 420.03.31

90%
PRELIMINARY NOT FOR CONSTRUCTION

	BY	DATE
DESIGNED	DEJ/JWH	04/07/06
DRAWN	DKS/JWH	04/07/06
CHECKED	RAE	04/07/06

Kimley-Horn and Associates, Inc.

DRAWING NO.	PLAN AND PROFILE SHEET STA 34+00 TO STA 39+00	SHEET OF
SD8		20 73

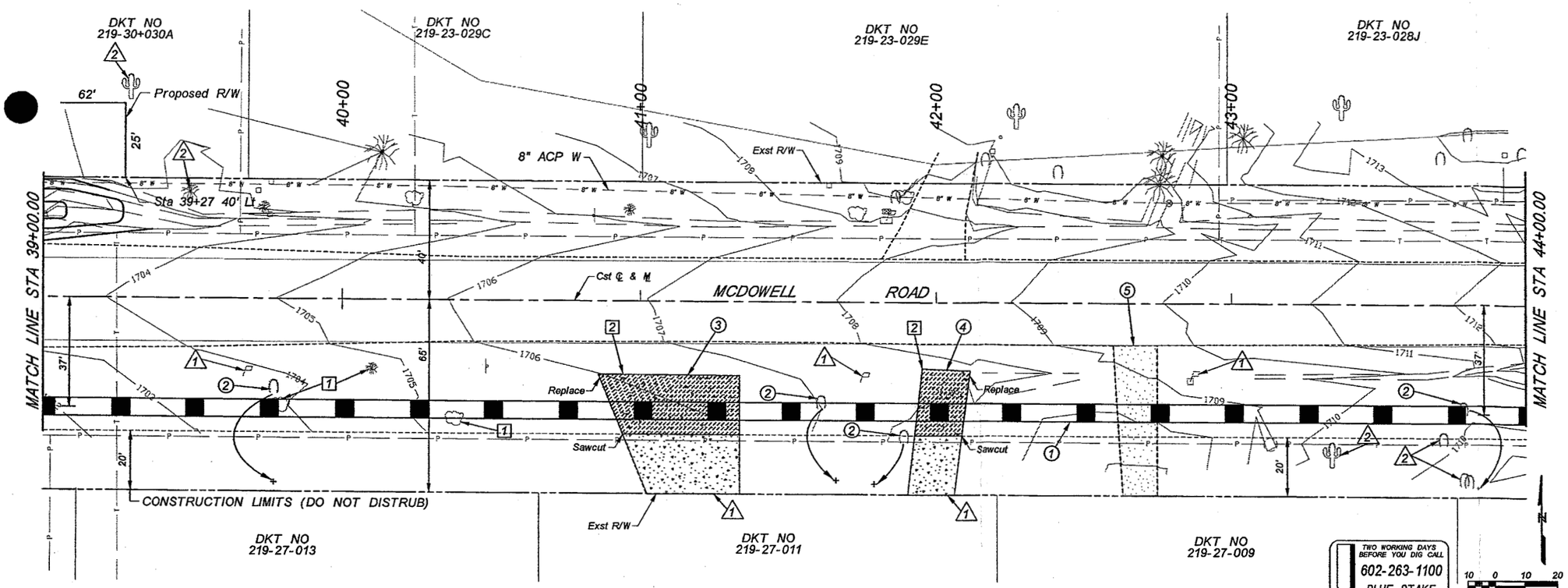

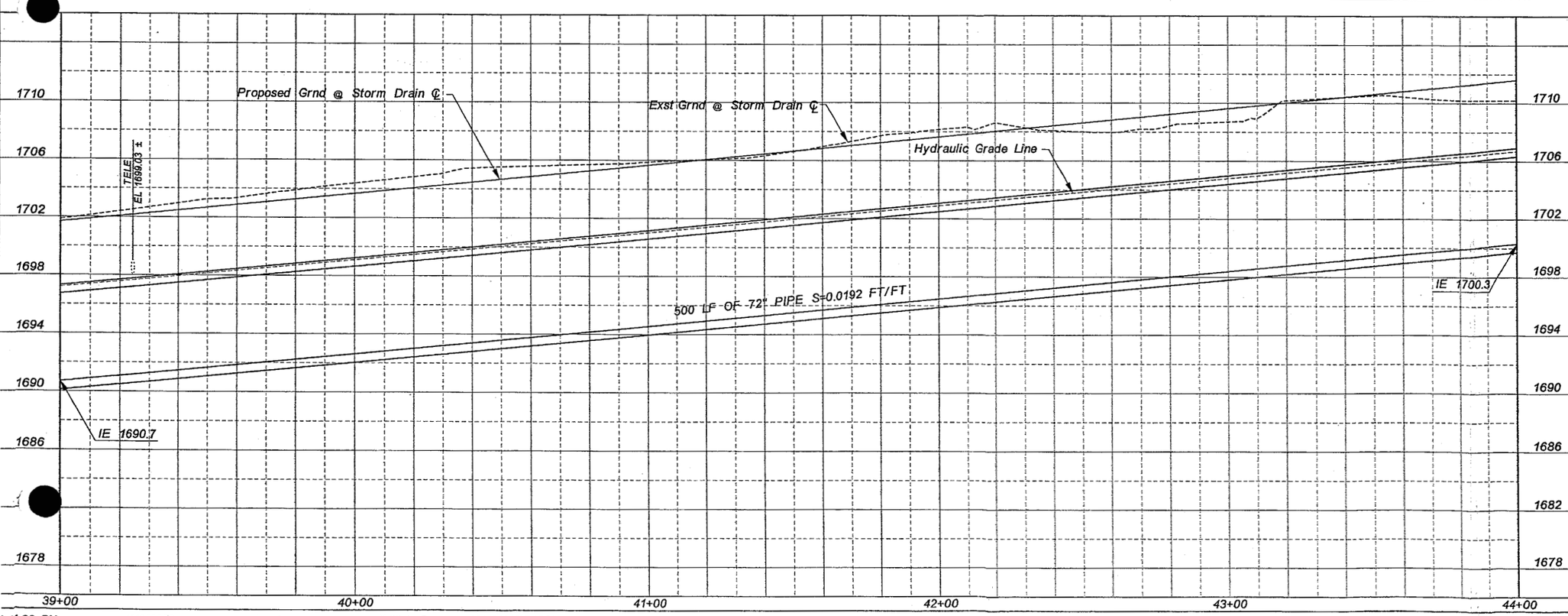

☐ REMOVE ☐

1. REMOVE EXISTING VEGETATION (NPI)
2. REMOVE EXISTING DRIVEWAY 138 SY

○ CONSTRUCT ○

INSTALL NEW STORM DRAIN PIPE

NO.	STATION TO STATION	DIAMETER INCHES	LENGTH FEET
1	39+00 - 44+00	72	500

2. SALVAGE AND RELOCATE
3. REPLACE DRIVEWAY WITH CONCRETE 98 SY
4. REPLACE DRIVEWAY WITH CONCRETE 40 SY
5. PAVE DRIVEWAY WITH 4" AB 75 SY

△1 PROTECT IN PLACE (NPI)
△2 PROTECT IN PLACE VEGETATION (NPI)

PAVEMENT REMOVAL AND REPLACEMENT
SEE SHEETS RD1-RD5

⬟ INDICATES POTHOLE LOCATION
■ INDICATES POTHOLE ELEVATION

NO.	REVISION	BY	DATE
3			
2			
1			

FLOOD CONTROL DISTRICT OF MARICOPA COUNTY
ENGINEERING DIVISION

MCDOWELL ROAD BASIN
AND STORM DRAIN DESIGN
PCN 420.03.31

90%
PRELIMINARY NOT FOR CONSTRUCTION

	BY	DATE
DESIGNED	DEJ/JWH	04/07/06
DRAWN	DKS/JWH	04/07/06
CHECKED	RAE	04/07/06

Kimley-Horn and Associates, Inc.

DRAWING NO.	PLAN AND PROFILE SHEET STA 39+00 TO STA 44+00	SHEET OF
SD9		21 73

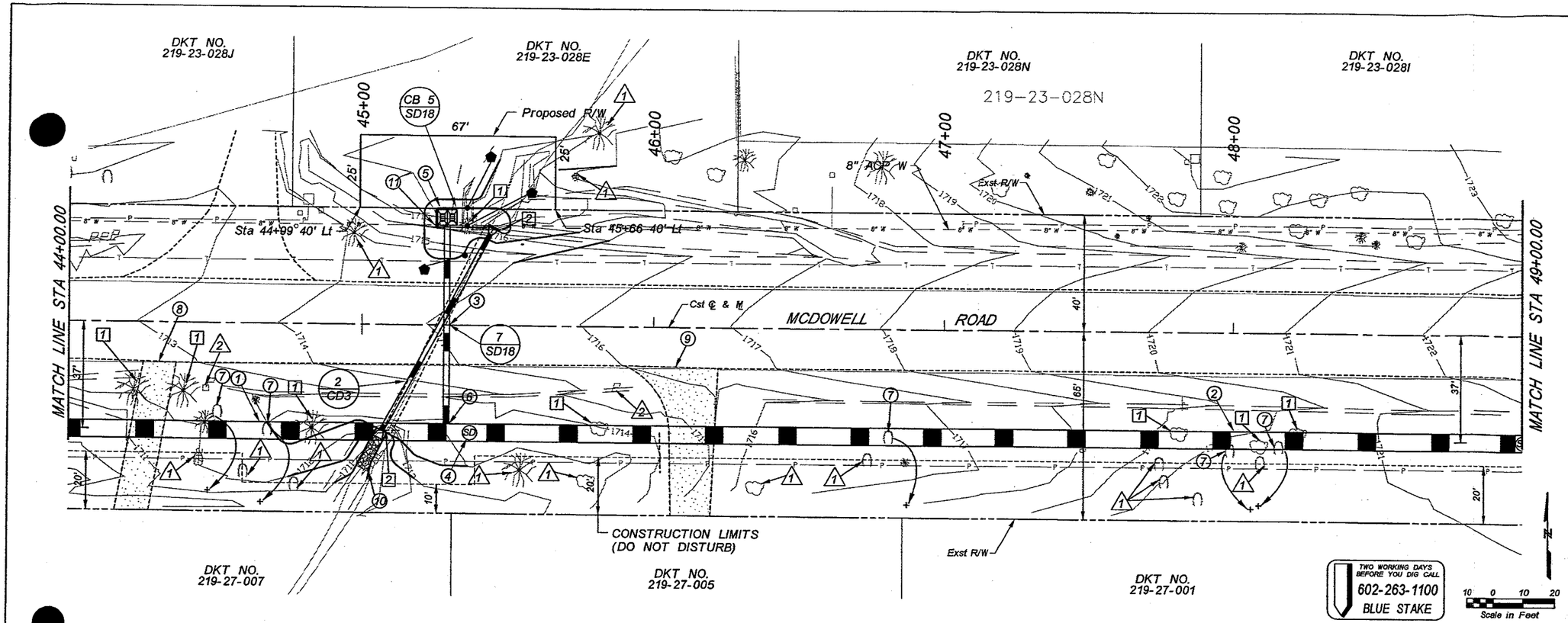

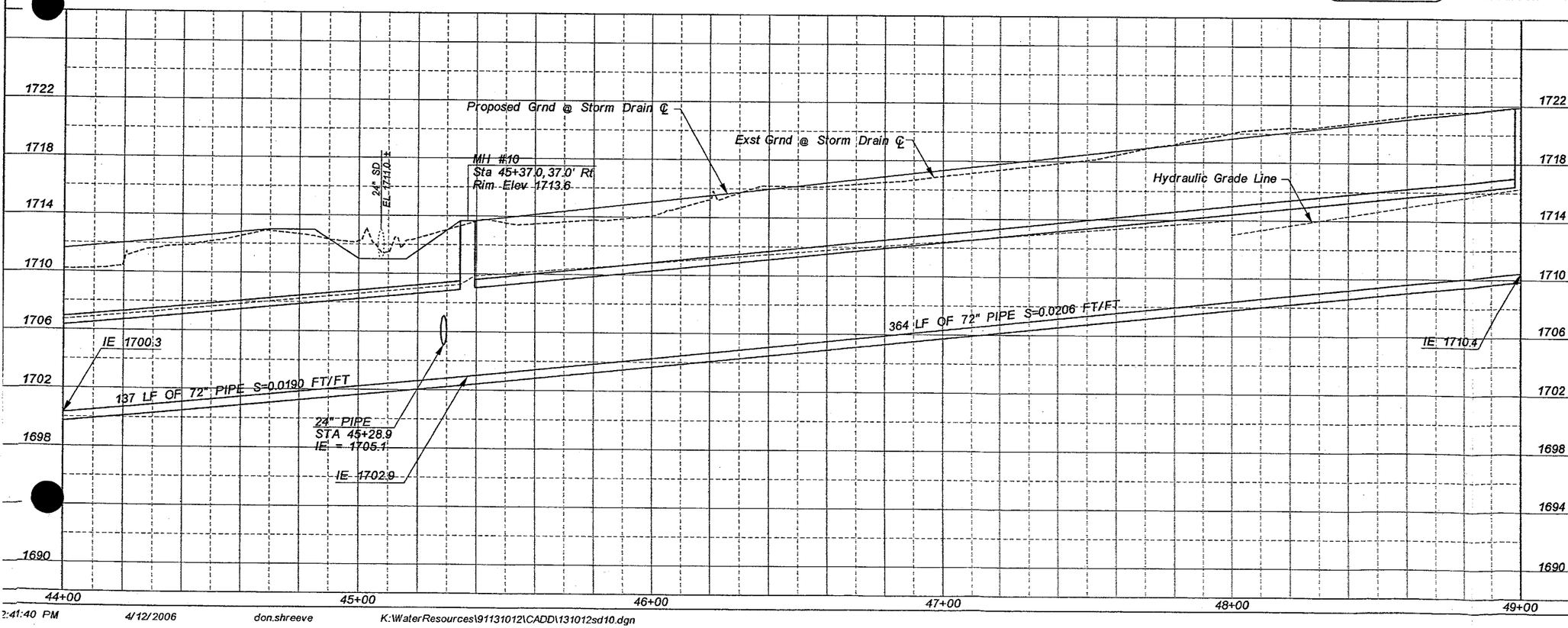

REMOVE

1. REMOVE EXISTING VEGETATION (NPI)
2. REMOVE HEADWALL — 2 EA

CONSTRUCT

INSTALL NEW STORM DRAIN PIPE

NO.	STATION TO STATION	DIAMETER INCHES	LENGTH FEET
1	44+00 - 45+32.5	72	137
2	45+32.5 - 49+00.5	72	364
3	45+28.9 (37' RT - 37' LT)	24	56

INSTALL NEW 5' DIA STORM DRAIN MANHOLE

NO.	STATION	BASE DETAIL	SHAFT DETAIL
4	45+37	521	522

5. CONSTRUCT CONCRETE CATCH BASIN PER MAG STD DET 537 — 2 EA

INSTALL NEW PREFABRICATED FITTING

NO.	STATION	SIZE
6	45+29	72" X 72" X 24" TEE

7. SALVAGE AND RELOCATE
8. PAVE DRIVEWAY WITH 4" AB — 65 SY
9. PAVE DRIVEWAY WITH 4" AB — 98 SY
10. RIPRAP — 6 SY
11. RELOCATE 8" ACP WATER LINE PER MAG DETAIL 370 — 26 LF

1. PROTECT IN PLACE VEGETATION (NPI)
2. PROTECT IN PLACE (NPI)

PAVEMENT REMOVAL AND REPLACEMENT SEE SHEETS RD1-RD5

● INDICATES POTHOLE LOCATION
■ INDICATES POTHOLE ELEVATION

NO.	REVISION	BY	DATE
3			
2			
1			

FLOOD CONTROL DISTRICT OF MARICOPA COUNTY
ENGINEERING DIVISION

MCDOWELL ROAD BASIN AND STORM DRAIN DESIGN
PCN 420.03.31

90%
PRELIMINARY NOT FOR CONSTRUCTION

	BY	DATE
DESIGNED	DEJ/JWH	04/07/06
DRAWN	DKS/JWH	04/07/06
CHECKED	RAE	04/07/06

Kimley-Horn and Associates, Inc.

DRAWING NO. SD10 — PLAN AND PROFILE SHEET STA 44+00 TO STA 49+00 — SHEET 22 OF 73

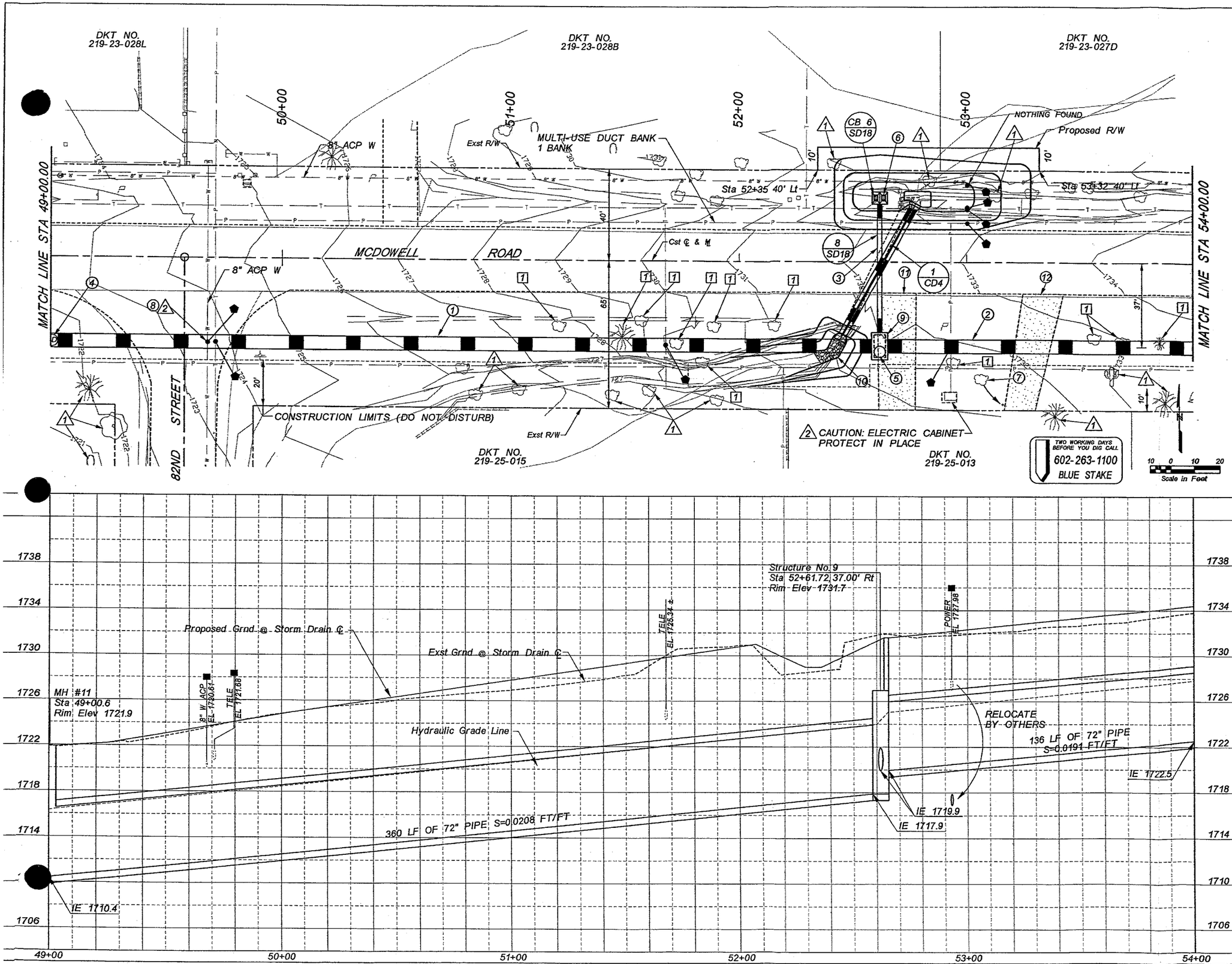

☐ REMOVE ☐

1 REMOVE EXISTING VEGETATION (NPI)

○ CONSTRUCT ○

INSTALL NEW STORM DRAIN PIPE

NO.	STATION TO STATION	DIAMETER INCHES	LENGTH FEET
1	49+00.5 - 52+55.5	72	360
2	52+55.5 - 54+00	72	136
3	52+59 (37' RT - 26' LT)	24	57

INSTALL NEW 5' DIA STORM DRAIN MANHOLE

NO.	STATION	BASE DETAIL	SHAFT DETAIL
4	49+00.6 MH 11	521	522
5	52+61.7	STRUCTURE NO 9	522

6 CONSTRUCT CONCRETE CATCH BASIN PER MAG STD DET 537

7 SALVAGE AND RELOCATE

8 REMOVE 8" ACP WATER LINE AND REPLACE WITH 8" DIP PER MAG STD DET 403-3. SEE SPECIFICATIONS FOR COORDINATING WATERLINE CONSTRUCTION WITH CITY OF MESA

9 CONSTRUCT STRUCTURE NO. 9 SEE DETAIL ST7 — 1 EA

10 RIPRAP — 9 SY

11 PAVE DRIVEWAY WITH 4" AB — 94 SY

12 PAVE DRIVEWAY WITH 4" AB — 90 SY

1 PROTECT IN PLACE VEGETATION (NPI)

2 PROTECT IN PLACE (NPI)

PAVEMENT REMOVAL AND REPLACEMENT SEE SHEETS RD1-RD5

⬟ INDICATES POTHOLE LOCATION

■ INDICATES POTHOLE ELEVATION

NO.	REVISION	BY	DATE
3			
2			
1			

FLOOD CONTROL DISTRICT OF MARICOPA COUNTY
ENGINEERING DIVISION

MCDOWELL ROAD BASIN AND STORM DRAIN DESIGN
PCN 420.03.31

90%
PRELIMINARY NOT FOR CONSTRUCTION

	BY	DATE
DESIGNED	DEJ/JWH	04/07/06
DRAWN	DKS/JWH	04/07/06
CHECKED	RAE	04/07/06

Kimley-Horn and Associates, Inc.

DRAWING NO. SD11

PLAN AND PROFILE SHEET STA 49+00 TO STA 54+00

SHEET 23 OF 73

:41:42 PM 4/12/2006 don.shreeve K:\WaterResources\91131012\CADD\131012sd11.dgn

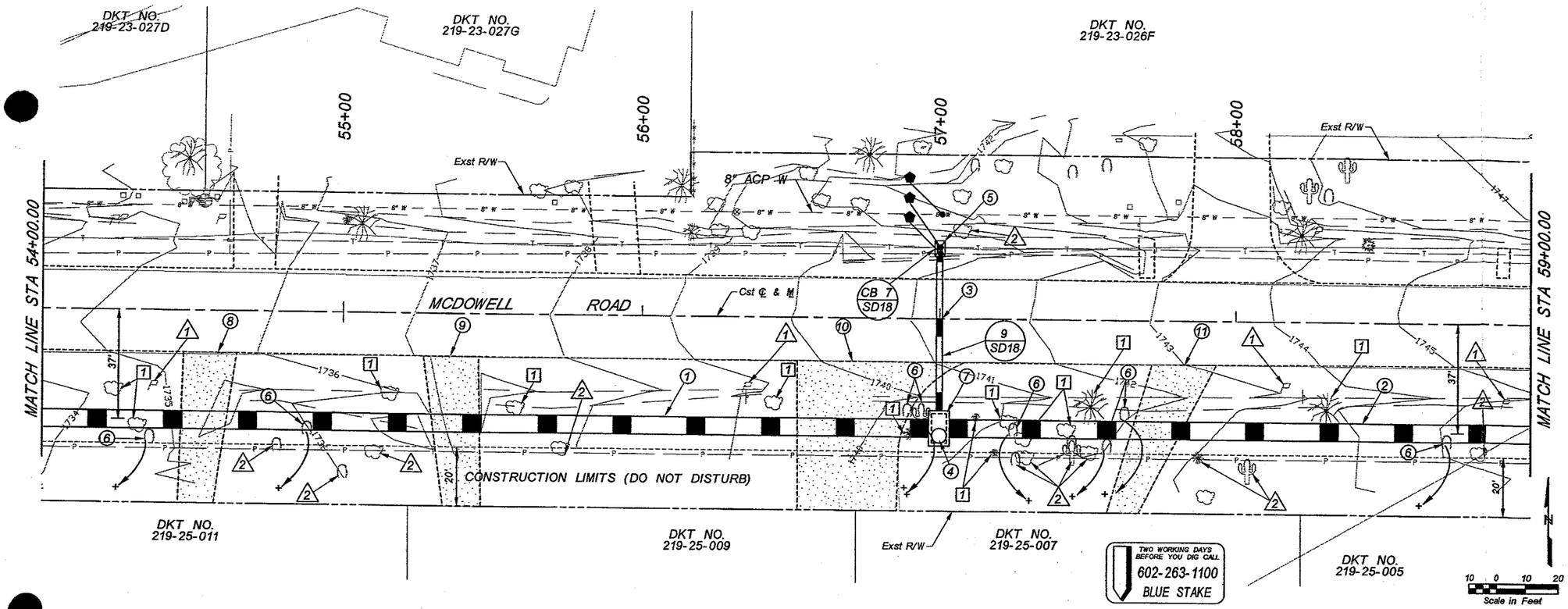

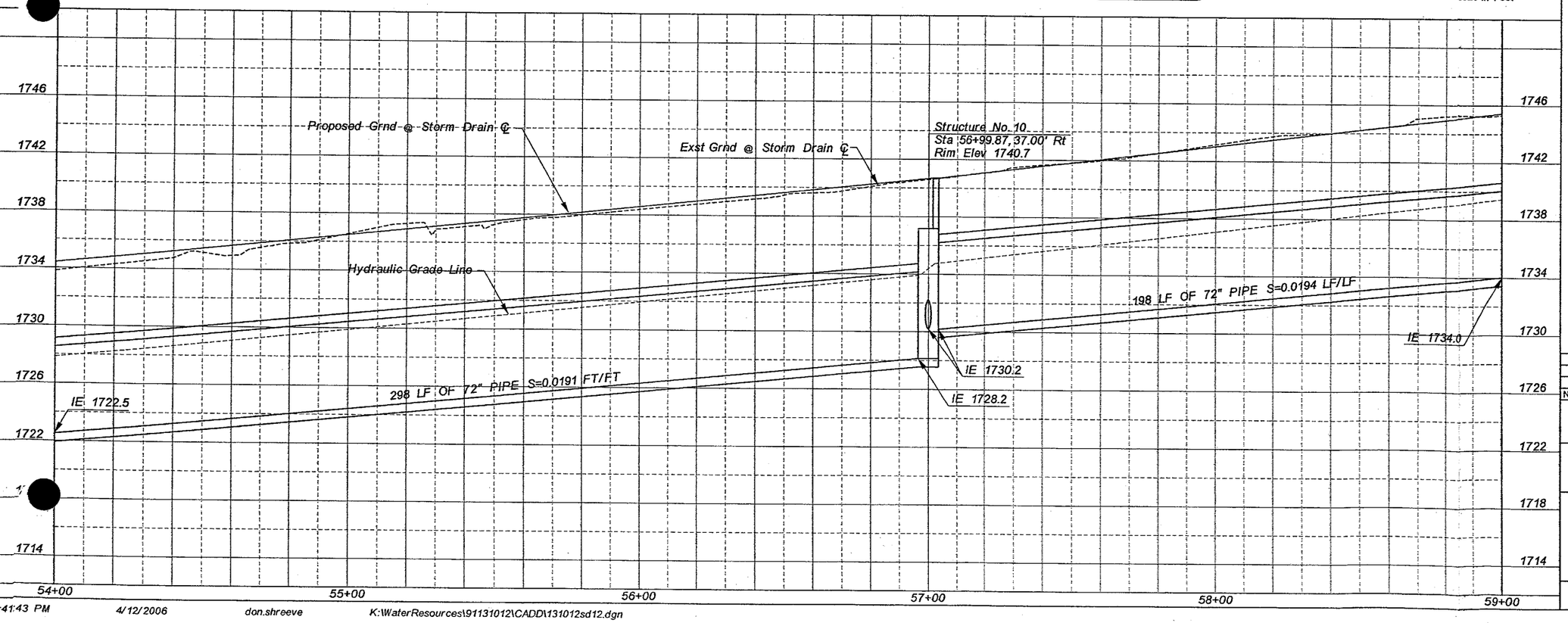

☐ REMOVE ☐

1 REMOVE EXISTING VEGETATION (NPI)

○ CONSTRUCT ○

INSTALL NEW STORM DRAIN PIPE

NO.	STATION TO STATION	DIAMETER INCHES	LENGTH FEET
1	54+00 - 57+00	72	298
2	57+00 - 59+00	72	198
3	57+01 (37' RT - 24' LT)	24	55

INSTALL NEW 5' DIA. STORM DRAIN MANHOLE

NO.	STATION	BASE DETAIL	SHAFT DETAIL
4	56+99.8	STRUCTURE # 10	522

5	CONSTRUCT CONCRETE CATCH BASIN PER MAG STD DET 537	2 EA
6	SALVAGE AND RELOCATE (NPI)	
7	CONSTRUCT STRUCTURE NO. 10 SEE DETAIL ST7	1 EA
8	PAVE DRIVEWAY WITH 4" AB	83 SY
9	PAVE DRIVEWAY WITH 4" AB	87 SY
10	PAVE DRIVEWAY WITH 4" AB	213 SY
11	PAVE DRIVEWAY WITH 4" AB	91 SY

△1 PROTECT IN PLACE (NPI)

△2 PROTECT IN PLACE VEGETATION (NPI)

PAVEMENT REMOVAL AND REPLACEMENT SEE SHEETS RD1-RD5

⬟ INDICATES POTHOLE LOCATION

■ INDICATES POTHOLE ELEVATION

NO.	REVISION	BY	DATE
3			
2			
1			

FLOOD CONTROL DISTRICT OF MARICOPA COUNTY
ENGINEERING DIVISION

MCDOWELL ROAD BASIN AND STORM DRAIN DESIGN
PCN 420.03.31

90%
PRELIMINARY NOT FOR CONSTRUCTION

	BY	DATE
DESIGNED	DEJ/JWH	04/07/06
DRAWN	DKS/JWH	04/07/06
CHECKED	RAE	04/07/06

Kimley-Horn and Associates, Inc.

DRAWING NO. SD12

PLAN AND PROFILE SHEET STA 54+00 TO STA 59+00

SHEET 24 OF 73

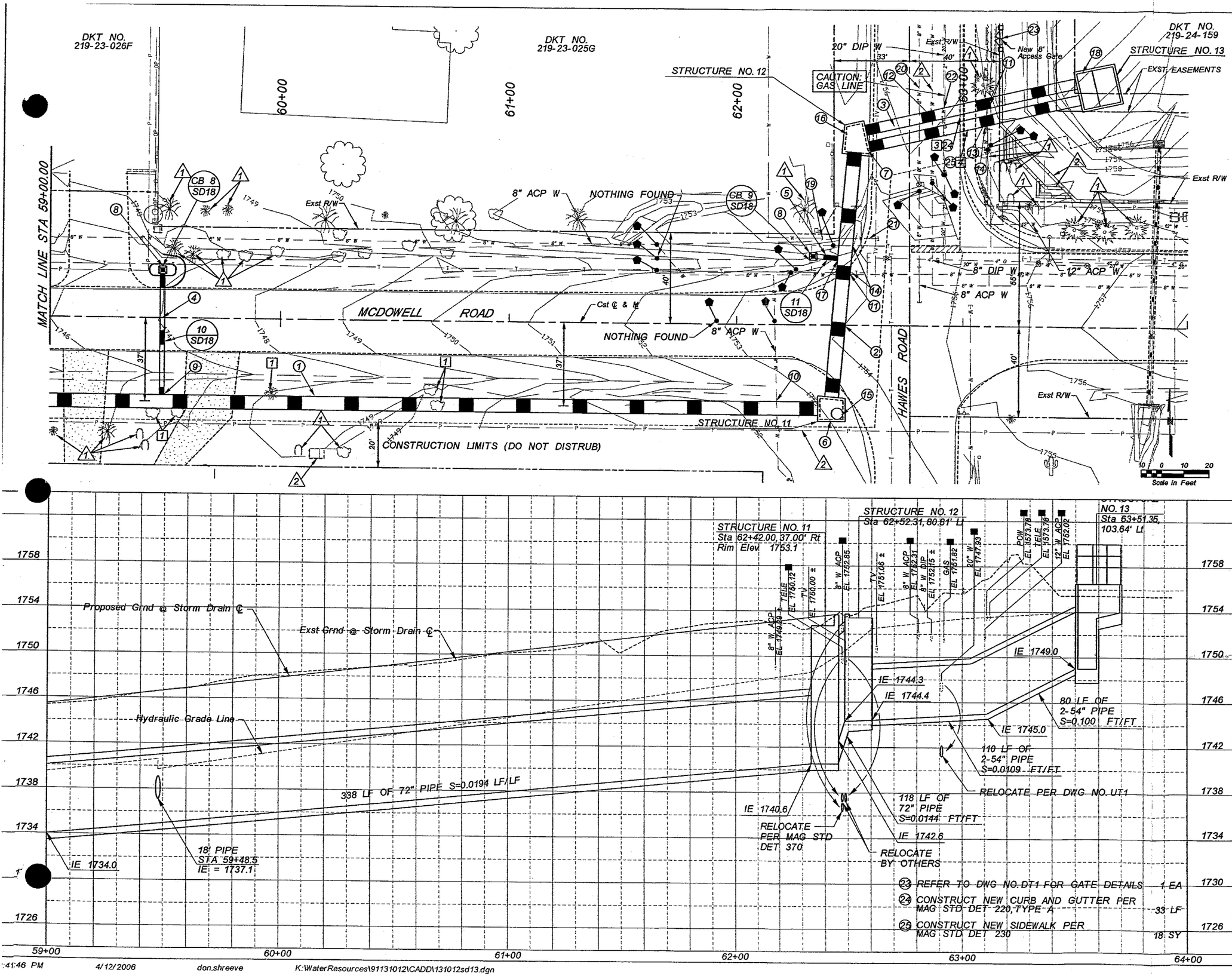

REMOVE

1	REMOVE EXISTING VEGETATION (NPI)	
2	REMOVE BLOCK WALL	33 LF
3	REMOVE CURB AND GUTTER	33 LF
4	REMOVE SIDEWALK	18 SY

CONSTRUCT

INSTALL NEW STORM DRAIN PIPE

NO.	STATION TO STATION	DIAMETER INCHES	LENGTH FEET
1	59+00 - 62+39.5	72	338
2	62+39.5 - 62+54.4	78	110
3	62+54.4 - 63+55	2 - 54	190
4	59+48, (37' RT - 22.5 LT)	18	63
5	62+47.9 - 62+32.3, (30.2' LT)	18	14

6	CONSTRUCT STRUCTURE # 11 SEE DETAIL ST8	1 EA
7	CONSTRUCT STRUCTURE # 12 SEE DETAIL ST9	1 EA
8	CONSTRUCT CONCRETE CATCH BASIN PER MAG STD DET 537	2 EA

INSTALL NEW PREFABRICATED FITTING

NO.	STATION	SIZE
9	59+48.5	72" X 72" X 18" TEE
17	62+47.9	78" X 78" X 18" TEE

10	RELOCATE PER MAG STD DET 370	26 LF
11	RELOCATE PER MAG STD DET 370	26 LF
12	RELOCATE PER MAG STD DET 370	32 LF
13	RELOCATE PER MAG STD DET 370	32 LF
14	ALL PRIVATE UTILITIES SHALL BE RELOCATED BY OTHERS	

INSTALL NEW 5' DIA. STORM DRAIN MANHOLE

NO.	STATION	BASE DETAIL	SHAFT DETAIL
15	62+39.5	STRUCTURE NO 11	522
16	62+54.4	STRUCTURE NO 12	

18	CONSTRUCT STRUCTURE # 13 SEE DETAIL ST10	1 EA
19	CAP 8" ACP WATER LINE PER MAG STD DET 310 CAP ONLY	1 EA
20	PROTECT IN PLACE PER MAG STD DET 403-3	
21	REMOVE 8" WATER LINE	25 LF
22	RELOCATE 20" WATERLINE PER DETAIL UT1	1 EA
1	PROTECT IN PLACE VEGETATION (NPI)	
2	PROTECT IN PLACE (NPI)	
	PAVEMENT REMOVAL AND REPLACEMENT SEE SHEETS RD1-RD5	
⬟	INDICATES POTHOLE LOCATION	
■	INDICATES POTHOLE ELEVATION	

23	REFER TO DWG NO. DT1 FOR GATE DETAILS	1 EA	
24	CONSTRUCT NEW CURB AND GUTTER PER MAG STD DET 220, TYPE A	33 LF	
25	CONSTRUCT NEW SIDEWALK PER MAG STD DET 230	18 SY	

NO.	REVISION	BY	DATE
3			
2			
1			

FLOOD CONTROL DISTRICT OF MARICOPA COUNTY
ENGINEERING DIVISION

MCDOWELL ROAD BASIN AND STORM DRAIN DESIGN
PCN 420.03.31

90%
PRELIMINARY NOT FOR CONSTRUCTION

	BY	DATE
DESIGNED	DEJ/JWH	04/07/06
DRAWN	DKS/JWH	04/07/06
CHECKED	RAE	04/07/06

Kimley-Horn and Associates, Inc.

DRAWING NO. SD13

PLAN AND PROFILE SHEET STA 59+00 TO STA 64+00

SHEET 25 OF 73

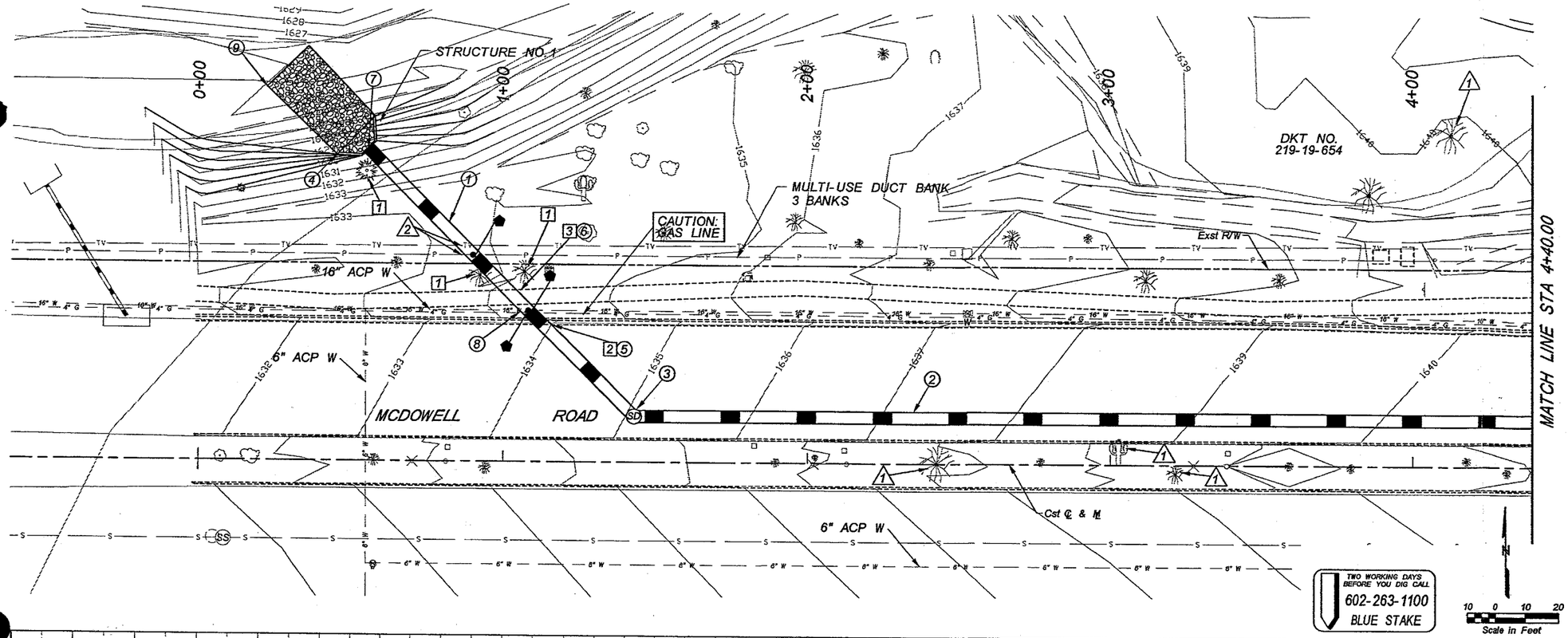

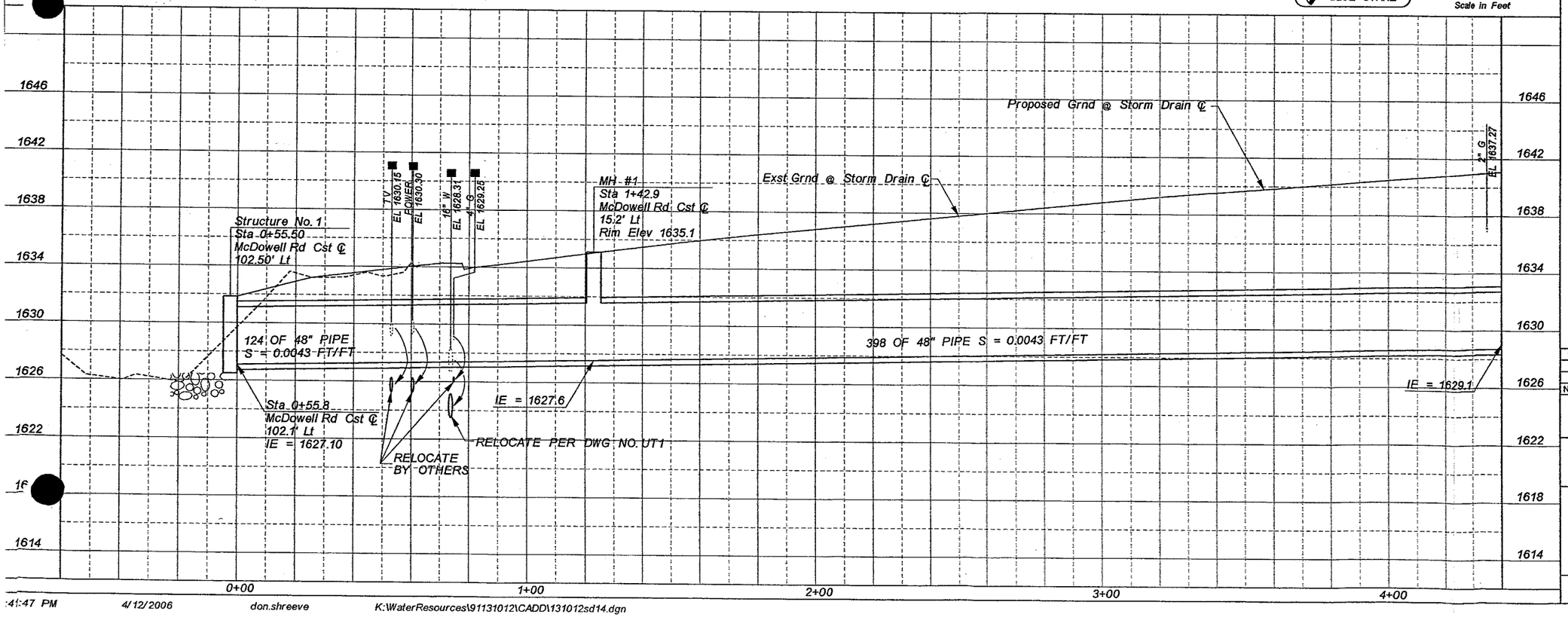

☐ REMOVE ☐

1. REMOVE EXISTING VEGETATION (NPI)
2. REMOVE EXISTING CURB AND GUTTER 14 LF
3. REMOVE EXISTING SIDEWALK 7.7 SY

○ CONSTRUCT ○

INSTALL NEW RCP STORM DRAIN PIPE

NO.	STATION TO STATION	DIAMETER INCHES	LENGTH FEET
1	0+55.84 - 1+42.86	48"	124
2	1+42.86 - 4+40	48"	298

INSTALL NEW 5' DIA. STORM DRAIN MANHOLE

NO.	STATION	BASE DETAIL	SHAFT DETAIL	30" COVER DETAIL
3	1+42.86 MH 1	520	522	424

4. CONSTRUCT CONCRETE HEADWALL W/ APRON PER MAG STD DETAIL 501-3 1 EA
5. CONSTRUCT NEW CURB & GUTTER PER MAG STD DET 220, TYPE A 14 LF
6. CONSTRUCT NEW SIDEWALK PER MAG STD DET 230 7.7 SY
7. INSTALL 48" STORM DRAIN ACCESS BARRIER PER COP DET P-1563 1 EA
8. RELOCATE 16" ACP WATER LINE PER MAG STD DET 370 26 LF
9. RIPRAP 73 SY

△1 PROTECT IN PLACE VEGETATION (NPI)

△2 PROTECT IN PLACE (NPI)

PAVEMENT REMOVAL AND REPLACEMENT SEE SHEETS RD1-RD5

⬟ INDICATES POTHOLE LOCATION

■ INDICATES POTHOLE ELEVATION

NO.	REVISION	BY	DATE
3			
2			
1			

FLOOD CONTROL DISTRICT OF MARICOPA COUNTY
ENGINEERING DIVISION

MCDOWELL ROAD BASIN AND STORM DRAIN DESIGN
PCN 420.03.31

90%
PRELIMINARY NOT FOR CONSTRUCTION

	BY	DATE
DESIGNED	DEJ/JWH	04/07/06
DRAWN	DKS/JWH	04/07/06
CHECKED	RAE	04/07/06

Kimley-Horn and Associates, Inc.

DRAWING NO. SD14 | PLAN AND PROFILE SHEET STA 0+00 TO STA 4+40 | SHEET 26 OF 73

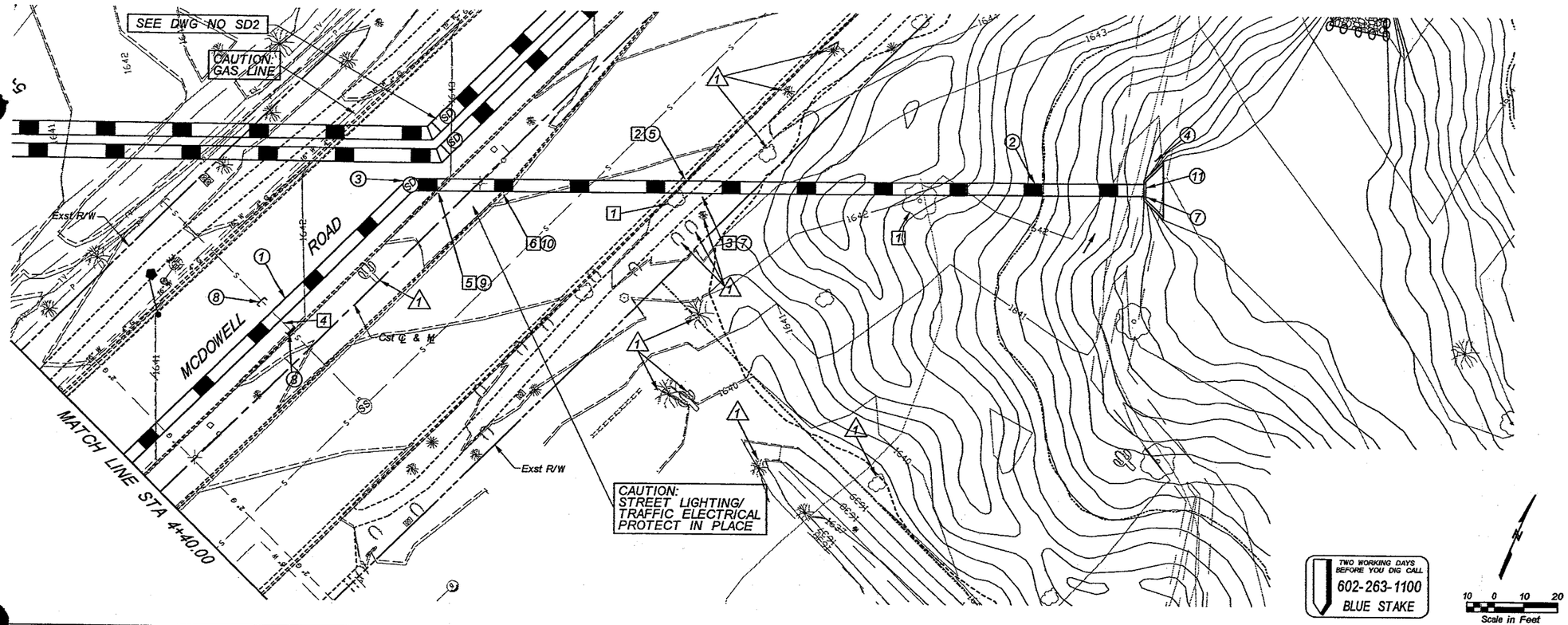

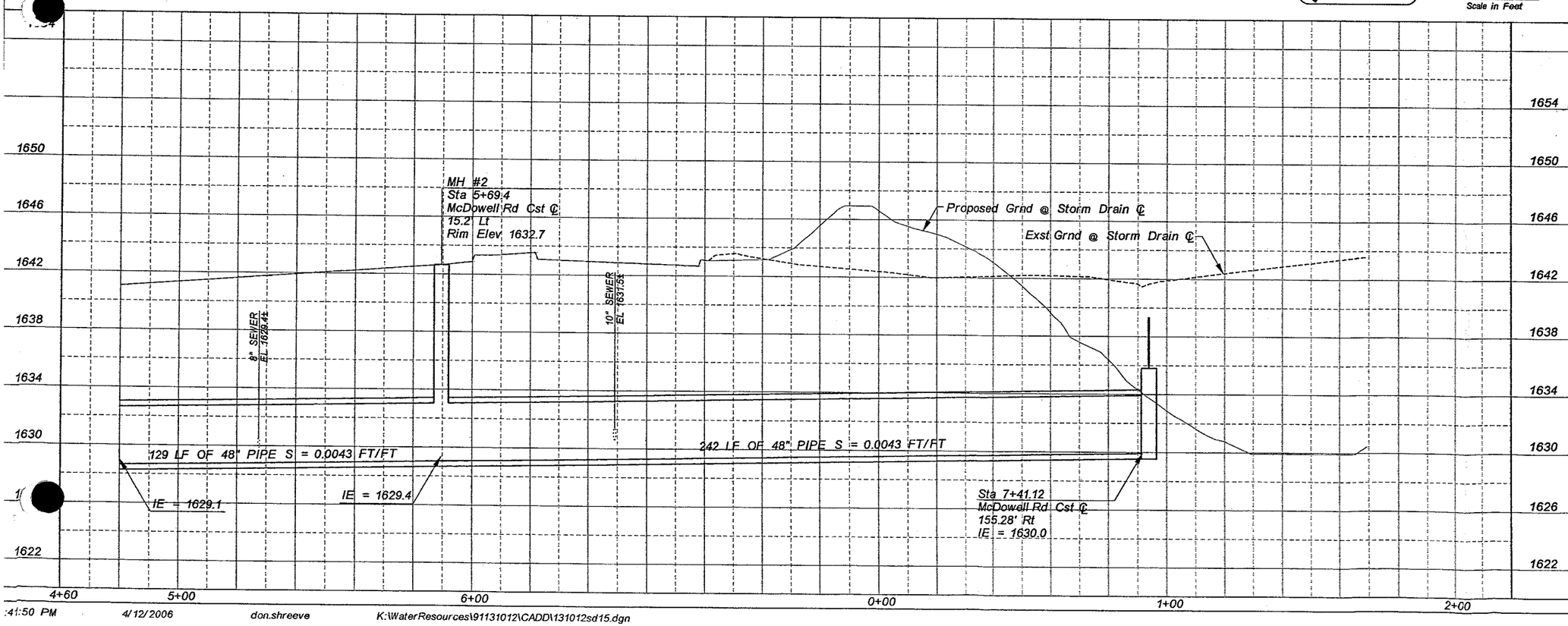

REMOVE

1. REMOVE EXISTING VEGETATION (NPI)
2. REMOVE EXISTING CURB AND GUTTER 14 LF
3. REMOVE EXISTING SIDEWALK 7.7 SY
4. REMOVE EXISTING SANITARY SEWER 14 LF
5. REMOVE EXISTING VERTICAL CURB 14 LF
6. REMOVE EXISTING VERTICAL CURB 14 LF

CONSTRUCT

INSTALL NEW RCP STORM DRAIN PIPE

NO.	STATION TO STATION	DIAMETER INCHES	LENGTH FEET
1	4+40 - 5+69.26	48	129
2	5+69.26 - 7+41.12	48	242

INSTALL NEW 5' DIA. STORM DRAIN MANHOLE

NO.	STATION	BASE DETAIL	SHAFT DETAIL	30" COVER DETAIL
3	5+69.4 MH 2	521	522	424

4. CONSTRUCT CONCRETE HEADWALL W/ APRON PER MAG STD DET 501-3 1 EA
5. CONSTRUCT NEW CURB & GUTTER PER MAG STD DET 220, TYPE A 14 LF
6. CONSTRUCT NEW SIDEWALK PER MAG STD DET 230 7.7 SY
7. INSTALL 42" STORM DRAIN ACCESS BARRIER PER COP DET P-1563 1 EA
8. PLUG EXISTING SANITARY SEWER LINE 2 EA
9. CONSTRUCT VERTICAL CURB PER MAG STD DET 222 TYPE A 14 LF
10. CONSTRUCT VERTICAL CURB PER MAG STD DET 222 TYPE A 14 LF
11. INSTALL 41" DIAMETER RESTRICTOR PLATE 1 EA

△1 PROTECT IN PLACE VEGETATION (NPI)

PAVEMENT REMOVAL AND REPLACEMENT SEE SHEETS RD1-RD5

⬟ INDICATES POTHOLE LOCATION

■ INDICATES POTHOLE ELEVATION

NO.	REVISION	BY	DATE
3			
2			
1			

FLOOD CONTROL DISTRICT OF MARICOPA COUNTY
ENGINEERING DIVISION

MCDOWELL ROAD BASIN AND STORM DRAIN DESIGN
PCN 420.03.31

90%
PRELIMINARY NOT FOR CONSTRUCTION

	BY	DATE
DESIGNED	DEJ/JWH	04/07/06
DRAWN	DKS/JWH	04/07/06
CHECKED	RAE	04/07/06

Kimley-Horn and Associates, Inc.

DRAWING NO. SD15

PLAN AND PROFILE SHEET STA 4+40 TO STA 6+60

SHEET 27 OF 73

:41:50 PM 4/12/2006 don.shreeve K:\WaterResources\91131012\CADD\131012sd15.dgn

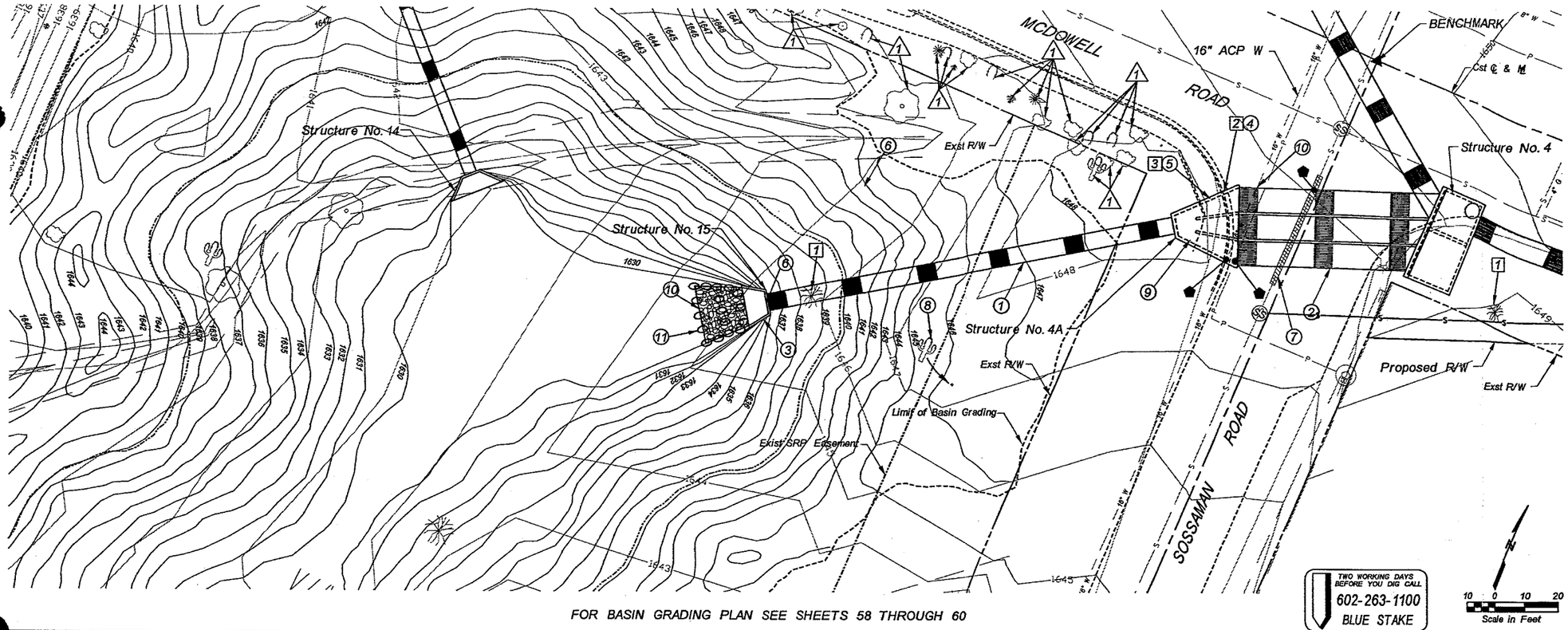

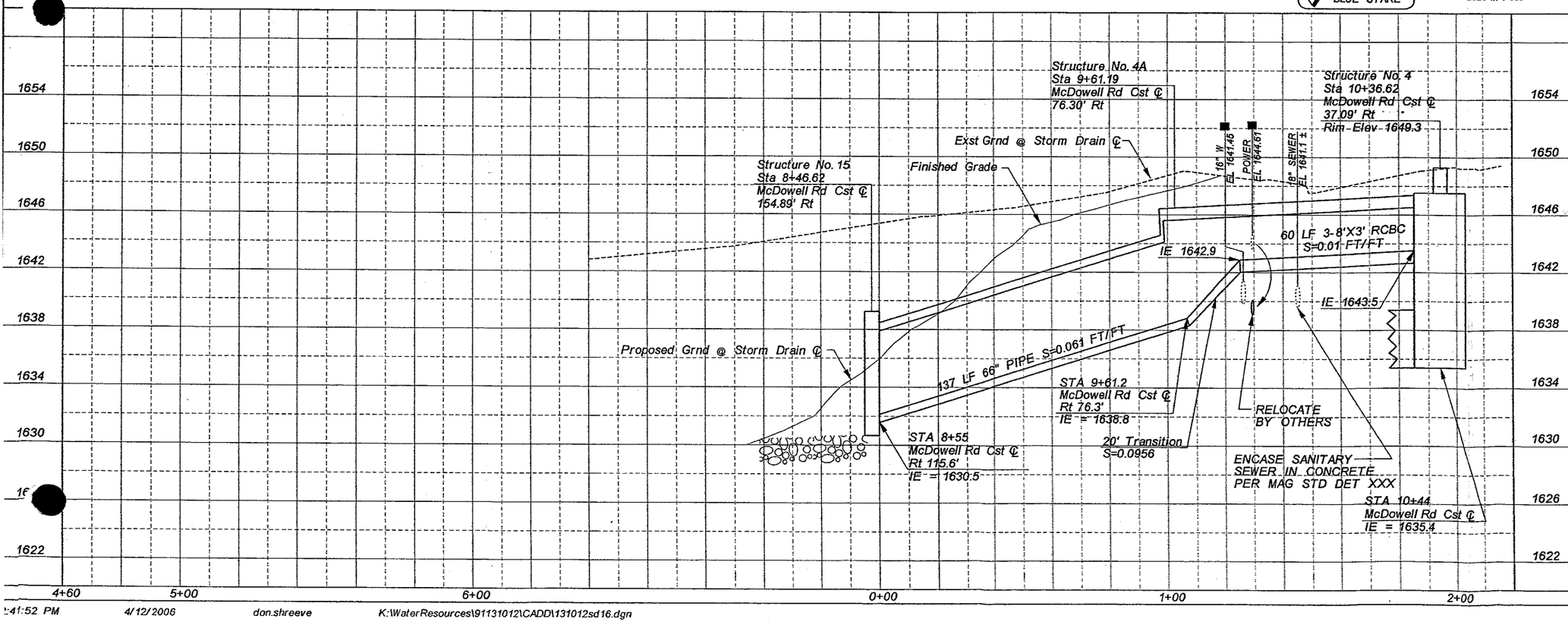

☐ REMOVE ☐

1. REMOVE EXISTING VEGETATION (NPI)
2. REMOVE EXISTING CURB AND GUTTER 14 LF
3. REMOVE EXISTING SIDEWALK 7.7 SY

○ CONSTRUCT ○

INSTALL NEW RCP STORM DRAIN PIPE

NO.	STATION TO STATION	DIAMETER INCHES	LENGTH FEET
1	8+55 - 9+61.2	66	137

INSTALL NEW RCBC

NO.	STATION TO STATION	WIDTH HEIGHT	LENGTH FEET
2	9+79.7 - 10+36.0	3-8'X3'	60

3. CONSTRUCT CONCRETE HEADWALL W/ APRON PER MAG STD DET 501-3 — 1 EA
4. CONSTRUCT NEW CURB & GUTTER PER MAG STD DET 220, TYPE A — 14 LF
5. CONSTRUCT NEW SIDEWALK PER MAG STD DET 230 — 7.7 SY
6. INSTALL 66" STORM DRAIN ACCESS BARRIER PER COP DET P-1563 — 1 EA
7. INSTALL ENCASEMENT PER MAG STD DET 404-3 — 40 LF
8. SALVAGE AND RELOCATE (NPI)
9. CONSTRUCT STRUCTURE NO. 4A SEE DETAIL ST6 — 1 EA
10. RIPRAP — 27 SY
11. INSTALL ENERGY DISSIPATING LANDSCAPE BOULDERS — 17 EA

⚠1 PROTECT IN PLACE VEGETATION (NPI)

PAVEMENT REMOVAL AND REPLACEMENT SEE SHEETS RD1-RD5

⬟ INDICATES POTHOLE LOCATION
■ INDICATES POTHOLE ELEVATION

NO.	REVISION	BY	DATE
3			
2			
1			

FLOOD CONTROL DISTRICT OF MARICOPA COUNTY
ENGINEERING DIVISION

MCDOWELL ROAD BASIN AND STORM DRAIN DESIGN
PCN 420.03.31

90%
PRELIMINARY NOT FOR CONSTRUCTION

	BY	DATE
DESIGNED	DEJ/JWH	04/07/06
DRAWN	DKS/JWH	04/07/06
CHECKED	RAE	04/07/06

Kimley-Horn and Associates, Inc.
© 2006 KIMLEY-HORN AND ASSOCIATES, INC.

DRAWING NO.	PLAN AND PROFILE SHEET	SHEET OF
SD16	STA 4+00 TO STA 7+00	28 73

Stage Storage Data for McDowell Road Detention Basin

Kimley-Horn
and Associates, Inc.

Stage	Area [ft^2]	Area [acres]	Volume [ac-ft]	Cum. Volume [ac-ft]
0	7619.57	0.17	0.00	0.00
1	12382.09	0.28	0.23	0.23
2	17071.05	0.39	0.34	0.57
3	21362.29	0.49	0.44	1.01
4	26631.68	0.61	0.55	1.56
5	31713.58	0.73	0.67	2.23
6	37097.98	0.85	0.79	3.02
7	42407.46	0.97	0.91	3.93
8	49419.88	1.13	1.05	4.99
9	56454.41	1.30	1.22	6.20
10	63951.81	1.47	1.38	7.58
11	72732.81	1.67	1.57	9.15

Kimley-Horn
and Associates, Inc.

This rating curve was developed using the HY-8 file named mcdout.
The structure is a 48" RCP with a 41" oriface plate at the inlet.
This spreadsheet reflects conditions from the 90% submittal.
The Pipe length has increased to 792 feet.

Values From Hy-8	
Q [cfs]	Depth [ft]
0	0
12	0.70
24	1.48
36	2.10
48	2.68
60	3.30
72	4.03
84	4.89
96	5.90
108	7.07
120	8.38

Values From Rating Curve*	
D [ft]	Q [cfs]
0	0.00
1	15.93
2	34.81
3	53.87
4	71.19
5	85.76
6	97.45
7	107.05
8	116.20
9	127.46
10	144.28
11	170.98

*Values for the rating curve were developed from a fourth order polynomial best-fit curve.

Kimley-Horn
and Associates, Inc.

McDowell Road Basin
Discharge/Storage Relationship

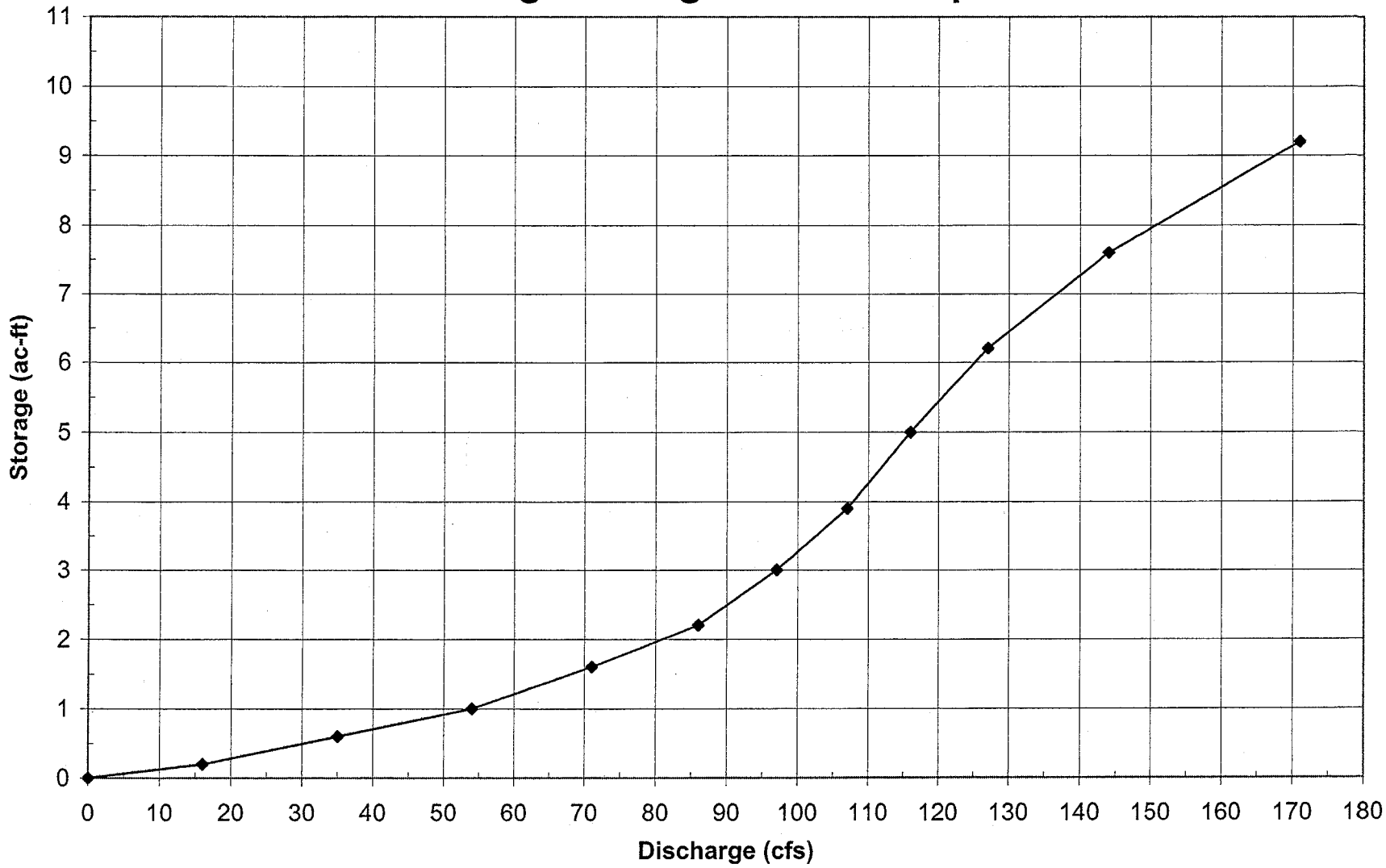

Kimley-Horn
and Associates, Inc.

McDowell Road Basin
Discharge/Stage Relationship

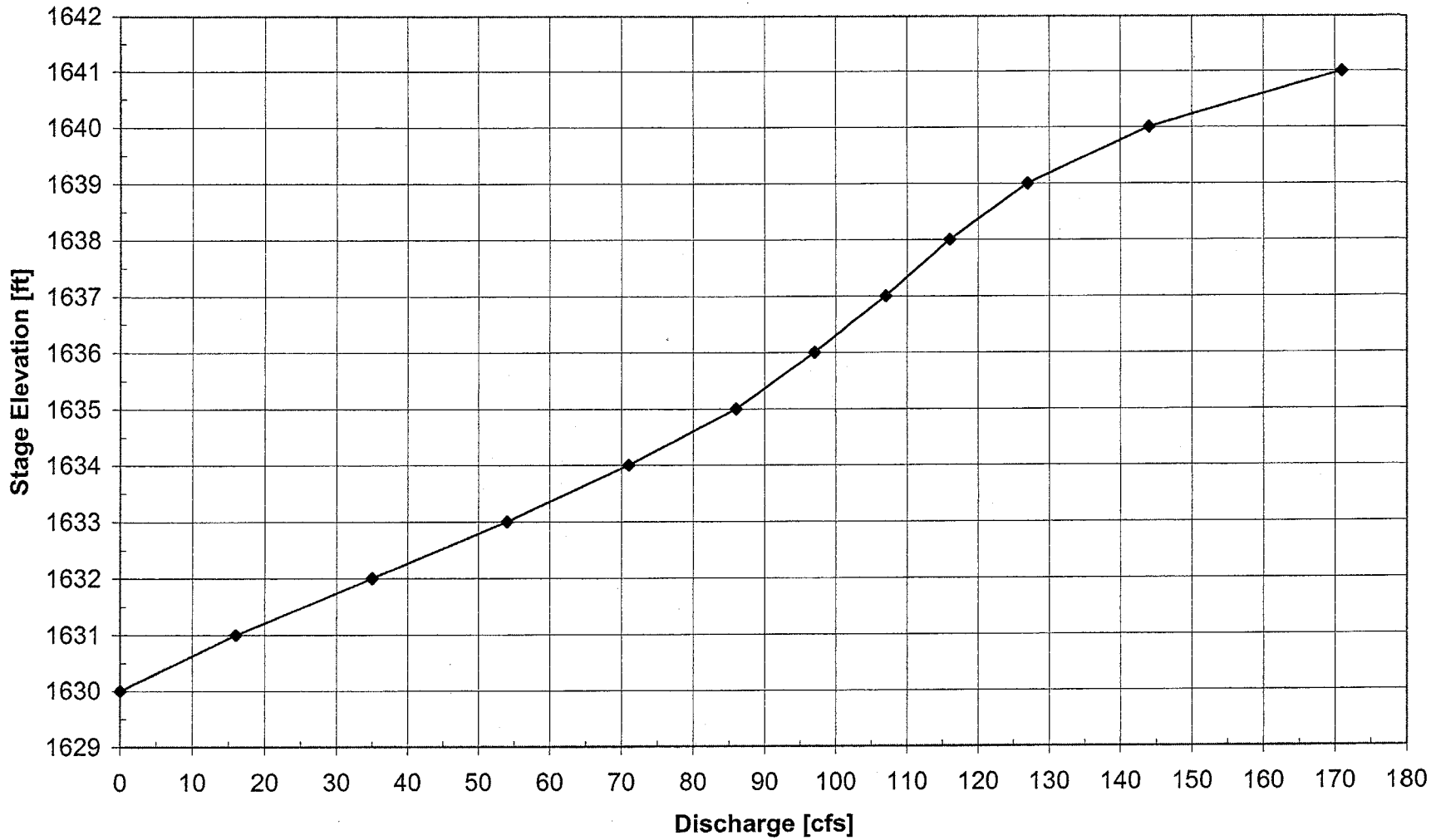

Option 4 HEC-1 Summary Output

Kimley-Horn
and Associates, Inc.

November 30, 2006

Suite 300
7878 N. 16th Street
Phoenix, Arizona
85020

Mr. Scott Vogel, P.E.
Senior Project Manager
Flood Control District of Maricopa County
2801 W. Durango Street
Phoenix, Arizona 85009

RE: McDowell Road Basin and Storm Drain Design
FCD 2004C052
Change Order No. 2

Dear Scott:

We are submitting for your approval the tasks outlined in Change Order No. 2 for the McDowell Road Basin and Storm Drain Project. The assignment for the change order was to convert the Spook Hill ADMP DDMS files prepared by Wood/Patel to DDMSW format. The conversion was conducted on the entire watershed as defined in the Spook Hill ADMP Update, using the DDMS files provided to Kimley-Horn (KHA) by Wood/Patel on July 27, 2005.

The completion of the tasks for Change Order No. 2 is discussed below:

Task 1: Import DDMS files to DDMSW version 3.2.9 (this version was provided to Kimley-Horn by the District in a meeting on September 15, 2005).

This task was completed, the HEC-1 output file is attached. All DDMSW files are provided on the enclosed CD.

Task 2: Delete the JD records in the ADMPU and let DDMSW populate the fields according to the new version's algorithm.

This task was unnecessary because DDMSW imported all of the files correctly.

TEL 602 944 5500
FAX 602 944 7423

Task 3: Revise stage-storage records at Signal Butte FRS and Apache Junction FRS to match the latest provided to Kimley-Horn by Joe Rumann.

Stage-storage records at Signal Butte FRS and Apache Junction FRS were changed to reflect current stage-storage records. See attached HEC-1 output file.

Task 4: Review times of concentration, Joe Rumann requested this step in a phone conversation 9/27/05. He said that the DDMSW version 3.2.9 may have a bug in it. He requested that KHA check the m and b values used to determine K_b in the time of concentration equation.

*As shown in **Table 1**, the m and b values from the Spook Hill ADMP were used to calculate their corresponding K_b values. These values were then compared to those generated in DDMSW. The K_b values generated with DDMSW are consistent with those in the ADMP.*

Task 5: Prepare a table of flow comparisons for representative areas of the model.

*Flow comparisons were completed for ten representative areas. **Table 2** provides the results of this comparison. All areas match.*

Submitted:

- Table 1. Comparison of K_b Values.
- Table 2. Comparison of Flows Between DDMS and DDMSW.
- Edited subbasin map (11 inch x17 inch)
- Hard copy of HEC-1 output file
- Edited subbasin map (24 inch x 36 inch)
- Electronic copy of HEC-1 input and output files (on CD)
- Electronic copy of DDMSW files (on CD)

Sincerely,

Kimley-Horn and Associates, Inc.

David Jensen, P.E., CFM
Project Engineer

Table 1. Comparison of K_b value.

Area ID	Area [mi^2]	Area [acres]	From DDMS Files for Spook Hill ADMP			K_b [Generated by DDMSW]	Difference
			m	b	Calculated K_b (1)		
10	0.690	442	-0.01375	0.080	0.044	0.044	0.000
20	1.167	747	-0.01375	0.080	0.040	0.040	0.000
40	2.227	1425	-0.01356	0.079	0.036	0.036	0.000
60	1.751	1121	-0.01352	0.079	0.038	0.038	0.000
80	1.493	956	-0.01374	0.080	0.039	0.039	0.000
100	0.488	312	-0.01362	0.079	0.045	0.045	0.000
120	2.197	1406	-0.01376	0.080	0.037	0.037	0.000
140	0.598	383	-0.01375	0.080	0.044	0.044	0.000
150	0.407	260	-0.01375	0.080	0.047	0.047	0.000
160	0.365	234	-0.01375	0.080	0.047	0.047	0.000
180	1.014	649	-0.01375	0.080	0.041	0.041	0.000
190	0.918	588	-0.01375	0.080	0.042	0.042	0.000
200	0.530	339	-0.01375	0.080	0.045	0.045	0.000
210	0.792	507	-0.01375	0.080	0.043	0.043	0.000
220	0.473	303	-0.01375	0.080	0.046	0.046	0.000
240	1.408	901	-0.01375	0.080	0.039	0.039	0.000
260	0.263	168	-0.01290	0.075	0.046	0.046	0.000
280	0.319	204	-0.01375	0.080	0.048	0.048	0.000
300	0.289	185	-0.01375	0.080	0.049	0.049	0.000
305A	0.316	202	-0.01375	0.080	0.048	0.048	0.000
305B	0.386	247	-0.01375	0.080	0.047	0.047	0.000
310	0.538	344	-0.01375	0.080	0.045	0.045	0.000
320A	0.270	173	-0.01375	0.080	0.049	0.049	0.000
320B1	0.454	291	-0.01375	0.080	0.046	0.046	0.000
320B2	0.220	141	-0.01358	0.079	0.050	0.050	0.000
340A1	1.089	697	-0.01486	0.087	0.045	0.045	0.000
340A2	0.037	24	-0.01014	0.061	0.047	0.047	0.000
340B	0.290	186	-0.01375	0.080	0.049	0.049	0.000
350	0.997	638	-0.01375	0.080	0.041	0.041	0.000
355	0.676	433	-0.01375	0.080	0.044	0.044	0.000
360	0.880	563	-0.01437	0.084	0.044	0.044	0.000
370	0.672	430	-0.01375	0.080	0.044	0.044	0.000

Notes: (1) K_b was calculated using the equation provided in Table 3.1 of the Drainage Design Manual for Maricopa County, $K_b = m\log A + b$.
(2) Sub area altered for the McDowell Road Basin and Storm Drain model.

Table 1. Comparison of K_b value.

Area ID	Area [mi^2]	Area [acres]	From DDMS Files for Spook Hill ADMP			K_b [Generated by DDMSW]	Difference
			m	b	Calculated K_b (1)		
380A	0.261	167	-0.02007	0.121	0.076	0.076	0.000
380B1	0.369	236	-0.01375	0.080	0.047	0.047	0.000
380B2	0.096	61	-0.01375	0.080	0.055	0.055	0.000
380B3	0.123	79	-0.01375	0.080	0.054	0.054	0.000
385A	0.018	12	n/a (2)	n/a (2)	n/a (2)	0.065	n/a (2)
385B	0.077	49	n/a (2)	n/a (2)	n/a (2)	0.057	n/a (2)
385C	0.501	321	n/a (2)	n/a (2)	n/a (2)	0.039	n/a (2)
390A	0.024	15	n/a (2)	n/a (2)	n/a (2)	0.064	n/a (2)
390B	0.101	65	n/a (2)	n/a (2)	n/a (2)	0.055	n/a (2)
390C	0.121	77	n/a (2)	n/a (2)	n/a (2)	0.054	n/a (2)
395	0.199	127	-0.01375	0.080	0.051	0.051	0.000
395A	0.187	120	n/a (2)	n/a (2)	n/a (2)	0.051	n/a (2)
395B	0.004	3	n/a (2)	n/a (2)	n/a (2)	0.074	n/a (2)
400A	0.048	31	-0.02100	0.125	0.094	0.094	0.000
400B1	0.385	246	-0.01626	0.096	0.057	0.057	0.000
400B2	0.194	124	-0.01375	0.080	0.051	0.051	0.000
400B3	0.024	15	-0.01375	0.080	0.064	0.064	0.000
415A	0.280	179	-0.01375	0.080	0.049	0.049	0.000
415B	0.276	177	-0.01375	0.080	0.049	0.048	-0.001
420A1	0.566	362	-0.01348	0.079	0.045	0.044	-0.001
420A2	0.022	14	-0.01375	0.080	0.064	0.064	0.000
420B05	0.040	26	n/a (2)	n/a (2)	n/a (2)	0.061	n/a (2)
420B10	0.025	16	n/a (2)	n/a (2)	n/a (2)	0.063	n/a (2)
420B15	0.011	7	n/a (2)	n/a (2)	n/a (2)	0.068	n/a (2)
420B20	0.014	9	n/a (2)	n/a (2)	n/a (2)	0.067	n/a (2)
420B25	0.084	54	n/a (2)	n/a (2)	n/a (2)	0.056	n/a (2)
420B30	0.055	35	n/a (2)	n/a (2)	n/a (2)	0.059	n/a (2)
420B35	0.034	22	n/a (2)	n/a (2)	n/a (2)	0.062	n/a (2)
420B40	0.005	3	n/a (2)	n/a (2)	n/a (2)	0.073	n/a (2)
420B45	0.007	4	n/a (2)	n/a (2)	n/a (2)	0.071	n/a (2)

Notes: (1) K_b was calculated using the equation provided in Table 3.1 of the Drainage Design Manual for Maricopa County, $K_b = m\log A + b$.
(2) Sub area altered for the McDowell Road Basin and Storm Drain model.

Table 1. Comparison of K_b value.

Area ID	Area [mi^2]	Area [acres]	From DDMS Files for Spook Hill ADMP			K_b [Generated by DDMSW]	Difference
			m	b	Calculated K_b (1)		
440	0.080	51	-0.00880	0.054	0.039	0.039	0.000
441	0.010	6	-0.01375	0.080	0.069	0.069	0.000
442	0.100	64	-0.01375	0.080	0.055	0.055	0.000
443	0.080	51	-0.01180	0.070	0.050	0.050	0.000
444	0.040	26	-0.00707	0.044	0.034	0.034	0.000
445	0.190	122	-0.00903	0.055	0.036	0.036	0.000
446	0.040	26	-0.01375	0.080	0.061	0.061	0.000
447	0.090	58	-0.01375	0.080	0.056	0.056	0.000
448	0.045	29	-0.00899	0.055	0.042	0.042	0.000
449	0.050	32	-0.01221	0.072	0.054	0.054	0.000
450	0.070	45	-0.01350	0.079	0.057	0.057	0.000
451	0.025	16	-0.01375	0.080	0.063	0.063	0.000
452	0.040	26	-0.01232	0.072	0.055	0.055	0.000
453	0.060	38	-0.01375	0.080	0.058	0.058	0.000
454	0.180	115	-0.01356	0.079	0.051	0.051	0.000
455	1.111	711	-0.01369	0.080	0.041	0.041	0.000
456	0.260	166	-0.01239	0.073	0.045	0.045	0.000
457	0.190	122	-0.01187	0.070	0.045	0.045	0.000
458	0.190	122	-0.01271	0.074	0.048	0.048	0.000
459	0.030	19	-0.01108	0.066	0.052	0.052	0.000
460	0.140	90	-0.01482	0.087	0.058	0.058	0.000
461	0.120	77	-0.01313	0.077	0.052	0.052	0.000
462	0.301	193	-0.01258	0.074	0.045	0.045	0.000
480	0.731	468	-0.01326	0.077	0.042	0.042	0.000
500	0.930	595	-0.01375	0.080	0.042	0.042	0.000

Notes: (1) K_b was calculated using the equation provided in Table 3.1 of the Drainage Design Manual for Maricopa County, $K_b = m\log A + b$.
(2) Sub area altered for the McDowell Road Basin and Storm Drain model.

Table 2. Comparison of Flows Between DDMS and DDMSW.

Subbasin ID	DDMS			DDMSW			Difference
	Q [cfs]	AREA [mi^2]	Runoff [cfs/mi^2]	Q [cfs]	AREA [mi^2]	Runoff [cfs/mi^2]	Q [cfs]
240	1513	1.41	1073	1513	1.41	1073	0
260	427	0.26	1642	427	0.26	1642	0
300	428	0.29	1476	428	0.29	1476	0
C305	1534	1.19	1289	1534	1.19	1289	0
320A	315	0.27	1167	315	0.27	1167	0
360	840	0.88	955	840	0.88	955	0
CC400B	2957	8.76	338	2957	8.76	338	0
C420A	3728	11.09	336	3728	11.09	336	0
455	1418	1.11	1277	1418	1.11	1277	0
CC480	1107	0.73	1516	1107	0.73	1516	0

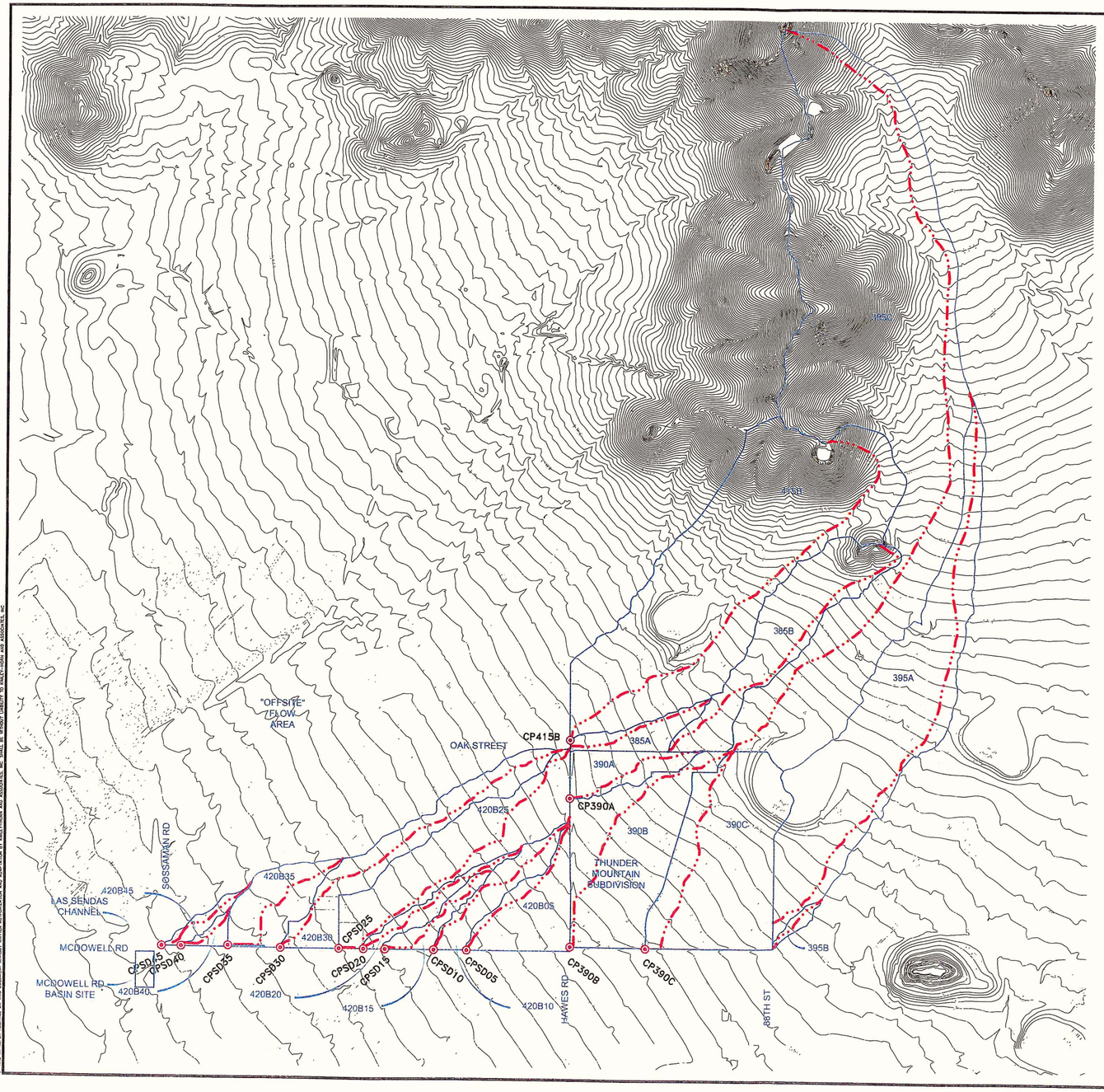

N

GRAPHIC SCALE

600 0 300 600 1200

(IN FEET)

Concentration Point	McDowell Road Basin Q [cfs]	Remarks
CP390C	379	Discharge at CP east of TM driveway on McDowell Rd
TOC-H	104	Diversion to Culver-Hawes system
TO390B	275	Discharge west from diversion
390SD1	N/A	Discharge to Storm Drain collector on McDowell
CP390A	210	
CP415B	1205	Runoff to Oak St basin
S415B	55	Discharge from Oak St basin
CP390B	613	Discharge into Thunder Mtn basin
390B	139	Discharge into Thunder Mtn basin
S390B	519	Discharge from Thunder Mtn basin
CP390	N/A	CP at corner of McDowell and Hawes
CPSD05	559	
CPSD10	581	
CPSD15	589	
CPSD20	600	
CPSD25	615	
CPSD30	658	
CPSD35	694	
CPSD40	698	
CPSD45	704	
MCDB	302	Diversion to McDowell Rd Basin
TOLSCH	402	Flow directly to Las Sendas Channel
CP415A	1436	Flow from "offsite" watershed to north & SD bypass
SMCDB	127	Discharge from McDowell Rd Basin
CPLSCH	1538	Discharge in Las Sendas Channel from McDowell Rd basin and bypass and northern "offsite" watershed

Subbasin ID	Q [CFS]	AREA [SQ MI]	Runoff [CFS/SQ MI]
385C	647	0.50	1291
385B	103	0.08	1338
385A	23	0.02	1278
415B	442	0.28	1601
395A	191	0.19	1032
390C	226	0.12	1868
390B	139	0.10	1376
390A	33	0.02	1375
420B05	62	0.04	1550
420B10	26	0.03	1040
420B15	10	0.01	909
420B20	12	0.01	857
420B25	37	0.08	440
420B30	46	0.06	836
420B35	40	0.03	1176
420B40	6	0.01	1200
420B45	7	0.01	1000

McDowell Basin	
High Water [ft]	9.0
Storage Volume [ac-ft]	6.2
Outlet Pipe	1 - 48-inch

LEGEND

DRAINAGE FLOWPATH

WATERSHED BOUNDARY

SUBBASIN ID NUMBER 395A

CONCENTRATION POINT

CONCENTRATION POINT NUMBER CPSD10

NO.	REVISION	BY	DATE	APPR.

Kimley-Horn and Associates, Inc.

© 2005 KIMLEY-HORN AND ASSOCIATES, INC.

7878 North 16th Street, Suite 300
Phoenix, Arizona 85020 (602) 944-5500

SCALE (H): 1"=1200'
SCALE (V): NONE

DESIGNED BY: PAC
DRAWN BY: MW
CHECKED BY: LSM

DATE: DEC. 2005

MCDOWELL ROAD BASIN AND STORM DRAIN DESIGN

FIGURE 1 - HYDROLOGY WATERSHED MAP

PROJECT NO. 91131012

DRAWING NAME WATERSHED

1 OF 1

K:\Water\Resources\91131012\CADD\Exhibits\WaterRes\watershed_ce.dwg Dec 13, 2006 mohamed.hussein
THIS DRAWING IS THE PROPERTY OF KIMLEY-HORN AND ASSOCIATES, INC. AND MAY NOT BE REPRODUCED OR USED FOR OTHER PURPOSES WITHOUT WRITTEN AUTHORIZATION. SCALE BY: KIMLEY-HORN AND ASSOCIATES, INC. AS SHOWN ON THIS DRAWING IS A REPRESENTATION OF AN ORIGINAL DRAWING. KIMLEY-HORN AND ASSOCIATES, INC. ASSUMES NO RESPONSIBILITY FOR THE ACCURACY OF ANY REPRODUCTION.
XREFS: xTOMichigan
THIS DRAWING IS CONFIDENTIAL AND THE PROPERTY OF KIMLEY-HORN AND ASSOCIATES, INC. ANY REPRODUCTION OR USE FOR ANY PURPOSE OTHER THAN THAT AUTHORIZED BY KIMLEY-HORN AND ASSOCIATES, INC. IS PROHIBITED.

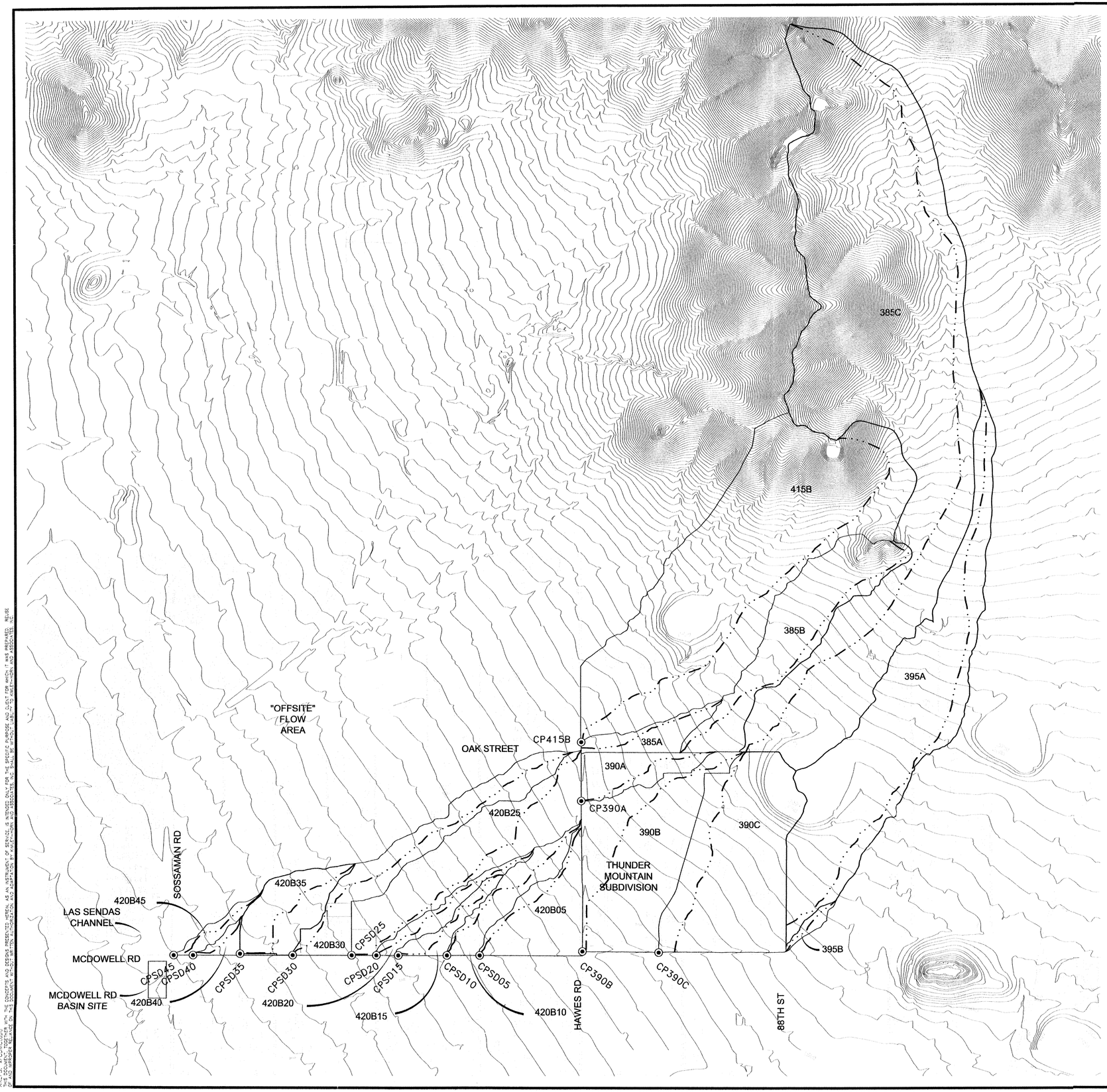

GRAPHIC SCALE

600 0 300 600 1200

(IN FEET)

Concentration Point	McDowell Road Basin Q [cfs]	Remarks
CP390C	379	Discharge at CP east of TM driveway on McDowell Rd
TOC-H	104	Diversion to Culver-Hawes system
TO390B	275	Discharge west from diversion
390SD1	N/A	Discharge to Storm Drain collector on McDowell
CP390A	210	
CP415B	1205	Runoff to Oak St basin
S415B	55	Discharge from Oak St basin
CP390B	613	Discharge into Thunder Mtn basin
390B	139	Discharge into Thunder Mtn basin
S390B	519	Discharge from Thunder Mtn basin
CP390	N/A	CP at corner of McDowell and Hawes
CPSD05	559	
CPSD10	581	
CPSD15	589	
CPSD20	600	
CPSD25	615	
CPSD30	658	
CPSD35	694	
CPSD40	698	
CPSD45	704	
MCDB	302	Diversion to McDowell Rd Basin
TOLSCH	402	Flow directly to Las Sendas Channel
CP415A	1436	Flow from "offsite" watershed to north & SD bypass
SMCDB	127	Discharge from McDowell Rd Basin
CPLSCH	1538	Discharge in Las Sendas Channel from McDowell Rd basin and bypass and northern "offsite" watershed

Subbasin ID	Q [CFS]	AREA [SQ MI]	Runoff [CFS/SQ MI]
385C	647	0.50	1291
385B	103	0.08	1338
385A	23	0.02	1278
415B	442	0.28	1601
395A	191	0.19	1032
390C	226	0.12	1868
390B	139	0.10	1376
390A	33	0.02	1375
420B05	62	0.04	1550
420B10	26	0.03	1040
420B15	10	0.01	909
420B20	12	0.01	857
420B25	37	0.08	440
420B30	46	0.06	836
420B35	40	0.03	1176
420B40	6	0.01	1200
420B45	7	0.01	1000

McDowell Basin	
High Water [ft]	9.0
Storage Volume [ac-ft]	6.2
Outlet Pipe	1 - 48-inch

LEGEND

DRAINAGE FLOWPATH

WATERSHED BOUNDARY

SUBBASIN ID NUMBER — 395A

CONCENTRATION POINT

CONCENTRATION POINT NUMBER — CPSD10

NO.	REVISION	BY	DATE	APPR.

Kimley-Horn and Associates, Inc.

© 2005 KIMLEY-HORN AND ASSOCIATES, INC.

7878 North 16th Street, Suite 300
Phoenix, Arizona 85020 (602) 944-5500

SCALE (H): 1"=1200'
SCALE (V): NONE

DESIGNED BY: PAC
DRAWN BY: JWH
CHECKED BY: LSM

DATE: DEC. 2005

MCDOWELL ROAD BASIN AND STORM DRAIN DESIGN

FIGURE 1 - HYDROLOGY WATERSHED MAP

PROJECT NO. 91131012

DRAWING NAME WATERSHED

K:\NewPrRes\Resources\91131012\CADD\Exhibits\WatRes\watershed_co.dwg Dec 13, 2006 mohamed.hussein
KIMLEY-HORN AND ASSOCIATES, INC.
THIS DOCUMENT, TOGETHER WITH THE CONCEPTS AND DESIGNS PRESENTED HEREIN, AS AN INSTRUMENT OF SERVICE, IS INTENDED ONLY FOR THE SPECIFIC PURPOSE AND CLIENT FOR WHICH IT WAS PREPARED. REUSE OF AND IMPROPER RELIANCE ON THIS DOCUMENT WITHOUT WRITTEN AUTHORIZATION AND ADAPTATION BY KIMLEY-HORN AND ASSOCIATES, INC. SHALL BE WITHOUT LIABILITY TO KIMLEY-HORN AND ASSOCIATES, INC.

```
1****************************************
*                                      *
*   FLOOD HYDROGRAPH PACKAGE  (HEC-1)  *
*             JUN   1998               *
*           VERSION 4.1                *
*                                      *
*  RUN DATE   10APR06  TIME  14:28:38  *
*                                      *
****************************************
```

```
****************************
*                          *
*   U.S. ARMY CORPS OF ENG
*   HYDROLOGIC ENGINEERING
*         609 SECOND STREE
*      DAVIS, CALIFORNIA 9
*          (916) 756-1104
*                          *
****************************
```

```
X     X  XXXXXXX   XXXXX          X
X     X  X        X     X        XX
X     X  X        X              X
XXXXXXX  XXXX     X        XXXXX X
X     X  X        X              X
X     X  X        X     X        X
X     X  XXXXXXX   XXXXX        XXX
```

THIS PROGRAM REPLACES ALL PREVIOUS VERSIONS OF HEC-1 KNOWN AS HEC1 (JAN 73), HEC1GS, HEC1DB, AND HEC1KW.

THE DEFINITIONS OF VARIABLES -RTIMP- AND -RTIOR- HAVE CHANGED FROM THOSE USED WITH THE 1973-STYLE INPUT STRU
THE DEFINITION OF -AMSKK- ON RM-CARD WAS CHANGED WITH REVISIONS DATED 28 SEP 81. THIS IS THE FORTRAN77 VERSI
NEW OPTIONS: DAMBREAK OUTFLOW SUBMERGENCE , SINGLE EVENT DAMAGE CALCULATION, DSS:WRITE STAGE FREQUENCY,
DSS:READ TIME SERIES AT DESIRED CALCULATION INTERVAL LOSS RATE:GREEN AND AMPT INFILTRATION
KINEMATIC WAVE: NEW FINITE DIFFERENCE ALGORITHM

1 HEC-1 INPUT PAGE 1

```
LINE          ID.......1.......2.......3.......4.......5.......6.......7.......8.......9......10

  1           ID   McDowell Road Basin and Storm Drain Design
  2           ID   This model assumes that the Oak Street detention basin is installed,
  3           ID   and all flows pass through the Thunder Mountain detention basin.
  4           ID
  5           ID   The Spook Hill ADMP model was uded as a base for this model
  6           ID   Return Period = 100 Years, Rainfall Duration = 24 Hours
  7           ID
  8           ID   METHODOLOGY
  9           ID   THE US CORPS OF ENGINEERS FLOW HYDROGRAPH PACKAGE HEC-1 DATED JUNE 1998 V4.1
 10           ID   SCS TYPE II RAINFALL DISTRIBUTION
 11           ID   CLARK UNIT HYDROGRAPH
 12           ID   GREEN AND AMPT INFILTRATION EQUATION USED FOR CALCULATING LOSSES
 13           ID   NORMAL DEPTH STORAGE CHANNEL ROUTING
              *
              *DIAGRAM
 14           IT       2                    2000
 15           IO       5
 16           IN      15
 17           JD    3.81    0.01
 18           PC    .000    .002    .005    .008    .011    .014    .017    .020    .023    .026
 19           PC    .029    .032    .035    .038    .041    .044    .048    .052    .056    .060
 20           PC    .064    .068    .072    .076    .080    .085    .090    .095    .100    .105
 21           PC    .110    .115    .120    .126    .133    .140    .147    .155    .163    .172
 22           PC    .181    .191    .203    .218    .236    .257    .283    .387    .663    .707
 23           PC    .735    .758    .776    .791    .804    .815    .825    .834    .842    .849
 24           PC    .856    .863    .869    .875    .881    .887    .893    .898    .903    .908
 25           PC    .913    .918    .922    .926    .930    .934    .938    .942    .946    .950
 26           PC    .953    .956    .959    .962    .965    .968    .971    .974    .977    .980
 27           PC    .983    .986    .989    .992    .995    .998   1.000
 28           JD   3.787    1.00
 29           JD   3.677    5.80
 30           JD   3.574   10.66
 31           JD   3.539   13.70
 32           JD   3.467   20.00
 33           JD   3.315   50.00
              *
              * DDM   ***** Updated *****

 34           KK      10
 35           KM   SUB-BASIN 10
 36           KM   24-HOUR SCS TYPE II RAINFALL WAS USED TO FIND TC & R FOR THIS BASIN
 37           KM   THIS BASIN USED RAINFALL REDUCTION FACTOR OF  .996
 38           KM     L = 2.00  Kb = .044  Adj. Slope =  165.0
 39           BA    .690
 40           LG    .350    .310   7.600    .090  16.000
 41           UC    .421    .305
 42           UA       0       3       5       8      12      20      43      75      90      96
 43           UA     100
              *
              * DDM   ***** Preserved *****
```

```
LINE          ID.......1.......2.......3.......4.......5.......6.......7.......8.......9......10

 44           KK     R10
 45           KM   ROUTING OF FLOW FROM SUB-BASIN 10 TO R12
 46           RS       4    FLOW      -1
 47           RC    .045     .03    .045    8700    .021
 48           RX       0       1       2      17      27      42      43      44
 49           RY       5       5       5       0       0       5       5       5
              * DDM   ***** Preserved *****

 50           KK     R12
 51           KM   ROUTING OF FLOW FROM R12 TO SUB-BASIN 20
 52           RS       7    FLOW      -1
 53           RC    .045     .03    .045    4500     .01
 54           RX       0       1      45    52.5    72.5      80     124     125
 55           RY       4     2.5     2.5       0       0     2.5     2.5       4
              * DDM   ***** Updated *****

 56           KK      20
 57           KM   SUB-BASIN 20
 58           KM   24-HOUR SCS TYPE II RAINFALL WAS USED TO FIND TC & R FOR THIS BASIN
 59           KM   THIS BASIN USED RAINFALL REDUCTION FACTOR OF  .993
 60           KM     L = 2.50  Kb = .040  Adj. Slope =   88.0
 61           BA   1.167
 62           LG    .310    .290   5.800    .220  11.000
 63           UC    .629    .422
 64           UA       0       5      16      30      65      77      84      90      94      97
 65           UA     100
              * DDM   ***** Preserved *****

 66           KK     D20
 67           KM        100-YEAR 2-HOUR ONSITE RETENTION BASIN
 68           KM        MAXIMUM VOLUME DIVERSION = 47.8 acre-feet
 69           DT    BS20    47.8
 70           DI       0   10000
 71           DQ       0   10000
              * DDM   ***** Preserved *****

 72           KK    RT20
 73           KM   RETRIEVE FLOW FROM DIVERSION INTO ONLINE BASIN
 74           DR    BS20
              * DDM   ***** Preserved *****

 75           KK     S20
 76           KM   RETRIEVE FLOW INTO FICTICIOUS BASIN AND BLEED OFF WITHIN 36 HOURS.
 77           KM   BLEEDOFF FLOW = 17 CFS
 78           RS       1    STOR       0
 79           SV       0     .01    47.8      70
 80           SQ       0     0.5    17.0      50
              * DDM   ***** Preserved *****
1                                   HEC-1 INPUT                                          PAGE  3

LINE          ID.......1.......2.......3.......4.......5.......6.......7.......8.......9......10

 81           KK     C20
 82           KM   HYDROGRAPH COMBINATION
 83           HC       3
              * DDM   ***** Preserved *****

 84           KK     R20
 85           KM        ROUTE FLOW THROUGH BULLDOG FLOODWAY FROM APACHE JUNCTION FRS
 86           RS       1    FLOW      -1
 87           RC    .016    .016    .016     990    .004
 88           RX       0       5       7    14.5    34.5      42      44      50
 89           RY       4       2       2       0       0       2       2       4
              * DDM   ***** Updated *****

 90           KK      40
 91           KM   SUB-BASIN 40
 92           KM   24-HOUR SCS TYPE II RAINFALL WAS USED TO FIND TC & R FOR THIS BASIN
 93           KM   THIS BASIN USED RAINFALL REDUCTION FACTOR OF  .987
 94           KM     L = 3.08  Kb = .036  Adj. Slope =  189.0
 95           BA   2.227
 96           LG    .320    .300   4.900    .310  11.000
 97           UC    .492    .262
 98           UA       0       3       5       8      12      20      43      75      90      96
 99           UA     100
              * DDM   ***** Preserved *****

100           KK     D40
101           KM        100-YEAR 2-HOUR ONSITE RETENTION BASIN
102           KM        MAXIMUM VOLUME DIVERSION = 39.1 acre-feet
103           DT    BS40    39.1
104           DI       0   10000
105           DQ       0   10000
              * DDM   ***** Preserved *****

106           KK    RT40
```

```
107          KM   RETRIEVE FLOW FROM DIVERSION INTO ONLINE BASIN
108          DR    BS40
             * DDM   ***** Preserved *****

109          KK     S40
110          KM   RETRIEVE FLOW INTO FICTICIOUS BASIN AND BLEED OFF WITHIN 36 HOURS.
111          KM   BLEEDOFF FLOW = 14 CFS
112          RS       1    STOR       0
113          SV       0     .01    39.1     60
114          SQ       0     0.5    14.0     40
             * DDM   ***** Preserved *****

115          KK     C40
116          KM   HYDROGRAPH COMBINATION
117          HC       3
             * DDM   ***** Updated *****
1                                    HEC-1 INPUT                                                    PAGE  4

LINE         ID.......1.......2.......3.......4.......5.......6.......7.......8.......9......10

118          KK      60
119          KM   SUB-BASIN 60
120          KM   24-HOUR SCS TYPE II RAINFALL WAS USED TO FIND TC & R FOR THIS BASIN
121          KM   THIS BASIN USED RAINFALL REDUCTION FACTOR OF  .989
122          KM     L = 4.19  Kb = .038  Adj. Slope =  209.6
123          BA   1.751
124          LG    .320    .340   5.800    .190  10.000
125          UC    .592    .472
126          UA      0       3       5       8      12      20      43      75      90      96
127          UA     100
             *
             * DDM   ***** Preserved *****

128          KK     D60
129          KM        100-YEAR 2-HOUR ONSITE RETENTION BASIN
130          KM        MAXIMUM VOLUME DIVERSION = 4.60 acre-feet
131          DT    BS60     4.6
132          DI       0   10000
133          DQ       0   10000
             * DDM   ***** Preserved *****

134          KK    RT60
135          KM   RETRIEVE FLOW FROM DIVERSION INTO ONLINE BASIN
136          DR    BS60
             * DDM   ***** Preserved *****

137          KK    SB60
138          KM   RETRIEVE FLOW INTO FICTICIOUS BASIN AND BLEED OFF WITHIN 36 HOURS.
139          KM   BLEEDOFF FLOW = 2 CFS
140          RS       1    STOR       0
141          SV       0     .01     4.6     10
142          SQ       0     0.5     2.0     10
             * DDM   ***** Preserved *****

143          KK     C60
144          KM   HYDROGRAPH COMBINATION
145          HC       3
             *
             * DDM   ***** Preserved *****

146          KK     S60
147          KM   APACHE JUNCTION FRS AS-BUILT PLANS 12/19/88
148          KM   OUTLET PIPE=30"RCP; L=136.6'; INLET INV.=1783.5; OUTLET INV.=1783
149          KM   EMERGENCY SPILLWAY ELEV.=1799.77'; PRINCIPAL SPILLWAY ELEV.=1793.5'
150          KM   STORAGE VOLUME BELOW PRINCIPAL SPILLWAY FOR SEDIMENT = 100 ACRE-FEET
             *  ESE = 1799.77 ft; PSE = 1793.5 ft; Sediment Vol. = 130 Ac-Ft.
151          RS       1    STOR       0
152          SV       0    46.8     106     130   161.2   170.7   230.7   322.2     543   812.9
153          SV    1122  1470.1    1865
154          SQ       0    0.01    0.02    26.3    74.4    91.2    96.2   102.4   113.9    1650
155          SQ    7700   15200   26200
156          SE   791.4     793   794.1   794.5     795   795.1     796   797.1   799.4   801.7
157          SE     804   806.3   808.6
             * DDM   ***** Preserved *****
1                                    HEC-1 INPUT                                                    PAGE  5

LINE         ID.......1.......2.......3.......4.......5.......6.......7.......8.......9......10

158          KK     R60
159          KM        ROUTE FLOW THROUGH BULLDOG FLOODWAY FROM APACHE JUNCTION FRS
160          RS       2    FLOW      -1
161          RC    .016    .016    .016    2850    .012
162          RX       0       1       2     2.1     5.6     5.7       6       7
163          RY     4.5     3.5     3.5       0       0     3.5     3.5     4.5
             * DDM   ***** Preserved *****

164          KK    RR60
165          KM   ROUTE FLOW FROM BULLDOG FLOODWAY TO SUB-BASIN 80
```

```
166          RS       3    FLOW      -1
167          RC    .016    .016    .016    3500    .005
168          RX       0       1       2     2.1     7.1     7.2       8       9
169          RY     4.5     3.5     3.5       0       0     3.5     3.5     4.5
             * DDM   ***** Updated *****

170          KK      80
171          KM   SUB-BASIN 80
172          KM   24-HOUR SCS TYPE II RAINFALL WAS USED TO FIND TC & R FOR THIS BASIN
173          KM   THIS BASIN USED RAINFALL REDUCTION FACTOR OF  .991
174          KM     L = 2.69  Kb = .039  Adj. Slope =  229.8
175          BA   1.493
176          LG    .320    .300   5.600    .220   7.000
177          UC    .429    .254
178          UA       0       5      16      30      65      77      84      90      94      97
179          UA     100
             * DDM   ***** Preserved *****

180          KK     D80
181          KM        100-YEAR 2-HOUR ONSITE RETENTION BASIN
182          KM        MAXIMUM VOLUME DIVERSION = 18.9 acre-feet
183          DT    BS80    18.9
184          DI       0   10000
185          DQ       0   10000
             * DDM   ***** Preserved *****

186          KK    RT80
187          KM   RETRIEVE FLOW FROM DIVERSION INTO ONLINE BASIN
188          DR    BS80
             * DDM   ***** Preserved *****

189          KK     S80
190          KM   RETRIEVE FLOW INTO FICTICIOUS BASIN AND BLEED OFF WITHIN 36 HOURS.
191          KM   BLEEDOFF FLOW =  7 CFS
192          RS       1    STOR       0
193          SV       0     .01    18.9      30
194          SQ       0     1.0     7.0      20
             * DDM   ***** Preserved *****
1                                    HEC-1 INPUT                                    PAGE  6

LINE         ID.......1.......2.......3.......4.......5.......6.......7.......8.......9......10

195          KK     C80
196          KM   HYDROGRAPH COMBINATION
197          HC       2
             * DDM   ***** Preserved *****

198          KK    CC80
199          KM   HYDROGRAPH COMBINATION FOR FLOW FROM APACHE JUNCTION FRS & SUB-BASIN 80
200          HC       2   1.493
             * DDM   ***** Preserved *****

201          KK     R80
202          KM   ROUTE FLOW FROM SUB-BASIN 80 TO SUB-BASIN 100
203          RS       2    FLOW      -1
204          RC    .025    .016    .025    1200    .003
205          RX       0       2       6     6.1    41.1    41.2    56.2    58.2
206          RY     5.5     4.5     4.5       0       0     4.5     4.5     5.5
             * DDM   ***** Updated *****

207          KK     100
208          KM   SUB-BASIN 100
209          KM   24-HOUR SCS TYPE II RAINFALL WAS USED TO FIND TC & R FOR THIS BASIN
210          KM   THIS BASIN USED RAINFALL REDUCTION FACTOR OF  .997
211          KM     L = 1.94  Kb = .045  Adj. Slope =  108.0
212          BA    .488
213          LG    .300    .250   5.100    .280   9.000
214          UC    .517    .455
215          UA       0       5      16      30      65      77      84      90      94      97
216          UA     100
             * DDM   ***** Preserved *****

217          KK    D100
218          KM        100-YEAR 2-HOUR ONSITE RETENTION BASIN
219          KM        MAXIMUM VOLUME DIVERSION = 10.0 acre-feet
220          DT   BS100    10.0
221          DI       0   10000
222          DQ       0   10000
             * DDM   ***** Preserved *****

223          KK   RT100
224          KM   RETRIEVE FLOW FROM DIVERSION INTO ONLINE BASIN
225          DR   BS100
             * DDM   ***** Preserved *****

226          KK    S100
227          KM   RETRIEVE FLOW INTO FICTICIOUS BASIN AND BLEED OFF WITHIN 36 HOURS.
228          KM   BLEEDOFF FLOW =  4 CFS
229          RS       1    STOR       0
```

```
230          SV       0     .01    10.0     20
231          SQ       0     1.0     4.0     10
             * DDM   ***** Preserved *****
                                   HEC-1 INPUT                                                    PAGE  7
LINE         ID.......1.......2.......3.......4.......5.......6.......7.......8.......9......10

232          KK    C100
233          KM   HYDROGRAPH COMBINATION FOR FLOW FROM SUB-BASIN 80 & 100
234          HC       3
             * DDM   ***** Preserved *****

235          KK    R100
236          KM   ROUTE FLOW FROM SUB-BASIN 100 TO SUB-BASIN 120
237          RS       1    FLOW      -1
238          RC    .016    .016    .016     940    .004
239          RX       0       1       2     2.1    52.1    52.2      53      54
240          RY     4.5     4.5     4.5       0       0     4.5     4.5     4.5
             * DDM   ***** Updated *****

241          KK     120
242          KM   SUB-BASIN 120
243          KM   24-HOUR SCS TYPE II RAINFALL WAS USED TO FIND TC & R FOR THIS BASIN
244          KM   THIS BASIN USED RAINFALL REDUCTION FACTOR OF  .987
245          KM     L = 3.07  Kb = .037  Adj. Slope =  239.0
246          BA   2.197
247          LG    .330    .280   6.800    .130  12.000
248          UC    .429    .227
249          UA       0       3       5       8      12      20      43      75      90      96
250          UA     100
             * DDM   ***** Preserved *****

251          KK    D120
252          KM        100-YEAR 2-HOUR ONSITE RETENTION BASIN
253          KM        MAXIMUM VOLUME DIVERSION = 5.7 acre-feet
254          DT   BS120     5.7
255          DI       0   10000
256          DQ       0   10000
             * DDM   ***** Preserved *****

257          KK   RT120
258          KM   RETRIEVE FLOW FROM DIVERSION INTO ONLINE BASIN
259          DR   BS120
             * DDM   ***** Preserved *****

260          KK    S120
261          KM   RETRIEVE FLOW INTO FICTICIOUS BASIN AND BLEED OFF WITHIN 36 HOURS.
262          KM   BLEEDOFF FLOW =  2 CFS
263          RS       1    STOR       0
264          SV       0     .01     5.7     15
265          SQ       0     1.0     2.0     10
             * DDM   ***** Preserved *****

266          KK    C120
267          KM   HYDROGRAPH COMBINATION FOR FLOW FROM SUB-BASIN 100 & 120
268          HC       3
             * DDM   ***** Preserved *****
1                                  HEC-1 INPUT                                                    PAGE  8
LINE         ID.......1.......2.......3.......4.......5.......6.......7.......8.......9......10

269          KK    R120
270          KM   ROUTE FLOW FROM SUB-BASIN 120 TO SIGNAL BUTTE FRS
271          RS       2    FLOW      -1
272          RC    .025    .016    .025    2100    .005
273          RX       0       6      10    10.1    60.1    60.2    74.2    80.2
274          RY       8       5       5       0       0       5       5       8
             * DDM   ***** Updated *****

275          KK     140
276          KM   SUB-BASIN 140
277          KM   24-HOUR SCS TYPE II RAINFALL WAS USED TO FIND TC & R FOR THIS BASIN
278          KM   THIS BASIN USED RAINFALL REDUCTION FACTOR OF  .996
279          KM     L = 1.61  Kb = .044  Adj. Slope =  149.0
280          BA    .598
281          LG    .310    .280   4.200    .440   5.000
282          UC    .421    .278
283          UA       0       5      16      30      65      77      84      90      94      97
284          UA     100
             *
             * DDM   ***** Preserved *****

285          KK    D140
286          KM        100-YEAR 2-HOUR ONSITE RETENTION BASIN
287          KM        MAXIMUM VOLUME DIVERSION = 5.9 acre-feet
288          DT   BS140     5.9
289          DI       0   10000
290          DQ       0   10000
```

```
                * DDM    ***** Preserved *****

291             KK    RT140
292             KM    RETRIEVE FLOW FROM DIVERSION INTO ONLINE BASIN
293             DR    BS140
                * DDM    ***** Preserved *****

294             KK     S140
295             KM    RETRIEVE FLOW INTO FICTICIOUS BASIN AND BLEED OFF WITHIN 36 HOURS.
296             KM    BLEEDOFF FLOW =  2 CFS
297             RS        1     STOR       0
298             SV        0      .01      5.9      15
299             SQ        0      1.0      2.0      10
                *
                * DDM    ***** Preserved *****

300             KK     C140
301             KM    HYDROGRAPH COMBINATION
302             HC        3
                *
                * DDM    ***** Updated *****
1                                          HEC-1 INPUT                                                    PAGE  9

LINE            ID.......1.......2.......3.......4.......5.......6.......7.......8.......9......10


303             KK      150
304             KM    SUB-BASIN 150
305             KM    24-HOUR SCS TYPE II RAINFALL WAS USED TO FIND TC & R FOR THIS BASIN
306             KM    THIS BASIN USED RAINFALL REDUCTION FACTOR OF  .998
307             KM      L = 1.50  Kb = .047  Adj. Slope =  314.6
308             BA     .407
309             LG     .350     .360    5.100     .260    7.000
310             UC     .296     .221
311             UA        0        3        5        8       12       20       43       75       90       96
312             UA      100
                * DDM    ***** Preserved *****

313             KK     R150
314             KM    ROUTING OF FLOW FROM SUB-BASIN 150 TO R152
315             RS        2     FLOW       -1
316             RC     .045      .04     .045     3100     .032
317             RX        0        1        2       23       33       54       55       56
318             RY        7        7        7        0        0        7        7        7
                * DDM    ***** Preserved *****

319             KK     R152
320             KM    ROUTING OF FLOW FROM R152 TO SUB-BASIN 160
321             RS        3     FLOW       -1
322             RC     .045      .03     .045     5900     .019
323             RX        0        1        2        8       33       39       40       41
324             RY        2        2        2        0        0        2        2        2
                * DDM    ***** Updated *****

325             KK      160
326             KM    SUB-BASIN 160
327             KM    24-HOUR SCS TYPE II RAINFALL WAS USED TO FIND TC & R FOR THIS BASIN
328             KM    THIS BASIN USED RAINFALL REDUCTION FACTOR OF  .998
329             KM      L = 2.10  Kb = .047  Adj. Slope =  129.0
330             BA     .365
331             LG     .340     .330    4.150     .440    1.000
332             UC     .587     .659
333             UA        0        3        5        8       12       20       43       75       90       96
334             UA      100
                *
                * DDM    ***** Preserved *****

335             KK     D160
336             KM         100-YEAR 2-HOUR ONSITE RETENTION BASIN
337             KM         MAXIMUM VOLUME DIVERSION = 1.2 acre-feet
338             DT    BS160      1.2
339             DI        0    10000
340             DQ        0    10000
                * DDM    ***** Preserved *****
1                                          HEC-1 INPUT                                                    PAGE 10

LINE            ID.......1.......2.......3.......4.......5.......6.......7.......8.......9......10


341             KK    RT160
342             KM    RETRIEVE FLOW FROM DIVERSION INTO ONLINE BASIN
343             DR    BS160
                * DDM    ***** Preserved *****

344             KK     S160
345             KM    RETRIEVE FLOW INTO FICTICIOUS BASIN AND BLEED OFF WITHIN 36 HOURS.
346             KM    BLEEDOFF FLOW =  1 CFS
347             RS        1     STOR       0
348             SV        0      .01      1.2      10
349             SQ        0      0.5      1.0      10
```

```
                * DDM   ***** Preserved *****

350             KK    C160
351             KM   HYDROGRAPH COMBINATION
352             HC       3
                *
                * DDM   ***** Updated *****

353             KK     180
354             KM   SUB-BASIN 180
355             KM   24-HOUR SCS TYPE II RAINFALL WAS USED TO FIND TC & R FOR THIS BASIN
356             KM   THIS BASIN USED RAINFALL REDUCTION FACTOR OF  .994
357             KM     L = 2.42  Kb = .041  Adj. Slope =  140.0
358             BA   1.014
359             LG    .350    .350   4.150    .430    .000
360             UC    .571    .400
361             UA       0       3       5       8      12      20      43      75      90      96
362             UA     100
                * DDM   ***** Preserved *****

363             KK    C180
364             KM   HYDROGRAPH COMBINATION FOR SIGNAL BUTTE FRS
365             HC       3
                * DDM   ***** Updated *****

366             KK     210
367             KM   SUB-BASIN 210
368             KM   24-HOUR SCS TYPE II RAINFALL WAS USED TO FIND TC & R FOR THIS BASIN
369             KM   THIS BASIN USED RAINFALL REDUCTION FACTOR OF  .995
370             KM     L = 1.84  Kb = .043  Adj. Slope =  315.0
371             BA    .792
372             LG    .350    .360   6.800    .130   4.000
373             UC    .313    .189
374             UA       0       3       5       8      12      20      43      75      90      96
375             UA     100
                * DDM   ***** Preserved *****

376             KK    R210
377             KM   ROUTING OF FLOW FROM SUB-BASIN 210 TO SUB-BASIN 220
378             RS       2    FLOW      -1
379             RC    .045     .03    .045    5100    .022
380             RX       0       1       2      14      34      46      47      48
381             RY       4       4       4       0       0       4       4       4
                * DDM   ***** Updated *****
1                                          HEC-1 INPUT                                          PAGE 11

LINE            ID.......1.......2.......3.......4.......5.......6.......7.......8.......9......10

382             KK     240
383             KM   SUB-BASIN 240
384             KM   24-HOUR SCS TYPE II RAINFALL WAS USED TO FIND TC & R FOR THIS BASIN
385             KM   THIS BASIN USED RAINFALL REDUCTION FACTOR OF  .992
386             KM     L = 3.50  Kb = .039  Adj. Slope =  298.6
387             BA   1.408
388             LG    .350    .370   5.300    .230   2.000
389             UC    .467    .356
390             UA       0       3       5       8      12      20      43      75      90      96
391             UA     100
                * DDM   ***** Preserved *****

392             KK    C240
393             KM   HYDROGRAPH COMBINATION FOR SUB-BASIN 240 & 220
394             HC       2
                * DDM   ***** Preserved *****

395             KK    S240
396             KM    WEIR GEOMETRY OBTAINED FROM AS-BUILT PLANS @ PASS MTN. DIVERSION.
397             KM   WEIR STORAGE DATA OBTAINED FROM 2' CONTOUR MAPPING.
398             RS       1    STOR       0
399             SA    1.38    14.2    36.5
400             SE     1.7       5      11
401             SS       5      42       3     1.5
                * DDM   ***** Preserved *****

402             KK    R240
403             KM   ROUTE FLOW FROM SUB-BASIN 240 TO SUB-BASIN 220
404             KM   PASS MOUNTAIN DIVERSION
405             RS       1    FLOW      -1
406             RC    .035    .025    .035    1800    .005
407             RX       0      15      30      39      69      81      96     111
408             RY     3.6     3.3       3       0       0       3       3       4
                * DDM   ***** Updated *****

409             KK     220
410             KM   SUB-BASIN 220
411             KM   24-HOUR SCS TYPE II RAINFALL WAS USED TO FIND TC & R FOR THIS BASIN
412             KM   THIS BASIN USED RAINFALL REDUCTION FACTOR OF  .997
413             KM     L = 1.92  Kb = .046  Adj. Slope =  315.0
414             BA    .473
```

```
415          LG    .350    .350   7.000    .120   5.000
416          UC    .333    .282
417          UA       0       3       5       8      12      20      43      75      90      96
418          UA     100
             * DDM   ***** Preserved *****

419          KK    C220
420          KM   HYDROGRAPH COMBINATION FOR SUB-BASIN 240 & 220
421          HC       2
             * DDM   ***** Preserved *****
1                                    HEC-1 INPUT                                          PAGE 12

LINE         ID.......1.......2.......3.......4.......5.......6.......7.......8.......9......10

422          KK   SW220
423          KM    WEIR GEOMETRY OBTAINED FROM AS-BUILT PLANS @ PASS MTN. DIVERSION.
424          KM   WEIR STORAGE DATA OBTAINED FROM 2' CONTOUR MAPPING.
425          RS       1    STOR       0
426          SA     .78     4.1    13.7
427          SE       1       3      10
428          SS       3      65       3     1.5
             * DDM   ***** Preserved *****

429          KK    R220
430          KM   ROUTE FLOW FROM SUB-BASIN 220 TO SUB-BASIN 200
431          KM   PASS MOUNTAIN DIVERSION
432          RS       1    FLOW      -1
433          RC    .035    .025    .035    1250    .005
434          RX       0      50     100     109     139     148     178     184
435          RY       5       4       3       0       0       3       3       5
             * DDM   ***** Updated *****

436          KK     190
437          KM   SUB-BASIN 190
438          KM   24-HOUR SCS TYPE II RAINFALL WAS USED TO FIND TC & R FOR THIS BASIN
439          KM   THIS BASIN USED RAINFALL REDUCTION FACTOR OF  .994
440          KM     L = 1.91  Kb = .042  Adj. Slope =  315.0
441          BA    .918
442          LG    .350    .390   5.800    .190   8.000
443          UC    .321    .185
444          UA       0       3       5       8      12      20      43      75      90      96
445          UA     100
             * DDM   ***** Preserved *****

446          KK    R190
447          KM   ROUTING OF FLOW FROM SUB-BASIN 190 TO SUB-BASIN 200
448          RS       2    FLOW      -1
449          RC    .045     .03    .045    4740     .03
450          RX       0       1       2      17      37      52      53      54
451          RY       5       5       5       0       0       5       5       5
             * DDM   ***** Preserved *****

452          KK    R192
453          KM   ROUTING OF FLOW FROM SUB-BASIN 190 TO SUB-BASIN 200
454          RS       3    FLOW      -1
455          RC    .045    .035    .045    2200    .018
456          RX       0       1      50      59      79      88     137     138
457          RY     4.5       3       3       0       0       3       3     4.5
             * DDM   ***** Updated *****

458          KK     200
459          KM   SUB-BASIN 200
460          KM   24-HOUR SCS TYPE II RAINFALL WAS USED TO FIND TC & R FOR THIS BASIN
461          KM   THIS BASIN USED RAINFALL REDUCTION FACTOR OF  .997
462          KM     L = 1.58  Kb = .045  Adj. Slope =  305.6
463          BA    .530
464          LG    .350    .390   5.700    .200  10.000
465          UC    .300    .201
1                                    HEC-1 INPUT                                          PAGE 13

LINE         ID.......1.......2.......3.......4.......5.......6.......7.......8.......9......10

466          UA       0       3       5       8      12      20      43      75      90      96
467          UA     100
             * DDM   ***** Preserved *****

468          KK    C200
469          KM   HYDROGRAPH COMBINATION FOR SUB-BASIN 220 & 200
470          HC       3
             * DDM   ***** Preserved *****

471          KK   SW200
472          KM    WEIR GEOMETRY OBTAINED FROM AS-BUILT PLANS @ PASS MTN. DIVERSION.
473          KM   WEIR STORAGE DATA OBTAINED FROM 2' CONTOUR MAPPING.
474          RS       1    STOR       0
475          SA    2.56     3.1     9.4
476          SE       0       3      10
477          SS       3     112       3     1.5
             * DDM   ***** Preserved *****
```

```
478          KK    R200
479          KM   ROUTE FLOW FROM SUB-BASIN 200 TO SIGNAL BUTTE FRS through storage
480          RS       1    FLOW      -1
481          RC    .035    .025    .035     650    .005
482          RX       0       1       2      17     117     132     133     134
483          RY       5       5       5       0       0       5       5       5
             * DDM   ***** Preserved *****

484          KK   SS200
485          KM    WEIR GEOMETRY OBTAINED FROM AS-BUILT PLANS @ PASS MTN. DIVERSION.
486          KM   WEIR STORAGE DATA OBTAINED FROM 2' CONTOUR MAPPING.
487          RS       1    STOR       0
488          SA       8     9.2     9.2
489          SE       0       7      10
490          SS       7     251       3     1.5
             * DDM   ***** Preserved *****

491          KK   RR200
492          KM   ROUTE FLOW FROM SUB-BASIN 200 TO SIGNAL BUTTE FRS
493          RS       4    FLOW      -1
494          RC    .035    .025    .035    3150    .005
495          RX       0       1       2      17     117     132     133     134
496          RY       5       5       5       0       0       5       5       5
             * DDM   ***** Preserved *****

497          KK   CC180
498          KM   HYDROGRAPH COMBINATION FOR SIGNAL BUTTE FRS
499          HC       2
             * DDM   ***** Preserved *****

500          KK    S180
501          KM   SIGNAL BUTTE FRS DATED 1/28/85
502          KM   OUTLET PIPE=36"RCP; L= 147';  INLET INV.=1690; OUTLET INV.=1687
503          KM   EMERGENCY SPILLWAY ELEV.=1712.4; PRINCIPAL SPILLWAY ELEV.=1701
504          KM   STORAGE VOLUME BELOW PRINCIPAL SPILLWAY FOR SEDIMENT = 250 ACRE-FEET
             *  ESE = 1712.4 ft; PSE = 1701.0 ft; Sediment Vol. = 247 Ac-Ft.
505          RS       1    STOR       0
```



```
LINE         ID.......1.......2.......3.......4.......5.......6.......7.......8.......9......10

506          SV       0   172.1   273.3   482.2   871.3  1101.5  1163.5  1294.1  1390.2  1432.1
507          SV  1446.1  1578.8  1733.6  1980.3  2712.2    3121    3530
508          SQ       0    10.2    10.7   121.8   138.4   145.9   147.7   151.4     154     155
509          SQ     156     390     820    1950    6600    9500   12400
510          SE     696     700   701.4     704     708     710   710.5   711.5   712.2   712.5
511          SE   712.6   713.5   714.5     716     720     722     724
             * DDM   ***** Preserved *****

512          KK    R180
513          KM   Routing length updated using Signal Butte Floodway plans dated March 1983
514          KM   Routing length increased 100' from 1500' to 1600'    12/12/00
515          KM   CHANNEL GEOMETRY FOR SIGNAL BUTTE FRS OBTAINED FROM AS-BUILT PLANS.
516          KM   ROUTE FLOW FROM SIGNAL BUTTE FRS TO SUB-BASIN 260
517          RS       1    FLOW      -1
518          RC    .035    .025    .035    1600    .003
519          RX       0       1       2    22.6    38.6    59.2      60      61
520          RY     9.3     9.3     9.3       0       0     9.3     9.3     9.3
             * DDM   ***** Updated *****

521          KK     260
522          KM   SUB-BASIN 260
523          KM   24-HOUR SCS TYPE II RAINFALL WAS USED TO FIND TC & R FOR THIS BASIN
524          KM   THIS BASIN USED RAINFALL REDUCTION FACTOR OF  .998
525          KM     L =  .81  Kb = .046  Adj. Slope =   68.0
526          BA    .263
527          LG    .280    .210   6.600    .160  11.000
528          UC    .350    .209
529          UA       0       5      16      30      65      77      84      90      94      97
530          UA     100
             * DDM   ***** Preserved *****

531          KK    C260
532          KM   HYDROGRAPH COMBINATION FOR OUTFLOW OF SIGNAL BUTTE FRS & SUB-BASIN 260
533          HC       2    .263
             * DDM   ***** Preserved *****

534          KK    R260
535          KM   Routing length updated using Signal Butte Floodway plans dated March 1983
536          KM   Routing length unchanged     12/12/00
537          KM   CHANNEL GEOMETRY FOR SIGNAL BUTTE FRS OBTAINED FROM AS-BUILT PLANS.
538          KM   ROUTE FLOW FROM SUB-BASIN 260 TO SUB-BASIN 280
539          RS       3    FLOW      -1
540          RC    .035    .025    .035    2300    .003
541          RX       0       1       2    23.4    43.4    64.8      65      66
542          RY     9.7     9.7     9.7       0       0     9.7     9.7     9.7
             * DDM   ***** Updated *****

543          KK     280
```

```
544          KM   SUB-BASIN 280
545          KM   24-HOUR SCS TYPE II RAINFALL WAS USED TO FIND TC & R FOR THIS BASIN
546          KM   THIS BASIN USED RAINFALL REDUCTION FACTOR OF  .998
547          KM     L =  .77  Kb = .048  Adj. Slope =   84.0
548          BA    .319
549          LG    .300    .250   5.300    .290  15.000
550          UC    .329    .168
1                                    HEC-1 INPUT                                                    PAGE 15

LINE         ID.......1.......2.......3.......4.......5.......6.......7.......8.......9......10

551          UA       0       5      16      30      65      77      84      90      94      97
552          UA     100
             * DDM   ***** Preserved *****

553          KK    C280
554          KM   HYDROGRAPH COMBINATION FOR SUB-BASIN 260 & SUB-BASIN 280
555          HC       2
             * DDM   ***** Preserved *****

556          KK    R280
557          KM   Routing length updated using Signal Butte Floodway plans dated March 1983
558          KM   Routing length decreased 400' from 2500' to 2100'    12/12/00
559          KM   CHANNEL GEOMETRY FOR SIGNAL BUTTE FRS OBTAINED FROM AS-BUILT PLANS.
560          KM   ROUTE FLOW FROM SUB-BASIN 280 TO SUB-BASIN 300
561          RS       3    FLOW      -1
562          RC    .035    .025    .035    2100    .003
563          RX       0       1       2    23.4    43.4    64.8      65      66
564          RY     9.7     9.7     9.7       0       0     9.7     9.7     9.7
             * DDM   ***** Updated *****

565          KK     300
566          KM   SUB-BASIN 300
567          KM   24-HOUR SCS TYPE II RAINFALL WAS USED TO FIND TC & R FOR THIS BASIN
568          KM   THIS BASIN USED RAINFALL REDUCTION FACTOR OF  .998
569          KM     L =  .78  Kb = .049  Adj. Slope =  103.0
570          BA    .289
571          LG    .300    .250   4.200    .520  16.000
572          UC    .321    .174
573          UA       0       5      16      30      65      77      84      90      94      97
574          UA     100
             * DDM   ***** Preserved *****

575          KK    C300
576          KM   HYDROGRAPH COMBINATION OF SUB-BASIN 280 & 300
577          HC       2
             *
             * DDM   ***** Preserved *****

578          KK    R300
579          KM   Routing length updated using Signal Butte Floodway plans dated March 1983
580          KM   Routing length increased 300' from 2200' to 2500'    12/12/00
581          KM   CHANNEL GEOMETRY FOR SIGNAL BUTTE FRS OBTAINED FROM AS-BUILT PLANS.
582          KM   ROUTE FLOW FROM SUB-BASIN 300 TO START OF FLOODWAY CONCRETE CHANNEL
583          RS       2    FLOW      -1
584          RC    .035    .025    .035    2500    .003
585          RX       0       1       2    23.4    55.4    76.8      77      78
586          RY     9.7     9.7     9.7       0       0     9.7     9.7     9.7
             *
             * DDM   ***** Updated *****
1                                    HEC-1 INPUT                                                    PAGE 16

LINE         ID.......1.......2.......3.......4.......5.......6.......7.......8.......9......10

587          KK    305A
588          KM   SUB-BASIN 305A
589          KM   24-HOUR SCS TYPE II RAINFALL WAS USED TO FIND TC & R FOR THIS BASIN
590          KM   THIS BASIN USED RAINFALL REDUCTION FACTOR OF  .998
591          KM     L =  .98  Kb = .048  Adj. Slope =   82.0
592          BA    .316
593          LG    .340    .320   4.600    .350  12.000
594          UC    .400    .254
595          UA       0       5      16      30      65      77      84      90      94      97
596          UA     100
             *
             * DDM   ***** Preserved *****

597          KK    C305
598          KM   HYDROGRAPH COMBINATION OF SUB-BASIN 300 AND 305A
599          HC       2
             * DDM   ***** Preserved *****

600          KK    R305
601          KM   Routing length updated using Signal Butte Floodway plans dated March 1983
602          KM   CHANNEL GEOMETRY FOR SPOOK HILL FRS OBTAINED FROM AS-BUILTS PLANS.
603          KM   CONTINUE TO ROUTE FLOW WITHIN CONCRETE CHANNEL TO SPOOK HILL FRS
604          RS       2    FLOW      -1
605          RC    .016    .016    .016    4000   .0146
606          RX       0       1       2     2.1    16.1    16.2      17      18
```

```
607          RY     7.5     7.5     7.5       0       0     7.5     7.5     7.5
             *
             * DDM   ***** Updated *****

608          KK   320B1
609          KM   SUB-BASIN 320B1
610          KM   24-HOUR SCS TYPE II RAINFALL WAS USED TO FIND TC & R FOR THIS BASIN
611          KM   THIS BASIN USED RAINFALL REDUCTION FACTOR OF  .997
612          KM     L = 1.13  Kb = .046  Adj. Slope =  106.0
613          BA    .454
614          LG    .300    .260   4.800    .310  17.000
615          UC    .375    .215
616          UA       0       5      16      30      65      77      84      90      94      97
617          UA     100
             *
             * DDM   ***** Preserved *****

618          KK  D320B1
619          KM        DIVERT FLOW INTO ONLINE  DETENTION BASIN
620          KM   DETENTION/RETENTION BASINS LOCATED WITHIN THREE SUBDIVISIONS
621          KM   SIERRA HEIGHTS       FALCON RIDGE    & MARBLE CREEK
622          KM        MAXIMUM VOLUME DIVERSION =  9.3 acre-feet
623          DT  B320B1    9.30
624          DI       0   10000
625          DQ       0   10000
             * DDM   ***** Preserved *****
```



```
LINE         ID.......1.......2.......3.......4.......5.......6.......7.......8.......9......10

626          KK  T320B1
627          KM   RETRIEVE FLOW FROM DIVERSION INTO ONLINE BASIN
628          DR  B320B1
             * DDM   ***** Preserved *****

629          KK  S320B1
630          KM   RETRIEVE FLOW INTO FICTICIOUS BASIN AND BLEED OFF WITHIN 36 HOURS.
631          KM   9.30 ACRE-FEETx43560/36x3600=4.cfs
632          RS       1    STOR       0
633          SV       0     .01     9.3    15.0
634          SQ       0     0.5     4.0    50.0
             * DDM   ***** Preserved *****

635          KK  C320B1
636          KM   HYDROGRAPH COMBINATION FOR SPOOK HILL FRS
637          HC       3
             *
             * DDM   ***** Updated *****

638          KK     350
639          KM   SUB-BASIN 350
640          KM   24-HOUR SCS TYPE II RAINFALL WAS USED TO FIND TC & R FOR THIS BASIN
641          KM   THIS BASIN USED RAINFALL REDUCTION FACTOR OF  .994
642          KM     L = 2.22  Kb = .041  Adj. Slope =  315.0
643          BA    .997
644          LG    .350    .350   4.550    .340   4.000
645          UC    .363    .227
646          UA       0       3       5       8      12      20      43      75      90      96
647          UA     100
             * DDM   ***** Preserved *****

648          KK    D350
649          KM   DIVERT FLOW FROM SUB-BASIN 350. FOR MODELING PURPOSES THE SPLIT FLOW WILL
650          KM   BE ROUTED BETWEEN SUB-BASINS 355 & 310. THE MAIN FLOW WILL ROUTED TO 310
651          DT   SF350
652          DI       0    5000
653          DQ       0    2500
             * DDM   ***** Preserved *****

654          KK    R350
655          KM   CHANNEL GEOMETRY OBTAINED FROM 2' CONTOUR MAPPING
656          KM   ROUTING OF MAIN FLOW FROM DIVERSION OF SUB-BASIN 350 TO SUB-BASIN 310
657          RS       7    FLOW      -1
658          RC    .045    .035    .045    5150    .025
659          RX       0       1      40      46      56      62     102     103
660          RY       3       2       2       0       0       2       2       3
             * DDM   ***** Updated *****

661          KK     310
662          KM   SUB-BASIN 310
663          KM   24-HOUR SCS TYPE II RAINFALL WAS USED TO FIND TC & R FOR THIS BASIN
664          KM   THIS BASIN USED RAINFALL REDUCTION FACTOR OF  .997
665          KM     L = 2.70  Kb = .045  Adj. Slope =  283.5
666          BA    .538
```



```
LINE         ID.......1.......2.......3.......4.......5.......6.......7.......8.......9......10

667          LG    .350    .350   3.910    .480    .000
```

```
668          UC    .483    .520
669          UA       0       3       5       8      12      20      43      75      90      96
670          UA     100
             * DDM   ***** Preserved *****

671          KK    C310
672          KM   HYDROGRAPH COMBINATION OF SUB-BASINS 350 & 310
673          HC       2    1.04
             * DDM   ***** Preserved *****

674          KK    R310
675          KM   CHANNEL GEOMETRY OBTAINED FROM 2' CONTOUR MAPPING.
676          KM   ROUTING OF FLOW FROM SUB-BASIN 310 TO 320B
677          RS      10    FLOW      -1
678          RC    .045    .035    .045    8550    .022
679          RX       0       1      40      46      56      62     102     103
680          RY       3       2       2       0       0       2       2       3
             *
             * DDM   ***** Updated *****

681          KK    305B
682          KM   SUB-BASIN 305B
683          KM   24-HOUR SCS TYPE II RAINFALL WAS USED TO FIND TC & R FOR THIS BASIN
684          KM   THIS BASIN USED RAINFALL REDUCTION FACTOR OF  .998
685          KM     L = 1.70  Kb = .047  Adj. Slope =  124.0
686          BA    .386
687          LG    .350    .350   4.500    .350    .000
688          UC    .492    .443
689          UA       0       3       5       8      12      20      43      75      90      96
690          UA     100
             *
             * DDM   ***** Preserved *****

691          KK   R305B
692          KM   CHANNEL GEOMETRY OBTAINED FROM 2' CONTOUR MAPPING.
693          KM   ROUTING OF FLOW FROM SUB-BASINS 305B TO SUB-BASIN 320B2.
694          RS       3    FLOW      -1
695          RC    .045    .035    .045    1700    .016
696          RX       0       1      40      46      56      62     102     103
697          RY       3       2       2       0       0       2       2       3
             *
             * DDM   ***** Updated *****

698          KK   320B2
699          KM   SUB-BASIN 320B2
700          KM   24-HOUR SCS TYPE II RAINFALL WAS USED TO FIND TC & R FOR THIS BASIN
701          KM   THIS BASIN USED RAINFALL REDUCTION FACTOR OF  .999
702          KM     L = 1.08  Kb = .050  Adj. Slope =  120.0
703          BA    .220
704          LG    .300    .270   4.500    .380   9.000
705          UC    .375    .314
706          UA       0       5      16      30      65      77      84      90      94      97
707          UA     100
             *
             * DDM   ***** Preserved *****
```



```
LINE         ID.......1.......2.......3.......4.......5.......6.......7.......8.......9......10

708          KK  D320B2
709          KM        DIVERT FLOW INTO ONLINE  DETENTION BASIN
710          KM   DETENTION/RETENTION BASINS LOCATED WITHIN THREE SUBDIVISIONS
711          KM   SIERRA HEIGHTS       FALCON RIDGE    & MARBLE CREEK
712          KM        MAXIMUM VOLUME DIVERSION =  3.32acre-feet
713          DT  B320B2    3.32
714          DI       0   10000
715          DQ       0   10000
             * DDM   ***** Preserved *****

716          KK  T320B2
717          KM   RETRIEVE FLOW FROM DIVERSION INTO ONLINE BASIN
718          DR  B320B2
             * DDM   ***** Preserved *****

719          KK  S320B2
720          KM   RETRIEVE FLOW INTO FICTICIOUS BASIN AND BLEED OFF WITHIN 36 HOURS.
721          KM   3.32 ACRE-FEETx43560/36x3600=1.2cfs
722          RS       1    STOR       0
723          SV       0     .01     3.3     5.0
724          SQ       0     0.5     1.2    15.0
             *
             * DDM   ***** Preserved *****

725          KK  C320B2
726          KM    Combine R305B, R310 and 320B2
727          HC       4
             *
             * DDM   ***** Preserved *****
```

```
KK  R320B2
KM   CHANNEL GEOMETRY OBTAINED FROM 2' CONTOUR MAPPING.
KM   ROUTING OF FLOW FROM SUB-BASINS 320B2 TO SUB-BASIN 340B.
RS       2    FLOW      -1
RC    .045    .035    .045    1000    .016
RX       0       1      40      46      56      62     102     103
RY       5       2       2       0       0       2       2       5
*
* DDM   ***** Updated *****

KK    340B
KM   SUB-BASIN 340B
KM   24-HOUR SCS TYPE II RAINFALL WAS USED TO FIND TC & R FOR THIS BASIN
KM   THIS BASIN USED RAINFALL REDUCTION FACTOR OF  .998
KM     L =  .85  Kb = .049  Adj. Slope =  238.5
BA    .290
LG    .280    .250   4.000    .560  23.000
UC    .242    .136
UA       0       5      16      30      65      77      84      90      94      97
UA     100
*
* DDM   ***** Preserved *****
```



```
LINE          ID.......1.......2.......3.......4.......5.......6.......7.......8.......9......10

KK   D340B
KM        DIVERT FLOW INTO ONLINE  DETENTION BASIN
KM   DETENTION/RETENTION BASINS LOCATED WITHIN THREE SUBDIVISIONS
KM   GRANDVIEW ESTATES    BOULDER MOUNTAIN & 33% OF MESA HIGHLANDS
KM        MAXIMUM VOLUME DIVERSION = 15.6 acre-feet
DT  BS340B    15.6
DI       0   10000
DQ       0   10000
* DDM   ***** Preserved *****

KK  RT340B
KM   RETRIEVE FLOW FROM DIVERSION INTO ONLINE BASIN
DR  BS340B
* DDM   ***** Preserved *****

KK   S340B
KM   RETRIEVE FLOW INTO FICTICIOUS BASIN AND BLEED OFF WITHIN 36 HOURS.
KM    15.6 ACRE-FEETx43560/36x3600= 5.2cfs
RS       1    STOR       0
SV       0     .01    15.6      20
SQ       0     1.0     5.2      50
* DDM   ***** Preserved *****

KK   C340B
KM   HYDROGRAPH COMBINATION
HC       3
*
* DDM   ***** Preserved *****

KK  DD340B
KM   DIVERT FLOW INTO OFFLINE DETENTION BASIN LOCATED WITHIN SUB-BASINS 340B.
DT   BS340
DI       0     200    1000    2000    5000
DQ       0       0     800    1800    4800
* DDM   ***** Preserved *****

KK   RT340
KM   RETRIEVE FLOW FROM DIVERSION
DR   BS340
* DDM   ***** Preserved *****

KK  SS340B
KM   RETRIEVE FLOW INTO OFFLINE BASIN AND BLEED OFF WITHIN 36 HOURS.
KM      55 ACRE-FEETx43560/36x3600 = 19cfs
RS       1    STOR       0
SV       0     .01      55      60
SQ       0     3.0      50     100
*
```



```
LINE          ID.......1.......2.......3.......4.......5.......6.......7.......8.......9......10

KK  CD340B
KM   HYDROGRAPH COMBINATION
HC       2
* DDM   ***** Preserved *****

KK   RT350
KM   RETRIEVE SPLIT FLOW FROM DIVERSION OF SUB-BASIN 350
DR   SF350
* DDM   ***** Preserved *****
```

```
785          KK   RR350
786          KM   CHANNEL GEOMETRY OBTAINED FROM 2' CONTOUR MAPPING.
787          KM   ROUTING OF FLOW FROM SPLIT OF SUB-BASIN 350 TO 355
788          RS       7    FLOW      -1
789          RC    .045    .035    .045    6050    .025
790          RX       0       1      40      46      56      62     102     103
791          RY       3       2       2       0       0       2       2       3
             *
             * DDM   ***** Updated *****

792          KK     355
793          KM   SUB-BASIN 355
794          KM   24-HOUR SCS TYPE II RAINFALL WAS USED TO FIND TC & R FOR THIS BASIN
795          KM   THIS BASIN USED RAINFALL REDUCTION FACTOR OF  .996
796          KM     L = 3.00  Kb = .044  Adj. Slope =  284.0
797          BA    .676
798          LG    .340    .340   4.450    .370   4.000
799          UC    .488    .502
800          UA       0       3       5       8      12      20      43      75      90      96
801          UA     100
             * DDM   ***** Preserved *****

802          KK    C355
803          KM   HYDROGRAPH COMBINATION OF SUB-BASIN 355 AND THE SPLIT FLOW FROM SUB-BASIN 350
804          HC       2  1.1745
             *
             * DDM   ***** Preserved *****

805          KK    D355
806          KM        DIVERT FLOW INTO OFFLINE BASIN
807          KM        MAXIMUM VOLUME DIVERSION = 18 acre-feet
808          DT   BS355
809          DI       0     100     450    1000    2000    5000
810          DQ       0       0       0     550    1550    4550
             *
             * DDM   ***** Preserved *****

811          KK   RT355
812          KM   RETRIEVE FLOW FROM DIVERSION INTO OFFLINE BASIN
813          DR   BS355
             *
             * DDM   ***** Preserved *****
                                        HEC-1 INPUT                                                    PAGE 22

LINE         ID.......1.......2.......3.......4.......5.......6.......7.......8.......9......10

814          KK    S355
815          KM   RETRIEVE FLOW INTO FICTICIOUS BASIN AND BLEED OFF WITHIN 36 HOURS.
816          KM   18.0 ACRE-FEETx43560/36x3600= 6.0CFS
817          RS       1    STOR       0
818          SV       0     .01    18.0    25.0
819          SQ       0     2.0      40      50
             *
             * DDM   ***** Preserved *****

820          KK   CC355
821          KM   HYDROGRAPH COMBINATION
822          HC       2
             *
             * DDM   ***** Preserved *****

823          KK    R355
824          KM   CHANNEL GEOMETRY OBTAINED FROM 2' CONTOUR MAPPING.
825          KM   ROUTING OF FLOW FROM SUB-BASIN 355 TO SUB-BASIN 340B
826          RS       1    FLOW      -1
827          RC    .045    .035    .045    4000    .025
828          RX       0       1      40      46      56      62     102     103
829          RY       3       2       2       0       0       2       2       3
             *
             * DDM   ***** Preserved *****

830          KK  CC340B
831          KM   HYDROGRAPH COMBINATION
832          HC       2
             * DDM   ***** Preserved *****

833          KK   R340B
834          KM   CHANNEL GEOMETRY OBTAINED FROM 2' CONTOUR MAPPING.
835          KM   ROUTING OF FLOW FROM SUB-BASIN 340B TO SUB-BASIN 340A2.
836          RS       2    FLOW      -1
837          RC    .045    .035    .045    1500    .027
838          RX       0       1      40      46      56      62     102     103
839          RY       3       2       2       0       0       2       2       3
             *
             * DDM   ***** Updated *****

840          KK   340A2
841          KM   SUB-BASIN 340A2
842          KM   24-HOUR SCS TYPE II RAINFALL WAS USED TO FIND TC & R FOR THIS BASIN
```

```
843          KM   THIS BASIN USED RAINFALL REDUCTION FACTOR OF 1.000
844          KM     L =  .48  Kb = .047  Adj. Slope =  297.9
845          BA    .037
846          LG    .230    .310   5.300    .250  55.000
847          UC    .158    .174
848          UA       0       5      16      30      65      77      84      90      94      97
849          UA     100
             *
             * DDM   ***** Preserved *****
1                                        HEC-1 INPUT                                          PAGE 23

LINE         ID.......1.......2.......3.......4.......5.......6.......7.......8.......9......10

850          KK  D340A2
851          KM        DIVERT FLOW INTO ONLINE  DETENTION BASIN
852          KM        MAXIMUM VOLUME DIVERSION = 2.2 acre-feet
853          DT  B340A2     2.2
854          DI       0   10000
855          DQ       0   10000
             * DDM   ***** Preserved *****

856          KK  T340A2
857          KM   RETRIEVE FLOW FROM DIVERSION INTO ONLINE BASIN
858          DR  B340A2
             * DDM   ***** Preserved *****

859          KK  S340A2
860          KM   RETRIEVE FLOW INTO FICTICIOUS BASIN AND BLEED OFF WITHIN 36 HOURS.
861          KM    2.20 ACRE-FEETx43560/36x3600= 1.0cfs
862          RS       1    STOR       0
863          SV       0     .01     2.2     5.0
864          SQ       0     0.5     1.0    10.0
             * DDM   ***** Preserved *****

865          KK  C340A2
866          KM   HYDROGRAPH COMBINATION
867          HC       3
             *
             * DDM   ***** Preserved *****

868          KK  R340A2
869          KM   CHANNEL GEOMETRY OBTAINED FROM 2' CONTOUR MAPPING.
870          KM   ROUTING OF FLOW FROM SUB-BASIN 340A2 TO SUB-BASIN 320B.
871          RS       5    FLOW      -1
872          RC    .045    .035    .045    4500    .020
873          RX       0       1      40      46      56      62     102     103
874          RY       3       2       2       0       0       2       2       3
             *
             * DDM   ***** Preserved *****

875          KK  CC320B
876          KM   HYDROGRAPH COMBINATION
877          HC       2
             *
             * DDM   ***** Preserved *****

878          KK   R320B
879          KM   Routing Flow from 320B1 to 320A
880          KM   Routing length updated using Signal Butte Floodway plans dated March 1983
881          KM   CHANNEL GEOMETRY FOR SPOOK HILL FRS OBTAINED FROM AS-BUILTS PLANS.
882          KM   CONTINUE TO ROUTE FLOW WITHIN CONCRETE CHANNEL TO SPOOK HILL FRS
883          RS       1    FLOW      -1
884          RC    .016    .016    .016    1500   .0146
885          RX       0       1       2     2.1    16.1    16.2      17      18
886          RY     7.5     7.5     7.5       0       0     7.5     7.5     7.5
             *
             * DDM   ***** Updated *****
1                                        HEC-1 INPUT                                          PAGE 24

LINE         ID.......1.......2.......3.......4.......5.......6.......7.......8.......9......10

887          KK    320A
888          KM   SUB-BASIN 320A
889          KM   24-HOUR SCS TYPE II RAINFALL WAS USED TO FIND TC & R FOR THIS BASIN
890          KM   THIS BASIN USED RAINFALL REDUCTION FACTOR OF  .998
891          KM     L = 1.07  Kb = .049  Adj. Slope =   93.0
892          BA    .270
893          LG    .280    .250   4.300    .490  25.000
894          UC    .404    .301
895          UA       0       5      16      30      65      77      84      90      94      97
896          UA     100
             *
             * DDM   ***** Preserved *****

897          KK   D320A
898          KM        DIVERT FLOW INTO ONLINE  DETENTION BASIN
899          KM   DETENTION/RETENTION BASINS LOCATED WITHIN THREE SUBDIVISIONS
900          KM   GRANDVIEW ESTATES    BOULDER MOUNTAIN & 33% OF MESA HIGHLANDS
```

```
901          KM        MAXIMUM VOLUME DIVERSION = 11.8 acre-feet
902          DT  BS320A    11.8
903          DI       0   10000
904          DQ       0   10000
             * DDM   ***** Preserved *****

905          KK  RT320A
906          KM   RETRIEVE FLOW FROM DIVERSION INTO ONLINE BASIN
907          DR  BS320A
             * DDM   ***** Preserved *****

908          KK   S320A
909          KM   RETRIEVE FLOW INTO FICTICIOUS BASIN AND BLEED OFF WITHIN 36 HOURS.
910          KM    11.8 ACRE-FEETx43560/36x3600= 4.0cfs
911          RS       1    STOR       0
912          SV       0     .01    11.8      20
913          SQ       0     1.0     4.0    40.0
             * DDM   ***** Preserved *****

914          KK    C320
915          KM   HYDROGRAPH COMBINATION
916          HC       3
             *
             * DDM   ***** Updated *****

917          KK   340A1
918          KM   SUB-BASIN 340A1
919          KM   24-HOUR SCS TYPE II RAINFALL WAS USED TO FIND TC & R FOR THIS BASIN
920          KM   THIS BASIN USED RAINFALL REDUCTION FACTOR OF  .993
921          KM     L = 1.80  Kb = .045  Adj. Slope =  117.0
922          BA   1.089
923          LG    .250    .250   4.150    .560  24.000
924          UC    .500    .261
925          UA       0       5      16      30      65      77      84      90      94      97
926          UA     100
             *
             * DDM   ***** Preserved *****
1                                    HEC-1 INPUT                                          PAGE 25

LINE         ID.......1.......2.......3.......4.......5.......6.......7.......8.......9......10

927          KK  D340A1
928          KM        DIVERT FLOW INTO ONLINE  DETENTION BASIN
929          KM   DETENTION/RETENTION BASINS LOCATED WITHIN THREE SUBDIVISIONS
930          KM   GRANDVIEW ESTATES    BOULDER MOUNTAIN & 33% OF MESA HIGHLANDS
931          KM        MAXIMUM VOLUME DIVERSION = 91.9 acre-feet
932          DT  B340A1    91.9
933          DI       0   10000
934          DQ       0   10000
             * DDM   ***** Preserved *****

935          KK  T340A1
936          KM   RETRIEVE FLOW FROM DIVERSION INTO ONLINE BASIN
937          DR  B340A1
             * DDM   ***** Preserved *****

938          KK  S340A1
939          KM   RETRIEVE FLOW INTO FICTICIOUS BASIN AND BLEED OFF WITHIN 36 HOURS.
940          KM    91.9 ACRE-FEETx43560/36x3600=30.9cfs
941          RS       1    STOR       0
942          SV       0     .01    91.9     120
943          SQ       0     3.0    20.9     300
             *
             * DDM   ***** Preserved *****

944          KK  C340A1
945          KM   HYDROGRAPH COMBINATION FOR SPOOK HILL FRS
946          HC       2
             *
             * DDM   ***** Preserved *****

947          KK    C340
948          KM   HYDROGRAPH COMBINATION FOR SPOOK HILL FRS
949          HC       2
             *
             * DDM   ***** Updated *****

950          KK     360
951          KM   SUB-BASIN 360
952          KM   24-HOUR SCS TYPE II RAINFALL WAS USED TO FIND TC & R FOR THIS BASIN
953          KM   THIS BASIN USED RAINFALL REDUCTION FACTOR OF  .995
954          KM     L = 2.10  Kb = .044  Adj. Slope =  124.0
955          BA    .880
956          LG    .260    .250   4.100    .570  23.000
957          UC    .538    .362
958          UA       0       5      16      30      65      77      84      90      94      97
959          UA     100
             * DDM   ***** Preserved *****
```

```
 960          KK    D360
 961          KM        DIVERT FLOW INTO ONLINE  DETENTION BASIN
 962          KM   DETENTION/RETENTION BASINS LOCATED WITHIN 33% OF MESA HIGHLANDS
 963          KM        MAXIMUM VOLUME DIVERSION = 49.5 acre-feet
 964          DT   BS360    49.5
 965          DI       0   10000
1                                        HEC-1 INPUT                                                    PAGE 26

LINE          ID.......1.......2.......3.......4.......5.......6.......7.......8.......9......10

 966          DQ       0   10000
              * DDM   ***** Preserved *****

 967          KK   RT360
 968          KM   RETRIEVE FLOW FROM DIVERSION INTO ONLINE BASIN
 969          DR   BS360
              * DDM   ***** Preserved *****

 970          KK    S360
 971          KM   RETRIEVE FLOW INTO FICTICIOUS BASIN AND BLEED OFF WITHIN 36 HOURS.
 972          KM    49.5 ACRE-FEETx43560/36x3600=16.6 cfs
 973          RS       1    STOR       0
 974          SV       0     .01    49.5      70
 975          SQ       0     3.0    16.6     150
              * DDM   ***** Preserved *****

 976          KK    C360
 977          KM   HYDROGRAPH COMBINATION FOR SPOOK HILL FRS
 978          HC       3
              *
              * DDM   ***** Updated *****

 979          KK    380A
 980          KM   SUB-BASIN 380A
 981          KM   24-HOUR SCS TYPE II RAINFALL WAS USED TO FIND TC & R FOR THIS BASIN
 982          KM   THIS BASIN USED RAINFALL REDUCTION FACTOR OF  .998
 983          KM     L =  .66  Kb = .076  Adj. Slope =   91.0
 984          BA    .261
 985          LG    .170    .250   4.100    .710  21.000
 986          UC    .425    .221
 987          UA       0       3       5       8      12      20      43      75      90      96
 988          UA     100
              *
              * DDM   ***** Preserved *****

 989          KK   C380A
 990          KM   HYDROGRAPH COMBINATION FOR SPOOK HILL FRS
 991          HC       2
              *
              * DDM   ***** Updated *****

 992          KK    400A
 993          KM   SUB-BASIN 400A
 994          KM   24-HOUR SCS TYPE II RAINFALL WAS USED TO FIND TC & R FOR THIS BASIN
 995          KM   THIS BASIN USED RAINFALL REDUCTION FACTOR OF 1.000
 996          KM     L =  .28  Kb = .094  Adj. Slope =   71.0
 997          BA    .048
 998          LG    .250    .290   4.000    .640    .000
 999          UC    .317    .211
1000          UA       0       3       5       8      12      20      43      75      90      96
1001          UA     100
              *
              * DDM   ***** Preserved *****
1                                        HEC-1 INPUT                                                    PAGE 27

LINE          ID.......1.......2.......3.......4.......5.......6.......7.......8.......9......10

1002          KK   C400A
1003          KM   HYDROGRAPH COMBINATION FOR SPOOK HILL FRS
1004          HC       2
              *

1005          KK     370
1006          KM   SUB-BASIN 370
1007          KM   24-HOUR SCS TYPE II RAINFALL WAS USED TO FIND TC & R FOR THIS BASIN
1008          KM   THIS BASIN USED RAINFALL REDUCTION FACTOR OF  .996
1009          KM     L = 1.90  Kb = .044  Adj. Slope =  203.5
1010          BA    .672
1011          LG    .340    .320   4.650    .330   8.000
1012          UC    .404    .284
1013          UA       0       3       5       8      12      20      43      75      90      96
1014          UA     100
              *

1015          KK    S370
1016          KM   Online Detention Basin at Madrid Subdivision
1017          KM   Basin Bottom Elevation = 1822.9 ft
1018          KM   Route through 24" pipe for 404 low flow and
1019          KM   Route through 72" pipe to west along McDowell
```

```
1020    KM   2-8'x3' RCBC as emergency spillway
1021    RS       1    STOR       0
1022    SV       0    1.37    3.61    5.97    8.46   11.07   13.81   16.69   19.72
1023    SE     0.9     2.0     3.0     4.0     5.0     6.0     7.0     8.0     9.0
1024    SQ     0.0      98     157     221     270     313     350     380     800
        *

1025    KK    D370
1026    KM   Split the out flow to pipe along McDowell Road and to Madrid subdivision
1027    DT   B370W
1028    DI     0.0      98     157     221     270     313     350     380     800
1029    DQ       0      89     141     199     243     282     315     340     380
        *

1030    KK   R370S
1031    KM   CHANNEL GEOMETRY OBTAINED FROM 2' CONTOUR MAPPING.
1032    KM   ROUTING FLOW to SUB-BASINS 380B1
1033    RS      12    FLOW      -1
1034    RC    .045    .035    .045    8800    .023
1035    RX       0       1      40      46      56      62     102     103
1036    RY       3       2       2       0       0       2       2       3
        *

1037    KK   380B1
1038    KM   SUB-BASIN 380B1
1039    KM   24-HOUR SCS TYPE II RAINFALL WAS USED TO FIND TC & R FOR THIS BASIN
1040    KM   THIS BASIN USED RAINFALL REDUCTION FACTOR OF  .998
1041    KM     L = 1.61  Kb = .047  Adj. Slope =  124.0
1042    BA    .369
1043    LG    .300    .250   4.200    .520  16.000
1044    UC    .471    .414
1045    UA       0       5      16      30      65      77      84      90      94      97
```



```
LINE    ID.......1.......2.......3.......4.......5.......6.......7.......8.......9......10

1046    UA     100
        *

1047    KK  D380B1
1048    KM        DIVERT FLOW INTO ONLINE  DETENTION BASIN
1049    KM   DETENTION/RETENTION BASINS LOCATED WITHIN MESA HIGHLANDS
1050    KM        MAXIMUM VOLUME DIVERSION = 10.5 acre-feet
1051    DT  B380B1    10.5
1052    DI       0   10000
1053    DQ       0   10000
        *

1054    KK  T380B1
1055    KM   RETRIEVE FLOW FROM DIVERSION INTO ONLINE BASIN
1056    DR  B380B1
        *

1057    KK  S380B1
1058    KM   RETRIEVE FLOW INTO FICTICIOUS BASIN AND BLEED OFF WITHIN 36 HOURS.
1059    KM    10.5 ACRE-FEETx43560/36x3600=3.5cfs
1060    RS       1    STOR       0
1061    SV       0     .01    10.5    20.0
1062    SQ       0     1.0     3.5    50.0
        *

1063    KK  C380B1
1064    KM   HYDROGRAPH COMBINATION
1065    HC       3
        *

1066    KK  R380B1
1067    KM   CHANNEL GEOMETRY OBTAINED FROM 2' CONTOUR MAPPING.
1068    KM   ROUTING OF FLOW FROM SUB-BASINS 380B1 TO SUB-BASIN 400B1.
1069    RS       7    FLOW      -1
1070    RC    .045    .035    .045    2600    .023
1071    RX       0       1      40      46      56      62     102     103
1072    RY       3       2       2       0       0       2       2       3
        *
        * DDM   ***** Updated *****

1073    KK   400B1
1074    KM   SUB-BASIN 400B1
1075    KM   24-HOUR SCS TYPE II RAINFALL WAS USED TO FIND TC & R FOR THIS BASIN
1076    KM   THIS BASIN USED RAINFALL REDUCTION FACTOR OF  .998
1077    KM     L =  .93  Kb = .057  Adj. Slope =   91.0
1078    BA    .385
1079    LG    .280    .250   4.100    .590  12.000
1080    UC    .433    .238
1081    UA       0       5      16      30      65      77      84      90      94      97
1082    UA     100
        *
        * DDM   ***** Preserved *****
```

```
LINE          ID.......1.......2.......3.......4.......5.......6.......7.......8.......9......10

1083          KK  D400B1
1084          KM        DIVERT FLOW INTO ONLINE  DETENTION BASIN
1085          KM   DETENTION/RETENTION BASIN LOCATED WITHIN SAGUARO VISTA SUBDIVISION
1086          KM        MAXIMUM VOLUME DIVERSION = 5.6 ACRE-FEET
1087          DT  B400B1     5.6
1088          DI       0   10000
1089          DQ       0   10000
              * DDM   ***** Preserved *****

1090          KK  T400B1
1091          KM   RETRIEVE FLOW FROM DIVERSION INTO ONLINE BASIN
1092          DR  B400B1
              * DDM   ***** Preserved *****

1093          KK  S400B1
1094          KM   RETRIEVE FLOW INTO FICTICIOUS BASIN AND BLEED OFF WITHIN 36 HOURS.
1095          KM     5.6 ACRE-FEETx43560/36x3600 = 2 cfs
1096          RS       1    STOR       0
1097          SV       0     .01     5.6    10.0
1098          SQ       0       1       2    20.0
              * DDM   ***** Preserved *****

1099          KK  C400B1
1100          KM   HYDROGRAPH COMBINATION FOR SPOOK HILL FRS
1101          HC       2
              * DDM   ***** Preserved *****

1102          KK  CC400B
1103          KM   HYDROGRAPH COMBINATION FOR SPOOK HILL FRS
1104          HC       3
              *
              * DDM   ***** Updated *****

1105          KK   420A2
1106          KM   SUB-BASIN 420A2
1107          KM   24-HOUR SCS TYPE II RAINFALL WAS USED TO FIND TC & R FOR THIS BASIN
1108          KM   THIS BASIN USED RAINFALL REDUCTION FACTOR OF 1.000
1109          KM     L =  .26  Kb = .064  Adj. Slope =   96.0
1110          BA    .022
1111          LG    .350    .350   4.150    .430    .000
1112          UC    .208    .194
1113          UA       0       5      16      30      65      77      84      90      94      97
1114          UA     100
              *
              * DDM   ***** Preserved *****

1115          KK  C400A2
1116          KM   HYDROGRAPH COMBINATION FOR SPOOK HILL FRS
1117          HC       2
              *
1                                   HEC-1 INPUT                                          PAGE 30

LINE          ID.......1.......2.......3.......4.......5.......6.......7.......8.......9......10

1118          KK   T370W
1119          KM   RETRIEVE FLOW FROM DIVERSION of ONLINE BASIN
1120          DR   B370W
              *

1121          KK   R370W
1122          KM   ROUTING OF FLOW FROM SUB-BASINS 370W TO Hawes along McDowell.
1123          RS       5    FLOW      -1
1124          RC    .045    .035    .045    3200    .023
1125          RX       0       1      40      46      56      62     102     103
1126          RY       3       2       2       0       0       2       2       3
              *

1127          KK    395A
1128          KM   SUB-BASIN 395A
1129          KM   24-HOUR SCS TYPE II RAINFALL WAS USED TO FIND TC & R FOR THIS BASIN
1130          KM   THIS BASIN USED RAINFALL REDUCTION FACTOR OF  .999
1131          KM     L = 1.48  Kb = .051  Adj. Slope =  216.6
1132          BA    .187
1133          LG    .310    .270   4.800    .300   9.000
1134          UC    .358    .421
1135          UA       0       5      16      30      65      77      84      90      94      97
1136          UA     100
              * DDM   ***** Preserved *****

1137          KK  R390C1
1138          KM   Route runoff from subbasin 395A through Thunder Mountain subdivision
1139          KM   to concentration point 390C
1140          KM   CHANNEL GEOMETRY OBTAINED FROM 2' CONTOUR MAPPING.
1141          RS       3    FLOW      -1
1142          RC   0.045   0.035   0.045    1600   0.032
1143          RX       0       5      10      22      40      45      60      90
```

```
1144    RY       4       3       2       0       0       2       3       4
        * DDM   ***** Updated *****

1145    KK    395B
1146    KM   SUB-BASIN 395B
1147    KM   24-HOUR SCS TYPE II RAINFALL WAS USED TO FIND TC & R FOR THIS BASIN
1148    KM   THIS BASIN USED RAINFALL REDUCTION FACTOR OF 1.000
1149    KM     L =  .18  Kb = .075  Adj. Slope =  167.0
1150    BA    .004
1151    LG    .300    .250   5.100    .270   5.000
1152    UC    .150    .266
1153    UA       0       5      16      30      65      77      84      90      94      97
1154    UA     100
        * DDM   ***** Preserved *****

1155    KK  R390C2
1156    KM   Route runoff hydrograph from 395B to concentration point 390C in existing
1157    KM   channel along McDowell Road
1158    KM   CHANNEL GEOMETRY OBTAINED FROM 2' CONTOUR MAPPING.
1159    RS       3    FLOW      -1
1160    RC   0.045   0.035   0.045    1380   0.027
1161    RX       0       1       3       6      28      31      34      37
1                                   HEC-1 INPUT                                    PAGE 31

LINE    ID.......1.......2.......3.......4.......5.......6.......7.......8.......9......10

1162    RY       2       2       1       0       0       1       2       3
        * DDM   ***** Updated *****

1163    KK    390C
1164    KM   SUB-BASIN 390C
1165    KM   24-HOUR SCS TYPE II RAINFALL WAS USED TO FIND TC & R FOR THIS BASIN
1166    KM   THIS BASIN USED RAINFALL REDUCTION FACTOR OF  .999
1167    KM     L =  .53  Kb = .054  Adj. Slope =  162.0
1168    BA    .121
1169    LG    .300    .250   5.300    .290  20.000
1170    UC    .221    .139
1171    UA       0       5      16      30      65      77      84      90      94      97
1172    UA     100
        * DDM   ***** Preserved *****

1173    KK  CP390C
1174    KM   Combine routed hydrographs from 395A, 395B, with runoff hydrograph from
1175    KM   subbasin 390C
1176    HC       3
        * DDM   ***** Preserved *****

1177    KK   TOC-H
1178    KM   Divert into proposed storm drain for Culver-Hawes detention
1179    KM   basin.  Diversion determined by rating curve.
1180    DT  TO390B
1181    DI       0       8      29      86     244     457    1000
1182    DQ       0       0       0      31     159     342     885
        *
        *

1183    KK    C370
1184    KM   COMBINE FLOWS IN STORMDRAIN ALONG McDOWELL FROM LaMADRID BASIN AND THUNDER
1185    KM   MOUNTAIN BASIN
1186    HC       2    1.30
        *

1187    KK   R390S
1188    KM   Route Flow South to Subbasin 400B3.
1189    RS       2    FLOW      -1
1190    RC    .045    .045    .045    1000    .020
1191    RX       0       1      40      46      56      62     102     103
1192    RY       3       2       2       0       0       2       2       3
        *

1193    KK   400B3
1194    KM   SUB-BASIN 400B3
1195    KM   24-HOUR SCS TYPE II RAINFALL WAS USED TO FIND TC & R FOR THIS BASIN
1196    KM   THIS BASIN USED RAINFALL REDUCTION FACTOR OF 1.000
1197    KM     L =  .26  Kb = .064  Adj. Slope =  135.0
1198    BA    .024
1199    LG    .300    .250   4.500    .430    .000
1200    UC    .183    .161
1201    UA       0       5      16      30      65      77      84      90      94      97
1202    UA     100
        *
1                                   HEC-1 INPUT                                    PAGE 32

LINE    ID.......1.......2.......3.......4.......5.......6.......7.......8.......9......10

1203    KK  D400B3
1204    KM        DIVERT FLOW INTO ONLINE  DETENTION BASIN
1205    KM   DETENTION/RETENTION BASIN LOCATED WITHIN SAGUARO VISTA SUBDIVISION
1206    KM        MAXIMUM VOLUME DIVERSION = 1.6 ACRE-FEET
```

```
1207          DT  B400B3     1.6
1208          DI       0   10000
1209          DQ       0   10000
              *

1210          KK  T400B3
1211          KM   RETRIEVE FLOW FROM DIVERSION INTO ONLINE BASIN
1212          DR  B400B3
              *

1213          KK  S400B3
1214          KM   RETRIEVE FLOW INTO FICTICIOUS BASIN AND BLEED OFF WITHIN 36 HOURS.
1215          KM     1.6 ACRE-FEETx43560/36x3600 = 1 cfs
1216          RS       1    STOR       0
1217          SV       0     .01     1.6     5.0
1218          SQ       0       1       1    10.0
              *

1219          KK  C400B3
1220          KM   HYDROGRAPH COMBINATION
1221          HC       2
              *

1222          KK   C390S
1223          KM   HYDROGRAPH COMBINATION of flow fron north of the Basin
1224          HC       2
              *

1225          KK   380B3
1226          KM   SUB-BASIN 380B3
1227          KM   24-HOUR SCS TYPE II RAINFALL WAS USED TO FIND TC & R FOR THIS BASIN
1228          KM   THIS BASIN USED RAINFALL REDUCTION FACTOR OF  .999
1229          KM     L =  .69  Kb = .054  Adj. Slope =  138.0
1230          BA    .123
1231          LG    .300    .250   4.350    .480  16.000
1232          UC    .279    .220
1233          UA       0       5      16      30      65      77      84      90      94      97
1234          UA     100
              *

1235          KK  D380B3
1236          KM        DIVERT FLOW INTO ONLINE  DETENTION BASIN
1237          KM        MAXIMUM VOLUME DIVERSION = 4.0 acre-feet
1238          DT  B380B3     4.0
1239          DI       0   10000
1240          DQ       0   10000
              *
```



```
LINE          ID.......1.......2.......3.......4.......5.......6.......7.......8.......9......10

1241          KK  T380B3
1242          KM   RETRIEVE FLOW FROM DIVERSION INTO ONLINE BASIN
1243          DR  B380B3
              *

1244          KK  S380B3
1245          KM   RETRIEVE FLOW INTO FICTICIOUS BASIN AND BLEED OFF WITHIN 36 HOURS.
1246          KM     4.0 ACRE-FEETx43560/36x3600= 2.cfs
1247          RS       1    STOR       0
1248          SV       0     .01     4.0     6.0
1249          SQ       0     0.5     2.0    20.0
              *

1250          KK  C380B3
1251          KM   HYDROGRAPH COMBINATION
1252          HC       2
              *

1253          KK  D380B3
1254          KM   Subbasin 380B3 is Divided into 3 Smaller Areas
1255          KM   38% to 380B3a, 35% to 380B3b, and 27% to 380B3c
1256          DT  380B3c
1257          DI       0    1000
1258          DQ       0     270
              *

1259          KK  380B3b
1260          KM   Subbasin 380B3 is Divided into 3 Smaller Areas
1261          KM   38% to 380B3a, 35% to 380B3b, and 27% to 380B3c
1262          DT  380B3a
1263          DI       0    1000
1264          DQ       0     520
              *

1265          KK  C380BB
1266          KM   Total Basin Inflows from North and East Areas
1267          HC       2
              *
```

```
1268          KK   D380B
1269          KM   DIVERT FLOW INTO OFFLINE DETENTION BASIN LOCATED WITHIN SUB-BASINS
1270          KM   380B3b - Culver/Hawes basin
1271          DT  B38B3b
1272          DI       0      70    5000
1273          DQ       0       0    4930
              *

1274          KK  RT380B
1275          KM   RETRIEVE FLOW FROM DIVERSION
1276          DR  B38B3b
              *
```



```
LINE          ID.......1.......2.......3.......4.......5.......6.......7.......8.......9......10

1277          KK   S380B
1278          KM   RETRIEVE FLOW INTO OFFLINE BASIN AND BLEED OFF WITHIN 36 HOURS.
1279          RS       1    STOR       0
1280          SV       0     2.5     5.1    11.0    18.7    28.0    32.0
1281          SE       0     1.0     2.0     4.0     6.0     8.0     9.0
1282          SQ       0     6.2     8.8    15.3    20.0      25     250
              *

1283          KK  CC380B
1284          KM   HYDROGRAPH COMBINATION at outlet of Basin "S380B"
1285          HC       2
              *

1286          KK  R38B3b
1287          KM   ROUTING OF FLOW FROM BASIN TO SUB-BASIN 380B3c
1288          RS       3    FLOW      -1
1289          RC    .045    .035    .045    1300    .020
1290          RX       0       1      40      46      56      62     102     103
1291          RY       3       2       2       0       0       2       2       3
              *

1292          KK  T38B3a
1293          KM   RETRIEVE FLOW FROM DIVERSION of 380B3a
1294          DR  380B3a
              *

1295          KK  R38B3a
1296          KM   ROUTING OF FLOW FROM SUB-BASINS 380B3a TO SUB-BASIN 380B3c.
1297          RS       3    FLOW      -1
1298          RC    .045    .035    .045    1800    .020
1299          RX       0       1      40      46      56      62     102     103
1300          RY       3       2       2       0       0       2       2       3
              *

1301          KK  T38B3c
1302          KM   RETRIEVE FLOW FROM DIVERSION of 380B3c
1303          DR  380B3c
              *

1304          KK  C38B3c
1305          KM   HYDROGRAPH COMBINATION of 380B3c, 380B3a and flow from the Basin
1306          HC       3
              *

1307          KK  R380B3
1308          KM   ROUTING OF FLOW FROM SUB-BASINS 380B3c TO SUB-BASIN 380B2.
1309          RS       4    FLOW      -1
1310          RC    .045    .035    .045    2500    .020
1311          RX       0       1      40      46      56      62     102     103
1312          RY       3       2       2       0       0       2       2       3
              *
```



```
LINE          ID.......1.......2.......3.......4.......5.......6.......7.......8.......9......10

1313          KK   380B2
1314          KM   SUB-BASIN 380B2
1315          KM   24-HOUR SCS TYPE II RAINFALL WAS USED TO FIND TC & R FOR THIS BASIN
1316          KM   THIS BASIN USED RAINFALL REDUCTION FACTOR OF  .999
1317          KM     L =  .55  Kb = .055  Adj. Slope =  136.0
1318          BA    .096
1319          LG    .300    .250   3.950    .580  15.000
1320          UC    .250    .187
1321          UA       0       5      16      30      65      77      84      90      94      97
1322          UA     100
              *

1323          KK  C380B2
1324          KM   HYDROGRAPH COMBINATION
1325          HC       2
              *
```

```
1326          KK  R380B2
1327          KM   CHANNEL GEOMETRY OBTAINED FROM 2' CONTOUR MAPPING.
1328          KM   ROUTING OF FLOW FROM SUB-BASINS 380B2 TO SUB-BASIN 400B2.
1329          RS       9    FLOW      -1
1330          RC    .045    .035    .045    4000    .018
1331          RX       0       1      40      46      56      62     102     103
1332          RY       3       2       2       0       0       2       2       3
              *

1333          KK   400B2
1334          KM   SUB-BASIN 400B2
1335          KM   24-HOUR SCS TYPE II RAINFALL WAS USED TO FIND TC & R FOR THIS BASIN
1336          KM   THIS BASIN USED RAINFALL REDUCTION FACTOR OF  .999
1337          KM     L =  .93  Kb = .051  Adj. Slope =  118.0
1338          BA    .194
1339          LG    .300    .250   4.150    .530    .000
1340          UC    .363    .288
1341          UA       0       5      16      30      65      77      84      90      94      97
1342          UA     100
              *

1343          KK  C400B2
1344          KM   HYDROGRAPH COMBINATION
1345          HC       2
              *

1346          KK  R400B2
1347          KM   CHANNEL GEOMETRY OBTAINED FROM 2' CONTOUR MAPPING.
1348          KM   ROUTING OF FLOW FROM SUB-BASINS 400B2 TO SUB-BASIN 420A1.
1349          RS       3    FLOW      -1
1350          RC    .045    .035    .045    1800    .018
1351          RX       0       1      40      46      56      62     102     103
1352          RY       3       2       2       0       0       2       2       3
              *
1                                        HEC-1 INPUT                                                    PAGE 36

LINE          ID.......1.......2.......3.......4.......5.......6.......7.......8.......9......10

1353          KK   420A1
1354          KM   SUB-BASIN 420A1
1355          KM   24-HOUR SCS TYPE II RAINFALL WAS USED TO FIND TC & R FOR THIS BASIN
1356          KM   THIS BASIN USED RAINFALL REDUCTION FACTOR OF  .997
1357          KM     L = 1.20  Kb = .044  Adj. Slope =  108.0
1358          BA    .566
1359          LG    .300    .270   4.250    .480  17.000
1360          UC    .387    .207
1361          UA       0       5      16      30      65      77      84      90      94      97
1362          UA     100
              *

1363          KK  D420A1
1364          KM        DIVERT FLOW INTO ONLINE  DETENTION BASIN
1365          KM   DETENTION/RETENTION BASINS LOCATED WITHIN GRAY FOX SUBDIVISION
1366          KM        MAXIMUM VOLUME DIVERSION = 11.2 acre-feet
1367          DT  B420A1    11.2
1368          DI       0   10000
1369          DQ       0   10000
              *

1370          KK  T420A1
1371          KM   RETRIEVE FLOW FROM DIVERSION INTO ONLINE BASIN
1372          DR  B420A1
              *

1373          KK  S420A1
1374          KM   RETRIEVE FLOW INTO FICTICIOUS BASIN AND BLEED OFF WITHIN 36 HOURS.
1375          KM    11.2 ACRE-FEETx43560/36x3600= 4cfs
1376          RS       1    STOR       0
1377          SV       0     .01    11.2      20
1378          SQ       0     1.0     4.0      40
              *

1379          KK   C420A
1380          KM   HYDROGRAPH COMBINATION FOR SPOOK HILL FRS
1381          HC       4
              * DDM    ***** Preserved *****

1382          KK   R390B
1383          KM   Retrive Flows diverted from CP390C to existing Thunder Mountain detention
1384          KM   basin
1385          DR  TO390B

1386          KK  R390B1
1387          KM   CHANNEL GEOMETRY OBTAINED FROM 2' CONTOUR MAPPING.
1388          RS       3    FLOW      -1
1389          RC   0.020   0.020   0.020     430   0.019
1390          RX       0       3       6       9      26      30      34      38
1391          RY       3       2       1       0       0       1       2       3
```

```
                 * DDM    ***** Updated *****
1                                    HEC-1 INPUT                                                    PAGE 37

LINE             ID.......1.......2.......3.......4.......5.......6.......7.......8.......9......10

1392             KK    385C
1393             KM   SUB-BASIN 385C
1394             KM   24-HOUR SCS TYPE II RAINFALL WAS USED TO FIND TC & R FOR THIS BASIN
1395             KM   THIS BASIN USED RAINFALL REDUCTION FACTOR OF  .997
1396             KM     L = 2.16  Kb = .039  Adj. Slope =  303.2
1397             BA    .501
1398             LG    .280    .380   5.600    .200  13.000
1399             UC    .333    .300
1400             UA       0       5      16      30      65      77      84      90      94      97
1401             UA     100
                 * DDM    ***** Updated *****

1402             KK    385B
1403             KM   SUB-BASIN 385B
1404             KM   24-HOUR SCS TYPE II RAINFALL WAS USED TO FIND TC & R FOR THIS BASIN
1405             KM   THIS BASIN USED RAINFALL REDUCTION FACTOR OF 1.000
1406             KM     L =  .82  Kb = .057  Adj. Slope =  280.2
1407             BA    .077
1408             LG    .340    .330   5.200    .250   6.000
1409             UC    .242    .281
1410             UA       0       5      16      30      65      77      84      90      94      97
1411             UA     100
                 * DDM    ***** Updated *****

1412             KK    385A
1413             KM   SUB-BASIN 385A
1414             KM   24-HOUR SCS TYPE II RAINFALL WAS USED TO FIND TC & R FOR THIS BASIN
1415             KM   THIS BASIN USED RAINFALL REDUCTION FACTOR OF 1.000
1416             KM     L =  .37  Kb = .065  Adj. Slope =  207.0
1417             BA    .018
1418             LG    .300    .250   4.150    .530  15.000
1419             UC    .196    .270
1420             UA       0       5      16      30      65      77      84      90      94      97
1421             UA     100
                 * DDM    ***** Updated *****

1422             KK    415B
1423             KM   SUB-BASIN 415B
1424             KM   24-HOUR SCS TYPE II RAINFALL WAS USED TO FIND TC & R FOR THIS BASIN
1425             KM   THIS BASIN USED RAINFALL REDUCTION FACTOR OF  .998
1426             KM     L = 1.20  Kb = .049  Adj. Slope =  303.2
1427             BA    .276
1428             LG    .300    .250   5.000    .330  24.000
1429             UC    .262    .202
1430             UA       0       5      16      30      65      77      84      90      94      97
1431             UA     100

1432             KK  CP415B
1433             KM   Combine hydrographs from 385C and 385B with runoff hydrographs from 385A
1434             KM   and 415B
1435             HC       4
                 *
1                                    HEC-1 INPUT                                                    PAGE 38

LINE             ID.......1.......2.......3.......4.......5.......6.......7.......8.......9......10

1436             KK   D415B
1437             KM   DIVERT FLOW INTO OFFLINE DETENTION BASIN
1438             KM   MAXIMUM STORAGE VOLUME FOR DIVERSION = 32 AC-FT @ 5' DEPTH.
1439             DT  BS415B
1440             DI       0     150    5000
1441             DQ       0       0    4850
                 *
                 * DDM    ***** Preserved *****

1442             KK  RT415B
1443             KM   RETRIEVE FLOW FROM DIVERSION INTO OFFLINE BASIN
1444             DR  BS415B
                 *
                 * DDM    ***** Preserved *****

1445             KK   S415B
1446             KM   RETRIEVE FLOW INTO OFFLINE BASIN AND BLEED OFF WITHIN 36 HOURS.
1447             KM      32 ACRE-FEETx43560/36x3600 = 11cfs
1448             RS       1    STOR       0
1449             SV       0     .01      32      40
1450             SQ       0       5      50      60
                 * DDM    ***** Preserved *****

1451             KK  CC415B
1452             KM   HYDROGRAPH COMBINATION OF 415 DIVERSION.
1453             HC       2
                 * DDM    ***** Preserved *****
```

```
1454          KK  R390A1
1455          KM   Route runoff hydrograph from subbasin 385B to CP390A
1456          KM   CHANNEL GEOMETRY OBTAINED FROM 2' CONTOUR MAPPING.
1457          RS       3    FLOW      -1
1458          RC   0.045   0.035   0.045    1700   0.033
1459          RX       0      14      22      29      36      44      52     109
1460          RY       4       2       1       0       0       1       2       4
              * DDM   ***** Updated *****

1461          KK    390A
1462          KM   SUB-BASIN 390A
1463          KM   24-HOUR SCS TYPE II RAINFALL WAS USED TO FIND TC & R FOR THIS BASIN
1464          KM   THIS BASIN USED RAINFALL REDUCTION FACTOR OF 1.000
1465          KM     L =  .36  Kb = .064  Adj. Slope =  164.0
1466          BA    .024
1467          LG    .300    .250   4.000    .560  15.000
1468          UC    .204    .235
1469          UA       0       5      16      30      65      77      84      90      94      97
1470          UA     100
              * DDM   ***** Preserved *****
1                                        HEC-1 INPUT                                          PAGE 39

LINE          ID.......1.......2.......3.......4.......5.......6.......7.......8.......9......10

1471          KK  CP390A
1472          KM   Combine routed hydrographs from the Oak Street detention basin with
1473          KM   runoff hydrograph from subbasin 390A
1474          HC       2
              * DDM   ***** Preserved *****

1475          KK  R390B2
1476          KM   Route combined hydrograph from CP390A to existing Thunder Mountain detention
1477          KM   basin
1478          KM   CHANNEL GEOMETRY OBTAINED FROM 2' CONTOUR MAPPING
1479          RS       3    FLOW      -1
1480          RC   0.020   0.020   0.020    1610   0.019
1481          RX       0       2       3       4      17      19      23      30
1482          RY     3.5       2       1       0       0       1       2     3.5
              * DDM   ***** Updated *****

1483          KK    390B
1484          KM   SUB-BASIN 390B
1485          KM   24-HOUR SCS TYPE II RAINFALL WAS USED TO FIND TC & R FOR THIS BASIN
1486          KM   THIS BASIN USED RAINFALL REDUCTION FACTOR OF  .999
1487          KM     L =  .68  Kb = .055  Adj. Slope =  153.0
1488          BA    .101
1489          LG    .300    .250   4.450    .450  15.000
1490          UC    .267    .232
1491          UA       0       5      16      30      65      77      84      90      94      97
1492          UA     100
              * DDM   ***** Preserved *****

1493          KK  CP390B
1494          KM   Combine routed hydrographs from CP390C and CP390A with runoff hydrograph from
1495          KM   subbasin 390B
1496          HC       3   1.31
              * DDM   ***** Preserved *****

1497          KK   S390B
1498          KM   Thunder Mountain Detention Basin, with 78-inch outlet pipe, discharge from
1499          KM   the basin can be through the pipe and out of 32-6 ft x 0.65 ft holes in
1500          KM   the wall at the southwest corner of the basin the lowest hole is at
1501          KM   elevation 1759.27 feet
1502          RS       1    STOR       0
1503          SV       0    0.01    0.45    1.77    4.38    8.09   12.61   18.16   24.98
1504          SQ       0     325     400     460     676    1450    1958    2321    2615
1505          SE    1753    1754    1756    1758    1760    1762    1764    1766    1768
              * DDM   ***** Updated *****

1506          KK  420B05
1507          KM   SUB-BASIN 420B05
1508          KM   24-HOUR SCS TYPE II RAINFALL WAS USED TO FIND TC & R FOR THIS BASIN
1509          KM   THIS BASIN USED RAINFALL REDUCTION FACTOR OF 1.000
1510          KM     L =  .41  Kb = .061  Adj. Slope =  159.0
1511          BA    .040
1512          LG    .300    .250   4.650    .390  15.000
1513          UC    .213    .204
1514          UA       0       5      16      30      65      77      84      90      94      97
                                         HEC-1 INPUT                                          PAGE 40

LINE          ID.......1.......2.......3.......4.......5.......6.......7.......8.......9......10

1515          UA     100
              * DDM   ***** Preserved *****

1516          KK  CPSD05
1517          KM   Combine routed flow in storm drain from Thunder Mountain Detention basin
1518          KM   with runoff from subbasin 420B05
```

```
1519          HC        2
              * DDM    ***** Updated *****

1520          KK  420B10
1521          KM   SUB-BASIN 420B10
1522          KM   24-HOUR SCS TYPE II RAINFALL WAS USED TO FIND TC & R FOR THIS BASIN
1523          KM   THIS BASIN USED RAINFALL REDUCTION FACTOR OF 1.000
1524          KM     L =  .49  Kb = .063  Adj. Slope =  159.0
1525          BA    .025
1526          LG    .300    .250   3.850    .620  15.000
1527          UC    .242    .354
1528          UA       0       5      16      30      65      77      84      90      94      97
1529          UA     100
              * DDM    ***** Preserved *****

1530          KK  CPSD10
1531          KM   Combine routed flow in storm drain from CPSD05 with runoff from subbasin
1532          KM   420B10
1533          HC        2
              * DDM    ***** Updated *****

1534          KK  420B15
1535          KM   SUB-BASIN 420B15
1536          KM   24-HOUR SCS TYPE II RAINFALL WAS USED TO FIND TC & R FOR THIS BASIN
1537          KM   THIS BASIN USED RAINFALL REDUCTION FACTOR OF 1.000
1538          KM     L =  .36  Kb = .068  Adj. Slope =  133.0
1539          BA    .011
1540          LG    .300    .250   3.850    .620  15.000
1541          UC    .229    .416
1542          UA       0       5      16      30      65      77      84      90      94      97
1543          UA     100
              * DDM    ***** Preserved *****

1544          KK  CPSD15
1545          KM   Combine routed flow in storm drain from CPSD10 with runoff from subbasin
1546          KM   420B15
1547          HC        2
              * DDM    ***** Updated *****

1548          KK  420B20
1549          KM   SUB-BASIN 420B20
1550          KM   24-HOUR SCS TYPE II RAINFALL WAS USED TO FIND TC & R FOR THIS BASIN
1551          KM   THIS BASIN USED RAINFALL REDUCTION FACTOR OF 1.000
1552          KM     L =  .48  Kb = .067  Adj. Slope =  144.0
1553          BA    .014
1554          LG    .300    .250   4.200    .520  15.000
1555          UC    .254    .512
1556          UA       0       5      16      30      65      77      84      90      94      97
1557          UA     100
              * DDM    ***** Preserved *****
```



```
LINE          ID.......1.......2.......3.......4.......5.......6.......7.......8.......9......10

1558          KK  CPSD20
1559          KM   Combine routed flow in storm drain from CPSD15 with runoff from subbasin
1560          KM   420B20
1561          HC        2
              * DDM    ***** Updated *****

1562          KK  420B25
1563          KM   SUB-BASIN 420B25
1564          KM   24-HOUR SCS TYPE II RAINFALL WAS USED TO FIND TC & R FOR THIS BASIN
1565          KM   THIS BASIN USED RAINFALL REDUCTION FACTOR OF  .999
1566          KM     L = 1.90  Kb = .056  Adj. Slope =  203.5
1567          BA    .084
1568          LG    .300    .250   3.880    .610  15.000
1569          UC    .496   1.165
1570          UA       0       3       5       8      12      20      43      75      90      96
1571          UA     100

1572          KK  SFIRES
1573          KM   Detention basin at Mesa Fire Station #16 at NW corner of McDowell Rd. and
1574          KM   80th Street.  Detention volumes taken from as-built plans dated 5/22/00,
1575          KM   prepared by AGRA Infrastructure, Inc.
1576          RS       1    STOR       0
1577          SV       0    0.03    0.14    0.37    0.53    0.73
1578          SQ       0       7      17      25      27      31
1579          SE      92      93      94      95      96      97
              * DDM    ***** Preserved *****

1580          KK  CPSD25
1581          KM   Combine routed flow in storm drain from CPSD20 with runoff from subbasin
1582          KM   420B25
1583          HC        2
              * DDM    ***** Updated *****

1584          KK  420B30
1585          KM   SUB-BASIN 420B30
```

```
1586          KM   24-HOUR SCS TYPE II RAINFALL WAS USED TO FIND TC & R FOR THIS BASIN
1587          KM   THIS BASIN USED RAINFALL REDUCTION FACTOR OF 1.000
1588          KM     L =  .87  Kb = .059  Adj. Slope =  144.0
1589          BA    .055
1590          LG    .300    .250   4.400    .460  15.000
1591          UC    .342    .525
1592          UA       0       5      16      30      65      77      84      90      94      97
1593          UA     100
              * DDM   ***** Preserved *****

1594          KK  CPSD30
1595          KM   Combine routed flow in storm drain from CPSD25 with runoff from subbasin
1596          KM   420B30
1597          HC       2
              * DDM   ***** Updated *****
1                                        HEC-1 INPUT                                          PAGE 42

LINE          ID.......1.......2.......3.......4.......5.......6.......7.......8.......9......10

1598          KK  420B35
1599          KM   SUB-BASIN 420B35
1600          KM   24-HOUR SCS TYPE II RAINFALL WAS USED TO FIND TC & R FOR THIS BASIN
1601          KM   THIS BASIN USED RAINFALL REDUCTION FACTOR OF 1.000
1602          KM     L =  .40  Kb = .062  Adj. Slope =  112.0
1603          BA    .035
1604          LG    .300    .260   3.530    .770  15.000
1605          UC    .246    .253
1606          UA       0       5      16      30      65      77      84      90      94      97
1607          UA     100

1608          KK  SCHRCH
1609          KM   Detention basin at Falcon Hill Ward Church of Jesus Christ of Latter-
1610          KM   Day Saints at NW corner of McDowell Rd. and 78th Street.  Detention
1611          KM   volumes taken from as-built plans dated 7-22-03, prepared by Rosendahl
1612          KM   & Associates, Inc.
1613          RS       1    STOR       0
1614          SV       0    0.09    0.23    0.49    0.66    0.71    0.84
1615          SQ       0     1.4     2.2     5.5     6.0     6.4     157
1616          SE    1663    1664    1665    1666  1666.5    1667    1668
              * DDM   ***** Preserved *****

1617          KK  CPSD35
1618          KM   Combine routed flow in storm drain from CPSD30 with runoff from subbasin
1619          KM   420B35
1620          HC       2
              * DDM   ***** Updated *****

1621          KK  420B40
1622          KM   SUB-BASIN 420B40
1623          KM   24-HOUR SCS TYPE II RAINFALL WAS USED TO FIND TC & R FOR THIS BASIN
1624          KM   THIS BASIN USED RAINFALL REDUCTION FACTOR OF 1.000
1625          KM     L =  .17  Kb = .073  Adj. Slope =  118.0
1626          BA    .005
1627          LG    .300    .260   3.700    .680  15.000
1628          UC    .171    .258
1629          UA       0       5      16      30      65      77      84      90      94      97
1630          UA     100
              * DDM   ***** Preserved *****

1631          KK  CPSD40
1632          KM   Combine routed flow in storm drain from CPSD35 with runoff from subbasin
1633          KM   420B40
1634          HC       2
              * DDM   ***** Updated *****

1635          KK  420B45
1636          KM   SUB-BASIN 420B45
1637          KM   24-HOUR SCS TYPE II RAINFALL WAS USED TO FIND TC & R FOR THIS BASIN
1638          KM   THIS BASIN USED RAINFALL REDUCTION FACTOR OF 1.000
1639          KM     L =  .25  Kb = .071  Adj. Slope =  120.0
1640          BA    .007
1641          LG    .300    .260   3.630    .710  15.000
1642          UC    .204    .354
1                                        HEC-1 INPUT                                          PAGE 43

LINE          ID.......1.......2.......3.......4.......5.......6.......7.......8.......9......10

1643          UA       0       5      16      30      65      77      84      90      94      97
1644          UA     100
              * DDM   ***** Preserved *****

1645          KK  CPSD45
1646          KM   Combine routed flow in storm drain from CPSD40 with runoff from subbasin
1647          KM   420B45
1648          HC       2
              * DDM   ***** Preserved *****

1649          KK  TOLSCH
1650          KO       3
```

```
1651          KM   Divert out of storm drain through splitter structure.  Divert flow amount
1652          KM   such that the flow at CP415A is less than or equal to 1540 cfs, the existing
1653          KM   peak discharge of LasSendas channel.
1654          DT    MCDB
1655          DI       0     331     419     558     658     693     728     901    1043
1656          DQ       0       0      61     176     262     292     323     473     594
              * DDM   ***** Updated *****

1657          KK     440
1658          KM   SUB-BASIN 440
1659          KM   24-HOUR SCS TYPE II RAINFALL WAS USED TO FIND TC & R FOR THIS BASIN
1660          KM   THIS BASIN USED RAINFALL REDUCTION FACTOR OF 1.000
1661          KM     L =  .40  Kb = .039  Adj. Slope =  315.0
1662          BA    .080
1663          LG    .190    .380   6.400    .140  13.000
1664          UC    .129    .077
1665          UA       0       3       5       8      12      20      43      75      90      96
1666          UA     100
              * DDM   ***** Preserved *****

1667          KK     R70
1668          KM   ROUTE FLOW FROM SUB-BASIN 440 TO C108
1669          RS       2    FLOW      -1
1670          RC     .05    .035     .05    2250     .08
1671          RX    1000    1025    1050    1070    1075    1095    1120    1145
1672          RY      30    22.9    15.7      10      10    15.7    22.9      30
              * DDM   ***** Updated *****

1673          KK     441
1674          KM   SUB-BASIN 441
1675          KM   24-HOUR SCS TYPE II RAINFALL WAS USED TO FIND TC & R FOR THIS BASIN
1676          KM   THIS BASIN USED RAINFALL REDUCTION FACTOR OF 1.000
1677          KM     L =  .28  Kb = .069  Adj. Slope =  315.0
1678          BA    .010
1679          LG    .300    .250   5.600    .220   5.000
1680          UC    .150    .225
1681          UA       0       5      16      30      65      77      84      90      94      97
1682          UA     100
              * DDM   ***** Preserved *****
```



```
LINE          ID.......1.......2.......3.......4.......5.......6.......7.......8.......9......10

1683          KK    C108
1684          KM   COMBINE HYDROGRAPHS FROM SUB-BASINS 440 & 441
1685          HC       2
              * DDM   ***** Preserved *****

1686          KK      D4
1687          KM        SPLIT FLOW WITH TWO 42 INCH PIPES TO WEST AND SOUTH
1688          DT   SPLIT
1689          DI       0      14      40      82     120     154     180
1690          DQ       0       7      20      41      60      77      90
              * DDM   ***** Preserved *****

1691          KK    R108
1692          KM        ROUTE FLOW FROM SUB-BASIN C108 TO C67
1693          RS       2    FLOW      -1
1694          RC     .05    .035     .05    3200      .1
1695          RX    1000    1025    1050    1070    1075    1095    1120    1145
1696          RY      30    22.9    15.7      10      10    15.7    22.9      30
              * DDM   ***** Updated *****

1697          KK     442
1698          KM   SUB-BASIN 442
1699          KM   24-HOUR SCS TYPE II RAINFALL WAS USED TO FIND TC & R FOR THIS BASIN
1700          KM   THIS BASIN USED RAINFALL REDUCTION FACTOR OF  .999
1701          KM     L =  .83  Kb = .055  Adj. Slope =  274.2
1702          BA    .100
1703          LG    .300    .270   3.290    .770   5.000
1704          UC    .258    .264
1705          UA       0       5      16      30      65      77      84      90      94      97
1706          UA     100
              * DDM   ***** Preserved *****

1707          KK     C67
1708          KM   COMBINE FLOW FROM SUB-BASIN 442 & DIV4
1709          HC       2
              * DDM   ***** Preserved *****

1710          KK      D6
1711          KM        OFFLINE BASIN WITH 25 FOOT WEIR SET AT 2.5 FEET ABOVE BOTTOM OF CHANNEL
1712          KM        FLOW CONTINUES BEYOND BASIN THROUGH 2-30" PIPES
1713          DT  BASIN4     3.3
1714          DI       0      10      32      44    79.9   132.5     198   272.9   356.8
1715          DQ       0       0       0       0    23.9    67.5     124   190.9   266.8
              * DDM   ***** Preserved *****

1716          KK    RTD6
```

```
1717          KM   RETRIEVE FLOW FROM DIVERSION INTO OFFLINE BASIN
1718          DR  BASIN4
              * DDM   ***** Preserved *****
                                        HEC-1 INPUT                                                    PAGE 45

LINE          ID.......1.......2.......3.......4.......5.......6.......7.......8.......9......10


1719          KK     SD6
1720          KM   RETRIEVE FLOW INTO FICTICIOUS BASIN AND BLEED OFF WITHIN 36 HOURS.
1721          KM     3.3 ACRE-FEETx43560/36x3600=1.1cfs
1722          RS       1    STOR       0
1723          SV       0     .01     3.3
1724          SQ       0     0.2     1.1
              * DDM   ***** Preserved *****

1725          KK     CD6
1726          KM   HYDROGRAPH COMBINATION FOR OFFLINE BASIN BLEEDOFF
1727          HC       2
              * DDM   ***** Updated *****

1728          KK     443
1729          KM   SUB-BASIN 443
1730          KM   24-HOUR SCS TYPE II RAINFALL WAS USED TO FIND TC & R FOR THIS BASIN
1731          KM   THIS BASIN USED RAINFALL REDUCTION FACTOR OF 1.000
1732          KM     L =  .71  Kb = .050  Adj. Slope =  315.0
1733          BA    .080
1734          LG    .250    .190   8.000    .080  10.000
1735          UC    .196    .194
1736          UA       0       5      16      30      65      77      84      90      94      97
1737          UA     100
              * DDM   ***** Preserved *****

1738          KK     D66
1739          KM        DIVERT FLOW INTO 3 NATURAL WASHES WITH ONE 24" PIPE IN EACH WASH.
1740          KM        EACH PIPE CAPACITY BASED ON 4 FEET OF HEAD
1741          DT   WSH66
1742          DI       0      78     100     200
1743          DQ       0      78      78      78
              * DDM   ***** Preserved *****

1744          KK    R113
1745          KM        ROUTE FLOW FROM C113 TO C114
1746          RS       1    FLOW      -1
1747          RC    .019    .019    .019    1300    .029
1748          RX    1000    1004    1008    1012    1018    1022    1026    1030
1749          RY      17   15.33   12.67      10      10   12.67   15.33      17
              * DDM   ***** Preserved *****

1750          KK    C114
1751          KM        COMBINE HYDROGRAPHS FROM SUB-BASIN 67 AND C113
1752          HC       2
              * DDM   ***** Updated *****

1753          KK     444
1754          KM   SUB-BASIN 444
1755          KM   24-HOUR SCS TYPE II RAINFALL WAS USED TO FIND TC & R FOR THIS BASIN
1756          KM   THIS BASIN USED RAINFALL REDUCTION FACTOR OF 1.000
1757          KM     L =  .33  Kb = .034  Adj. Slope =  315.0
1758          BA    .040
1759          LG    .130    .350   4.450    .320   1.000
1760          UC    .112    .084
1                                       HEC-1 INPUT                                                    PAGE 46

LINE          ID.......1.......2.......3.......4.......5.......6.......7.......8.......9......10

1761          UA       0       3       5       8      12      20      43      75      90      96
1762          UA     100
              * DDM   ***** Preserved *****

1763          KK     R58
1764          KM   ROUTE FLOW FROM SUB-BASIN 444 TO C107
1765          RS       2    FLOW      -1
1766          RC     .05    .035     .05    2370   .0516
1767          RX    1000    1010    1020    1050    1055    1085    1095    1105
1768          RY      19      18      17      10      10      17      18      19
              * DDM   ***** Updated *****

1769          KK     445
1770          KM   SUB-BASIN 445
1771          KM   24-HOUR SCS TYPE II RAINFALL WAS USED TO FIND TC & R FOR THIS BASIN
1772          KM   THIS BASIN USED RAINFALL REDUCTION FACTOR OF  .999
1773          KM     L =  .82  Kb = .036  Adj. Slope =  315.0
1774          BA    .190
1775          LG    .170    .320   3.470    .590   3.000
1776          UC    .192    .130
1777          UA       0       5      16      30      65      77      84      90      94      97
1778          UA     100
              * DDM   ***** Preserved *****
```

```
1779          KK    C107
1780          KM   COMBINE HYDROGRAPHS FROM SUB-BASINS 444 & 445
1781          HC       2
              * DDM   ***** Preserved *****

1782          KK    R107
1783          KM        ROUTE FLOW FROM C107 TO C109
1784          RS       2    FLOW      -1
1785          RC     .05    .035     .05     700   .0516
1786          RX    1000    1010    1020    1050    1055    1085    1095    1105
1787          RY      19      18      17      10      10      17      18      19
              * DDM   ***** Preserved *****

1788          KK    RTB2
1789          KM        RETRIEVE DIVERTED FLOW FROM BASIN 1
1790          DR   SPLIT
              * DDM   ***** Preserved *****

1791          KK  RSPLIT
1792          KM        ROUTE FLOW FROM SPLIT TO C109
1793          RS       1    FLOW      -1
1794          RC     .05    .035     .05     800     .05
1795          RX    1000    1025    1050    1070    1075    1095    1120    1145
1796          RY      30    22.9    15.7      10      10    15.7    22.9      30
              * DDM   ***** Updated *****
1                                   HEC-1 INPUT                                          PAGE 47

LINE          ID.......1.......2.......3.......4.......5.......6.......7.......8.......9......10


1797          KK     446
1798          KM   SUB-BASIN 446
1799          KM   24-HOUR SCS TYPE II RAINFALL WAS USED TO FIND TC & R FOR THIS BASIN
1800          KM   THIS BASIN USED RAINFALL REDUCTION FACTOR OF 1.000
1801          KM     L =  .46  Kb = .061  Adj. Slope =  303.9
1802          BA    .040
1803          LG    .270    .250   4.500    .400  19.000
1804          UC    .183    .189
1805          UA       0       5      16      30      65      77      84      90      94      97
1806          UA     100
              * DDM   ***** Preserved *****

1807          KK    C109
1808          KM        COMBINE HYDROGRAPHS FROM COMBINES C107 AND C108
1809          HC       3
              * DDM   ***** Preserved *****

1810          KK      D5
1811          KM        DIVERT FLOW INTO WASHES TOWARDS WEST
1812          KM        DIVERSION THROUGH 36" PIPE WITH 3 FEET OF HEAD
1813          DT  WSH404
1814          DI       0    40.7    71.2   121.6     190     276   379.4   500.6
1815          DQ       0      35      35      35      35      35      35      35
              * DDM   ***** Preserved *****

1816          KK    R109
1817          KM        ROUTE FLOW FROM C109 TO C110
1818          RS       1    FLOW      -1
1819          RC    .019    .019    .019    3080     .05
1820          RX    1000    1005    1010    1015    1025    1030    1035    1040
1821          RY   13.75    12.5   11.25      10      10   11.25    12.5   13.75
              * DDM   ***** Updated *****

1822          KK     447
1823          KM   SUB-BASIN 447
1824          KM   24-HOUR SCS TYPE II RAINFALL WAS USED TO FIND TC & R FOR THIS BASIN
1825          KM   THIS BASIN USED RAINFALL REDUCTION FACTOR OF  .999
1826          KM     L =  .49  Kb = .056  Adj. Slope =  221.0
1827          BA    .090
1828          LG    .250    .270   3.350    .870  30.000
1829          UC    .208    .145
1830          UA       0       5      16      30      65      77      84      90      94      97
1831          UA     100
              * DDM   ***** Preserved *****

1832          KK   RT404
1833          KM        RETRIEVE DIVERTED FLOW FOR WASH 109
1834          DR  WSH404
              * DDM   ***** Preserved *****
                                    HEC-1 INPUT                                          PAGE 48

LINE          ID.......1.......2.......3.......4.......5.......6.......7.......8.......9......10


1835          KK    R404
1836          KM        ROUTE FLOW FROM C110 TO C110
1837          RS       6    FLOW      -1
1838          RC    .019    .019    .019    3540     .03
1839          RX    1000    1012    1016    1020    1025    1029    1033    1045
1840          RY      15      12      11      10      10      11      12      15
```

```
                * DDM    ***** Preserved *****

1841            KK     C110
1842            KM    COMBINE HYDROGRAPHS FROM SUB-BASIN 447 AND R404
1843            HC        3
                * DDM    ***** Preserved *****

1844            KK     R110
1845            KM         ROUTE FLOW FROM C110 TO C115
1846            RS        1     FLOW      -1
1847            RC     .019     .019     .019      580    .0291
1848            RX     1000     1012     1016     1020     1035     1039     1043     1055
1849            RY       15       12       11       10       10       11       12       15
                * DDM    ***** Preserved *****

1850            KK     C115
1851            KM         COMBINE HYDROGRAPHS FROM C114 AND C110
1852            HC        2
                * DDM    ***** Preserved *****

1853            KK     R115
1854            KM         ROUTE FLOW FROM C115 TO Sub 453
1855            RS        1     FLOW      -1
1856            RC     .019     .019     .019     2125     .029
1857            RX     1000     1012     1016     1020     1035     1039     1043     1055
1858            RY       15       12       11       10       10       11       12       15
                * DDM    ***** Updated *****

1859            KK      448
1860            KM    SUB-BASIN 448
1861            KM    24-HOUR SCS TYPE II RAINFALL WAS USED TO FIND TC & R FOR THIS BASIN
1862            KM    THIS BASIN USED RAINFALL REDUCTION FACTOR OF 1.000
1863            KM      L =  .36  Kb = .042  Adj. Slope =  315.0
1864            BA     .045
1865            LG     .170     .310    4.200     .390   11.000
1866            UC     .133     .102
1867            UA        0        5       16       30       65       77       84       90       94       97
1868            UA      100
                * DDM    ***** Updated *****

1869            KK      449
1870            KM    SUB-BASIN 449
1871            KM    24-HOUR SCS TYPE II RAINFALL WAS USED TO FIND TC & R FOR THIS BASIN
1872            KM    THIS BASIN USED RAINFALL REDUCTION FACTOR OF 1.000
1873            KM      L =  .40  Kb = .054  Adj. Slope =  315.0
1874            BA     .050
1875            LG     .260     .280    3.500     .640    6.000
1876            UC     .167     .134
```



```
LINE            ID.......1.......2.......3.......4.......5.......6.......7.......8.......9......10

1877            UA        0        5       16       30       65       77       84       90       94       97
1878            UA      100
                * DDM    ***** Preserved *****

1879            KK    C6364
1880            KM    COMBINE HYDROGRAPHS FROM SUB-BASINS 448 & 449
1881            HC        2
                * DDM    ***** Preserved *****

1882            KK    R6364
1883            KM    ROUTE FLOW FROM C116 AND SUB-BASINS 448 AND 449
1884            RS        5     FLOW      -1
1885            RC      .05      .035      .05     4375    .0333
1886            RX     1000     1027     1053     1080     1090     1117     1143     1170
1887            RY       15    13.33    11.67       10       10    11.67    13.33       15
                * DDM    ***** Updated *****

1888            KK      450
1889            KM    SUB-BASIN 450
1890            KM    24-HOUR SCS TYPE II RAINFALL WAS USED TO FIND TC & R FOR THIS BASIN
1891            KM    THIS BASIN USED RAINFALL REDUCTION FACTOR OF 1.000
1892            KM      L =  .85  Kb = .057  Adj. Slope =  210.5
1893            BA     .070
1894            LG     .340     .350    3.630     .570    4.000
1895            UC     .296     .383
1896            UA        0        3        5        8       12       20       43       75       90       96
1897            UA      100
                * DDM    ***** Updated *****

1898            KK      451
1899            KM    SUB-BASIN 451
1900            KM    24-HOUR SCS TYPE II RAINFALL WAS USED TO FIND TC & R FOR THIS BASIN
1901            KM    THIS BASIN USED RAINFALL REDUCTION FACTOR OF 1.000
1902            KM      L =  .57  Kb = .063  Adj. Slope =  175.0
1903            BA     .025
1904            LG     .340     .340    3.290     .750    3.000
1905            UC     .271     .453
1906            UA        0        3        5        8       12       20       43       75       90       96
```

```
1907          UA     100
              * DDM   ***** Preserved *****

1908          KK    C451
1909          KM   COMBINE HYDROGRAPHS FROM SUB-BASINS 450 & 451
1910          HC       2
              * DDM   ***** Preserved *****

1911          KK    RT66
1912          KM        RETRIEVE DIVERTED FLOW FROM SUB-BASIN 66
1913          DR   WSH66
              * DDM   ***** Updated *****
1                                   HEC-1 INPUT                                                    PAGE 50

LINE          ID.......1.......2.......3.......4.......5.......6.......7.......8.......9......10


1914          KK     452
1915          KM   SUB-BASIN 452
1916          KM   24-HOUR SCS TYPE II RAINFALL WAS USED TO FIND TC & R FOR THIS BASIN
1917          KM   THIS BASIN USED RAINFALL REDUCTION FACTOR OF 1.000
1918          KM     L =  .43  Kb = .055  Adj. Slope =  315.0
1919          BA    .040
1920          LG    .260    .280   3.700    .550   9.000
1921          UC    .171    .166
1922          UA       0       5      16      30      65      77      84      90      94      97
1923          UA     100
              * DDM   ***** Preserved *****

1924          KK   C6465
1925          KM   COMBINE HYDROGRAPHS FROM SUB-BASINS 443 AND 452
1926          HC       2
              * DDM   ***** Preserved *****

1927          KK   R6566
1928          KM        ROUTE FLOW FROM DIVERSIONS 65 AND 66 TO C116
1929          RS       3    FLOW      -1
1930          RC     .05    .035     .05    2435   .0282
1931          RX    1000    1045    1090    1150    1160    1220    1265    1310
1932          RY      25      23      20      10      10      20      23      25
              * DDM   ***** Preserved *****

1933          KK    C116
1934          KM   COMBINE HYDROGRAPHS FROM SUB-BASINS 450 & 451 AND R6364 & R6465
1935          HC       3
              * DDM   ***** Preserved *****

1936          KK  BASIN5
1937          KM        RESERVOIR WITHIN PARCEL 31      2-48 INCH PIPES AT OUTFALL
1938          KM        BASIN 5 FEET DEEP
1939          RS       1    ELEV       0
1940          SV       0     4.5     9.9
1941          SQ       0      69     190
1942          SE       0     2.5       5
              * DDM   ***** Preserved *****

1943          KK    R116
1944          KM   ROUTE FLOW FROM C116 TO C117
1945          RS       2    FLOW      -1
1946          RC     .05    .035     .05    1300   .0333
1947          RX    1000    1100    1200    1300    1320    1420    1520    1620
1948          RY      13      12      11      10      10      11      12      13
              * DDM   ***** Updated *****

1949          KK     453
1950          KM   SUB-BASIN 453
1951          KM   24-HOUR SCS TYPE II RAINFALL WAS USED TO FIND TC & R FOR THIS BASIN
1952          KM   THIS BASIN USED RAINFALL REDUCTION FACTOR OF 1.000
1953          KM     L =  .58  Kb = .058  Adj. Slope =  138.0
1954          BA    .060
1955          LG    .290    .300   3.290    .820  18.000
1                                   HEC-1 INPUT                                                    PAGE 51

LINE          ID.......1.......2.......3.......4.......5.......6.......7.......8.......9......10

1956          UC    .275    .284
1957          UA       0       5      16      30      65      77      84      90      94      97
1958          UA     100
              * DDM   ***** Preserved *****

1959          KK    C117
1960          KM   COMBINE HYDROGRAPHS FROM SUB-BASIN 453 AND R116
1961          HC       2
              * DDM   ***** Preserved *****

1962          KK    C118
1963          KM   COMBINE HYDROGRAPHS FROM R115 AND C117
1964          HC       2
              * DDM   ***** Preserved *****
```

```
1965          KK    R118
1966          KM        ROUTE FLOW FROM C118 TO  DIV7
1967          RS       1    FLOW      -1
1968          RC    .019    .019    .019    1500    .024
1969          RX    1000    1012    1016    1020    1035    1039    1043    1055
1970          RY      15      12      11      10      10      11      12      15
              * DDM   ***** Preserved *****

1971          KK      D7
1972          KM        OFFLINE BASIN AT NORTH MOUNTAIN RIDGE   FLOWS ENTER BASIN OVER
1973          KM        30' WEIR SET AT 5.3' ABOVE THE CHANNEL BOTTOM, Vol = 3.6 A-F
1974          DT  BASIN6     3.6
1975          DI       0     363     487     563     645     900
1976          DQ       0       2      10      15      25     260
              * DDM   ***** Preserved *****

1977          KK    RTD7
1978          KM   RETRIEVE FLOW FROM DIVERSION INTO OFFLINE BASIN
1979          DR  BASIN6
              * DDM   ***** Preserved *****

1980          KK     SD7
1981          KM   RETRIEVE FLOW INTO FICTICIOUS BASIN AND BLEED OFF WITHIN 36 HOURS.
1982          KM     3.6 ACRE-FEETx43560/36x3600=1.2cfs
1983          RS       1    STOR       0
1984          SV       0     .01     3.6     4.0
1985          SQ       0     0.2     1.2     1.5
              * DDM   ***** Preserved *****

1986          KK     CD7
1987          KM   HYDROGRAPH COMBINATION FOR OFFLINE BASIN BLEEDOFF
1988          HC       2
              * DDM   ***** Updated *****

1989          KK     454
1990          KM   SUB-BASIN 454
1991          KM   24-HOUR SCS TYPE II RAINFALL WAS USED TO FIND TC & R FOR THIS BASIN
1992          KM   THIS BASIN USED RAINFALL REDUCTION FACTOR OF  .999
1993          KM     L = 1.23  Kb = .051  Adj. Slope =  163.0
1994          BA    .180
```



```
LINE          ID.......1.......2.......3.......4.......5.......6.......7.......8.......9......10

1995          LG    .300    .310   3.780    .560  14.000
1996          UC    .379    .395
1997          UA       0       5      16      30      65      77      84      90      94      97
1998          UA     100
              *
              * DDM   ***** Preserved *****

1999          KK    C454
2000          KM        COMBINE HYDROGRAPHS FROM SUB-BASIN 454 AND CDIV7
2001          HC       2
              * DDM   ***** Preserved *****

2002          KK    R454
2003          KM   CHANNEL GEOMETRY OBTAINED FROM 2' CONTOUR MAPPING.
2004          KM   ROUTE FLOW FROM C454 TO 415C
2005          RS       3    FLOW      -1
2006          RC    .045    .035    .045    2200    .009
2007          RX       0      .5       1      33      42      67    67.5      68
2008          RY       5       4       4       0       0       6       6       6
              * DDM   ***** Updated *****

2009          KK    415A
2010          KM   SUB-BASIN 415A
2011          KM   24-HOUR SCS TYPE II RAINFALL WAS USED TO FIND TC & R FOR THIS BASIN
2012          KM   THIS BASIN USED RAINFALL REDUCTION FACTOR OF  .998
2013          KM     L = 1.21  Kb = .049  Adj. Slope =  140.0
2014          BA    .280
2015          LG    .300    .260   3.630    .710  15.000
2016          UC    .400    .322
2017          UA       0       5      16      30      65      77      84      90      94      97
2018          UA     100
              * DDM   ***** Preserved *****

2019          KK  CP415A
2020          KM   Combine contributing hydrographs to the Las Sendas channel.  This
2021          KM   includes routed hydrographs from 415B and R454, flow diverted directly into
2022          KM   the channel from CPSD45, and the runoff hydrograph from subbasin 415A
2023          HC       3
              *
              * DDM   ***** Preserved *****

2024          KK   RMCDB
2025          KO       3
2026          KM   Retrieve flow that remained in the storm drain and goes to the McDowell Road
2027          KM   detention basin
2028          DR    MCDB
```

```
                 * DDM    ***** Preserved *****

2029             KK   SMCDB
2030             KM   McDowell Road Basin - outlet is a 48-inch storm drain with restricter to the Las Sendas
2031             KM   channel
2032             RS       1    STOR       0
2033             SV       0    0.23    0.57    1.01    1.56    2.23    3.02    3.93    4.99    6.20
2034             SV    7.58    9.15
2035             SQ       0      16      35      54      71      86      97     107     116     127
1                                                HEC-1 INPUT                                          PAGE 53

LINE             ID.......1.......2.......3.......4.......5.......6.......7.......8.......9......10

2036             SQ     144     171
2037             SE    1630    1631    1632    1633    1634    1635    1636    1637    1638    1639
2038             SE    1640    1641
                 *
                 * DDM    ***** Preserved *****

2039             KK  CPLSCH
2040             KM   Combine discharge from McDowell Road basin with the flows in the Las Sendas
2041             KM   channel
2042             HC       2
                 *
                 * DDM    ***** Preserved *****

2043             KK   R415A
2044             KM   CHANNEL GEOMETRY OBTAINED FROM 2' CONTOUR MAPPING.
2045             KM   ROUTING OF FLOW FROM C415A TO 455C
2046             RS       2    FLOW      -1
2047             RC    .045     .03    .045    4100    .024
2048             RX       0      .5       1       8      16      23    23.5      24
2049             RY       8       8       8       0       0       8       8       8
                 * DDM    ***** Updated *****

2050             KK     455
2051             KM   SUB-BASIN 455
2052             KM   24-HOUR SCS TYPE II RAINFALL WAS USED TO FIND TC & R FOR THIS BASIN
2053             KM   THIS BASIN USED RAINFALL REDUCTION FACTOR OF  .993
2054             KM     L = 1.70  Kb = .041  Adj. Slope =  146.0
2055             BA   1.111
2056             LG    .270    .280   3.700    .640  24.000
2057             UC    .421    .204
2058             UA       0       5      16      30      65      77      84      90      94      97
2059             UA     100
                 * DDM    ***** Preserved *****

2060             KK    D455
2061             KM        DIVERT FLOW INTO ONLINE  DETENTION BASIN
2062             KM   DETENTION/RETENTION BASINS LOCATED WITHIN LAS SENDAS ADDENDUM III
2063             KM   FOR BASIN #: 30      34      43      47&58
2064             KM        MAXIMUM VOLUME DIVERSION = 74.1 acre-feet
2065             DT   BS455    74.1
2066             DI       0   10000
2067             DQ       0   10000
                 * DDM    ***** Preserved *****

2068             KK   RT455
2069             KM   RETRIEVE FLOW FROM DIVERSION INTO ONLINE BASIN
2070             DR   BS455
                 * DDM    ***** Preserved *****

2071             KK    S455
2072             KM   RETRIEVE FLOW INTO FICTICIOUS BASIN AND BLEED OFF WITHIN 36 HOURS.
2073             KM    74.1 ACRE-FEETx43560/36x3600=25cfs
2074             RS       1    STOR       0
2075             SV       0     .01    74.1   100.0
2076             SQ       0     3.0      25   250.0
                 * DDM    ***** Preserved *****
1                                                HEC-1 INPUT                                          PAGE 54

LINE             ID.......1.......2.......3.......4.......5.......6.......7.......8.......9......10

2077             KK    C455
2078             KM   HYDROGRAPH COMBINATION FOR SUB-BASIN 455 AND DIVERTED BASIN STORAGE OF 455
2079             HC       2
                 *

2080             KK   CC455
2081             KM  HYDROGRAPH COMBINATION OF 420A, R415A AND C455
2082             HC       3
                 * DDM    ***** Preserved *****

2083             KK    S440
2084             KM   SPOOK HILL FRS PLANS DATED 6/15/77
2085             KM   OUTLET PIPE=7'x7.5'RCBC; L=70 INLET INV.=1566; OUTLET INV.=1566
2086             KM   EMERGENCY SPILLWAY ELEV.=1582; PRINCIPLE SPILLWAY ELEV.=1577.5
2087             KM   STORAGE VOLUME BELOW PRINCIPLE SPILLWAY FOR SEDIMENT = 271 ACRE-FEET
2088             RS       1    STOR       0
```

```
2089          SV     0.0      81   211.0  265.72  692.96  896.16  1120.0 1630.34  2230.9 3311.68
2090          SQ     0.0     1.0     3.0     8.0  515.00  780.00  825.00  3184.7  7426.0 16007.3
2091          SE   577.0  578.00  579.00  579.36  581.86  582.86  583.86  585.86  587.86  590.86
              * DDM   ***** Preserved *****

2092          KK    R455
2093          KM   ROUTE FLOW FROM SPOOK HILL FRS TO SUB-BASIN 480
2094          RS      15    FLOW      -1
2095          RC    .035    .025    .035    7000   .0002
2096          RX       0       1       2      28      58      84      85      86
2097          RY    13.5    13.5    13.5       0       0    13.5    13.5    13.5
              * DDM   ***** Updated *****

2098          KK     480
2099          KM   SUB-BASIN 480
2100          KM   24-HOUR SCS TYPE II RAINFALL WAS USED TO FIND TC & R FOR THIS BASIN
2101          KM   THIS BASIN USED RAINFALL REDUCTION FACTOR OF  .996
2102          KM     L = 1.21  Kb = .042  Adj. Slope =  165.0
2103          BA    .731
2104          LG    .270    .270   3.580    .730  27.000
2105          UC    .325    .148
2106          UA       0       5      16      30      65      77      84      90      94      97
2107          UA     100
              * DDM   ***** Preserved *****

2108          KK    D480
2109          KM        DIVERT FLOW INTO ONLINE  DETENTION BASIN
2110          KM   DETENTION/RETENTION BASINS LOCATED WITHIN LAS SENDAS ADDENDUM III
2111          KM   FOR BASIN #: 18 & 26
2112          KM        MAXIMUM VOLUME DIVERSION = 16.5 acre-feet
2113          DT   BS480    16.5
2114          DI       0   10000
2115          DQ       0   10000
              * DDM   ***** Preserved *****
```



```
LINE          ID.......1.......2.......3.......4.......5.......6.......7.......8.......9......10

2116          KK   RT480
2117          KM   RETRIEVE FLOW FROM DIVERSION INTO ONLINE BASIN
2118          DR   BS480
              * DDM   ***** Preserved *****

2119          KK    S480
2120          KM   RETRIEVE FLOW INTO FICTICIOUS BASIN AND BLEED OFF WITHIN 36 HOURS.
2121          KM    16.5 ACRE-FEETx43560/36x3600=5.5cfs
2122          RS       1    STOR       0
2123          SV       0     .01    16.5    30.0
2124          SQ       0     3.0     5.6    50.0
              * DDM   ***** Preserved *****

2125          KK    C480
2126          KM   HYDROGRAPH COMBINATION FOR SPOOK HILL FRS
2127          HC       2
              * DDM   ***** Preserved *****

2128          KK   CC480
2129          KM   HYDROGRAPH COMBINATION AT SUBBASIN 480
2130          HC       2   0.731
              * DDM   ***** Preserved *****

2131          KK    R480
2132          KM   ROUTE FLOW FROM SUB-BASIN 480 TO SUBBASIN 462
2133          RS       7    FLOW      -1
2134          RC    .035    .025    .035    2800   .0002
2135          RX       0       1       2      28      58      84      85      86
2136          RY    13.5    13.5    13.5       0       0    13.5    13.5    13.5
              * DDM   ***** Updated *****

2137          KK     456
2138          KM   SUB-BASIN 456
2139          KM   24-HOUR SCS TYPE II RAINFALL WAS USED TO FIND TC & R FOR THIS BASIN
2140          KM   THIS BASIN USED RAINFALL REDUCTION FACTOR OF  .998
2141          KM     L =  .94  Kb = .045  Adj. Slope =  315.0
2142          BA    .260
2143          LG    .300    .380   5.600    .200  12.000
2144          UC    .217    .139
2145          UA       0       5      16      30      65      77      84      90      94      97
2146          UA     100
              * DDM   ***** Preserved *****

2147          KK      D1
2148          KM        DIVERT FLOW INTO OFFLINE DETENTION BASIN
2149          KM        WEIR FOR BASIN SET AT 4 FEET ABOVE CHANNEL BOTTOM
2150          DT  BASIN1     4.0
2151          DI       0    11.1   127.9   234.4   577.7   789.9  1025.5  1280.9  1555.7
2152          DQ       0       0       0    47.7     248   381.8   533.6   701.5     884
              * DDM   ***** Preserved *****
```

```
LINE          ID.......1.......2.......3.......4.......5.......6.......7.......8.......9......10

2153          KK     CD2
2154          KM        SPLIT OUT FLOW FOR WASHES THAT FLOW TO THE SOUTH FROM
2155          KM        WASHES THAT DRAIN TO THE WES, SOUTHERN WASHES FED BY 30" & 24" PIPE
2156          DT    WA30
2157          DI       0    11.1   127.9   189.6   329.7     408   491.9   579.4   671.7
2158          DQ       0    11.1    38.4    48.2      63    69.5      76      81      86
              * DDM   ***** Preserved *****

2159          KK    R456
2160          KM        ROUTE FLOW FROM SUB-BASIN 51 TO C101
2161          RS       2    FLOW      -1
2162          RC     .05    .035     .05    3800    .044
2163          RX    1000    1010    1020    1036    1041    1057    1067    1077
2164          RY   14.88   14.44      14      10      10      14   14.44   14.88
              * DDM   ***** Updated *****

2165          KK     457
2166          KM   SUB-BASIN 457
2167          KM   24-HOUR SCS TYPE II RAINFALL WAS USED TO FIND TC & R FOR THIS BASIN
2168          KM   THIS BASIN USED RAINFALL REDUCTION FACTOR OF  .999
2169          KM     L = 1.01  Kb = .045  Adj. Slope =  308.8
2170          BA    .190
2171          LG    .270    .330   3.950    .460   6.000
2172          UC    .237    .195
2173          UA       0       5      16      30      65      77      84      90      94      97
2174          UA     100
              * DDM   ***** Preserved *****

2175          KK    C101
2176          KM        COMBINE HYDROGRAPHS FROM SUB-BASINS 50 AND 51
2177          HC       2
              * DDM   ***** Preserved *****

2178          KK      D3
2179          KM        RESERVOIR AT THE EDGE OF THE PROPERTY   FLOW FROM CHANNEL
2180          KM        DIVERTED  INTO OFFLINE BASIN A 25' WEIR SET AT ELEVATION 1808 FT
2181          DT  BASIN2     5.0
2182          DI       0      36      70     110     180   313.5     402   500.9
2183          DQ       0       0       0       0       0    67.5     124   190.9
              * DDM   ***** Preserved *****

2184          KK    RTD3
2185          KM   RETRIEVE FLOW FROM DIVERSION INTO OFFLINE BASIN
2186          DR  BASIN2
              * DDM   ***** Preserved *****

2187          KK     SD3
2188          KM   RETRIEVE FLOW INTO FICTICIOUS BASIN AND BLEED OFF WITHIN 36 HOURS.
2189          KM     5.0 ACRE-FEETx43560/36x3600=1.7cfs
2190          RS       1    STOR       0
2191          SV       0     .01       5
2192          SQ       0     0.7     1.7
              * DDM   ***** Preserved *****
```



```
LINE          ID.......1.......2.......3.......4.......5.......6.......7.......8.......9......10

2193          KK     CD3
2194          KM   HYDROGRAPH COMBINATION FOR OFFLINE BASIN BLEEDOFF
2195          HC       2
              * DDM   ***** Preserved *****

2196          KK    R101
2197          KM        ROUTE FLOW FROM SUBBASIN C101 TO C103
2198          RS       1    FLOW      -1
2199          RC     .05    .035     .05    1450     .05
2200          RX    1000    1010    1020    1036    1041    1057    1067    1077
2201          RY      15    14.5      14      10      10      14    14.5      15
              * DDM   ***** Updated *****

2202          KK     458
2203          KM   SUB-BASIN 458
2204          KM   24-HOUR SCS TYPE II RAINFALL WAS USED TO FIND TC & R FOR THIS BASIN
2205          KM   THIS BASIN USED RAINFALL REDUCTION FACTOR OF  .999
2206          KM     L =  .76  Kb = .048  Adj. Slope =  299.0
2207          BA    .190
2208          LG    .290    .330   5.800    .190   6.000
2209          UC    .204    .131
2210          UA       0       5      16      30      65      77      84      90      94      97
2211          UA     100
              * DDM   ***** Preserved *****

2212          KK    C103
2213          KM        COMBINE HYDROGRAPHS FROM SUB-BASIN 55 AND C101
2214          HC       2
```

```
                 * DDM    ***** Preserved *****

2215             KK     R103
2216             KM         ROUTE FLOW FROM SUBBASIN C103 TO C106
2217             RS       1     FLOW      -1
2218             RC     .05     .035     .05     900     .03
2219             RX    1000     1010    1020    1030    1050    1060    1070    1080
2220             RY   13.16    12.83    12.5      10      10    12.5   12.83   13.16
                 * DDM    ***** Preserved *****

2221             KK     RT30
2222             KM         RETRIEVE DIVERTED FLOW FOR WASH BELOW 30 INCH PIPE
2223             DR     WA30
                 * DDM    ***** Preserved *****

2224             KK      R30
2225             KM         ROUTE FLOW FROM WASH DIVERSION TO COMBINE C52
2226             RS       1     FLOW      -1
2227             RC     .05     .035     .05    1630     .05
2228             RX    1000     1010    1020    1036    1041    1057    1067    1077
2229             RY      15     14.5      14      10      10      14    14.5      15
                 * DDM    ***** Preserved *****
1                                          HEC-1 INPUT                                                    PAGE 58

LINE             ID.......1.......2.......3.......4.......5.......6.......7.......8.......9......10

2230             KK     RTB1
2231             KM         RETRIEVE DIVERTED FLOW FROM BASIN 1
2232             DR   BASIN1
                 * DDM    ***** Preserved *****

2233             KK       B1
2234             KM         ROUTE FLOW THROUGH OFFLINE DETENTION BASIN
2235             KM         FLOW OUTLETS THROUGH A 30 INCH OUTLET PIPE
2236             RS       1     ELEV       0
2237             SV              .7      1.4     2.3     2.7     4.0
2238             SQ       0       5       16      28    32.5      37
2239             SE       0       1        2       3     3.5       4
                 * DDM    ***** Preserved *****

2240             KK      RB1
2241             KM         ROUTE FLOW FROM BASIN DIVERSION TO COMBINE C52
2242             RS       3     FLOW      -1
2243             RC     .05     .035     .05    1720     .05
2244             RX    1000     1010    1020    1036    1041    1057    1067    1077
2245             RY      15     14.5      14      10      10      14    14.5      15
                 * DDM    ***** Preserved *****

2246             KK     CDIV
2247             KM         COMBINE FLOWS FROM WA30 AND BASIN 1
2248             HC       2      .12
                 * DDM    ***** Updated *****

2249             KK      459
2250             KM    SUB-BASIN 459
2251             KM    24-HOUR SCS TYPE II RAINFALL WAS USED TO FIND TC & R FOR THIS BASIN
2252             KM    THIS BASIN USED RAINFALL REDUCTION FACTOR OF 1.000
2253             KM      L =  .35  Kb = .052  Adj. Slope =  251.6
2254             BA    .030
2255             LG    .220     .300   3.330    .710   8.000
2256             UC    .162     .157
2257             UA       0       5      16      30      65      77      84      90      94      97
2258             UA     100
                 * DDM    ***** Preserved *****

2259             KK      C52
2260             KM         COMBINE FLOWS FROM SUB-BASIN 52 WA30 AND BASIN 1
2261             HC       2
                 * DDM    ***** Preserved *****

2262             KK      R52
2263             KM         ROUTE FLOW FROM SUBBASIN 52 TO C102
2264             RS       3     FLOW      -1
2265             RC     .05     .035     .05    2000     .05
2266             RX    1000     1010    1020    1036    1041    1057    1067    1077
2267             RY      15     14.5      14      10      10      14    14.5      15
                 * DDM    ***** Updated *****
1                                          HEC-1 INPUT                                                    PAGE 59

LINE             ID.......1.......2.......3.......4.......5.......6.......7.......8.......9......10

2268             KK      460
2269             KM    SUB-BASIN 460
2270             KM    24-HOUR SCS TYPE II RAINFALL WAS USED TO FIND TC & R FOR THIS BASIN
2271             KM    THIS BASIN USED RAINFALL REDUCTION FACTOR OF  .999
2272             KM      L =  .62  Kb = .058  Adj. Slope =  194.0
2273             BA    .140
2274             LG    .250     .260   3.740    .690  27.000
```

```
2275          UC     .242     .160
2276          UA        0        5       16       30       65       77       84       90       94       97
2277          UA      100
              * DDM    ***** Preserved *****

2278          KK     C102
2279          KM         COMBINE HYDROGRAPHS FROM SUB-BASINS 52 AND 53
2280          HC        2
              * DDM    ***** Preserved *****

2281          KK   BASIN3
2282          KM         RESERVOIR AT CLUBHOUSE LOCATION 1-30 INCH PIPE AT OUTFALL
2283          KM         BOTTOM OF BASIN AT 6 FEET ABOVE 1795 ELEVATION
2284          RS        1     ELEV        0
2285          SA        0        0        0        0      .34     1.59     1.81     1.96     2.13      2.3
2286          SQ        0       22       45     47.4       48       51       57       62       67       73
2287          SE     1795   1797.5     1800   1800.4   1800.5     1801     1802     1803     1804   1805.5
              * DDM    ***** Preserved *****

2288          KK       R3
2289          KM         ROUTE FLOW FROM C102 to C106
2290          RS        5     FLOW       -1
2291          RC      .05      .03      .05     2750    .0375
2292          RX     1000     1010     1020     1052     1086     1118     1128     1138
2293          RY     19.2     18.4       18       10       10       18     18.4     19.2
              * DDM    ***** Updated *****

2294          KK      461
2295          KM    SUB-BASIN 461
2296          KM    24-HOUR SCS TYPE II RAINFALL WAS USED TO FIND TC & R FOR THIS BASIN
2297          KM    THIS BASIN USED RAINFALL REDUCTION FACTOR OF  .999
2298          KM      L =  .83  Kb = .052  Adj. Slope =  181.0
2299          BA     .120
2300          LG     .270     .250    4.250     .450   21.000
2301          UC     .271     .250
2302          UA        0        5       16       30       65       77       84       90       94       97
2303          UA      100
              * DDM    ***** Preserved *****

2304          KK     C104
2305          KM         COMBINE HYDROGRAPHS FROM SUB-BASIN 54 AND R102
2306          HC        2
              * DDM    ***** Preserved *****
```



```
LINE          ID.......1.......2.......3.......4.......5.......6.......7.......8.......9......10

2307          KK     C106
2308          KM         COMBINE HYDROGRAPHS FROM SUB-BASIN C103 AND C104
2309          HC        2
              * DDM    ***** Preserved *****

2310          KK     R106
2311          KM         ROUTE FLOW FROM C106 TO C49
2312          RS        2     FLOW       -1
2313          RC      .05     .035      .05     3950     .033
2314          RX     1000     1010     1020     1030     1050     1060     1070     1080
2315          RY    13.16    12.83     12.5       10       10     12.5    12.83    13.16
              * DDM    ***** Updated *****

2316          KK      462
2317          KM    SUB-BASIN 462
2318          KM    24-HOUR SCS TYPE II RAINFALL WAS USED TO FIND TC & R FOR THIS BASIN
2319          KM    THIS BASIN USED RAINFALL REDUCTION FACTOR OF  .998
2320          KM      L =  .97  Kb = .045  Adj. Slope =  297.7
2321          BA     .301
2322          LG     .300     .330    5.300     .240   12.000
2323          UC     .225     .137
2324          UA        0        5       16       30       65       77       84       90       94       97
2325          UA      100
              * DDM    ***** Preserved *****

2326          KK      C56
2327          KM         COMBINE HYDROGRAPHS FROM SUB-BASIN 56 AND C106
2328          HC        2
              * DDM    ***** Preserved *****

2329          KK     C462
2330          KM         COMBINE HYDROGRAPHS AT SUBBASIN 462
2331          HC        2    2.09
              * DDM    ***** Preserved *****

2332          KK     R462
2333          KM    ROUTE FLOW FROM SUB-BASIN 462 TO SUB-BASIN 500 (First Channel Reach)
2334          RS        1     FLOW       -1
2335          RC     .025     .025     .025     1800     .005
2336          RX        0        1       20       32       62       74       93       94
2337          RY       13       12       12        0        0       12       12       13
              *
```

```
                    * DDM    ***** Preserved *****

2338                KK    RR462
2339                KM    ROUTE FLOW FROM SUB-BASIN 462 TO SUB-BASIN 500 (Second Natural Wash Reach)
2340                RS        3     FLOW       -1
2341                RC     .055      .05     .055     4700      .05
2342                RX        0        1        2       28       58       84       85       86
2343                RY     13.5     13.5     13.5        0        0     13.5     13.5     13.5
                    * DDM    ***** Updated *****
1                                                HEC-1 INPUT                                          PAGE 61

LINE                ID.......1.......2.......3.......4.......5.......6.......7.......8.......9......10


2344                KK      500
2345                KM    SUB-BASIN 500
2346                KM    24-HOUR SCS TYPE II RAINFALL WAS USED TO FIND TC & R FOR THIS BASIN
2347                KM    THIS BASIN USED RAINFALL REDUCTION FACTOR OF  .994
2348                KM      L = 2.77  Kb = .042  Adj. Slope =  286.8
2349                BA     .930
2350                LG     .350     .400    6.000     .170    9.000
2351                UC     .421     .333
2352                UA        0        3        5        8       12       20       43       75       90       96
2353                UA      100
                    * DDM    ***** Preserved *****

2354                KK     C500
2355                KM    HYDROGRAPH COMBINATION FOR THE ENTIRE WATERSHED AT THE SALT RIVER
2356                HC        2     3.02
2357                ZZ
1
          SCHEMATIC DIAGRAM OF STREAM NETWORK
 INPUT
  LINE      (V) ROUTING          (--->) DIVERSION OR PUMP FLOW

   NO.      (.) CONNECTOR        (<---) RETURN OF DIVERTED OR PUMPED FLOW

   34          10
                V
                V
   44         R10
                V
                V
   50         R12
                .
                .
   56           .          20
                .           .
                .           .
   69           .           .-------->    BS20
   66           .         D20
                .           .
                .           .
   74           .           .           .<--------    BS20
   72           .           .        RT20
                .           .           V
                .           .           V
   75           .           .         S20
                .           .           .
                .           .           .
   81         C20.......................
                V
                V
   84         R20
                .
                .
   90           .          40
                .           .
                .           .
  103           .           .-------->    BS40
  100           .         D40
                .           .
                .           .
  108           .           .           .<--------    BS40
  106           .           .        RT40
                .           .           V
                .           .           V
  109           .           .         S40
                .           .           .
                .           .           .
    5         C40.......................
                .
                .
  118           .          60
                .           .
                .           .
  131           .           .-------->    BS60
  128           .         D60
                .           .
                .           .
```

```
136          .            .            .<-------    BS60
134          .            .        RT60
             .            .           V
             .            .           V
137          .            .        SB60
             .            .           .
             .            .           .
143        C60.......................
             V
             V
146        S60
             V
             V
158        R60
             V
             V
164       RR60
             .
             .
170          .          80
             .            .
             .            .
183          .            .------->    BS80
180          .         D80
             .            .
             .            .
188          .            .            .<-------    BS80
186          .            .        RT80
             .            .           V
             .            .           V
189          .            .         S80
             .            .           .
             .            .           .
195          .         C80............
             .            .
             .            .
198       CC80............
             V
             V
201        R80
             .
             .
 7           .         100
             .            .
             .            .
220          .            .------->   BS100
217          .        D100
             .            .
             .            .
225          .            .            .<-------   BS100
223          .            .       RT100
             .            .           V
             .            .           V
226          .            .        S100
             .            .           .
             .            .           .
232       C100.......................
             V
             V
235       R100
             .
             .
241          .         120
             .            .
             .            .
254          .            .------->   BS120
251          .        D120
             .            .
             .            .
259          .            .            .<-------   BS120
257          .            .       RT120
             .            .           V
             .            .           V
260          .            .        S120
             .            .           .
             .            .           .
266       C120.......................
             V
             V
269       R120
             .
             .
275          .         140
             .            .
             .            .
288          .            .------->   BS140
285          .        D140
             .            .
             .            .
293          .            .            .<-------   BS140
```

```
291          .           .       RT140
             .           .           V
             .           .           V
             .           .        S140
             .           .           .
             .           .           .
300       C140.......................
             .
             .
303          .         150
             .           V
             .           V
313          .        R150
             .           V
             .           V
319          .        R152
             .           .
             .           .
325          .           .         160
             .           .           .
             .           .           .
338          .           .           .-------->   BS160
335          .           .        D160
             .           .           .
             .           .           .
343          .           .           .           .<-------   BS160
341          .           .           .       RT160
             .           .           .           V
             .           .           .           V
344          .           .           .        S160
             .           .           .           .
             .           .           .           .
350          .        C160.......................
             .           .
             .           .
353          .           .         180
             .           .           .
             .           .           .
363       C180.......................
             .
             .
             .         210
             .           V
             .           V
376          .        R210
             .           .
             .           .
382          .           .         240
             .           .           .
             .           .           .
392          .        C240............
             .           V
             .           V
395          .        S240
             .           V
             .           V
402          .        R240
             .           .
             .           .
409          .           .         220
             .           .           .
             .           .           .
419          .        C220............
             .           V
             .           V
422          .       SW220
             .           V
             .           V
429          .        R220
             .           .
             .           .
436          .           .         190
             .           .           V
             .           .           V
446          .           .        R190
             .           .           V
             .           .           V
452          .           .        R192
             .           .           .
             .           .           .
             .           .           .         200
             .           .           .           .
             .           .           .           .
468          .        C200.......................
             .           V
             .           V
471          .       SW200
             .           V
             .           V
478          .        R200
```

```
              .           V
              .           V
[illegible]4  .       SS200
              .           V
              .           V
491           .       RR200
              .           .
              .           .
497       CC180............
              V
              V
500        S180
              V
              V
512        R180
              .
              .
521           .         260
              .           .
              .           .
531        C260............
              V
              V
534        R260
              .
              .
543           .         280
              .           .
              .           .
553        C280............
              V
              V
556        R280
              .
              .
565           .         300
              .           .
              .           .
575        C300............
              V
              V
[illegible]3  R300
              .
              .
587           .        305A
              .           .
              .           .
597        C305............
              V
              V
600        R305
              .
              .
608           .       320B1
              .           .
              .           .
623           .           .-------> B320B1
618           .      D320B1
              .           .
              .           .
628           .           .           .<-------  B320B1
626           .           .      T320B1
              .           .           V
              .           .           V
629           .           .      S320B1
              .           .           .
              .           .           .
635      C320B1........................
              .
              .
638           .         350
              .           .
              .           .
651           .           .------->   SF350
648           .        D350
              .           V
              .           V
654           .        R350
              .           .
              .           .
[illegible]1  .           .         310
              .           .           .
              .           .           .
671           .        C310............
              .           V
              .           V
674           .        R310
              .           .
              .           .
681           .           .        305B
```

```
                 .          .          V
                 .          .          V
                 .          .       R305B
                 .          .          .
                 .          .          .
698              .          .          .       320B2
                 .          .          .          .
                 .          .          .          .
713              .          .          .          .-------> B320B2
708              .          .          .      D320B2
                 .          .          .          .
                 .          .          .          .
718              .          .          .          .          .<-------  B320B2
716              .          .          .          .     T320B2
                 .          .          .          .          V
                 .          .          .          .          V
719              .          .          .          .     S320B2
                 .          .          .          .          .
                 .          .          .          .          .
725              .     C320B2.................................
                 .          V
                 .          V
728              .     R320B2
                 .          .
                 .          .
735              .          .        340B
                 .          .          .
                 .          .          .
750              .          .          .-------> BS340B
745              .          .       D340B
                 .          .          .
                 .          .          .
755              .          .          .          .<-------  BS340B
753              .          .          .      RT340B
                 .          .          .          V
                 .          .          .          V
756              .          .          .       S340B
                 .          .          .          .
                 .          .          .          .
762              .      C340B......................
                 .          .
                 .          .
                 .          .------->   BS340
765              .     DD340B
                 .          .
                 .          .
772              .          .          .<-------   BS340
770              .          .       RT340
                 .          .          V
                 .          .          V
773              .          .      SS340B
                 .          .          .
                 .          .          .
779              .     CD340B............
                 .          .
                 .          .
784              .          .          .<-------   SF350
782              .          .       RT350
                 .          .          V
                 .          .          V
785              .          .       RR350
                 .          .          .
                 .          .          .
792              .          .          .         355
                 .          .          .          .
                 .          .          .          .
802              .          .        C355............
                 .          .          .
                 .          .          .
808              .          .          .------->   BS355
805              .          .        D355
                 .          .          .
                 .          .          .
813              .          .          .          .<-------   BS355
811              .          .          .       RT355
                 .          .          .          V
                 .          .          .          V
814              .          .          .        S355
                 .          .          .          .
                 .          .          .          .
                 .          .       CC355............
                 .          .          V
                 .          .          V
823              .          .        R355
                 .          .          .
                 .          .          .
830              .     CC340B............
                 .          V
                 .          V
833              .      R340B
```

```
                .           .
                .           .
                .           .        340A2
                .           .           .
                .           .           .
853             .           .           .-------->  B340A2
850             .           .       D340A2
                .           .           .
                .           .           .
858             .           .           .           .<-------  B340A2
856             .           .           .      T340A2
                .           .           .           V
                .           .           .           V
859             .           .           .      S340A2
                .           .           .           .
                .           .           .           .
865             .       C340A2.......................
                .           V
                .           V
868             .       R340A2
                .           .
                .           .
875        CC320B............
                V
                V
878         R320B
                .
                .
887             .        320A
                .           .
                .           .
902             .           .-------->  BS320A
897             .       D320A
                .           .
                .           .
907             .           .           .<-------  BS320A
905             .           .       RT320A
                .           .           V
                .           .           V
908             .           .        S320A
                .           .           .
                .           .           .
1          C320........................
                .
                .
917             .       340A1
                .           .
                .           .
932             .           .-------->  B340A1
927             .       D340A1
                .           .
                .           .
937             .           .           .<-------  B340A1
935             .           .       T340A1
                .           .           V
                .           .           V
938             .           .       S340A1
                .           .           .
                .           .           .
944             .       C340A1............
                .           .
                .           .
947        C340............
                .
                .
950             .         360
                .           .
                .           .
964             .           .-------->   BS360
960             .        D360
                .           .
                .           .
969             .           .           .<--------   BS360
967             .           .        RT360
                .           .           V
                .           .           V
970             .           .         S360
                .           .           .
                .           .           .
76         C360........................
                .
                .
979             .        380A
                .           .
                .           .
989        C380A............
                .
                .
992             .        400A
                .           .
```

```
1002        C400A............
                 .
                 .
1005             .         370
                 .           V
                 .           V
1015             .        S370
                 .           .
                 .           .
1027             .           .-------->   B370W
1025             .         D370
                 .           V
                 .           V
1030             .       R370S
                 .           .
                 .           .
1037             .           .       380B1
                 .           .           .
                 .           .           .
1051             .           .           .-------->  B380B1
1047             .           .      D380B1
                 .           .           .
                 .           .           .
1056             .           .           .           .<--------  B380B1
1054             .           .           .      T380B1
                 .           .           .           V
                 .           .           .           V
1057             .           .           .      S380B1
                 .           .           .           .
                 .           .           .           .
1063             .      C380B1........................
                 .           V
                 .           V
1066             .      R380B1
                 .           .
                 .           .
1073             .           .       400B1
                 .           .           .
                 .           .           .
1087             .           .           .-------->  B400B1
1088             .           .      D400B1
                 .           .           .
                 .           .           .
1092             .           .           .           .<--------  B400B1
1090             .           .           .      T400B1
                 .           .           .           V
                 .           .           .           V
1093             .           .           .      S400B1
                 .           .           .           .
                 .           .           .           .
1099             .           .      C400B1............
                 .           .           .
                 .           .           .
1102        CC400B........................
                 .
                 .
1105             .       420A2
                 .           .
                 .           .
1115        C400A2............
                 .
                 .
1120             .           .<--------   B370W
1118             .       T370W
                 .           V
                 .           V
1121             .       R370W
                 .           .
                 .           .
1127             .           .        395A
                 .           .           V
                 .           .           V
1137             .           .      R390C1
                 .           .           .
                 .           .           .
1145             .           .           .        395B
                 .           .           .           V
                 .           .           .           V
1155             .           .           .      R390C2
                 .           .           .           .
                 .           .           .           .
1163             .           .           .           .        390C
                 .           .           .           .           .
                 .           .           .           .           .
1173             .           .      CP390C........................
                 .           .           .
                 .           .           .
1180             .           .           .-------->  TO390B
1177             .           .       TOC-H
```

```
                 .           .
                 .           .
                 .     C370.....
                 .        V
                 .        V
1187             .     R390S
                 .        .
                 .        .
1193             .        .     400B3
                 .        .        .
                 .        .        .
1207             .        .        .-------> B400B3
1203             .        .   D400B3
                 .        .        .
                 .        .        .
1212             .        .        .        .<------- B400B3
1210             .        .        .   T400B3
                 .        .        .        V
                 .        .        .        V
1213             .        .        .   S400B3
                 .        .        .        .
                 .        .        .        .
1219             .        .   C400B3.....
                 .        .        .
                 .        .        .
1222             .     C390S.....
                 .        .
                 .        .
1225             .        .     380B3
                 .        .        .
                 .        .        .
1238             .        .        .-------> B380B3
1235             .        .   D380B3
                 .        .        .
                 .        .        .
1243             .        .        .        .<------- B380B3
1241             .        .        .   T380B3
                 .        .        .        V
                 .        .        .        V
1244             .        .        .   S380B3
                 .        .        .        .
                 .        .        .        .
                 .        .   C380B3.....
                 .        .        .
                 .        .        .
1256             .        .        .-------> 380B3c
1253             .        .   D380B3
                 .        .        .
                 .        .        .
1262             .        .        .-------> 380B3a
1259             .        .   380B3b
                 .        .        .
                 .        .        .
1265             .  C380BB.....
                 .        .
                 .        .
1271             .        .-------> B38B3b
1268             .     D380B
                 .        .
                 .        .
1276             .        .        .<------- B38B3b
1274             .        .   RT380B
                 .        .        V
                 .        .        V
1277             .        .     S380B
                 .        .        .
                 .        .        .
1283             .  CC380B.....
                 .        V
                 .        V
1286             .  R38B3b
                 .        .
                 .        .
1294             .        .        .<------- 380B3a
1292             .        .   T38B3a
                 .        .        V
                 .        .        V
1295             .        .   R38B3a
                 .        .        .
                 .        .        .
                 .        .        .        .<------- 380B3c
                 .        .        .   T38B3c
                 .        .        .        .
                 .        .        .        .
1304             .  C38B3c.....
                 .        V
                 .        V
1307             .  R380B3
                 .        .
                 .        .
```

```
1313          .           .       380B2
              .           .           .
              .           .           .
              .      C380B2............
              .           V
              .           V
1326          .      R380B2
              .           .
              .           .
1333          .           .       400B2
              .           .           .
              .           .           .
1343          .      C400B2............
              .           V
              .           V
1346          .      R400B2
              .           .
              .           .
1353          .           .       420A1
              .           .           .
              .           .           .
1367          .           .           .-------> B420A1
1363          .           .      D420A1
              .           .           .
              .           .           .
1372          .           .           .           .<-------  B420A1
1370          .           .           .      T420A1
              .           .           .           V
              .           .           .           V
1373          .           .           .      S420A1
              .           .           .           .
              .           .           .           .
1379       C420A.................................
              .
              .
1385          .           .<-------  TO390B
1382          .       R390B
              .           V
              .           V
1386          .      R390B1
              .           .
              .           .
              .           .        385C
              .           .           .
              .           .           .
1402          .           .           .        385B
              .           .           .           .
              .           .           .           .
1412          .           .           .           .        385A
              .           .           .           .           .
              .           .           .           .           .
1422          .           .           .           .           .        415B
              .           .           .           .           .           .
              .           .           .           .           .           .
1432          .           .      CP415B...................................
              .           .           .
              .           .           .
1439          .           .           .-------> BS415B
1436          .           .       D415B
              .           .           .
              .           .           .
1444          .           .           .           .<-------  BS415B
1442          .           .           .      RT415B
              .           .           .           V
              .           .           .           V
1445          .           .           .       S415B
              .           .           .           .
              .           .           .           .
1451          .           .      CC415B............
              .           .           V
              .           .           V
1454          .           .      R390A1
              .           .           .
              .           .           .
1461          .           .           .        390A
              .           .           .           .
              .           .           .           .
1471          .           .      CP390A............
              .           .           V
              .           .           V
              .           .      R390B2
              .           .           .
              .           .           .
1483          .           .           .        390B
              .           .           .           .
              .           .           .           .
1493          .      CP390B........................
              .           V
              .           V
1497          .       S390B
```

```
                .          .
                .          .
[illegible]5    .          .      420B05
                .          .          .
                .          .          .
1516            .     CPSD05...........
                .          .
                .          .
1520            .          .      420B10
                .          .          .
                .          .          .
1530            .     CPSD10...........
                .          .
                .          .
1534            .          .      420B15
                .          .          .
                .          .          .
1544            .     CPSD15...........
                .          .
                .          .
1548            .          .      420B20
                .          .          .
                .          .          .
1558            .     CPSD20...........
                .          .
                .          .
1562            .          .      420B25
                .          .           V
                .          .           V
1572            .          .      SFIRES
                .          .          .
                .          .          .
1580            .     CPSD25...........
                .          .
                .          .
1584            .          .      420B30
                .          .          .
                .          .          .
1594            .     CPSD30...........
                .          .
                .          .
[illegible]9    .          .      420B35
                .          .           V
                .          .           V
1608            .          .      SCHRCH
                .          .          .
                .          .          .
1617            .     CPSD35...........
                .          .
                .          .
1621            .          .      420B40
                .          .          .
                .          .          .
1631            .     CPSD40...........
                .          .
                .          .
1635            .          .      420B45
                .          .          .
                .          .          .
1645            .     CPSD45...........
                .          .
                .          .
1654            .          .-------->    MCDB
1649            .     TOLSCH
                .          .
                .          .
1657            .          .         440
                .          .           V
                .          .           V
1667            .          .         R70
                .          .          .
                .          .          .
1673            .          .          .         441
                .          .          .           .
                .          .          .           .
1683            .          .        C108...........
                .          .          .
                .          .          .
[illegible]688  .          .          .-------->   SPLIT
[illegible]36   .          .          D4
                .          .           V
                .          .           V
1691            .          .        R108
                .          .          .
                .          .          .
1697            .          .          .         442
                .          .          .           .
                .          .          .           .
1707            .          .         C67...........
                .          .          .
```

```
1713                    .-------> BASIN4
1710                 D6
                        .
                        .
1718                    .<-------  BASIN4
1716                 RTD6
                        V
                        V
1719                 SD6
                        .
                        .
1725              CD6...........
                        .
                        .
1728                 443
                        .
                        .
1741                    .------->  WSH66
1738                 D66
                        V
                        V
1744              R113
                        .
                        .
1750            C114...........
                        .
                        .
1753                 444
                        V
                        V
1763                 R58
                        .
                        .
1769                    .         445
                        .           .
                        .           .
1779              C107...........
                        V
                        V
1782              R107
                        .
                        .
1790                    .           .<-------   SPLIT
1788                    .        RTB2
                        .           V
                        .           V
1791                    .      RSPLIT
                        .           .
                        .           .
1797                    .           .         446
                        .           .           .
                        .           .           .
1807              C109........................
                        .
                        .
1813                    .-------> WSH404
1810                 D5
                        V
                        V
1816              R109
                        .
                        .
1822                    .         447
                        .           .
                        .           .
1834                    .           .           .<-------  WSH404
1832                    .           .       RT404
                        .           .           V
                        .           .           V
1835                    .           .        R404
                        .           .           .
                        .           .           .
1841              C110........................
                        V
                        V
1844              R110
                        .
                        .
1850            C115...........
                     V
                     V
1853            R115
                        .
                        .
1859                 448
                        .
                        .
1869                    .         449
                        .           .
```

```
1879                    C6364............
                           V
                           V
1882                    R6364
                           .
                           .
1888                       .          450
                           .            .
                           .            .
1898                       .            .          451
                           .            .            .
                           .            .            .
1908                       .        C451............
                           .            .
                           .            .
1913                       .            .            .<-------   WSH66
1911                       .            .        RT66
                           .            .            .
                           .            .            .
1914                       .            .            .          452
                           .            .            .            .
                           .            .            .            .
1924                       .            .       C6465............
                           .            .           V
                           .            .           V
1927                       .            .       R6566
                           .            .            .
                           .            .            .
1933                    C116........................
                           V
                           V
1936                   BASIN5
                           V
                           V
1943                    R116
                           .
                           .
1949                       .          453
                           .            .
                           .            .
9                       C117............
                           .
                           .
1962                 C118............
                        V
                        V
1965                 R118
                        .
                        .
1974                    .-------> BASIN6
1971                 D7
                        .
                        .
1979                    .           .<-------  BASIN6
1977                    .        RTD7
                        .           V
                        .           V
1980                    .         SD7
                        .           .
                        .           .
1986                 CD7............
                        .
                        .
1989                    .         454
                        .           .
                        .           .
1999                 C454............
                        V
                        V
2002                 R454
                        .
                        .
2009                    .        415A
                        .           .
                        .           .
2019           CP415A........................
                     .
                     .
28                   .           .<-------    MCDB
4                    .       RMCDB
                     .          V
                     .          V
2029                 .       SMCDB
                     .          .
                     .          .
2039           CPLSCH............
                     V
                     V
2043            R415A
```

```
                .           .
                .           .
                .           .         455
                .           .           .
                .           .           .
 2065           .           .           .-------->   BS455
 2060           .           .        D455
                .           .           .
                .           .           .
 2070           .           .           .           .<-------   BS455
 2068           .           .           .       RT455
                .           .           .           V
                .           .           .           V
 2071           .           .           .        S455
                .           .           .           .
                .           .           .           .
 2077           .           .        C455............
                .           .           .
                .           .           .
 2080       CC455........................
                V
                V
 2083        S440
                V
                V
 2092        R455
                .
                .
 2098           .         480
                .           .
                .           .
 2113           .           .-------->   BS480
 2108           .        D480
                .           .
                .           .
 2118           .           .           .<-------   BS480
 2116           .           .       RT480
                .           .           V
                .           .           V
 2119           .           .        S480
                .           .           .
                .           .           .
 5              .        C480............
                .           .
                .           .
 2128       CC480............
                V
                V
 2131        R480
                .
                .
 2137           .         456
                .           .
                .           .
 2150           .           .-------->  BASIN1
 2147           .          D1
                .           .
                .           .
 2156           .           .-------->    WA30
 2153           .         CD2
                .           V
                .           V
 2159           .        R456
                .           .
                .           .
 2165           .           .         457
                .           .           .
                .           .           .
 2175           .        C101............
                .           .
                .           .
 2181           .           .-------->  BASIN2
 2178           .          D3
                .           .
                .           .
 2186           .           .           .<-------  BASIN2
 2184           .           .        RTD3
                .           .           V
                .           .           V
 27             .           .         SD3
                .           .           .
                .           .           .
 2193           .         CD3............
                .           V
                .           V
 2196           .        R101
                .           .
                .           .
 2202           .           .         458
                .           .           .
```

```
2212            .        C103............
                .           V
                .           V
2215            .        R103
                .           .
                .           .
2223            .           .           .<-------    WA30
2221            .           .        RT30
                .           .           V
                .           .           V
2224            .           .         R30
                .           .           .
                .           .           .
2232            .           .           .           .<-------  BASIN1
2230            .           .           .        RTB1
                .           .           .           V
                .           .           .           V
2233            .           .           .          B1
                .           .           .           V
                .           .           .           V
2240            .           .           .         RB1
                .           .           .           .
                .           .           .           .
2246            .           .        CDIV............
                .           .           .
                .           .           .
2249            .           .           .         459
                .           .           .           .
                .           .           .           .
2259            .           .         C52............
                .           .           V
                .           .           V
2262            .           .         R52
                .           .           .
                .           .           .
2268            .           .           .         460
                .           .           .           .
                .           .           .           .
2278            .           .        C102............
                .           .           V
                .           .           V
 1              .           .      BASIN3
                .           .           V
                .           .           V
2288            .           .          R3
                .           .           .
                .           .           .
2294            .           .           .         461
                .           .           .           .
                .           .           .           .
2304            .           .        C104............
                .           .           .
                .           .           .
2307            .        C106............
                .           V
                .           V
2310            .        R106
                .           .
                .           .
2316            .           .         462
                .           .           .
                .           .           .
2326            .         C56............
                .           .
                .           .
2329        C462............
               V
               V
2332        R462
               V
               V
2338       RR462
               .
               .
2344            .         500
                .           .
                .           .
2354        C500............
```

) RUNOFF ALSO COMPUTED AT THIS LOCATION

```
1   ************************************
 *                                    *
 *   FLOOD HYDROGRAPH PACKAGE  (HEC-1)*
 *              JUN   1998            *
 *            VERSION 4.1             *
 *                                    *
 *  RUN DATE   10APR06  TIME  14:28:38*
 *                                    *
 **************************************

 ***************************
 *                         *
 *    U.S. ARMY CORPS OF ENG
 *    HYDROLOGIC ENGINEERING
 *          609 SECOND STREE
 *       DAVIS, CALIFORNIA 9
 *           (916) 756-1104
 *                         *
 ***************************
```

```
                    McDowell Road Basin and Storm Drain Design
                    This model assumes that the Oak Street detention basin is installed,
                    and all flows pass through the Thunder Mountain detention basin.

                    The Spook Hill ADMP model was uded as a base for this model
                    Return Period = 100 Years, Rainfall Duration = 24 Hours

                    METHODOLOGY
                    THE US CORPS OF ENGINEERS FLOW HYDROGRAPH PACKAGE HEC-1 DATED JUNE 1998 V4.1
                    SCS TYPE II RAINFALL DISTRIBUTION
                    CLARK UNIT HYDROGRAPH
                    GREEN AND AMPT INFILTRATION EQUATION USED FOR CALCULATING LOSSES
                    NORMAL DEPTH STORAGE CHANNEL ROUTING

15 IO          OUTPUT CONTROL VARIABLES
                     IPRNT          5  PRINT CONTROL
                     IPLOT          0  PLOT CONTROL
                     QSCAL         0.  HYDROGRAPH PLOT SCALE

   IT          HYDROGRAPH TIME DATA
                      NMIN          2  MINUTES IN COMPUTATION INTERVAL
                     IDATE      1   0  STARTING DATE
                     ITIME       0000  STARTING TIME
                        NQ       2000  NUMBER OF HYDROGRAPH ORDINATES
                    NDDATE      3   0  ENDING DATE
                    NDTIME       1838  ENDING TIME
                     ICENT         19  CENTURY MARK

              COMPUTATION INTERVAL     .03 HOURS
                   TOTAL TIME BASE   66.63 HOURS

        ENGLISH UNITS
             DRAINAGE AREA          SQUARE MILES
             PRECIPITATION DEPTH    INCHES
             LENGTH, ELEVATION      FEET
             FLOW                   CUBIC FEET PER SECOND
             STORAGE VOLUME         ACRE-FEET
             SURFACE AREA           ACRES
             TEMPERATURE            DEGREES FAHRENHEIT

17 JD          INDEX STORM NO. 1
                     STRM       3.81  PRECIPITATION DEPTH
                     TRDA        .01  TRANSPOSITION DRAINAGE AREA

18 PI            PRECIPITATION PATTERN
                  .00       .00       .00       .00       .00       .00       .00       .00       .00       .00
                  .00       .00       .00       .00       .00       .00       .00       .00       .00       .00
                  .00       .00       .00       .00       .00       .00       .00       .00       .00       .00
                  .00       .00       .00       .00       .00       .00       .00       .00       .00       .00
                  .00       .00       .00       .00       .00       .00       .00       .00       .00       .00
                  .00       .00       .00       .00       .00       .00       .00       .00       .00       .00
                  .00       .00       .00       .00       .00       .00       .00       .00       .00       .00
                  .00       .00       .00       .00       .00       .00       .00       .00       .00       .00
                  .00       .00       .00       .00       .00       .00       .00       .00       .00       .00
                  .00       .00       .00       .00       .00       .00       .00       .00       .00       .00
                  .00       .00       .00       .00       .00       .00       .00       .00       .00       .00
                  .00       .00       .00       .00       .00       .00       .00       .00       .00       .00
                  .00       .00       .00       .00       .00       .00       .00       .00       .00       .00
                  .00       .00       .00       .00       .00       .00       .00       .00       .00       .00
                  .00       .00       .00       .00       .00       .00       .00       .00       .00       .00
                  .00       .00       .00       .00       .00       .00       .00       .00       .00       .00
                  .00       .00       .00       .00       .00       .00       .00       .00       .00       .00
                  .00       .00       .00       .00       .00       .00       .00       .00       .00       .00
                  .00       .00       .00       .00       .00       .00       .00       .00       .00       .00
                  .00       .00       .00       .00       .00       .00       .00       .00       .00       .00
                  .00       .00       .00       .00       .00       .00       .00       .00       .00       .00
                  .00       .00       .00       .00       .00       .00       .00       .00       .00       .00
                  .00       .00       .00       .00       .00       .00       .00       .00       .00       .00
                  .00       .00       .00       .00       .00       .00       .00       .00       .00       .00
                  .00       .00       .00       .00       .00       .00       .00       .00       .00       .00
                  .00       .00       .00       .00       .00       .00       .00       .00       .00       .00
                  .00       .00       .00       .00       .00       .00       .00       .00       .00       .00
                  .00       .00       .00       .00       .00       .00       .00       .00       .00       .00
                  .00       .00       .00       .00       .00       .00       .00       .00       .00       .00
                  .00       .00       .00       .00       .00       .00       .00       .00       .00       .00
                  .00       .00       .00       .00       .00       .00       .00       .00       .00       .00
                  .00       .00       .00       .00       .00       .01       .01       .01       .01       .01
                  .01       .01       .03       .04       .04       .04       .04       .04       .04       .04
                  .01       .01       .01       .01       .01       .01       .01       .00       .00       .00
                  .00       .00       .00       .00       .00       .00       .00       .00       .00       .00
                  .00       .00       .00       .00       .00       .00       .00       .00       .00       .00
                  .00       .00       .00       .00       .00       .00       .00       .00       .00       .00
```

.00	.00	.00	.00	.00	.00	.00	.00	.00	.00
.00	.00	.00	.00	.00	.00	.00	.00	.00	.00
.00	.00	.00	.00	.00	.00	.00	.00	.00	.00
.00	.00	.00	.00	.00	.00	.00	.00	.00	.00
.00	.00	.00	.00	.00	.00	.00	.00	.00	.00
.00	.00	.00	.00	.00	.00	.00	.00	.00	.00
.00	.00	.00	.00	.00	.00	.00	.00	.00	.00
.00	.00	.00	.00	.00	.00	.00	.00	.00	.00
.00	.00	.00	.00	.00	.00	.00	.00	.00	.00
.00	.00	.00	.00	.00	.00	.00	.00	.00	.00
.00	.00	.00	.00	.00	.00	.00	.00	.00	.00
.00	.00	.00	.00	.00	.00	.00	.00	.00	.00
.00	.00	.00	.00	.00	.00	.00	.00	.00	.00
.00	.00	.00	.00	.00	.00	.00	.00	.00	.00
.00	.00	.00	.00	.00	.00	.00	.00	.00	.00
.00	.00	.00	.00	.00	.00	.00	.00	.00	.00
.00	.00	.00	.00	.00	.00	.00	.00	.00	.00
.00	.00	.00	.00	.00	.00	.00	.00	.00	.00
.00	.00	.00	.00	.00	.00	.00	.00	.00	.00
.00	.00	.00	.00	.00	.00	.00	.00	.00	.00
.00	.00	.00	.00	.00	.00	.00	.00	.00	.00
.00	.00	.00	.00	.00	.00	.00	.00	.00	.00
.00	.00	.00	.00	.00	.00	.00	.00	.00	.00
.00	.00	.00	.00	.00	.00	.00	.00	.00	.00
.00	.00	.00	.00	.00	.00	.00	.00	.00	.00
.00	.00	.00	.00	.00	.00	.00	.00	.00	.00
.00	.00	.00	.00	.00	.00	.00	.00	.00	.00
.00	.00	.00	.00	.00	.00	.00	.00	.00	.00
.00	.00	.00	.00	.00	.00	.00	.00	.00	.00
.00	.00	.00	.00	.00	.00	.00	.00	.00	.00
.00	.00	.00	.00	.00	.00	.00	.00	.00	.00
.00	.00	.00	.00	.00	.00	.00	.00	.00	.00

28 JD INDEX STORM NO. 2
STRM 3.79 PRECIPITATION DEPTH
TRDA 1.00 TRANSPOSITION DRAINAGE AREA

0 PI PRECIPITATION PATTERN

.00	.00	.00	.00	.00	.00	.00	.00	.00	.00
.00	.00	.00	.00	.00	.00	.00	.00	.00	.00
.00	.00	.00	.00	.00	.00	.00	.00	.00	.00
.00	.00	.00	.00	.00	.00	.00	.00	.00	.00
.00	.00	.00	.00	.00	.00	.00	.00	.00	.00
.00	.00	.00	.00	.00	.00	.00	.00	.00	.00
.00	.00	.00	.00	.00	.00	.00	.00	.00	.00
.00	.00	.00	.00	.00	.00	.00	.00	.00	.00
.00	.00	.00	.00	.00	.00	.00	.00	.00	.00
.00	.00	.00	.00	.00	.00	.00	.00	.00	.00
.00	.00	.00	.00	.00	.00	.00	.00	.00	.00
.00	.00	.00	.00	.00	.00	.00	.00	.00	.00
.00	.00	.00	.00	.00	.00	.00	.00	.00	.00
.00	.00	.00	.00	.00	.00	.00	.00	.00	.00
.00	.00	.00	.00	.00	.00	.00	.00	.00	.00
.00	.00	.00	.00	.00	.00	.00	.00	.00	.00
.00	.00	.00	.00	.00	.00	.00	.00	.00	.00
.00	.00	.00	.00	.00	.00	.00	.00	.00	.00
.00	.00	.00	.00	.00	.00	.00	.00	.00	.00
.00	.00	.00	.00	.00	.00	.00	.00	.00	.00
.00	.00	.00	.00	.00	.00	.00	.00	.00	.00
.00	.00	.00	.00	.00	.00	.00	.00	.00	.00
.00	.00	.00	.00	.00	.00	.00	.00	.00	.00
.00	.00	.00	.00	.00	.00	.00	.00	.00	.00
.00	.00	.00	.00	.00	.00	.00	.00	.00	.00
.00	.00	.00	.00	.00	.00	.00	.00	.00	.00
.00	.00	.00	.00	.00	.00	.00	.00	.00	.00
.00	.00	.00	.00	.00	.00	.00	.00	.00	.00
.00	.00	.00	.00	.00	.00	.00	.00	.00	.00
.00	.00	.00	.00	.00	.00	.00	.00	.00	.00
.00	.00	.00	.00	.00	.00	.00	.00	.00	.00
.00	.00	.00	.00	.00	.00	.00	.00	.00	.00
.00	.00	.00	.00	.00	.00	.00	.00	.00	.00
.00	.00	.00	.00	.00	.00	.00	.00	.00	.00
.00	.00	.00	.00	.00	.01	.01	.01	.01	.01
.01	.01	.03	.04	.04	.04	.04	.04	.04	.04
.01	.01	.01	.01	.01	.01	.01	.00	.00	.00
.00	.00	.00	.00	.00	.00	.00	.00	.00	.00
.00	.00	.00	.00	.00	.00	.00	.00	.00	.00
.00	.00	.00	.00	.00	.00	.00	.00	.00	.00
.00	.00	.00	.00	.00	.00	.00	.00	.00	.00
.00	.00	.00	.00	.00	.00	.00	.00	.00	.00
.00	.00	.00	.00	.00	.00	.00	.00	.00	.00
.00	.00	.00	.00	.00	.00	.00	.00	.00	.00
.00	.00	.00	.00	.00	.00	.00	.00	.00	.00
.00	.00	.00	.00	.00	.00	.00	.00	.00	.00
.00	.00	.00	.00	.00	.00	.00	.00	.00	.00
.00	.00	.00	.00	.00	.00	.00	.00	.00	.00
.00	.00	.00	.00	.00	.00	.00	.00	.00	.00
.00	.00	.00	.00	.00	.00	.00	.00	.00	.00
.00	.00	.00	.00	.00	.00	.00	.00	.00	.00
.00	.00	.00	.00	.00	.00	.00	.00	.00	.00

.00	.00	.00	.00	.00	.00	.00	.00	.00	.00
.00	.00	.00	.00	.00	.00	.00	.00	.00	.00
.00	.00	.00	.00	.00	.00	.00	.00	.00	.00
.00	.00	.00	.00	.00	.00	.00	.00	.00	.00
.00	.00	.00	.00	.00	.00	.00	.00	.00	.00
.00	.00	.00	.00	.00	.00	.00	.00	.00	.00
.00	.00	.00	.00	.00	.00	.00	.00	.00	.00
.00	.00	.00	.00	.00	.00	.00	.00	.00	.00
.00	.00	.00	.00	.00	.00	.00	.00	.00	.00
.00	.00	.00	.00	.00	.00	.00	.00	.00	.00
.00	.00	.00	.00	.00	.00	.00	.00	.00	.00
.00	.00	.00	.00	.00	.00	.00	.00	.00	.00
.00	.00	.00	.00	.00	.00	.00	.00	.00	.00
.00	.00	.00	.00	.00	.00	.00	.00	.00	.00
.00	.00	.00	.00	.00	.00	.00	.00	.00	.00
.00	.00	.00	.00	.00	.00	.00	.00	.00	.00
.00	.00	.00	.00	.00	.00	.00	.00	.00	.00
.00	.00	.00	.00	.00	.00	.00	.00	.00	.00
.00	.00	.00	.00	.00	.00	.00	.00	.00	.00
.00	.00	.00	.00	.00	.00	.00	.00	.00	.00

29 JD INDEX STORM NO. 3
STRM 3.68 PRECIPITATION DEPTH
TRDA 5.80 TRANSPOSITION DRAINAGE AREA

0 PI PRECIPITATION PATTERN

.00	.00	.00	.00	.00	.00	.00	.00	.00	.00
.00	.00	.00	.00	.00	.00	.00	.00	.00	.00
.00	.00	.00	.00	.00	.00	.00	.00	.00	.00
.00	.00	.00	.00	.00	.00	.00	.00	.00	.00
.00	.00	.00	.00	.00	.00	.00	.00	.00	.00
.00	.00	.00	.00	.00	.00	.00	.00	.00	.00
.00	.00	.00	.00	.00	.00	.00	.00	.00	.00
.00	.00	.00	.00	.00	.00	.00	.00	.00	.00
.00	.00	.00	.00	.00	.00	.00	.00	.00	.00
.00	.00	.00	.00	.00	.00	.00	.00	.00	.00
.00	.00	.00	.00	.00	.00	.00	.00	.00	.00
.00	.00	.00	.00	.00	.00	.00	.00	.00	.00
.00	.00	.00	.00	.00	.00	.00	.00	.00	.00
.00	.00	.00	.00	.00	.00	.00	.00	.00	.00
.00	.00	.00	.00	.00	.00	.00	.00	.00	.00
.00	.00	.00	.00	.00	.00	.00	.00	.00	.00
.00	.00	.00	.00	.00	.00	.00	.00	.00	.00
.00	.00	.00	.00	.00	.00	.00	.00	.00	.00
.00	.00	.00	.00	.00	.00	.00	.00	.00	.00
.00	.00	.00	.00	.00	.00	.00	.00	.00	.00
.00	.00	.00	.00	.00	.00	.00	.00	.00	.00
.00	.00	.00	.00	.00	.00	.00	.00	.00	.00
.00	.00	.00	.00	.00	.00	.00	.00	.00	.00
.00	.00	.00	.00	.00	.00	.00	.00	.00	.00
.00	.00	.00	.00	.00	.00	.00	.00	.00	.00
.00	.00	.00	.00	.00	.00	.00	.00	.00	.00
.00	.00	.00	.00	.00	.00	.00	.00	.00	.00
.00	.00	.00	.00	.00	.00	.00	.00	.00	.00
.00	.00	.00	.00	.00	.00	.00	.00	.00	.00
.00	.00	.00	.00	.00	.00	.00	.00	.00	.00
.00	.00	.00	.00	.00	.00	.00	.00	.00	.00
.00	.00	.00	.00	.00	.00	.00	.00	.00	.00
.00	.00	.00	.00	.00	.00	.00	.00	.00	.00
.00	.00	.00	.00	.00	.00	.00	.00	.00	.00
.00	.00	.00	.00	.00	.01	.01	.01	.01	.01
.01	.01	.03	.04	.04	.04	.04	.04	.04	.04
.01	.01	.01	.01	.01	.01	.01	.00	.00	.00
.00	.00	.00	.00	.00	.00	.00	.00	.00	.00
.00	.00	.00	.00	.00	.00	.00	.00	.00	.00
.00	.00	.00	.00	.00	.00	.00	.00	.00	.00
.00	.00	.00	.00	.00	.00	.00	.00	.00	.00
.00	.00	.00	.00	.00	.00	.00	.00	.00	.00
.00	.00	.00	.00	.00	.00	.00	.00	.00	.00
.00	.00	.00	.00	.00	.00	.00	.00	.00	.00
.00	.00	.00	.00	.00	.00	.00	.00	.00	.00
.00	.00	.00	.00	.00	.00	.00	.00	.00	.00
.00	.00	.00	.00	.00	.00	.00	.00	.00	.00
.00	.00	.00	.00	.00	.00	.00	.00	.00	.00
.00	.00	.00	.00	.00	.00	.00	.00	.00	.00
.00	.00	.00	.00	.00	.00	.00	.00	.00	.00
.00	.00	.00	.00	.00	.00	.00	.00	.00	.00
.00	.00	.00	.00	.00	.00	.00	.00	.00	.00
.00	.00	.00	.00	.00	.00	.00	.00	.00	.00
.00	.00	.00	.00	.00	.00	.00	.00	.00	.00
.00	.00	.00	.00	.00	.00	.00	.00	.00	.00
.00	.00	.00	.00	.00	.00	.00	.00	.00	.00
.00	.00	.00	.00	.00	.00	.00	.00	.00	.00
.00	.00	.00	.00	.00	.00	.00	.00	.00	.00
.00	.00	.00	.00	.00	.00	.00	.00	.00	.00
.00	.00	.00	.00	.00	.00	.00	.00	.00	.00
.00	.00	.00	.00	.00	.00	.00	.00	.00	.00
.00	.00	.00	.00	.00	.00	.00	.00	.00	.00
.00	.00	.00	.00	.00	.00	.00	.00	.00	.00
.00	.00	.00	.00	.00	.00	.00	.00	.00	.00

.00	.00	.00	.00	.00	.00	.00	.00	.00	.00
.00	.00	.00	.00	.00	.00	.00	.00	.00	.00
.00	.00	.00	.00	.00	.00	.00	.00	.00	.00
.00	.00	.00	.00	.00	.00	.00	.00	.00	.00
.00	.00	.00	.00	.00	.00	.00	.00	.00	.00
.00	.00	.00	.00	.00	.00	.00	.00	.00	.00
.00	.00	.00	.00	.00	.00	.00	.00	.00	.00
.00	.00	.00	.00	.00	.00	.00	.00	.00	.00

30 JD INDEX STORM NO. 4
STRM 3.57 PRECIPITATION DEPTH
TRDA 10.66 TRANSPOSITION DRAINAGE AREA

0 PI PRECIPITATION PATTERN

.00	.00	.00	.00	.00	.00	.00	.00	.00	.00
.00	.00	.00	.00	.00	.00	.00	.00	.00	.00
.00	.00	.00	.00	.00	.00	.00	.00	.00	.00
.00	.00	.00	.00	.00	.00	.00	.00	.00	.00
.00	.00	.00	.00	.00	.00	.00	.00	.00	.00
.00	.00	.00	.00	.00	.00	.00	.00	.00	.00
.00	.00	.00	.00	.00	.00	.00	.00	.00	.00
.00	.00	.00	.00	.00	.00	.00	.00	.00	.00
.00	.00	.00	.00	.00	.00	.00	.00	.00	.00
.00	.00	.00	.00	.00	.00	.00	.00	.00	.00
.00	.00	.00	.00	.00	.00	.00	.00	.00	.00
.00	.00	.00	.00	.00	.00	.00	.00	.00	.00
.00	.00	.00	.00	.00	.00	.00	.00	.00	.00
.00	.00	.00	.00	.00	.00	.00	.00	.00	.00
.00	.00	.00	.00	.00	.00	.00	.00	.00	.00
.00	.00	.00	.00	.00	.00	.00	.00	.00	.00
.00	.00	.00	.00	.00	.00	.00	.00	.00	.00
.00	.00	.00	.00	.00	.00	.00	.00	.00	.00
.00	.00	.00	.00	.00	.00	.00	.00	.00	.00
.00	.00	.00	.00	.00	.00	.00	.00	.00	.00
.00	.00	.00	.00	.00	.00	.00	.00	.00	.00
.00	.00	.00	.00	.00	.00	.00	.00	.00	.00
.00	.00	.00	.00	.00	.00	.00	.00	.00	.00
.00	.00	.00	.00	.00	.00	.00	.00	.00	.00
.00	.00	.00	.00	.00	.00	.00	.00	.00	.00
.00	.00	.00	.00	.00	.00	.00	.00	.00	.00
.00	.00	.00	.00	.00	.00	.00	.00	.00	.00
.00	.00	.00	.00	.00	.00	.00	.00	.00	.00
.00	.00	.00	.00	.00	.00	.00	.00	.00	.00
.00	.00	.00	.00	.00	.00	.00	.00	.00	.00
.00	.00	.00	.00	.00	.00	.00	.00	.00	.00
.00	.00	.00	.00	.00	.00	.00	.00	.00	.00
.00	.00	.00	.00	.00	.00	.00	.00	.00	.00
.00	.00	.00	.00	.00	.00	.00	.00	.00	.00
.00	.00	.00	.00	.00	.01	.01	.01	.01	.01
.01	.01	.03	.04	.04	.04	.04	.04	.04	.04
.01	.01	.01	.01	.01	.01	.01	.00	.00	.00
.00	.00	.00	.00	.00	.00	.00	.00	.00	.00
.00	.00	.00	.00	.00	.00	.00	.00	.00	.00
.00	.00	.00	.00	.00	.00	.00	.00	.00	.00
.00	.00	.00	.00	.00	.00	.00	.00	.00	.00
.00	.00	.00	.00	.00	.00	.00	.00	.00	.00
.00	.00	.00	.00	.00	.00	.00	.00	.00	.00
.00	.00	.00	.00	.00	.00	.00	.00	.00	.00
.00	.00	.00	.00	.00	.00	.00	.00	.00	.00
.00	.00	.00	.00	.00	.00	.00	.00	.00	.00
.00	.00	.00	.00	.00	.00	.00	.00	.00	.00
.00	.00	.00	.00	.00	.00	.00	.00	.00	.00
.00	.00	.00	.00	.00	.00	.00	.00	.00	.00
.00	.00	.00	.00	.00	.00	.00	.00	.00	.00
.00	.00	.00	.00	.00	.00	.00	.00	.00	.00
.00	.00	.00	.00	.00	.00	.00	.00	.00	.00
.00	.00	.00	.00	.00	.00	.00	.00	.00	.00
.00	.00	.00	.00	.00	.00	.00	.00	.00	.00
.00	.00	.00	.00	.00	.00	.00	.00	.00	.00
.00	.00	.00	.00	.00	.00	.00	.00	.00	.00
.00	.00	.00	.00	.00	.00	.00	.00	.00	.00
.00	.00	.00	.00	.00	.00	.00	.00	.00	.00
.00	.00	.00	.00	.00	.00	.00	.00	.00	.00
.00	.00	.00	.00	.00	.00	.00	.00	.00	.00
.00	.00	.00	.00	.00	.00	.00	.00	.00	.00
.00	.00	.00	.00	.00	.00	.00	.00	.00	.00
.00	.00	.00	.00	.00	.00	.00	.00	.00	.00
.00	.00	.00	.00	.00	.00	.00	.00	.00	.00
.00	.00	.00	.00	.00	.00	.00	.00	.00	.00
.00	.00	.00	.00	.00	.00	.00	.00	.00	.00
.00	.00	.00	.00	.00	.00	.00	.00	.00	.00
.00	.00	.00	.00	.00	.00	.00	.00	.00	.00
.00	.00	.00	.00	.00	.00	.00	.00	.00	.00
.00	.00	.00	.00	.00	.00	.00	.00	.00	.00
.00	.00	.00	.00	.00	.00	.00	.00	.00	.00
.00	.00	.00	.00	.00	.00	.00	.00	.00	.00

31 JD INDEX STORM NO. 5
STRM 3.54 PRECIPITATION DEPTH
TRDA 13.70 TRANSPOSITION DRAINAGE AREA

0 PI PRECIPITATION PATTERN

.00	.00	.00	.00	.00	.00	.00	.00	.00	.00
.00	.00	.00	.00	.00	.00	.00	.00	.00	.00
.00	.00	.00	.00	.00	.00	.00	.00	.00	.00
.00	.00	.00	.00	.00	.00	.00	.00	.00	.00
.00	.00	.00	.00	.00	.00	.00	.00	.00	.00
.00	.00	.00	.00	.00	.00	.00	.00	.00	.00
.00	.00	.00	.00	.00	.00	.00	.00	.00	.00
.00	.00	.00	.00	.00	.00	.00	.00	.00	.00
.00	.00	.00	.00	.00	.00	.00	.00	.00	.00
.00	.00	.00	.00	.00	.00	.00	.00	.00	.00
.00	.00	.00	.00	.00	.00	.00	.00	.00	.00
.00	.00	.00	.00	.00	.00	.00	.00	.00	.00
.00	.00	.00	.00	.00	.00	.00	.00	.00	.00
.00	.00	.00	.00	.00	.00	.00	.00	.00	.00
.00	.00	.00	.00	.00	.00	.00	.00	.00	.00
.00	.00	.00	.00	.00	.00	.00	.00	.00	.00
.00	.00	.00	.00	.00	.00	.00	.00	.00	.00
.00	.00	.00	.00	.00	.00	.00	.00	.00	.00
.00	.00	.00	.00	.00	.00	.00	.00	.00	.00
.00	.00	.00	.00	.00	.00	.00	.00	.00	.00
.00	.00	.00	.00	.00	.00	.00	.00	.00	.00
.00	.00	.00	.00	.00	.00	.00	.00	.00	.00
.00	.00	.00	.00	.00	.00	.00	.00	.00	.00
.00	.00	.00	.00	.00	.00	.00	.00	.00	.00
.00	.00	.00	.00	.00	.00	.00	.00	.00	.00
.00	.00	.00	.00	.00	.00	.00	.00	.00	.00
.00	.00	.00	.00	.00	.00	.00	.00	.00	.00
.00	.00	.00	.00	.00	.00	.00	.00	.00	.00
.00	.00	.00	.00	.00	.00	.00	.00	.00	.00
.00	.00	.00	.00	.00	.00	.00	.00	.00	.00
.00	.00	.00	.00	.00	.00	.00	.00	.00	.00
.00	.00	.00	.00	.00	.00	.00	.00	.00	.00
.00	.00	.00	.00	.00	.00	.00	.00	.00	.00
.00	.00	.00	.00	.00	.00	.00	.00	.00	.00
.00	.00	.00	.00	.00	.01	.01	.01	.01	.01
.01	.01	.03	.04	.04	.04	.04	.04	.04	.04
.01	.01	.01	.01	.01	.01	.01	.00	.00	.00
.00	.00	.00	.00	.00	.00	.00	.00	.00	.00
.00	.00	.00	.00	.00	.00	.00	.00	.00	.00
.00	.00	.00	.00	.00	.00	.00	.00	.00	.00
.00	.00	.00	.00	.00	.00	.00	.00	.00	.00
.00	.00	.00	.00	.00	.00	.00	.00	.00	.00
.00	.00	.00	.00	.00	.00	.00	.00	.00	.00
.00	.00	.00	.00	.00	.00	.00	.00	.00	.00
.00	.00	.00	.00	.00	.00	.00	.00	.00	.00
.00	.00	.00	.00	.00	.00	.00	.00	.00	.00
.00	.00	.00	.00	.00	.00	.00	.00	.00	.00
.00	.00	.00	.00	.00	.00	.00	.00	.00	.00
.00	.00	.00	.00	.00	.00	.00	.00	.00	.00
.00	.00	.00	.00	.00	.00	.00	.00	.00	.00
.00	.00	.00	.00	.00	.00	.00	.00	.00	.00
.00	.00	.00	.00	.00	.00	.00	.00	.00	.00
.00	.00	.00	.00	.00	.00	.00	.00	.00	.00
.00	.00	.00	.00	.00	.00	.00	.00	.00	.00
.00	.00	.00	.00	.00	.00	.00	.00	.00	.00
.00	.00	.00	.00	.00	.00	.00	.00	.00	.00
.00	.00	.00	.00	.00	.00	.00	.00	.00	.00
.00	.00	.00	.00	.00	.00	.00	.00	.00	.00
.00	.00	.00	.00	.00	.00	.00	.00	.00	.00
.00	.00	.00	.00	.00	.00	.00	.00	.00	.00
.00	.00	.00	.00	.00	.00	.00	.00	.00	.00
.00	.00	.00	.00	.00	.00	.00	.00	.00	.00
.00	.00	.00	.00	.00	.00	.00	.00	.00	.00
.00	.00	.00	.00	.00	.00	.00	.00	.00	.00
.00	.00	.00	.00	.00	.00	.00	.00	.00	.00
.00	.00	.00	.00	.00	.00	.00	.00	.00	.00
.00	.00	.00	.00	.00	.00	.00	.00	.00	.00
.00	.00	.00	.00	.00	.00	.00	.00	.00	.00
.00	.00	.00	.00	.00	.00	.00	.00	.00	.00
.00	.00	.00	.00	.00	.00	.00	.00	.00	.00
.00	.00	.00	.00	.00	.00	.00	.00	.00	.00
.00	.00	.00	.00	.00	.00	.00	.00	.00	.00

32 JD INDEX STORM NO. 6

STRM 3.47 PRECIPITATION DEPTH

TRDA 20.00 TRANSPOSITION DRAINAGE AREA

0 PI PRECIPITATION PATTERN

.00	.00	.00	.00	.00	.00	.00	.00	.00	.00
.00	.00	.00	.00	.00	.00	.00	.00	.00	.00
.00	.00	.00	.00	.00	.00	.00	.00	.00	.00
.00	.00	.00	.00	.00	.00	.00	.00	.00	.00
.00	.00	.00	.00	.00	.00	.00	.00	.00	.00
.00	.00	.00	.00	.00	.00	.00	.00	.00	.00
.00	.00	.00	.00	.00	.00	.00	.00	.00	.00
.00	.00	.00	.00	.00	.00	.00	.00	.00	.00
.00	.00	.00	.00	.00	.00	.00	.00	.00	.00
.00	.00	.00	.00	.00	.00	.00	.00	.00	.00

.00	.00	.00	.00	.00	.00	.00	.00	.00	.00
.00	.00	.00	.00	.00	.00	.00	.00	.00	.00
.00	.00	.00	.00	.00	.00	.00	.00	.00	.00
.00	.00	.00	.00	.00	.00	.00	.00	.00	.00
.00	.00	.00	.00	.00	.00	.00	.00	.00	.00
.00	.00	.00	.00	.00	.00	.00	.00	.00	.00
.00	.00	.00	.00	.00	.00	.00	.00	.00	.00
.00	.00	.00	.00	.00	.00	.00	.00	.00	.00
.00	.00	.00	.00	.00	.00	.00	.00	.00	.00
.00	.00	.00	.00	.00	.00	.00	.00	.00	.00
.00	.00	.00	.00	.00	.00	.00	.00	.00	.00
.00	.00	.00	.00	.00	.00	.00	.00	.00	.00
.00	.00	.00	.00	.00	.00	.00	.00	.00	.00
.00	.00	.00	.00	.00	.00	.00	.00	.00	.00
.00	.00	.00	.00	.00	.00	.00	.00	.00	.00
.00	.00	.00	.00	.00	.00	.00	.00	.00	.00
.00	.00	.00	.00	.00	.00	.00	.00	.00	.00
.00	.00	.00	.00	.00	.00	.00	.00	.00	.00
.00	.00	.00	.00	.00	.00	.00	.00	.00	.00
.00	.00	.00	.00	.00	.00	.00	.00	.00	.00
.00	.00	.00	.00	.00	.00	.00	.00	.00	.00
.00	.00	.00	.00	.00	.00	.00	.00	.00	.00
.00	.00	.00	.00	.00	.00	.00	.00	.00	.00
.00	.00	.00	.00	.00	.00	.00	.00	.00	.00
.00	.00	.00	.00	.00	.01	.01	.01	.01	.01
.01	.01	.03	.04	.04	.04	.04	.04	.04	.04
.01	.01	.01	.01	.01	.01	.01	.00	.00	.00
.00	.00	.00	.00	.00	.00	.00	.00	.00	.00
.00	.00	.00	.00	.00	.00	.00	.00	.00	.00
.00	.00	.00	.00	.00	.00	.00	.00	.00	.00
.00	.00	.00	.00	.00	.00	.00	.00	.00	.00
.00	.00	.00	.00	.00	.00	.00	.00	.00	.00
.00	.00	.00	.00	.00	.00	.00	.00	.00	.00
.00	.00	.00	.00	.00	.00	.00	.00	.00	.00
.00	.00	.00	.00	.00	.00	.00	.00	.00	.00
.00	.00	.00	.00	.00	.00	.00	.00	.00	.00
.00	.00	.00	.00	.00	.00	.00	.00	.00	.00
.00	.00	.00	.00	.00	.00	.00	.00	.00	.00
.00	.00	.00	.00	.00	.00	.00	.00	.00	.00
.00	.00	.00	.00	.00	.00	.00	.00	.00	.00
.00	.00	.00	.00	.00	.00	.00	.00	.00	.00
.00	.00	.00	.00	.00	.00	.00	.00	.00	.00
.00	.00	.00	.00	.00	.00	.00	.00	.00	.00
.00	.00	.00	.00	.00	.00	.00	.00	.00	.00
.00	.00	.00	.00	.00	.00	.00	.00	.00	.00
.00	.00	.00	.00	.00	.00	.00	.00	.00	.00
.00	.00	.00	.00	.00	.00	.00	.00	.00	.00
.00	.00	.00	.00	.00	.00	.00	.00	.00	.00
.00	.00	.00	.00	.00	.00	.00	.00	.00	.00
.00	.00	.00	.00	.00	.00	.00	.00	.00	.00
.00	.00	.00	.00	.00	.00	.00	.00	.00	.00
.00	.00	.00	.00	.00	.00	.00	.00	.00	.00
.00	.00	.00	.00	.00	.00	.00	.00	.00	.00
.00	.00	.00	.00	.00	.00	.00	.00	.00	.00
.00	.00	.00	.00	.00	.00	.00	.00	.00	.00
.00	.00	.00	.00	.00	.00	.00	.00	.00	.00
.00	.00	.00	.00	.00	.00	.00	.00	.00	.00
.00	.00	.00	.00	.00	.00	.00	.00	.00	.00
.00	.00	.00	.00	.00	.00	.00	.00	.00	.00
.00	.00	.00	.00	.00	.00	.00	.00	.00	.00
.00	.00	.00	.00	.00	.00	.00	.00	.00	.00
.00	.00	.00	.00	.00	.00	.00	.00	.00	.00

33 JD INDEX STORM NO. 7
STRM 3.32 PRECIPITATION DEPTH
TRDA 50.00 TRANSPOSITION DRAINAGE AREA

0 PI PRECIPITATION PATTERN

.00	.00	.00	.00	.00	.00	.00	.00	.00	.00
.00	.00	.00	.00	.00	.00	.00	.00	.00	.00
.00	.00	.00	.00	.00	.00	.00	.00	.00	.00
.00	.00	.00	.00	.00	.00	.00	.00	.00	.00
.00	.00	.00	.00	.00	.00	.00	.00	.00	.00
.00	.00	.00	.00	.00	.00	.00	.00	.00	.00
.00	.00	.00	.00	.00	.00	.00	.00	.00	.00
.00	.00	.00	.00	.00	.00	.00	.00	.00	.00
.00	.00	.00	.00	.00	.00	.00	.00	.00	.00
.00	.00	.00	.00	.00	.00	.00	.00	.00	.00
.00	.00	.00	.00	.00	.00	.00	.00	.00	.00
.00	.00	.00	.00	.00	.00	.00	.00	.00	.00
.00	.00	.00	.00	.00	.00	.00	.00	.00	.00
.00	.00	.00	.00	.00	.00	.00	.00	.00	.00
.00	.00	.00	.00	.00	.00	.00	.00	.00	.00
.00	.00	.00	.00	.00	.00	.00	.00	.00	.00
.00	.00	.00	.00	.00	.00	.00	.00	.00	.00
.00	.00	.00	.00	.00	.00	.00	.00	.00	.00
.00	.00	.00	.00	.00	.00	.00	.00	.00	.00
.00	.00	.00	.00	.00	.00	.00	.00	.00	.00
.00	.00	.00	.00	.00	.00	.00	.00	.00	.00
.00	.00	.00	.00	.00	.00	.00	.00	.00	.00

.00	.00	.00	.00	.00	.00	.00	.00	.00	.00
.00	.00	.00	.00	.00	.00	.00	.00	.00	.00
.00	.00	.00	.00	.00	.00	.00	.00	.00	.00
.00	.00	.00	.00	.00	.00	.00	.00	.00	.00
.00	.00	.00	.00	.00	.00	.00	.00	.00	.00
.00	.00	.00	.00	.00	.00	.00	.00	.00	.00
.00	.00	.00	.00	.00	.00	.00	.00	.00	.00
.00	.00	.00	.00	.00	.00	.00	.00	.00	.00
.00	.00	.00	.00	.00	.00	.00	.00	.00	.00
.00	.00	.00	.00	.00	.00	.00	.00	.00	.00
.00	.00	.00	.00	.00	.00	.00	.00	.00	.00
.00	.00	.00	.00	.00	.00	.00	.00	.00	.00
.00	.00	.00	.00	.00	.01	.01	.01	.01	.01
.01	.01	.03	.04	.04	.04	.04	.04	.04	.04
.01	.01	.01	.01	.01	.01	.01	.00	.00	.00
.00	.00	.00	.00	.00	.00	.00	.00	.00	.00
.00	.00	.00	.00	.00	.00	.00	.00	.00	.00
.00	.00	.00	.00	.00	.00	.00	.00	.00	.00
.00	.00	.00	.00	.00	.00	.00	.00	.00	.00
.00	.00	.00	.00	.00	.00	.00	.00	.00	.00
.00	.00	.00	.00	.00	.00	.00	.00	.00	.00
.00	.00	.00	.00	.00	.00	.00	.00	.00	.00
.00	.00	.00	.00	.00	.00	.00	.00	.00	.00
.00	.00	.00	.00	.00	.00	.00	.00	.00	.00
.00	.00	.00	.00	.00	.00	.00	.00	.00	.00
.00	.00	.00	.00	.00	.00	.00	.00	.00	.00
.00	.00	.00	.00	.00	.00	.00	.00	.00	.00
.00	.00	.00	.00	.00	.00	.00	.00	.00	.00
.00	.00	.00	.00	.00	.00	.00	.00	.00	.00
.00	.00	.00	.00	.00	.00	.00	.00	.00	.00
.00	.00	.00	.00	.00	.00	.00	.00	.00	.00
.00	.00	.00	.00	.00	.00	.00	.00	.00	.00
.00	.00	.00	.00	.00	.00	.00	.00	.00	.00
.00	.00	.00	.00	.00	.00	.00	.00	.00	.00
.00	.00	.00	.00	.00	.00	.00	.00	.00	.00
.00	.00	.00	.00	.00	.00	.00	.00	.00	.00
.00	.00	.00	.00	.00	.00	.00	.00	.00	.00
.00	.00	.00	.00	.00	.00	.00	.00	.00	.00
.00	.00	.00	.00	.00	.00	.00	.00	.00	.00
.00	.00	.00	.00	.00	.00	.00	.00	.00	.00
.00	.00	.00	.00	.00	.00	.00	.00	.00	.00
.00	.00	.00	.00	.00	.00	.00	.00	.00	.00
.00	.00	.00	.00	.00	.00	.00	.00	.00	.00
.00	.00	.00	.00	.00	.00	.00	.00	.00	.00
.00	.00	.00	.00	.00	.00	.00	.00	.00	.00
.00	.00	.00	.00	.00	.00	.00	.00	.00	.00
.00	.00	.00	.00	.00	.00	.00	.00	.00	.00
.00	.00	.00	.00	.00	.00	.00	.00	.00	.00
.00	.00	.00	.00	.00	.00	.00	.00	.00	.00
.00	.00	.00	.00	.00	.00	.00	.00	.00	.00
.00	.00	.00	.00	.00	.00	.00	.00	.00	.00
.00	.00	.00	.00	.00	.00	.00	.00	.00	.00
.00	.00	.00	.00	.00	.00	.00	.00	.00	.00
.00	.00	.00	.00	.00	.00	.00	.00	.00	.00
.00	.00	.00	.00	.00	.00	.00	.00	.00	.00
.00	.00	.00	.00	.00	.00	.00	.00	.00	.00

WARNING EXCESS AT PONDING LESS THAN ZERO FOR PERIOD. EXCESS SET TO ZERO
WARNING EXCESS AT PONDING LESS THAN ZERO FOR PERIOD. EXCESS SET TO ZERO

*** ***

```
              **************
              *            *
1649 KK       *    TOLSCH  *
              *            *
              **************

1650 KO            OUTPUT CONTROL VARIABLES
                        IPRNT           3  PRINT CONTROL
                        IPLOT           0  PLOT CONTROL
                        QSCAL          0.  HYDROGRAPH PLOT SCALE
                            Divert out of storm drain through splitter structure.  Divert flow amount
                            such that the flow at CP415A is less than or equal to 1528 cfs, the
                            capacity of LasSendas channel.

     DT            DIVERSION
                        ISTAD        MCDB  DIVERSION HYDROGRAPH IDENTIFICATION

     DI               INFLOW         .00    331.00    419.00    558.00    658.00    693.00    728.00    901.00   1043.00

     DQ        DIVERTED FLOW         .00       .00     61.00    176.00    262.00    292.00    323.00    473.00    594.00
                                                                   ***
      ***              ***              ***              ***              ***

                          DIVERSION HYDROGRAPH     MCDB
                        TRANSPOSITION AREA       .0 SQ MI

  PEAK FLOW      TIME                          MAXIMUM AVERAGE FLOW
                                     6-HR        24-HR        72-HR      66.63-HR
+   (CFS)        (HR)
                             (CFS)
```

```
+     317.      12.17                    25.          6.          2.          2.
                              (INCHES)  .146        .146        .146        .146
                               (AC-FT)   12.         12.         12.         12.

                          CUMULATIVE AREA =    1.59 SQ MI

      ***                 ***            ***            ***            ***

                          HYDROGRAPH AT STATION   TOLSCH
                         TRANSPOSITION AREA        .0 SQ MI

  PEAK FLOW      TIME                          MAXIMUM AVERAGE FLOW
                                     6-HR       24-HR       72-HR     66.63-HR
+   (CFS)        (HR)
                            (CFS)
+     404.      12.17                   132.         48.         18.         18.
                              (INCHES)  .776       1.114       1.171       1.171
                               (AC-FT)   66.         94.         99.         99.

                          CUMULATIVE AREA =    1.59 SQ MI

      ***                 ***            ***            ***            ***

                          DIVERSION HYDROGRAPH     MCDB
                         TRANSPOSITION AREA       1.0 SQ MI

  PEAK FLOW      TIME                          MAXIMUM AVERAGE FLOW
                                     6-HR       24-HR       72-HR     66.63-HR
+   (CFS)        (HR)
                            (CFS)
+     313.      12.17                    24.          6.          2.          2.
                              (INCHES)  .142        .142        .142        .142
                               (AC-FT)   12.         12.         12.         12.

                          CUMULATIVE AREA =    1.59 SQ MI

      ***                 ***            ***            ***            ***

                          HYDROGRAPH AT STATION   TOLSCH
                         TRANSPOSITION AREA       1.0 SQ MI

  PEAK FLOW      TIME                          MAXIMUM AVERAGE FLOW
                                     6-HR       24-HR       72-HR     66.63-HR
+   (CFS)        (HR)
                            (CFS)
+     404.      12.17                   132.         47.         18.         18.
                              (INCHES)  .772       1.107       1.163       1.163
                               (AC-FT)   65.         94.         98.         98.

                          CUMULATIVE AREA =    1.59 SQ MI

      ***                 ***            ***            ***            ***

                          DIVERSION HYDROGRAPH     MCDB
                         TRANSPOSITION AREA       5.8 SQ MI

  PEAK FLOW      TIME                          MAXIMUM AVERAGE FLOW
                                     6-HR       24-HR       72-HR     66.63-HR
+   (CFS)        (HR)
                            (CFS)
+     283.      12.20                    22.          6.          2.          2.
                              (INCHES)  .129        .129        .129        .129
                               (AC-FT)   11.         11.         11.         11.

                          CUMULATIVE AREA =    1.59 SQ MI

      ***                 ***            ***            ***            ***

                          HYDROGRAPH AT STATION   TOLSCH
                         TRANSPOSITION AREA       5.8 SQ MI

  PEAK FLOW      TIME                          MAXIMUM AVERAGE FLOW
                                     6-HR       24-HR       72-HR     66.63-HR
+   (CFS)        (HR)
                            (CFS)
      399.      12.20                   128.         46.         17.         17.
                              (INCHES)  .748       1.068       1.119       1.119
                               (AC-FT)   63.         90.         95.         95.

                          CUMULATIVE AREA =    1.59 SQ MI

      ***                 ***            ***            ***            ***

                          DIVERSION HYDROGRAPH     MCDB
```

TRANSPOSITION AREA 10.7 SQ MI

PEAK FLOW (CFS)	TIME (HR)		MAXIMUM AVERAGE FLOW 6-HR	24-HR	72-HR	66.63-HR
+ 263.	12.20	(CFS)	20.	5.	2.	2.
		(INCHES)	.116	.116	.116	.116
		(AC-FT)	10.	10.	10.	10.

CUMULATIVE AREA = 1.59 SQ MI

*** *** *** *** ***

HYDROGRAPH AT STATION TOLSCH
TRANSPOSITION AREA 10.7 SQ MI

PEAK FLOW (CFS)	TIME (HR)		MAXIMUM AVERAGE FLOW 6-HR	24-HR	72-HR	66.63-HR
+ 396.	12.20	(CFS)	124.	44.	17.	17.
		(INCHES)	.727	1.033	1.080	1.080
		(AC-FT)	61.	87.	91.	91.

CUMULATIVE AREA = 1.59 SQ MI

*** *** *** *** ***

DIVERSION HYDROGRAPH MCDB
TRANSPOSITION AREA 13.7 SQ MI

PEAK FLOW (CFS)	TIME (HR)		MAXIMUM AVERAGE FLOW 6-HR	24-HR	72-HR	66.63-HR
+ 251.	12.20	(CFS)	19.	5.	2.	2.
		(INCHES)	.113	.113	.113	.113
		(AC-FT)	10.	10.	10.	10.

CUMULATIVE AREA = 1.59 SQ MI

*** *** *** *** ***

HYDROGRAPH AT STATION TOLSCH
TRANSPOSITION AREA 13.7 SQ MI

PEAK FLOW (CFS)	TIME (HR)		MAXIMUM AVERAGE FLOW 6-HR	24-HR	72-HR	66.63-HR
+ 394.	12.20	(CFS)	122.	43.	16.	16.
		(INCHES)	.718	1.019	1.065	1.065
		(AC-FT)	61.	86.	90.	90.

CUMULATIVE AREA = 1.59 SQ MI

*** *** *** *** ***

DIVERSION HYDROGRAPH MCDB
TRANSPOSITION AREA 20.0 SQ MI

PEAK FLOW (CFS)	TIME (HR)		MAXIMUM AVERAGE FLOW 6-HR	24-HR	72-HR	66.63-HR
+ 230.	12.23	(CFS)	18.	4.	2.	2.
		(INCHES)	.104	.104	.104	.104
		(AC-FT)	9.	9.	9.	9.

CUMULATIVE AREA = 1.59 SQ MI

*** *** *** *** ***

HYDROGRAPH AT STATION TOLSCH
TRANSPOSITION AREA 20.0 SQ MI

PEAK FLOW (CFS)	TIME (HR)		MAXIMUM AVERAGE FLOW 6-HR	24-HR	72-HR	66.63-HR
+ 391.	12.23	(CFS)	120.	42.	16.	16.
		(INCHES)	.703	.995	1.038	1.038
		(AC-FT)	59.	84.	88.	88.

```
                    CUMULATIVE AREA =    1.59 SQ MI

  ***            ***            ***            ***            ***

                  DIVERSION HYDROGRAPH     MCDB
                TRANSPOSITION AREA     50.0 SQ MI

  PEAK FLOW     TIME                          MAXIMUM AVERAGE FLOW
                                     6-HR       24-HR       72-HR     66.63-HR
+   (CFS)       (HR)
                          (CFS)
+     195.     12.17                15.          4.          1.          1.
                        (INCHES)   .087        .087        .087        .087
                         (AC-FT)     7.          7.          7.          7.

                    CUMULATIVE AREA =    1.59 SQ MI

  ***            ***            ***            ***            ***

                  HYDROGRAPH AT STATION   TOLSCH
                TRANSPOSITION AREA     50.0 SQ MI

  PEAK FLOW     TIME                          MAXIMUM AVERAGE FLOW
                                     6-HR       24-HR       72-HR     66.63-HR
+   (CFS)       (HR)
                          (CFS)
+     385.     12.17               114.         40.         15.         15.
                        (INCHES)   .669        .941        .978        .978
                         (AC-FT)    57.         80.         83.         83.

                    CUMULATIVE AREA =    1.59 SQ MI

  ***            ***            ***            ***            ***


              INTERPOLATED DIVERSION HYDROGRAPH AT     MCDB

  PEAK FLOW     TIME                          MAXIMUM AVERAGE FLOW
                                     6-HR       24-HR       72-HR     66.63-HR
+   (CFS)       (HR)
                          (CFS)
+     302.     12.17                24.          6.          2.          2.
                        (INCHES)   .139        .139        .139        .139
                         (AC-FT)    12.         12.         12.         12.

                    CUMULATIVE AREA =    1.59 SQ MI

  ***            ***            ***            ***            ***


                    INTERPOLATED HYDROGRAPH AT   TOLSCH

  PEAK FLOW     TIME                          MAXIMUM AVERAGE FLOW
                                     6-HR       24-HR       72-HR     66.63-HR
+   (CFS)       (HR)
                          (CFS)
+     402.     12.17               131.         47.         18.         18.
                        (INCHES)   .766       1.097       1.152       1.152
                         (AC-FT)    65.         93.         97.         97.

                    CUMULATIVE AREA =    1.59 SQ MI

      WARNING EXCESS AT PONDING LESS THAN ZERO FOR PERIOD. EXCESS SET TO ZERO


*** *** *** *** *** *** *** *** *** *** *** *** *** *** *** *** *** *** *** *** *** *** *** *** *** *** *** *** *** *** *** ***


          **************
          *            *
2024 KK   *     RMCDB  *
          *            *
          **************

   5 KO        OUTPUT CONTROL VARIABLES
                     IPRNT          3  PRINT CONTROL
                     IPLOT          0  PLOT CONTROL
                     QSCAL         0.  HYDROGRAPH PLOT SCALE
                         Retrieve flow that remained in the storm drain and goes to the McDowell Road
                         detention basin

2028 DR        RETRIEVE DIVERSION HYDROGRAPH
                     ISTAD        MCDB  DIVERSION HYDROGRAPH IDENTIFICATION
```

```
     ***              ***              ***              ***              ***

                        HYDROGRAPH AT STATION    RMCDB
                      TRANSPOSITION AREA        .0 SQ MI

  PEAK FLOW      TIME                          MAXIMUM AVERAGE FLOW
                                     6-HR        24-HR        72-HR      66.63-HR
+   (CFS)        (HR)
                          (CFS)
+     317.      12.17                25.          6.           2.           2.
                        (INCHES)    .078         .078         .078         .078
                         (AC-FT)     12.          12.          12.          12.

                         CUMULATIVE AREA =    1.59 SQ MI

     ***              ***              ***              ***              ***

                        HYDROGRAPH AT STATION    RMCDB
                      TRANSPOSITION AREA       1.0 SQ MI

  PEAK FLOW      TIME                          MAXIMUM AVERAGE FLOW
                                     6-HR        24-HR        72-HR      66.63-HR
+   (CFS)        (HR)
                          (CFS)
+     313.      12.17                24.          6.           2.           2.
                        (INCHES)    .076         .076         .076         .076
                         (AC-FT)     12.          12.          12.          12.

                         CUMULATIVE AREA =    1.59 SQ MI

     ***              ***              ***              ***              ***

                        HYDROGRAPH AT STATION    RMCDB
                      TRANSPOSITION AREA       5.8 SQ MI

  PEAK FLOW      TIME                          MAXIMUM AVERAGE FLOW
                                     6-HR        24-HR        72-HR      66.63-HR
+   (CFS)        (HR)
                          (CFS)
+     283.      12.20                22.          6.           2.           2.
                        (INCHES)    .069         .069         .069         .069
                         (AC-FT)     11.          11.          11.          11.

                         CUMULATIVE AREA =    1.59 SQ MI

     ***              ***              ***              ***              ***

                        HYDROGRAPH AT STATION    RMCDB
                      TRANSPOSITION AREA      10.7 SQ MI

  PEAK FLOW      TIME                          MAXIMUM AVERAGE FLOW
                                     6-HR        24-HR        72-HR      66.63-HR
+   (CFS)        (HR)
                          (CFS)
+     263.      12.20                20.          5.           2.           2.
                        (INCHES)    .062         .062         .062         .062
                         (AC-FT)     10.          10.          10.          10.

                         CUMULATIVE AREA =    1.59 SQ MI

     ***              ***              ***              ***              ***

                        HYDROGRAPH AT STATION    RMCDB
                      TRANSPOSITION AREA      13.7 SQ MI

  PEAK FLOW      TIME                          MAXIMUM AVERAGE FLOW
                                     6-HR        24-HR        72-HR      66.63-HR
+   (CFS)        (HR)
                          (CFS)
+     251.      12.20                19.          5.           2.           2.
                        (INCHES)    .060         .060         .060         .060
                         (AC-FT)     10.          10.          10.          10.

                         CUMULATIVE AREA =    1.59 SQ MI

     ***              ***              ***              ***              ***

                        HYDROGRAPH AT STATION    RMCDB
                      TRANSPOSITION AREA      20.0 SQ MI

  PEAK FLOW      TIME                          MAXIMUM AVERAGE FLOW
                                     6-HR        24-HR        72-HR      66.63-HR
+   (CFS)        (HR)
                          (CFS)
```

```
+     230.     12.23                    18.          4.          2.          2.
                             (INCHES)  .055        .055        .055        .055
                              (AC-FT)    9.          9.          9.          9.

                          CUMULATIVE AREA =    1.59 SQ MI

      ***                ***            ***            ***            ***

                          HYDROGRAPH AT STATION    RMCDB
                         TRANSPOSITION AREA     50.0 SQ MI

  PEAK FLOW     TIME                          MAXIMUM AVERAGE FLOW
                                     6-HR       24-HR       72-HR     66.63-HR
+   (CFS)       (HR)
                            (CFS)
+     195.     12.17                    15.          4.          1.          1.
                             (INCHES)  .047        .047        .047        .047
                              (AC-FT)    7.          7.          7.          7.

                          CUMULATIVE AREA =    1.59 SQ MI

      ***                ***            ***            ***            ***


                          INTERPOLATED HYDROGRAPH AT    RMCDB

  PEAK FLOW     TIME                          MAXIMUM AVERAGE FLOW
                                     6-HR       24-HR       72-HR     66.63-HR
+   (CFS)       (HR)
                            (CFS)
+     302.     12.17                    24.          6.          2.          2.
                             (INCHES)  .139        .139        .139        .139
                              (AC-FT)   12.         12.         12.         12.

                          CUMULATIVE AREA =    1.59 SQ MI

1
                                          RUNOFF SUMMARY
                                   FLOW IN CUBIC FEET PER SECOND
                                TIME IN HOURS,  AREA IN SQUARE MILES

                                     PEAK   TIME OF     AVERAGE FLOW FOR MAXIMUM PERIOD      BASIN     MAXIMUM     TIM
          OPERATION        STATION   FLOW    PEAK                                          AREA      STAGE       MAX
+                                                          6-HOUR     24-HOUR     72-HOUR

          HYDROGRAPH AT
+                             10      972.   12.27         119.        33.         12.       .69
          ROUTED TO
+                            R10      903.   12.40         119.        33.         12.       .69
          ROUTED TO
+                            R12      845.   12.60         118.        33.         12.       .69
          HYDROGRAPH AT
+                             20     1103.   12.23         165.        45.         16.      1.17
          DIVERSION TO
+                           BS20     1103.   12.23          92.        24.          9.      1.17
          HYDROGRAPH AT
+                            D20      839.   12.50          79.        21.          8.      1.17
          HYDROGRAPH AT
+                           RT20     1103.   12.23          92.        24.          9.      1.17
          ROUTED TO
+                            S20       16.   12.50          15.        12.          7.      1.17
          3 COMBINED AT
+                            C20     1554.   12.57         207.        63.         26.      1.86
          ROUTED TO
+                            R20     1554.   12.57         207.        63.         26.      1.86
          HYDROGRAPH AT
+                             40     2753.   12.30         286.        79.         28.      2.23
          DIVERSION TO
+                           BS40     1789.   12.13          72.        20.          7.      2.23
          HYDROGRAPH AT
+                            D40     2753.   12.30         227.        59.         21.      2.23
          HYDROGRAPH AT
+                           RT40     1789.   12.13          72.        20.          7.      2.23
          ROUTED TO
```

+	S40	13.	12.20	12.	10.	6.	2.23
3 COMBINED AT	C40	3088.	12.33	437.	129.	52.	4.08
HYDROGRAPH AT +	60	1654.	12.40	244.	66.	24.	1.75
DIVERSION TO +	BS60	11.	9.17	7.	2.	1.	1.75
HYDROGRAPH AT +	D60	1654.	12.40	244.	64.	23.	1.75
HYDROGRAPH AT +	RT60	11.	9.17	7.	2.	1.	1.75
ROUTED TO +	SB60	2.	9.33	2.	1.	1.	1.75
3 COMBINED AT +	C60	4599.	12.33	665.	190.	75.	5.84
ROUTED TO +	S60	101.	14.77	101.	98.	54.	5.84
ROUTED TO +	R60	101.	14.77	101.	98.	53.	5.84
ROUTED TO +	RR60	101.	14.87	101.	98.	53.	5.84
HYDROGRAPH AT +	80	1951.	12.13	199.	53.	19.	1.49
DIVERSION TO +	BS80	945.	11.93	35.	10.	3.	1.49
HYDROGRAPH AT +	D80	1951.	12.13	170.	43.	16.	1.49
HYDROGRAPH AT +	RT80	945.	11.93	35.	10.	3.	1.49
ROUTED TO +	S80	7.	12.00	6.	5.	3.	1.49
2 COMBINED AT +	C80	1958.	12.13	176.	48.	19.	1.49
2 COMBINED AT +	CC80	1958.	12.13	264.	144.	75.	1.49
ROUTED TO +	R80	1950.	12.17	263.	144.	75.	1.49
HYDROGRAPH AT +	100	453.	12.20	66.	18.	6.	.49
DIVERSION TO +	BS100	422.	12.13	19.	5.	2.	.49
HYDROGRAPH AT +	D100	453.	12.20	50.	13.	5.	.49
HYDROGRAPH AT +	RT100	422.	12.13	19.	5.	2.	.49
ROUTED TO +	S100	4.	12.20	3.	3.	2.	.49
3 COMBINED AT +	C100	2352.	12.20	314.	159.	80.	1.98
ROUTED TO +	R100	2303.	12.23	313.	159.	80.	1.98
HYDROGRAPH AT +	120	3345.	12.27	342.	93.	34.	2.20
DIVERSION TO +	BS120	13.	7.50	10.	3.	1.	2.20
HYDROGRAPH AT +	D120	3345.	12.27	342.	90.	33.	2.20
HYDROGRAPH AT +	RT120	13.	7.50	10.	3.	1.	2.20
ROUTED TO							

+	S120	2.	8.00	2.	2.	1.	2.20
3 COMBINED AT	C120	5561.	12.23	633.	242.	112.	4.18
ROUTED TO +	R120	5512.	12.27	633.	242.	111.	4.18
HYDROGRAPH AT +	140	665.	12.13	67.	18.	6.	.60
DIVERSION TO +	BS140	369.	11.97	11.	3.	1.	.60
HYDROGRAPH AT +	D140	665.	12.13	58.	15.	5.	.60
HYDROGRAPH AT +	RT140	369.	11.97	11.	3.	1.	.60
ROUTED TO +	S140	2.	12.03	2.	2.	1.	.60
3 COMBINED AT +	C140	6028.	12.27	687.	257.	117.	4.78
HYDROGRAPH AT +	150	593.	12.17	51.	14.	5.	.41
ROUTED TO +	R150	567.	12.23	51.	14.	5.	.41
ROUTED TO +	R152	513.	12.33	51.	14.	5.	.41
HYDROGRAPH AT +	160	224.	12.40	36.	9.	3.	.37
DIVERSION TO +	BS160	82.	12.13	2.	1.	0.	.37
HYDROGRAPH AT +	D160	224.	12.40	34.	9.	3.	.37
HYDROGRAPH AT +	RT160	82.	12.13	2.	1.	0.	.37
ROUTED TO +	S160	1.	12.20	1.	1.	0.	.37
3 COMBINED AT +	C160	732.	12.37	86.	23.	8.	.77
HYDROGRAPH AT +	180	851.	12.37	98.	25.	9.	1.01
3 COMBINED AT +	C180	7186.	12.27	850.	298.	131.	6.56
HYDROGRAPH AT +	210	1322.	12.17	111.	29.	10.	.79
ROUTED TO +	R210	1246.	12.23	111.	29.	10.	.79
HYDROGRAPH AT +	240	1513.	12.30	167.	42.	15.	1.41
2 COMBINED AT +	C240	2684.	12.27	273.	70.	25.	2.20
ROUTED TO +	S240	799.	12.70	226.	59.	21.	2.20
ROUTED TO +	R240	795.	12.77	225.	59.	21.	2.20
HYDROGRAPH AT +	220	676.	12.20	68.	18.	6.	.47
2 COMBINED AT +	C220	955.	12.60	288.	75.	27.	2.67
ROUTED TO +	SW220	895.	12.80	280.	73.	26.	2.67
ROUTED TO +	R220	893.	12.87	280.	73.	26.	2.67
HYDROGRAPH AT							

+		190	1471.	12.17	123.	33.	12.	.92
	ROUTED TO	R190	1415.	12.23	123.	33.	12.	.92
+	ROUTED TO	R192	1359.	12.30	123.	33.	12.	.92
+	HYDROGRAPH AT	200	831.	12.17	72.	20.	7.	.53
+	3 COMBINED AT	C200	2264.	12.30	459.	122.	44.	4.12
+	ROUTED TO	SW200	2144.	12.37	454.	119.	43.	4.12
+	ROUTED TO	R200	2135.	12.37	454.	119.	43.	4.12
+	ROUTED TO	SS200	1364.	12.73	333.	88.	32.	4.12
+	ROUTED TO	RR200	1343.	12.83	331.	88.	32.	4.12
+	2 COMBINED AT	CC180	7186.	12.27	1159.	382.	161.	10.68
+	ROUTED TO	S180	124.	24.43	124.	124.	88.	10.68
+	ROUTED TO	R180	124.	24.47	124.	124.	88.	10.68
+	HYDROGRAPH AT	260	427.	12.10	42.	11.	4.	.26
+	2 COMBINED AT	C260	428.	12.10	139.	130.	102.	.26
	ROUTED TO	R260	411.	12.20	139.	130.	102.	.26
+	HYDROGRAPH AT	280	527.	12.10	46.	13.	5.	.32
+	2 COMBINED AT	C280	893.	12.13	180.	140.	106.	.58
+	ROUTED TO	R280	870.	12.20	179.	140.	106.	.58
+	HYDROGRAPH AT	300	428.	12.10	37.	11.	4.	.29
+	2 COMBINED AT	C300	1235.	12.17	213.	149.	110.	.87
+	ROUTED TO	R300	1189.	12.23	212.	149.	109.	.87
+	HYDROGRAPH AT	305A	394.	12.13	41.	11.	4.	.32
+	2 COMBINED AT	C305	1534.	12.20	249.	158.	113.	1.19
+	ROUTED TO	R305	1520.	12.23	249.	158.	113.	1.19
+	HYDROGRAPH AT	320B1	659.	12.13	66.	19.	7.	.45
+	DIVERSION TO	B320B1	364.	11.93	16.	5.	2.	.45
+	HYDROGRAPH AT	D320B1	659.	12.13	54.	14.	5.	.45
+	HYDROGRAPH AT	T320B1	364.	11.93	16.	5.	2.	.45
+	ROUTED TO	S320B1	4.	12.00	3.	3.	2.	.45
+	3 COMBINED AT	C320B1	2042.	12.20	303.	174.	118.	1.64
	HYDROGRAPH AT							

+		350	1315.	12.20	112.	29.	11.	1.00
	DIVERSION TO	SF350	658.	12.20	56.	15.	5.	1.00
+	HYDROGRAPH AT	D350	658.	12.20	56.	15.	5.	1.00
+	ROUTED TO	R350	593.	12.40	56.	15.	5.	1.00
+	HYDROGRAPH AT	310	381.	12.33	50.	13.	5.	.54
+	2 COMBINED AT	C310	950.	12.37	106.	27.	10.	1.04
+	ROUTED TO	R310	865.	12.67	106.	27.	10.	1.04
+	HYDROGRAPH AT	305B	333.	12.33	40.	10.	4.	.39
+	ROUTED TO	R305B	317.	12.43	40.	10.	4.	.39
+	HYDROGRAPH AT	320B2	251.	12.13	27.	7.	3.	.22
+	DIVERSION TO	B320B2	177.	12.00	6.	2.	1.	.22
+	HYDROGRAPH AT	D320B2	251.	12.13	22.	6.	2.	.22
+	HYDROGRAPH AT	T320B2	177.	12.00	6.	2.	1.	.22
+	ROUTED TO	S320B2	1.	12.03	1.	1.	1.	.22
+	4 COMBINED AT	C320B2	1150.	12.63	167.	43.	16.	1.65
+	ROUTED TO	R320B2	1144.	12.67	167.	43.	16.	1.65
+	HYDROGRAPH AT	340B	497.	12.07	41.	12.	4.	.29
+	DIVERSION TO	BS340B	497.	12.07	29.	8.	3.	.29
+	HYDROGRAPH AT	D340B	286.	12.20	15.	4.	2.	.29
+	HYDROGRAPH AT	RT340B	497.	12.07	29.	8.	3.	.29
+	ROUTED TO	S340B	5.	12.20	5.	4.	3.	.29
+	3 COMBINED AT	C340B	1166.	12.67	185.	50.	20.	1.94
+	DIVERSION TO	BS340	966.	12.67	113.	28.	10.	1.94
+	HYDROGRAPH AT	DD340B	200.	12.10	71.	22.	10.	1.94
+	HYDROGRAPH AT	RT340	966.	12.67	113.	28.	10.	1.94
+	ROUTED TO	SS340B	48.	13.40	41.	24.	10.	1.94
+	2 COMBINED AT	CD340B	248.	13.40	109.	46.	20.	1.94
+	HYDROGRAPH AT	RT350	658.	12.20	56.	15.	5.	1.00
+	ROUTED TO	RR350	570.	12.43	56.	15.	5.	1.00
+	HYDROGRAPH AT	355	546.	12.33	75.	19.	7.	.68
	2 COMBINED AT							

+	C355	1061.	12.40	130.	34.	12.	1.17
DIVERSION TO +	BS355	611.	12.40	40.	10.	4.	1.17
HYDROGRAPH AT +	D355	450.	12.13	90.	24.	9.	1.17
HYDROGRAPH AT +	RT355	611.	12.40	40.	10.	4.	1.17
ROUTED TO +	S355	40.	12.77	26.	10.	4.	1.17
2 COMBINED AT +	CC355	490.	12.77	115.	34.	12.	1.17
ROUTED TO +	R355	478.	12.77	115.	34.	12.	1.17
2 COMBINED AT +	CC340B	707.	12.77	220.	78.	31.	3.11
ROUTED TO +	R340B	703.	12.80	219.	78.	31.	3.11
HYDROGRAPH AT +	340A2	72.	12.03	8.	3.	1.	.04
DIVERSION TO +	B340A2	64.	11.97	4.	1.	0.	.04
HYDROGRAPH AT +	D340A2	72.	12.03	5.	1.	1.	.04
HYDROGRAPH AT +	T340A2	64.	11.97	4.	1.	0.	.04
ROUTED TO +	S340A2	1.	12.03	1.	1.	0.	.04
3 COMBINED AT +	C340A2	710.	12.80	225.	80.	32.	3.15
ROUTED TO +	R340A2	703.	12.93	225.	80.	32.	3.15
2 COMBINED AT +	CC320B	2211.	12.23	516.	250.	147.	4.79
ROUTED TO +	R320B	2204.	12.23	515.	250.	147.	4.79
HYDROGRAPH AT +	320A	315.	12.13	40.	12.	4.	.27
DIVERSION TO +	BS320A	315.	12.13	22.	6.	2.	.27
HYDROGRAPH AT +	D320A	267.	12.27	22.	6.	2.	.27
HYDROGRAPH AT +	RT320A	315.	12.13	22.	6.	2.	.27
ROUTED TO +	S320A	4.	12.27	3.	3.	2.	.27
3 COMBINED AT +	C320	2378.	12.30	538.	258.	151.	5.06
HYDROGRAPH AT +	340A1	1254.	12.17	154.	46.	17.	1.09
DIVERSION TO +	B340A1	1254.	12.17	154.	46.	17.	1.09
HYDROGRAPH AT +	D340A1	0.	.00	0.	0.	0.	1.09
HYDROGRAPH AT +	T340A1	1254.	12.17	154.	46.	17.	1.09
ROUTED TO +	S340A1	18.	15.30	18.	16.	12.	1.09
2 COMBINED AT +	C340A1	18.	15.30	18.	16.	12.	1.09

2 COMBINED AT

+	C340	2378.	12.30	552.	273.	161.	6.15
HYDROGRAPH AT	360	840.	12.20	122.	36.	13.	.88
+ DIVERSION TO	BS360	840.	12.20	93.	25.	9.	.88
+ HYDROGRAPH AT	D360	366.	12.67	40.	12.	4.	.88
+ HYDROGRAPH AT	RT360	840.	12.20	93.	25.	9.	.88
+ ROUTED TO	S360	15.	12.67	15.	12.	8.	.88
+ 3 COMBINED AT	C360	2378.	12.30	596.	294.	172.	7.03
+ HYDROGRAPH AT	380A	322.	12.27	33.	10.	4.	.26
+ 2 COMBINED AT	C380A	2639.	12.30	617.	299.	173.	7.29
+ HYDROGRAPH AT	400A	56.	12.20	4.	1.	0.	.05
+ 2 COMBINED AT	C400A	2676.	12.30	621.	300.	173.	7.34
+ HYDROGRAPH AT	370	817.	12.23	83.	22.	8.	.67
+ ROUTED TO	S370	374.	12.53	83.	22.	8.	.67
+ DIVERSION TO	B370W	335.	12.53	74.	20.	7.	.67
+ HYDROGRAPH AT	D370	39.	12.53	8.	2.	1.	.67
+ ROUTED TO	R370S	38.	12.90	8.	2.	1.	.67
+ HYDROGRAPH AT	380B1	329.	12.20	47.	14.	5.	.37
+ DIVERSION TO	B380B1	329.	12.20	19.	5.	2.	.37
+ HYDROGRAPH AT	D380B1	312.	12.27	31.	8.	3.	.37
+ HYDROGRAPH AT	T380B1	329.	12.20	19.	5.	2:	.37
+ ROUTED TO	S380B1	3.	12.27	3.	3.	2.	.37
+ 3 COMBINED AT	C380B1	315.	12.27	42.	13.	6.	1.04
+ ROUTED TO	R380B1	287.	12.43	42.	13.	6.	1.04
+ HYDROGRAPH AT	400B1	440.	12.13	45.	13.	5.	.38
+ DIVERSION TO	B400B1	239.	11.97	10.	3.	1.	.38
+ HYDROGRAPH AT	D400B1	440.	12.13	37.	10.	3.	.38
+ HYDROGRAPH AT	T400B1	239.	11.97	10.	3.	1.	.38
+ ROUTED TO	S400B1	2.	12.03	2.	2.	1.	.38
+ 2 COMBINED AT	C400B1	442.	12.13	39.	11.	5.	.38
+ 3 COMBINED AT	CC400B	2957.	12.30	684.	319.	180.	8.76
HYDROGRAPH AT							

+	420A2	31.	12.07	2.	1.	0.	.02
2 COMBINED AT	C400A2	2967.	12.30	685.	319.	180.	8.78
HYDROGRAPH AT +	T370W	335.	12.53	74.	20.	7.	.67
ROUTED TO +	R370W	331.	12.73	74.	20.	7.	.67
HYDROGRAPH AT +	395A	191.	12.13	25.	7.	2.	.19
ROUTED TO +	R390C1	189.	12.20	25.	7.	2.	.19
HYDROGRAPH AT +	395B	6.	12.03	1.	0.	0.	.00
ROUTED TO +	R390C2	5.	12.23	1.	0.	0.	.00
HYDROGRAPH AT +	390C	226.	12.07	18.	5.	2.	.12
3 COMBINED AT +	CP390C	379.	12.10	44.	12.	4.	.31
DIVERSION TO +	TO390B	275.	12.10	22.	6.	2.	.31
HYDROGRAPH AT +	TOC-H	104.	12.10	21.	7.	2.	.31
2 COMBINED AT +	C370	383.	12.67	95.	26.	10.	1.30
ROUTED TO +	R390S	382.	12.70	95.	26.	10.	1.30
HYDROGRAPH AT +	400B3	39.	12.03	3.	1.	0.	.02
DIVERSION TO +	B400B3	39.	12.03	3.	1.	0.	.02
HYDROGRAPH AT +	D400B3	0.	.00	0.	0.	0.	.02
HYDROGRAPH AT +	T400B3	39.	12.03	3.	1.	0.	.02
ROUTED TO +	S400B3	1.	11.67	1.	1.	0.	.02
2 COMBINED AT +	C400B3	1.	11.67	1.	1.	0.	.02
2 COMBINED AT +	C390S	383.	12.70	96.	27.	10.	1.32
HYDROGRAPH AT +	380B3	171.	12.10	16.	5.	2.	.12
DIVERSION TO +	B380B3	170.	12.07	7.	2.	1.	.12
HYDROGRAPH AT +	D380B3	162.	12.13	10.	3.	1.	.12
HYDROGRAPH AT +	T380B3	170.	12.07	7.	2.	1.	.12
ROUTED TO +	S380B3	2.	12.13	2.	1.	1.	.12
2 COMBINED AT +	C380B3	164.	12.13	11.	4.	2.	.12
DIVERSION TO +	380B3c	44.	12.13	3.	1.	0.	.12
HYDROGRAPH AT +	D380B3	120.	12.13	8.	3.	1.	.12
DIVERSION TO +	380B3a	62.	12.13	4.	1.	1.	.12
HYDROGRAPH AT							

+	380B3b	57.	12.13	4.	1.	1.	.12
2 COMBINED AT +	C380BB	390.	12.70	99.	28.	10.	1.45
DIVERSION TO +	B38B3b	320.	12.70	65.	16.	6.	1.45
HYDROGRAPH AT +	D380B	70.	11.90	34.	12.	4.	1.45
HYDROGRAPH AT +	RT380B	320.	12.70	65.	16.	6.	1.45
ROUTED TO +	S380B	61.	13.63	25.	15.	6.	1.45
2 COMBINED AT +	CC380B	131.	13.63	56.	26.	10.	1.45
ROUTED TO +	R38B3b	131.	13.67	56.	26.	10.	1.45
HYDROGRAPH AT +	T38B3a	62.	12.13	4.	1.	1.	.12
ROUTED TO +	R38B3a	50.	12.23	4.	1.	1.	.12
HYDROGRAPH AT +	T38B3c	44.	12.13	3.	1.	0.	.12
3 COMBINED AT +	C38B3c	156.	12.23	63.	28.	11.	1.45
ROUTED TO +	R380B3	151.	12.33	63.	28.	11.	1.45
HYDROGRAPH AT +	380B2	140.	12.07	12.	3.	1.	.10
2 COMBINED AT +	C380B2	208.	12.27	74.	31.	13.	1.54
ROUTED TO +	R380B2	205.	12.40	74.	31.	13.	1.54
HYDROGRAPH AT +	400B2	205.	12.13	19.	5.	2.	.19
2 COMBINED AT +	C400B2	394.	12.17	91.	36.	14.	1.74
ROUTED TO +	R400B2	377.	12.27	91.	36.	14.	1.74
HYDROGRAPH AT +	420A1	759.	12.13	74.	21.	8.	.57
DIVERSION TO +	B420A1	477.	11.97	20.	6.	2.	.57
HYDROGRAPH AT +	D420A1	759.	12.13	60.	16.	6.	.57
HYDROGRAPH AT +	T420A1	477.	11.97	20.	6.	2.	.57
ROUTED TO +	S420A1	4.	12.03	3.	3.	2.	.57
4 COMBINED AT +	C420A	3728.	12.23	812.	364.	197.	11.09
HYDROGRAPH AT +	R390B	275.	12.10	22.	6.	2.	.31
ROUTED TO +	R390B1	277.	12.10	22.	6.	2.	.31
HYDROGRAPH AT +	385C	647.	12.13	72.	20.	7.	.50
HYDROGRAPH AT +	385B	103.	12.07	10.	3.	1.	.08
HYDROGRAPH AT +	385A	23.	12.07	2.	1.	0.	.02
HYDROGRAPH AT							

+	415B	442.	12.07	43.	13.	5.	.28
+ 4 COMBINED AT	CP415B	1205.	12.10	127.	36.	13.	.87
+ DIVERSION TO	BS415B	1055.	12.10	79.	20.	7.	.87
+ HYDROGRAPH AT	D415B	150.	11.70	48.	16.	6.	.87
+ HYDROGRAPH AT	RT415B	1055.	12.10	79.	20.	7.	.87
+ ROUTED TO	S415B	55.	12.70	42.	20.	7.	.87
+ 2 COMBINED AT	CC415B	205.	12.70	85.	34.	13.	.87
+ ROUTED TO	R390A1	205.	12.73	85.	34.	13.	.87
+ HYDROGRAPH AT	390A	33.	12.07	3.	1.	0.	.02
+ 2 COMBINED AT	CP390A	210.	12.47	88.	35.	13.	.90
+ ROUTED TO	R390B2	210.	12.50	88.	35.	13.	.90
+ HYDROGRAPH AT	390B	139.	12.07	13.	4.	1.	.10
+ 3 COMBINED AT	CP390B	613.	12.10	122.	44.	16.	1.31
+ ROUTED TO	S390B	519.	12.23	122.	44.	16.	1.31
+ HYDROGRAPH AT	420B05	62.	12.07	5.	2.	1.	.04
+ 2 COMBINED AT	CPSD05	559.	12.20	127.	45.	17.	1.35
+ HYDROGRAPH AT	420B10	26.	12.10	3.	1.	0.	.03
+ 2 COMBINED AT	CPSD10	581.	12.20	130.	46.	17.	1.37
+ HYDROGRAPH AT	420B15	10.	12.10	1.	0.	0.	.01
+ 2 COMBINED AT	CPSD15	589.	12.20	131.	46.	17.	1.39
+ HYDROGRAPH AT	420B20	12.	12.10	2.	1.	0.	.01
+ 2 COMBINED AT	CPSD20	600.	12.20	133.	47.	18.	1.40
+ HYDROGRAPH AT	420B25	37.	12.37	10.	3.	1.	.08
+ ROUTED TO	SFIRES	27.	12.80	10.	3.	1.	.08
+ 2 COMBINED AT	CPSD25	615.	12.20	143.	49.	19.	1.48
+ HYDROGRAPH AT	420B30	46.	12.13	7.	2.	1.	.05
+ 2 COMBINED AT	CPSD30	658.	12.20	149.	51.	19.	1.54
+ HYDROGRAPH AT	420B35	40.	12.07	4.	1.	0.	.04
+ ROUTED TO	SCHRCH	42.	12.17	4.	1.	0.	.04
+ 2 COMBINED AT	CPSD35	694.	12.17	153.	52.	20.	1.57
HYDROGRAPH AT							

+	420B40	6.	12.07	1.	0.	0.	.00
+ 2 COMBINED AT	CPSD40	698.	12.17	154.	52.	20.	1.58
+ HYDROGRAPH AT	420B45	7.	12.07	1.	0.	0.	.01
+ 2 COMBINED AT	CPSD45	704.	12.17	154.	53.	20.	1.59
+ DIVERSION TO	MCDB	302.	12.17	24.	6.	2.	1.59
+ HYDROGRAPH AT	TOLSCH	402.	12.17	131.	47.	18.	1.59
+ HYDROGRAPH AT	440	184.	12.03	12.	3.	1.	.08
+ ROUTED TO	R70	181.	12.07	12.	3.	1.	.08
+ HYDROGRAPH AT	441	16.	12.03	1.	0.	0.	.01
+ 2 COMBINED AT	C108	197.	12.07	14.	4.	1.	.09
+ DIVERSION TO	SPLIT	98.	12.07	7.	2.	1.	.09
+ HYDROGRAPH AT	D4	98.	12.07	7.	2.	1.	.09
+ ROUTED TO	R108	92.	12.13	7.	2.	1.	.09
+ HYDROGRAPH AT	442	105.	12.10	9.	2.	1.	.10
+ 2 COMBINED AT	C67	195.	12.10	16.	4.	2.	.19
+ DIVERSION TO	BASIN4	121.	12.10	6.	2.	1.	.19
+ HYDROGRAPH AT	D6	74.	12.10	10.	3.	1.	.19
+ HYDROGRAPH AT	RTD6	121.	12.10	6.	2.	1.	.19
+ ROUTED TO	SD6	1.	12.47	1.	1.	0.	.19
+ 2 COMBINED AT	CD6	74.	12.10	10.	3.	1.	.19
+ HYDROGRAPH AT	443	151.	12.07	15.	4.	1.	.08
+ DIVERSION TO	WSH66	78.	11.87	12.	3.	1.	.08
+ HYDROGRAPH AT	D66	73.	12.07	3.	1.	0.	.08
+ ROUTED TO	R113	71.	12.07	3.	1.	0.	.08
+ 2 COMBINED AT	C114	144.	12.07	13.	4.	2.	.27
+ HYDROGRAPH AT	444	83.	12.03	5.	1.	0.	.04
+ ROUTED TO	R58	79.	12.07	5.	1.	0.	.04
+ HYDROGRAPH AT	445	307.	12.03	19.	5.	2.	.19
+ 2 COMBINED AT	C107	382.	12.03	23.	6.	2.	.23
+ ROUTED TO	R107	382.	12.07	23.	6.	2.	.23
HYDROGRAPH AT							

+		RTB2	98.	12.07	7.	2.	1.	.09
	ROUTED TO							
+		RSPLIT	98.	12.07	7.	2.	1.	.09
	HYDROGRAPH AT							
+		446	66.	12.03	6.	2.	1.	.04
	3 COMBINED AT							
+		C109	545.	12.07	36.	10.	3.	.27
	DIVERSION TO							
+		WSH404	35.	11.70	8.	2.	1.	.27
	HYDROGRAPH AT							
+		D5	510.	12.07	28.	7.	3.	.27
	ROUTED TO							
+		R109	493.	12.10	28.	7.	3.	.27
	HYDROGRAPH AT							
+		447	141.	12.07	12.	4.	1.	.09
	HYDROGRAPH AT							
+		RT404	35.	11.70	8.	2.	1.	.27
	ROUTED TO							
+		R404	35.	11.83	8.	2.	1.	.27
	3 COMBINED AT							
+		C110	666.	12.07	48.	13.	5.	.36
	ROUTED TO							
+		R110	663.	12.10	48.	13.	5.	.36
	2 COMBINED AT							
+		C115	805.	12.07	61.	17.	7.	.63
	ROUTED TO							
+		R115	799.	12.10	61.	17.	7.	.63
	HYDROGRAPH AT							
+		448	89.	12.03	6.	2.	1.	.05
	HYDROGRAPH AT							
+		449	81.	12.03	5.	1.	0.	.05
	2 COMBINED AT							
+		C6364	170.	12.03	11.	3.	1.	.09
	ROUTED TO							
+		R6364	145.	12.17	11.	3.	1.	.09
	HYDROGRAPH AT							
+		450	63.	12.20	7.	2.	1.	.07
	HYDROGRAPH AT							
+		451	18.	12.17	2.	1.	0.	.03
	2 COMBINED AT							
+		C451	80.	12.20	9.	2.	1.	.09
	HYDROGRAPH AT							
+		RT66	78.	11.87	12.	3.	1.	.08
	HYDROGRAPH AT							
+		452	63.	12.03	5.	1.	0.	.04
	2 COMBINED AT							
+		C6465	141.	12.03	17.	4.	2.	.04
	ROUTED TO							
+		R6566	137.	12.10	17.	4.	2.	.04
	3 COMBINED AT							
+		C116	357.	12.17	36.	10.	3.	.23
	ROUTED TO							
+		BASIN5	159.	12.47	36.	10.	3.	.23
	ROUTED TO							
+		R116	157.	12.53	36.	10.	3.	.23
	HYDROGRAPH AT							
+		453	63.	12.10	7.	2.	1.	.06
	2 COMBINED AT							
+		C117	177.	12.47	43.	12.	4.	.29
	2 COMBINED AT							

+		C118	892.	12.10	104.	29.	11.	.92
	ROUTED TO							
+		R118	887.	12.13	104.	29.	11.	.92
	DIVERSION TO							
+		BASIN6	248.	12.13	7.	2.	1.	.92
	HYDROGRAPH AT							
+		D7	639.	12.13	97.	27.	10.	.92
	HYDROGRAPH AT							
+		RTD7	248.	12.13	7.	2.	1.	.92
	ROUTED TO							
+		SD7	1.	12.67	1.	1.	1.	.92
	2 COMBINED AT							
+		CD7	640.	12.13	97.	28.	11.	.92
	HYDROGRAPH AT							
+		454	162.	12.13	21.	6.	2.	.18
	2 COMBINED AT							
+		C454	801.	12.13	118.	34.	13.	1.10
	ROUTED TO							
+		R454	793.	12.23	118.	34.	13.	1.10
	HYDROGRAPH AT							
+		415A	267.	12.17	32.	9.	3.	.28
	3 COMBINED AT							
+		CP415A	1436.	12.20	275.	88.	33.	2.97
	HYDROGRAPH AT							
+		RMCDB	302.	12.17	24.	6.	2.	1.59
	ROUTED TO							
+		SMCDB	127.	12.53	24.	6.	2.	1.59
	2 COMBINED AT							
+		CPLSCH	1538.	12.20	298.	93.	35.	2.97
	ROUTED TO							
+		R415A	1526.	12.27	298.	93.	35.	2.97
	HYDROGRAPH AT							
+		455	1418.	12.13	150.	45.	16.	1.11
	DIVERSION TO							
+		BS455	1418.	12.13	139.	37.	13.	1.11
	HYDROGRAPH AT							
+		D455	145.	12.80	24.	8.	3.	1.11
	HYDROGRAPH AT							
+		RT455	1418.	12.13	139.	37.	13.	1.11
	ROUTED TO							
+		S455	23.	12.80	22.	18.	11.	1.11
	2 COMBINED AT							
+		C455	169.	12.80	46.	26.	14.	1.11
	3 COMBINED AT							
+		CC455	5112.	12.23	1089.	460.	237.	15.16
	ROUTED TO							
+		S440	295.	22.83	294.	267.	172.	15.16
	ROUTED TO							
+		R455	295.	23.57	294.	267.	170.	15.16
	HYDROGRAPH AT							
+		480	1102.	12.10	100.	31.	11.	.73
	DIVERSION TO							
+		BS480	487.	11.90	27.	8.	3.	.73
	HYDROGRAPH AT							
+		D480	1102.	12.10	83.	23.	8.	.73
	HYDROGRAPH AT							
+		RT480	487.	11.90	27.	8.	3.	.73
	ROUTED TO							
+		S480	5.	11.97	5.	4.	3.	.73
	2 COMBINED AT							

+		C480	1107.	12.10	88.	27.	11.	.73
	2 COMBINED AT	CC480	1107.	12.10	357.	317.	206.	.73
	ROUTED TO							
+		R480	907.	12.33	357.	317.	205.	.73
	HYDROGRAPH AT							
+		456	483.	12.07	37.	10.	4.	.26
	DIVERSION TO							
+		BASIN1	193.	12.07	8.	2.	1.	.26
	HYDROGRAPH AT							
+		D1	290.	12.07	29.	8.	3.	.26
	DIVERSION TO							
+		WA30	59.	12.07	10.	3.	1.	.26
	HYDROGRAPH AT							
+		CD2	231.	12.07	19.	5.	2.	.26
	ROUTED TO							
+		R456	218.	12.13	19.	5.	2.	.26
	HYDROGRAPH AT							
+		457	273.	12.07	21.	6.	2.	.19
	2 COMBINED AT							
+		C101	480.	12.10	40.	10.	4.	.45
	DIVERSION TO							
+		BASIN2	177.	12.10	8.	2.	1.	.45
	HYDROGRAPH AT							
+		D3	303.	12.10	32.	8.	3.	.45
	HYDROGRAPH AT							
+		RTD3	177.	12.10	8.	2.	1.	.45
	ROUTED TO							
		SD3	1.	12.40	1.	1.	1.	.45
	2 COMBINED AT							
+		CD3	304.	12.10	33.	9.	4.	.45
	ROUTED TO							
+		R101	302.	12.10	33.	9.	4.	.45
	HYDROGRAPH AT							
+		458	366.	12.03	26.	7.	2.	.19
	2 COMBINED AT							
+		C103	655.	12.07	59.	16.	6.	.64
	ROUTED TO							
+		R103	651.	12.07	59.	16.	6.	.64
	HYDROGRAPH AT							
+		RT30	59.	12.07	10.	3.	1.	.26
	ROUTED TO							
+		R30	58.	12.10	10.	3.	1.	.26
	HYDROGRAPH AT							
+		RTB1	193.	12.07	8.	2.	1.	.26
	ROUTED TO							
+		B1	35.	12.20	8.	2.	1.	.26
	ROUTED TO							
+		RB1	35.	12.27	8.	2.	1.	.26
	2 COMBINED AT							
+		CDIV	87.	12.20	18.	5.	2.	.12
	HYDROGRAPH AT							
+		459	45.	12.03	3.	1.	0.	.03
	2 COMBINED AT							
+		C52	117.	12.10	21.	6.	2.	.15
	ROUTED TO							
+		R52	116.	12.17	21.	6.	2.	.15
	HYDROGRAPH AT							
+		460	221.	12.07	20.	6.	2.	.14
	2 COMBINED AT							

+		C102	323.	12.07	40.	12.	4.	.29
	ROUTED TO	BASIN3	71.	12.63	40.	12.	4.	.29
+	ROUTED TO	R3	71.	12.77	40.	12.	4.	.29
+	HYDROGRAPH AT	461	165.	12.10	17.	5.	2.	.12
+	2 COMBINED AT	C104	220.	12.10	57.	17.	6.	.41
+	2 COMBINED AT	C106	866.	12.07	115.	33.	12.	1.05
+	ROUTED TO	R106	828.	12.13	115.	33.	12.	1.05
+	HYDROGRAPH AT	462	557.	12.07	42.	12.	4.	.30
+	2 COMBINED AT	C56	1306.	12.10	156.	44.	16.	1.35
+	2 COMBINED AT	C462	1633.	12.30	398.	340.	217.	2.09
+	ROUTED TO	R462	1601.	12.33	397.	340.	217.	2.09
+	ROUTED TO	RR462	1563.	12.40	396.	340.	216.	2.09
+	HYDROGRAPH AT	500	1126.	12.27	128.	35.	12.	.93
+	2 COMBINED AT	C500	2472.	12.33	506.	366.	226.	3.02

*** NORMAL END OF HEC-1 ***

```
1****************************************                                    ***************************
 *                                      *                                    *
 *   FLOOD HYDROGRAPH PACKAGE  (HEC-1)  *                                    *   U.S. ARMY CORPS OF ENG
 *             JUN   1998               *                                    *   HYDROLOGIC ENGINEERING
 *          VERSION 4.1                 *                                    *        609 SECOND STREE
 *                                      *                                    *      DAVIS, CALIFORNIA 9
 *  RUN DATE   07APR06  TIME  14:16:42  *                                    *          (916) 756-1104
 *                                      *                                    *
 ****************************************                                    ***************************

                                        X     X  XXXXXXX   XXXXX           X
                                        X     X  X        X    X         XX
                                        X     X  X        X               X
                                        XXXXXXX  XXXX     X        XXXXX  X
                                        X     X  X        X               X
                                        X     X  X        X    X          X
                                        X     X  XXXXXXX   XXXXX         XXX

THIS PROGRAM REPLACES ALL PREVIOUS VERSIONS OF HEC-1 KNOWN AS HEC1 (JAN 73), HEC1GS, HEC1DB, AND HEC1KW.

THE DEFINITIONS OF VARIABLES -RTIMP- AND -RTIOR- HAVE CHANGED FROM THOSE USED WITH THE 1973-STYLE INPUT STRU
THE DEFINITION OF -AMSKK- ON RM-CARD WAS CHANGED WITH REVISIONS DATED 28 SEP 81. THIS IS THE FORTRAN77 VERSI
NEW OPTIONS: DAMBREAK OUTFLOW SUBMERGENCE , SINGLE EVENT DAMAGE CALCULATION, DSS:WRITE STAGE FREQUENCY,
DSS:READ TIME SERIES AT DESIRED CALCULATION INTERVAL   LOSS RATE:GREEN AND AMPT INFILTRATION
KINEMATIC WAVE: NEW FINITE DIFFERENCE ALGORITHM

1                                                HEC-1 INPUT                                                PAGE  1

  LINE          ID.......1.......2.......3.......4.......5.......6.......7.......8.......9......10

    1           ID   McDowell Road Basin and Storm Drain Design
    2           ID   This model assumes that the Oak Street detention basin is installed,
    3           ID   and all flows pass through the Thunder Mountain detention basin.
    4           ID
    5           ID   The Spook Hill ADMP model was uded as a base for this model
    6           ID   Return Period = 100 Years, Rainfall Duration = 24 Hours
    7           ID
    8           ID   Emergency spillway design for basin.  Assume 48-inch diameter outlet is
    9           ID   plugged.  Rating is just through emergency spillway.
   10           ID
   11           ID
   12           ID
   13           ID   METHODOLOGY
   14           ID   THE US CORPS OF ENGINEERS FLOW HYDROGRAPH PACKAGE HEC-1 DATED JUNE 1998 V4.1
   15           ID   SCS TYPE II RAINFALL DISTRIBUTION
   16           ID   CLARK UNIT HYDROGRAPH
   17           ID   GREEN AND AMPT INFILTRATION EQUATION USED FOR CALCULATING LOSSES
   18           ID   NORMAL DEPTH STORAGE CHANNEL ROUTING
                *
                *DIAGRAM
   19           IT       2                    2000
   20           IO       5
   21           IN      15
   22           JD    3.81    0.01
   23           PC    .000    .002    .005    .008    .011    .014    .017    .020    .023    .026
   24           PC    .029    .032    .035    .038    .041    .044    .048    .052    .056    .060
   25           PC    .064    .068    .072    .076    .080    .085    .090    .095    .100    .105
   26           PC    .110    .115    .120    .126    .133    .140    .147    .155    .163    .172
   27           PC    .181    .191    .203    .218    .236    .257    .283    .387    .663    .707
   28           PC    .735    .758    .776    .791    .804    .815    .825    .834    .842    .849
   29           PC    .856    .863    .869    .875    .881    .887    .893    .898    .903    .908
   30           PC    .913    .918    .922    .926    .930    .934    .938    .942    .946    .950
   31           PC    .953    .956    .959    .962    .965    .968    .971    .974    .977    .980
   32           PC    .983    .986    .989    .992    .995    .998   1.000
   33           JD   3.787    1.00
   34           JD   3.677    5.80
   35           JD   3.574   10.66
   36           JD   3.539   13.70
   37           JD   3.467   20.00
   38           JD   3.315   50.00
                *
                * DDM   ***** Updated *****

   39           KK      10
   40           KM   SUB-BASIN 10
   41           KM   24-HOUR SCS TYPE II RAINFALL WAS USED TO FIND TC & R FOR THIS BASIN
```

```
 42          KM   THIS BASIN USED RAINFALL REDUCTION FACTOR OF  .996
 43          KM     L = 2.00  Kb = .044  Adj. Slope =  165.0
 44          BA    .690
 45          LG    .350    .310   7.600    .090  16.000
 46          UC    .421    .305
 47          UA       0       3       5       8      12      20      43      75      90      96
 48          UA     100
             *
             * DDM   ***** Preserved *****
1                                     HEC-1 INPUT                                          PAGE  2

LINE         ID.......1.......2.......3.......4.......5.......6.......7.......8.......9......10

 49          KK     R10
 50          KM   ROUTING OF FLOW FROM SUB-BASIN 10 TO R12
 51          RS       4    FLOW      -1
 52          RC    .045     .03    .045    8700    .021
 53          RX       0       1       2      17      27      42      43      44
 54          RY       5       5       5       0       0       5       5       5
             * DDM   ***** Preserved *****

 55          KK     R12
 56          KM   ROUTING OF FLOW FROM R12 TO SUB-BASIN 20
 57          RS       7    FLOW      -1
 58          RC    .045     .03    .045    4500     .01
 59          RX       0       1      45    52.5    72.5      80     124     125
 60          RY       4     2.5     2.5       0       0     2.5     2.5       4
             * DDM   ***** Updated *****

 61          KK      20
 62          KM   SUB-BASIN 20
 63          KM   24-HOUR SCS TYPE II RAINFALL WAS USED TO FIND TC & R FOR THIS BASIN
 64          KM   THIS BASIN USED RAINFALL REDUCTION FACTOR OF  .993
 65          KM     L = 2.50  Kb = .040  Adj. Slope =   88.0
 66          BA   1.167
 67          LG    .310    .290   5.800    .220  11.000
 68          UC    .629    .422
 69          UA       0       5      16      30      65      77      84      90      94      97
 70          UA     100
             * DDM   ***** Preserved *****

 71          KK     D20
 72          KM        100-YEAR 2-HOUR ONSITE RETENTION BASIN
 73          KM        MAXIMUM VOLUME DIVERSION = 47.8 acre-feet
 74          DT    BS20    47.8
 75          DI       0   10000
 76          DQ       0   10000
             * DDM   ***** Preserved *****

 77          KK    RT20
 78          KM   RETRIEVE FLOW FROM DIVERSION INTO ONLINE BASIN
 79          DR    BS20
             * DDM   ***** Preserved *****

 80          KK     S20
 81          KM   RETRIEVE FLOW INTO FICTICIOUS BASIN AND BLEED OFF WITHIN 36 HOURS.
 82          KM   BLEEDOFF FLOW = 17 CFS
 83          RS       1    STOR       0
 84          SV       0     .01    47.8     70
 85          SQ       0     0.5    17.0     50
             * DDM   ***** Preserved *****
1                                     HEC-1 INPUT                                          PAGE  3

LINE         ID.......1.......2.......3.......4.......5.......6.......7.......8.......9......10

 86          KK     C20
 87          KM   HYDROGRAPH COMBINATION
 88          HC       3
             * DDM   ***** Preserved *****

 89          KK     R20
 90          KM        ROUTE FLOW THROUGH BULLDOG FLOODWAY FROM APACHE JUNCTION FRS
 91          RS       1    FLOW      -1
 92          RC    .016    .016    .016     990    .004
 93          RX       0       5       7    14.5    34.5      42      44      50
 94          RY       4       2       2       0       0       2       2       4
             * DDM   ***** Updated *****

 95          KK      40
 96          KM   SUB-BASIN 40
 97          KM   24-HOUR SCS TYPE II RAINFALL WAS USED TO FIND TC & R FOR THIS BASIN
 98          KM   THIS BASIN USED RAINFALL REDUCTION FACTOR OF  .987
```

```
 99          KM     L = 3.08  Kb = .036  Adj. Slope =  189.0
100          BA   2.227
101          LG    .320    .300   4.900    .310  11.000
102          UC    .492    .262
103          UA      0       3       5       8      12      20      43      75      90      96
104          UA     100
             * DDM   ***** Preserved *****

105          KK     D40
106          KM        100-YEAR 2-HOUR ONSITE RETENTION BASIN
107          KM        MAXIMUM VOLUME DIVERSION = 39.1 acre-feet
108          DT    BS40    39.1
109          DI       0   10000
110          DQ       0   10000
             * DDM   ***** Preserved *****

111          KK    RT40
112          KM   RETRIEVE FLOW FROM DIVERSION INTO ONLINE BASIN
113          DR    BS40
             * DDM   ***** Preserved *****

114          KK     S40
115          KM   RETRIEVE FLOW INTO FICTICIOUS BASIN AND BLEED OFF WITHIN 36 HOURS.
116          KM   BLEEDOFF FLOW = 14 CFS
117          RS       1    STOR       0
118          SV       0     .01    39.1     60
119          SQ       0     0.5    14.0     40
             * DDM   ***** Preserved *****

120          KK     C40
121          KM   HYDROGRAPH COMBINATION
122          HC       3
             * DDM   ***** Updated *****
```



```
LINE         ID.......1.......2.......3.......4.......5.......6.......7.......8.......9......10


123          KK      60
124          KM   SUB-BASIN 60
125          KM   24-HOUR SCS TYPE II RAINFALL WAS USED TO FIND TC & R FOR THIS BASIN
126          KM   THIS BASIN USED RAINFALL REDUCTION FACTOR OF  .989
127          KM     L = 4.19  Kb = .038  Adj. Slope =  209.6
128          BA   1.751
129          LG    .320    .340   5.800    .190  10.000
130          UC    .592    .472
131          UA      0       3       5       8      12      20      43      75      90      96
132          UA     100
             *
             * DDM   ***** Preserved *****

133          KK     D60
134          KM        100-YEAR 2-HOUR ONSITE RETENTION BASIN
135          KM        MAXIMUM VOLUME DIVERSION = 4.60 acre-feet
136          DT    BS60     4.6
137          DI       0   10000
138          DQ       0   10000
             * DDM   ***** Preserved *****

139          KK    RT60
140          KM   RETRIEVE FLOW FROM DIVERSION INTO ONLINE BASIN
141          DR    BS60
             * DDM   ***** Preserved *****

142          KK    SB60
143          KM   RETRIEVE FLOW INTO FICTICIOUS BASIN AND BLEED OFF WITHIN 36 HOURS.
144          KM   BLEEDOFF FLOW = 2 CFS
145          RS       1    STOR       0
146          SV       0     .01     4.6     10
147          SQ       0     0.5     2.0     10
             * DDM   ***** Preserved *****

148          KK     C60
149          KM   HYDROGRAPH COMBINATION
150          HC       3
             *
             * DDM   ***** Preserved *****

151          KK     S60
152          KM   APACHE JUNCTION FRS AS-BUILT PLANS 12/19/88
153          KM   OUTLET PIPE=30"RCP; L=136.6'; INLET INV.=1783.5; OUTLET INV.=1783
154          KM   EMERGENCY SPILLWAY ELEV.=1799.77'; PRINCIPAL SPILLWAY ELEV.=1793.5'
155          KM   STORAGE VOLUME BELOW PRINCIPAL SPILLWAY FOR SEDIMENT = 100 ACRE-FEET
             *  ESE = 1799.77 ft; PSE = 1793.5 ft; Sediment Vol. = 130 Ac-Ft.
```

```
156          RS       1    STOR       0
157          SV       0    46.8     106     130   161.2   170.7   230.7   322.2     543   812.9
158          SV    1122  1470.1    1865
159          SQ       0    0.01    0.02    26.3    74.4    91.2    96.2   102.4   113.9    1650
160          SQ    7700   15200   26200
161          SE   791.4     793   794.1   794.5     795   795.1     796   797.1   799.4   801.7
162          SE     804   806.3   808.6
             * DDM   ***** Preserved *****
1                                          HEC-1 INPUT                                          PAGE  5

LINE         ID.......1.......2.......3.......4.......5.......6.......7.......8.......9......10


163          KK     R60
164          KM        ROUTE FLOW THROUGH BULLDOG FLOODWAY FROM APACHE JUNCTION FRS
165          RS       2    FLOW      -1
166          RC    .016    .016    .016    2850    .012
167          RX       0       1       2     2.1     5.6     5.7       6       7
168          RY     4.5     3.5     3.5       0       0     3.5     3.5     4.5
             * DDM   ***** Preserved *****

169          KK    RR60
170          KM   ROUTE FLOW FROM BULLDOG FLOODWAY TO SUB-BASIN 80
171          RS       3    FLOW      -1
172          RC    .016    .016    .016    3500    .005
173          RX       0       1       2     2.1     7.1     7.2       8       9
174          RY     4.5     3.5     3.5       0       0     3.5     3.5     4.5
             * DDM   ***** Updated *****

175          KK      80
176          KM   SUB-BASIN 80
177          KM   24-HOUR SCS TYPE II RAINFALL WAS USED TO FIND TC & R FOR THIS BASIN
178          KM   THIS BASIN USED RAINFALL REDUCTION FACTOR OF  .991
179          KM     L = 2.69  Kb = .039  Adj. Slope =  229.8
180          BA   1.493
181          LG    .320    .300   5.600    .220   7.000
182          UC    .429    .254
183          UA       0       5      16      30      65      77      84      90      94      97
184          UA     100
             * DDM   ***** Preserved *****

185          KK     D80
186          KM        100-YEAR 2-HOUR ONSITE RETENTION BASIN
187          KM        MAXIMUM VOLUME DIVERSION = 18.9 acre-feet
188          DT    BS80    18.9
189          DI       0   10000
190          DQ       0   10000
             * DDM   ***** Preserved *****

191          KK    RT80
192          KM   RETRIEVE FLOW FROM DIVERSION INTO ONLINE BASIN
193          DR    BS80
             * DDM   ***** Preserved *****

194          KK     S80
195          KM   RETRIEVE FLOW INTO FICTICIOUS BASIN AND BLEED OFF WITHIN 36 HOURS.
196          KM   BLEEDOFF FLOW =  7 CFS
197          RS       1    STOR       0
198          SV       0     .01    18.9      30
199          SQ       0     1.0     7.0      20
             * DDM   ***** Preserved *****
1                                          HEC-1 INPUT                                          PAGE  6

LINE         ID.......1.......2.......3.......4.......5.......6.......7.......8.......9......10


200          KK     C80
201          KM   HYDROGRAPH COMBINATION
202          HC       2
             * DDM   ***** Preserved *****

203          KK    CC80
204          KM   HYDROGRAPH COMBINATION FOR FLOW FROM APACHE JUNCTION FRS & SUB-BASIN 80
205          HC       2   1.493
             * DDM   ***** Preserved *****

206          KK     R80
207          KM   ROUTE FLOW FROM SUB-BASIN 80 TO SUB-BASIN 100
208          RS       2    FLOW      -1
209          RC    .025    .016    .025    1200    .003
210          RX       0       2       6     6.1    41.1    41.2    56.2    58.2
211          RY     5.5     4.5     4.5       0       0     4.5     4.5     5.5
             * DDM   ***** Updated *****
```

```
212          KK     100
213          KM   SUB-BASIN 100
214          KM   24-HOUR SCS TYPE II RAINFALL WAS USED TO FIND TC & R FOR THIS BASIN
215          KM   THIS BASIN USED RAINFALL REDUCTION FACTOR OF  .997
216          KM     L = 1.94  Kb = .045  Adj. Slope =  108.0
217          BA    .488
218          LG    .300    .250   5.100    .280   9.000
219          UC    .517    .455
220          UA       0       5      16      30      65      77      84      90      94      97
221          UA     100
             * DDM   ***** Preserved *****

222          KK    D100
223          KM        100-YEAR 2-HOUR ONSITE RETENTION BASIN
224          KM        MAXIMUM VOLUME DIVERSION = 10.0 acre-feet
225          DT   BS100    10.0
226          DI       0   10000
227          DQ       0   10000
             * DDM   ***** Preserved *****

228          KK   RT100
229          KM   RETRIEVE FLOW FROM DIVERSION INTO ONLINE BASIN
230          DR   BS100
             * DDM   ***** Preserved *****

231          KK    S100
232          KM   RETRIEVE FLOW INTO FICTICIOUS BASIN AND BLEED OFF WITHIN 36 HOURS.
233          KM   BLEEDOFF FLOW =  4 CFS
234          RS       1    STOR       0
235          SV       0     .01    10.0     20
236          SQ       0     1.0     4.0     10
             * DDM   ***** Preserved *****
1                                    HEC-1 INPUT                                          PAGE  7

LINE         ID.......1.......2.......3.......4.......5.......6.......7.......8.......9......10


237          KK    C100
238          KM   HYDROGRAPH COMBINATION FOR FLOW FROM SUB-BASIN 80 & 100
239          HC       3
             * DDM   ***** Preserved *****

240          KK    R100
241          KM   ROUTE FLOW FROM SUB-BASIN 100 TO SUB-BASIN 120
242          RS       1    FLOW      -1
243          RC    .016    .016    .016     940    .004
244          RX       0       1       2     2.1    52.1    52.2      53      54
245          RY     4.5     4.5     4.5       0       0     4.5     4.5     4.5
             * DDM   ***** Updated *****

246          KK     120
247          KM   SUB-BASIN 120
248          KM   24-HOUR SCS TYPE II RAINFALL WAS USED TO FIND TC & R FOR THIS BASIN
249          KM   THIS BASIN USED RAINFALL REDUCTION FACTOR OF  .987
250          KM     L = 3.07  Kb = .037  Adj. Slope =  239.0
251          BA   2.197
252          LG    .330    .280   6.800    .130  12.000
253          UC    .429    .227
254          UA       0       3       5       8      12      20      43      75      90      96
255          UA     100
             * DDM   ***** Preserved *****

256          KK    D120
257          KM        100-YEAR 2-HOUR ONSITE RETENTION BASIN
258          KM        MAXIMUM VOLUME DIVERSION = 5.7 acre-feet
259          DT   BS120     5.7
260          DI       0   10000
261          DQ       0   10000
             * DDM   ***** Preserved *****

262          KK   RT120
263          KM   RETRIEVE FLOW FROM DIVERSION INTO ONLINE BASIN
264          DR   BS120
             * DDM   ***** Preserved *****

265          KK    S120
266          KM   RETRIEVE FLOW INTO FICTICIOUS BASIN AND BLEED OFF WITHIN 36 HOURS.
267          KM   BLEEDOFF FLOW =  2 CFS
268          RS       1    STOR       0
269          SV       0     .01     5.7     15
270          SQ       0     1.0     2.0     10
             * DDM   ***** Preserved *****

271          KK    C120
```

```
 272          KM   HYDROGRAPH COMBINATION FOR FLOW FROM SUB-BASIN 100 & 120
 273          HC       3
              * DDM   ***** Preserved *****
1                                        HEC-1 INPUT                                                    PAGE  8

LINE          ID.......1.......2.......3.......4.......5.......6.......7.......8.......9......10


 274          KK    R120
 275          KM   ROUTE FLOW FROM SUB-BASIN 120 TO SIGNAL BUTTE FRS
 276          RS       2    FLOW      -1
 277          RC    .025    .016    .025    2100    .005
 278          RX       0       6      10    10.1    60.1    60.2    74.2    80.2
 279          RY       8       5       5       0       0       5       5       8
              * DDM   ***** Updated *****

 280          KK     140
 281          KM   SUB-BASIN 140
 282          KM   24-HOUR SCS TYPE II RAINFALL WAS USED TO FIND TC & R FOR THIS BASIN
 283          KM   THIS BASIN USED RAINFALL REDUCTION FACTOR OF  .996
 284          KM     L = 1.61  Kb = .044  Adj. Slope =  149.0
 285          BA    .598
 286          LG    .310    .280   4.200    .440   5.000
 287          UC    .421    .278
 288          UA       0       5      16      30      65      77      84      90      94      97
 289          UA     100
              *
              * DDM   ***** Preserved *****

 290          KK    D140
 291          KM        100-YEAR 2-HOUR ONSITE RETENTION BASIN
 292          KM        MAXIMUM VOLUME DIVERSION = 5.9 acre-feet
 293          DT   BS140     5.9
 294          DI       0   10000
 295          DQ       0   10000
              * DDM   ***** Preserved *****

 296          KK   RT140
 297          KM   RETRIEVE FLOW FROM DIVERSION INTO ONLINE BASIN
 298          DR   BS140
              * DDM   ***** Preserved *****

 299          KK    S140
 300          KM   RETRIEVE FLOW INTO FICTICIOUS BASIN AND BLEED OFF WITHIN 36 HOURS.
 301          KM   BLEEDOFF FLOW =  2 CFS
 302          RS       1    STOR       0
 303          SV       0     .01     5.9     15
 304          SQ       0     1.0     2.0     10
              *
              * DDM   ***** Preserved *****

 305          KK    C140
 306          KM   HYDROGRAPH COMBINATION
 307          HC       3
              *
              * DDM   ***** Updated *****
1                                        HEC-1 INPUT                                                    PAGE  9

LINE          ID.......1.......2.......3.......4.......5.......6.......7.......8.......9......10


 308          KK     150
 309          KM   SUB-BASIN 150
 310          KM   24-HOUR SCS TYPE II RAINFALL WAS USED TO FIND TC & R FOR THIS BASIN
 311          KM   THIS BASIN USED RAINFALL REDUCTION FACTOR OF  .998
 312          KM     L = 1.50  Kb = .047  Adj. Slope =  314.6
 313          BA    .407
 314          LG    .350    .360   5.100    .260   7.000
 315          UC    .296    .221
 316          UA       0       3       5       8      12      20      43      75      90      96
 317          UA     100
              * DDM   ***** Preserved *****

 318          KK    R150
 319          KM   ROUTING OF FLOW FROM SUB-BASIN 150 TO R152
 320          RS       2    FLOW      -1
 321          RC    .045     .04    .045    3100    .032
 322          RX       0       1       2      23      33      54      55      56
 323          RY       7       7       7       0       0       7       7       7
              * DDM   ***** Preserved *****

 324          KK    R152
 325          KM   ROUTING OF FLOW FROM R152 TO SUB-BASIN 160
 326          RS       3    FLOW      -1
```

```
327          RC    .045     .03    .045    5900    .019
328          RX       0       1       2       8      33      39      40      41
329          RY       2       2       2       0       0       2       2       2
             * DDM   ***** Updated *****

330          KK     160
331          KM   SUB-BASIN 160
332          KM   24-HOUR SCS TYPE II RAINFALL WAS USED TO FIND TC & R FOR THIS BASIN
333          KM   THIS BASIN USED RAINFALL REDUCTION FACTOR OF  .998
334          KM     L = 2.10  Kb = .047  Adj. Slope =  129.0
335          BA    .365
336          LG    .340    .330   4.150    .440   1.000
337          UC    .587    .659
338          UA       0       3       5       8      12      20      43      75      90      96
339          UA     100
             *
             * DDM   ***** Preserved *****

340          KK    D160
341          KM        100-YEAR 2-HOUR ONSITE RETENTION BASIN
342          KM        MAXIMUM VOLUME DIVERSION = 1.2 acre-feet
343          DT   BS160     1.2
344          DI       0   10000
345          DQ       0   10000
             * DDM   ***** Preserved *****
1                                    HEC-1 INPUT                                          PAGE 10

LINE         ID.......1.......2.......3.......4.......5.......6.......7.......8.......9......10


346          KK   RT160
347          KM   RETRIEVE FLOW FROM DIVERSION INTO ONLINE BASIN
348          DR   BS160
             * DDM   ***** Preserved *****

349          KK    S160
350          KM   RETRIEVE FLOW INTO FICTICIOUS BASIN AND BLEED OFF WITHIN 36 HOURS.
351          KM   BLEEDOFF FLOW =  1 CFS
352          RS       1    STOR       0
353          SV       0     .01     1.2     10
354          SQ       0     0.5     1.0     10
             * DDM   ***** Preserved *****

355          KK    C160
356          KM   HYDROGRAPH COMBINATION
357          HC       3
             *
             * DDM   ***** Updated *****

358          KK     180
359          KM   SUB-BASIN 180
360          KM   24-HOUR SCS TYPE II RAINFALL WAS USED TO FIND TC & R FOR THIS BASIN
361          KM   THIS BASIN USED RAINFALL REDUCTION FACTOR OF  .994
362          KM     L = 2.42  Kb = .041  Adj. Slope =  140.0
363          BA   1.014
364          LG    .350    .350   4.150    .430    .000
365          UC    .571    .400
366          UA       0       3       5       8      12      20      43      75      90      96
367          UA     100
             * DDM   ***** Preserved *****

368          KK    C180
369          KM   HYDROGRAPH COMBINATION FOR SIGNAL BUTTE FRS
370          HC       3
             * DDM   ***** Updated *****

371          KK     210
372          KM   SUB-BASIN 210
373          KM   24-HOUR SCS TYPE II RAINFALL WAS USED TO FIND TC & R FOR THIS BASIN
374          KM   THIS BASIN USED RAINFALL REDUCTION FACTOR OF  .995
375          KM     L = 1.84  Kb = .043  Adj. Slope =  315.0
376          BA    .792
377          LG    .350    .360   6.800    .130   4.000
378          UC    .313    .189
379          UA       0       3       5       8      12      20      43      75      90      96
380          UA     100
             * DDM   ***** Preserved *****

381          KK    R210
382          KM   ROUTING OF FLOW FROM SUB-BASIN 210 TO SUB-BASIN 220
383          RS       2    FLOW      -1
384          RC    .045     .03    .045    5100    .022
385          RX       0       1       2      14      34      46      47      48
386          RY       4       4       4       0       0       4       4       4
```

```
                    * DDM    ***** Updated *****
1                                          HEC-1 INPUT                                                    PAGE 11

LINE                ID.......1.......2.......3.......4.......5.......6.......7.......8.......9......10

 387                KK     240
 388                KM   SUB-BASIN 240
 389                KM   24-HOUR SCS TYPE II RAINFALL WAS USED TO FIND TC & R FOR THIS BASIN
 390                KM   THIS BASIN USED RAINFALL REDUCTION FACTOR OF  .992
 391                KM     L = 3.50  Kb = .039  Adj. Slope =  298.6
 392                BA   1.408
 393                LG    .350    .370   5.300    .230   2.000
 394                UC    .467    .356
 395                UA      0       3       5       8      12      20      43      75      90      96
 396                UA    100
                    * DDM    ***** Preserved *****

 397                KK    C240
 398                KM   HYDROGRAPH COMBINATION FOR SUB-BASIN 240 & 220
 399                HC       2
                    * DDM    ***** Preserved *****

 400                KK    S240
 401                KM    WEIR GEOMETRY OBTAINED FROM AS-BUILT PLANS @ PASS MTN. DIVERSION.
 402                KM   WEIR STORAGE DATA OBTAINED FROM 2' CONTOUR MAPPING.
 403                RS       1    STOR       0
 404                SA    1.38    14.2    36.5
 405                SE     1.7       5      11
 406                SS       5      42       3     1.5
                    * DDM    ***** Preserved *****

 407                KK    R240
 408                KM   ROUTE FLOW FROM SUB-BASIN 240 TO SUB-BASIN 220
 409                KM   PASS MOUNTAIN DIVERSION
 410                RS       1    FLOW      -1
 411                RC    .035    .025    .035    1800    .005
 412                RX       0      15      30      39      69      81      96     111
 413                RY     3.6     3.3       3       0       0       3       3       4
                    * DDM    ***** Updated *****

 414                KK     220
 415                KM   SUB-BASIN 220
 416                KM   24-HOUR SCS TYPE II RAINFALL WAS USED TO FIND TC & R FOR THIS BASIN
 417                KM   THIS BASIN USED RAINFALL REDUCTION FACTOR OF  .997
 418                KM     L = 1.92  Kb = .046  Adj. Slope =  315.0
 419                BA    .473
 420                LG    .350    .350   7.000    .120   5.000
 421                UC    .333    .282
 422                UA       0       3       5       8      12      20      43      75      90      96
 423                UA     100
                    * DDM    ***** Preserved *****

 424                KK    C220
 425                KM   HYDROGRAPH COMBINATION FOR SUB-BASIN 240 & 220
 426                HC       2
                    * DDM    ***** Preserved *****
1                                          HEC-1 INPUT                                                    PAGE 12

LINE                ID.......1.......2.......3.......4.......5.......6.......7.......8.......9......10

 427                KK   SW220
 428                KM    WEIR GEOMETRY OBTAINED FROM AS-BUILT PLANS @ PASS MTN. DIVERSION.
 429                KM   WEIR STORAGE DATA OBTAINED FROM 2' CONTOUR MAPPING.
 430                RS       1    STOR       0
 431                SA     .78     4.1    13.7
 432                SE       1       3      10
 433                SS       3      65       3     1.5
                    * DDM    ***** Preserved *****

 434                KK    R220
 435                KM   ROUTE FLOW FROM SUB-BASIN 220 TO SUB-BASIN 200
 436                KM   PASS MOUNTAIN DIVERSION
 437                RS       1    FLOW      -1
 438                RC    .035    .025    .035    1250    .005
 439                RX       0      50     100     109     139     148     178     184
 440                RY       5       4       3       0       0       3       3       5
                    * DDM    ***** Updated *****

 441                KK     190
 442                KM   SUB-BASIN 190
 443                KM   24-HOUR SCS TYPE II RAINFALL WAS USED TO FIND TC & R FOR THIS BASIN
 444                KM   THIS BASIN USED RAINFALL REDUCTION FACTOR OF  .994
```

```
445          KM     L = 1.91  Kb = .042  Adj. Slope =  315.0
446          BA    .918
447          LG    .350    .390   5.800    .190   8.000
448          UC    .321    .185
449          UA       0       3       5       8      12      20      43      75      90      96
450          UA     100
             * DDM   ***** Preserved *****

451          KK    R190
452          KM   ROUTING OF FLOW FROM SUB-BASIN 190 TO SUB-BASIN 200
453          RS       2    FLOW      -1
454          RC    .045     .03    .045    4740     .03
455          RX       0       1       2      17      37      52      53      54
456          RY       5       5       5       0       0       5       5       5
             * DDM   ***** Preserved *****

457          KK    R192
458          KM   ROUTING OF FLOW FROM SUB-BASIN 190 TO SUB-BASIN 200
459          RS       3    FLOW      -1
460          RC    .045    .035    .045    2200    .018
461          RX       0       1      50      59      79      88     137     138
462          RY     4.5       3       3       0       0       3       3     4.5
             * DDM   ***** Updated *****

463          KK     200
464          KM   SUB-BASIN 200
465          KM   24-HOUR SCS TYPE II RAINFALL WAS USED TO FIND TC & R FOR THIS BASIN
466          KM   THIS BASIN USED RAINFALL REDUCTION FACTOR OF  .997
467          KM     L = 1.58  Kb = .045  Adj. Slope =  305.6
468          BA    .530
469          LG    .350    .390   5.700    .200  10.000
470          UC    .300    .201
1                                        HEC-1 INPUT                                                PAGE 13

LINE         ID.......1.......2.......3.......4.......5.......6.......7.......8.......9......10

471          UA       0       3       5       8      12      20      43      75      90      96
472          UA     100
             * DDM   ***** Preserved *****

473          KK    C200
474          KM   HYDROGRAPH COMBINATION FOR SUB-BASIN 220 & 200
475          HC       3
             * DDM   ***** Preserved *****

476          KK   SW200
477          KM    WEIR GEOMETRY OBTAINED FROM AS-BUILT PLANS @ PASS MTN. DIVERSION.
478          KM   WEIR STORAGE DATA OBTAINED FROM 2' CONTOUR MAPPING.
479          RS       1    STOR       0
480          SA    2.56     3.1     9.4
481          SE       0       3      10
482          SS       3     112       3     1.5
             * DDM   ***** Preserved *****

483          KK    R200
484          KM   ROUTE FLOW FROM SUB-BASIN 200 TO SIGNAL BUTTE FRS through storage
485          RS       1    FLOW      -1
486          RC    .035    .025    .035     650    .005
487          RX       0       1       2      17     117     132     133     134
488          RY       5       5       5       0       0       5       5       5
             * DDM   ***** Preserved *****

489          KK   SS200
490          KM    WEIR GEOMETRY OBTAINED FROM AS-BUILT PLANS @ PASS MTN. DIVERSION.
491          KM   WEIR STORAGE DATA OBTAINED FROM 2' CONTOUR MAPPING.
492          RS       1    STOR       0
493          SA       8     9.2     9.2
494          SE       0       7      10
495          SS       7     251       3     1.5
             * DDM   ***** Preserved *****

496          KK   RR200
497          KM   ROUTE FLOW FROM SUB-BASIN 200 TO SIGNAL BUTTE FRS
498          RS       4    FLOW      -1
499          RC    .035    .025    .035    3150    .005
500          RX       0       1       2      17     117     132     133     134
501          RY       5       5       5       0       0       5       5       5
             * DDM   ***** Preserved *****

502          KK   CC180
503          KM   HYDROGRAPH COMBINATION FOR SIGNAL BUTTE FRS
504          HC       2
             * DDM   ***** Preserved *****
```

```
505          KK    S180
506          KM   SIGNAL BUTTE FRS DATED 1/28/85
507          KM   OUTLET PIPE=36"RCP; L= 147';  INLET INV.=1690; OUTLET INV.=1687
508          KM   EMERGENCY SPILLWAY ELEV.=1712.4; PRINCIPAL SPILLWAY ELEV.=1701
509          KM   STORAGE VOLUME BELOW PRINCIPAL SPILLWAY FOR SEDIMENT = 250 ACRE-FEET
             *  ESE = 1712.4 ft; PSE = 1701.0 ft; Sediment Vol. = 247 Ac-Ft.
510          RS       1    STOR       0
1                                    HEC-1 INPUT                                          PAGE 14

LINE         ID.......1.......2.......3.......4.......5.......6.......7.......8.......9......10

511          SV       0   172.1   273.3   482.2   871.3  1101.5  1163.5  1294.1  1390.2  1432.1
512          SV  1446.1  1578.8  1733.6  1980.3  2712.2    3121    3530
513          SQ       0    10.2    10.7   121.8   138.4   145.9   147.7   151.4     154     155
514          SQ     156     390     820    1950    6600    9500   12400
515          SE     696     700   701.4     704     708     710   710.5   711.5   712.2   712.5
516          SE   712.6   713.5   714.5     716     720     722     724
             * DDM   ***** Preserved *****

517          KK    R180
518          KM   Routing length updated using Signal Butte Floodway plans dated March 1983
519          KM   Routing length increased 100' from 1500' to 1600'    12/12/00
520          KM   CHANNEL GEOMETRY FOR SIGNAL BUTTE FRS OBTAINED FROM AS-BUILT PLANS.
521          KM   ROUTE FLOW FROM SIGNAL BUTTE FRS TO SUB-BASIN 260
522          RS       1    FLOW      -1
523          RC    .035    .025    .035    1600    .003
524          RX       0       1       2    22.6    38.6    59.2      60      61
525          RY     9.3     9.3     9.3       0       0     9.3     9.3     9.3
             * DDM   ***** Updated *****

526          KK     260
527          KM   SUB-BASIN 260
528          KM   24-HOUR SCS TYPE II RAINFALL WAS USED TO FIND TC & R FOR THIS BASIN
529          KM   THIS BASIN USED RAINFALL REDUCTION FACTOR OF  .998
530          KM     L =  .81  Kb = .046  Adj. Slope =   68.0
531          BA    .263
532          LG    .280    .210   6.600    .160  11.000
533          UC    .350    .209
534          UA       0       5      16      30      65      77      84      90      94      97
535          UA     100
             * DDM   ***** Preserved *****

536          KK    C260
537          KM   HYDROGRAPH COMBINATION FOR OUTFLOW OF SIGNAL BUTTE FRS & SUB-BASIN 260
538          HC       2    .263
             * DDM   ***** Preserved *****

539          KK    R260
540          KM   Routing length updated using Signal Butte Floodway plans dated March 1983
541          KM   Routing length unchanged     12/12/00
542          KM   CHANNEL GEOMETRY FOR SIGNAL BUTTE FRS OBTAINED FROM AS-BUILT PLANS.
543          KM   ROUTE FLOW FROM SUB-BASIN 260 TO SUB-BASIN 280
544          RS       3    FLOW      -1
545          RC    .035    .025    .035    2300    .003
546          RX       0       1       2    23.4    43.4    64.8      65      66
547          RY     9.7     9.7     9.7       0       0     9.7     9.7     9.7
             * DDM   ***** Updated *****

548          KK     280
549          KM   SUB-BASIN 280
550          KM   24-HOUR SCS TYPE II RAINFALL WAS USED TO FIND TC & R FOR THIS BASIN
551          KM   THIS BASIN USED RAINFALL REDUCTION FACTOR OF  .998
552          KM     L =  .77  Kb = .048  Adj. Slope =   84.0
553          BA    .319
554          LG    .300    .250   5.300    .290  15.000
555          UC    .329    .168
1                                    HEC-1 INPUT                                          PAGE 15

LINE         ID.......1.......2.......3.......4.......5.......6.......7.......8.......9......10

556          UA       0       5      16      30      65      77      84      90      94      97
557          UA     100
             * DDM   ***** Preserved *****

558          KK    C280
559          KM   HYDROGRAPH COMBINATION FOR SUB-BASIN 260 & SUB-BASIN 280
560          HC       2
             * DDM   ***** Preserved *****

561          KK    R280
562          KM   Routing length updated using Signal Butte Floodway plans dated March 1983
563          KM   Routing length decreased 400' from 2500' to 2100'    12/12/00
564          KM   CHANNEL GEOMETRY FOR SIGNAL BUTTE FRS OBTAINED FROM AS-BUILT PLANS.
565          KM   ROUTE FLOW FROM SUB-BASIN 280 TO SUB-BASIN 300
```

```
566          RS       3    FLOW      -1
567          RC    .035    .025    .035    2100    .003
568          RX       0       1       2    23.4    43.4    64.8      65      66
569          RY     9.7     9.7     9.7       0       0     9.7     9.7     9.7
             * DDM   ***** Updated *****

570          KK     300
571          KM   SUB-BASIN 300
572          KM   24-HOUR SCS TYPE II RAINFALL WAS USED TO FIND TC & R FOR THIS BASIN
573          KM   THIS BASIN USED RAINFALL REDUCTION FACTOR OF  .998
574          KM     L =  .78  Kb = .049  Adj. Slope =  103.0
575          BA    .289
576          LG    .300    .250   4.200    .520  16.000
577          UC    .321    .174
578          UA       0       5      16      30      65      77      84      90      94      97
579          UA     100
             * DDM   ***** Preserved *****

580          KK    C300
581          KM   HYDROGRAPH COMBINATION OF SUB-BASIN 280 & 300
582          HC       2
             *
             * DDM   ***** Preserved *****

583          KK    R300
584          KM   Routing length updated using Signal Butte Floodway plans dated March 1983
585          KM   Routing length increased 300' from 2200' to 2500'    12/12/00
586          KM   CHANNEL GEOMETRY FOR SIGNAL BUTTE FRS OBTAINED FROM AS-BUILT PLANS.
587          KM   ROUTE FLOW FROM SUB-BASIN 300 TO START OF FLOODWAY CONCRETE CHANNEL
588          RS       2    FLOW      -1
589          RC    .035    .025    .035    2500    .003
590          RX       0       1       2    23.4    55.4    76.8      77      78
591          RY     9.7     9.7     9.7       0       0     9.7     9.7     9.7
             *
             * DDM   ***** Updated *****
```



```
LINE         ID.......1.......2.......3.......4.......5.......6.......7.......8.......9......10

592          KK    305A
593          KM   SUB-BASIN 305A
594          KM   24-HOUR SCS TYPE II RAINFALL WAS USED TO FIND TC & R FOR THIS BASIN
595          KM   THIS BASIN USED RAINFALL REDUCTION FACTOR OF  .998
596          KM     L =  .98  Kb = .048  Adj. Slope =   82.0
597          BA    .316
598          LG    .340    .320   4.600    .350  12.000
599          UC    .400    .254
600          UA       0       5      16      30      65      77      84      90      94      97
601          UA     100
             *
             * DDM   ***** Preserved *****

602          KK    C305
603          KM   HYDROGRAPH COMBINATION OF SUB-BASIN 300 AND 305A
604          HC       2
             * DDM   ***** Preserved *****

605          KK    R305
606          KM   Routing length updated using Signal Butte Floodway plans dated March 1983
607          KM   CHANNEL GEOMETRY FOR SPOOK HILL FRS OBTAINED FROM AS-BUILTS PLANS.
608          KM   CONTINUE TO ROUTE FLOW WITHIN CONCRETE CHANNEL TO SPOOK HILL FRS
609          RS       2    FLOW      -1
610          RC    .016    .016    .016    4000   .0146
611          RX       0       1       2     2.1    16.1    16.2      17      18
612          RY     7.5     7.5     7.5       0       0     7.5     7.5     7.5
             *
             * DDM   ***** Updated *****

613          KK   320B1
614          KM   SUB-BASIN 320B1
615          KM   24-HOUR SCS TYPE II RAINFALL WAS USED TO FIND TC & R FOR THIS BASIN
616          KM   THIS BASIN USED RAINFALL REDUCTION FACTOR OF  .997
617          KM     L = 1.13  Kb = .046  Adj. Slope =  106.0
618          BA    .454
619          LG    .300    .260   4.800    .310  17.000
620          UC    .375    .215
621          UA       0       5      16      30      65      77      84      90      94      97
622          UA     100
             *
             * DDM   ***** Preserved *****

623          KK  D320B1
624          KM        DIVERT FLOW INTO ONLINE  DETENTION BASIN
```

```
625          KM   DETENTION/RETENTION BASINS LOCATED WITHIN THREE SUBDIVISIONS
626          KM   SIERRA HEIGHTS       FALCON RIDGE    & MARBLE CREEK
627          KM        MAXIMUM VOLUME DIVERSION =  9.3 acre-feet
628          DT  B320B1    9.30
629          DI       0   10000
630          DQ       0   10000
             * DDM   ***** Preserved *****
1                                    HEC-1 INPUT                                                    PAGE 17

LINE         ID.......1.......2.......3.......4.......5.......6.......7.......8.......9......10


631          KK  T320B1
632          KM   RETRIEVE FLOW FROM DIVERSION INTO ONLINE BASIN
633          DR  B320B1
             * DDM   ***** Preserved *****

634          KK  S320B1
635          KM   RETRIEVE FLOW INTO FICTICIOUS BASIN AND BLEED OFF WITHIN 36 HOURS.
636          KM   9.30 ACRE-FEETx43560/36x3600=4.cfs
637          RS       1    STOR       0
638          SV       0     .01     9.3    15.0
639          SQ       0     0.5     4.0    50.0
             * DDM   ***** Preserved *****

640          KK  C320B1
641          KM   HYDROGRAPH COMBINATION FOR SPOOK HILL FRS
642          HC       3
             *
             * DDM   ***** Updated *****

643          KK     350
644          KM   SUB-BASIN 350
645          KM   24-HOUR SCS TYPE II RAINFALL WAS USED TO FIND TC & R FOR THIS BASIN
646          KM   THIS BASIN USED RAINFALL REDUCTION FACTOR OF  .994
647          KM     L = 2.22  Kb = .041  Adj. Slope =  315.0
648          BA    .997
649          LG    .350    .350   4.550    .340   4.000
650          UC    .363    .227
651          UA       0       3       5       8      12      20      43      75      90      96
652          UA     100
             * DDM   ***** Preserved *****

653          KK    D350
654          KM   DIVERT FLOW FROM SUB-BASIN 350. FOR MODELING PURPOSES THE SPLIT FLOW WILL
655          KM   BE ROUTED BETWEEN SUB-BASINS 355 & 310. THE MAIN FLOW WILL ROUTED TO 310
656          DT   SF350
657          DI       0    5000
658          DQ       0    2500
             * DDM   ***** Preserved *****

659          KK    R350
660          KM   CHANNEL GEOMETRY OBTAINED FROM 2' CONTOUR MAPPING
661          KM   ROUTING OF MAIN FLOW FROM DIVERSION OF SUB-BASIN 350 TO SUB-BASIN 310
662          RS       7    FLOW      -1
663          RC    .045    .035    .045    5150    .025
664          RX       0       1      40      46      56      62     102     103
665          RY       3       2       2       0       0       2       2       3
             * DDM   ***** Updated *****

666          KK     310
667          KM   SUB-BASIN 310
668          KM   24-HOUR SCS TYPE II RAINFALL WAS USED TO FIND TC & R FOR THIS BASIN
669          KM   THIS BASIN USED RAINFALL REDUCTION FACTOR OF  .997
670          KM     L = 2.70  Kb = .045  Adj. Slope =  283.5
671          BA    .538
1                                    HEC-1 INPUT                                                    PAGE 18

LINE         ID.......1.......2.......3.......4.......5.......6.......7.......8.......9......10

672          LG    .350    .350   3.910    .480    .000
673          UC    .483    .520
674          UA       0       3       5       8      12      20      43      75      90      96
675          UA     100
             * DDM   ***** Preserved *****

676          KK    C310
677          KM   HYDROGRAPH COMBINATION OF SUB-BASINS 350 & 310
678          HC       2    1.04
             * DDM   ***** Preserved *****

679          KK    R310
680          KM   CHANNEL GEOMETRY OBTAINED FROM 2' CONTOUR MAPPING.
681          KM   ROUTING OF FLOW FROM SUB-BASIN 310 TO 320B
```

```
682          RS      10    FLOW      -1
683          RC    .045    .035    .045    8550    .022
684          RX       0       1      40      46      56      62     102     103
685          RY       3       2       2       0       0       2       2       3
             *
             * DDM   ***** Updated *****

686          KK    305B
687          KM   SUB-BASIN 305B
688          KM   24-HOUR SCS TYPE II RAINFALL WAS USED TO FIND TC & R FOR THIS BASIN
689          KM   THIS BASIN USED RAINFALL REDUCTION FACTOR OF  .998
690          KM     L = 1.70  Kb = .047  Adj. Slope =  124.0
691          BA    .386
692          LG    .350    .350   4.500    .350    .000
693          UC    .492    .443
694          UA       0       3       5       8      12      20      43      75      90      96
695          UA     100
             *
             * DDM   ***** Preserved *****

696          KK   R305B
697          KM   CHANNEL GEOMETRY OBTAINED FROM 2' CONTOUR MAPPING.
698          KM   ROUTING OF FLOW FROM SUB-BASINS 305B TO SUB-BASIN 320B2.
699          RS       3    FLOW      -1
700          RC    .045    .035    .045    1700    .016
701          RX       0       1      40      46      56      62     102     103
702          RY       3       2       2       0       0       2       2       3
             *
             * DDM   ***** Updated *****

703          KK   320B2
704          KM   SUB-BASIN 320B2
705          KM   24-HOUR SCS TYPE II RAINFALL WAS USED TO FIND TC & R FOR THIS BASIN
706          KM   THIS BASIN USED RAINFALL REDUCTION FACTOR OF  .999
707          KM     L = 1.08  Kb = .050  Adj. Slope =  120.0
708          BA    .220
709          LG    .300    .270   4.500    .380   9.000
710          UC    .375    .314
711          UA       0       5      16      30      65      77      84      90      94      97
712          UA     100
             *
             * DDM   ***** Preserved *****
```



```
LINE         ID.......1.......2.......3.......4.......5.......6.......7.......8.......9......10

713          KK  D320B2
714          KM        DIVERT FLOW INTO ONLINE  DETENTION BASIN
715          KM   DETENTION/RETENTION BASINS LOCATED WITHIN THREE SUBDIVISIONS
716          KM   SIERRA HEIGHTS       FALCON RIDGE    & MARBLE CREEK
717          KM        MAXIMUM VOLUME DIVERSION =  3.32acre-feet
718          DT  B320B2    3.32
719          DI       0   10000
720          DQ       0   10000
             * DDM   ***** Preserved *****

721          KK  T320B2
722          KM   RETRIEVE FLOW FROM DIVERSION INTO ONLINE BASIN
723          DR  B320B2
             * DDM   ***** Preserved *****

724          KK  S320B2
725          KM   RETRIEVE FLOW INTO FICTICIOUS BASIN AND BLEED OFF WITHIN 36 HOURS.
726          KM   3.32 ACRE-FEETx43560/36x3600=1.2cfs
727          RS       1    STOR       0
728          SV       0     .01     3.3     5.0
729          SQ       0     0.5     1.2    15.0
             *
             * DDM   ***** Preserved *****

730          KK  C320B2
731          KM    Combine R305B, R310 and 320B2
732          HC       4
             *
             * DDM   ***** Preserved *****

733          KK  R320B2
734          KM   CHANNEL GEOMETRY OBTAINED FROM 2' CONTOUR MAPPING.
735          KM   ROUTING OF FLOW FROM SUB-BASINS 320B2 TO SUB-BASIN 340B.
736          RS       2    FLOW      -1
737          RC    .045    .035    .045    1000    .016
738          RX       0       1      40      46      56      62     102     103
739          RY       5       2       2       0       0       2       2       5
```

```
                 *
                 * DDM   ***** Updated *****

 740             KK    340B
 741             KM   SUB-BASIN 340B
 742             KM   24-HOUR SCS TYPE II RAINFALL WAS USED TO FIND TC & R FOR THIS BASIN
 743             KM   THIS BASIN USED RAINFALL REDUCTION FACTOR OF  .998
 744             KM     L =  .85  Kb = .049  Adj. Slope =  238.5
 745             BA    .290
 746             LG    .280    .250   4.000    .560  23.000
 747             UC    .242    .136
 748             UA       0       5      16      30      65      77      84      90      94      97
 749             UA     100
                 *
                 * DDM   ***** Preserved *****
1                                          HEC-1 INPUT                                          PAGE 20

LINE             ID.......1.......2.......3.......4.......5.......6.......7.......8.......9......10


 750             KK   D340B
 751             KM        DIVERT FLOW INTO ONLINE  DETENTION BASIN
 752             KM   DETENTION/RETENTION BASINS LOCATED WITHIN THREE SUBDIVISIONS
 753             KM   GRANDVIEW ESTATES    BOULDER MOUNTAIN & 33% OF MESA HIGHLANDS
 754             KM        MAXIMUM VOLUME DIVERSION = 15.6 acre-feet
 755             DT  BS340B    15.6
 756             DI       0   10000
 757             DQ       0   10000
                 * DDM   ***** Preserved *****

 758             KK  RT340B
 759             KM   RETRIEVE FLOW FROM DIVERSION INTO ONLINE BASIN
 760             DR  BS340B
                 * DDM   ***** Preserved *****

 761             KK   S340B
 762             KM   RETRIEVE FLOW INTO FICTICIOUS BASIN AND BLEED OFF WITHIN 36 HOURS.
 763             KM    15.6 ACRE-FEETx43560/36x3600= 5.2cfs
 764             RS       1    STOR       0
 765             SV       0     .01    15.6      20
 766             SQ       0     1.0     5.2      50
                 * DDM   ***** Preserved *****

 767             KK   C340B
 768             KM   HYDROGRAPH COMBINATION
 769             HC       3
                 *
                 * DDM   ***** Preserved *****

 770             KK  DD340B
 771             KM   DIVERT FLOW INTO OFFLINE DETENTION BASIN LOCATED WITHIN SUB-BASINS 340B.
 772             DT   BS340
 773             DI       0     200    1000    2000    5000
 774             DQ       0       0     800    1800    4800
                 * DDM   ***** Preserved *****

 775             KK   RT340
 776             KM   RETRIEVE FLOW FROM DIVERSION
 777             DR   BS340
                 * DDM   ***** Preserved *****

 778             KK  SS340B
 779             KM   RETRIEVE FLOW INTO OFFLINE BASIN AND BLEED OFF WITHIN 36 HOURS.
 780             KM      55 ACRE-FEETx43560/36x3600 = 19cfs
 781             RS       1    STOR       0
 782             SV       0     .01      55      60
 783             SQ       0     3.0      50     100
                 *
1                                          HEC-1 INPUT                                          PAGE 21

LINE             ID.......1.......2.......3.......4.......5.......6.......7.......8.......9......10


 784             KK  CD340B
 785             KM   HYDROGRAPH COMBINATION
 786             HC       2
                 * DDM   ***** Preserved *****

 787             KK   RT350
 788             KM   RETRIEVE SPLIT FLOW FROM DIVERSION OF SUB-BASIN 350
 789             DR   SF350
                 * DDM   ***** Preserved *****

 790             KK   RR350
```

```
791          KM   CHANNEL GEOMETRY OBTAINED FROM 2' CONTOUR MAPPING.
792          KM   ROUTING OF FLOW FROM SPLIT OF SUB-BASIN 350 TO 355
793          RS       7    FLOW      -1
794          RC    .045    .035    .045    6050    .025
795          RX       0       1      40      46      56      62     102     103
796          RY       3       2       2       0       0       2       2       3
             *
             * DDM   ***** Updated *****

797          KK     355
798          KM   SUB-BASIN 355
799          KM   24-HOUR SCS TYPE II RAINFALL WAS USED TO FIND TC & R FOR THIS BASIN
800          KM   THIS BASIN USED RAINFALL REDUCTION FACTOR OF  .996
801          KM     L = 3.00  Kb = .044  Adj. Slope =  284.0
802          BA    .676
803          LG    .340    .340   4.450    .370   4.000
804          UC    .488    .502
805          UA       0       3       5       8      12      20      43      75      90      96
806          UA     100
             * DDM   ***** Preserved *****

807          KK    C355
808          KM   HYDROGRAPH COMBINATION OF SUB-BASIN 355 AND THE SPLIT FLOW FROM SUB-BASIN 350
809          HC       2  1.1745
             *
             * DDM   ***** Preserved *****

810          KK    D355
811          KM        DIVERT FLOW INTO OFFLINE BASIN
812          KM        MAXIMUM VOLUME DIVERSION = 18 acre-feet
813          DT   BS355
814          DI       0     100     450    1000    2000    5000
815          DQ       0       0       0     550    1550    4550
             *
             * DDM   ***** Preserved *****

816          KK   RT355
817          KM   RETRIEVE FLOW FROM DIVERSION INTO OFFLINE BASIN
818          DR   BS355
             *
             * DDM   ***** Preserved *****
```



```
LINE         ID.......1.......2.......3.......4.......5.......6.......7.......8.......9......10

819          KK    S355
820          KM   RETRIEVE FLOW INTO FICTICIOUS BASIN AND BLEED OFF WITHIN 36 HOURS.
821          KM   18.0 ACRE-FEETx43560/36x3600= 6.0CFS
822          RS       1    STOR       0
823          SV       0     .01    18.0    25.0
824          SQ       0     2.0      40      50
             *
             * DDM   ***** Preserved *****

825          KK   CC355
826          KM   HYDROGRAPH COMBINATION
827          HC       2
             *
             * DDM   ***** Preserved *****

828          KK    R355
829          KM   CHANNEL GEOMETRY OBTAINED FROM 2' CONTOUR MAPPING.
830          KM   ROUTING OF FLOW FROM SUB-BASIN 355 TO SUB-BASIN 340B
831          RS       1    FLOW      -1
832          RC    .045    .035    .045    4000    .025
833          RX       0       1      40      46      56      62     102     103
834          RY       3       2       2       0       0       2       2       3
             *
             * DDM   ***** Preserved *****

835          KK  CC340B
836          KM   HYDROGRAPH COMBINATION
837          HC       2
             * DDM   ***** Preserved *****

838          KK   R340B
839          KM   CHANNEL GEOMETRY OBTAINED FROM 2' CONTOUR MAPPING.
840          KM   ROUTING OF FLOW FROM SUB-BASIN 340B TO SUB-BASIN 340A2.
841          RS       2    FLOW      -1
842          RC    .045    .035    .045    1500    .027
843          RX       0       1      40      46      56      62     102     103
844          RY       3       2       2       0       0       2       2       3
             *
```

```
                 * DDM   ***** Updated *****

 845             KK   340A2
 846             KM   SUB-BASIN 340A2
 847             KM   24-HOUR SCS TYPE II RAINFALL WAS USED TO FIND TC & R FOR THIS BASIN
 848             KM   THIS BASIN USED RAINFALL REDUCTION FACTOR OF 1.000
 849             KM     L =  .48  Kb = .047  Adj. Slope =  297.9
 850             BA    .037
 851             LG    .230    .310   5.300    .250  55.000
 852             UC    .158    .174
 853             UA       0       5      16      30      65      77      84      90      94      97
 854             UA     100
                 *
                 * DDM   ***** Preserved *****
1                                          HEC-1 INPUT                                          PAGE 23

LINE             ID.......1.......2.......3.......4.......5.......6.......7.......8.......9......10


 855             KK  D340A2
 856             KM        DIVERT FLOW INTO ONLINE  DETENTION BASIN
 857             KM        MAXIMUM VOLUME DIVERSION = 2.2 acre-feet
 858             DT  B340A2     2.2
 859             DI       0   10000
 860             DQ       0   10000
                 * DDM   ***** Preserved *****

 861             KK  T340A2
 862             KM   RETRIEVE FLOW FROM DIVERSION INTO ONLINE BASIN
 863             DR  B340A2
                 * DDM   ***** Preserved *****

 864             KK  S340A2
 865             KM   RETRIEVE FLOW INTO FICTICIOUS BASIN AND BLEED OFF WITHIN 36 HOURS.
 866             KM    2.20 ACRE-FEETx43560/36x3600= 1.0cfs
 867             RS       1    STOR       0
 868             SV       0     .01     2.2     5.0
 869             SQ       0     0.5     1.0    10.0
                 * DDM   ***** Preserved *****

 870             KK  C340A2
 871             KM   HYDROGRAPH COMBINATION
 872             HC       3
                 *
                 * DDM   ***** Preserved *****

 873             KK  R340A2
 874             KM   CHANNEL GEOMETRY OBTAINED FROM 2' CONTOUR MAPPING.
 875             KM   ROUTING OF FLOW FROM SUB-BASIN 340A2 TO SUB-BASIN 320B.
 876             RS       5    FLOW      -1
 877             RC    .045    .035    .045    4500    .020
 878             RX       0       1      40      46      56      62     102     103
 879             RY       3       2       2       0       0       2       2       3
                 *
                 * DDM   ***** Preserved *****

 880             KK  CC320B
 881             KM   HYDROGRAPH COMBINATION
 882             HC       2
                 *
                 * DDM   ***** Preserved *****

 883             KK   R320B
 884             KM   Routing Flow from 320B1 to 320A
 885             KM   Routing length updated using Signal Butte Floodway plans dated March 1983
 886             KM   CHANNEL GEOMETRY FOR SPOOK HILL FRS OBTAINED FROM AS-BUILTS PLANS.
 887             KM   CONTINUE TO ROUTE FLOW WITHIN CONCRETE CHANNEL TO SPOOK HILL FRS
 888             RS       1    FLOW      -1
 889             RC    .016    .016    .016    1500   .0146
 890             RX       0       1       2     2.1    16.1    16.2      17      18
 891             RY     7.5     7.5     7.5       0       0     7.5     7.5     7.5
                 *
                 * DDM   ***** Updated *****
1                                          HEC-1 INPUT                                          PAGE 24

LINE             ID.......1.......2.......3.......4.......5.......6.......7.......8.......9......10


 892             KK    320A
 893             KM   SUB-BASIN 320A
 894             KM   24-HOUR SCS TYPE II RAINFALL WAS USED TO FIND TC & R FOR THIS BASIN
 895             KM   THIS BASIN USED RAINFALL REDUCTION FACTOR OF  .998
 896             KM     L = 1.07  Kb = .049  Adj. Slope =   93.0
 897             BA    .270
```

```
898          LG    .280    .250   4.300    .490  25.000
899          UC    .404    .301
900          UA       0       5      16      30      65      77      84      90      94      97
901          UA     100
             *
             * DDM   ***** Preserved *****

902          KK   D320A
903          KM        DIVERT FLOW INTO ONLINE  DETENTION BASIN
904          KM   DETENTION/RETENTION BASINS LOCATED WITHIN THREE SUBDIVISIONS
905          KM   GRANDVIEW ESTATES    BOULDER MOUNTAIN & 33% OF MESA HIGHLANDS
906          KM        MAXIMUM VOLUME DIVERSION = 11.8 acre-feet
907          DT  BS320A    11.8
908          DI       0   10000
909          DQ       0   10000
             * DDM   ***** Preserved *****

910          KK  RT320A
911          KM   RETRIEVE FLOW FROM DIVERSION INTO ONLINE BASIN
912          DR  BS320A
             * DDM   ***** Preserved *****

913          KK   S320A
914          KM   RETRIEVE FLOW INTO FICTICIOUS BASIN AND BLEED OFF WITHIN 36 HOURS.
915          KM    11.8 ACRE-FEETx43560/36x3600= 4.0cfs
916          RS       1    STOR       0
917          SV       0     .01    11.8      20
918          SQ       0     1.0     4.0    40.0
             * DDM   ***** Preserved *****

919          KK    C320
920          KM   HYDROGRAPH COMBINATION
921          HC       3
             *
             * DDM   ***** Updated *****

922          KK   340A1
923          KM   SUB-BASIN 340A1
924          KM   24-HOUR SCS TYPE II RAINFALL WAS USED TO FIND TC & R FOR THIS BASIN
925          KM   THIS BASIN USED RAINFALL REDUCTION FACTOR OF  .993
926          KM     L = 1.80  Kb = .045  Adj. Slope =  117.0
927          BA   1.089
928          LG    .250    .250   4.150    .560  24.000
929          UC    .500    .261
930          UA       0       5      16      30      65      77      84      90      94      97
931          UA     100
             *
             * DDM   ***** Preserved *****
```



```
LINE         ID.......1.......2.......3.......4.......5.......6.......7.......8.......9......10

932          KK  D340A1
933          KM        DIVERT FLOW INTO ONLINE  DETENTION BASIN
934          KM   DETENTION/RETENTION BASINS LOCATED WITHIN THREE SUBDIVISIONS
935          KM   GRANDVIEW ESTATES    BOULDER MOUNTAIN & 33% OF MESA HIGHLANDS
936          KM        MAXIMUM VOLUME DIVERSION = 91.9 acre-feet
937          DT  B340A1    91.9
938          DI       0   10000
939          DQ       0   10000
             * DDM   ***** Preserved *****

940          KK  T340A1
941          KM   RETRIEVE FLOW FROM DIVERSION INTO ONLINE BASIN
942          DR  B340A1
             * DDM   ***** Preserved *****

943          KK  S340A1
944          KM   RETRIEVE FLOW INTO FICTICIOUS BASIN AND BLEED OFF WITHIN 36 HOURS.
945          KM    91.9 ACRE-FEETx43560/36x3600=30.9cfs
946          RS       1    STOR       0
947          SV       0     .01    91.9     120
948          SQ       0     3.0    20.9     300
             *
             * DDM   ***** Preserved *****

949          KK  C340A1
950          KM   HYDROGRAPH COMBINATION FOR SPOOK HILL FRS
951          HC       2
             *
             * DDM   ***** Preserved *****

952          KK    C340
```

```
 953          KM   HYDROGRAPH COMBINATION FOR SPOOK HILL FRS
 954          HC       2
              *
              * DDM   ***** Updated *****

 955          KK     360
 956          KM   SUB-BASIN 360
 957          KM   24-HOUR SCS TYPE II RAINFALL WAS USED TO FIND TC & R FOR THIS BASIN
 958          KM   THIS BASIN USED RAINFALL REDUCTION FACTOR OF  .995
 959          KM     L = 2.10  Kb = .044  Adj. Slope =  124.0
 960          BA    .880
 961          LG    .260    .250   4.100    .570  23.000
 962          UC    .538    .362
 963          UA       0       5      16      30      65      77      84      90      94      97
 964          UA     100
              * DDM   ***** Preserved *****

 965          KK    D360
 966          KM        DIVERT FLOW INTO ONLINE  DETENTION BASIN
 967          KM   DETENTION/RETENTION BASINS LOCATED WITHIN 33% OF MESA HIGHLANDS
 968          KM        MAXIMUM VOLUME DIVERSION = 49.5 acre-feet
 969          DT   BS360    49.5
 970          DI       0   10000
1                                        HEC-1 INPUT                                          PAGE 26

LINE          ID.......1.......2.......3.......4.......5.......6.......7.......8.......9......10

 971          DQ       0   10000
              * DDM   ***** Preserved *****

 972          KK   RT360
 973          KM   RETRIEVE FLOW FROM DIVERSION INTO ONLINE BASIN
 974          DR   BS360
              * DDM   ***** Preserved *****

 975          KK    S360
 976          KM   RETRIEVE FLOW INTO FICTICIOUS BASIN AND BLEED OFF WITHIN 36 HOURS.
 977          KM    49.5 ACRE-FEETx43560/36x3600=16.6 cfs
 978          RS       1    STOR       0
 979          SV       0     .01    49.5      70
 980          SQ       0     3.0    16.6     150
              * DDM   ***** Preserved *****

 981          KK    C360
 982          KM   HYDROGRAPH COMBINATION FOR SPOOK HILL FRS
 983          HC       3
              *
              * DDM   ***** Updated *****

 984          KK    380A
 985          KM   SUB-BASIN 380A
 986          KM   24-HOUR SCS TYPE II RAINFALL WAS USED TO FIND TC & R FOR THIS BASIN
 987          KM   THIS BASIN USED RAINFALL REDUCTION FACTOR OF  .998
 988          KM     L =  .66  Kb = .076  Adj. Slope =   91.0
 989          BA    .261
 990          LG    .170    .250   4.100    .710  21.000
 991          UC    .425    .221
 992          UA       0       3       5       8      12      20      43      75      90      96
 993          UA     100
              *
              * DDM   ***** Preserved *****

 994          KK   C380A
 995          KM   HYDROGRAPH COMBINATION FOR SPOOK HILL FRS
 996          HC       2
              *
              * DDM   ***** Updated *****

 997          KK    400A
 998          KM   SUB-BASIN 400A
 999          KM   24-HOUR SCS TYPE II RAINFALL WAS USED TO FIND TC & R FOR THIS BASIN
1000          KM   THIS BASIN USED RAINFALL REDUCTION FACTOR OF 1.000
1001          KM     L =  .28  Kb = .094  Adj. Slope =   71.0
1002          BA    .048
1003          LG    .250    .290   4.000    .640    .000
1004          UC    .317    .211
1005          UA       0       3       5       8      12      20      43      75      90      96
1006          UA     100
              *
              * DDM   ***** Preserved *****
1                                        HEC-1 INPUT                                          PAGE 27

LINE          ID.......1.......2.......3.......4.......5.......6.......7.......8.......9......10
```

```
1007          KK   C400A
1008          KM   HYDROGRAPH COMBINATION FOR SPOOK HILL FRS
1009          HC       2
              *

1010          KK     370
1011          KM   SUB-BASIN 370
1012          KM   24-HOUR SCS TYPE II RAINFALL WAS USED TO FIND TC & R FOR THIS BASIN
1013          KM   THIS BASIN USED RAINFALL REDUCTION FACTOR OF  .996
1014          KM     L = 1.90  Kb = .044  Adj. Slope =  203.5
1015          BA    .672
1016          LG    .340    .320   4.650    .330   8.000
1017          UC    .404    .284
1018          UA       0       3       5       8      12      20      43      75      90      96
1019          UA     100
              *

1020          KK    S370
1021          KM   Online Detention Basin at Madrid Subdivision
1022          KM   Basin Bottom Elevation = 1822.9 ft
1023          KM   Route through 24" pipe for 404 low flow and
1024          KM   Route through 72" pipe to west along McDowell
1025          KM   2-8'x3' RCBC as emergency spillway
1026          RS       1    STOR       0
1027          SV       0    1.37    3.61    5.97    8.46   11.07   13.81   16.69   19.72
1028          SE     0.9     2.0     3.0     4.0     5.0     6.0     7.0     8.0     9.0
1029          SQ     0.0      98     157     221     270     313     350     380     800
              *

1030          KK    D370
1031          KM   Split the out flow to pipe along McDowell Road and to Madrid subdivision
1032          DT   B370W
1033          DI     0.0      98     157     221     270     313     350     380     800
1034          DQ       0      89     141     199     243     282     315     340     380
              *

1035          KK   R370S
1036          KM   CHANNEL GEOMETRY OBTAINED FROM 2' CONTOUR MAPPING.
1037          KM   ROUTING FLOW to SUB-BASINS 380B1
1038          RS      12    FLOW      -1
1039          RC    .045    .035    .045    8800    .023
1040          RX       0       1      40      46      56      62     102     103
1041          RY       3       2       2       0       0       2       2       3
              *

1042          KK   380B1
1043          KM   SUB-BASIN 380B1
1044          KM   24-HOUR SCS TYPE II RAINFALL WAS USED TO FIND TC & R FOR THIS BASIN
1045          KM   THIS BASIN USED RAINFALL REDUCTION FACTOR OF  .998
1046          KM     L = 1.61  Kb = .047  Adj. Slope =  124.0
1047          BA    .369
1048          LG    .300    .250   4.200    .520  16.000
1049          UC    .471    .414
1050          UA       0       5      16      30      65      77      84      90      94      97
```



```
LINE          ID.......1.......2.......3.......4.......5.......6.......7.......8.......9......10

1051          UA     100
              *

1052          KK  D380B1
1053          KM        DIVERT FLOW INTO ONLINE  DETENTION BASIN
1054          KM   DETENTION/RETENTION BASINS LOCATED WITHIN MESA HIGHLANDS
1055          KM        MAXIMUM VOLUME DIVERSION = 10.5 acre-feet
1056          DT  B380B1    10.5
1057          DI       0   10000
1058          DQ       0   10000
              *

1059          KK  T380B1
1060          KM   RETRIEVE FLOW FROM DIVERSION INTO ONLINE BASIN
1061          DR  B380B1
              *

1062          KK  S380B1
1063          KM   RETRIEVE FLOW INTO FICTICIOUS BASIN AND BLEED OFF WITHIN 36 HOURS.
1064          KM    10.5 ACRE-FEETx43560/36x3600=3.5cfs
1065          RS       1    STOR       0
1066          SV       0     .01    10.5    20.0
1067          SQ       0     1.0     3.5    50.0
              *
```

```
1068          KK  C380B1
1069          KM   HYDROGRAPH COMBINATION
1070          HC       3
              *

1071          KK  R380B1
1072          KM   CHANNEL GEOMETRY OBTAINED FROM 2' CONTOUR MAPPING.
1073          KM   ROUTING OF FLOW FROM SUB-BASINS 380B1 TO SUB-BASIN 400B1.
1074          RS       7    FLOW      -1
1075          RC    .045    .035    .045    2600    .023
1076          RX       0       1      40      46      56      62     102     103
1077          RY       3       2       2       0       0       2       2       3
              *
              * DDM   ***** Updated *****

1078          KK   400B1
1079          KM   SUB-BASIN 400B1
1080          KM   24-HOUR SCS TYPE II RAINFALL WAS USED TO FIND TC & R FOR THIS BASIN
1081          KM   THIS BASIN USED RAINFALL REDUCTION FACTOR OF  .998
1082          KM     L =  .93  Kb = .057  Adj. Slope =   91.0
1083          BA    .385
1084          LG    .280    .250   4.100    .590  12.000
1085          UC    .433    .238
1086          UA       0       5      16      30      65      77      84      90      94      97
1087          UA     100
              *
              * DDM   ***** Preserved *****
1                                   HEC-1 INPUT                                          PAGE 29

LINE          ID.......1.......2.......3.......4.......5.......6.......7.......8.......9......10


1088          KK  D400B1
1089          KM        DIVERT FLOW INTO ONLINE  DETENTION BASIN
1090          KM   DETENTION/RETENTION BASIN LOCATED WITHIN SAGUARO VISTA SUBDIVISION
1091          KM        MAXIMUM VOLUME DIVERSION = 5.6 ACRE-FEET
1092          DT  B400B1     5.6
1093          DI       0   10000
1094          DQ       0   10000
              * DDM   ***** Preserved *****

1095          KK  T400B1
1096          KM   RETRIEVE FLOW FROM DIVERSION INTO ONLINE BASIN
1097          DR  B400B1
              * DDM   ***** Preserved *****

1098          KK  S400B1
1099          KM   RETRIEVE FLOW INTO FICTICIOUS BASIN AND BLEED OFF WITHIN 36 HOURS.
1100          KM     5.6 ACRE-FEETx43560/36x3600 = 2 cfs
1101          RS       1    STOR       0
1102          SV       0     .01     5.6    10.0
1103          SQ       0       1       2    20.0
              * DDM   ***** Preserved *****

1104          KK  C400B1
1105          KM   HYDROGRAPH COMBINATION FOR SPOOK HILL FRS
1106          HC       2
              * DDM   ***** Preserved *****

1107          KK  CC400B
1108          KM   HYDROGRAPH COMBINATION FOR SPOOK HILL FRS
1109          HC       3
              *
              * DDM   ***** Updated *****

1110          KK   420A2
1111          KM   SUB-BASIN 420A2
1112          KM   24-HOUR SCS TYPE II RAINFALL WAS USED TO FIND TC & R FOR THIS BASIN
1113          KM   THIS BASIN USED RAINFALL REDUCTION FACTOR OF 1.000
1114          KM     L =  .26  Kb = .064  Adj. Slope =   96.0
1115          BA    .022
1116          LG    .350    .350   4.150    .430    .000
1117          UC    .208    .194
1118          UA       0       5      16      30      65      77      84      90      94      97
1119          UA     100
              *
              * DDM   ***** Preserved *****

1120          KK  C400A2
1121          KM   HYDROGRAPH COMBINATION FOR SPOOK HILL FRS
1122          HC       2
              *
1                                   HEC-1 INPUT                                          PAGE 30
```

```
LINE          ID.......1.......2.......3.......4.......5.......6.......7.......8.......9......10

1123          KK   T370W
1124          KM   RETRIEVE FLOW FROM DIVERSION of ONLINE BASIN
1125          DR   B370W
              *

1126          KK   R370W
1127          KM   ROUTING OF FLOW FROM SUB-BASINS 370W TO Hawes along McDowell.
1128          RS       5    FLOW      -1
1129          RC    .045    .035    .045    3200    .023
1130          RX       0       1      40      46      56      62     102     103
1131          RY       3       2       2       0       0       2       2       3
              *

1132          KK    395A
1133          KM   SUB-BASIN 395A
1134          KM   24-HOUR SCS TYPE II RAINFALL WAS USED TO FIND TC & R FOR THIS BASIN
1135          KM   THIS BASIN USED RAINFALL REDUCTION FACTOR OF  .999
1136          KM     L = 1.48  Kb = .051  Adj. Slope =  216.6
1137          BA    .187
1138          LG    .310    .270   4.800    .300   9.000
1139          UC    .358    .421
1140          UA       0       5      16      30      65      77      84      90      94      97
1141          UA     100
              * DDM   ***** Preserved *****

1142          KK  R390C1
1143          KM   Route runoff from subbasin 395A through Thunder Mountain subdivision
1144          KM   to concentration point 390C
1145          KM   CHANNEL GEOMETRY OBTAINED FROM 2' CONTOUR MAPPING.
1146          RS       3    FLOW      -1
1147          RC   0.045   0.035   0.045    1600   0.032
1148          RX       0       5      10      22      40      45      60      90
1149          RY       4       3       2       0       0       2       3       4
              * DDM   ***** Updated *****

1150          KK    395B
1151          KM   SUB-BASIN 395B
1152          KM   24-HOUR SCS TYPE II RAINFALL WAS USED TO FIND TC & R FOR THIS BASIN
1153          KM   THIS BASIN USED RAINFALL REDUCTION FACTOR OF 1.000
1154          KM     L =  .18  Kb = .075  Adj. Slope =  167.0
1155          BA    .004
1156          LG    .300    .250   5.100    .270   5.000
1157          UC    .150    .266
1158          UA       0       5      16      30      65      77      84      90      94      97
1159          UA     100
              * DDM   ***** Preserved *****

1160          KK  R390C2
1161          KM   Route runoff hydrograph from 395B to concentration point 390C in existing
1162          KM   channel along McDowell Road
1163          KM   CHANNEL GEOMETRY OBTAINED FROM 2' CONTOUR MAPPING.
1164          RS       3    FLOW      -1
1165          RC   0.045   0.035   0.045    1380   0.027
1166          RX       0       1       3       6      28      31      34      37
```



```
LINE          ID.......1.......2.......3.......4.......5.......6.......7.......8.......9......10

1167          RY       2       2       1       0       0       1       2       3
              * DDM   ***** Updated *****

1168          KK    390C
1169          KM   SUB-BASIN 390C
1170          KM   24-HOUR SCS TYPE II RAINFALL WAS USED TO FIND TC & R FOR THIS BASIN
1171          KM   THIS BASIN USED RAINFALL REDUCTION FACTOR OF  .999
1172          KM     L =  .53  Kb = .054  Adj. Slope =  162.0
1173          BA    .121
1174          LG    .300    .250   5.300    .290  20.000
1175          UC    .221    .139
1176          UA       0       5      16      30      65      77      84      90      94      97
1177          UA     100
              * DDM   ***** Preserved *****

1178          KK  CP390C
1179          KM   Combine routed hydrographs from 395A, 395B, with runoff hydrograph from
1180          KM   subbasin 390C
1181          HC       3
              * DDM   ***** Preserved *****

1182          KK   TOC-H
1183          KM   Divert into proposed storm drain for Culver-Hawes detention
```

```
1184          KM   basin.  Diversion determined by rating curve.
1185          DT  TO390B
1186          DI       0       8      29      86     244     457    1000
1187          DQ       0       0       0      31     159     342     885
              *
              *

1188          KK    C370
1189          KM   COMBINE FLOWS IN STORMDRAIN ALONG McDOWELL FROM LaMADRID BASIN AND THUNDER
1190          KM   MOUNTAIN BASIN
1191          HC       2    1.30
              *

1192          KK   R390S
1193          KM   Route Flow South to Subbasin 400B3.
1194          RS       2    FLOW      -1
1195          RC    .045    .045    .045    1000    .020
1196          RX       0       1      40      46      56      62     102     103
1197          RY       3       2       2       0       0       2       2       3
              *

1198          KK   400B3
1199          KM   SUB-BASIN 400B3
1200          KM   24-HOUR SCS TYPE II RAINFALL WAS USED TO FIND TC & R FOR THIS BASIN
1201          KM   THIS BASIN USED RAINFALL REDUCTION FACTOR OF 1.000
1202          KM     L =  .26  Kb = .064  Adj. Slope =  135.0
1203          BA    .024
1204          LG    .300    .250   4.500    .430    .000
1205          UC    .183    .161
1206          UA       0       5      16      30      65      77      84      90      94      97
1207          UA     100
              *
1                                          HEC-1 INPUT                                          PAGE 32

LINE          ID.......1.......2.......3.......4.......5.......6.......7.......8.......9......10

1208          KK  D400B3
1209          KM        DIVERT FLOW INTO ONLINE  DETENTION BASIN
1210          KM   DETENTION/RETENTION BASIN LOCATED WITHIN SAGUARO VISTA SUBDIVISION
1211          KM        MAXIMUM VOLUME DIVERSION = 1.6 ACRE-FEET
1212          DT  B400B3     1.6
1213          DI       0   10000
1214          DQ       0   10000
              *

1215          KK  T400B3
1216          KM   RETRIEVE FLOW FROM DIVERSION INTO ONLINE BASIN
1217          DR  B400B3
              *

1218          KK  S400B3
1219          KM   RETRIEVE FLOW INTO FICTICIOUS BASIN AND BLEED OFF WITHIN 36 HOURS.
1220          KM     1.6 ACRE-FEETx43560/36x3600 = 1 cfs
1221          RS       1    STOR       0
1222          SV       0     .01     1.6     5.0
1223          SQ       0       1       1    10.0
              *

1224          KK  C400B3
1225          KM   HYDROGRAPH COMBINATION
1226          HC       2
              *

1227          KK   C390S
1228          KM   HYDROGRAPH COMBINATION of flow fron north of the Basin
1229          HC       2
              *

1230          KK   380B3
1231          KM   SUB-BASIN 380B3
1232          KM   24-HOUR SCS TYPE II RAINFALL WAS USED TO FIND TC & R FOR THIS BASIN
1233          KM   THIS BASIN USED RAINFALL REDUCTION FACTOR OF  .999
1234          KM     L =  .69  Kb = .054  Adj. Slope =  138.0
1235          BA    .123
1236          LG    .300    .250   4.350    .480  16.000
1237          UC    .279    .220
1238          UA       0       5      16      30      65      77      84      90      94      97
1239          UA     100
              *

1240          KK  D380B3
1241          KM        DIVERT FLOW INTO ONLINE  DETENTION BASIN
1242          KM        MAXIMUM VOLUME DIVERSION = 4.0 acre-feet
```

```
1243          DT  B380B3     4.0
1244          DI       0   10000
1245          DQ       0   10000
              *
                                        HEC-1 INPUT                                                    PAGE 33

LINE          ID.......1.......2.......3.......4.......5.......6.......7.......8.......9......10


1246          KK  T380B3
1247          KM   RETRIEVE FLOW FROM DIVERSION INTO ONLINE BASIN
1248          DR  B380B3
              *

1249          KK  S380B3
1250          KM   RETRIEVE FLOW INTO FICTICIOUS BASIN AND BLEED OFF WITHIN 36 HOURS.
1251          KM     4.0 ACRE-FEETx43560/36x3600= 2.cfs
1252          RS       1    STOR       0
1253          SV       0     .01     4.0     6.0
1254          SQ       0     0.5     2.0    20.0
              *

1255          KK  C380B3
1256          KM   HYDROGRAPH COMBINATION
1257          HC       2
              *

1258          KK  D380B3
1259          KM   Subbasin 380B3 is Divided into 3 Smaller Areas
1260          KM   38% to 380B3a, 35% to 380B3b, and 27% to 380B3c
1261          DT  380B3c
1262          DI       0    1000
1263          DQ       0     270
              *

1264          KK  380B3b
1265          KM   Subbasin 380B3 is Divided into 3 Smaller Areas
1266          KM   38% to 380B3a, 35% to 380B3b, and 27% to 380B3c
1267          DT  380B3a
1268          DI       0    1000
1269          DQ       0     520
              *

1270          KK  C380BB
1271          KM   Total Basin Inflows from North and East Areas
1272          HC       2
              *

1273          KK   D380B
1274          KM   DIVERT FLOW INTO OFFLINE DETENTION BASIN LOCATED WITHIN SUB-BASINS
1275          KM   380B3b - Culver/Hawes basin
1276          DT  B38B3b
1277          DI       0      70    5000
1278          DQ       0       0    4930
              *

1279          KK  RT380B
1280          KM   RETRIEVE FLOW FROM DIVERSION
1281          DR  B38B3b
              *
1                                       HEC-1 INPUT                                                    PAGE 34

LINE          ID.......1.......2.......3.......4.......5.......6.......7.......8.......9......10


1282          KK   S380B
1283          KM   RETRIEVE FLOW INTO OFFLINE BASIN AND BLEED OFF WITHIN 36 HOURS.
1284          RS       1    STOR       0
1285          SV       0     2.5     5.1    11.0    18.7    28.0    32.0
1286          SE       0     1.0     2.0     4.0     6.0     8.0     9.0
1287          SQ       0     6.2     8.8    15.3    20.0      25     250
              *

1288          KK  CC380B
1289          KM   HYDROGRAPH COMBINATION at outlet of Basin "S380B"
1290          HC       2
              *

1291          KK  R38B3b
1292          KM   ROUTING OF FLOW FROM BASIN TO SUB-BASIN 380B3c
1293          RS       3    FLOW      -1
1294          RC    .045    .035    .045    1300    .020
1295          RX       0       1      40      46      56      62     102     103
1296          RY       3       2       2       0       0       2       2       3
```

```
                *

1297            KK  T38B3a
1298            KM   RETRIEVE FLOW FROM DIVERSION of 380B3a
1299            DR  380B3a
                *

1300            KK  R38B3a
1301            KM   ROUTING OF FLOW FROM SUB-BASINS 380B3a TO SUB-BASIN 380B3c.
1302            RS       3    FLOW      -1
1303            RC    .045    .035    .045    1800    .020
1304            RX       0       1      40      46      56      62     102     103
1305            RY       3       2       2       0       0       2       2       3
                *

1306            KK  T38B3c
1307            KM   RETRIEVE FLOW FROM DIVERSION of 380B3c
1308            DR  380B3c
                *

1309            KK  C38B3c
1310            KM   HYDROGRAPH COMBINATION of 380B3c, 380B3a and flow from the Basin
1311            HC       3
                *

1312            KK  R380B3
1313            KM   ROUTING OF FLOW FROM SUB-BASINS 380B3c TO SUB-BASIN 380B2.
1314            RS       4    FLOW      -1
1315            RC    .045    .035    .045    2500    .020
1316            RX       0       1      40      46      56      62     102     103
1317            RY       3       2       2       0       0       2       2       3
                *
1                                          HEC-1 INPUT                                                    PAGE 35

LINE            ID.......1.......2.......3.......4.......5.......6.......7.......8.......9......10

1318            KK   380B2
1319            KM   SUB-BASIN 380B2
1320            KM   24-HOUR SCS TYPE II RAINFALL WAS USED TO FIND TC & R FOR THIS BASIN
1321            KM   THIS BASIN USED RAINFALL REDUCTION FACTOR OF  .999
1322            KM     L =  .55  Kb = .055  Adj. Slope =  136.0
1323            BA    .096
1324            LG    .300    .250   3.950    .580  15.000
1325            UC    .250    .187
1326            UA       0       5      16      30      65      77      84      90      94      97
1327            UA     100
                *

1328            KK  C380B2
1329            KM   HYDROGRAPH COMBINATION
1330            HC       2
                *

1331            KK  R380B2
1332            KM   CHANNEL GEOMETRY OBTAINED FROM 2' CONTOUR MAPPING.
1333            KM   ROUTING OF FLOW FROM SUB-BASINS 380B2 TO SUB-BASIN 400B2.
1334            RS       9    FLOW      -1
1335            RC    .045    .035    .045    4000    .018
1336            RX       0       1      40      46      56      62     102     103
1337            RY       3       2       2       0       0       2       2       3
                *

1338            KK   400B2
1339            KM   SUB-BASIN 400B2
1340            KM   24-HOUR SCS TYPE II RAINFALL WAS USED TO FIND TC & R FOR THIS BASIN
1341            KM   THIS BASIN USED RAINFALL REDUCTION FACTOR OF  .999
1342            KM     L =  .93  Kb = .051  Adj. Slope =  118.0
1343            BA    .194
1344            LG    .300    .250   4.150    .530    .000
1345            UC    .363    .288
1346            UA       0       5      16      30      65      77      84      90      94      97
1347            UA     100
                *

1348            KK  C400B2
1349            KM   HYDROGRAPH COMBINATION
1350            HC       2
                *

1351            KK  R400B2
1352            KM   CHANNEL GEOMETRY OBTAINED FROM 2' CONTOUR MAPPING.
1353            KM   ROUTING OF FLOW FROM SUB-BASINS 400B2 TO SUB-BASIN 420A1.
1354            RS       3    FLOW      -1
```

```
1355          RC    .045    .035    .045    1800    .018
1356          RX       0       1      40      46      56      62     102     103
1357          RY       3       2       2       0       0       2       2       3
              *
                                          HEC-1 INPUT                                                    PAGE 36

LINE          ID.......1.......2.......3.......4.......5.......6.......7.......8.......9......10


1358          KK   420A1
1359          KM   SUB-BASIN 420A1
1360          KM   24-HOUR SCS TYPE II RAINFALL WAS USED TO FIND TC & R FOR THIS BASIN
1361          KM   THIS BASIN USED RAINFALL REDUCTION FACTOR OF  .997
1362          KM     L = 1.20  Kb = .044  Adj. Slope =  108.0
1363          BA    .566
1364          LG    .300    .270   4.250    .480  17.000
1365          UC    .387    .207
1366          UA       0       5      16      30      65      77      84      90      94      97
1367          UA     100
              *

1368          KK  D420A1
1369          KM        DIVERT FLOW INTO ONLINE  DETENTION BASIN
1370          KM   DETENTION/RETENTION BASINS LOCATED WITHIN GRAY FOX SUBDIVISION
1371          KM        MAXIMUM VOLUME DIVERSION = 11.2 acre-feet
1372          DT  B420A1    11.2
1373          DI       0   10000
1374          DQ       0   10000
              *

1375          KK  T420A1
1376          KM   RETRIEVE FLOW FROM DIVERSION INTO ONLINE BASIN
1377          DR  B420A1
              *

1378          KK  S420A1
1379          KM   RETRIEVE FLOW INTO FICTICIOUS BASIN AND BLEED OFF WITHIN 36 HOURS.
1380          KM    11.2 ACRE-FEETx43560/36x3600= 4cfs
1381          RS       1    STOR       0
1382          SV       0     .01    11.2      20
1383          SQ       0     1.0     4.0      40
              *

1384          KK   C420A
1385          KM   HYDROGRAPH COMBINATION FOR SPOOK HILL FRS
1386          HC       4
              * DDM   ***** Preserved *****

1387          KK   R390B
1388          KM   Retrive Flows diverted from CP390C to existing Thunder Mountain detention
1389          KM   basin
1390          DR  TO390B

1391          KK  R390B1
1392          KM   CHANNEL GEOMETRY OBTAINED FROM 2' CONTOUR MAPPING.
1393          RS       3    FLOW      -1
1394          RC   0.020   0.020   0.020     430   0.019
1395          RX       0       3       6       9      26      30      34      38
1396          RY       3       2       1       0       0       1       2       3
              * DDM   ***** Updated *****
1                                         HEC-1 INPUT                                                    PAGE 37

LINE          ID.......1.......2.......3.......4.......5.......6.......7.......8.......9......10


1397          KK    385C
1398          KM   SUB-BASIN 385C
1399          KM   24-HOUR SCS TYPE II RAINFALL WAS USED TO FIND TC & R FOR THIS BASIN
1400          KM   THIS BASIN USED RAINFALL REDUCTION FACTOR OF  .997
1401          KM     L = 2.16  Kb = .039  Adj. Slope =  303.2
1402          BA    .501
1403          LG    .280    .380   5.600    .200  13.000
1404          UC    .333    .300
1405          UA       0       5      16      30      65      77      84      90      94      97
1406          UA     100
              * DDM   ***** Updated *****

1407          KK    385B
1408          KM   SUB-BASIN 385B
1409          KM   24-HOUR SCS TYPE II RAINFALL WAS USED TO FIND TC & R FOR THIS BASIN
1410          KM   THIS BASIN USED RAINFALL REDUCTION FACTOR OF 1.000
1411          KM     L =  .82  Kb = .057  Adj. Slope =  280.2
1412          BA    .077
1413          LG    .340    .330   5.200    .250   6.000
```

```
1414          UC    .242    .281
1415          UA       0       5      16      30      65      77      84      90      94      97
1416          UA     100
              * DDM   ***** Updated *****

1417          KK    385A
1418          KM   SUB-BASIN 385A
1419          KM   24-HOUR SCS TYPE II RAINFALL WAS USED TO FIND TC & R FOR THIS BASIN
1420          KM   THIS BASIN USED RAINFALL REDUCTION FACTOR OF 1.000
1421          KM     L =  .37  Kb = .065  Adj. Slope =  207.0
1422          BA    .018
1423          LG    .300    .250   4.150    .530  15.000
1424          UC    .196    .270
1425          UA       0       5      16      30      65      77      84      90      94      97
1426          UA     100
              * DDM   ***** Updated *****

1427          KK    415B
1428          KM   SUB-BASIN 415B
1429          KM   24-HOUR SCS TYPE II RAINFALL WAS USED TO FIND TC & R FOR THIS BASIN
1430          KM   THIS BASIN USED RAINFALL REDUCTION FACTOR OF  .998
1431          KM     L = 1.20  Kb = .049  Adj. Slope =  303.2
1432          BA    .276
1433          LG    .300    .250   5.000    .330  24.000
1434          UC    .262    .202
1435          UA       0       5      16      30      65      77      84      90      94      97
1436          UA     100

1437          KK  CP415B
1438          KM   Combine hydrographs from 385C and 385B with runoff hydrographs from 385A
1439          KM   and 415B
1440          HC       4
              *
1                                   HEC-1 INPUT                                          PAGE 38

LINE          ID.......1.......2.......3.......4.......5.......6.......7.......8.......9......10


1441          KK   D415B
1442          KM   DIVERT FLOW INTO OFFLINE DETENTION BASIN
1443          KM   MAXIMUM STORAGE VOLUME FOR DIVERSION = 32 AC-FT @ 5' DEPTH.
1444          DT  BS415B
1445          DI       0     150    5000
1446          DQ       0       0    4850
              *
              * DDM   ***** Preserved *****

1447          KK  RT415B
1448          KM   RETRIEVE FLOW FROM DIVERSION INTO OFFLINE BASIN
1449          DR  BS415B
              *
              * DDM   ***** Preserved *****

1450          KK   S415B
1451          KM   RETRIEVE FLOW INTO OFFLINE BASIN AND BLEED OFF WITHIN 36 HOURS.
1452          KM      32 ACRE-FEETx43560/36x3600 = 11cfs
1453          RS       1    STOR       0
1454          SV       0     .01      32      40
1455          SQ       0       5      50      60
              * DDM   ***** Preserved *****

1456          KK  CC415B
1457          KM   HYDROGRAPH COMBINATION OF 415 DIVERSION.
1458          HC       2
              * DDM   ***** Preserved *****

1459          KK  R390A1
1460          KM   Route runoff hydrograph from subbasin 385B to CP390A
1461          KM   CHANNEL GEOMETRY OBTAINED FROM 2' CONTOUR MAPPING.
1462          RS       3    FLOW      -1
1463          RC   0.045   0.035   0.045    1700   0.033
1464          RX       0      14      22      29      36      44      52     109
1465          RY       4       2       1       0       0       1       2       4
              * DDM   ***** Updated *****

1466          KK    390A
1467          KM   SUB-BASIN 390A
1468          KM   24-HOUR SCS TYPE II RAINFALL WAS USED TO FIND TC & R FOR THIS BASIN
1469          KM   THIS BASIN USED RAINFALL REDUCTION FACTOR OF 1.000
1470          KM     L =  .36  Kb = .064  Adj. Slope =  164.0
1471          BA    .024
1472          LG    .300    .250   4.000    .560  15.000
1473          UC    .204    .235
1474          UA       0       5      16      30      65      77      84      90      94      97
```

```
1475          UA     100
              * DDM   ***** Preserved *****
1                                   HEC-1 INPUT                                                    PAGE 39

LINE          ID.......1.......2.......3.......4.......5.......6.......7.......8.......9......10


1476          KK  CP390A
1477          KM   Combine routed hydrographs from the Oak Street detention basin with
1478          KM   runoff hydrograph from subbasin 390A
1479          HC       2
              * DDM   ***** Preserved *****

1480          KK  R390B2
1481          KM   Route combined hydrograph from CP390A to existing Thunder Mountain detention
1482          KM   basin
1483          KM   CHANNEL GEOMETRY OBTAINED FROM 2' CONTOUR MAPPING
1484          RS       3    FLOW      -1
1485          RC   0.020   0.020   0.020    1610   0.019
1486          RX       0       2       3       4      17      19      23      30
1487          RY     3.5       2       1       0       0       1       2     3.5
              * DDM   ***** Updated *****

1488          KK    390B
1489          KM   SUB-BASIN 390B
1490          KM   24-HOUR SCS TYPE II RAINFALL WAS USED TO FIND TC & R FOR THIS BASIN
1491          KM   THIS BASIN USED RAINFALL REDUCTION FACTOR OF  .999
1492          KM     L =  .68  Kb = .055  Adj. Slope =  153.0
1493          BA    .101
1494          LG    .300    .250   4.450    .450  15.000
1495          UC    .267    .232
1496          UA       0       5      16      30      65      77      84      90      94      97
1497          UA     100
              * DDM   ***** Preserved *****

1498          KK  CP390B
1499          KM   Combine routed hydrographs from CP390C and CP390A with runoff hydrograph from
1500          KM   subbasin 390B
1501          HC       3   1.31
              * DDM   ***** Preserved *****

1502          KK   S390B
1503          KM   Thunder Mountain Detention Basin, with 78-inch outlet pipe, discharge from
1504          KM   the basin can be through the pipe and out of 32-6 ft x 0.65 ft holes in
1505          KM   the wall at the southwest corner of the basin the lowest hole is at
1506          KM   elevation 1759.27 feet
1507          RS       1    STOR       0
1508          SV       0    0.01    0.45    1.77    4.38    8.09   12.61   18.16   24.98
1509          SQ       0     325     400     460     676    1450    1958    2321    2615
1510          SE    1753    1754    1756    1758    1760    1762    1764    1766    1768
              * DDM   ***** Updated *****

1511          KK  420B05
1512          KM   SUB-BASIN 420B05
1513          KM   24-HOUR SCS TYPE II RAINFALL WAS USED TO FIND TC & R FOR THIS BASIN
1514          KM   THIS BASIN USED RAINFALL REDUCTION FACTOR OF 1.000
1515          KM     L =  .41  Kb = .061  Adj. Slope =  159.0
1516          BA    .040
1517          LG    .300    .250   4.650    .390  15.000
1518          UC    .213    .204
1519          UA       0       5      16      30      65      77      84      90      94      97
1                                   HEC-1 INPUT                                                    PAGE 40

LINE          ID.......1.......2.......3.......4.......5.......6.......7.......8.......9......10

1520          UA     100
              * DDM   ***** Preserved *****

1521          KK  CPSD05
1522          KM   Combine routed flow in storm drain from Thunder Mountain Detention basin
1523          KM   with runoff from subbasin 420B05
1524          HC       2
              * DDM   ***** Updated *****

1525          KK  420B10
1526          KM   SUB-BASIN 420B10
1527          KM   24-HOUR SCS TYPE II RAINFALL WAS USED TO FIND TC & R FOR THIS BASIN
1528          KM   THIS BASIN USED RAINFALL REDUCTION FACTOR OF 1.000
1529          KM     L =  .49  Kb = .063  Adj. Slope =  159.0
1530          BA    .025
1531          LG    .300    .250   3.850    .620  15.000
1532          UC    .242    .354
1533          UA       0       5      16      30      65      77      84      90      94      97
1534          UA     100
```

```
                * DDM   ***** Preserved *****

1535            KK  CPSD10
1536            KM   Combine routed flow in storm drain from CPSD05 with runoff from subbasin
1537            KM   420B10
1538            HC       2
                * DDM   ***** Updated *****

1539            KK  420B15
1540            KM   SUB-BASIN 420B15
1541            KM   24-HOUR SCS TYPE II RAINFALL WAS USED TO FIND TC & R FOR THIS BASIN
1542            KM   THIS BASIN USED RAINFALL REDUCTION FACTOR OF 1.000
1543            KM     L =  .36  Kb = .068  Adj. Slope =  133.0
1544            BA    .011
1545            LG    .300    .250   3.850    .620  15.000
1546            UC    .229    .416
1547            UA       0       5      16      30      65      77      84      90      94      97
1548            UA     100
                * DDM   ***** Preserved *****

1549            KK  CPSD15
1550            KM   Combine routed flow in storm drain from CPSD10 with runoff from subbasin
1551            KM   420B15
1552            HC       2
                * DDM   ***** Updated *****

1553            KK  420B20
1554            KM   SUB-BASIN 420B20
1555            KM   24-HOUR SCS TYPE II RAINFALL WAS USED TO FIND TC & R FOR THIS BASIN
1556            KM   THIS BASIN USED RAINFALL REDUCTION FACTOR OF 1.000
1557            KM     L =  .48  Kb = .067  Adj. Slope =  144.0
1558            BA    .014
1559            LG    .300    .250   4.200    .520  15.000
1560            UC    .254    .512
1561            UA       0       5      16      30      65      77      84      90      94      97
1562            UA     100
                * DDM   ***** Preserved *****
1                                   HEC-1 INPUT                                          PAGE 41

LINE            ID.......1.......2.......3.......4.......5.......6.......7.......8.......9......10


1563            KK  CPSD20
1564            KM   Combine routed flow in storm drain from CPSD15 with runoff from subbasin
1565            KM   420B20
1566            HC       2
                * DDM   ***** Updated *****

1567            KK  420B25
1568            KM   SUB-BASIN 420B25
1569            KM   24-HOUR SCS TYPE II RAINFALL WAS USED TO FIND TC & R FOR THIS BASIN
1570            KM   THIS BASIN USED RAINFALL REDUCTION FACTOR OF  .999
1571            KM     L = 1.90  Kb = .056  Adj. Slope =  203.5
1572            BA    .084
1573            LG    .300    .250   3.880    .610  15.000
1574            UC    .496   1.165
1575            UA       0       3       5       8      12      20      43      75      90      96
1576            UA     100

1577            KK  SFIRES
1578            KM   Detention basin at Mesa Fire Station #16 at NW corner of McDowell Rd. and
1579            KM   80th Street.  Detention volumes taken from as-built plans dated 5/22/00,
1580            KM   prepared by AGRA Infrastructure, Inc.
1581            RS       1    STOR       0
1582            SV       0    0.03    0.14    0.37    0.53    0.73
1583            SQ       0       7      17      25      27      31
1584            SE      92      93      94      95      96      97
                * DDM   ***** Preserved *****

1585            KK  CPSD25
1586            KM   Combine routed flow in storm drain from CPSD20 with runoff from subbasin
1587            KM   420B25
1588            HC       2
                * DDM   ***** Updated *****

1589            KK  420B30
1590            KM   SUB-BASIN 420B30
1591            KM   24-HOUR SCS TYPE II RAINFALL WAS USED TO FIND TC & R FOR THIS BASIN
1592            KM   THIS BASIN USED RAINFALL REDUCTION FACTOR OF 1.000
1593            KM     L =  .87  Kb = .059  Adj. Slope =  144.0
1594            BA    .055
1595            LG    .300    .250   4.400    .460  15.000
1596            UC    .342    .525
1597            UA       0       5      16      30      65      77      84      90      94      97
```

```
1598          UA     100
              * DDM   ***** Preserved *****

1599          KK  CPSD30
1600          KM   Combine routed flow in storm drain from CPSD25 with runoff from subbasin
1601          KM   420B30
1602          HC       2
              * DDM   ***** Updated *****
1                                        HEC-1 INPUT                                                    PAGE 42

LINE          ID.......1.......2.......3.......4.......5.......6.......7.......8.......9......10


1603          KK  420B35
1604          KM   SUB-BASIN 420B35
1605          KM   24-HOUR SCS TYPE II RAINFALL WAS USED TO FIND TC & R FOR THIS BASIN
1606          KM   THIS BASIN USED RAINFALL REDUCTION FACTOR OF 1.000
1607          KM     L =  .40  Kb = .062  Adj. Slope =  112.0
1608          BA    .035
1609          LG    .300    .260   3.530    .770  15.000
1610          UC    .246    .253
1611          UA       0       5      16      30      65      77      84      90      94      97
1612          UA     100

1613          KK  SCHRCH
1614          KM   Detention basin at Falcon Hill Ward Church of Jesus Christ of Latter-
1615          KM   Day Saints at NW corner of McDowell Rd. and 78th Street.  Detention
1616          KM   volumes taken from as-built plans dated 7-22-03, prepared by Rosendahl
1617          KM   & Associates, Inc.
1618          RS       1    STOR       0
1619          SV       0    0.09    0.23    0.49    0.66    0.71    0.84
1620          SQ       0     1.4     2.2     5.5     6.0     6.4     157
1621          SE    1663    1664    1665    1666  1666.5    1667    1668
              * DDM   ***** Preserved *****

1622          KK  CPSD35
1623          KM   Combine routed flow in storm drain from CPSD30 with runoff from subbasin
1624          KM   420B35
1625          HC       2
              * DDM   ***** Updated *****

1626          KK  420B40
1627          KM   SUB-BASIN 420B40
1628          KM   24-HOUR SCS TYPE II RAINFALL WAS USED TO FIND TC & R FOR THIS BASIN
1629          KM   THIS BASIN USED RAINFALL REDUCTION FACTOR OF 1.000
1630          KM     L =  .17  Kb = .073  Adj. Slope =  118.0
1631          BA    .005
1632          LG    .300    .260   3.700    .680  15.000
1633          UC    .171    .258
1634          UA       0       5      16      30      65      77      84      90      94      97
1635          UA     100
              * DDM   ***** Preserved *****

1636          KK  CPSD40
1637          KM   Combine routed flow in storm drain from CPSD35 with runoff from subbasin
1638          KM   420B40
1639          HC       2
              * DDM   ***** Updated *****

1640          KK  420B45
1641          KM   SUB-BASIN 420B45
1642          KM   24-HOUR SCS TYPE II RAINFALL WAS USED TO FIND TC & R FOR THIS BASIN
1643          KM   THIS BASIN USED RAINFALL REDUCTION FACTOR OF 1.000
1644          KM     L =  .25  Kb = .071  Adj. Slope =  120.0
1645          BA    .007
1646          LG    .300    .260   3.630    .710  15.000
1647          UC    .204    .354
1                                        HEC-1 INPUT                                                    PAGE 43

LINE          ID.......1.......2.......3.......4.......5.......6.......7.......8.......9......10

1648          UA       0       5      16      30      65      77      84      90      94      97
1649          UA     100
              * DDM   ***** Preserved *****

1650          KK  CPSD45
1651          KM   Combine routed flow in storm drain from CPSD40 with runoff from subbasin
1652          KM   420B45
1653          HC       2
              * DDM   ***** Preserved *****

1654          KK  TOLSCH
1655          KO       3
1656          KM   Divert out of storm drain through splitter structure.  Divert flow amount
```

```
1657          KM   such that the flow at CP415A is less than or equal to 1540 cfs, the existing
1658          KM peak discharge of LasSendas channel.\
1659          DT    MCDB
1660          DI       0     331     419     558     658     693     728     901    1043
1661          DQ       0       0      61     176     262     292     323     473     594
              * DDM   ***** Updated *****

1662          KK     440
1663          KM   SUB-BASIN 440
1664          KM   24-HOUR SCS TYPE II RAINFALL WAS USED TO FIND TC & R FOR THIS BASIN
1665          KM   THIS BASIN USED RAINFALL REDUCTION FACTOR OF 1.000
1666          KM     L =  .40  Kb = .039  Adj. Slope =  315.0
1667          BA    .080
1668          LG    .190    .380   6.400    .140  13.000
1669          UC    .129    .077
1670          UA       0       3       5       8      12      20      43      75      90      96
1671          UA     100
              * DDM   ***** Preserved *****

1672          KK     R70
1673          KM   ROUTE FLOW FROM SUB-BASIN 440 TO C108
1674          RS       2    FLOW      -1
1675          RC     .05    .035     .05    2250     .08
1676          RX    1000    1025    1050    1070    1075    1095    1120    1145
1677          RY      30    22.9    15.7      10      10    15.7    22.9      30
              * DDM   ***** Updated *****

1678          KK     441
1679          KM   SUB-BASIN 441
1680          KM   24-HOUR SCS TYPE II RAINFALL WAS USED TO FIND TC & R FOR THIS BASIN
1681          KM   THIS BASIN USED RAINFALL REDUCTION FACTOR OF 1.000
1682          KM     L =  .28  Kb = .069  Adj. Slope =  315.0
1683          BA    .010
1684          LG    .300    .250   5.600    .220   5.000
1685          UC    .150    .225
1686          UA       0       5      16      30      65      77      84      90      94      97
1687          UA     100
              * DDM   ***** Preserved *****
```



```
LINE          ID.......1.......2.......3.......4.......5.......6.......7.......8.......9......10

1688          KK    C108
1689          KM   COMBINE HYDROGRAPHS FROM SUB-BASINS 440 & 441
1690          HC       2
              * DDM   ***** Preserved *****

1691          KK      D4
1692          KM        SPLIT FLOW WITH TWO 42 INCH PIPES TO WEST AND SOUTH
1693          DT   SPLIT
1694          DI       0      14      40      82     120     154     180
1695          DQ       0       7      20      41      60      77      90
              * DDM   ***** Preserved *****

1696          KK    R108
1697          KM        ROUTE FLOW FROM SUB-BASIN C108 TO C67
1698          RS       2    FLOW      -1
1699          RC     .05    .035     .05    3200      .1
1700          RX    1000    1025    1050    1070    1075    1095    1120    1145
1701          RY      30    22.9    15.7      10      10    15.7    22.9      30
              * DDM   ***** Updated *****

1702          KK     442
1703          KM   SUB-BASIN 442
1704          KM   24-HOUR SCS TYPE II RAINFALL WAS USED TO FIND TC & R FOR THIS BASIN
1705          KM   THIS BASIN USED RAINFALL REDUCTION FACTOR OF  .999
1706          KM     L =  .83  Kb = .055  Adj. Slope =  274.2
1707          BA    .100
1708          LG    .300    .270   3.290    .770   5.000
1709          UC    .258    .264
1710          UA       0       5      16      30      65      77      84      90      94      97
1711          UA     100
              * DDM   ***** Preserved *****

1712          KK     C67
1713          KM   COMBINE FLOW FROM SUB-BASIN 442 & DIV4
1714          HC       2
              * DDM   ***** Preserved *****

1715          KK      D6
1716          KM        OFFLINE BASIN WITH 25 FOOT WEIR SET AT 2.5 FEET ABOVE BOTTOM OF CHANNEL
1717          KM        FLOW CONTINUES BEYOND BASIN THROUGH 2-30" PIPES
1718          DT  BASIN4     3.3
```

```
1719          DI       0      10      32      44    79.9   132.5     198   272.9   356.8
1720          DQ       0       0       0       0    23.9    67.5     124   190.9   266.8
              * DDM   ***** Preserved *****

1721          KK    RTD6
1722          KM   RETRIEVE FLOW FROM DIVERSION INTO OFFLINE BASIN
1723          DR  BASIN4
              * DDM   ***** Preserved *****
1                                        HEC-1 INPUT                                                    PAGE 45

LINE          ID.......1.......2.......3.......4.......5.......6.......7.......8.......9......10


1724          KK     SD6
1725          KM   RETRIEVE FLOW INTO FICTICIOUS BASIN AND BLEED OFF WITHIN 36 HOURS.
1726          KM     3.3 ACRE-FEETx43560/36x3600=1.1cfs
1727          RS       1    STOR       0
1728          SV       0     .01     3.3
1729          SQ       0     0.2     1.1
              * DDM   ***** Preserved *****

1730          KK     CD6
1731          KM   HYDROGRAPH COMBINATION FOR OFFLINE BASIN BLEEDOFF
1732          HC       2
              * DDM   ***** Updated *****

1733          KK     443
1734          KM   SUB-BASIN 443
1735          KM   24-HOUR SCS TYPE II RAINFALL WAS USED TO FIND TC & R FOR THIS BASIN
1736          KM   THIS BASIN USED RAINFALL REDUCTION FACTOR OF 1.000
1737          KM     L =  .71  Kb = .050  Adj. Slope =  315.0
1738          BA    .080
1739          LG    .250    .190   8.000    .080  10.000
1740          UC    .196    .194
1741          UA       0       5      16      30      65      77      84      90      94      97
1742          UA     100
              * DDM   ***** Preserved *****

1743          KK     D66
1744          KM        DIVERT FLOW INTO 3 NATURAL WASHES WITH ONE 24" PIPE IN EACH WASH.
1745          KM        EACH PIPE CAPACITY BASED ON 4 FEET OF HEAD
1746          DT   WSH66
1747          DI       0      78     100     200
1748          DQ       0      78      78      78
              * DDM   ***** Preserved *****

1749          KK    R113
1750          KM        ROUTE FLOW FROM C113 TO C114
1751          RS       1    FLOW      -1
1752          RC    .019    .019    .019    1300    .029
1753          RX    1000    1004    1008    1012    1018    1022    1026    1030
1754          RY      17   15.33   12.67      10      10   12.67   15.33      17
              * DDM   ***** Preserved *****

1755          KK    C114
1756          KM        COMBINE HYDROGRAPHS FROM SUB-BASIN 67 AND C113
1757          HC       2
              * DDM   ***** Updated *****

1758          KK     444
1759          KM   SUB-BASIN 444
1760          KM   24-HOUR SCS TYPE II RAINFALL WAS USED TO FIND TC & R FOR THIS BASIN
1761          KM   THIS BASIN USED RAINFALL REDUCTION FACTOR OF 1.000
1762          KM     L =  .33  Kb = .034  Adj. Slope =  315.0
1763          BA    .040
1764          LG    .130    .350   4.450    .320   1.000
1765          UC    .112    .084
1                                        HEC-1 INPUT                                                    PAGE 46

LINE          ID.......1.......2.......3.......4.......5.......6.......7.......8.......9......10

1766          UA       0       3       5       8      12      20      43      75      90      96
1767          UA     100
              * DDM   ***** Preserved *****

1768          KK     R58
1769          KM   ROUTE FLOW FROM SUB-BASIN 444 TO C107
1770          RS       2    FLOW      -1
1771          RC     .05    .035     .05    2370   .0516
1772          RX    1000    1010    1020    1050    1055    1085    1095    1105
1773          RY      19      18      17      10      10      17      18      19
              * DDM   ***** Updated *****

1774          KK     445
```

```
1775          KM   SUB-BASIN 445
1776          KM   24-HOUR SCS TYPE II RAINFALL WAS USED TO FIND TC & R FOR THIS BASIN
1777          KM   THIS BASIN USED RAINFALL REDUCTION FACTOR OF  .999
1778          KM     L =  .82  Kb = .036  Adj. Slope =  315.0
1779          BA    .190
1780          LG    .170    .320   3.470    .590   3.000
1781          UC    .192    .130
1782          UA       0       5      16      30      65      77      84      90      94      97
1783          UA     100
              * DDM   ***** Preserved *****

1784          KK    C107
1785          KM   COMBINE HYDROGRAPHS FROM SUB-BASINS 444 & 445
1786          HC       2
              * DDM   ***** Preserved *****

1787          KK    R107
1788          KM        ROUTE FLOW FROM C107 TO C109
1789          RS       2    FLOW      -1
1790          RC     .05    .035     .05     700   .0516
1791          RX    1000    1010    1020    1050    1055    1085    1095    1105
1792          RY      19      18      17      10      10      17      18      19
              * DDM   ***** Preserved *****

1793          KK    RTB2
1794          KM        RETRIEVE DIVERTED FLOW FROM BASIN 1
1795          DR   SPLIT
              * DDM   ***** Preserved *****

1796          KK  RSPLIT
1797          KM        ROUTE FLOW FROM SPLIT TO C109
1798          RS       1    FLOW      -1
1799          RC     .05    .035     .05     800     .05
1800          RX    1000    1025    1050    1070    1075    1095    1120    1145
1801          RY      30    22.9    15.7      10      10    15.7    22.9      30
              * DDM   ***** Updated *****
```



```
LINE          ID.......1.......2.......3.......4.......5.......6.......7.......8.......9......10

1802          KK     446
1803          KM   SUB-BASIN 446
1804          KM   24-HOUR SCS TYPE II RAINFALL WAS USED TO FIND TC & R FOR THIS BASIN
1805          KM   THIS BASIN USED RAINFALL REDUCTION FACTOR OF 1.000
1806          KM     L =  .46  Kb = .061  Adj. Slope =  303.9
1807          BA    .040
1808          LG    .270    .250   4.500    .400  19.000
1809          UC    .183    .189
1810          UA       0       5      16      30      65      77      84      90      94      97
1811          UA     100
              * DDM   ***** Preserved *****

1812          KK    C109
1813          KM        COMBINE HYDROGRAPHS FROM COMBINES C107 AND C108
1814          HC       3
              * DDM   ***** Preserved *****

1815          KK      D5
1816          KM        DIVERT FLOW INTO WASHES TOWARDS WEST
1817          KM        DIVERSION THROUGH 36" PIPE WITH 3 FEET OF HEAD
1818          DT  WSH404
1819          DI       0    40.7    71.2   121.6     190     276   379.4   500.6
1820          DQ       0      35      35      35      35      35      35      35
              * DDM   ***** Preserved *****

1821          KK    R109
1822          KM        ROUTE FLOW FROM C109 TO C110
1823          RS       1    FLOW      -1
1824          RC    .019    .019    .019    3080     .05
1825          RX    1000    1005    1010    1015    1025    1030    1035    1040
1826          RY   13.75    12.5   11.25      10      10   11.25    12.5   13.75
              * DDM   ***** Updated *****

1827          KK     447
1828          KM   SUB-BASIN 447
1829          KM   24-HOUR SCS TYPE II RAINFALL WAS USED TO FIND TC & R FOR THIS BASIN
1830          KM   THIS BASIN USED RAINFALL REDUCTION FACTOR OF  .999
1831          KM     L =  .49  Kb = .056  Adj. Slope =  221.0
1832          BA    .090
1833          LG    .250    .270   3.350    .870  30.000
1834          UC    .208    .145
1835          UA       0       5      16      30      65      77      84      90      94      97
1836          UA     100
```

```
                * DDM   ***** Preserved *****

1837            KK   RT404
1838            KM        RETRIEVE DIVERTED FLOW FOR WASH 109
1839            DR  WSH404
                * DDM   ***** Preserved *****
1                                        HEC-1 INPUT                                                    PAGE 48

LINE            ID.......1.......2.......3.......4.......5.......6.......7.......8.......9......10


1840            KK    R404
1841            KM        ROUTE FLOW FROM C110 TO C110
1842            RS       6    FLOW      -1
1843            RC    .019    .019    .019    3540     .03
1844            RX    1000    1012    1016    1020    1025    1029    1033    1045
1845            RY      15      12      11      10      10      11      12      15
                * DDM   ***** Preserved *****

1846            KK    C110
1847            KM   COMBINE HYDROGRAPHS FROM SUB-BASIN 447 AND R404
1848            HC       3
                * DDM   ***** Preserved *****

1849            KK    R110
1850            KM        ROUTE FLOW FROM C110 TO C115
1851            RS       1    FLOW      -1
1852            RC    .019    .019    .019     580   .0291
1853            RX    1000    1012    1016    1020    1035    1039    1043    1055
1854            RY      15      12      11      10      10      11      12      15
                * DDM   ***** Preserved *****

1855            KK    C115
1856            KM        COMBINE HYDROGRAPHS FROM C114 AND C110
1857            HC       2
                * DDM   ***** Preserved *****

1858            KK    R115
1859            KM        ROUTE FLOW FROM C115 TO Sub 453
1860            RS       1    FLOW      -1
1861            RC    .019    .019    .019    2125    .029
1862            RX    1000    1012    1016    1020    1035    1039    1043    1055
1863            RY      15      12      11      10      10      11      12      15
                * DDM   ***** Updated *****

1864            KK     448
1865            KM   SUB-BASIN 448
1866            KM   24-HOUR SCS TYPE II RAINFALL WAS USED TO FIND TC & R FOR THIS BASIN
1867            KM   THIS BASIN USED RAINFALL REDUCTION FACTOR OF 1.000
1868            KM     L =  .36  Kb = .042  Adj. Slope =  315.0
1869            BA    .045
1870            LG    .170    .310   4.200    .390  11.000
1871            UC    .133    .102
1872            UA       0       5      16      30      65      77      84      90      94      97
1873            UA     100
                * DDM   ***** Updated *****

1874            KK     449
1875            KM   SUB-BASIN 449
1876            KM   24-HOUR SCS TYPE II RAINFALL WAS USED TO FIND TC & R FOR THIS BASIN
1877            KM   THIS BASIN USED RAINFALL REDUCTION FACTOR OF 1.000
1878            KM     L =  .40  Kb = .054  Adj. Slope =  315.0
1879            BA    .050
1880            LG    .260    .280   3.500    .640   6.000
1881            UC    .167    .134
1                                        HEC-1 INPUT                                                    PAGE 49

LINE            ID.......1.......2.......3.......4.......5.......6.......7.......8.......9......10

1882            UA       0       5      16      30      65      77      84      90      94      97
1883            UA     100
                * DDM   ***** Preserved *****

1884            KK   C6364
1885            KM   COMBINE HYDROGRAPHS FROM SUB-BASINS 448 & 449
1886            HC       2
                * DDM   ***** Preserved *****

1887            KK   R6364
1888            KM   ROUTE FLOW FROM C116 AND SUB-BASINS 448 AND 449
1889            RS       5    FLOW      -1
1890            RC     .05    .035     .05    4375   .0333
1891            RX    1000    1027    1053    1080    1090    1117    1143    1170
1892            RY      15   13.33   11.67      10      10   11.67   13.33      15
```

```
                 * DDM   ***** Updated *****

1893             KK     450
1894             KM   SUB-BASIN 450
1895             KM   24-HOUR SCS TYPE II RAINFALL WAS USED TO FIND TC & R FOR THIS BASIN
1896             KM   THIS BASIN USED RAINFALL REDUCTION FACTOR OF 1.000
1897             KM     L =  .85  Kb = .057  Adj. Slope =  210.5
1898             BA    .070
1899             LG    .340    .350   3.630    .570   4.000
1900             UC    .296    .383
1901             UA       0       3       5       8      12      20      43      75      90      96
1902             UA     100
                 * DDM   ***** Updated *****

1903             KK     451
1904             KM   SUB-BASIN 451
1905             KM   24-HOUR SCS TYPE II RAINFALL WAS USED TO FIND TC & R FOR THIS BASIN
1906             KM   THIS BASIN USED RAINFALL REDUCTION FACTOR OF 1.000
1907             KM     L =  .57  Kb = .063  Adj. Slope =  175.0
1908             BA    .025
1909             LG    .340    .340   3.290    .750   3.000
1910             UC    .271    .453
1911             UA       0       3       5       8      12      20      43      75      90      96
1912             UA     100
                 * DDM   ***** Preserved *****

1913             KK    C451
1914             KM   COMBINE HYDROGRAPHS FROM SUB-BASINS 450 & 451
1915             HC       2
                 * DDM   ***** Preserved *****

1916             KK    RT66
1917             KM        RETRIEVE DIVERTED FLOW FROM SUB-BASIN 66
1918             DR   WSH66
                 * DDM   ***** Updated *****
1                                          HEC-1 INPUT                                                PAGE 50

LINE             ID.......1.......2.......3.......4.......5.......6.......7.......8.......9......10


1919             KK     452
1920             KM   SUB-BASIN 452
1921             KM   24-HOUR SCS TYPE II RAINFALL WAS USED TO FIND TC & R FOR THIS BASIN
1922             KM   THIS BASIN USED RAINFALL REDUCTION FACTOR OF 1.000
1923             KM     L =  .43  Kb = .055  Adj. Slope =  315.0
1924             BA    .040
1925             LG    .260    .280   3.700    .550   9.000
1926             UC    .171    .166
1927             UA       0       5      16      30      65      77      84      90      94      97
1928             UA     100
                 * DDM   ***** Preserved *****

1929             KK   C6465
1930             KM   COMBINE HYDROGRAPHS FROM SUB-BASINS 443 AND 452
1931             HC       2
                 * DDM   ***** Preserved *****

1932             KK   R6566
1933             KM        ROUTE FLOW FROM DIVERSIONS 65 AND 66 TO C116
1934             RS       3    FLOW      -1
1935             RC     .05    .035     .05    2435   .0282
1936             RX    1000    1045    1090    1150    1160    1220    1265    1310
1937             RY      25      23      20      10      10      20      23      25
                 * DDM   ***** Preserved *****

1938             KK    C116
1939             KM   COMBINE HYDROGRAPHS FROM SUB-BASINS 450 & 451 AND R6364 & R6465
1940             HC       3
                 * DDM   ***** Preserved *****

1941             KK  BASIN5
1942             KM        RESERVOIR WITHIN PARCEL 31      2-48 INCH PIPES AT OUTFALL
1943             KM        BASIN 5 FEET DEEP
1944             RS       1    ELEV       0
1945             SV       0     4.5     9.9
1946             SQ       0      69     190
1947             SE       0     2.5       5
                 * DDM   ***** Preserved *****

1948             KK    R116
1949             KM   ROUTE FLOW FROM C116 TO C117
1950             RS       2    FLOW      -1
1951             RC     .05    .035     .05    1300   .0333
1952             RX    1000    1100    1200    1300    1320    1420    1520    1620
```

```
1953          RY      13      12      11      10      10      11      12      13
              * DDM   ***** Updated *****

1954          KK     453
1955          KM   SUB-BASIN 453
1956          KM   24-HOUR SCS TYPE II RAINFALL WAS USED TO FIND TC & R FOR THIS BASIN
1957          KM   THIS BASIN USED RAINFALL REDUCTION FACTOR OF 1.000
1958          KM     L =  .58  Kb = .058  Adj. Slope =  138.0
1959          BA    .060
1960          LG    .290    .300   3.290    .820  18.000
1                                         HEC-1 INPUT                                                    PAGE 51

LINE          ID.......1.......2.......3.......4.......5.......6.......7.......8.......9......10

1961          UC    .275    .284
1962          UA       0       5      16      30      65      77      84      90      94      97
1963          UA     100
              * DDM   ***** Preserved *****

1964          KK    C117
1965          KM   COMBINE HYDROGRAPHS FROM SUB-BASIN 453 AND R116
1966          HC       2
              * DDM   ***** Preserved *****

1967          KK    C118
1968          KM   COMBINE HYDROGRAPHS FROM R115 AND C117
1969          HC       2
              * DDM   ***** Preserved *****

1970          KK    R118
1971          KM        ROUTE FLOW FROM C118 TO  DIV7
1972          RS       1    FLOW      -1
1973          RC    .019    .019    .019    1500    .024
1974          RX    1000    1012    1016    1020    1035    1039    1043    1055
1975          RY      15      12      11      10      10      11      12      15
              * DDM   ***** Preserved *****

1976          KK      D7
1977          KM        OFFLINE BASIN AT NORTH MOUNTAIN RIDGE   FLOWS ENTER BASIN OVER
1978          KM        30' WEIR SET AT 5.3' ABOVE THE CHANNEL BOTTOM, Vol = 3.6 A-F
1979          DT  BASIN6     3.6
1980          DI       0     363     487     563     645     900
1981          DQ       0       2      10      15      25     260
              * DDM   ***** Preserved *****

1982          KK    RTD7
1983          KM   RETRIEVE FLOW FROM DIVERSION INTO OFFLINE BASIN
1984          DR  BASIN6
              * DDM   ***** Preserved *****

1985          KK     SD7
1986          KM   RETRIEVE FLOW INTO FICTICIOUS BASIN AND BLEED OFF WITHIN 36 HOURS.
1987          KM     3.6 ACRE-FEETx43560/36x3600=1.2cfs
1988          RS       1    STOR       0
1989          SV       0     .01     3.6     4.0
1990          SQ       0     0.2     1.2     1.5
              * DDM   ***** Preserved *****

1991          KK     CD7
1992          KM   HYDROGRAPH COMBINATION FOR OFFLINE BASIN BLEEDOFF
1993          HC       2
              * DDM   ***** Updated *****

1994          KK     454
1995          KM   SUB-BASIN 454
1996          KM   24-HOUR SCS TYPE II RAINFALL WAS USED TO FIND TC & R FOR THIS BASIN
1997          KM   THIS BASIN USED RAINFALL REDUCTION FACTOR OF  .999
1998          KM     L = 1.23  Kb = .051  Adj. Slope =  163.0
1999          BA    .180
1                                         HEC-1 INPUT                                                    PAGE 52

LINE          ID.......1.......2.......3.......4.......5.......6.......7.......8.......9......10

2000          LG    .300    .310   3.780    .560  14.000
2001          UC    .379    .395
2002          UA       0       5      16      30      65      77      84      90      94      97
2003          UA     100
              *
              * DDM   ***** Preserved *****

2004          KK    C454
2005          KM        COMBINE HYDROGRAPHS FROM SUB-BASIN 454 AND CDIV7
2006          HC       2
              * DDM   ***** Preserved *****
```

```
2007          KK    R454
2008          KM   CHANNEL GEOMETRY OBTAINED FROM 2' CONTOUR MAPPING.
2009          KM   ROUTE FLOW FROM C454 TO 415C
2010          RS       3    FLOW      -1
2011          RC    .045    .035    .045    2200    .009
2012          RX       0      .5       1      33      42      67    67.5      68
2013          RY       5       4       4       0       0       6       6       6
              * DDM   ***** Updated *****

2014          KK    415A
2015          KM   SUB-BASIN 415A
2016          KM   24-HOUR SCS TYPE II RAINFALL WAS USED TO FIND TC & R FOR THIS BASIN
2017          KM   THIS BASIN USED RAINFALL REDUCTION FACTOR OF  .998
2018          KM     L = 1.21  Kb = .049  Adj. Slope =  140.0
2019          BA    .280
2020          LG    .300    .260   3.630    .710  15.000
2021          UC    .400    .322
2022          UA       0       5      16      30      65      77      84      90      94      97
2023          UA     100
              * DDM   ***** Preserved *****

2024          KK  CP415A
2025          KM   Combine contributing hydrographs to the Las Sendas channel.  This
2026          KM   includes routed hydrographs from 415B and R454, flow diverted directly into
2027          KM   the channel from CPSD45, and the runoff hydrograph from subbasin 415A
2028          HC       3
              *
              * DDM   ***** Preserved *****

2029          KK   RMCDB
2030          KO       3
2031          KM   Retrieve flow that remained in the storm drain and goes to the McDowell Road
2032          KM   detention basin
2033          DR    MCDB
              * DDM   ***** Preserved *****

2034          KK   SMCDB
2035          KM   McDowell Road Basin - outlet is a 48-inch storm drain with restricter to the Las Sendas
2036          KM   channel
2037          KO       1
2038          RS       1    STOR       0
2039          SV       0    0.19     0.5    0.93    1.47    2.13    2.92    3.83    4.89    6.10
2040          SV    7.49    9.05
```



```
LINE          ID.......1.......2.......3.......4.......5.......6.......7.......8.......9......10

2041          SQ       0       0       0       0       0       0       0       0       0       0
2042          SQ      25     225
2043          SE    1630    1631    1632    1633    1634    1635    1636    1637    1638    1639
2044          SE    1640    1641
              *
              * DDM   ***** Preserved *****

2045          KK  CPLSCH
2046          KM   Combine discharge from McDowell Road basin with the flows in the Las Sendas
2047          KM   channel
2048          HC       2
              *
              * DDM   ***** Preserved *****

2049          KK   R415A
2050          KM   CHANNEL GEOMETRY OBTAINED FROM 2' CONTOUR MAPPING.
2051          KM   ROUTING OF FLOW FROM C415A TO 455C
2052          RS       2    FLOW      -1
2053          RC    .045     .03    .045    4100    .024
2054          RX       0      .5       1       8      16      23    23.5      24
2055          RY       8       8       8       0       0       8       8       8
              * DDM   ***** Updated *****

2056          KK     455
2057          KM   SUB-BASIN 455
2058          KM   24-HOUR SCS TYPE II RAINFALL WAS USED TO FIND TC & R FOR THIS BASIN
2059          KM   THIS BASIN USED RAINFALL REDUCTION FACTOR OF  .993
2060          KM     L = 1.70  Kb = .041  Adj. Slope =  146.0
2061          BA   1.111
2062          LG    .270    .280   3.700    .640  24.000
2063          UC    .421    .204
2064          UA       0       5      16      30      65      77      84      90      94      97
2065          UA     100
              * DDM   ***** Preserved *****

2066          KK    D455
```

```
2067          KM        DIVERT FLOW INTO ONLINE  DETENTION BASIN
2068          KM   DETENTION/RETENTION BASINS LOCATED WITHIN LAS SENDAS ADDENDUM III
2069          KM   FOR BASIN #: 30      34      43      47&58
2070          KM        MAXIMUM VOLUME DIVERSION = 74.1 acre-feet
2071          DT   BS455    74.1
2072          DI       0   10000
2073          DQ       0   10000
              * DDM   ***** Preserved *****

2074          KK   RT455
2075          KM   RETRIEVE FLOW FROM DIVERSION INTO ONLINE BASIN
2076          DR   BS455
              * DDM   ***** Preserved *****
1                                   HEC-1 INPUT                                                    PAGE 54

LINE          ID.......1.......2.......3.......4.......5.......6.......7.......8.......9......10


2077          KK    S455
2078          KM   RETRIEVE FLOW INTO FICTICIOUS BASIN AND BLEED OFF WITHIN 36 HOURS.
2079          KM    74.1 ACRE-FEETx43560/36x3600=25cfs
2080          RS       1    STOR       0
2081          SV       0     .01    74.1   100.0
2082          SQ       0     3.0      25   250.0
              * DDM   ***** Preserved *****

2083          KK    C455
2084          KM   HYDROGRAPH COMBINATION FOR SUB-BASIN 455 AND DIVERTED BASIN STORAGE OF 455
2085          HC       2
              *

2086          KK   CC455
2087          KM  HYDROGRAPH COMBINATION OF 420A, R415A AND C455
2088          HC       3
              * DDM   ***** Preserved *****

2089          KK    S440
2090          KM   SPOOK HILL FRS PLANS DATED 6/15/77
2091          KM   OUTLET PIPE=7'x7.5'RCBC; L=70 INLET INV.=1566; OUTLET INV.=1566
2092          KM   EMERGENCY SPILLWAY ELEV.=1582; PRINCIPLE SPILLWAY ELEV.=1577.5
2093          KM   STORAGE VOLUME BELOW PRINCIPLE SPILLWAY FOR SEDIMENT = 271 ACRE-FEET
2094          RS       1    STOR       0
2095          SV     0.0      81   211.0  265.72  692.96  896.16  1120.0 1630.34  2230.9 3311.68
2096          SQ     0.0     1.0     3.0     8.0  515.00  780.00  825.00  3184.7  7426.0 16007.3
2097          SE   577.0  578.00  579.00  579.36  581.86  582.86  583.86  585.86  587.86  590.86
              * DDM   ***** Preserved *****

2098          KK    R455
2099          KM   ROUTE FLOW FROM SPOOK HILL FRS TO SUB-BASIN 480
2100          RS      15    FLOW      -1
2101          RC    .035    .025    .035    7000   .0002
2102          RX       0       1       2      28      58      84      85      86
2103          RY    13.5    13.5    13.5       0       0    13.5    13.5    13.5
              * DDM   ***** Updated *****

2104          KK     480
2105          KM   SUB-BASIN 480
2106          KM   24-HOUR SCS TYPE II RAINFALL WAS USED TO FIND TC & R FOR THIS BASIN
2107          KM   THIS BASIN USED RAINFALL REDUCTION FACTOR OF  .996
2108          KM     L = 1.21  Kb = .042  Adj. Slope =  165.0
2109          BA    .731
2110          LG    .270    .270   3.580    .730  27.000
2111          UC    .325    .148
2112          UA       0       5      16      30      65      77      84      90      94      97
2113          UA     100
              * DDM   ***** Preserved *****
1                                   HEC-1 INPUT                                                    PAGE 55

LINE          ID.......1.......2.......3.......4.......5.......6.......7.......8.......9......10


2114          KK    D480
2115          KM        DIVERT FLOW INTO ONLINE  DETENTION BASIN
2116          KM   DETENTION/RETENTION BASINS LOCATED WITHIN LAS SENDAS ADDENDUM III
2117          KM   FOR BASIN #: 18 & 26
2118          KM        MAXIMUM VOLUME DIVERSION = 16.5 acre-feet
2119          DT   BS480    16.5
2120          DI       0   10000
2121          DQ       0   10000
              * DDM   ***** Preserved *****

2122          KK   RT480
2123          KM   RETRIEVE FLOW FROM DIVERSION INTO ONLINE BASIN
2124          DR   BS480
```

```
                * DDM   ***** Preserved *****

2125            KK    S480
2126            KM   RETRIEVE FLOW INTO FICTICIOUS BASIN AND BLEED OFF WITHIN 36 HOURS.
2127            KM    16.5 ACRE-FEETx43560/36x3600=5.5cfs
2128            RS       1    STOR       0
2129            SV       0     .01    16.5    30.0
2130            SQ       0     3.0     5.6    50.0
                * DDM   ***** Preserved *****

2131            KK    C480
2132            KM   HYDROGRAPH COMBINATION FOR SPOOK HILL FRS
2133            HC       2
                * DDM   ***** Preserved *****

2134            KK   CC480
2135            KM   HYDROGRAPH COMBINATION AT SUBBASIN 480
2136            HC       2   0.731
                * DDM   ***** Preserved *****

2137            KK    R480
2138            KM   ROUTE FLOW FROM SUB-BASIN 480 TO SUBBASIN 462
2139            RS       7    FLOW      -1
2140            RC    .035    .025    .035    2800   .0002
2141            RX       0       1       2      28      58      84      85      86
2142            RY    13.5    13.5    13.5       0       0    13.5    13.5    13.5
                * DDM   ***** Updated *****

2143            KK     456
2144            KM   SUB-BASIN 456
2145            KM   24-HOUR SCS TYPE II RAINFALL WAS USED TO FIND TC & R FOR THIS BASIN
2146            KM   THIS BASIN USED RAINFALL REDUCTION FACTOR OF  .998
2147            KM     L =  .94  Kb = .045  Adj. Slope =  315.0
2148            BA    .260
2149            LG    .300    .380   5.600    .200  12.000
2150            UC    .217    .139
2151            UA       0       5      16      30      65      77      84      90      94      97
2152            UA     100
                * DDM   ***** Preserved *****
1                                          HEC-1 INPUT                                          PAGE

LINE            ID.......1.......2.......3.......4.......5.......6.......7.......8.......9......10

2153            KK      D1
2154            KM        DIVERT FLOW INTO OFFLINE DETENTION BASIN
2155            KM        WEIR FOR BASIN SET AT 4 FEET ABOVE CHANNEL BOTTOM
2156            DT  BASIN1     4.0
2157            DI       0    11.1   127.9   234.4   577.7   789.9  1025.5  1280.9  1555.7
2158            DQ       0       0       0    47.7     248   381.8   533.6   701.5     884
                * DDM   ***** Preserved *****

2159            KK     CD2
2160            KM        SPLIT OUT FLOW FOR WASHES THAT FLOW TO THE SOUTH FROM
2161            KM        WASHES THAT DRAIN TO THE WES, SOUTHERN WASHES FED BY 30" & 24" PIPE
2162            DT    WA30
2163            DI       0    11.1   127.9   189.6   329.7     408   491.9   579.4   671.7
2164            DQ       0    11.1    38.4    48.2      63    69.5      76      81      86
                * DDM   ***** Preserved *****

2165            KK    R456
2166            KM        ROUTE FLOW FROM SUB-BASIN 51 TO C101
2167            RS       2    FLOW      -1
2168            RC     .05    .035     .05    3800    .044
2169            RX    1000    1010    1020    1036    1041    1057    1067    1077
2170            RY   14.88   14.44      14      10      10      14   14.44   14.88
                * DDM   ***** Updated *****

2171            KK     457
2172            KM   SUB-BASIN 457
2173            KM   24-HOUR SCS TYPE II RAINFALL WAS USED TO FIND TC & R FOR THIS BASIN
2174            KM   THIS BASIN USED RAINFALL REDUCTION FACTOR OF  .999
2175            KM     L = 1.01  Kb = .045  Adj. Slope =  308.8
2176            BA    .190
2177            LG    .270    .330   3.950    .460   6.000
2178            UC    .237    .195
2179            UA       0       5      16      30      65      77      84      90      94      97
2180            UA     100
                * DDM   ***** Preserved *****

2181            KK    C101
2182            KM        COMBINE HYDROGRAPHS FROM SUB-BASINS 50 AND 51
2183            HC       2
                * DDM   ***** Preserved *****
```

```
2184          KK      D3
2185          KM        RESERVOIR AT THE EDGE OF THE PROPERTY   FLOW FROM CHANNEL
2186          KM        DIVERTED  INTO OFFLINE BASIN A 25' WEIR SET AT ELEVATION 1808 FT
2187          DT  BASIN2     5.0
2188          DI       0      36      70     110     180   313.5     402   500.9
2189          DQ       0       0       0       0       0    67.5     124   190.9
              * DDM   ***** Preserved *****
1                                          HEC-1 INPUT                                          PAGE 57

LINE          ID.......1.......2.......3.......4.......5.......6.......7.......8.......9......10


2190          KK    RTD3
2191          KM   RETRIEVE FLOW FROM DIVERSION INTO OFFLINE BASIN
2192          DR  BASIN2
              * DDM   ***** Preserved *****

2193          KK     SD3
2194          KM   RETRIEVE FLOW INTO FICTICIOUS BASIN AND BLEED OFF WITHIN 36 HOURS.
2195          KM     5.0 ACRE-FEETx43560/36x3600=1.7cfs
2196          RS       1    STOR       0
2197          SV       0     .01       5
2198          SQ       0     0.7     1.7
              * DDM   ***** Preserved *****

2199          KK     CD3
2200          KM   HYDROGRAPH COMBINATION FOR OFFLINE BASIN BLEEDOFF
2201          HC       2
              * DDM   ***** Preserved *****

2202          KK    R101
2203          KM        ROUTE FLOW FROM SUBBASIN C101 TO C103
2204          RS       1    FLOW      -1
2205          RC     .05    .035     .05    1450     .05
2206          RX    1000    1010    1020    1036    1041    1057    1067    1077
2207          RY      15    14.5      14      10      10      14    14.5      15
              * DDM   ***** Updated *****

2208          KK     458
2209          KM   SUB-BASIN 458
2210          KM   24-HOUR SCS TYPE II RAINFALL WAS USED TO FIND TC & R FOR THIS BASIN
2211          KM   THIS BASIN USED RAINFALL REDUCTION FACTOR OF  .999
2212          KM     L =  .76  Kb = .048  Adj. Slope =  299.0
2213          BA    .190
2214          LG    .290    .330   5.800    .190   6.000
2215          UC    .204    .131
2216          UA       0       5      16      30      65      77      84      90      94      97
2217          UA     100
              * DDM   ***** Preserved *****

2218          KK    C103
2219          KM        COMBINE HYDROGRAPHS FROM SUB-BASIN 55 AND C101
2220          HC       2
              * DDM   ***** Preserved *****

2221          KK    R103
2222          KM        ROUTE FLOW FROM SUBBASIN C103 TO C106
2223          RS       1    FLOW      -1
2224          RC     .05    .035     .05     900     .03
2225          RX    1000    1010    1020    1030    1050    1060    1070    1080
2226          RY   13.16   12.83    12.5      10      10    12.5   12.83   13.16
              * DDM   ***** Preserved *****
1                                          HEC-1 INPUT                                          PAGE 58

LINE          ID.......1.......2.......3.......4.......5.......6.......7.......8.......9......10


2227          KK    RT30
2228          KM        RETRIEVE DIVERTED FLOW FOR WASH BELOW 30 INCH PIPE
2229          DR    WA30
              * DDM   ***** Preserved *****

2230          KK     R30
2231          KM        ROUTE FLOW FROM WASH DIVERSION TO COMBINE C52
2232          RS       1    FLOW      -1
2233          RC     .05    .035     .05    1630     .05
2234          RX    1000    1010    1020    1036    1041    1057    1067    1077
2235          RY      15    14.5      14      10      10      14    14.5      15
              * DDM   ***** Preserved *****

2236          KK    RTB1
2237          KM        RETRIEVE DIVERTED FLOW FROM BASIN 1
2238          DR  BASIN1
```

```
                 * DDM   ***** Preserved *****

2239             KK      B1
2240             KM        ROUTE FLOW THROUGH OFFLINE DETENTION BASIN
2241             KM        FLOW OUTLETS THROUGH A 30 INCH OUTLET PIPE
2242             RS       1    ELEV       0
2243             SV              .7     1.4     2.3     2.7     4.0
2244             SQ       0       5      16      28    32.5      37
2245             SE       0       1       2       3     3.5       4
                 * DDM   ***** Preserved *****

2246             KK     RB1
2247             KM        ROUTE FLOW FROM BASIN DIVERSION TO COMBINE C52
2248             RS       3    FLOW      -1
2249             RC     .05    .035     .05    1720     .05
2250             RX    1000    1010    1020    1036    1041    1057    1067    1077
2251             RY      15    14.5      14      10      10      14    14.5      15
                 * DDM   ***** Preserved *****

2252             KK    CDIV
2253             KM        COMBINE FLOWS FROM WA30 AND BASIN 1
2254             HC       2     .12
                 * DDM   ***** Updated *****

2255             KK     459
2256             KM   SUB-BASIN 459
2257             KM   24-HOUR SCS TYPE II RAINFALL WAS USED TO FIND TC & R FOR THIS BASIN
2258             KM   THIS BASIN USED RAINFALL REDUCTION FACTOR OF 1.000
2259             KM     L =  .35  Kb = .052  Adj. Slope =  251.6
2260             BA    .030
2261             LG    .220    .300   3.330    .710   8.000
2262             UC    .162    .157
2263             UA       0       5      16      30      65      77      84      90      94      97
2264             UA     100
                 * DDM   ***** Preserved *****
1                                          HEC-1 INPUT                                          PAGE 59

LINE             ID.......1.......2.......3.......4.......5.......6.......7.......8.......9......10

2265             KK     C52
2266             KM        COMBINE FLOWS FROM SUB-BASIN 52 WA30 AND BASIN 1
2267             HC       2
                 * DDM   ***** Preserved *****

2268             KK     R52
2269             KM        ROUTE FLOW FROM SUBBASIN 52 TO C102
2270             RS       3    FLOW      -1
2271             RC     .05    .035     .05    2000     .05
2272             RX    1000    1010    1020    1036    1041    1057    1067    1077
2273             RY      15    14.5      14      10      10      14    14.5      15
                 * DDM   ***** Updated *****

2274             KK     460
2275             KM   SUB-BASIN 460
2276             KM   24-HOUR SCS TYPE II RAINFALL WAS USED TO FIND TC & R FOR THIS BASIN
2277             KM   THIS BASIN USED RAINFALL REDUCTION FACTOR OF  .999
2278             KM     L =  .62  Kb = .058  Adj. Slope =  194.0
2279             BA    .140
2280             LG    .250    .260   3.740    .690  27.000
2281             UC    .242    .160
2282             UA       0       5      16      30      65      77      84      90      94      97
2283             UA     100
                 * DDM   ***** Preserved *****

2284             KK    C102
2285             KM        COMBINE HYDROGRAPHS FROM SUB-BASINS 52 AND 53
2286             HC       2
                 * DDM   ***** Preserved *****

2287             KK  BASIN3
2288             KM        RESERVOIR AT CLUBHOUSE LOCATION 1-30 INCH PIPE AT OUTFALL
2289             KM        BOTTOM OF BASIN AT 6 FEET ABOVE 1795 ELEVATION
2290             RS       1    ELEV       0
2291             SA       0       0       0       0     .34    1.59    1.81    1.96    2.13     2.3
2292             SQ       0      22      45    47.4      48      51      57      62      67      73
2293             SE    1795  1797.5    1800  1800.4  1800.5    1801    1802    1803    1804  1805.5
                 * DDM   ***** Preserved *****

2294             KK      R3
2295             KM        ROUTE FLOW FROM C102 to C106
2296             RS       5    FLOW      -1
2297             RC     .05     .03     .05    2750   .0375
2298             RX    1000    1010    1020    1052    1086    1118    1128    1138
```

```
2299          RY    19.2    18.4      18      10      10      18    18.4    19.2
              * DDM   ***** Updated *****

2300          KK     461
2301          KM   SUB-BASIN 461
2302          KM   24-HOUR SCS TYPE II RAINFALL WAS USED TO FIND TC & R FOR THIS BASIN
2303          KM   THIS BASIN USED RAINFALL REDUCTION FACTOR OF  .999
2304          KM     L =  .83  Kb = .052  Adj. Slope =  181.0
2305          BA    .120
2306          LG    .270    .250   4.250    .450  21.000
1                                          HEC-1 INPUT                                                    PAGE 60

LINE          ID.......1.......2.......3.......4.......5.......6.......7.......8.......9......10

2307          UC    .271    .250
2308          UA       0       5      16      30      65      77      84      90      94      97
2309          UA     100
              * DDM   ***** Preserved *****

2310          KK    C104
2311          KM        COMBINE HYDROGRAPHS FROM SUB-BASIN 54 AND R102
2312          HC       2
              * DDM   ***** Preserved *****

2313          KK    C106
2314          KM        COMBINE HYDROGRAPHS FROM SUB-BASIN C103 AND C104
2315          HC       2
              * DDM   ***** Preserved *****

2316          KK    R106
2317          KM        ROUTE FLOW FROM C106 TO C49
2318          RS       2    FLOW      -1
2319          RC     .05    .035     .05    3950    .033
2320          RX    1000    1010    1020    1030    1050    1060    1070    1080
2321          RY   13.16   12.83    12.5      10      10    12.5   12.83   13.16
              * DDM   ***** Updated *****

2322          KK     462
2323          KM   SUB-BASIN 462
2324          KM   24-HOUR SCS TYPE II RAINFALL WAS USED TO FIND TC & R FOR THIS BASIN
2325          KM   THIS BASIN USED RAINFALL REDUCTION FACTOR OF  .998
2326          KM     L =  .97  Kb = .045  Adj. Slope =  297.7
2327          BA    .301
2328          LG    .300    .330   5.300    .240  12.000
2329          UC    .225    .137
2330          UA       0       5      16      30      65      77      84      90      94      97
2331          UA     100
              * DDM   ***** Preserved *****

2332          KK     C56
2333          KM        COMBINE HYDROGRAPHS FROM SUB-BASIN 56 AND C106
2334          HC       2
              * DDM   ***** Preserved *****

2335          KK    C462
2336          KM        COMBINE HYDROGRAPHS AT SUBBASIN 462
2337          HC       2    2.09
              * DDM   ***** Preserved *****

2338          KK    R462
2339          KM   ROUTE FLOW FROM SUB-BASIN 462 TO SUB-BASIN 500 (First Channel Reach)
2340          RS       1    FLOW      -1
2341          RC    .025    .025    .025    1800    .005
2342          RX       0       1      20      32      62      74      93      94
2343          RY      13      12      12       0       0      12      12      13
              *
              * DDM   ***** Preserved *****
1                                          HEC-1 INPUT                                                    PAGE 61

LINE          ID.......1.......2.......3.......4.......5.......6.......7.......8.......9......10

2344          KK   RR462
2345          KM   ROUTE FLOW FROM SUB-BASIN 462 TO SUB-BASIN 500 (Second Natural Wash Reach)
2346          RS       3    FLOW      -1
2347          RC    .055     .05    .055    4700     .05
2348          RX       0       1       2      28      58      84      85      86
2349          RY    13.5    13.5    13.5       0       0    13.5    13.5    13.5
              * DDM   ***** Updated *****

2350          KK     500
2351          KM   SUB-BASIN 500
2352          KM   24-HOUR SCS TYPE II RAINFALL WAS USED TO FIND TC & R FOR THIS BASIN
2353          KM   THIS BASIN USED RAINFALL REDUCTION FACTOR OF  .994
```

```
2354          KM     L = 2.77  Kb = .042  Adj. Slope =  286.8
2355          BA    .930
2356          LG    .350    .400   6.000    .170   9.000
2357          UC    .421    .333
2358          UA       0       3       5       8      12      20      43      75      90      96
2359          UA     100
              * DDM   ***** Preserved *****

2360          KK    C500
2361          KM   HYDROGRAPH COMBINATION FOR THE ENTIRE WATERSHED AT THE SALT RIVER
2362          HC       2    3.02
2363          ZZ
1
                SCHEMATIC DIAGRAM OF STREAM NETWORK
 INPUT
  LINE      (V) ROUTING          (--->) DIVERSION OR PUMP FLOW

   NO.      (.) CONNECTOR        (<---) RETURN OF DIVERTED OR PUMPED FLOW

    39          10
                 V
                 V
    49         R10
                 V
                 V
    55         R12
                 .
                 .
    61           .          20
                 .           .
                 .           .
    74           .           .------->    BS20
    71           .         D20
                 .           .
                 .           .
    79           .           .           .<-------    BS20
    77           .           .        RT20
                 .           .           V
                 .           .           V
    80           .           .         S20
                 .           .           .
                 .           .           .
    86         C20........................
                 V
                 V
    89         R20
                 .
                 .
    95           .          40
                 .           .
                 .           .
   108           .           .------->    BS40
   105           .         D40
                 .           .
                 .           .
   113           .           .           .<-------    BS40
   111           .           .        RT40
                 .           .           V
                 .           .           V
   114           .           .         S40
                 .           .           .
                 .           .           .
   120         C40........................
                 .
                 .
   123           .          60
                 .           .
                 .           .
   136           .           .------->    BS60
   133           .         D60
                 .           .
                 .           .
   141           .           .           .<-------    BS60
   139           .           .        RT60
                 .           .           V
                 .           .           V
   142           .           .        SB60
                 .           .           .
                 .           .           .
   148         C60........................
                 V
                 V
   151         S60
                 V
```

```
                V
163          R60
                V
                V
169         RR60
                .
                .
175             .          80
                .            .
                .            .
188             .            .-------->    BS80
185             .         D80
                .            .
                .            .
193             .            .            .<-------    BS80
191             .            .        RT80
                .            .           V
                .            .           V
194             .            .         S80
                .            .           .
                .            .           .
200             .         C80............
                .            .
                .            .
203         CC80............
                V
                V
206          R80
                .
                .
212             .         100
                .            .
                .            .
225             .            .-------->   BS100
222             .        D100
                .            .
                .            .
230             .            .            .<-------   BS100
228             .            .       RT100
                .            .           V
                .            .           V
231             .            .        S100
                .            .           .
                .            .           .
237         C100........................
                V
                V
240         R100
                .
                .
246             .         120
                .            .
                .            .
259             .            .-------->   BS120
256             .        D120
                .            .
                .            .
264             .            .            .<-------   BS120
262             .            .       RT120
                .            .           V
                .            .           V
265             .            .        S120
                .            .           .
                .            .           .
271         C120........................
                V
                V
274         R120
                .
                .
280             .         140
                .            .
                .            .
293             .            .-------->   BS140
290             .        D140
                .            .
                .            .
298             .            .            .<-------   BS140
296             .            .       RT140
                .            .           V
                .            .           V
299             .            .        S140
                .            .           .
                .            .           .
```

```
305        C140.......................
              .
              .
308           .         150
              .           V
              .           V
318           .        R150
              .           V
              .           V
324           .        R152
              .           .
              .           .
330           .           .         160
              .           .           .
              .           .           .
343           .           .           .-------->   BS160
340           .           .        D160
              .           .           .
              .           .           .
348           .           .           .           .<-------   BS160
346           .           .           .       RT160
              .           .           .           V
              .           .           .           V
349           .           .           .        S160
              .           .           .           .
              .           .           .           .
355           .        C160........................
              .           .
              .           .
358           .           .         180
              .           .           .
              .           .           .
368        C180.......................
              .
              .
371           .         210
              .           V
              .           V
381           .        R210
              .           .
              .           .
387           .           .         240
              .           .           .
              .           .           .
397           .        C240............
              .           V
              .           V
400           .        S240
              .           V
              .           V
407           .        R240
              .           .
              .           .
414           .           .         220
              .           .           .
              .           .           .
424           .        C220............
              .           V
              .           V
427           .       SW220
              .           V
              .           V
434           .        R220
              .           .
              .           .
441           .           .         190
              .           .           V
              .           .           V
451           .           .        R190
              .           .           V
              .           .           V
457           .           .        R192
              .           .           .
              .           .           .
463           .           .           .         200
              .           .           .           .
              .           .           .           .
473           .        C200........................
              .           V
              .           V
476           .       SW200
              .           V
              .           V
483           .        R200
```

```
                .           V
                .           V
489             .       SS200
                .           V
                .           V
[illegible]6    .       RR200
                .           .
                .           .
502         CC180............
                V
                V
505          S180
                V
                V
517          R180
                .
                .
526             .         260
                .           .
                .           .
536          C260............
                V
                V
539          R260
                .
                .
548             .         280
                .           .
                .           .
558          C280............
                V
                V
561          R280
                .
                .
570             .         300
                .           .
                .           .
580          C300............
                V
                V
[illegible]83    R300
                .
                .
592             .        305A
                .           .
                .           .
602          C305............
                V
                V
605          R305
                .
                .
613             .       320B1
                .           .
                .           .
628             .           .-------> B320B1
623             .      D320B1
                .           .
                .           .
633             .           .           .<-------  B320B1
631             .           .      T320B1
                .           .           V
                .           .           V
634             .           .      S320B1
                .           .           .
                .           .           .
640        C320B1........................
                .
                .
643             .         350
                .           .
                .           .
656             .           .-------> SF350
653             .        D350
                .           V
                .           V
[illegible]59    .        R350
                .           .
                .           .
666             .           .         310
                .           .           .
                .           .           .
676             .        C310............
```

```
                .          V
                .          V
679             .       R310
                .          .
                .          .
686             .          .        305B
                .          .           V
                .          .           V
696             .          .       R305B
                .          .           .
                .          .           .
703             .          .           .       320B2
                .          .           .           .
                .          .           .           .
718             .          .           .           .-------> B320B2
713             .          .           .      D320B2
                .          .           .           .
                .          .           .           .
723             .          .           .           .           .<------- B320B2
721             .          .           .           .      T320B2
                .          .           .           .           V
                .          .           .           .           V
724             .          .           .           .      S320B2
                .          .           .           .           .
                .          .           .           .           .
730             .       C320B2.......................................
                .          V
                .          V
733             .       R320B2
                .          .
                .          .
740             .          .        340B
                .          .           .
                .          .           .
755             .          .           .-------> BS340B
750             .          .       D340B
                .          .           .
                .          .           .
760             .          .           .           .<------- BS340B
758             .          .           .      RT340B
                .          .           .           V
                .          .           .           V
761             .          .           .       S340B
                .          .           .           .
                .          .           .           .
767             .        C340B........................
                .          .
                .          .
772             .          .-------> BS340
770             .       DD340B
                .          .
                .          .
777             .          .           .<------- BS340
775             .          .       RT340
                .          .           V
                .          .           V
778             .          .      SS340B
                .          .           .
                .          .           .
784             .       CD340B............
                .          .
                .          .
789             .          .           .<------- SF350
787             .          .       RT350
                .          .           V
                .          .           V
790             .          .       RR350
                .          .           .
                .          .           .
797             .          .           .         355
                .          .           .           .
                .          .           .           .
807             .          .        C355............
                .          .           .
                .          .           .
813             .          .           .-------> BS355
810             .          .        D355
                .          .           .
                .          .           .
818             .          .           .           .<------- BS355
816             .          .           .       RT355
                .          .           .           V
                .          .           .           V
819             .          .           .        S355
```

```
                .           .           .           .
                .           .           .           .
825             .           .       CC355............
                .           .           V
                .           .           V
828             .           .        R355
                .           .           .
                .           .           .
835             .      CC340B............
                .           V
                .           V
838             .       R340B
                .           .
                .           .
845             .           .       340A2
                .           .           .
                .           .           .
858             .           .           .-------> B340A2
855             .           .      D340A2
                .           .           .
                .           .           .
863             .           .           .           .<-------  B340A2
861             .           .           .      T340A2
                .           .           .           V
                .           .           .           V
864             .           .           .      S340A2
                .           .           .           .
                .           .           .           .
870             .      C340A2........................
                .           V
                .           V
873             .      R340A2
                .           .
                .           .
880       CC320B............
                V
                V
883        R320B
                .
                .
892             .        320A
                .           .
                .           .
907             .           .-------> BS320A
902             .       D320A
                .           .
                .           .
912             .           .           .<-------  BS320A
910             .           .      RT320A
                .           .           V
                .           .           V
913             .           .       S320A
                .           .           .
                .           .           .
919         C320........................
                .
                .
922             .       340A1
                .           .
                .           .
937             .           .-------> B340A1
932             .      D340A1
                .           .
                .           .
942             .           .           .<-------  B340A1
940             .           .      T340A1
                .           .           V
                .           .           V
943             .           .      S340A1
                .           .           .
                .           .           .
949             .      C340A1............
                .           .
                .           .
952         C340............
                .
                .
955             .         360
                .           .
                .           .
969             .           .-------> BS360
965             .        D360
                .           .
                .           .
```

```
 974          .           .           .<-------   BS360
 972          .           .       RT360
              .           .           V
              .           .           V
 975          .           .        S360
              .           .           .
              .           .           .
 981       C360.......................
              .
              .
 984          .        380A
              .           .
              .           .
 994      C380A............
              .
              .
 997          .        400A
              .           .
              .           .
1007      C400A............
              .
              .
1010          .         370
              .           V
              .           V
1020          .        S370
              .           .
              .           .
1032          .           .------->   B370W
1030          .        D370
              .           V
              .           V
1035          .       R370S
              .           .
              .           .
1042          .           .       380B1
              .           .           .
              .           .           .
1056          .           .           .------->  B380B1
1052          .           .      D380B1
              .           .           .
              .           .           .
1061          .           .           .           .<-------  B380B1
1059          .           .           .      T380B1
              .           .           .           V
              .           .           .           V
1062          .           .           .      S380B1
              .           .           .           .
              .           .           .           .
1068          .      C380B1........................
              .           V
              .           V
1071          .      R380B1
              .           .
              .           .
1078          .           .       400B1
              .           .           .
              .           .           .
1092          .           .           .------->  B400B1
1088          .           .      D400B1
              .           .           .
              .           .           .
1097          .           .           .           .<-------  B400B1
1095          .           .           .      T400B1
              .           .           .           V
              .           .           .           V
1098          .           .           .      S400B1
              .           .           .           .
              .           .           .           .
1104          .           .      C400B1............
              .           .           .
              .           .           .
1107      CC400B........................
              .
              .
1110          .       420A2
              .           .
              .           .
1120      C400A2............
              .
              .
1125          .           .<-------   B370W
1123          .       T370W
              .           V
```

```
                 .          V
1126             .       R370W
                 .          .
                 .          .
[illegible]2     .          .        395A
                 .          .           V
                 .          .           V
1142             .          .      R390C1
                 .          .           .
                 .          .           .
1150             .          .           .        395B
                 .          .           .           V
                 .          .           .           V
1160             .          .           .      R390C2
                 .          .           .           .
                 .          .           .           .
1168             .          .           .           .        390C
                 .          .           .           .           .
                 .          .           .           .           .
1178             .          .      CP390C.......................
                 .          .           .
                 .          .           .
1185             .          .           .-------> TO390B
1182             .          .       TOC-H
                 .          .           .
                 .          .           .
1188             .       C370............
                 .          V
                 .          V
1192             .       R390S
                 .          .
                 .          .
1198             .          .       400B3
                 .          .           .
                 .          .           .
1212             .          .           .-------> B400B3
1208             .          .      D400B3
                 .          .           .
                 .          .           .
[illegible]17    .          .           .           .<-------  B400B3
[illegible]5     .          .           .      T400B3
                 .          .           .           V
                 .          .           .           V
1218             .          .           .      S400B3
                 .          .           .           .
                 .          .           .           .
1224             .          .      C400B3............
                 .          .           .
                 .          .           .
1227             .       C390S............
                 .          .
                 .          .
1230             .          .       380B3
                 .          .           .
                 .          .           .
1243             .          .           .-------> B380B3
1240             .          .      D380B3
                 .          .           .
                 .          .           .
1248             .          .           .           .<-------  B380B3
1246             .          .           .      T380B3
                 .          .           .           V
                 .          .           .           V
1249             .          .           .      S380B3
                 .          .           .           .
                 .          .           .           .
1255             .          .      C380B3............
                 .          .           .
                 .          .           .
1261             .          .           .-------> 380B3c
1258             .          .      D380B3
                 .          .           .
                 .          .           .
1267             .          .           .-------> 380B3a
1264             .          .      380B3b
                 .          .           .
                 .          .           .
[illegible]70    .       C380BB............
                 .          .
                 .          .
1276             .          .-------> B38B3b
1273             .       D380B
                 .          .
                 .          .
```

```
1281          .           .           .<-------  B38B3b
1279          .           .      RT380B
              .           .           V
              .           .           V
1282          .           .       S380B
              .           .           .
              .           .           .
1288          .      CC380B............
              .           V
              .           V
1291          .      R38B3b
              .           .
              .           .
1299          .           .           .<-------  380B3a
1297          .           .      T38B3a
              .           .           V
              .           .           V
1300          .           .      R38B3a
              .           .           .
              .           .           .
1308          .           .           .           .<-------  380B3c
1306          .           .           .      T38B3c
              .           .           .           .
              .           .           .           .
1309          .      C38B3c........................
              .           V
              .           V
1312          .      R380B3
              .           .
              .           .
1318          .           .       380B2
              .           .           .
              .           .           .
1328          .      C380B2............
              .           V
              .           V
1331          .      R380B2
              .           .
              .           .
1338          .           .       400B2
              .           .           .
              .           .           .
1348          .      C400B2............
              .           V
              .           V
1351          .      R400B2
              .           .
              .           .
1358          .           .       420A1
              .           .           .
              .           .           .
1372          .           .           .-------> B420A1
1368          .           .      D420A1
              .           .           .
              .           .           .
1377          .           .           .           .<-------  B420A1
1375          .           .           .      T420A1
              .           .           .           V
              .           .           .           V
1378          .           .           .      S420A1
              .           .           .           .
              .           .           .           .
1384       C420A...................................
              .
              .
1390          .           .<-------  TO390B
1387          .       R390B
              .           V
              .           V
1391          .      R390B1
              .           .
              .           .
1397          .           .        385C
              .           .           .
              .           .           .
1407          .           .           .        385B
              .           .           .           .
              .           .           .           .
1417          .           .           .           .        385A
              .           .           .           .           .
              .           .           .           .           .
1427          .           .           .           .           .        415B
              .           .           .           .           .           .
              .           .           .           .           .           .
```

```
1437          .           .      CP415B.................................
              .           .           .
              .           .           .
1444          .           .           .-------> BS415B
1[illegible]  .           .       D415B
              .           .           .
              .           .           .
1449          .           .           .           .<-------  BS415B
1447          .           .           .      RT415B
              .           .           .           V
              .           .           .           V
1450          .           .           .       S415B
              .           .           .           .
              .           .           .           .
1456          .           .      CC415B............
              .           .           V
              .           .           V
1459          .           .      R390A1
              .           .           .
              .           .           .
1466          .           .           .        390A
              .           .           .           .
              .           .           .           .
1476          .           .      CP390A............
              .           .           V
              .           .           V
1480          .           .      R390B2
              .           .           .
              .           .           .
1488          .           .           .        390B
              .           .           .           .
              .           .           .           .
1498          .      CP390B........................
              .           V
              .           V
1502          .       S390B
              .           .
              .           .
1511          .           .      420B05
              .           .           .
              .           .           .
[illegible]21 .      CPSD05............
              .           .
              .           .
1525          .           .      420B10
              .           .           .
              .           .           .
1535          .      CPSD10............
              .           .
              .           .
1539          .           .      420B15
              .           .           .
              .           .           .
1549          .      CPSD15............
              .           .
              .           .
1553          .           .      420B20
              .           .           .
              .           .           .
1563          .      CPSD20............
              .           .
              .           .
1567          .           .      420B25
              .           .           V
              .           .           V
1577          .           .      SFIRES
              .           .           .
              .           .           .
1585          .      CPSD25............
              .           .
              .           .
1589          .           .      420B30
              .           .           .
              .           .           .
1599          .      CPSD30............
              .           .
              .           .
[illegible]03 .           .      420B35
              .           .           V
              .           .           V
1613          .           .      SCHRCH
              .           .           .
              .           .           .
1622          .      CPSD35............
```

```
                .           .
                .           .
1626            .           .      420B40
                .           .           .
                .           .           .
1636            .      CPSD40............
                .           .
                .           .
1640            .           .      420B45
                .           .           .
                .           .           .
1650            .      CPSD45............
                .           .
                .           .
1659            .           .-------->    MCDB
1654            .      TOLSCH
                .           .
                .           .
1662            .           .         440
                .           .           V
                .           .           V
1672            .           .         R70
                .           .           .
                .           .           .
1678            .           .           .         441
                .           .           .           .
                .           .           .           .
1688            .           .       C108............
                .           .           .
                .           .           .
1693            .           .           .-------->   SPLIT
1691            .           .          D4
                .           .           V
                .           .           V
1696            .           .       R108
                .           .           .
                .           .           .
1702            .           .           .         442
                .           .           .           .
                .           .           .           .
1712            .           .         C67............
                .           .           .
                .           .           .
1718            .           .           .-------->  BASIN4
1715            .           .          D6
                .           .           .
                .           .           .
1723            .           .           .           .<-------  BASIN4
1721            .           .           .        RTD6
                .           .           .           V
                .           .           .           V
1724            .           .           .         SD6
                .           .           .           .
                .           .           .           .
1730            .           .         CD6............
                .           .           .
                .           .           .
1733            .           .           .         443
                .           .           .           .
                .           .           .           .
1746            .           .           .           .-------->   WSH66
1743            .           .           .         D66
                .           .           .           V
                .           .           .           V
1749            .           .           .        R113
                .           .           .           .
                .           .           .           .
1755            .           .       C114............
                .           .           .
                .           .           .
1758            .           .           .         444
                .           .           .           V
                .           .           .           V
1768            .           .           .         R58
                .           .           .           .
                .           .           .           .
1774            .           .           .           .         445
                .           .           .           .           .
                .           .           .           .           .
1784            .           .           .        C107............
                .           .           .           V
                .           .           .           V
1787            .           .           .        R107
                .           .           .           .
```

```
1795                                                  .<-------   SPLIT
1793                                            RTB2
                                                   V
                                                   V
                                            RSPLIT
1802                                                          446
1812                                   C109.......................
1818                                   .------->  WSH404
1815                                     D5
                                         V
                                         V
1821                                   R109
1827                                            447
1839                                                                .<-------  WSH404
1837                                                          RT404
                                                                 V
                                                                 V
1840                                                           R404
1846                                   C110.......................
                                         V
                                         V
1849                                   R110
1855                            C115............
                                   V
                                   V
                                R115
1864                                     448
1874                                            449
1884                                  C6364............
                                         V
                                         V
1887                                  R6364
1893                                            450
1903                                                          451
1913                                            C451............
1918                                                                .<-------   WSH66
1916                                                          RT66
1919                                                                          452
1929                                                          C6465............
                                                                 V
                                                                 V
1932                                                          R6566
1938                                   C116.......................
                                         V
                                         V
1941                                  BASIN5
                                         V
                                         V
1948                                   R116
```

```
                .           .           .           .
                .           .           .           .
1954            .           .           .           .         453
                .           .           .           .           .
                .           .           .           .           .
1964            .           .           .       C117............
                .           .           .           .
                .           .           .           .
1967            .           .       C118............
                .           .           V
                .           .           V
1970            .           .       R118
                .           .           .
                .           .           .
1979            .           .           .-------> BASIN6
1976            .           .         D7
                .           .           .
                .           .           .
1984            .           .           .           .<-------  BASIN6
1982            .           .           .       RTD7
                .           .           .           V
                .           .           .           V
1985            .           .           .         SD7
                .           .           .           .
                .           .           .           .
1991            .           .         CD7............
                .           .           .
                .           .           .
1994            .           .           .         454
                .           .           .           .
                .           .           .           .
2004            .           .       C454............
                .           .           V
                .           .           V
2007            .           .       R454
                .           .           .
                .           .           .
2014            .           .           .       415A
                .           .           .           .
                .           .           .           .
2024            .      CP415A......................
                .           .
                .           .
2033            .           .           .<-------    MCDB
2029            .           .       RMCDB
                .           .           V
                .           .           V
2034            .           .       SMCDB
                .           .           .
                .           .           .
2045            .      CPLSCH............
                .           V
                .           V
2049            .       R415A
                .           .
                .           .
2056            .           .         455
                .           .           .
                .           .           .
2071            .           .           .------->   BS455
2066            .           .       D455
                .           .           .
                .           .           .
2076            .           .           .           .<-------   BS455
2074            .           .           .       RT455
                .           .           .           V
                .           .           .           V
2077            .           .           .        S455
                .           .           .           .
                .           .           .           .
2083            .           .       C455............
                .           .           .
                .           .           .
2086       CC455......................
               V
               V
2089        S440
               V
               V
2098        R455
               .
               .
2104            .         480
                .           .
```

```
                .           .
2119            .           .-------->   BS480
2114            .        D480
                .           .
                .           .
                .           .            .<-------   BS480
2122            .           .       RT480
                .           .           V
                .           .           V
2125            .           .        S480
                .           .           .
                .           .           .
2131            .        C480............
                .           .
                .           .
2134         CC480............
                V
                V
2137         R480
                .
                .
2143            .         456
                .           .
                .           .
2156            .           .-------->  BASIN1
2153            .          D1
                .           .
                .           .
2162            .           .-------->    WA30
2159            .         CD2
                .           V
                .           V
2165            .        R456
                .           .
                .           .
2171            .           .         457
                .           .           .
                .           .           .
2181            .        C101............
                .           .
                .           .
2187            .           .-------->  BASIN2
2184            .          D3
                .           .
                .           .
2192            .           .            .<-------  BASIN2
2190            .           .        RTD3
                .           .           V
                .           .           V
2193            .           .         SD3
                .           .           .
                .           .           .
2199            .         CD3............
                .           V
                .           V
2202            .        R101
                .           .
                .           .
2208            .           .         458
                .           .           .
                .           .           .
2218            .        C103............
                .           V
                .           V
2221            .        R103
                .           .
                .           .
2229            .           .            .<-------    WA30
2227            .           .        RT30
                .           .           V
                .           .           V
2230            .           .         R30
                .           .           .
                .           .           .
2238            .           .           .           .<-------  BASIN1
2236            .           .           .        RTB1
                .           .           .           V
                .           .           .           V
2239            .           .           .          B1
                .           .           .           V
                .           .           .           V
2246            .           .           .         RB1
                .           .           .           .
                .           .           .           .
```

```
 2252          .           .        CDIV............
               .           .           .
               .           .           .
 2255          .           .           .         459
               .           .           .           .
               .           .           .           .
 2265          .           .         C52............
               .           .           V
               .           .           V
 2268          .           .         R52
               .           .           .
               .           .           .
 2274          .           .           .         460
               .           .           .           .
               .           .           .           .
 2284          .           .        C102............
               .           .           V
               .           .           V
 2287          .           .      BASIN3
               .           .           V
               .           .           V
 2294          .           .          R3
               .           .           .
               .           .           .
 2300          .           .           .         461
               .           .           .           .
               .           .           .           .
 2310          .           .        C104............
               .           .           .
               .           .           .
 2313          .        C106............
               .           V
               .           V
 2316          .        R106
               .           .
               .           .
 2322          .           .         462
               .           .           .
               .           .           .
 2332          .         C56............
               .           .
               .           .
 2335        C462............
               V
               V
 2338        R462
               V
               V
 2344       RR462
               .
               .
 2350          .         500
               .           .
               .           .
 2360        C500............

 (***) RUNOFF ALSO COMPUTED AT THIS LOCATION
1****************************************                    ****************************
 *                                      *                    *
 *   FLOOD HYDROGRAPH PACKAGE  (HEC-1)  *                    *    U.S. ARMY CORPS OF ENG
 *              JUN   1998              *                    *    HYDROLOGIC ENGINEERING
 *            VERSION 4.1               *                    *          609 SECOND STREE
 *                                      *                    *       DAVIS, CALIFORNIA 9
 *  RUN DATE   07APR06  TIME  14:16:42  *                    *           (916) 756-1104
 *                                      *                    *
 ****************************************                    ****************************
```

McDowell Road Basin and Storm Drain Design
This model assumes that the Oak Street detention basin is installed,
and all flows pass through the Thunder Mountain detention basin.

The Spook Hill ADMP model was uded as a base for this model
Return Period = 100 Years, Rainfall Duration = 24 Hours

Emergency spillway design for basin. Assume 48-inch diameter outlet is
plugged. Rating is just through emergency spillway.

METHODOLOGY

```
                    THE US CORPS OF ENGINEERS FLOW HYDROGRAPH PACKAGE HEC-1 DATED JUNE 1998 V4.1
                    SCS TYPE II RAINFALL DISTRIBUTION
                    CLARK UNIT HYDROGRAPH
                    GREEN AND AMPT INFILTRATION EQUATION USED FOR CALCULATING LOSSES
                    NORMAL DEPTH STORAGE CHANNEL ROUTING

 20 IO        OUTPUT CONTROL VARIABLES
                    IPRNT          5  PRINT CONTROL
                    IPLOT          0  PLOT CONTROL
                    QSCAL         0.  HYDROGRAPH PLOT SCALE

    IT        HYDROGRAPH TIME DATA
                     NMIN          2  MINUTES IN COMPUTATION INTERVAL
                    IDATE      1   0  STARTING DATE
                    ITIME       0000  STARTING TIME
                       NQ       2000  NUMBER OF HYDROGRAPH ORDINATES
                   NDDATE      3   0  ENDING DATE
                   NDTIME       1838  ENDING TIME
                    ICENT         19  CENTURY MARK

              COMPUTATION INTERVAL     .03 HOURS
                   TOTAL TIME BASE   66.63 HOURS

        ENGLISH UNITS
             DRAINAGE AREA          SQUARE MILES
             PRECIPITATION DEPTH    INCHES
             LENGTH, ELEVATION      FEET
             FLOW                   CUBIC FEET PER SECOND
             STORAGE VOLUME         ACRE-FEET
             SURFACE AREA           ACRES
             TEMPERATURE            DEGREES FAHRENHEIT

 22 JD        INDEX STORM NO. 1
                    STRM        3.81  PRECIPITATION DEPTH
                    TRDA         .01  TRANSPOSITION DRAINAGE AREA

 23 PI          PRECIPITATION PATTERN
                    .00       .00       .00       .00       .00       .00       .00       .00       .00       .00
                    .00       .00       .00       .00       .00       .00       .00       .00       .00       .00
                    .00       .00       .00       .00       .00       .00       .00       .00       .00       .00
                    .00       .00       .00       .00       .00       .00       .00       .00       .00       .00
                    .00       .00       .00       .00       .00       .00       .00       .00       .00       .00
                    .00       .00       .00       .00       .00       .00       .00       .00       .00       .00
                    .00       .00       .00       .00       .00       .00       .00       .00       .00       .00
                    .00       .00       .00       .00       .00       .00       .00       .00       .00       .00
                    .00       .00       .00       .00       .00       .00       .00       .00       .00       .00
                    .00       .00       .00       .00       .00       .00       .00       .00       .00       .00
                    .00       .00       .00       .00       .00       .00       .00       .00       .00       .00
                    .00       .00       .00       .00       .00       .00       .00       .00       .00       .00
                    .00       .00       .00       .00       .00       .00       .00       .00       .00       .00
                    .00       .00       .00       .00       .00       .00       .00       .00       .00       .00
                    .00       .00       .00       .00       .00       .00       .00       .00       .00       .00
                    .00       .00       .00       .00       .00       .00       .00       .00       .00       .00
                    .00       .00       .00       .00       .00       .00       .00       .00       .00       .00
                    .00       .00       .00       .00       .00       .00       .00       .00       .00       .00
                    .00       .00       .00       .00       .00       .00       .00       .00       .00       .00
                    .00       .00       .00       .00       .00       .00       .00       .00       .00       .00
                    .00       .00       .00       .00       .00       .00       .00       .00       .00       .00
                    .00       .00       .00       .00       .00       .00       .00       .00       .00       .00
                    .00       .00       .00       .00       .00       .00       .00       .00       .00       .00
                    .00       .00       .00       .00       .00       .00       .00       .00       .00       .00
                    .00       .00       .00       .00       .00       .00       .00       .00       .00       .00
                    .00       .00       .00       .00       .00       .00       .00       .00       .00       .00
                    .00       .00       .00       .00       .00       .00       .00       .00       .00       .00
                    .00       .00       .00       .00       .00       .00       .00       .00       .00       .00
                    .00       .00       .00       .00       .00       .00       .00       .00       .00       .00
                    .00       .00       .00       .00       .00       .00       .00       .00       .00       .00
                    .00       .00       .00       .00       .00       .00       .00       .00       .00       .00
                    .00       .00       .00       .00       .00       .00       .00       .00       .00       .00
                    .00       .00       .00       .00       .00       .01       .01       .01       .01       .01
                    .01       .01       .03       .04       .04       .04       .04       .04       .04       .04
                    .01       .01       .01       .01       .01       .01       .01       .00       .00       .00
                    .00       .00       .00       .00       .00       .00       .00       .00       .00       .00
                    .00       .00       .00       .00       .00       .00       .00       .00       .00       .00
                    .00       .00       .00       .00       .00       .00       .00       .00       .00       .00
                    .00       .00       .00       .00       .00       .00       .00       .00       .00       .00
                    .00       .00       .00       .00       .00       .00       .00       .00       .00       .00
                    .00       .00       .00       .00       .00       .00       .00       .00       .00       .00
                    .00       .00       .00       .00       .00       .00       .00       .00       .00       .00
                    .00       .00       .00       .00       .00       .00       .00       .00       .00       .00
                    .00       .00       .00       .00       .00       .00       .00       .00       .00       .00
```

.00	.00	.00	.00	.00	.00	.00	.00	.00	.00
.00	.00	.00	.00	.00	.00	.00	.00	.00	.00
.00	.00	.00	.00	.00	.00	.00	.00	.00	.00
.00	.00	.00	.00	.00	.00	.00	.00	.00	.00
.00	.00	.00	.00	.00	.00	.00	.00	.00	.00
.00	.00	.00	.00	.00	.00	.00	.00	.00	.00
.00	.00	.00	.00	.00	.00	.00	.00	.00	.00
.00	.00	.00	.00	.00	.00	.00	.00	.00	.00
.00	.00	.00	.00	.00	.00	.00	.00	.00	.00
.00	.00	.00	.00	.00	.00	.00	.00	.00	.00
.00	.00	.00	.00	.00	.00	.00	.00	.00	.00
.00	.00	.00	.00	.00	.00	.00	.00	.00	.00
.00	.00	.00	.00	.00	.00	.00	.00	.00	.00
.00	.00	.00	.00	.00	.00	.00	.00	.00	.00
.00	.00	.00	.00	.00	.00	.00	.00	.00	.00
.00	.00	.00	.00	.00	.00	.00	.00	.00	.00
.00	.00	.00	.00	.00	.00	.00	.00	.00	.00
.00	.00	.00	.00	.00	.00	.00	.00	.00	.00
.00	.00	.00	.00	.00	.00	.00	.00	.00	.00
.00	.00	.00	.00	.00	.00	.00	.00	.00	.00
.00	.00	.00	.00	.00	.00	.00	.00	.00	.00
.00	.00	.00	.00	.00	.00	.00	.00	.00	.00
.00	.00	.00	.00	.00	.00	.00	.00	.00	.00
.00	.00	.00	.00	.00	.00	.00	.00	.00	.00
.00	.00	.00	.00	.00	.00	.00	.00	.00	.00

33 JD INDEX STORM NO. 2
STRM 3.79 PRECIPITATION DEPTH
TRDA 1.00 TRANSPOSITION DRAINAGE AREA

0 PI PRECIPITATION PATTERN

.00	.00	.00	.00	.00	.00	.00	.00	.00	.00
.00	.00	.00	.00	.00	.00	.00	.00	.00	.00
.00	.00	.00	.00	.00	.00	.00	.00	.00	.00
.00	.00	.00	.00	.00	.00	.00	.00	.00	.00
.00	.00	.00	.00	.00	.00	.00	.00	.00	.00
.00	.00	.00	.00	.00	.00	.00	.00	.00	.00
.00	.00	.00	.00	.00	.00	.00	.00	.00	.00
.00	.00	.00	.00	.00	.00	.00	.00	.00	.00
.00	.00	.00	.00	.00	.00	.00	.00	.00	.00
.00	.00	.00	.00	.00	.00	.00	.00	.00	.00
.00	.00	.00	.00	.00	.00	.00	.00	.00	.00
.00	.00	.00	.00	.00	.00	.00	.00	.00	.00
.00	.00	.00	.00	.00	.00	.00	.00	.00	.00
.00	.00	.00	.00	.00	.00	.00	.00	.00	.00
.00	.00	.00	.00	.00	.00	.00	.00	.00	.00
.00	.00	.00	.00	.00	.00	.00	.00	.00	.00
.00	.00	.00	.00	.00	.00	.00	.00	.00	.00
.00	.00	.00	.00	.00	.00	.00	.00	.00	.00
.00	.00	.00	.00	.00	.00	.00	.00	.00	.00
.00	.00	.00	.00	.00	.00	.00	.00	.00	.00
.00	.00	.00	.00	.00	.00	.00	.00	.00	.00
.00	.00	.00	.00	.00	.00	.00	.00	.00	.00
.00	.00	.00	.00	.00	.00	.00	.00	.00	.00
.00	.00	.00	.00	.00	.00	.00	.00	.00	.00
.00	.00	.00	.00	.00	.00	.00	.00	.00	.00
.00	.00	.00	.00	.00	.00	.00	.00	.00	.00
.00	.00	.00	.00	.00	.00	.00	.00	.00	.00
.00	.00	.00	.00	.00	.00	.00	.00	.00	.00
.00	.00	.00	.00	.00	.00	.00	.00	.00	.00
.00	.00	.00	.00	.00	.00	.00	.00	.00	.00
.00	.00	.00	.00	.00	.00	.00	.00	.00	.00
.00	.00	.00	.00	.00	.00	.00	.00	.00	.00
.00	.00	.00	.00	.00	.00	.00	.00	.00	.00
.00	.00	.00	.00	.00	.00	.00	.00	.00	.00
.00	.00	.00	.00	.00	.00	.00	.00	.00	.00
.00	.00	.00	.00	.00	.00	.00	.00	.00	.00
.00	.00	.00	.00	.00	.01	.01	.01	.01	.01
.01	.01	.03	.04	.04	.04	.04	.04	.04	.04
.01	.01	.01	.01	.01	.01	.01	.00	.00	.00
.00	.00	.00	.00	.00	.00	.00	.00	.00	.00
.00	.00	.00	.00	.00	.00	.00	.00	.00	.00
.00	.00	.00	.00	.00	.00	.00	.00	.00	.00
.00	.00	.00	.00	.00	.00	.00	.00	.00	.00
.00	.00	.00	.00	.00	.00	.00	.00	.00	.00
.00	.00	.00	.00	.00	.00	.00	.00	.00	.00
.00	.00	.00	.00	.00	.00	.00	.00	.00	.00
.00	.00	.00	.00	.00	.00	.00	.00	.00	.00
.00	.00	.00	.00	.00	.00	.00	.00	.00	.00
.00	.00	.00	.00	.00	.00	.00	.00	.00	.00
.00	.00	.00	.00	.00	.00	.00	.00	.00	.00
.00	.00	.00	.00	.00	.00	.00	.00	.00	.00
.00	.00	.00	.00	.00	.00	.00	.00	.00	.00
.00	.00	.00	.00	.00	.00	.00	.00	.00	.00
.00	.00	.00	.00	.00	.00	.00	.00	.00	.00
.00	.00	.00	.00	.00	.00	.00	.00	.00	.00
.00	.00	.00	.00	.00	.00	.00	.00	.00	.00
.00	.00	.00	.00	.00	.00	.00	.00	.00	.00

```
                 .00       .00       .00       .00       .00       .00       .00       .00       .00       .00
                 .00       .00       .00       .00       .00       .00       .00       .00       .00       .00
                 .00       .00       .00       .00       .00       .00       .00       .00       .00       .00
                 .00       .00       .00       .00       .00       .00       .00       .00       .00       .00
                 .00       .00       .00       .00       .00       .00       .00       .00       .00       .00
                 .00       .00       .00       .00       .00       .00       .00       .00       .00       .00
                 .00       .00       .00       .00       .00       .00       .00       .00       .00       .00
                 .00       .00       .00       .00       .00       .00       .00       .00       .00       .00
                 .00       .00       .00       .00       .00       .00       .00       .00       .00       .00
                 .00       .00       .00       .00       .00       .00       .00       .00       .00       .00
                 .00       .00       .00       .00       .00       .00       .00       .00       .00       .00
                 .00       .00       .00       .00       .00       .00       .00       .00       .00       .00
                 .00       .00       .00       .00       .00       .00       .00       .00       .00       .00
                 .00       .00       .00       .00       .00       .00       .00       .00       .00       .00
                 .00       .00       .00       .00       .00       .00       .00       .00       .00       .00
                 .00       .00       .00       .00       .00       .00       .00       .00       .00       .00
                 .00       .00       .00       .00       .00       .00       .00       .00       .00       .00
                 .00       .00       .00       .00       .00       .00       .00       .00       .00       .00
                 .00       .00       .00       .00       .00       .00       .00       .00       .00       .00

 34 JD          INDEX STORM NO. 3
                     STRM       3.68  PRECIPITATION DEPTH
                     TRDA       5.80  TRANSPOSITION DRAINAGE AREA

  0 PI            PRECIPITATION PATTERN
                 .00       .00       .00       .00       .00       .00       .00       .00       .00       .00
                 .00       .00       .00       .00       .00       .00       .00       .00       .00       .00
                 .00       .00       .00       .00       .00       .00       .00       .00       .00       .00
                 .00       .00       .00       .00       .00       .00       .00       .00       .00       .00
                 .00       .00       .00       .00       .00       .00       .00       .00       .00       .00
                 .00       .00       .00       .00       .00       .00       .00       .00       .00       .00
                 .00       .00       .00       .00       .00       .00       .00       .00       .00       .00
                 .00       .00       .00       .00       .00       .00       .00       .00       .00       .00
                 .00       .00       .00       .00       .00       .00       .00       .00       .00       .00
                 .00       .00       .00       .00       .00       .00       .00       .00       .00       .00
                 .00       .00       .00       .00       .00       .00       .00       .00       .00       .00
                 .00       .00       .00       .00       .00       .00       .00       .00       .00       .00
                 .00       .00       .00       .00       .00       .00       .00       .00       .00       .00
                 .00       .00       .00       .00       .00       .00       .00       .00       .00       .00
                 .00       .00       .00       .00       .00       .00       .00       .00       .00       .00
                 .00       .00       .00       .00       .00       .00       .00       .00       .00       .00
                 .00       .00       .00       .00       .00       .00       .00       .00       .00       .00
                 .00       .00       .00       .00       .00       .00       .00       .00       .00       .00
                 .00       .00       .00       .00       .00       .00       .00       .00       .00       .00
                 .00       .00       .00       .00       .00       .00       .00       .00       .00       .00
                 .00       .00       .00       .00       .00       .00       .00       .00       .00       .00
                 .00       .00       .00       .00       .00       .00       .00       .00       .00       .00
                 .00       .00       .00       .00       .00       .00       .00       .00       .00       .00
                 .00       .00       .00       .00       .00       .00       .00       .00       .00       .00
                 .00       .00       .00       .00       .00       .00       .00       .00       .00       .00
                 .00       .00       .00       .00       .00       .00       .00       .00       .00       .00
                 .00       .00       .00       .00       .00       .00       .00       .00       .00       .00
                 .00       .00       .00       .00       .00       .00       .00       .00       .00       .00
                 .00       .00       .00       .00       .00       .00       .00       .00       .00       .00
                 .00       .00       .00       .00       .00       .00       .00       .00       .00       .00
                 .00       .00       .00       .00       .00       .00       .00       .00       .00       .00
                 .00       .00       .00       .00       .00       .00       .00       .00       .00       .00
                 .00       .00       .00       .00       .00       .00       .00       .00       .00       .00
                 .00       .00       .00       .00       .00       .00       .00       .00       .00       .00
                 .00       .00       .00       .00       .00       .01       .01       .01       .01       .01
                 .01       .01       .03       .04       .04       .04       .04       .04       .04       .04
                 .01       .01       .01       .01       .01       .01       .01       .00       .00       .00
                 .00       .00       .00       .00       .00       .00       .00       .00       .00       .00
                 .00       .00       .00       .00       .00       .00       .00       .00       .00       .00
                 .00       .00       .00       .00       .00       .00       .00       .00       .00       .00
                 .00       .00       .00       .00       .00       .00       .00       .00       .00       .00
                 .00       .00       .00       .00       .00       .00       .00       .00       .00       .00
                 .00       .00       .00       .00       .00       .00       .00       .00       .00       .00
                 .00       .00       .00       .00       .00       .00       .00       .00       .00       .00
                 .00       .00       .00       .00       .00       .00       .00       .00       .00       .00
                 .00       .00       .00       .00       .00       .00       .00       .00       .00       .00
                 .00       .00       .00       .00       .00       .00       .00       .00       .00       .00
                 .00       .00       .00       .00       .00       .00       .00       .00       .00       .00
                 .00       .00       .00       .00       .00       .00       .00       .00       .00       .00
                 .00       .00       .00       .00       .00       .00       .00       .00       .00       .00
                 .00       .00       .00       .00       .00       .00       .00       .00       .00       .00
                 .00       .00       .00       .00       .00       .00       .00       .00       .00       .00
                 .00       .00       .00       .00       .00       .00       .00       .00       .00       .00
                 .00       .00       .00       .00       .00       .00       .00       .00       .00       .00
                 .00       .00       .00       .00       .00       .00       .00       .00       .00       .00
                 .00       .00       .00       .00       .00       .00       .00       .00       .00       .00
                 .00       .00       .00       .00       .00       .00       .00       .00       .00       .00
                 .00       .00       .00       .00       .00       .00       .00       .00       .00       .00
                 .00       .00       .00       .00       .00       .00       .00       .00       .00       .00
```

```
                   .00      .00      .00      .00      .00      .00      .00      .00      .00      .00
                   .00      .00      .00      .00      .00      .00      .00      .00      .00      .00
                   .00      .00      .00      .00      .00      .00      .00      .00      .00      .00
                   .00      .00      .00      .00      .00      .00      .00      .00      .00      .00
                   .00      .00      .00      .00      .00      .00      .00      .00      .00      .00
                   .00      .00      .00      .00      .00      .00      .00      .00      .00      .00
                   .00      .00      .00      .00      .00      .00      .00      .00      .00      .00
                   .00      .00      .00      .00      .00      .00      .00      .00      .00      .00
                   .00      .00      .00      .00      .00      .00      .00      .00      .00      .00
                   .00      .00      .00      .00      .00      .00      .00      .00      .00      .00
                   .00      .00      .00      .00      .00      .00      .00      .00      .00      .00
                   .00      .00      .00      .00      .00      .00      .00      .00      .00      .00
                   .00      .00      .00      .00      .00      .00      .00      .00      .00      .00

  35 JD        INDEX STORM NO. 4
                  STRM      3.57  PRECIPITATION DEPTH
                  TRDA     10.66  TRANSPOSITION DRAINAGE AREA

   0 PI          PRECIPITATION PATTERN
                   .00      .00      .00      .00      .00      .00      .00      .00      .00      .00
                   .00      .00      .00      .00      .00      .00      .00      .00      .00      .00
                   .00      .00      .00      .00      .00      .00      .00      .00      .00      .00
                   .00      .00      .00      .00      .00      .00      .00      .00      .00      .00
                   .00      .00      .00      .00      .00      .00      .00      .00      .00      .00
                   .00      .00      .00      .00      .00      .00      .00      .00      .00      .00
                   .00      .00      .00      .00      .00      .00      .00      .00      .00      .00
                   .00      .00      .00      .00      .00      .00      .00      .00      .00      .00
                   .00      .00      .00      .00      .00      .00      .00      .00      .00      .00
                   .00      .00      .00      .00      .00      .00      .00      .00      .00      .00
                   .00      .00      .00      .00      .00      .00      .00      .00      .00      .00
                   .00      .00      .00      .00      .00      .00      .00      .00      .00      .00
                   .00      .00      .00      .00      .00      .00      .00      .00      .00      .00
                   .00      .00      .00      .00      .00      .00      .00      .00      .00      .00
                   .00      .00      .00      .00      .00      .00      .00      .00      .00      .00
                   .00      .00      .00      .00      .00      .00      .00      .00      .00      .00
                   .00      .00      .00      .00      .00      .00      .00      .00      .00      .00
                   .00      .00      .00      .00      .00      .00      .00      .00      .00      .00
                   .00      .00      .00      .00      .00      .00      .00      .00      .00      .00
                   .00      .00      .00      .00      .00      .00      .00      .00      .00      .00
                   .00      .00      .00      .00      .00      .00      .00      .00      .00      .00
                   .00      .00      .00      .00      .00      .00      .00      .00      .00      .00
                   .00      .00      .00      .00      .00      .00      .00      .00      .00      .00
                   .00      .00      .00      .00      .00      .00      .00      .00      .00      .00
                   .00      .00      .00      .00      .00      .00      .00      .00      .00      .00
                   .00      .00      .00      .00      .00      .00      .00      .00      .00      .00
                   .00      .00      .00      .00      .00      .00      .00      .00      .00      .00
                   .00      .00      .00      .00      .00      .00      .00      .00      .00      .00
                   .00      .00      .00      .00      .00      .00      .00      .00      .00      .00
                   .00      .00      .00      .00      .00      .00      .00      .00      .00      .00
                   .00      .00      .00      .00      .00      .00      .00      .00      .00      .00
                   .00      .00      .00      .00      .00      .00      .00      .00      .00      .00
                   .00      .00      .00      .00      .00      .00      .00      .00      .00      .00
                   .00      .00      .00      .00      .00      .00      .00      .00      .00      .00
                   .00      .00      .00      .00      .00      .01      .01      .01      .01      .01
                   .01      .01      .03      .04      .04      .04      .04      .04      .04      .04
                   .01      .01      .01      .01      .01      .01      .01      .00      .00      .00
                   .00      .00      .00      .00      .00      .00      .00      .00      .00      .00
                   .00      .00      .00      .00      .00      .00      .00      .00      .00      .00
                   .00      .00      .00      .00      .00      .00      .00      .00      .00      .00
                   .00      .00      .00      .00      .00      .00      .00      .00      .00      .00
                   .00      .00      .00      .00      .00      .00      .00      .00      .00      .00
                   .00      .00      .00      .00      .00      .00      .00      .00      .00      .00
                   .00      .00      .00      .00      .00      .00      .00      .00      .00      .00
                   .00      .00      .00      .00      .00      .00      .00      .00      .00      .00
                   .00      .00      .00      .00      .00      .00      .00      .00      .00      .00
                   .00      .00      .00      .00      .00      .00      .00      .00      .00      .00
                   .00      .00      .00      .00      .00      .00      .00      .00      .00      .00
                   .00      .00      .00      .00      .00      .00      .00      .00      .00      .00
                   .00      .00      .00      .00      .00      .00      .00      .00      .00      .00
                   .00      .00      .00      .00      .00      .00      .00      .00      .00      .00
                   .00      .00      .00      .00      .00      .00      .00      .00      .00      .00
                   .00      .00      .00      .00      .00      .00      .00      .00      .00      .00
                   .00      .00      .00      .00      .00      .00      .00      .00      .00      .00
                   .00      .00      .00      .00      .00      .00      .00      .00      .00      .00
                   .00      .00      .00      .00      .00      .00      .00      .00      .00      .00
                   .00      .00      .00      .00      .00      .00      .00      .00      .00      .00
                   .00      .00      .00      .00      .00      .00      .00      .00      .00      .00
                   .00      .00      .00      .00      .00      .00      .00      .00      .00      .00
                   .00      .00      .00      .00      .00      .00      .00      .00      .00      .00
                   .00      .00      .00      .00      .00      .00      .00      .00      .00      .00
                   .00      .00      .00      .00      .00      .00      .00      .00      .00      .00
                   .00      .00      .00      .00      .00      .00      .00      .00      .00      .00
                   .00      .00      .00      .00      .00      .00      .00      .00      .00      .00
                   .00      .00      .00      .00      .00      .00      .00      .00      .00      .00
```

.00	.00	.00	.00	.00	.00	.00	.00	.00	.00
.00	.00	.00	.00	.00	.00	.00	.00	.00	.00
.00	.00	.00	.00	.00	.00	.00	.00	.00	.00
.00	.00	.00	.00	.00	.00	.00	.00	.00	.00
.00	.00	.00	.00	.00	.00	.00	.00	.00	.00
.00	.00	.00	.00	.00	.00	.00	.00	.00	.00
.00	.00	.00	.00	.00	.00	.00	.00	.00	.00

36 JD INDEX STORM NO. 5
STRM 3.54 PRECIPITATION DEPTH
TRDA 13.70 TRANSPOSITION DRAINAGE AREA

0 PI PRECIPITATION PATTERN

.00	.00	.00	.00	.00	.00	.00	.00	.00	.00
.00	.00	.00	.00	.00	.00	.00	.00	.00	.00
.00	.00	.00	.00	.00	.00	.00	.00	.00	.00
.00	.00	.00	.00	.00	.00	.00	.00	.00	.00
.00	.00	.00	.00	.00	.00	.00	.00	.00	.00
.00	.00	.00	.00	.00	.00	.00	.00	.00	.00
.00	.00	.00	.00	.00	.00	.00	.00	.00	.00
.00	.00	.00	.00	.00	.00	.00	.00	.00	.00
.00	.00	.00	.00	.00	.00	.00	.00	.00	.00
.00	.00	.00	.00	.00	.00	.00	.00	.00	.00
.00	.00	.00	.00	.00	.00	.00	.00	.00	.00
.00	.00	.00	.00	.00	.00	.00	.00	.00	.00
.00	.00	.00	.00	.00	.00	.00	.00	.00	.00
.00	.00	.00	.00	.00	.00	.00	.00	.00	.00
.00	.00	.00	.00	.00	.00	.00	.00	.00	.00
.00	.00	.00	.00	.00	.00	.00	.00	.00	.00
.00	.00	.00	.00	.00	.00	.00	.00	.00	.00
.00	.00	.00	.00	.00	.00	.00	.00	.00	.00
.00	.00	.00	.00	.00	.00	.00	.00	.00	.00
.00	.00	.00	.00	.00	.00	.00	.00	.00	.00
.00	.00	.00	.00	.00	.00	.00	.00	.00	.00
.00	.00	.00	.00	.00	.00	.00	.00	.00	.00
.00	.00	.00	.00	.00	.00	.00	.00	.00	.00
.00	.00	.00	.00	.00	.00	.00	.00	.00	.00
.00	.00	.00	.00	.00	.00	.00	.00	.00	.00
.00	.00	.00	.00	.00	.00	.00	.00	.00	.00
.00	.00	.00	.00	.00	.00	.00	.00	.00	.00
.00	.00	.00	.00	.00	.00	.00	.00	.00	.00
.00	.00	.00	.00	.00	.00	.00	.00	.00	.00
.00	.00	.00	.00	.00	.00	.00	.00	.00	.00
.00	.00	.00	.00	.00	.00	.00	.00	.00	.00
.00	.00	.00	.00	.00	.00	.00	.00	.00	.00
.00	.00	.00	.00	.00	.00	.00	.00	.00	.00
.00	.00	.00	.00	.00	.00	.00	.00	.00	.00
.00	.00	.00	.00	.00	.01	.01	.01	.01	.01
.01	.01	.03	.04	.04	.04	.04	.04	.04	.04
.01	.01	.01	.01	.01	.01	.01	.00	.00	.00
.00	.00	.00	.00	.00	.00	.00	.00	.00	.00
.00	.00	.00	.00	.00	.00	.00	.00	.00	.00
.00	.00	.00	.00	.00	.00	.00	.00	.00	.00
.00	.00	.00	.00	.00	.00	.00	.00	.00	.00
.00	.00	.00	.00	.00	.00	.00	.00	.00	.00
.00	.00	.00	.00	.00	.00	.00	.00	.00	.00
.00	.00	.00	.00	.00	.00	.00	.00	.00	.00
.00	.00	.00	.00	.00	.00	.00	.00	.00	.00
.00	.00	.00	.00	.00	.00	.00	.00	.00	.00
.00	.00	.00	.00	.00	.00	.00	.00	.00	.00
.00	.00	.00	.00	.00	.00	.00	.00	.00	.00
.00	.00	.00	.00	.00	.00	.00	.00	.00	.00
.00	.00	.00	.00	.00	.00	.00	.00	.00	.00
.00	.00	.00	.00	.00	.00	.00	.00	.00	.00
.00	.00	.00	.00	.00	.00	.00	.00	.00	.00
.00	.00	.00	.00	.00	.00	.00	.00	.00	.00
.00	.00	.00	.00	.00	.00	.00	.00	.00	.00
.00	.00	.00	.00	.00	.00	.00	.00	.00	.00
.00	.00	.00	.00	.00	.00	.00	.00	.00	.00
.00	.00	.00	.00	.00	.00	.00	.00	.00	.00
.00	.00	.00	.00	.00	.00	.00	.00	.00	.00
.00	.00	.00	.00	.00	.00	.00	.00	.00	.00
.00	.00	.00	.00	.00	.00	.00	.00	.00	.00
.00	.00	.00	.00	.00	.00	.00	.00	.00	.00
.00	.00	.00	.00	.00	.00	.00	.00	.00	.00
.00	.00	.00	.00	.00	.00	.00	.00	.00	.00
.00	.00	.00	.00	.00	.00	.00	.00	.00	.00
.00	.00	.00	.00	.00	.00	.00	.00	.00	.00
.00	.00	.00	.00	.00	.00	.00	.00	.00	.00
.00	.00	.00	.00	.00	.00	.00	.00	.00	.00
.00	.00	.00	.00	.00	.00	.00	.00	.00	.00
.00	.00	.00	.00	.00	.00	.00	.00	.00	.00
.00	.00	.00	.00	.00	.00	.00	.00	.00	.00
.00	.00	.00	.00	.00	.00	.00	.00	.00	.00

.00	.00	.00	.00	.00	.00	.00	.00	.00	.00

37 JD INDEX STORM NO. 6
STRM 3.47 PRECIPITATION DEPTH
TRDA 20.00 TRANSPOSITION DRAINAGE AREA

0 PI PRECIPITATION PATTERN

.00	.00	.00	.00	.00	.00	.00	.00	.00	.00
.00	.00	.00	.00	.00	.00	.00	.00	.00	.00
.00	.00	.00	.00	.00	.00	.00	.00	.00	.00
.00	.00	.00	.00	.00	.00	.00	.00	.00	.00
.00	.00	.00	.00	.00	.00	.00	.00	.00	.00
.00	.00	.00	.00	.00	.00	.00	.00	.00	.00
.00	.00	.00	.00	.00	.00	.00	.00	.00	.00
.00	.00	.00	.00	.00	.00	.00	.00	.00	.00
.00	.00	.00	.00	.00	.00	.00	.00	.00	.00
.00	.00	.00	.00	.00	.00	.00	.00	.00	.00
.00	.00	.00	.00	.00	.00	.00	.00	.00	.00
.00	.00	.00	.00	.00	.00	.00	.00	.00	.00
.00	.00	.00	.00	.00	.00	.00	.00	.00	.00
.00	.00	.00	.00	.00	.00	.00	.00	.00	.00
.00	.00	.00	.00	.00	.00	.00	.00	.00	.00
.00	.00	.00	.00	.00	.00	.00	.00	.00	.00
.00	.00	.00	.00	.00	.00	.00	.00	.00	.00
.00	.00	.00	.00	.00	.00	.00	.00	.00	.00
.00	.00	.00	.00	.00	.00	.00	.00	.00	.00
.00	.00	.00	.00	.00	.00	.00	.00	.00	.00
.00	.00	.00	.00	.00	.00	.00	.00	.00	.00
.00	.00	.00	.00	.00	.00	.00	.00	.00	.00
.00	.00	.00	.00	.00	.00	.00	.00	.00	.00
.00	.00	.00	.00	.00	.00	.00	.00	.00	.00
.00	.00	.00	.00	.00	.00	.00	.00	.00	.00
.00	.00	.00	.00	.00	.00	.00	.00	.00	.00
.00	.00	.00	.00	.00	.00	.00	.00	.00	.00
.00	.00	.00	.00	.00	.00	.00	.00	.00	.00
.00	.00	.00	.00	.00	.00	.00	.00	.00	.00
.00	.00	.00	.00	.00	.00	.00	.00	.00	.00
.00	.00	.00	.00	.00	.00	.00	.00	.00	.00
.00	.00	.00	.00	.00	.00	.00	.00	.00	.00
.00	.00	.00	.00	.00	.00	.00	.00	.00	.00
.00	.00	.00	.00	.00	.00	.00	.00	.00	.00
.00	.00	.00	.00	.00	.01	.01	.01	.01	.01
.01	.01	.03	.04	.04	.04	.04	.04	.04	.04
.01	.01	.01	.01	.01	.01	.01	.00	.00	.00
.00	.00	.00	.00	.00	.00	.00	.00	.00	.00
.00	.00	.00	.00	.00	.00	.00	.00	.00	.00
.00	.00	.00	.00	.00	.00	.00	.00	.00	.00
.00	.00	.00	.00	.00	.00	.00	.00	.00	.00
.00	.00	.00	.00	.00	.00	.00	.00	.00	.00
.00	.00	.00	.00	.00	.00	.00	.00	.00	.00
.00	.00	.00	.00	.00	.00	.00	.00	.00	.00
.00	.00	.00	.00	.00	.00	.00	.00	.00	.00
.00	.00	.00	.00	.00	.00	.00	.00	.00	.00
.00	.00	.00	.00	.00	.00	.00	.00	.00	.00
.00	.00	.00	.00	.00	.00	.00	.00	.00	.00
.00	.00	.00	.00	.00	.00	.00	.00	.00	.00
.00	.00	.00	.00	.00	.00	.00	.00	.00	.00
.00	.00	.00	.00	.00	.00	.00	.00	.00	.00
.00	.00	.00	.00	.00	.00	.00	.00	.00	.00
.00	.00	.00	.00	.00	.00	.00	.00	.00	.00
.00	.00	.00	.00	.00	.00	.00	.00	.00	.00
.00	.00	.00	.00	.00	.00	.00	.00	.00	.00
.00	.00	.00	.00	.00	.00	.00	.00	.00	.00
.00	.00	.00	.00	.00	.00	.00	.00	.00	.00
.00	.00	.00	.00	.00	.00	.00	.00	.00	.00
.00	.00	.00	.00	.00	.00	.00	.00	.00	.00
.00	.00	.00	.00	.00	.00	.00	.00	.00	.00
.00	.00	.00	.00	.00	.00	.00	.00	.00	.00
.00	.00	.00	.00	.00	.00	.00	.00	.00	.00
.00	.00	.00	.00	.00	.00	.00	.00	.00	.00
.00	.00	.00	.00	.00	.00	.00	.00	.00	.00
.00	.00	.00	.00	.00	.00	.00	.00	.00	.00
.00	.00	.00	.00	.00	.00	.00	.00	.00	.00
.00	.00	.00	.00	.00	.00	.00	.00	.00	.00
.00	.00	.00	.00	.00	.00	.00	.00	.00	.00
.00	.00	.00	.00	.00	.00	.00	.00	.00	.00
.00	.00	.00	.00	.00	.00	.00	.00	.00	.00
.00	.00	.00	.00	.00	.00	.00	.00	.00	.00
.00	.00	.00	.00	.00	.00	.00	.00	.00	.00

38 JD INDEX STORM NO. 7
STRM 3.32 PRECIPITATION DEPTH
TRDA 50.00 TRANSPOSITION DRAINAGE AREA

0 PI PRECIPITATION PATTERN

.00	.00	.00	.00	.00	.00	.00	.00	.00	.00
.00	.00	.00	.00	.00	.00	.00	.00	.00	.00
.00	.00	.00	.00	.00	.00	.00	.00	.00	.00
.00	.00	.00	.00	.00	.00	.00	.00	.00	.00
.00	.00	.00	.00	.00	.00	.00	.00	.00	.00
.00	.00	.00	.00	.00	.00	.00	.00	.00	.00
.00	.00	.00	.00	.00	.00	.00	.00	.00	.00
.00	.00	.00	.00	.00	.00	.00	.00	.00	.00
.00	.00	.00	.00	.00	.00	.00	.00	.00	.00
.00	.00	.00	.00	.00	.00	.00	.00	.00	.00
.00	.00	.00	.00	.00	.00	.00	.00	.00	.00
.00	.00	.00	.00	.00	.00	.00	.00	.00	.00
.00	.00	.00	.00	.00	.00	.00	.00	.00	.00
.00	.00	.00	.00	.00	.00	.00	.00	.00	.00
.00	.00	.00	.00	.00	.00	.00	.00	.00	.00
.00	.00	.00	.00	.00	.00	.00	.00	.00	.00
.00	.00	.00	.00	.00	.00	.00	.00	.00	.00
.00	.00	.00	.00	.00	.00	.00	.00	.00	.00
.00	.00	.00	.00	.00	.00	.00	.00	.00	.00
.00	.00	.00	.00	.00	.00	.00	.00	.00	.00
.00	.00	.00	.00	.00	.00	.00	.00	.00	.00
.00	.00	.00	.00	.00	.00	.00	.00	.00	.00
.00	.00	.00	.00	.00	.00	.00	.00	.00	.00
.00	.00	.00	.00	.00	.00	.00	.00	.00	.00
.00	.00	.00	.00	.00	.00	.00	.00	.00	.00
.00	.00	.00	.00	.00	.00	.00	.00	.00	.00
.00	.00	.00	.00	.00	.00	.00	.00	.00	.00
.00	.00	.00	.00	.00	.00	.00	.00	.00	.00
.00	.00	.00	.00	.00	.00	.00	.00	.00	.00
.00	.00	.00	.00	.00	.00	.00	.00	.00	.00
.00	.00	.00	.00	.00	.00	.00	.00	.00	.00
.00	.00	.00	.00	.00	.00	.00	.00	.00	.00
.00	.00	.00	.00	.00	.00	.00	.00	.00	.00
.00	.00	.00	.00	.00	.00	.00	.00	.00	.00
.00	.00	.00	.00	.00	.01	.01	.01	.01	.01
.01	.01	.03	.04	.04	.04	.04	.04	.04	.04
.01	.01	.01	.01	.01	.01	.01	.00	.00	.00
.00	.00	.00	.00	.00	.00	.00	.00	.00	.00
.00	.00	.00	.00	.00	.00	.00	.00	.00	.00
.00	.00	.00	.00	.00	.00	.00	.00	.00	.00
.00	.00	.00	.00	.00	.00	.00	.00	.00	.00
.00	.00	.00	.00	.00	.00	.00	.00	.00	.00
.00	.00	.00	.00	.00	.00	.00	.00	.00	.00
.00	.00	.00	.00	.00	.00	.00	.00	.00	.00
.00	.00	.00	.00	.00	.00	.00	.00	.00	.00
.00	.00	.00	.00	.00	.00	.00	.00	.00	.00
.00	.00	.00	.00	.00	.00	.00	.00	.00	.00
.00	.00	.00	.00	.00	.00	.00	.00	.00	.00
.00	.00	.00	.00	.00	.00	.00	.00	.00	.00
.00	.00	.00	.00	.00	.00	.00	.00	.00	.00
.00	.00	.00	.00	.00	.00	.00	.00	.00	.00
.00	.00	.00	.00	.00	.00	.00	.00	.00	.00
.00	.00	.00	.00	.00	.00	.00	.00	.00	.00
.00	.00	.00	.00	.00	.00	.00	.00	.00	.00
.00	.00	.00	.00	.00	.00	.00	.00	.00	.00
.00	.00	.00	.00	.00	.00	.00	.00	.00	.00
.00	.00	.00	.00	.00	.00	.00	.00	.00	.00
.00	.00	.00	.00	.00	.00	.00	.00	.00	.00
.00	.00	.00	.00	.00	.00	.00	.00	.00	.00
.00	.00	.00	.00	.00	.00	.00	.00	.00	.00
.00	.00	.00	.00	.00	.00	.00	.00	.00	.00
.00	.00	.00	.00	.00	.00	.00	.00	.00	.00
.00	.00	.00	.00	.00	.00	.00	.00	.00	.00
.00	.00	.00	.00	.00	.00	.00	.00	.00	.00
.00	.00	.00	.00	.00	.00	.00	.00	.00	.00
.00	.00	.00	.00	.00	.00	.00	.00	.00	.00
.00	.00	.00	.00	.00	.00	.00	.00	.00	.00
.00	.00	.00	.00	.00	.00	.00	.00	.00	.00
.00	.00	.00	.00	.00	.00	.00	.00	.00	.00
.00	.00	.00	.00	.00	.00	.00	.00	.00	.00
.00	.00	.00	.00	.00	.00	.00	.00	.00	.00
.00	.00	.00	.00	.00	.00	.00	.00	.00	.00

WARNING EXCESS AT PONDING LESS THAN ZERO FOR PERIOD. EXCESS SET TO ZERO
WARNING EXCESS AT PONDING LESS THAN ZERO FOR PERIOD. EXCESS SET TO ZERO

*** ***

```
          **************
          *            *
1654 KK   *   TOLSCH   *
```

```
            *            *
            **************

 1655 KO          OUTPUT CONTROL VARIABLES
                        IPRNT           3  PRINT CONTROL
                        IPLOT           0  PLOT CONTROL
                        QSCAL          0.  HYDROGRAPH PLOT SCALE
                            Divert out of storm drain through splitter structure.  Divert flow amount
                            such that the flow at CP415A is less than or equal to 1528 cfs, the
                            capacity of LasSendas channel.

      DT          DIVERSION
                        ISTAD        MCDB  DIVERSION HYDROGRAPH IDENTIFICATION

      DI              INFLOW         .00    331.00    419.00    558.00    658.00    693.00    728.00    901.00   1043.00

      DQ       DIVERTED FLOW         .00       .00     61.00    176.00    262.00    292.00    323.00    473.00    594.00

                                                                    ***

       ***             ***             ***             ***             ***

                          DIVERSION HYDROGRAPH     MCDB
                        TRANSPOSITION AREA       .0 SQ MI

  PEAK FLOW     TIME                          MAXIMUM AVERAGE FLOW
                                        6-HR       24-HR       72-HR     66.63-HR
+   (CFS)       (HR)
                            (CFS)
+     317.     12.17                     25.          6.          2.          2.
                        (INCHES)       .146        .146        .146        .146
                         (AC-FT)        12.         12.         12.         12.

                         CUMULATIVE AREA =    1.59 SQ MI


       ***             ***             ***             ***             ***

                          HYDROGRAPH AT STATION   TOLSCH
                        TRANSPOSITION AREA       .0 SQ MI

  PEAK FLOW     TIME                          MAXIMUM AVERAGE FLOW
                                        6-HR       24-HR       72-HR     66.63-HR
+   (CFS)       (HR)
                            (CFS)
+     404.     12.17                    132.         48.         18.         18.
                        (INCHES)       .776       1.114       1.171       1.171
                         (AC-FT)        66.         94.         99.         99.

                         CUMULATIVE AREA =    1.59 SQ MI


       ***             ***             ***             ***             ***

                          DIVERSION HYDROGRAPH     MCDB
                        TRANSPOSITION AREA      1.0 SQ MI

  PEAK FLOW     TIME                          MAXIMUM AVERAGE FLOW
                                        6-HR       24-HR       72-HR     66.63-HR
+   (CFS)       (HR)
                            (CFS)
+     313.     12.17                     24.          6.          2.          2.
                        (INCHES)       .142        .142        .142        .142
                         (AC-FT)        12.         12.         12.         12.

                         CUMULATIVE AREA =    1.59 SQ MI


       ***             ***             ***             ***             ***

                          HYDROGRAPH AT STATION   TOLSCH
                        TRANSPOSITION AREA      1.0 SQ MI

  PEAK FLOW     TIME                          MAXIMUM AVERAGE FLOW
                                        6-HR       24-HR       72-HR     66.63-HR
+   (CFS)       (HR)
                            (CFS)
+     404.     12.17                    132.         47.         18.         18.
                        (INCHES)       .772       1.107       1.163       1.163
                         (AC-FT)        65.         94.         98.         98.

                         CUMULATIVE AREA =    1.59 SQ MI
```

```
      ***              ***              ***              ***              ***

                         DIVERSION HYDROGRAPH      MCDB
                       TRANSPOSITION AREA       5.8 SQ MI

  PEAK FLOW      TIME                          MAXIMUM AVERAGE FLOW
                                     6-HR        24-HR        72-HR      66.63-HR
+   (CFS)        (HR)
                                   (CFS)
+     283.      12.20                22.           6.           2.           2.
                             (INCHES)      .129         .129         .129         .129
                              (AC-FT)       11.          11.          11.          11.

                          CUMULATIVE AREA =     1.59 SQ MI

      ***              ***              ***              ***              ***

                         HYDROGRAPH AT STATION   TOLSCH
                       TRANSPOSITION AREA       5.8 SQ MI

  PEAK FLOW      TIME                          MAXIMUM AVERAGE FLOW
                                     6-HR        24-HR        72-HR      66.63-HR
+   (CFS)        (HR)
                                   (CFS)
+     399.      12.20               128.          46.          17.          17.
                             (INCHES)      .748        1.068        1.119        1.119
                              (AC-FT)       63.          90.          95.          95.

                          CUMULATIVE AREA =     1.59 SQ MI

      ***              ***              ***              ***              ***

                         DIVERSION HYDROGRAPH      MCDB
                       TRANSPOSITION AREA      10.7 SQ MI

  PEAK FLOW      TIME                          MAXIMUM AVERAGE FLOW
                                     6-HR        24-HR        72-HR      66.63-HR
+   (CFS)        (HR)
                                   (CFS)
+     263.      12.20                20.           5.           2.           2.
                             (INCHES)      .116         .116         .116         .116
                              (AC-FT)       10.          10.          10.          10.

                          CUMULATIVE AREA =     1.59 SQ MI

      ***              ***              ***              ***              ***

                         HYDROGRAPH AT STATION   TOLSCH
                       TRANSPOSITION AREA      10.7 SQ MI

  PEAK FLOW      TIME                          MAXIMUM AVERAGE FLOW
                                     6-HR        24-HR        72-HR      66.63-HR
+   (CFS)        (HR)
                                   (CFS)
+     396.      12.20               124.          44.          17.          17.
                             (INCHES)      .727        1.033        1.080        1.080
                              (AC-FT)       61.          87.          91.          91.

                          CUMULATIVE AREA =     1.59 SQ MI

      ***              ***              ***              ***              ***

                         DIVERSION HYDROGRAPH      MCDB
                       TRANSPOSITION AREA      13.7 SQ MI

  PEAK FLOW      TIME                          MAXIMUM AVERAGE FLOW
                                     6-HR        24-HR        72-HR      66.63-HR
+   (CFS)        (HR)
                                   (CFS)
+     251.      12.20                19.           5.           2.           2.
                             (INCHES)      .113         .113         .113         .113
                              (AC-FT)       10.          10.          10.          10.

                          CUMULATIVE AREA =     1.59 SQ MI

      ***              ***              ***              ***              ***

                         HYDROGRAPH AT STATION   TOLSCH
                       TRANSPOSITION AREA      13.7 SQ MI
```

```
  PEAK FLOW     TIME                          MAXIMUM AVERAGE FLOW
                                     6-HR        24-HR        72-HR      66.63-HR
+   (CFS)       (HR)
                          (CFS)
+     394.     12.20                 122.          43.          16.          16.
                         (INCHES)   .718        1.019        1.065        1.065
                          (AC-FT)    61.          86.          90.          90.

                         CUMULATIVE AREA =    1.59 SQ MI


      ***             ***             ***             ***             ***

                          DIVERSION HYDROGRAPH     MCDB
                        TRANSPOSITION AREA     20.0 SQ MI

  PEAK FLOW     TIME                          MAXIMUM AVERAGE FLOW
                                     6-HR        24-HR        72-HR      66.63-HR
+   (CFS)       (HR)
                          (CFS)
+     230.     12.23                  18.           4.           2.           2.
                         (INCHES)   .104         .104         .104         .104
                          (AC-FT)     9.           9.           9.           9.

                         CUMULATIVE AREA =    1.59 SQ MI


      ***             ***             ***             ***             ***

                          HYDROGRAPH AT STATION   TOLSCH
                        TRANSPOSITION AREA     20.0 SQ MI

  PEAK FLOW     TIME                          MAXIMUM AVERAGE FLOW
                                     6-HR        24-HR        72-HR      66.63-HR
+   (CFS)       (HR)
                          (CFS)
+     391.     12.23                 120.          42.          16.          16.
                         (INCHES)   .703         .995        1.038        1.038
                          (AC-FT)    59.          84.          88.          88.

                         CUMULATIVE AREA =    1.59 SQ MI


      ***             ***             ***             ***             ***

                          DIVERSION HYDROGRAPH     MCDB
                        TRANSPOSITION AREA     50.0 SQ MI

  PEAK FLOW     TIME                          MAXIMUM AVERAGE FLOW
                                     6-HR        24-HR        72-HR      66.63-HR
+   (CFS)       (HR)
                          (CFS)
+     195.     12.17                  15.           4.           1.           1.
                         (INCHES)   .087         .087         .087         .087
                          (AC-FT)     7.           7.           7.           7.

                         CUMULATIVE AREA =    1.59 SQ MI


      ***             ***             ***             ***             ***

                          HYDROGRAPH AT STATION   TOLSCH
                        TRANSPOSITION AREA     50.0 SQ MI

  PEAK FLOW     TIME                          MAXIMUM AVERAGE FLOW
                                     6-HR        24-HR        72-HR      66.63-HR
+   (CFS)       (HR)
                          (CFS)
+     385.     12.17                 114.          40.          15.          15.
                         (INCHES)   .669         .941         .978         .978
                          (AC-FT)    57.          80.          83.          83.

                         CUMULATIVE AREA =    1.59 SQ MI

      ***             ***             ***             ***             ***


                    INTERPOLATED DIVERSION HYDROGRAPH AT     MCDB

  PEAK FLOW     TIME                          MAXIMUM AVERAGE FLOW
                                     6-HR        24-HR        72-HR      66.63-HR
+   (CFS)       (HR)
```

```
                          (CFS)
+     302.     12.17                  24.          6.          2.          2.
                        (INCHES)     .139        .139        .139        .139
                         (AC-FT)     12.         12.         12.         12.

                        CUMULATIVE AREA =    1.59 SQ MI

      ***             ***             ***             ***             ***


                        INTERPOLATED HYDROGRAPH AT   TOLSCH

  PEAK FLOW     TIME                          MAXIMUM AVERAGE FLOW
                                     6-HR       24-HR       72-HR     66.63-HR
+   (CFS)       (HR)
                          (CFS)
+     402.     12.17                 131.         47.         18.         18.
                        (INCHES)     .766       1.097       1.152       1.152
                         (AC-FT)     65.         93.         97.         97.

                        CUMULATIVE AREA =    1.59 SQ MI

         WARNING EXCESS AT PONDING LESS THAN ZERO FOR PERIOD. EXCESS SET TO ZERO


*** *** *** *** *** *** *** *** *** *** *** *** *** *** *** *** *** *** *** *** *** *** *** *** *** *** *** *** *** *** *** *** ***


            **************
            *            *
 2029 KK    *     RMCDB  *
            *            *
            **************

 2030 KO          OUTPUT CONTROL VARIABLES
                        IPRNT           3  PRINT CONTROL
                        IPLOT           0  PLOT CONTROL
                        QSCAL          0.  HYDROGRAPH PLOT SCALE
                            Retrieve flow that remained in the storm drain and goes to the McDowell Road
                            detention basin

 2033 DR          RETRIEVE DIVERSION HYDROGRAPH
                        ISTAD        MCDB  DIVERSION HYDROGRAPH IDENTIFICATION

                                                                  ***

      ***             ***             ***             ***             ***

                          HYDROGRAPH AT STATION    RMCDB
                        TRANSPOSITION AREA       .0 SQ MI

  PEAK FLOW     TIME                          MAXIMUM AVERAGE FLOW
                                     6-HR       24-HR       72-HR     66.63-HR
+   (CFS)       (HR)
                          (CFS)
+     317.     12.17                  25.          6.          2.          2.
                        (INCHES)     .078        .078        .078        .078
                         (AC-FT)     12.         12.         12.         12.

                        CUMULATIVE AREA =    1.59 SQ MI


      ***             ***             ***             ***             ***

                          HYDROGRAPH AT STATION    RMCDB
                        TRANSPOSITION AREA      1.0 SQ MI

  PEAK FLOW     TIME                          MAXIMUM AVERAGE FLOW
                                     6-HR       24-HR       72-HR     66.63-HR
+   (CFS)       (HR)
                          (CFS)
+     313.     12.17                  24.          6.          2.          2.
                        (INCHES)     .076        .076        .076        .076
                         (AC-FT)     12.         12.         12.         12.

                        CUMULATIVE AREA =    1.59 SQ MI


      ***             ***             ***             ***             ***

                          HYDROGRAPH AT STATION    RMCDB
                        TRANSPOSITION AREA      5.8 SQ MI
```

```
  PEAK FLOW     TIME                          MAXIMUM AVERAGE FLOW
                                     6-HR        24-HR        72-HR      66.63-HR
+   (CFS)       (HR)
                              (CFS)
+     283.     12.20                22.          6.           2.           2.
                          (INCHES)  .069        .069         .069         .069
                           (AC-FT)  11.          11.          11.          11.

                          CUMULATIVE AREA =    1.59 SQ MI


      ***             ***            ***            ***            ***

                          HYDROGRAPH AT STATION    RMCDB
                         TRANSPOSITION AREA     10.7 SQ MI

  PEAK FLOW     TIME                          MAXIMUM AVERAGE FLOW
                                     6-HR        24-HR        72-HR      66.63-HR
+   (CFS)       (HR)
                              (CFS)
+     263.     12.20                20.          5.           2.           2.
                          (INCHES)  .062        .062         .062         .062
                           (AC-FT)  10.          10.          10.          10.

                          CUMULATIVE AREA =    1.59 SQ MI


      ***             ***            ***            ***            ***

                          HYDROGRAPH AT STATION    RMCDB
                         TRANSPOSITION AREA     13.7 SQ MI

  PEAK FLOW     TIME                          MAXIMUM AVERAGE FLOW
                                     6-HR        24-HR        72-HR      66.63-HR
+   (CFS)       (HR)
                              (CFS)
+     251.     12.20                19.          5.           2.           2.
                          (INCHES)  .060        .060         .060         .060
                           (AC-FT)  10.          10.          10.          10.

                          CUMULATIVE AREA =    1.59 SQ MI


      ***             ***            ***            ***            ***

                          HYDROGRAPH AT STATION    RMCDB
                         TRANSPOSITION AREA     20.0 SQ MI

  PEAK FLOW     TIME                          MAXIMUM AVERAGE FLOW
                                     6-HR        24-HR        72-HR      66.63-HR
+   (CFS)       (HR)
                              (CFS)
+     230.     12.23                18.          4.           2.           2.
                          (INCHES)  .055        .055         .055         .055
                           (AC-FT)   9.           9.           9.           9.

                          CUMULATIVE AREA =    1.59 SQ MI


      ***             ***            ***            ***            ***

                          HYDROGRAPH AT STATION    RMCDB
                         TRANSPOSITION AREA     50.0 SQ MI

  PEAK FLOW     TIME                          MAXIMUM AVERAGE FLOW
                                     6-HR        24-HR        72-HR      66.63-HR
+   (CFS)       (HR)
                              (CFS)
+     195.     12.17                15.          4.           1.           1.
                          (INCHES)  .047        .047         .047         .047
                           (AC-FT)   7.           7.           7.           7.

                          CUMULATIVE AREA =    1.59 SQ MI

      ***             ***            ***            ***            ***


                          INTERPOLATED HYDROGRAPH AT    RMCDB

  PEAK FLOW     TIME                          MAXIMUM AVERAGE FLOW
                                     6-HR        24-HR        72-HR      66.63-HR
+   (CFS)       (HR)
```

```
                        (CFS)
+     302.     12.17                  24.          6.          2.          2.
                      (INCHES)       .139        .139        .139        .139
                       (AC-FT)        12.         12.         12.         12.

                      CUMULATIVE AREA =    1.59 SQ MI


*** *** *** *** *** *** *** *** *** *** *** *** *** *** *** *** *** *** *** *** *** *** *** *** *** *** *** *** *** *** *** ***


            **************
            *            *
2034 KK     *     SMCDB  *
            *            *
            **************

2037 KO          OUTPUT CONTROL VARIABLES
                       IPRNT           1  PRINT CONTROL
                       IPLOT           0  PLOT CONTROL
                       QSCAL          0.  HYDROGRAPH PLOT SCALE

              HYDROGRAPH ROUTING DATA

2038 RS          STORAGE ROUTING
                       NSTPS           1  NUMBER OF SUBREACHES
                        ITYP        STOR  TYPE OF INITIAL CONDITION
                      RSVRIC         .00  INITIAL CONDITION
                           X         .00 WORKING R AND D COEFFICIENT

2039 SV            STORAGE          .0        .2        .5        .9       1.5       2.1       2.9       3.8       4.9
                                   7.5       9.1

2041 SQ          DISCHARGE          0.        0.        0.        0.        0.        0.        0.        0.        0.
                                   25.      225.

2043 SE          ELEVATION     1630.00   1631.00   1632.00   1633.00   1634.00   1635.00   1636.00   1637.00   1638.00
                               1640.00   1641.00

                                                                  ***
*****************************************************************************************************************************

                                          HYDROGRAPH AT     SMCDB
                                     TRANSPOSITION AREA       .0 SQ MI

*****************************************************************************************************************************
                                                 *                                                 *
 DA MON HRMN ORD  OUTFLOW  STORAGE   STAGE *  DA MON HRMN ORD  OUTFLOW  STORAGE   STAGE *  DA MON HRMN ORD  OUTFLOW  STOR
                                                 *                                                 *
  1     0000   1       0.       .0  1630.0 *   1     2214 668       0.       6.1  1639.0 *   2     20281335       0.
  1     0002   2       0.       .0  1630.0 *   1     2216 669       0.       6.1  1639.0 *   2     20301336       0.
  1     0004   3       0.       .0  1630.0 *   1     2218 670       0.       6.1  1639.0 *   2     20321337       0.
  1     0006   4       0.       .0  1630.0 *   1     2220 671       0.       6.1  1639.0 *   2     20341338       0.
  1     0008   5       0.       .0  1630.0 *   1     2222 672       0.       6.1  1639.0 *   2     20361339       0.
  1     0010   6       0.       .0  1630.0 *   1     2224 673       0.       6.1  1639.0 *   2     20381340       0.
  1     0012   7       0.       .0  1630.0 *   1     2226 674       0.       6.1  1639.0 *   2     20401341       0.
  1     0014   8       0.       .0  1630.0 *   1     2228 675       0.       6.1  1639.0 *   2     20421342       0.
  1     0016   9       0.       .0  1630.0 *   1     2230 676       0.       6.1  1639.0 *   2     20441343       0.
  1     0018  10       0.       .0  1630.0 *   1     2232 677       0.       6.1  1639.0 *   2     20461344       0.
  1     0020  11       0.       .0  1630.0 *   1     2234 678       0.       6.1  1639.0 *   2     20481345       0.
  1     0022  12       0.       .0  1630.0 *   1     2236 679       0.       6.1  1639.0 *   2     20501346       0.
  1     0024  13       0.       .0  1630.0 *   1     2238 680       0.       6.1  1639.0 *   2     20521347       0.
  1     0026  14       0.       .0  1630.0 *   1     2240 681       0.       6.1  1639.0 *   2     20541348       0.
  1     0028  15       0.       .0  1630.0 *   1     2242 682       0.       6.1  1639.0 *   2     20561349       0.
  1     0030  16       0.       .0  1630.0 *   1     2244 683       0.       6.1  1639.0 *   2     20581350       0.
  1     0032  17       0.       .0  1630.0 *   1     2246 684       0.       6.1  1639.0 *   2     21001351       0.
  1     0034  18       0.       .0  1630.0 *   1     2248 685       0.       6.1  1639.0 *   2     21021352       0.
  1     0036  19       0.       .0  1630.0 *   1     2250 686       0.       6.1  1639.0 *   2     21041353       0.
  1     0038  20       0.       .0  1630.0 *   1     2252 687       0.       6.1  1639.0 *   2     21061354       0.
  1     0040  21       0.       .0  1630.0 *   1     2254 688       0.       6.1  1639.0 *   2     21081355       0.
  1     0042  22       0.       .0  1630.0 *   1     2256 689       0.       6.1  1639.0 *   2     21101356       0.
  1     0044  23       0.       .0  1630.0 *   1     2258 690       0.       6.1  1639.0 *   2     21121357       0.
  1     0046  24       0.       .0  1630.0 *   1     2300 691       0.       6.1  1639.0 *   2     21141358       0.
  1     0048  25       0.       .0  1630.0 *   1     2302 692       0.       6.1  1639.0 *   2     21161359       0.
  1     0050  26       0.       .0  1630.0 *   1     2304 693       0.       6.1  1639.0 *   2     21181360       0.
  1     0052  27       0.       .0  1630.0 *   1     2306 694       0.       6.1  1639.0 *   2     21201361       0.
  1     0054  28       0.       .0  1630.0 *   1     2308 695       0.       6.1  1639.0 *   2     21221362       0.
  1     0056  29       0.       .0  1630.0 *   1     2310 696       0.       6.1  1639.0 *   2     21241363       0.
  1     0058  30       0.       .0  1630.0 *   1     2312 697       0.       6.1  1639.0 *   2     21261364       0.
  1     0100  31       0.       .0  1630.0 *   1     2314 698       0.       6.1  1639.0 *   2     21281365       0.
  1     0102  32       0.       .0  1630.0 *   1     2316 699       0.       6.1  1639.0 *   2     21301366       0.
```

1	0104	33	0.	.0	1630.0	*	1	2318	700	0.	6.1	1639.0	*	2	21321367	0.
1	0106	34	0.	.0	1630.0	*	1	2320	701	0.	6.1	1639.0	*	2	21341368	0.
1	0108	35	0.	.0	1630.0	*	1	2322	702	0.	6.1	1639.0	*	2	21361369	0.
1	0110	36	0.	.0	1630.0	*	1	2324	703	0.	6.1	1639.0	*	2	21381370	0.
1	0112	37	0.	.0	1630.0	*	1	2326	704	0.	6.1	1639.0	*	2	21401371	0.
1	0114	38	0.	.0	1630.0	*	1	2328	705	0.	6.1	1639.0	*	2	21421372	0.
1	0116	39	0.	.0	1630.0	*	1	2330	706	0.	6.1	1639.0	*	2	21441373	0.
1	0118	40	0.	.0	1630.0	*	1	2332	707	0.	6.1	1639.0	*	2	21461374	0.
1	0120	41	0.	.0	1630.0	*	1	2334	708	0.	6.1	1639.0	*	2	21481375	0.
1	0122	42	0.	.0	1630.0	*	1	2336	709	0.	6.1	1639.0	*	2	21501376	0.
1	0124	43	0.	.0	1630.0	*	1	2338	710	0.	6.1	1639.0	*	2	21521377	0.
1	0126	44	0.	.0	1630.0	*	1	2340	711	0.	6.1	1639.0	*	2	21541378	0.
1	0128	45	0.	.0	1630.0	*	1	2342	712	0.	6.1	1639.0	*	2	21561379	0.
1	0130	46	0.	.0	1630.0	*	1	2344	713	0.	6.1	1639.0	*	2	21581380	0.
1	0132	47	0.	.0	1630.0	*	1	2346	714	0.	6.1	1639.0	*	2	22001381	0.
1	0134	48	0.	.0	1630.0	*	1	2348	715	0.	6.1	1639.0	*	2	22021382	0.
1	0136	49	0.	.0	1630.0	*	1	2350	716	0.	6.1	1639.0	*	2	22041383	0.
1	0138	50	0.	.0	1630.0	*	1	2352	717	0.	6.1	1639.0	*	2	22061384	0.
1	0140	51	0.	.0	1630.0	*	1	2354	718	0.	6.1	1639.0	*	2	22081385	0.
1	0142	52	0.	.0	1630.0	*	1	2356	719	0.	6.1	1639.0	*	2	22101386	0.
1	0144	53	0.	.0	1630.0	*	1	2358	720	0.	6.1	1639.0	*	2	22121387	0.
1	0146	54	0.	.0	1630.0	*	2	0000	721	0.	6.1	1639.0	*	2	22141388	0.
1	0148	55	0.	.0	1630.0	*	2	0002	722	0.	6.1	1639.0	*	2	22161389	0.
1	0150	56	0.	.0	1630.0	*	2	0004	723	0.	6.1	1639.0	*	2	22181390	0.
1	0152	57	0.	.0	1630.0	*	2	0006	724	0.	6.1	1639.0	*	2	22201391	0.
1	0154	58	0.	.0	1630.0	*	2	0008	725	0.	6.1	1639.0	*	2	22221392	0.
1	0156	59	0.	.0	1630.0	*	2	0010	726	0.	6.1	1639.0	*	2	22241393	0.
1	0158	60	0.	.0	1630.0	*	2	0012	727	0.	6.1	1639.0	*	2	22261394	0.
1	0200	61	0.	.0	1630.0	*	2	0014	728	0.	6.1	1639.0	*	2	22281395	0.
1	0202	62	0.	.0	1630.0	*	2	0016	729	0.	6.1	1639.0	*	2	22301396	0.
1	0204	63	0.	.0	1630.0	*	2	0018	730	0.	6.1	1639.0	*	2	22321397	0.
1	0206	64	0.	.0	1630.0	*	2	0020	731	0.	6.1	1639.0	*	2	22341398	0.
1	0208	65	0.	.0	1630.0	*	2	0022	732	0.	6.1	1639.0	*	2	22361399	0.
1	0210	66	0.	.0	1630.0	*	2	0024	733	0.	6.1	1639.0	*	2	22381400	0.
1	0212	67	0.	.0	1630.0	*	2	0026	734	0.	6.1	1639.0	*	2	22401401	0.
1	0214	68	0.	.0	1630.0	*	2	0028	735	0.	6.1	1639.0	*	2	22421402	0.
1	0216	69	0.	.0	1630.0	*	2	0030	736	0.	6.1	1639.0	*	2	22441403	0.
1	0218	70	0.	.0	1630.0	*	2	0032	737	0.	6.1	1639.0	*	2	22461404	0.
1	0220	71	0.	.0	1630.0	*	2	0034	738	0.	6.1	1639.0	*	2	22481405	0.
1	0222	72	0.	.0	1630.0	*	2	0036	739	0.	6.1	1639.0	*	2	22501406	0.
1	0224	73	0.	.0	1630.0	*	2	0038	740	0.	6.1	1639.0	*	2	22521407	0.
1	0226	74	0.	.0	1630.0	*	2	0040	741	0.	6.1	1639.0	*	2	22541408	0.
1	0228	75	0.	.0	1630.0	*	2	0042	742	0.	6.1	1639.0	*	2	22561409	0.
1	0230	76	0.	.0	1630.0	*	2	0044	743	0.	6.1	1639.0	*	2	22581410	0.
1	0232	77	0.	.0	1630.0	*	2	0046	744	0.	6.1	1639.0	*	2	23001411	0.
1	0234	78	0.	.0	1630.0	*	2	0048	745	0.	6.1	1639.0	*	2	23021412	0.
1	0236	79	0.	.0	1630.0	*	2	0050	746	0.	6.1	1639.0	*	2	23041413	0.
1	0238	80	0.	.0	1630.0	*	2	0052	747	0.	6.1	1639.0	*	2	23061414	0.
1	0240	81	0.	.0	1630.0	*	2	0054	748	0.	6.1	1639.0	*	2	23081415	0.
1	0242	82	0.	.0	1630.0	*	2	0056	749	0.	6.1	1639.0	*	2	23101416	0.
1	0244	83	0.	.0	1630.0	*	2	0058	750	0.	6.1	1639.0	*	2	23121417	0.
1	0246	84	0.	.0	1630.0	*	2	0100	751	0.	6.1	1639.0	*	2	23141418	0.
1	0248	85	0.	.0	1630.0	*	2	0102	752	0.	6.1	1639.0	*	2	23161419	0.
1	0250	86	0.	.0	1630.0	*	2	0104	753	0.	6.1	1639.0	*	2	23181420	0.
1	0252	87	0.	.0	1630.0	*	2	0106	754	0.	6.1	1639.0	*	2	23201421	0.
1	0254	88	0.	.0	1630.0	*	2	0108	755	0.	6.1	1639.0	*	2	23221422	0.
1	0256	89	0.	.0	1630.0	*	2	0110	756	0.	6.1	1639.0	*	2	23241423	0.
1	0258	90	0.	.0	1630.0	*	2	0112	757	0.	6.1	1639.0	*	2	23261424	0.
1	0300	91	0.	.0	1630.0	*	2	0114	758	0.	6.1	1639.0	*	2	23281425	0.
1	0302	92	0.	.0	1630.0	*	2	0116	759	0.	6.1	1639.0	*	2	23301426	0.
1	0304	93	0.	.0	1630.0	*	2	0118	760	0.	6.1	1639.0	*	2	23321427	0.
1	0306	94	0.	.0	1630.0	*	2	0120	761	0.	6.1	1639.0	*	2	23341428	0.
1	0308	95	0.	.0	1630.0	*	2	0122	762	0.	6.1	1639.0	*	2	23361429	0.
1	0310	96	0.	.0	1630.0	*	2	0124	763	0.	6.1	1639.0	*	2	23381430	0.
1	0312	97	0.	.0	1630.0	*	2	0126	764	0.	6.1	1639.0	*	2	23401431	0.
1	0314	98	0.	.0	1630.0	*	2	0128	765	0.	6.1	1639.0	*	2	23421432	0.
1	0316	99	0.	.0	1630.0	*	2	0130	766	0.	6.1	1639.0	*	2	23441433	0.
1	0318	100	0.	.0	1630.0	*	2	0132	767	0.	6.1	1639.0	*	2	23461434	0.
1	0320	101	0.	.0	1630.0	*	2	0134	768	0.	6.1	1639.0	*	2	23481435	0.
1	0322	102	0.	.0	1630.0	*	2	0136	769	0.	6.1	1639.0	*	2	23501436	0.
1	0324	103	0.	.0	1630.0	*	2	0138	770	0.	6.1	1639.0	*	2	23521437	0.
1	0326	104	0.	.0	1630.0	*	2	0140	771	0.	6.1	1639.0	*	2	23541438	0.
1	0328	105	0.	.0	1630.0	*	2	0142	772	0.	6.1	1639.0	*	2	23561439	0.
1	0330	106	0.	.0	1630.0	*	2	0144	773	0.	6.1	1639.0	*	2	23581440	0.
1	0332	107	0.	.0	1630.0	*	2	0146	774	0.	6.1	1639.0	*	3	00001441	0.
1	0334	108	0.	.0	1630.0	*	2	0148	775	0.	6.1	1639.0	*	3	00021442	0.
1	0336	109	0.	.0	1630.0	*	2	0150	776	0.	6.1	1639.0	*	3	00041443	0.
1	0338	110	0.	.0	1630.0	*	2	0152	777	0.	6.1	1639.0	*	3	00061444	0.
1	0340	111	0.	.0	1630.0	*	2	0154	778	0.	6.1	1639.0	*	3	00081445	0.
1	0342	112	0.	.0	1630.0	*	2	0156	779	0.	6.1	1639.0	*	3	00101446	0.
1	0344	113	0.	.0	1630.0	*	2	0158	780	0.	6.1	1639.0	*	3	00121447	0.
1	0346	114	0.	.0	1630.0	*	2	0200	781	0.	6.1	1639.0	*	3	00141448	0.
1	0348	115	0.	.0	1630.0	*	2	0202	782	0.	6.1	1639.0	*	3	00161449	0.
1	0350	116	0.	.0	1630.0	*	2	0204	783	0.	6.1	1639.0	*	3	00181450	0.

1	0352	117	0.	.0	1630.0	*	2	0206	784	0.	6.1	1639.0	*	3	00201451	0.
1	0354	118	0.	.0	1630.0	*	2	0208	785	0.	6.1	1639.0	*	3	00221452	0.
1	0356	119	0.	.0	1630.0	*	2	0210	786	0.	6.1	1639.0	*	3	00241453	0.
1	0358	120	0.	.0	1630.0	*	2	0212	787	0.	6.1	1639.0	*	3	00261454	0.
	0400	121	0.	.0	1630.0	*	2	0214	788	0.	6.1	1639.0	*	3	00281455	0.
	0402	122	0.	.0	1630.0	*	2	0216	789	0.	6.1	1639.0	*	3	00301456	0.
1	0404	123	0.	.0	1630.0	*	2	0218	790	0.	6.1	1639.0	*	3	00321457	0.
1	0406	124	0.	.0	1630.0	*	2	0220	791	0.	6.1	1639.0	*	3	00341458	0.
1	0408	125	0.	.0	1630.0	*	2	0222	792	0.	6.1	1639.0	*	3	00361459	0.
1	0410	126	0.	.0	1630.0	*	2	0224	793	0.	6.1	1639.0	*	3	00381460	0.
1	0412	127	0.	.0	1630.0	*	2	0226	794	0.	6.1	1639.0	*	3	00401461	0.
1	0414	128	0.	.0	1630.0	*	2	0228	795	0.	6.1	1639.0	*	3	00421462	0.
1	0416	129	0.	.0	1630.0	*	2	0230	796	0.	6.1	1639.0	*	3	00441463	0.
1	0418	130	0.	.0	1630.0	*	2	0232	797	0.	6.1	1639.0	*	3	00461464	0.
1	0420	131	0.	.0	1630.0	*	2	0234	798	0.	6.1	1639.0	*	3	00481465	0.
1	0422	132	0.	.0	1630.0	*	2	0236	799	0.	6.1	1639.0	*	3	00501466	0.
1	0424	133	0.	.0	1630.0	*	2	0238	800	0.	6.1	1639.0	*	3	00521467	0.
1	0426	134	0.	.0	1630.0	*	2	0240	801	0.	6.1	1639.0	*	3	00541468	0.
1	0428	135	0.	.0	1630.0	*	2	0242	802	0.	6.1	1639.0	*	3	00561469	0.
1	0430	136	0.	.0	1630.0	*	2	0244	803	0.	6.1	1639.0	*	3	00581470	0.
1	0432	137	0.	.0	1630.0	*	2	0246	804	0.	6.1	1639.0	*	3	01001471	0.
1	0434	138	0.	.0	1630.0	*	2	0248	805	0.	6.1	1639.0	*	3	01021472	0.
1	0436	139	0.	.0	1630.0	*	2	0250	806	0.	6.1	1639.0	*	3	01041473	0.
1	0438	140	0.	.0	1630.0	*	2	0252	807	0.	6.1	1639.0	*	3	01061474	0.
1	0440	141	0.	.0	1630.0	*	2	0254	808	0.	6.1	1639.0	*	3	01081475	0.
1	0442	142	0.	.0	1630.0	*	2	0256	809	0.	6.1	1639.0	*	3	01101476	0.
1	0444	143	0.	.0	1630.0	*	2	0258	810	0.	6.1	1639.0	*	3	01121477	0.
1	0446	144	0.	.0	1630.0	*	2	0300	811	0.	6.1	1639.0	*	3	01141478	0.
1	0448	145	0.	.0	1630.0	*	2	0302	812	0.	6.1	1639.0	*	3	01161479	0.
1	0450	146	0.	.0	1630.0	*	2	0304	813	0.	6.1	1639.0	*	3	01181480	0.
1	0452	147	0.	.0	1630.0	*	2	0306	814	0.	6.1	1639.0	*	3	01201481	0.
1	0454	148	0.	.0	1630.0	*	2	0308	815	0.	6.1	1639.0	*	3	01221482	0.
1	0456	149	0.	.0	1630.0	*	2	0310	816	0.	6.1	1639.0	*	3	01241483	0.
1	0458	150	0.	.0	1630.0	*	2	0312	817	0.	6.1	1639.0	*	3	01261484	0.
1	0500	151	0.	.0	1630.0	*	2	0314	818	0.	6.1	1639.0	*	3	01281485	0.
1	0502	152	0.	.0	1630.0	*	2	0316	819	0.	6.1	1639.0	*	3	01301486	0.
1	0504	153	0.	.0	1630.0	*	2	0318	820	0.	6.1	1639.0	*	3	01321487	0.
1	0506	154	0.	.0	1630.0	*	2	0320	821	0.	6.1	1639.0	*	3	01341488	0.
1	0508	155	0.	.0	1630.0	*	2	0322	822	0.	6.1	1639.0	*	3	01361489	0.
1	0510	156	0.	.0	1630.0	*	2	0324	823	0.	6.1	1639.0	*	3	01381490	0.
	0512	157	0.	.0	1630.0	*	2	0326	824	0.	6.1	1639.0	*	3	01401491	0.
	0514	158	0.	.0	1630.0	*	2	0328	825	0.	6.1	1639.0	*	3	01421492	0.
1	0516	159	0.	.0	1630.0	*	2	0330	826	0.	6.1	1639.0	*	3	01441493	0.
1	0518	160	0.	.0	1630.0	*	2	0332	827	0.	6.1	1639.0	*	3	01461494	0.
1	0520	161	0.	.0	1630.0	*	2	0334	828	0.	6.1	1639.0	*	3	01481495	0.
1	0522	162	0.	.0	1630.0	*	2	0336	829	0.	6.1	1639.0	*	3	01501496	0.
1	0524	163	0.	.0	1630.0	*	2	0338	830	0.	6.1	1639.0	*	3	01521497	0.
1	0526	164	0.	.0	1630.0	*	2	0340	831	0.	6.1	1639.0	*	3	01541498	0.
1	0528	165	0.	.0	1630.0	*	2	0342	832	0.	6.1	1639.0	*	3	01561499	0.
1	0530	166	0.	.0	1630.0	*	2	0344	833	0.	6.1	1639.0	*	3	01581500	0.
1	0532	167	0.	.0	1630.0	*	2	0346	834	0.	6.1	1639.0	*	3	02001501	0.
1	0534	168	0.	.0	1630.0	*	2	0348	835	0.	6.1	1639.0	*	3	02021502	0.
1	0536	169	0.	.0	1630.0	*	2	0350	836	0.	6.1	1639.0	*	3	02041503	0.
1	0538	170	0.	.0	1630.0	*	2	0352	837	0.	6.1	1639.0	*	3	02061504	0.
1	0540	171	0.	.0	1630.0	*	2	0354	838	0.	6.1	1639.0	*	3	02081505	0.
1	0542	172	0.	.0	1630.0	*	2	0356	839	0.	6.1	1639.0	*	3	02101506	0.
1	0544	173	0.	.0	1630.0	*	2	0358	840	0.	6.1	1639.0	*	3	02121507	0.
1	0546	174	0.	.0	1630.0	*	2	0400	841	0.	6.1	1639.0	*	3	02141508	0.
1	0548	175	0.	.0	1630.0	*	2	0402	842	0.	6.1	1639.0	*	3	02161509	0.
1	0550	176	0.	.0	1630.0	*	2	0404	843	0.	6.1	1639.0	*	3	02181510	0.
1	0552	177	0.	.0	1630.0	*	2	0406	844	0.	6.1	1639.0	*	3	02201511	0.
1	0554	178	0.	.0	1630.0	*	2	0408	845	0.	6.1	1639.0	*	3	02221512	0.
1	0556	179	0.	.0	1630.0	*	2	0410	846	0.	6.1	1639.0	*	3	02241513	0.
1	0558	180	0.	.0	1630.0	*	2	0412	847	0.	6.1	1639.0	*	3	02261514	0.
1	0600	181	0.	.0	1630.0	*	2	0414	848	0.	6.1	1639.0	*	3	02281515	0.
1	0602	182	0.	.0	1630.0	*	2	0416	849	0.	6.1	1639.0	*	3	02301516	0.
1	0604	183	0.	.0	1630.0	*	2	0418	850	0.	6.1	1639.0	*	3	02321517	0.
1	0606	184	0.	.0	1630.0	*	2	0420	851	0.	6.1	1639.0	*	3	02341518	0.
1	0608	185	0.	.0	1630.0	*	2	0422	852	0.	6.1	1639.0	*	3	02361519	0.
1	0610	186	0.	.0	1630.0	*	2	0424	853	0.	6.1	1639.0	*	3	02381520	0.
1	0612	187	0.	.0	1630.0	*	2	0426	854	0.	6.1	1639.0	*	3	02401521	0.
1	0614	188	0.	.0	1630.0	*	2	0428	855	0.	6.1	1639.0	*	3	02421522	0.
1	0616	189	0.	.0	1630.0	*	2	0430	856	0.	6.1	1639.0	*	3	02441523	0.
1	0618	190	0.	.0	1630.0	*	2	0432	857	0.	6.1	1639.0	*	3	02461524	0.
1	0620	191	0.	.0	1630.0	*	2	0434	858	0.	6.1	1639.0	*	3	02481525	0.
	0622	192	0.	.0	1630.0	*	2	0436	859	0.	6.1	1639.0	*	3	02501526	0.
	0624	193	0.	.0	1630.0	*	2	0438	860	0.	6.1	1639.0	*	3	02521527	0.
	0626	194	0.	.0	1630.0	*	2	0440	861	0.	6.1	1639.0	*	3	02541528	0.
1	0628	195	0.	.0	1630.0	*	2	0442	862	0.	6.1	1639.0	*	3	02561529	0.
1	0630	196	0.	.0	1630.0	*	2	0444	863	0.	6.1	1639.0	*	3	02581530	0.
1	0632	197	0.	.0	1630.0	*	2	0446	864	0.	6.1	1639.0	*	3	03001531	0.
1	0634	198	0.	.0	1630.0	*	2	0448	865	0.	6.1	1639.0	*	3	03021532	0.
1	0636	199	0.	.0	1630.0	*	2	0450	866	0.	6.1	1639.0	*	3	03041533	0.
1	0638	200	0.	.0	1630.0	*	2	0452	867	0.	6.1	1639.0	*	3	03061534	0.

1	0640	201	0.	.0	1630.0	*	2	0454	868	0.	6.1	1639.0	*	3	03081535	0.
1	0642	202	0.	.0	1630.0	*	2	0456	869	0.	6.1	1639.0	*	3	03101536	0.
1	0644	203	0.	.0	1630.0	*	2	0458	870	0.	6.1	1639.0	*	3	03121537	0.
1	0646	204	0.	.0	1630.0	*	2	0500	871	0.	6.1	1639.0	*	3	03141538	0.
1	0648	205	0.	.0	1630.0	*	2	0502	872	0.	6.1	1639.0	*	3	03161539	0.
1	0650	206	0.	.0	1630.0	*	2	0504	873	0.	6.1	1639.0	*	3	03181540	0.
1	0652	207	0.	.0	1630.0	*	2	0506	874	0.	6.1	1639.0	*	3	03201541	0.
1	0654	208	0.	.0	1630.0	*	2	0508	875	0.	6.1	1639.0	*	3	03221542	0.
1	0656	209	0.	.0	1630.0	*	2	0510	876	0.	6.1	1639.0	*	3	03241543	0.
1	0658	210	0.	.0	1630.0	*	2	0512	877	0.	6.1	1639.0	*	3	03261544	0.
1	0700	211	0.	.0	1630.0	*	2	0514	878	0.	6.1	1639.0	*	3	03281545	0.
1	0702	212	0.	.0	1630.0	*	2	0516	879	0.	6.1	1639.0	*	3	03301546	0.
1	0704	213	0.	.0	1630.0	*	2	0518	880	0.	6.1	1639.0	*	3	03321547	0.
1	0706	214	0.	.0	1630.0	*	2	0520	881	0.	6.1	1639.0	*	3	03341548	0.
1	0708	215	0.	.0	1630.0	*	2	0522	882	0.	6.1	1639.0	*	3	03361549	0.
1	0710	216	0.	.0	1630.0	*	2	0524	883	0.	6.1	1639.0	*	3	03381550	0.
1	0712	217	0.	.0	1630.0	*	2	0526	884	0.	6.1	1639.0	*	3	03401551	0.
1	0714	218	0.	.0	1630.0	*	2	0528	885	0.	6.1	1639.0	*	3	03421552	0.
1	0716	219	0.	.0	1630.0	*	2	0530	886	0.	6.1	1639.0	*	3	03441553	0.
1	0718	220	0.	.0	1630.0	*	2	0532	887	0.	6.1	1639.0	*	3	03461554	0.
1	0720	221	0.	.0	1630.0	*	2	0534	888	0.	6.1	1639.0	*	3	03481555	0.
1	0722	222	0.	.0	1630.0	*	2	0536	889	0.	6.1	1639.0	*	3	03501556	0.
1	0724	223	0.	.0	1630.0	*	2	0538	890	0.	6.1	1639.0	*	3	03521557	0.
1	0726	224	0.	.0	1630.0	*	2	0540	891	0.	6.1	1639.0	*	3	03541558	0.
1	0728	225	0.	.0	1630.0	*	2	0542	892	0.	6.1	1639.0	*	3	03561559	0.
1	0730	226	0.	.0	1630.0	*	2	0544	893	0.	6.1	1639.0	*	3	03581560	0.
1	0732	227	0.	.0	1630.0	*	2	0546	894	0.	6.1	1639.0	*	3	04001561	0.
1	0734	228	0.	.0	1630.0	*	2	0548	895	0.	6.1	1639.0	*	3	04021562	0.
1	0736	229	0.	.0	1630.0	*	2	0550	896	0.	6.1	1639.0	*	3	04041563	0.
1	0738	230	0.	.0	1630.0	*	2	0552	897	0.	6.1	1639.0	*	3	04061564	0.
1	0740	231	0.	.0	1630.0	*	2	0554	898	0.	6.1	1639.0	*	3	04081565	0.
1	0742	232	0.	.0	1630.0	*	2	0556	899	0.	6.1	1639.0	*	3	04101566	0.
1	0744	233	0.	.0	1630.0	*	2	0558	900	0.	6.1	1639.0	*	3	04121567	0.
1	0746	234	0.	.0	1630.0	*	2	0600	901	0.	6.1	1639.0	*	3	04141568	0.
1	0748	235	0.	.0	1630.0	*	2	0602	902	0.	6.1	1639.0	*	3	04161569	0.
1	0750	236	0.	.0	1630.0	*	2	0604	903	0.	6.1	1639.0	*	3	04181570	0.
1	0752	237	0.	.0	1630.0	*	2	0606	904	0.	6.1	1639.0	*	3	04201571	0.
1	0754	238	0.	.0	1630.0	*	2	0608	905	0.	6.1	1639.0	*	3	04221572	0.
1	0756	239	0.	.0	1630.0	*	2	0610	906	0.	6.1	1639.0	*	3	04241573	0.
1	0758	240	0.	.0	1630.0	*	2	0612	907	0.	6.1	1639.0	*	3	04261574	0.
1	0800	241	0.	.0	1630.0	*	2	0614	908	0.	6.1	1639.0	*	3	04281575	0.
1	0802	242	0.	.0	1630.0	*	2	0616	909	0.	6.1	1639.0	*	3	04301576	0.
1	0804	243	0.	.0	1630.0	*	2	0618	910	0.	6.1	1639.0	*	3	04321577	0.
1	0806	244	0.	.0	1630.0	*	2	0620	911	0.	6.1	1639.0	*	3	04341578	0.
1	0808	245	0.	.0	1630.0	*	2	0622	912	0.	6.1	1639.0	*	3	04361579	0.
1	0810	246	0.	.0	1630.0	*	2	0624	913	0.	6.1	1639.0	*	3	04381580	0.
1	0812	247	0.	.0	1630.0	*	2	0626	914	0.	6.1	1639.0	*	3	04401581	0.
1	0814	248	0.	.0	1630.0	*	2	0628	915	0.	6.1	1639.0	*	3	04421582	0.
1	0816	249	0.	.0	1630.0	*	2	0630	916	0.	6.1	1639.0	*	3	04441583	0.
1	0818	250	0.	.0	1630.0	*	2	0632	917	0.	6.1	1639.0	*	3	04461584	0.
1	0820	251	0.	.0	1630.0	*	2	0634	918	0.	6.1	1639.0	*	3	04481585	0.
1	0822	252	0.	.0	1630.0	*	2	0636	919	0.	6.1	1639.0	*	3	04501586	0.
1	0824	253	0.	.0	1630.0	*	2	0638	920	0.	6.1	1639.0	*	3	04521587	0.
1	0826	254	0.	.0	1630.0	*	2	0640	921	0.	6.1	1639.0	*	3	04541588	0.
1	0828	255	0.	.0	1630.0	*	2	0642	922	0.	6.1	1639.0	*	3	04561589	0.
1	0830	256	0.	.0	1630.0	*	2	0644	923	0.	6.1	1639.0	*	3	04581590	0.
1	0832	257	0.	.0	1630.0	*	2	0646	924	0.	6.1	1639.0	*	3	05001591	0.
1	0834	258	0.	.0	1630.0	*	2	0648	925	0.	6.1	1639.0	*	3	05021592	0.
1	0836	259	0.	.0	1630.0	*	2	0650	926	0.	6.1	1639.0	*	3	05041593	0.
1	0838	260	0.	.0	1630.0	*	2	0652	927	0.	6.1	1639.0	*	3	05061594	0.
1	0840	261	0.	.0	1630.0	*	2	0654	928	0.	6.1	1639.0	*	3	05081595	0.
1	0842	262	0.	.0	1630.0	*	2	0656	929	0.	6.1	1639.0	*	3	05101596	0.
1	0844	263	0.	.0	1630.0	*	2	0658	930	0.	6.1	1639.0	*	3	05121597	0.
1	0846	264	0.	.0	1630.0	*	2	0700	931	0.	6.1	1639.0	*	3	05141598	0.
1	0848	265	0.	.0	1630.0	*	2	0702	932	0.	6.1	1639.0	*	3	05161599	0.
1	0850	266	0.	.0	1630.0	*	2	0704	933	0.	6.1	1639.0	*	3	05181600	0.
1	0852	267	0.	.0	1630.0	*	2	0706	934	0.	6.1	1639.0	*	3	05201601	0.
1	0854	268	0.	.0	1630.0	*	2	0708	935	0.	6.1	1639.0	*	3	05221602	0.
1	0856	269	0.	.0	1630.0	*	2	0710	936	0.	6.1	1639.0	*	3	05241603	0.
1	0858	270	0.	.0	1630.0	*	2	0712	937	0.	6.1	1639.0	*	3	05261604	0.
1	0900	271	0.	.0	1630.0	*	2	0714	938	0.	6.1	1639.0	*	3	05281605	0.
1	0902	272	0.	.0	1630.0	*	2	0716	939	0.	6.1	1639.0	*	3	05301606	0.
1	0904	273	0.	.0	1630.0	*	2	0718	940	0.	6.1	1639.0	*	3	05321607	0.
1	0906	274	0.	.0	1630.0	*	2	0720	941	0.	6.1	1639.0	*	3	05341608	0.
1	0908	275	0.	.0	1630.0	*	2	0722	942	0.	6.1	1639.0	*	3	05361609	0.
1	0910	276	0.	.0	1630.0	*	2	0724	943	0.	6.1	1639.0	*	3	05381610	0.
1	0912	277	0.	.0	1630.0	*	2	0726	944	0.	6.1	1639.0	*	3	05401611	0.
1	0914	278	0.	.0	1630.0	*	2	0728	945	0.	6.1	1639.0	*	3	05421612	0.
1	0916	279	0.	.0	1630.0	*	2	0730	946	0.	6.1	1639.0	*	3	05441613	0.
1	0918	280	0.	.0	1630.0	*	2	0732	947	0.	6.1	1639.0	*	3	05461614	0.
1	0920	281	0.	.0	1630.0	*	2	0734	948	0.	6.1	1639.0	*	3	05481615	0.
1	0922	282	0.	.0	1630.0	*	2	0736	949	0.	6.1	1639.0	*	3	05501616	0.
1	0924	283	0.	.0	1630.0	*	2	0738	950	0.	6.1	1639.0	*	3	05521617	0.
1	0926	284	0.	.0	1630.0	*	2	0740	951	0.	6.1	1639.0	*	3	05541618	0.

1	0928	285	0.	.0	1630.0	*	2	0742	952	0.	6.1	1639.0	*	3	05561619	0.
1	0930	286	0.	.0	1630.0	*	2	0744	953	0.	6.1	1639.0	*	3	05581620	0.
1	0932	287	0.	.0	1630.0	*	2	0746	954	0.	6.1	1639.0	*	3	06001621	0.
1	0934	288	0.	.0	1630.0	*	2	0748	955	0.	6.1	1639.0	*	3	06021622	0.
	0936	289	0.	.0	1630.0	*	2	0750	956	0.	6.1	1639.0	*	3	06041623	0.
	0938	290	0.	.0	1630.0	*	2	0752	957	0.	6.1	1639.0	*	3	06061624	0.
1	0940	291	0.	.0	1630.0	*	2	0754	958	0.	6.1	1639.0	*	3	06081625	0.
1	0942	292	0.	.0	1630.0	*	2	0756	959	0.	6.1	1639.0	*	3	06101626	0.
1	0944	293	0.	.0	1630.0	*	2	0758	960	0.	6.1	1639.0	*	3	06121627	0.
1	0946	294	0.	.0	1630.0	*	2	0800	961	0.	6.1	1639.0	*	3	06141628	0.
1	0948	295	0.	.0	1630.0	*	2	0802	962	0.	6.1	1639.0	*	3	06161629	0.
1	0950	296	0.	.0	1630.0	*	2	0804	963	0.	6.1	1639.0	*	3	06181630	0.
1	0952	297	0.	.0	1630.0	*	2	0806	964	0.	6.1	1639.0	*	3	06201631	0.
1	0954	298	0.	.0	1630.0	*	2	0808	965	0.	6.1	1639.0	*	3	06221632	0.
1	0956	299	0.	.0	1630.0	*	2	0810	966	0.	6.1	1639.0	*	3	06241633	0.
1	0958	300	0.	.0	1630.0	*	2	0812	967	0.	6.1	1639.0	*	3	06261634	0.
1	1000	301	0.	.0	1630.0	*	2	0814	968	0.	6.1	1639.0	*	3	06281635	0.
1	1002	302	0.	.0	1630.0	*	2	0816	969	0.	6.1	1639.0	*	3	06301636	0.
1	1004	303	0.	.0	1630.0	*	2	0818	970	0.	6.1	1639.0	*	3	06321637	0.
1	1006	304	0.	.0	1630.0	*	2	0820	971	0.	6.1	1639.0	*	3	06341638	0.
1	1008	305	0.	.0	1630.0	*	2	0822	972	0.	6.1	1639.0	*	3	06361639	0.
1	1010	306	0.	.0	1630.0	*	2	0824	973	0.	6.1	1639.0	*	3	06381640	0.
1	1012	307	0.	.0	1630.0	*	2	0826	974	0.	6.1	1639.0	*	3	06401641	0.
1	1014	308	0.	.0	1630.0	*	2	0828	975	0.	6.1	1639.0	*	3	06421642	0.
1	1016	309	0.	.0	1630.0	*	2	0830	976	0.	6.1	1639.0	*	3	06441643	0.
1	1018	310	0.	.0	1630.0	*	2	0832	977	0.	6.1	1639.0	*	3	06461644	0.
1	1020	311	0.	.0	1630.0	*	2	0834	978	0.	6.1	1639.0	*	3	06481645	0.
1	1022	312	0.	.0	1630.0	*	2	0836	979	0.	6.1	1639.0	*	3	06501646	0.
1	1024	313	0.	.0	1630.0	*	2	0838	980	0.	6.1	1639.0	*	3	06521647	0.
1	1026	314	0.	.0	1630.0	*	2	0840	981	0.	6.1	1639.0	*	3	06541648	0.
1	1028	315	0.	.0	1630.0	*	2	0842	982	0.	6.1	1639.0	*	3	06561649	0.
1	1030	316	0.	.0	1630.0	*	2	0844	983	0.	6.1	1639.0	*	3	06581650	0.
1	1032	317	0.	.0	1630.0	*	2	0846	984	0.	6.1	1639.0	*	3	07001651	0.
1	1034	318	0.	.0	1630.0	*	2	0848	985	0.	6.1	1639.0	*	3	07021652	0.
1	1036	319	0.	.0	1630.0	*	2	0850	986	0.	6.1	1639.0	*	3	07041653	0.
1	1038	320	0.	.0	1630.0	*	2	0852	987	0.	6.1	1639.0	*	3	07061654	0.
1	1040	321	0.	.0	1630.0	*	2	0854	988	0.	6.1	1639.0	*	3	07081655	0.
1	1042	322	0.	.0	1630.0	*	2	0856	989	0.	6.1	1639.0	*	3	07101656	0.
1	1044	323	0.	.0	1630.0	*	2	0858	990	0.	6.1	1639.0	*	3	07121657	0.
	1046	324	0.	.0	1630.0	*	2	0900	991	0.	6.1	1639.0	*	3	07141658	0.
	1048	325	0.	.0	1630.0	*	2	0902	992	0.	6.1	1639.0	*	3	07161659	0.
	1050	326	0.	.0	1630.0	*	2	0904	993	0.	6.1	1639.0	*	3	07181660	0.
1	1052	327	0.	.0	1630.0	*	2	0906	994	0.	6.1	1639.0	*	3	07201661	0.
1	1054	328	0.	.0	1630.0	*	2	0908	995	0.	6.1	1639.0	*	3	07221662	0.
1	1056	329	0.	.0	1630.0	*	2	0910	996	0.	6.1	1639.0	*	3	07241663	0.
1	1058	330	0.	.0	1630.0	*	2	0912	997	0.	6.1	1639.0	*	3	07261664	0.
1	1100	331	0.	.0	1630.0	*	2	0914	998	0.	6.1	1639.0	*	3	07281665	0.
1	1102	332	0.	.0	1630.0	*	2	0916	999	0.	6.1	1639.0	*	3	07301666	0.
1	1104	333	0.	.0	1630.0	*	2	09181000		0.	6.1	1639.0	*	3	07321667	0.
1	1106	334	0.	.0	1630.0	*	2	09201001		0.	6.1	1639.0	*	3	07341668	0.
1	1108	335	0.	.0	1630.0	*	2	09221002		0.	6.1	1639.0	*	3	07361669	0.
1	1110	336	0.	.0	1630.0	*	2	09241003		0.	6.1	1639.0	*	3	07381670	0.
1	1112	337	0.	.0	1630.0	*	2	09261004		0.	6.1	1639.0	*	3	07401671	0.
1	1114	338	0.	.0	1630.0	*	2	09281005		0.	6.1	1639.0	*	3	07421672	0.
1	1116	339	0.	.0	1630.0	*	2	09301006		0.	6.1	1639.0	*	3	07441673	0.
1	1118	340	0.	.0	1630.0	*	2	09321007		0.	6.1	1639.0	*	3	07461674	0.
1	1120	341	0.	.0	1630.0	*	2	09341008		0.	6.1	1639.0	*	3	07481675	0.
1	1122	342	0.	.0	1630.0	*	2	09361009		0.	6.1	1639.0	*	3	07501676	0.
1	1124	343	0.	.0	1630.0	*	2	09381010		0.	6.1	1639.0	*	3	07521677	0.
1	1126	344	0.	.0	1630.0	*	2	09401011		0.	6.1	1639.0	*	3	07541678	0.
1	1128	345	0.	.0	1630.0	*	2	09421012		0.	6.1	1639.0	*	3	07561679	0.
1	1130	346	0.	.0	1630.0	*	2	09441013		0.	6.1	1639.0	*	3	07581680	0.
1	1132	347	0.	.0	1630.0	*	2	09461014		0.	6.1	1639.0	*	3	08001681	0.
1	1134	348	0.	.0	1630.0	*	2	09481015		0.	6.1	1639.0	*	3	08021682	0.
1	1136	349	0.	.0	1630.0	*	2	09501016		0.	6.1	1639.0	*	3	08041683	0.
1	1138	350	0.	.0	1630.0	*	2	09521017		0.	6.1	1639.0	*	3	08061684	0.
1	1140	351	0.	.0	1630.0	*	2	09541018		0.	6.1	1639.0	*	3	08081685	0.
1	1142	352	0.	.0	1630.0	*	2	09561019		0.	6.1	1639.0	*	3	08101686	0.
1	1144	353	0.	.0	1630.0	*	2	09581020		0.	6.1	1639.0	*	3	08121687	0.
1	1146	354	0.	.0	1630.0	*	2	10001021		0.	6.1	1639.0	*	3	08141688	0.
1	1148	355	0.	.0	1630.0	*	2	10021022		0.	6.1	1639.0	*	3	08161689	0.
1	1150	356	0.	.0	1630.0	*	2	10041023		0.	6.1	1639.0	*	3	08181690	0.
1	1152	357	0.	.0	1630.1	*	2	10061024		0.	6.1	1639.0	*	3	08201691	0.
1	1154	358	0.	.1	1630.7	*	2	10081025		0.	6.1	1639.0	*	3	08221692	0.
1	1156	359	0.	.3	1631.5	*	2	10101026		0.	6.1	1639.0	*	3	08241693	0.
	1158	360	0.	.7	1632.4	*	2	10121027		0.	6.1	1639.0	*	3	08261694	0.
	1200	361	0.	1.1	1633.3	*	2	10141028		0.	6.1	1639.0	*	3	08281695	0.
	1202	362	0.	1.6	1634.2	*	2	10161029		0.	6.1	1639.0	*	3	08301696	0.
1	1204	363	0.	2.2	1635.1	*	2	10181030		0.	6.1	1639.0	*	3	08321697	0.
1	1206	364	0.	2.9	1635.9	*	2	10201031		0.	6.1	1639.0	*	3	08341698	0.
1	1208	365	0.	3.6	1636.8	*	2	10221032		0.	6.1	1639.0	*	3	08361699	0.
1	1210	366	0.	4.4	1637.6	*	2	10241033		0.	6.1	1639.0	*	3	08381700	0.
1	1212	367	0.	5.3	1638.3	*	2	10261034		0.	6.1	1639.0	*	3	08401701	0.
1	1214	368	0.	6.1	1639.0	*	2	10281035		0.	6.1	1639.0	*	3	08421702	0.

1	1216	369	14.	6.9	1639.6	*	2	10301036	0.	6.1	1639.0	*	3	08441703	0.
1	1218	370	37.	7.6	1640.1	*	2	10321037	0.	6.1	1639.0	*	3	08461704	0.
1	1220	371	101.	8.1	1640.4	*	2	10341038	0.	6.1	1639.0	*	3	08481705	0.
1	1222	372	139.	8.4	1640.6	*	2	10361039	0.	6.1	1639.0	*	3	08501706	0.
1	1224	373	159.	8.5	1640.7	*	2	10381040	0.	6.1	1639.0	*	3	08521707	0.
1	1226	374	168.	8.6	1640.7	*	2	10401041	0.	6.1	1639.0	*	3	08541708	0.
1	1228	375	169.	8.6	1640.7	*	2	10421042	0.	6.1	1639.0	*	3	08561709	0.
1	1230	376	165.	8.6	1640.7	*	2	10441043	0.	6.1	1639.0	*	3	08581710	0.
1	1232	377	158.	8.5	1640.7	*	2	10461044	0.	6.1	1639.0	*	3	09001711	0.
1	1234	378	147.	8.4	1640.6	*	2	10481045	0.	6.1	1639.0	*	3	09021712	0.
1	1236	379	131.	8.3	1640.5	*	2	10501046	0.	6.1	1639.0	*	3	09041713	0.
1	1238	380	111.	8.2	1640.4	*	2	10521047	0.	6.1	1639.0	*	3	09061714	0.
1	1240	381	85.	8.0	1640.3	*	2	10541048	0.	6.1	1639.0	*	3	09081715	0.
1	1242	382	64.	7.8	1640.2	*	2	10561049	0.	6.1	1639.0	*	3	09101716	0.
1	1244	383	49.	7.7	1640.1	*	2	10581050	0.	6.1	1639.0	*	3	09121717	0.
1	1246	384	37.	7.6	1640.1	*	2	11001051	0.	6.1	1639.0	*	3	09141718	0.
1	1248	385	28.	7.5	1640.0	*	2	11021052	0.	6.1	1639.0	*	3	09161719	0.
1	1250	386	24.	7.5	1640.0	*	2	11041053	0.	6.1	1639.0	*	3	09181720	0.
1	1252	387	23.	7.4	1639.9	*	2	11061054	0.	6.1	1639.0	*	3	09201721	0.
1	1254	388	22.	7.3	1639.9	*	2	11081055	0.	6.1	1639.0	*	3	09221722	0.
1	1256	389	21.	7.3	1639.8	*	2	11101056	0.	6.1	1639.0	*	3	09241723	0.
1	1258	390	20.	7.2	1639.8	*	2	11121057	0.	6.1	1639.0	*	3	09261724	0.
1	1300	391	19.	7.2	1639.8	*	2	11141058	0.	6.1	1639.0	*	3	09281725	0.
1	1302	392	18.	7.1	1639.7	*	2	11161059	0.	6.1	1639.0	*	3	09301726	0.
1	1304	393	17.	7.1	1639.7	*	2	11181060	0.	6.1	1639.0	*	3	09321727	0.
1	1306	394	16.	7.0	1639.7	*	2	11201061	0.	6.1	1639.0	*	3	09341728	0.
1	1308	395	16.	7.0	1639.6	*	2	11221062	0.	6.1	1639.0	*	3	09361729	0.
1	1310	396	15.	6.9	1639.6	*	2	11241063	0.	6.1	1639.0	*	3	09381730	0.
1	1312	397	14.	6.9	1639.6	*	2	11261064	0.	6.1	1639.0	*	3	09401731	0.
1	1314	398	13.	6.8	1639.5	*	2	11281065	0.	6.1	1639.0	*	3	09421732	0.
1	1316	399	13.	6.8	1639.5	*	2	11301066	0.	6.1	1639.0	*	3	09441733	0.
1	1318	400	12.	6.8	1639.5	*	2	11321067	0.	6.1	1639.0	*	3	09461734	0.
1	1320	401	12.	6.7	1639.5	*	2	11341068	0.	6.1	1639.0	*	3	09481735	0.
1	1322	402	11.	6.7	1639.4	*	2	11361069	0.	6.1	1639.0	*	3	09501736	0.
1	1324	403	11.	6.7	1639.4	*	2	11381070	0.	6.1	1639.0	*	3	09521737	0.
1	1326	404	10.	6.7	1639.4	*	2	11401071	0.	6.1	1639.0	*	3	09541738	0.
1	1328	405	10.	6.6	1639.4	*	2	11421072	0.	6.1	1639.0	*	3	09561739	0.
1	1330	406	9.	6.6	1639.4	*	2	11441073	0.	6.1	1639.0	*	3	09581740	0.
1	1332	407	9.	6.6	1639.3	*	2	11461074	0.	6.1	1639.0	*	3	10001741	0.
1	1334	408	8.	6.6	1639.3	*	2	11481075	0.	6.1	1639.0	*	3	10021742	0.
1	1336	409	8.	6.5	1639.3	*	2	11501076	0.	6.1	1639.0	*	3	10041743	0.
1	1338	410	7.	6.5	1639.3	*	2	11521077	0.	6.1	1639.0	*	3	10061744	0.
1	1340	411	7.	6.5	1639.3	*	2	11541078	0.	6.1	1639.0	*	3	10081745	0.
1	1342	412	7.	6.5	1639.3	*	2	11561079	0.	6.1	1639.0	*	3	10101746	0.
1	1344	413	6.	6.5	1639.3	*	2	11581080	0.	6.1	1639.0	*	3	10121747	0.
1	1346	414	6.	6.4	1639.2	*	2	12001081	0.	6.1	1639.0	*	3	10141748	0.
1	1348	415	6.	6.4	1639.2	*	2	12021082	0.	6.1	1639.0	*	3	10161749	0.
1	1350	416	6.	6.4	1639.2	*	2	12041083	0.	6.1	1639.0	*	3	10181750	0.
1	1352	417	5.	6.4	1639.2	*	2	12061084	0.	6.1	1639.0	*	3	10201751	0.
1	1354	418	5.	6.4	1639.2	*	2	12081085	0.	6.1	1639.0	*	3	10221752	0.
1	1356	419	5.	6.4	1639.2	*	2	12101086	0.	6.1	1639.0	*	3	10241753	0.
1	1358	420	5.	6.4	1639.2	*	2	12121087	0.	6.1	1639.0	*	3	10261754	0.
1	1400	421	4.	6.3	1639.2	*	2	12141088	0.	6.1	1639.0	*	3	10281755	0.
1	1402	422	4.	6.3	1639.2	*	2	12161089	0.	6.1	1639.0	*	3	10301756	0.
1	1404	423	4.	6.3	1639.2	*	2	12181090	0.	6.1	1639.0	*	3	10321757	0.
1	1406	424	4.	6.3	1639.1	*	2	12201091	0.	6.1	1639.0	*	3	10341758	0.
1	1408	425	4.	6.3	1639.1	*	2	12221092	0.	6.1	1639.0	*	3	10361759	0.
1	1410	426	3.	6.3	1639.1	*	2	12241093	0.	6.1	1639.0	*	3	10381760	0.
1	1412	427	3.	6.3	1639.1	*	2	12261094	0.	6.1	1639.0	*	3	10401761	0.
1	1414	428	3.	6.3	1639.1	*	2	12281095	0.	6.1	1639.0	*	3	10421762	0.
1	1416	429	3.	6.3	1639.1	*	2	12301096	0.	6.1	1639.0	*	3	10441763	0.
1	1418	430	3.	6.3	1639.1	*	2	12321097	0.	6.1	1639.0	*	3	10461764	0.
1	1420	431	3.	6.2	1639.1	*	2	12341098	0.	6.1	1639.0	*	3	10481765	0.
1	1422	432	2.	6.2	1639.1	*	2	12361099	0.	6.1	1639.0	*	3	10501766	0.
1	1424	433	2.	6.2	1639.1	*	2	12381100	0.	6.1	1639.0	*	3	10521767	0.
1	1426	434	2.	6.2	1639.1	*	2	12401101	0.	6.1	1639.0	*	3	10541768	0.
1	1428	435	2.	6.2	1639.1	*	2	12421102	0.	6.1	1639.0	*	3	10561769	0.
1	1430	436	2.	6.2	1639.1	*	2	12441103	0.	6.1	1639.0	*	3	10581770	0.
1	1432	437	2.	6.2	1639.1	*	2	12461104	0.	6.1	1639.0	*	3	11001771	0.
1	1434	438	2.	6.2	1639.1	*	2	12481105	0.	6.1	1639.0	*	3	11021772	0.
1	1436	439	2.	6.2	1639.1	*	2	12501106	0.	6.1	1639.0	*	3	11041773	0.
1	1438	440	2.	6.2	1639.1	*	2	12521107	0.	6.1	1639.0	*	3	11061774	0.
1	1440	441	2.	6.2	1639.1	*	2	12541108	0.	6.1	1639.0	*	3	11081775	0.
1	1442	442	2.	6.2	1639.1	*	2	12561109	0.	6.1	1639.0	*	3	11101776	0.
1	1444	443	1.	6.2	1639.1	*	2	12581110	0.	6.1	1639.0	*	3	11121777	0.
1	1446	444	1.	6.2	1639.1	*	2	13001111	0.	6.1	1639.0	*	3	11141778	0.
1	1448	445	1.	6.2	1639.1	*	2	13021112	0.	6.1	1639.0	*	3	11161779	0.
1	1450	446	1.	6.2	1639.0	*	2	13041113	0.	6.1	1639.0	*	3	11181780	0.
1	1452	447	1.	6.2	1639.0	*	2	13061114	0.	6.1	1639.0	*	3	11201781	0.
1	1454	448	1.	6.2	1639.0	*	2	13081115	0.	6.1	1639.0	*	3	11221782	0.
1	1456	449	1.	6.2	1639.0	*	2	13101116	0.	6.1	1639.0	*	3	11241783	0.
1	1458	450	1.	6.2	1639.0	*	2	13121117	0.	6.1	1639.0	*	3	11261784	0.
1	1500	451	1.	6.2	1639.0	*	2	13141118	0.	6.1	1639.0	*	3	11281785	0.
1	1502	452	1.	6.2	1639.0	*	2	13161119	0.	6.1	1639.0	*	3	11301786	0.

1	1504	453	1.	6.1	1639.0	*	2	13181120	0.	6.1	1639.0	*	3	11321787	0.
1	1506	454	1.	6.1	1639.0	*	2	13201121	0.	6.1	1639.0	*	3	11341788	0.
1	1508	455	1.	6.1	1639.0	*	2	13221122	0.	6.1	1639.0	*	3	11361789	0.
1	1510	456	1.	6.1	1639.0	*	2	13241123	0.	6.1	1639.0	*	3	11381790	0.
1	1512	457	1.	6.1	1639.0	*	2	13261124	0.	6.1	1639.0	*	3	11401791	0.
1	1514	458	1.	6.1	1639.0	*	2	13281125	0.	6.1	1639.0	*	3	11421792	0.
1	1516	459	1.	6.1	1639.0	*	2	13301126	0.	6.1	1639.0	*	3	11441793	0.
1	1518	460	1.	6.1	1639.0	*	2	13321127	0.	6.1	1639.0	*	3	11461794	0.
1	1520	461	1.	6.1	1639.0	*	2	13341128	0.	6.1	1639.0	*	3	11481795	0.
1	1522	462	1.	6.1	1639.0	*	2	13361129	0.	6.1	1639.0	*	3	11501796	0.
1	1524	463	1.	6.1	1639.0	*	2	13381130	0.	6.1	1639.0	*	3	11521797	0.
1	1526	464	1.	6.1	1639.0	*	2	13401131	0.	6.1	1639.0	*	3	11541798	0.
1	1528	465	0.	6.1	1639.0	*	2	13421132	0.	6.1	1639.0	*	3	11561799	0.
1	1530	466	0.	6.1	1639.0	*	2	13441133	0.	6.1	1639.0	*	3	11581800	0.
1	1532	467	0.	6.1	1639.0	*	2	13461134	0.	6.1	1639.0	*	3	12001801	0.
1	1534	468	0.	6.1	1639.0	*	2	13481135	0.	6.1	1639.0	*	3	12021802	0.
1	1536	469	0.	6.1	1639.0	*	2	13501136	0.	6.1	1639.0	*	3	12041803	0.
1	1538	470	0.	6.1	1639.0	*	2	13521137	0.	6.1	1639.0	*	3	12061804	0.
1	1540	471	0.	6.1	1639.0	*	2	13541138	0.	6.1	1639.0	*	3	12081805	0.
1	1542	472	0.	6.1	1639.0	*	2	13561139	0.	6.1	1639.0	*	3	12101806	0.
1	1544	473	0.	6.1	1639.0	*	2	13581140	0.	6.1	1639.0	*	3	12121807	0.
1	1546	474	0.	6.1	1639.0	*	2	14001141	0.	6.1	1639.0	*	3	12141808	0.
1	1548	475	0.	6.1	1639.0	*	2	14021142	0.	6.1	1639.0	*	3	12161809	0.
1	1550	476	0.	6.1	1639.0	*	2	14041143	0.	6.1	1639.0	*	3	12181810	0.
1	1552	477	0.	6.1	1639.0	*	2	14061144	0.	6.1	1639.0	*	3	12201811	0.
1	1554	478	0.	6.1	1639.0	*	2	14081145	0.	6.1	1639.0	*	3	12221812	0.
1	1556	479	0.	6.1	1639.0	*	2	14101146	0.	6.1	1639.0	*	3	12241813	0.
1	1558	480	0.	6.1	1639.0	*	2	14121147	0.	6.1	1639.0	*	3	12261814	0.
1	1600	481	0.	6.1	1639.0	*	2	14141148	0.	6.1	1639.0	*	3	12281815	0.
1	1602	482	0.	6.1	1639.0	*	2	14161149	0.	6.1	1639.0	*	3	12301816	0.
1	1604	483	0.	6.1	1639.0	*	2	14181150	0.	6.1	1639.0	*	3	12321817	0.
1	1606	484	0.	6.1	1639.0	*	2	14201151	0.	6.1	1639.0	*	3	12341818	0.
1	1608	485	0.	6.1	1639.0	*	2	14221152	0.	6.1	1639.0	*	3	12361819	0.
1	1610	486	0.	6.1	1639.0	*	2	14241153	0.	6.1	1639.0	*	3	12381820	0.
1	1612	487	0.	6.1	1639.0	*	2	14261154	0.	6.1	1639.0	*	3	12401821	0.
1	1614	488	0.	6.1	1639.0	*	2	14281155	0.	6.1	1639.0	*	3	12421822	0.
1	1616	489	0.	6.1	1639.0	*	2	14301156	0.	6.1	1639.0	*	3	12441823	0.
1	1618	490	0.	6.1	1639.0	*	2	14321157	0.	6.1	1639.0	*	3	12461824	0.
1	1620	491	0.	6.1	1639.0	*	2	14341158	0.	6.1	1639.0	*	3	12481825	0.
1	1622	492	0.	6.1	1639.0	*	2	14361159	0.	6.1	1639.0	*	3	12501826	0.
1	1624	493	0.	6.1	1639.0	*	2	14381160	0.	6.1	1639.0	*	3	12521827	0.
1	1626	494	0.	6.1	1639.0	*	2	14401161	0.	6.1	1639.0	*	3	12541828	0.
1	1628	495	0.	6.1	1639.0	*	2	14421162	0.	6.1	1639.0	*	3	12561829	0.
1	1630	496	0.	6.1	1639.0	*	2	14441163	0.	6.1	1639.0	*	3	12581830	0.
1	1632	497	0.	6.1	1639.0	*	2	14461164	0.	6.1	1639.0	*	3	13001831	0.
1	1634	498	0.	6.1	1639.0	*	2	14481165	0.	6.1	1639.0	*	3	13021832	0.
1	1636	499	0.	6.1	1639.0	*	2	14501166	0.	6.1	1639.0	*	3	13041833	0.
1	1638	500	0.	6.1	1639.0	*	2	14521167	0.	6.1	1639.0	*	3	13061834	0.
1	1640	501	0.	6.1	1639.0	*	2	14541168	0.	6.1	1639.0	*	3	13081835	0.
1	1642	502	0.	6.1	1639.0	*	2	14561169	0.	6.1	1639.0	*	3	13101836	0.
1	1644	503	0.	6.1	1639.0	*	2	14581170	0.	6.1	1639.0	*	3	13121837	0.
1	1646	504	0.	6.1	1639.0	*	2	15001171	0.	6.1	1639.0	*	3	13141838	0.
1	1648	505	0.	6.1	1639.0	*	2	15021172	0.	6.1	1639.0	*	3	13161839	0.
1	1650	506	0.	6.1	1639.0	*	2	15041173	0.	6.1	1639.0	*	3	13181840	0.
1	1652	507	0.	6.1	1639.0	*	2	15061174	0.	6.1	1639.0	*	3	13201841	0.
1	1654	508	0.	6.1	1639.0	*	2	15081175	0.	6.1	1639.0	*	3	13221842	0.
1	1656	509	0.	6.1	1639.0	*	2	15101176	0.	6.1	1639.0	*	3	13241843	0.
1	1658	510	0.	6.1	1639.0	*	2	15121177	0.	6.1	1639.0	*	3	13261844	0.
1	1700	511	0.	6.1	1639.0	*	2	15141178	0.	6.1	1639.0	*	3	13281845	0.
1	1702	512	0.	6.1	1639.0	*	2	15161179	0.	6.1	1639.0	*	3	13301846	0.
1	1704	513	0.	6.1	1639.0	*	2	15181180	0.	6.1	1639.0	*	3	13321847	0.
1	1706	514	0.	6.1	1639.0	*	2	15201181	0.	6.1	1639.0	*	3	13341848	0.
1	1708	515	0.	6.1	1639.0	*	2	15221182	0.	6.1	1639.0	*	3	13361849	0.
1	1710	516	0.	6.1	1639.0	*	2	15241183	0.	6.1	1639.0	*	3	13381850	0.
1	1712	517	0.	6.1	1639.0	*	2	15261184	0.	6.1	1639.0	*	3	13401851	0.
1	1714	518	0.	6.1	1639.0	*	2	15281185	0.	6.1	1639.0	*	3	13421852	0.
1	1716	519	0.	6.1	1639.0	*	2	15301186	0.	6.1	1639.0	*	3	13441853	0.
1	1718	520	0.	6.1	1639.0	*	2	15321187	0.	6.1	1639.0	*	3	13461854	0.
1	1720	521	0.	6.1	1639.0	*	2	15341188	0.	6.1	1639.0	*	3	13481855	0.
1	1722	522	0.	6.1	1639.0	*	2	15361189	0.	6.1	1639.0	*	3	13501856	0.
1	1724	523	0.	6.1	1639.0	*	2	15381190	0.	6.1	1639.0	*	3	13521857	0.
1	1726	524	0.	6.1	1639.0	*	2	15401191	0.	6.1	1639.0	*	3	13541858	0.
1	1728	525	0.	6.1	1639.0	*	2	15421192	0.	6.1	1639.0	*	3	13561859	0.
1	1730	526	0.	6.1	1639.0	*	2	15441193	0.	6.1	1639.0	*	3	13581860	0.
1	1732	527	0.	6.1	1639.0	*	2	15461194	0.	6.1	1639.0	*	3	14001861	0.
1	1734	528	0.	6.1	1639.0	*	2	15481195	0.	6.1	1639.0	*	3	14021862	0.
1	1736	529	0.	6.1	1639.0	*	2	15501196	0.	6.1	1639.0	*	3	14041863	0.
1	1738	530	0.	6.1	1639.0	*	2	15521197	0.	6.1	1639.0	*	3	14061864	0.
1	1740	531	0.	6.1	1639.0	*	2	15541198	0.	6.1	1639.0	*	3	14081865	0.
1	1742	532	0.	6.1	1639.0	*	2	15561199	0.	6.1	1639.0	*	3	14101866	0.
1	1744	533	0.	6.1	1639.0	*	2	15581200	0.	6.1	1639.0	*	3	14121867	0.
1	1746	534	0.	6.1	1639.0	*	2	16001201	0.	6.1	1639.0	*	3	14141868	0.
1	1748	535	0.	6.1	1639.0	*	2	16021202	0.	6.1	1639.0	*	3	14161869	0.
1	1750	536	0.	6.1	1639.0	*	2	16041203	0.	6.1	1639.0	*	3	14181870	0.

1	1752	537	0.	6.1	1639.0	*	2	16061204	0.	6.1	1639.0	*	3	14201871	0.
1	1754	538	0.	6.1	1639.0	*	2	16081205	0.	6.1	1639.0	*	3	14221872	0.
1	1756	539	0.	6.1	1639.0	*	2	16101206	0.	6.1	1639.0	*	3	14241873	0.
1	1758	540	0.	6.1	1639.0	*	2	16121207	0.	6.1	1639.0	*	3	14261874	0.
1	1800	541	0.	6.1	1639.0	*	2	16141208	0.	6.1	1639.0	*	3	14281875	0.
1	1802	542	0.	6.1	1639.0	*	2	16161209	0.	6.1	1639.0	*	3	14301876	0.
1	1804	543	0.	6.1	1639.0	*	2	16181210	0.	6.1	1639.0	*	3	14321877	0.
1	1806	544	0.	6.1	1639.0	*	2	16201211	0.	6.1	1639.0	*	3	14341878	0.
1	1808	545	0.	6.1	1639.0	*	2	16221212	0.	6.1	1639.0	*	3	14361879	0.
1	1810	546	0.	6.1	1639.0	*	2	16241213	0.	6.1	1639.0	*	3	14381880	0.
1	1812	547	0.	6.1	1639.0	*	2	16261214	0.	6.1	1639.0	*	3	14401881	0.
1	1814	548	0.	6.1	1639.0	*	2	16281215	0.	6.1	1639.0	*	3	14421882	0.
1	1816	549	0.	6.1	1639.0	*	2	16301216	0.	6.1	1639.0	*	3	14441883	0.
1	1818	550	0.	6.1	1639.0	*	2	16321217	0.	6.1	1639.0	*	3	14461884	0.
1	1820	551	0.	6.1	1639.0	*	2	16341218	0.	6.1	1639.0	*	3	14481885	0.
1	1822	552	0.	6.1	1639.0	*	2	16361219	0.	6.1	1639.0	*	3	14501886	0.
1	1824	553	0.	6.1	1639.0	*	2	16381220	0.	6.1	1639.0	*	3	14521887	0.
1	1826	554	0.	6.1	1639.0	*	2	16401221	0.	6.1	1639.0	*	3	14541888	0.
1	1828	555	0.	6.1	1639.0	*	2	16421222	0.	6.1	1639.0	*	3	14561889	0.
1	1830	556	0.	6.1	1639.0	*	2	16441223	0.	6.1	1639.0	*	3	14581890	0.
1	1832	557	0.	6.1	1639.0	*	2	16461224	0.	6.1	1639.0	*	3	15001891	0.
1	1834	558	0.	6.1	1639.0	*	2	16481225	0.	6.1	1639.0	*	3	15021892	0.
1	1836	559	0.	6.1	1639.0	*	2	16501226	0.	6.1	1639.0	*	3	15041893	0.
1	1838	560	0.	6.1	1639.0	*	2	16521227	0.	6.1	1639.0	*	3	15061894	0.
1	1840	561	0.	6.1	1639.0	*	2	16541228	0.	6.1	1639.0	*	3	15081895	0.
1	1842	562	0.	6.1	1639.0	*	2	16561229	0.	6.1	1639.0	*	3	15101896	0.
1	1844	563	0.	6.1	1639.0	*	2	16581230	0.	6.1	1639.0	*	3	15121897	0.
1	1846	564	0.	6.1	1639.0	*	2	17001231	0.	6.1	1639.0	*	3	15141898	0.
1	1848	565	0.	6.1	1639.0	*	2	17021232	0.	6.1	1639.0	*	3	15161899	0.
1	1850	566	0.	6.1	1639.0	*	2	17041233	0.	6.1	1639.0	*	3	15181900	0.
1	1852	567	0.	6.1	1639.0	*	2	17061234	0.	6.1	1639.0	*	3	15201901	0.
1	1854	568	0.	6.1	1639.0	*	2	17081235	0.	6.1	1639.0	*	3	15221902	0.
1	1856	569	0.	6.1	1639.0	*	2	17101236	0.	6.1	1639.0	*	3	15241903	0.
1	1858	570	0.	6.1	1639.0	*	2	17121237	0.	6.1	1639.0	*	3	15261904	0.
1	1900	571	0.	6.1	1639.0	*	2	17141238	0.	6.1	1639.0	*	3	15281905	0.
1	1902	572	0.	6.1	1639.0	*	2	17161239	0.	6.1	1639.0	*	3	15301906	0.
1	1904	573	0.	6.1	1639.0	*	2	17181240	0.	6.1	1639.0	*	3	15321907	0.
1	1906	574	0.	6.1	1639.0	*	2	17201241	0.	6.1	1639.0	*	3	15341908	0.
1	1908	575	0.	6.1	1639.0	*	2	17221242	0.	6.1	1639.0	*	3	15361909	0.
1	1910	576	0.	6.1	1639.0	*	2	17241243	0.	6.1	1639.0	*	3	15381910	0.
1	1912	577	0.	6.1	1639.0	*	2	17261244	0.	6.1	1639.0	*	3	15401911	0.
1	1914	578	0.	6.1	1639.0	*	2	17281245	0.	6.1	1639.0	*	3	15421912	0.
1	1916	579	0.	6.1	1639.0	*	2	17301246	0.	6.1	1639.0	*	3	15441913	0.
1	1918	580	0.	6.1	1639.0	*	2	17321247	0.	6.1	1639.0	*	3	15461914	0.
1	1920	581	0.	6.1	1639.0	*	2	17341248	0.	6.1	1639.0	*	3	15481915	0.
1	1922	582	0.	6.1	1639.0	*	2	17361249	0.	6.1	1639.0	*	3	15501916	0.
1	1924	583	0.	6.1	1639.0	*	2	17381250	0.	6.1	1639.0	*	3	15521917	0.
1	1926	584	0.	6.1	1639.0	*	2	17401251	0.	6.1	1639.0	*	3	15541918	0.
1	1928	585	0.	6.1	1639.0	*	2	17421252	0.	6.1	1639.0	*	3	15561919	0.
1	1930	586	0.	6.1	1639.0	*	2	17441253	0.	6.1	1639.0	*	3	15581920	0.
1	1932	587	0.	6.1	1639.0	*	2	17461254	0.	6.1	1639.0	*	3	16001921	0.
1	1934	588	0.	6.1	1639.0	*	2	17481255	0.	6.1	1639.0	*	3	16021922	0.
1	1936	589	0.	6.1	1639.0	*	2	17501256	0.	6.1	1639.0	*	3	16041923	0.
1	1938	590	0.	6.1	1639.0	*	2	17521257	0.	6.1	1639.0	*	3	16061924	0.
1	1940	591	0.	6.1	1639.0	*	2	17541258	0.	6.1	1639.0	*	3	16081925	0.
1	1942	592	0.	6.1	1639.0	*	2	17561259	0.	6.1	1639.0	*	3	16101926	0.
1	1944	593	0.	6.1	1639.0	*	2	17581260	0.	6.1	1639.0	*	3	16121927	0.
1	1946	594	0.	6.1	1639.0	*	2	18001261	0.	6.1	1639.0	*	3	16141928	0.
1	1948	595	0.	6.1	1639.0	*	2	18021262	0.	6.1	1639.0	*	3	16161929	0.
1	1950	596	0.	6.1	1639.0	*	2	18041263	0.	6.1	1639.0	*	3	16181930	0.
1	1952	597	0.	6.1	1639.0	*	2	18061264	0.	6.1	1639.0	*	3	16201931	0.
1	1954	598	0.	6.1	1639.0	*	2	18081265	0.	6.1	1639.0	*	3	16221932	0.
1	1956	599	0.	6.1	1639.0	*	2	18101266	0.	6.1	1639.0	*	3	16241933	0.
1	1958	600	0.	6.1	1639.0	*	2	18121267	0.	6.1	1639.0	*	3	16261934	0.
1	2000	601	0.	6.1	1639.0	*	2	18141268	0.	6.1	1639.0	*	3	16281935	0.
1	2002	602	0.	6.1	1639.0	*	2	18161269	0.	6.1	1639.0	*	3	16301936	0.
1	2004	603	0.	6.1	1639.0	*	2	18181270	0.	6.1	1639.0	*	3	16321937	0.
1	2006	604	0.	6.1	1639.0	*	2	18201271	0.	6.1	1639.0	*	3	16341938	0.
1	2008	605	0.	6.1	1639.0	*	2	18221272	0.	6.1	1639.0	*	3	16361939	0.
1	2010	606	0.	6.1	1639.0	*	2	18241273	0.	6.1	1639.0	*	3	16381940	0.
1	2012	607	0.	6.1	1639.0	*	2	18261274	0.	6.1	1639.0	*	3	16401941	0.
1	2014	608	0.	6.1	1639.0	*	2	18281275	0.	6.1	1639.0	*	3	16421942	0.
1	2016	609	0.	6.1	1639.0	*	2	18301276	0.	6.1	1639.0	*	3	16441943	0.
1	2018	610	0.	6.1	1639.0	*	2	18321277	0.	6.1	1639.0	*	3	16461944	0.
1	2020	611	0.	6.1	1639.0	*	2	18341278	0.	6.1	1639.0	*	3	16481945	0.
1	2022	612	0.	6.1	1639.0	*	2	18361279	0.	6.1	1639.0	*	3	16501946	0.
1	2024	613	0.	6.1	1639.0	*	2	18381280	0.	6.1	1639.0	*	3	16521947	0.
1	2026	614	0.	6.1	1639.0	*	2	18401281	0.	6.1	1639.0	*	3	16541948	0.
1	2028	615	0.	6.1	1639.0	*	2	18421282	0.	6.1	1639.0	*	3	16561949	0.
1	2030	616	0.	6.1	1639.0	*	2	18441283	0.	6.1	1639.0	*	3	16581950	0.
1	2032	617	0.	6.1	1639.0	*	2	18461284	0.	6.1	1639.0	*	3	17001951	0.
1	2034	618	0.	6.1	1639.0	*	2	18481285	0.	6.1	1639.0	*	3	17021952	0.
1	2036	619	0.	6.1	1639.0	*	2	18501286	0.	6.1	1639.0	*	3	17041953	0.
1	2038	620	0.	6.1	1639.0	*	2	18521287	0.	6.1	1639.0	*	3	17061954	0.

1	2040	621	0.	6.1	1639.0	*	2	18541288	0.	6.1	1639.0	*	3	17081955	0.
1	2042	622	0.	6.1	1639.0	*	2	18561289	0.	6.1	1639.0	*	3	17101956	0.
1	2044	623	0.	6.1	1639.0	*	2	18581290	0.	6.1	1639.0	*	3	17121957	0.
1	2046	624	0.	6.1	1639.0	*	2	19001291	0.	6.1	1639.0	*	3	17141958	0.
	2048	625	0.	6.1	1639.0	*	2	19021292	0.	6.1	1639.0	*	3	17161959	0.
	2050	626	0.	6.1	1639.0	*	2	19041293	0.	6.1	1639.0	*	3	17181960	0.
1	2052	627	0.	6.1	1639.0	*	2	19061294	0.	6.1	1639.0	*	3	17201961	0.
1	2054	628	0.	6.1	1639.0	*	2	19081295	0.	6.1	1639.0	*	3	17221962	0.
1	2056	629	0.	6.1	1639.0	*	2	19101296	0.	6.1	1639.0	*	3	17241963	0.
1	2058	630	0.	6.1	1639.0	*	2	19121297	0.	6.1	1639.0	*	3	17261964	0.
1	2100	631	0.	6.1	1639.0	*	2	19141298	0.	6.1	1639.0	*	3	17281965	0.
1	2102	632	0.	6.1	1639.0	*	2	19161299	0.	6.1	1639.0	*	3	17301966	0.
1	2104	633	0.	6.1	1639.0	*	2	19181300	0.	6.1	1639.0	*	3	17321967	0.
1	2106	634	0.	6.1	1639.0	*	2	19201301	0.	6.1	1639.0	*	3	17341968	0.
1	2108	635	0.	6.1	1639.0	*	2	19221302	0.	6.1	1639.0	*	3	17361969	0.
1	2110	636	0.	6.1	1639.0	*	2	19241303	0.	6.1	1639.0	*	3	17381970	0.
1	2112	637	0.	6.1	1639.0	*	2	19261304	0.	6.1	1639.0	*	3	17401971	0.
1	2114	638	0.	6.1	1639.0	*	2	19281305	0.	6.1	1639.0	*	3	17421972	0.
1	2116	639	0.	6.1	1639.0	*	2	19301306	0.	6.1	1639.0	*	3	17441973	0.
1	2118	640	0.	6.1	1639.0	*	2	19321307	0.	6.1	1639.0	*	3	17461974	0.
1	2120	641	0.	6.1	1639.0	*	2	19341308	0.	6.1	1639.0	*	3	17481975	0.
1	2122	642	0.	6.1	1639.0	*	2	19361309	0.	6.1	1639.0	*	3	17501976	0.
1	2124	643	0.	6.1	1639.0	*	2	19381310	0.	6.1	1639.0	*	3	17521977	0.
1	2126	644	0.	6.1	1639.0	*	2	19401311	0.	6.1	1639.0	*	3	17541978	0.
1	2128	645	0.	6.1	1639.0	*	2	19421312	0.	6.1	1639.0	*	3	17561979	0.
1	2130	646	0.	6.1	1639.0	*	2	19441313	0.	6.1	1639.0	*	3	17581980	0.
1	2132	647	0.	6.1	1639.0	*	2	19461314	0.	6.1	1639.0	*	3	18001981	0.
1	2134	648	0.	6.1	1639.0	*	2	19481315	0.	6.1	1639.0	*	3	18021982	0.
1	2136	649	0.	6.1	1639.0	*	2	19501316	0.	6.1	1639.0	*	3	18041983	0.
1	2138	650	0.	6.1	1639.0	*	2	19521317	0.	6.1	1639.0	*	3	18061984	0.
1	2140	651	0.	6.1	1639.0	*	2	19541318	0.	6.1	1639.0	*	3	18081985	0.
1	2142	652	0.	6.1	1639.0	*	2	19561319	0.	6.1	1639.0	*	3	18101986	0.
1	2144	653	0.	6.1	1639.0	*	2	19581320	0.	6.1	1639.0	*	3	18121987	0.
1	2146	654	0.	6.1	1639.0	*	2	20001321	0.	6.1	1639.0	*	3	18141988	0.
1	2148	655	0.	6.1	1639.0	*	2	20021322	0.	6.1	1639.0	*	3	18161989	0.
1	2150	656	0.	6.1	1639.0	*	2	20041323	0.	6.1	1639.0	*	3	18181990	0.
1	2152	657	0.	6.1	1639.0	*	2	20061324	0.	6.1	1639.0	*	3	18201991	0.
1	2154	658	0.	6.1	1639.0	*	2	20081325	0.	6.1	1639.0	*	3	18221992	0.
1	2156	659	0.	6.1	1639.0	*	2	20101326	0.	6.1	1639.0	*	3	18241993	0.
1	2158	660	0.	6.1	1639.0	*	2	20121327	0.	6.1	1639.0	*	3	18261994	0.
	2200	661	0.	6.1	1639.0	*	2	20141328	0.	6.1	1639.0	*	3	18281995	0.
	2202	662	0.	6.1	1639.0	*	2	20161329	0.	6.1	1639.0	*	3	18301996	0.
1	2204	663	0.	6.1	1639.0	*	2	20181330	0.	6.1	1639.0	*	3	18321997	0.
1	2206	664	0.	6.1	1639.0	*	2	20201331	0.	6.1	1639.0	*	3	18341998	0.
1	2208	665	0.	6.1	1639.0	*	2	20221332	0.	6.1	1639.0	*	3	18361999	0.
1	2210	666	0.	6.1	1639.0	*	2	20241333	0.	6.1	1639.0	*	3	18382000	0.
1	2212	667	0.	6.1	1639.0	*	2	20261334	0.	6.1	1639.0	*			

****

PEAK FLOW	TIME		MAXIMUM AVERAGE FLOW			
			6-HR	24-HR	72-HR	66.63-HR
+ (CFS)	(HR)					
		(CFS)				
+ 169.	12.47		13.	3.	1.	1.
		(INCHES)	.074	.074	.074	.074
		(AC-FT)	6.	6.	6.	6.

PEAK STORAGE	TIME	MAXIMUM AVERAGE STORAGE			
		6-HR	24-HR	72-HR	66.63-HR
+ (AC-FT)	(HR)				
9.	12.47	6.	6.	5.	5.

PEAK STAGE	TIME	MAXIMUM AVERAGE STAGE			
		6-HR	24-HR	72-HR	66.63-HR
+ (FEET)	(HR)				
1640.72	12.47	1639.24	1639.06	1637.39	1637.39

CUMULATIVE AREA = 1.59 SQ MI

****

HYDROGRAPH AT SMCDB
TRANSPOSITION AREA 1.0 SQ MI

****

DA	MON	HRMN	ORD	OUTFLOW	STORAGE	STAGE	*	DA	MON	HRMN	ORD	OUTFLOW	STORAGE	STAGE	*	DA	MON	HRMN	ORD	OUTFLOW	STOR
1		0000	1	0.	.0	1630.0	*	1		2214	668	0.	6.1	1639.0	*	2		20281335		0.	
1		0002	2	0.	.0	1630.0	*	1		2216	669	0.	6.1	1639.0	*	2		20301336		0.	
1		0004	3	0.	.0	1630.0	*	1		2218	670	0.	6.1	1639.0	*	2		20321337		0.	
1		0006	4	0.	.0	1630.0	*	1		2220	671	0.	6.1	1639.0	*	2		20341338		0.	

1	0008	5	0.	.0	1630.0	*	1	2222	672	0.	6.1	1639.0	*	2	20361339	0.
1	0010	6	0.	.0	1630.0	*	1	2224	673	0.	6.1	1639.0	*	2	20381340	0.
1	0012	7	0.	.0	1630.0	*	1	2226	674	0.	6.1	1639.0	*	2	20401341	0.
1	0014	8	0.	.0	1630.0	*	1	2228	675	0.	6.1	1639.0	*	2	20421342	0.
1	0016	9	0.	.0	1630.0	*	1	2230	676	0.	6.1	1639.0	*	2	20441343	0.
1	0018	10	0.	.0	1630.0	*	1	2232	677	0.	6.1	1639.0	*	2	20461344	0.
1	0020	11	0.	.0	1630.0	*	1	2234	678	0.	6.1	1639.0	*	2	20481345	0.
1	0022	12	0.	.0	1630.0	*	1	2236	679	0.	6.1	1639.0	*	2	20501346	0.
1	0024	13	0.	.0	1630.0	*	1	2238	680	0.	6.1	1639.0	*	2	20521347	0.
1	0026	14	0.	.0	1630.0	*	1	2240	681	0.	6.1	1639.0	*	2	20541348	0.
1	0028	15	0.	.0	1630.0	*	1	2242	682	0.	6.1	1639.0	*	2	20561349	0.
1	0030	16	0.	.0	1630.0	*	1	2244	683	0.	6.1	1639.0	*	2	20581350	0.
1	0032	17	0.	.0	1630.0	*	1	2246	684	0.	6.1	1639.0	*	2	21001351	0.
1	0034	18	0.	.0	1630.0	*	1	2248	685	0.	6.1	1639.0	*	2	21021352	0.
1	0036	19	0.	.0	1630.0	*	1	2250	686	0.	6.1	1639.0	*	2	21041353	0.
1	0038	20	0.	.0	1630.0	*	1	2252	687	0.	6.1	1639.0	*	2	21061354	0.
1	0040	21	0.	.0	1630.0	*	1	2254	688	0.	6.1	1639.0	*	2	21081355	0.
1	0042	22	0.	.0	1630.0	*	1	2256	689	0.	6.1	1639.0	*	2	21101356	0.
1	0044	23	0.	.0	1630.0	*	1	2258	690	0.	6.1	1639.0	*	2	21121357	0.
1	0046	24	0.	.0	1630.0	*	1	2300	691	0.	6.1	1639.0	*	2	21141358	0.
1	0048	25	0.	.0	1630.0	*	1	2302	692	0.	6.1	1639.0	*	2	21161359	0.
1	0050	26	0.	.0	1630.0	*	1	2304	693	0.	6.1	1639.0	*	2	21181360	0.
1	0052	27	0.	.0	1630.0	*	1	2306	694	0.	6.1	1639.0	*	2	21201361	0.
1	0054	28	0.	.0	1630.0	*	1	2308	695	0.	6.1	1639.0	*	2	21221362	0.
1	0056	29	0.	.0	1630.0	*	1	2310	696	0.	6.1	1639.0	*	2	21241363	0.
1	0058	30	0.	.0	1630.0	*	1	2312	697	0.	6.1	1639.0	*	2	21261364	0.
1	0100	31	0.	.0	1630.0	*	1	2314	698	0.	6.1	1639.0	*	2	21281365	0.
1	0102	32	0.	.0	1630.0	*	1	2316	699	0.	6.1	1639.0	*	2	21301366	0.
1	0104	33	0.	.0	1630.0	*	1	2318	700	0.	6.1	1639.0	*	2	21321367	0.
1	0106	34	0.	.0	1630.0	*	1	2320	701	0.	6.1	1639.0	*	2	21341368	0.
1	0108	35	0.	.0	1630.0	*	1	2322	702	0.	6.1	1639.0	*	2	21361369	0.
1	0110	36	0.	.0	1630.0	*	1	2324	703	0.	6.1	1639.0	*	2	21381370	0.
1	0112	37	0.	.0	1630.0	*	1	2326	704	0.	6.1	1639.0	*	2	21401371	0.
1	0114	38	0.	.0	1630.0	*	1	2328	705	0.	6.1	1639.0	*	2	21421372	0.
1	0116	39	0.	.0	1630.0	*	1	2330	706	0.	6.1	1639.0	*	2	21441373	0.
1	0118	40	0.	.0	1630.0	*	1	2332	707	0.	6.1	1639.0	*	2	21461374	0.
1	0120	41	0.	.0	1630.0	*	1	2334	708	0.	6.1	1639.0	*	2	21481375	0.
1	0122	42	0.	.0	1630.0	*	1	2336	709	0.	6.1	1639.0	*	2	21501376	0.
1	0124	43	0.	.0	1630.0	*	1	2338	710	0.	6.1	1639.0	*	2	21521377	0.
1	0126	44	0.	.0	1630.0	*	1	2340	711	0.	6.1	1639.0	*	2	21541378	0.
1	0128	45	0.	.0	1630.0	*	1	2342	712	0.	6.1	1639.0	*	2	21561379	0.
1	0130	46	0.	.0	1630.0	*	1	2344	713	0.	6.1	1639.0	*	2	21581380	0.
1	0132	47	0.	.0	1630.0	*	1	2346	714	0.	6.1	1639.0	*	2	22001381	0.
1	0134	48	0.	.0	1630.0	*	1	2348	715	0.	6.1	1639.0	*	2	22021382	0.
1	0136	49	0.	.0	1630.0	*	1	2350	716	0.	6.1	1639.0	*	2	22041383	0.
1	0138	50	0.	.0	1630.0	*	1	2352	717	0.	6.1	1639.0	*	2	22061384	0.
1	0140	51	0.	.0	1630.0	*	1	2354	718	0.	6.1	1639.0	*	2	22081385	0.
1	0142	52	0.	.0	1630.0	*	1	2356	719	0.	6.1	1639.0	*	2	22101386	0.
1	0144	53	0.	.0	1630.0	*	1	2358	720	0.	6.1	1639.0	*	2	22121387	0.
1	0146	54	0.	.0	1630.0	*	2	0000	721	0.	6.1	1639.0	*	2	22141388	0.
1	0148	55	0.	.0	1630.0	*	2	0002	722	0.	6.1	1639.0	*	2	22161389	0.
1	0150	56	0.	.0	1630.0	*	2	0004	723	0.	6.1	1639.0	*	2	22181390	0.
1	0152	57	0.	.0	1630.0	*	2	0006	724	0.	6.1	1639.0	*	2	22201391	0.
1	0154	58	0.	.0	1630.0	*	2	0008	725	0.	6.1	1639.0	*	2	22221392	0.
1	0156	59	0.	.0	1630.0	*	2	0010	726	0.	6.1	1639.0	*	2	22241393	0.
1	0158	60	0.	.0	1630.0	*	2	0012	727	0.	6.1	1639.0	*	2	22261394	0.
1	0200	61	0.	.0	1630.0	*	2	0014	728	0.	6.1	1639.0	*	2	22281395	0.
1	0202	62	0.	.0	1630.0	*	2	0016	729	0.	6.1	1639.0	*	2	22301396	0.
1	0204	63	0.	.0	1630.0	*	2	0018	730	0.	6.1	1639.0	*	2	22321397	0.
1	0206	64	0.	.0	1630.0	*	2	0020	731	0.	6.1	1639.0	*	2	22341398	0.
1	0208	65	0.	.0	1630.0	*	2	0022	732	0.	6.1	1639.0	*	2	22361399	0.
1	0210	66	0.	.0	1630.0	*	2	0024	733	0.	6.1	1639.0	*	2	22381400	0.
1	0212	67	0.	.0	1630.0	*	2	0026	734	0.	6.1	1639.0	*	2	22401401	0.
1	0214	68	0.	.0	1630.0	*	2	0028	735	0.	6.1	1639.0	*	2	22421402	0.
1	0216	69	0.	.0	1630.0	*	2	0030	736	0.	6.1	1639.0	*	2	22441403	0.
1	0218	70	0.	.0	1630.0	*	2	0032	737	0.	6.1	1639.0	*	2	22461404	0.
1	0220	71	0.	.0	1630.0	*	2	0034	738	0.	6.1	1639.0	*	2	22481405	0.
1	0222	72	0.	.0	1630.0	*	2	0036	739	0.	6.1	1639.0	*	2	22501406	0.
1	0224	73	0.	.0	1630.0	*	2	0038	740	0.	6.1	1639.0	*	2	22521407	0.
1	0226	74	0.	.0	1630.0	*	2	0040	741	0.	6.1	1639.0	*	2	22541408	0.
1	0228	75	0.	.0	1630.0	*	2	0042	742	0.	6.1	1639.0	*	2	22561409	0.
1	0230	76	0.	.0	1630.0	*	2	0044	743	0.	6.1	1639.0	*	2	22581410	0.
1	0232	77	0.	.0	1630.0	*	2	0046	744	0.	6.1	1639.0	*	2	23001411	0.
1	0234	78	0.	.0	1630.0	*	2	0048	745	0.	6.1	1639.0	*	2	23021412	0.
1	0236	79	0.	.0	1630.0	*	2	0050	746	0.	6.1	1639.0	*	2	23041413	0.
1	0238	80	0.	.0	1630.0	*	2	0052	747	0.	6.1	1639.0	*	2	23061414	0.
1	0240	81	0.	.0	1630.0	*	2	0054	748	0.	6.1	1639.0	*	2	23081415	0.
1	0242	82	0.	.0	1630.0	*	2	0056	749	0.	6.1	1639.0	*	2	23101416	0.
1	0244	83	0.	.0	1630.0	*	2	0058	750	0.	6.1	1639.0	*	2	23121417	0.
1	0246	84	0.	.0	1630.0	*	2	0100	751	0.	6.1	1639.0	*	2	23141418	0.
1	0248	85	0.	.0	1630.0	*	2	0102	752	0.	6.1	1639.0	*	2	23161419	0.
1	0250	86	0.	.0	1630.0	*	2	0104	753	0.	6.1	1639.0	*	2	23181420	0.
1	0252	87	0.	.0	1630.0	*	2	0106	754	0.	6.1	1639.0	*	2	23201421	0.
1	0254	88	0.	.0	1630.0	*	2	0108	755	0.	6.1	1639.0	*	2	23221422	0.

1	0256	89	0.	.0	1630.0	*	2	0110	756	0.	6.1	1639.0	*	2	23241423	0.
1	0258	90	0.	.0	1630.0	*	2	0112	757	0.	6.1	1639.0	*	2	23261424	0.
1	0300	91	0.	.0	1630.0	*	2	0114	758	0.	6.1	1639.0	*	2	23281425	0.
1	0302	92	0.	.0	1630.0	*	2	0116	759	0.	6.1	1639.0	*	2	23301426	0.
	0304	93	0.	.0	1630.0	*	2	0118	760	0.	6.1	1639.0	*	2	23321427	0.
	0306	94	0.	.0	1630.0	*	2	0120	761	0.	6.1	1639.0	*	2	23341428	0.
1	0308	95	0.	.0	1630.0	*	2	0122	762	0.	6.1	1639.0	*	2	23361429	0.
1	0310	96	0.	.0	1630.0	*	2	0124	763	0.	6.1	1639.0	*	2	23381430	0.
1	0312	97	0.	.0	1630.0	*	2	0126	764	0.	6.1	1639.0	*	2	23401431	0.
1	0314	98	0.	.0	1630.0	*	2	0128	765	0.	6.1	1639.0	*	2	23421432	0.
1	0316	99	0.	.0	1630.0	*	2	0130	766	0.	6.1	1639.0	*	2	23441433	0.
1	0318	100	0.	.0	1630.0	*	2	0132	767	0.	6.1	1639.0	*	2	23461434	0.
1	0320	101	0.	.0	1630.0	*	2	0134	768	0.	6.1	1639.0	*	2	23481435	0.
1	0322	102	0.	.0	1630.0	*	2	0136	769	0.	6.1	1639.0	*	2	23501436	0.
1	0324	103	0.	.0	1630.0	*	2	0138	770	0.	6.1	1639.0	*	2	23521437	0.
1	0326	104	0.	.0	1630.0	*	2	0140	771	0.	6.1	1639.0	*	2	23541438	0.
1	0328	105	0.	.0	1630.0	*	2	0142	772	0.	6.1	1639.0	*	2	23561439	0.
1	0330	106	0.	.0	1630.0	*	2	0144	773	0.	6.1	1639.0	*	2	23581440	0.
1	0332	107	0.	.0	1630.0	*	2	0146	774	0.	6.1	1639.0	*	3	00001441	0.
1	0334	108	0.	.0	1630.0	*	2	0148	775	0.	6.1	1639.0	*	3	00021442	0.
1	0336	109	0.	.0	1630.0	*	2	0150	776	0.	6.1	1639.0	*	3	00041443	0.
1	0338	110	0.	.0	1630.0	*	2	0152	777	0.	6.1	1639.0	*	3	00061444	0.
1	0340	111	0.	.0	1630.0	*	2	0154	778	0.	6.1	1639.0	*	3	00081445	0.
1	0342	112	0.	.0	1630.0	*	2	0156	779	0.	6.1	1639.0	*	3	00101446	0.
1	0344	113	0.	.0	1630.0	*	2	0158	780	0.	6.1	1639.0	*	3	00121447	0.
1	0346	114	0.	.0	1630.0	*	2	0200	781	0.	6.1	1639.0	*	3	00141448	0.
1	0348	115	0.	.0	1630.0	*	2	0202	782	0.	6.1	1639.0	*	3	00161449	0.
1	0350	116	0.	.0	1630.0	*	2	0204	783	0.	6.1	1639.0	*	3	00181450	0.
1	0352	117	0.	.0	1630.0	*	2	0206	784	0.	6.1	1639.0	*	3	00201451	0.
1	0354	118	0.	.0	1630.0	*	2	0208	785	0.	6.1	1639.0	*	3	00221452	0.
1	0356	119	0.	.0	1630.0	*	2	0210	786	0.	6.1	1639.0	*	3	00241453	0.
1	0358	120	0.	.0	1630.0	*	2	0212	787	0.	6.1	1639.0	*	3	00261454	0.
1	0400	121	0.	.0	1630.0	*	2	0214	788	0.	6.1	1639.0	*	3	00281455	0.
1	0402	122	0.	.0	1630.0	*	2	0216	789	0.	6.1	1639.0	*	3	00301456	0.
1	0404	123	0.	.0	1630.0	*	2	0218	790	0.	6.1	1639.0	*	3	00321457	0.
1	0406	124	0.	.0	1630.0	*	2	0220	791	0.	6.1	1639.0	*	3	00341458	0.
1	0408	125	0.	.0	1630.0	*	2	0222	792	0.	6.1	1639.0	*	3	00361459	0.
1	0410	126	0.	.0	1630.0	*	2	0224	793	0.	6.1	1639.0	*	3	00381460	0.
1	0412	127	0.	.0	1630.0	*	2	0226	794	0.	6.1	1639.0	*	3	00401461	0.
	0414	128	0.	.0	1630.0	*	2	0228	795	0.	6.1	1639.0	*	3	00421462	0.
	0416	129	0.	.0	1630.0	*	2	0230	796	0.	6.1	1639.0	*	3	00441463	0.
	0418	130	0.	.0	1630.0	*	2	0232	797	0.	6.1	1639.0	*	3	00461464	0.
1	0420	131	0.	.0	1630.0	*	2	0234	798	0.	6.1	1639.0	*	3	00481465	0.
1	0422	132	0.	.0	1630.0	*	2	0236	799	0.	6.1	1639.0	*	3	00501466	0.
1	0424	133	0.	.0	1630.0	*	2	0238	800	0.	6.1	1639.0	*	3	00521467	0.
1	0426	134	0.	.0	1630.0	*	2	0240	801	0.	6.1	1639.0	*	3	00541468	0.
1	0428	135	0.	.0	1630.0	*	2	0242	802	0.	6.1	1639.0	*	3	00561469	0.
1	0430	136	0.	.0	1630.0	*	2	0244	803	0.	6.1	1639.0	*	3	00581470	0.
1	0432	137	0.	.0	1630.0	*	2	0246	804	0.	6.1	1639.0	*	3	01001471	0.
1	0434	138	0.	.0	1630.0	*	2	0248	805	0.	6.1	1639.0	*	3	01021472	0.
1	0436	139	0.	.0	1630.0	*	2	0250	806	0.	6.1	1639.0	*	3	01041473	0.
1	0438	140	0.	.0	1630.0	*	2	0252	807	0.	6.1	1639.0	*	3	01061474	0.
1	0440	141	0.	.0	1630.0	*	2	0254	808	0.	6.1	1639.0	*	3	01081475	0.
1	0442	142	0.	.0	1630.0	*	2	0256	809	0.	6.1	1639.0	*	3	01101476	0.
1	0444	143	0.	.0	1630.0	*	2	0258	810	0.	6.1	1639.0	*	3	01121477	0.
1	0446	144	0.	.0	1630.0	*	2	0300	811	0.	6.1	1639.0	*	3	01141478	0.
1	0448	145	0.	.0	1630.0	*	2	0302	812	0.	6.1	1639.0	*	3	01161479	0.
1	0450	146	0.	.0	1630.0	*	2	0304	813	0.	6.1	1639.0	*	3	01181480	0.
1	0452	147	0.	.0	1630.0	*	2	0306	814	0.	6.1	1639.0	*	3	01201481	0.
1	0454	148	0.	.0	1630.0	*	2	0308	815	0.	6.1	1639.0	*	3	01221482	0.
1	0456	149	0.	.0	1630.0	*	2	0310	816	0.	6.1	1639.0	*	3	01241483	0.
1	0458	150	0.	.0	1630.0	*	2	0312	817	0.	6.1	1639.0	*	3	01261484	0.
1	0500	151	0.	.0	1630.0	*	2	0314	818	0.	6.1	1639.0	*	3	01281485	0.
1	0502	152	0.	.0	1630.0	*	2	0316	819	0.	6.1	1639.0	*	3	01301486	0.
1	0504	153	0.	.0	1630.0	*	2	0318	820	0.	6.1	1639.0	*	3	01321487	0.
1	0506	154	0.	.0	1630.0	*	2	0320	821	0.	6.1	1639.0	*	3	01341488	0.
1	0508	155	0.	.0	1630.0	*	2	0322	822	0.	6.1	1639.0	*	3	01361489	0.
1	0510	156	0.	.0	1630.0	*	2	0324	823	0.	6.1	1639.0	*	3	01381490	0.
1	0512	157	0.	.0	1630.0	*	2	0326	824	0.	6.1	1639.0	*	3	01401491	0.
1	0514	158	0.	.0	1630.0	*	2	0328	825	0.	6.1	1639.0	*	3	01421492	0.
1	0516	159	0.	.0	1630.0	*	2	0330	826	0.	6.1	1639.0	*	3	01441493	0.
1	0518	160	0.	.0	1630.0	*	2	0332	827	0.	6.1	1639.0	*	3	01461494	0.
1	0520	161	0.	.0	1630.0	*	2	0334	828	0.	6.1	1639.0	*	3	01481495	0.
1	0522	162	0.	.0	1630.0	*	2	0336	829	0.	6.1	1639.0	*	3	01501496	0.
1	0524	163	0.	.0	1630.0	*	2	0338	830	0.	6.1	1639.0	*	3	01521497	0.
	0526	164	0.	.0	1630.0	*	2	0340	831	0.	6.1	1639.0	*	3	01541498	0.
	0528	165	0.	.0	1630.0	*	2	0342	832	0.	6.1	1639.0	*	3	01561499	0.
	0530	166	0.	.0	1630.0	*	2	0344	833	0.	6.1	1639.0	*	3	01581500	0.
1	0532	167	0.	.0	1630.0	*	2	0346	834	0.	6.1	1639.0	*	3	02001501	0.
1	0534	168	0.	.0	1630.0	*	2	0348	835	0.	6.1	1639.0	*	3	02021502	0.
1	0536	169	0.	.0	1630.0	*	2	0350	836	0.	6.1	1639.0	*	3	02041503	0.
1	0538	170	0.	.0	1630.0	*	2	0352	837	0.	6.1	1639.0	*	3	02061504	0.
1	0540	171	0.	.0	1630.0	*	2	0354	838	0.	6.1	1639.0	*	3	02081505	0.
1	0542	172	0.	.0	1630.0	*	2	0356	839	0.	6.1	1639.0	*	3	02101506	0.

1	0544	173	0.	.0	1630.0	*	2	0358	840	0.	6.1	1639.0	*	3	02121507	0.
1	0546	174	0.	.0	1630.0	*	2	0400	841	0.	6.1	1639.0	*	3	02141508	0.
1	0548	175	0.	.0	1630.0	*	2	0402	842	0.	6.1	1639.0	*	3	02161509	0.
1	0550	176	0.	.0	1630.0	*	2	0404	843	0.	6.1	1639.0	*	3	02181510	0.
1	0552	177	0.	.0	1630.0	*	2	0406	844	0.	6.1	1639.0	*	3	02201511	0.
1	0554	178	0.	.0	1630.0	*	2	0408	845	0.	6.1	1639.0	*	3	02221512	0.
1	0556	179	0.	.0	1630.0	*	2	0410	846	0.	6.1	1639.0	*	3	02241513	0.
1	0558	180	0.	.0	1630.0	*	2	0412	847	0.	6.1	1639.0	*	3	02261514	0.
1	0600	181	0.	.0	1630.0	*	2	0414	848	0.	6.1	1639.0	*	3	02281515	0.
1	0602	182	0.	.0	1630.0	*	2	0416	849	0.	6.1	1639.0	*	3	02301516	0.
1	0604	183	0.	.0	1630.0	*	2	0418	850	0.	6.1	1639.0	*	3	02321517	0.
1	0606	184	0.	.0	1630.0	*	2	0420	851	0.	6.1	1639.0	*	3	02341518	0.
1	0608	185	0.	.0	1630.0	*	2	0422	852	0.	6.1	1639.0	*	3	02361519	0.
1	0610	186	0.	.0	1630.0	*	2	0424	853	0.	6.1	1639.0	*	3	02381520	0.
1	0612	187	0.	.0	1630.0	*	2	0426	854	0.	6.1	1639.0	*	3	02401521	0.
1	0614	188	0.	.0	1630.0	*	2	0428	855	0.	6.1	1639.0	*	3	02421522	0.
1	0616	189	0.	.0	1630.0	*	2	0430	856	0.	6.1	1639.0	*	3	02441523	0.
1	0618	190	0.	.0	1630.0	*	2	0432	857	0.	6.1	1639.0	*	3	02461524	0.
1	0620	191	0.	.0	1630.0	*	2	0434	858	0.	6.1	1639.0	*	3	02481525	0.
1	0622	192	0.	.0	1630.0	*	2	0436	859	0.	6.1	1639.0	*	3	02501526	0.
1	0624	193	0.	.0	1630.0	*	2	0438	860	0.	6.1	1639.0	*	3	02521527	0.
1	0626	194	0.	.0	1630.0	*	2	0440	861	0.	6.1	1639.0	*	3	02541528	0.
1	0628	195	0.	.0	1630.0	*	2	0442	862	0.	6.1	1639.0	*	3	02561529	0.
1	0630	196	0.	.0	1630.0	*	2	0444	863	0.	6.1	1639.0	*	3	02581530	0.
1	0632	197	0.	.0	1630.0	*	2	0446	864	0.	6.1	1639.0	*	3	03001531	0.
1	0634	198	0.	.0	1630.0	*	2	0448	865	0.	6.1	1639.0	*	3	03021532	0.
1	0636	199	0.	.0	1630.0	*	2	0450	866	0.	6.1	1639.0	*	3	03041533	0.
1	0638	200	0.	.0	1630.0	*	2	0452	867	0.	6.1	1639.0	*	3	03061534	0.
1	0640	201	0.	.0	1630.0	*	2	0454	868	0.	6.1	1639.0	*	3	03081535	0.
1	0642	202	0.	.0	1630.0	*	2	0456	869	0.	6.1	1639.0	*	3	03101536	0.
1	0644	203	0.	.0	1630.0	*	2	0458	870	0.	6.1	1639.0	*	3	03121537	0.
1	0646	204	0.	.0	1630.0	*	2	0500	871	0.	6.1	1639.0	*	3	03141538	0.
1	0648	205	0.	.0	1630.0	*	2	0502	872	0.	6.1	1639.0	*	3	03161539	0.
1	0650	206	0.	.0	1630.0	*	2	0504	873	0.	6.1	1639.0	*	3	03181540	0.
1	0652	207	0.	.0	1630.0	*	2	0506	874	0.	6.1	1639.0	*	3	03201541	0.
1	0654	208	0.	.0	1630.0	*	2	0508	875	0.	6.1	1639.0	*	3	03221542	0.
1	0656	209	0.	.0	1630.0	*	2	0510	876	0.	6.1	1639.0	*	3	03241543	0.
1	0658	210	0.	.0	1630.0	*	2	0512	877	0.	6.1	1639.0	*	3	03261544	0.
1	0700	211	0.	.0	1630.0	*	2	0514	878	0.	6.1	1639.0	*	3	03281545	0.
1	0702	212	0.	.0	1630.0	*	2	0516	879	0.	6.1	1639.0	*	3	03301546	0.
1	0704	213	0.	.0	1630.0	*	2	0518	880	0.	6.1	1639.0	*	3	03321547	0.
1	0706	214	0.	.0	1630.0	*	2	0520	881	0.	6.1	1639.0	*	3	03341548	0.
1	0708	215	0.	.0	1630.0	*	2	0522	882	0.	6.1	1639.0	*	3	03361549	0.
1	0710	216	0.	.0	1630.0	*	2	0524	883	0.	6.1	1639.0	*	3	03381550	0.
1	0712	217	0.	.0	1630.0	*	2	0526	884	0.	6.1	1639.0	*	3	03401551	0.
1	0714	218	0.	.0	1630.0	*	2	0528	885	0.	6.1	1639.0	*	3	03421552	0.
1	0716	219	0.	.0	1630.0	*	2	0530	886	0.	6.1	1639.0	*	3	03441553	0.
1	0718	220	0.	.0	1630.0	*	2	0532	887	0.	6.1	1639.0	*	3	03461554	0.
1	0720	221	0.	.0	1630.0	*	2	0534	888	0.	6.1	1639.0	*	3	03481555	0.
1	0722	222	0.	.0	1630.0	*	2	0536	889	0.	6.1	1639.0	*	3	03501556	0.
1	0724	223	0.	.0	1630.0	*	2	0538	890	0.	6.1	1639.0	*	3	03521557	0.
1	0726	224	0.	.0	1630.0	*	2	0540	891	0.	6.1	1639.0	*	3	03541558	0.
1	0728	225	0.	.0	1630.0	*	2	0542	892	0.	6.1	1639.0	*	3	03561559	0.
1	0730	226	0.	.0	1630.0	*	2	0544	893	0.	6.1	1639.0	*	3	03581560	0.
1	0732	227	0.	.0	1630.0	*	2	0546	894	0.	6.1	1639.0	*	3	04001561	0.
1	0734	228	0.	.0	1630.0	*	2	0548	895	0.	6.1	1639.0	*	3	04021562	0.
1	0736	229	0.	.0	1630.0	*	2	0550	896	0.	6.1	1639.0	*	3	04041563	0.
1	0738	230	0.	.0	1630.0	*	2	0552	897	0.	6.1	1639.0	*	3	04061564	0.
1	0740	231	0.	.0	1630.0	*	2	0554	898	0.	6.1	1639.0	*	3	04081565	0.
1	0742	232	0.	.0	1630.0	*	2	0556	899	0.	6.1	1639.0	*	3	04101566	0.
1	0744	233	0.	.0	1630.0	*	2	0558	900	0.	6.1	1639.0	*	3	04121567	0.
1	0746	234	0.	.0	1630.0	*	2	0600	901	0.	6.1	1639.0	*	3	04141568	0.
1	0748	235	0.	.0	1630.0	*	2	0602	902	0.	6.1	1639.0	*	3	04161569	0.
1	0750	236	0.	.0	1630.0	*	2	0604	903	0.	6.1	1639.0	*	3	04181570	0.
1	0752	237	0.	.0	1630.0	*	2	0606	904	0.	6.1	1639.0	*	3	04201571	0.
1	0754	238	0.	.0	1630.0	*	2	0608	905	0.	6.1	1639.0	*	3	04221572	0.
1	0756	239	0.	.0	1630.0	*	2	0610	906	0.	6.1	1639.0	*	3	04241573	0.
1	0758	240	0.	.0	1630.0	*	2	0612	907	0.	6.1	1639.0	*	3	04261574	0.
1	0800	241	0.	.0	1630.0	*	2	0614	908	0.	6.1	1639.0	*	3	04281575	0.
1	0802	242	0.	.0	1630.0	*	2	0616	909	0.	6.1	1639.0	*	3	04301576	0.
1	0804	243	0.	.0	1630.0	*	2	0618	910	0.	6.1	1639.0	*	3	04321577	0.
1	0806	244	0.	.0	1630.0	*	2	0620	911	0.	6.1	1639.0	*	3	04341578	0.
1	0808	245	0.	.0	1630.0	*	2	0622	912	0.	6.1	1639.0	*	3	04361579	0.
1	0810	246	0.	.0	1630.0	*	2	0624	913	0.	6.1	1639.0	*	3	04381580	0.
1	0812	247	0.	.0	1630.0	*	2	0626	914	0.	6.1	1639.0	*	3	04401581	0.
1	0814	248	0.	.0	1630.0	*	2	0628	915	0.	6.1	1639.0	*	3	04421582	0.
1	0816	249	0.	.0	1630.0	*	2	0630	916	0.	6.1	1639.0	*	3	04441583	0.
1	0818	250	0.	.0	1630.0	*	2	0632	917	0.	6.1	1639.0	*	3	04461584	0.
1	0820	251	0.	.0	1630.0	*	2	0634	918	0.	6.1	1639.0	*	3	04481585	0.
1	0822	252	0.	.0	1630.0	*	2	0636	919	0.	6.1	1639.0	*	3	04501586	0.
1	0824	253	0.	.0	1630.0	*	2	0638	920	0.	6.1	1639.0	*	3	04521587	0.
1	0826	254	0.	.0	1630.0	*	2	0640	921	0.	6.1	1639.0	*	3	04541588	0.
1	0828	255	0.	.0	1630.0	*	2	0642	922	0.	6.1	1639.0	*	3	04561589	0.
1	0830	256	0.	.0	1630.0	*	2	0644	923	0.	6.1	1639.0	*	3	04581590	0.

1	0832	257	0.	.0	1630.0	*	2	0646	924	0.	6.1	1639.0	*	3	05001591	0.
1	0834	258	0.	.0	1630.0	*	2	0648	925	0.	6.1	1639.0	*	3	05021592	0.
1	0836	259	0.	.0	1630.0	*	2	0650	926	0.	6.1	1639.0	*	3	05041593	0.
1	0838	260	0.	.0	1630.0	*	2	0652	927	0.	6.1	1639.0	*	3	05061594	0.
	0840	261	0.	.0	1630.0	*	2	0654	928	0.	6.1	1639.0	*	3	05081595	0.
	0842	262	0.	.0	1630.0	*	2	0656	929	0.	6.1	1639.0	*	3	05101596	0.
1	0844	263	0.	.0	1630.0	*	2	0658	930	0.	6.1	1639.0	*	3	05121597	0.
1	0846	264	0.	.0	1630.0	*	2	0700	931	0.	6.1	1639.0	*	3	05141598	0.
1	0848	265	0.	.0	1630.0	*	2	0702	932	0.	6.1	1639.0	*	3	05161599	0.
1	0850	266	0.	.0	1630.0	*	2	0704	933	0.	6.1	1639.0	*	3	05181600	0.
1	0852	267	0.	.0	1630.0	*	2	0706	934	0.	6.1	1639.0	*	3	05201601	0.
1	0854	268	0.	.0	1630.0	*	2	0708	935	0.	6.1	1639.0	*	3	05221602	0.
1	0856	269	0.	.0	1630.0	*	2	0710	936	0.	6.1	1639.0	*	3	05241603	0.
1	0858	270	0.	.0	1630.0	*	2	0712	937	0.	6.1	1639.0	*	3	05261604	0.
1	0900	271	0.	.0	1630.0	*	2	0714	938	0.	6.1	1639.0	*	3	05281605	0.
1	0902	272	0.	.0	1630.0	*	2	0716	939	0.	6.1	1639.0	*	3	05301606	0.
1	0904	273	0.	.0	1630.0	*	2	0718	940	0.	6.1	1639.0	*	3	05321607	0.
1	0906	274	0.	.0	1630.0	*	2	0720	941	0.	6.1	1639.0	*	3	05341608	0.
1	0908	275	0.	.0	1630.0	*	2	0722	942	0.	6.1	1639.0	*	3	05361609	0.
1	0910	276	0.	.0	1630.0	*	2	0724	943	0.	6.1	1639.0	*	3	05381610	0.
1	0912	277	0.	.0	1630.0	*	2	0726	944	0.	6.1	1639.0	*	3	05401611	0.
1	0914	278	0.	.0	1630.0	*	2	0728	945	0.	6.1	1639.0	*	3	05421612	0.
1	0916	279	0.	.0	1630.0	*	2	0730	946	0.	6.1	1639.0	*	3	05441613	0.
1	0918	280	0.	.0	1630.0	*	2	0732	947	0.	6.1	1639.0	*	3	05461614	0.
1	0920	281	0.	.0	1630.0	*	2	0734	948	0.	6.1	1639.0	*	3	05481615	0.
1	0922	282	0.	.0	1630.0	*	2	0736	949	0.	6.1	1639.0	*	3	05501616	0.
1	0924	283	0.	.0	1630.0	*	2	0738	950	0.	6.1	1639.0	*	3	05521617	0.
1	0926	284	0.	.0	1630.0	*	2	0740	951	0.	6.1	1639.0	*	3	05541618	0.
1	0928	285	0.	.0	1630.0	*	2	0742	952	0.	6.1	1639.0	*	3	05561619	0.
1	0930	286	0.	.0	1630.0	*	2	0744	953	0.	6.1	1639.0	*	3	05581620	0.
1	0932	287	0.	.0	1630.0	*	2	0746	954	0.	6.1	1639.0	*	3	06001621	0.
1	0934	288	0.	.0	1630.0	*	2	0748	955	0.	6.1	1639.0	*	3	06021622	0.
1	0936	289	0.	.0	1630.0	*	2	0750	956	0.	6.1	1639.0	*	3	06041623	0.
1	0938	290	0.	.0	1630.0	*	2	0752	957	0.	6.1	1639.0	*	3	06061624	0.
1	0940	291	0.	.0	1630.0	*	2	0754	958	0.	6.1	1639.0	*	3	06081625	0.
1	0942	292	0.	.0	1630.0	*	2	0756	959	0.	6.1	1639.0	*	3	06101626	0.
1	0944	293	0.	.0	1630.0	*	2	0758	960	0.	6.1	1639.0	*	3	06121627	0.
1	0946	294	0.	.0	1630.0	*	2	0800	961	0.	6.1	1639.0	*	3	06141628	0.
1	0948	295	0.	.0	1630.0	*	2	0802	962	0.	6.1	1639.0	*	3	06161629	0.
1	0950	296	0.	.0	1630.0	*	2	0804	963	0.	6.1	1639.0	*	3	06181630	0.
	0952	297	0.	.0	1630.0	*	2	0806	964	0.	6.1	1639.0	*	3	06201631	0.
	0954	298	0.	.0	1630.0	*	2	0808	965	0.	6.1	1639.0	*	3	06221632	0.
1	0956	299	0.	.0	1630.0	*	2	0810	966	0.	6.1	1639.0	*	3	06241633	0.
1	0958	300	0.	.0	1630.0	*	2	0812	967	0.	6.1	1639.0	*	3	06261634	0.
1	1000	301	0.	.0	1630.0	*	2	0814	968	0.	6.1	1639.0	*	3	06281635	0.
1	1002	302	0.	.0	1630.0	*	2	0816	969	0.	6.1	1639.0	*	3	06301636	0.
1	1004	303	0.	.0	1630.0	*	2	0818	970	0.	6.1	1639.0	*	3	06321637	0.
1	1006	304	0.	.0	1630.0	*	2	0820	971	0.	6.1	1639.0	*	3	06341638	0.
1	1008	305	0.	.0	1630.0	*	2	0822	972	0.	6.1	1639.0	*	3	06361639	0.
1	1010	306	0.	.0	1630.0	*	2	0824	973	0.	6.1	1639.0	*	3	06381640	0.
1	1012	307	0.	.0	1630.0	*	2	0826	974	0.	6.1	1639.0	*	3	06401641	0.
1	1014	308	0.	.0	1630.0	*	2	0828	975	0.	6.1	1639.0	*	3	06421642	0.
1	1016	309	0.	.0	1630.0	*	2	0830	976	0.	6.1	1639.0	*	3	06441643	0.
1	1018	310	0.	.0	1630.0	*	2	0832	977	0.	6.1	1639.0	*	3	06461644	0.
1	1020	311	0.	.0	1630.0	*	2	0834	978	0.	6.1	1639.0	*	3	06481645	0.
1	1022	312	0.	.0	1630.0	*	2	0836	979	0.	6.1	1639.0	*	3	06501646	0.
1	1024	313	0.	.0	1630.0	*	2	0838	980	0.	6.1	1639.0	*	3	06521647	0.
1	1026	314	0.	.0	1630.0	*	2	0840	981	0.	6.1	1639.0	*	3	06541648	0.
1	1028	315	0.	.0	1630.0	*	2	0842	982	0.	6.1	1639.0	*	3	06561649	0.
1	1030	316	0.	.0	1630.0	*	2	0844	983	0.	6.1	1639.0	*	3	06581650	0.
1	1032	317	0.	.0	1630.0	*	2	0846	984	0.	6.1	1639.0	*	3	07001651	0.
1	1034	318	0.	.0	1630.0	*	2	0848	985	0.	6.1	1639.0	*	3	07021652	0.
1	1036	319	0.	.0	1630.0	*	2	0850	986	0.	6.1	1639.0	*	3	07041653	0.
1	1038	320	0.	.0	1630.0	*	2	0852	987	0.	6.1	1639.0	*	3	07061654	0.
1	1040	321	0.	.0	1630.0	*	2	0854	988	0.	6.1	1639.0	*	3	07081655	0.
1	1042	322	0.	.0	1630.0	*	2	0856	989	0.	6.1	1639.0	*	3	07101656	0.
1	1044	323	0.	.0	1630.0	*	2	0858	990	0.	6.1	1639.0	*	3	07121657	0.
1	1046	324	0.	.0	1630.0	*	2	0900	991	0.	6.1	1639.0	*	3	07141658	0.
1	1048	325	0.	.0	1630.0	*	2	0902	992	0.	6.1	1639.0	*	3	07161659	0.
1	1050	326	0.	.0	1630.0	*	2	0904	993	0.	6.1	1639.0	*	3	07181660	0.
1	1052	327	0.	.0	1630.0	*	2	0906	994	0.	6.1	1639.0	*	3	07201661	0.
1	1054	328	0.	.0	1630.0	*	2	0908	995	0.	6.1	1639.0	*	3	07221662	0.
1	1056	329	0.	.0	1630.0	*	2	0910	996	0.	6.1	1639.0	*	3	07241663	0.
1	1058	330	0.	.0	1630.0	*	2	0912	997	0.	6.1	1639.0	*	3	07261664	0.
1	1100	331	0.	.0	1630.0	*	2	0914	998	0.	6.1	1639.0	*	3	07281665	0.
	1102	332	0.	.0	1630.0	*	2	0916	999	0.	6.1	1639.0	*	3	07301666	0.
	1104	333	0.	.0	1630.0	*	2	09181000		0.	6.1	1639.0	*	3	07321667	0.
	1106	334	0.	.0	1630.0	*	2	09201001		0.	6.1	1639.0	*	3	07341668	0.
1	1108	335	0.	.0	1630.0	*	2	09221002		0.	6.1	1639.0	*	3	07361669	0.
1	1110	336	0.	.0	1630.0	*	2	09241003		0.	6.1	1639.0	*	3	07381670	0.
1	1112	337	0.	.0	1630.0	*	2	09261004		0.	6.1	1639.0	*	3	07401671	0.
1	1114	338	0.	.0	1630.0	*	2	09281005		0.	6.1	1639.0	*	3	07421672	0.
1	1116	339	0.	.0	1630.0	*	2	09301006		0.	6.1	1639.0	*	3	07441673	0.
1	1118	340	0.	.0	1630.0	*	2	09321007		0.	6.1	1639.0	*	3	07461674	0.

1	1120	341	0.	.0	1630.0	*	2	09341008	0.	6.1	1639.0	*	3	07481675	0.
1	1122	342	0.	.0	1630.0	*	2	09361009	0.	6.1	1639.0	*	3	07501676	0.
1	1124	343	0.	.0	1630.0	*	2	09381010	0.	6.1	1639.0	*	3	07521677	0.
1	1126	344	0.	.0	1630.0	*	2	09401011	0.	6.1	1639.0	*	3	07541678	0.
1	1128	345	0.	.0	1630.0	*	2	09421012	0.	6.1	1639.0	*	3	07561679	0.
1	1130	346	0.	.0	1630.0	*	2	09441013	0.	6.1	1639.0	*	3	07581680	0.
1	1132	347	0.	.0	1630.0	*	2	09461014	0.	6.1	1639.0	*	3	08001681	0.
1	1134	348	0.	.0	1630.0	*	2	09481015	0.	6.1	1639.0	*	3	08021682	0.
1	1136	349	0.	.0	1630.0	*	2	09501016	0.	6.1	1639.0	*	3	08041683	0.
1	1138	350	0.	.0	1630.0	*	2	09521017	0.	6.1	1639.0	*	3	08061684	0.
1	1140	351	0.	.0	1630.0	*	2	09541018	0.	6.1	1639.0	*	3	08081685	0.
1	1142	352	0.	.0	1630.0	*	2	09561019	0.	6.1	1639.0	*	3	08101686	0.
1	1144	353	0.	.0	1630.0	*	2	09581020	0.	6.1	1639.0	*	3	08121687	0.
1	1146	354	0.	.0	1630.0	*	2	10001021	0.	6.1	1639.0	*	3	08141688	0.
1	1148	355	0.	.0	1630.0	*	2	10021022	0.	6.1	1639.0	*	3	08161689	0.
1	1150	356	0.	.0	1630.0	*	2	10041023	0.	6.1	1639.0	*	3	08181690	0.
1	1152	357	0.	.0	1630.1	*	2	10061024	0.	6.1	1639.0	*	3	08201691	0.
1	1154	358	0.	.1	1630.7	*	2	10081025	0.	6.1	1639.0	*	3	08221692	0.
1	1156	359	0.	.3	1631.5	*	2	10101026	0.	6.1	1639.0	*	3	08241693	0.
1	1158	360	0.	.6	1632.3	*	2	10121027	0.	6.1	1639.0	*	3	08261694	0.
1	1200	361	0.	1.1	1633.2	*	2	10141028	0.	6.1	1639.0	*	3	08281695	0.
1	1202	362	0.	1.6	1634.2	*	2	10161029	0.	6.1	1639.0	*	3	08301696	0.
1	1204	363	0.	2.2	1635.1	*	2	10181030	0.	6.1	1639.0	*	3	08321697	0.
1	1206	364	0.	2.8	1635.9	*	2	10201031	0.	6.1	1639.0	*	3	08341698	0.
1	1208	365	0.	3.5	1636.7	*	2	10221032	0.	6.1	1639.0	*	3	08361699	0.
1	1210	366	0.	4.4	1637.5	*	2	10241033	0.	6.1	1639.0	*	3	08381700	0.
1	1212	367	0.	5.2	1638.3	*	2	10261034	0.	6.1	1639.0	*	3	08401701	0.
1	1214	368	0.	6.0	1638.9	*	2	10281035	0.	6.1	1639.0	*	3	08421702	0.
1	1216	369	12.	6.8	1639.5	*	2	10301036	0.	6.1	1639.0	*	3	08441703	0.
1	1218	370	25.	7.5	1640.0	*	2	10321037	0.	6.1	1639.0	*	3	08461704	0.
1	1220	371	90.	8.0	1640.3	*	2	10341038	0.	6.1	1639.0	*	3	08481705	0.
1	1222	372	130.	8.3	1640.5	*	2	10361039	0.	6.1	1639.0	*	3	08501706	0.
1	1224	373	152.	8.5	1640.6	*	2	10381040	0.	6.1	1639.0	*	3	08521707	0.
1	1226	374	162.	8.6	1640.7	*	2	10401041	0.	6.1	1639.0	*	3	08541708	0.
1	1228	375	164.	8.6	1640.7	*	2	10421042	0.	6.1	1639.0	*	3	08561709	0.
1	1230	376	161.	8.6	1640.7	*	2	10441043	0.	6.1	1639.0	*	3	08581710	0.
1	1232	377	154.	8.5	1640.6	*	2	10461044	0.	6.1	1639.0	*	3	09001711	0.
1	1234	378	143.	8.4	1640.6	*	2	10481045	0.	6.1	1639.0	*	3	09021712	0.
1	1236	379	127.	8.3	1640.5	*	2	10501046	0.	6.1	1639.0	*	3	09041713	0.
1	1238	380	105.	8.1	1640.4	*	2	10521047	0.	6.1	1639.0	*	3	09061714	0.
1	1240	381	79.	7.9	1640.3	*	2	10541048	0.	6.1	1639.0	*	3	09081715	0.
1	1242	382	58.	7.8	1640.2	*	2	10561049	0.	6.1	1639.0	*	3	09101716	0.
1	1244	383	44.	7.6	1640.1	*	2	10581050	0.	6.1	1639.0	*	3	09121717	0.
1	1246	384	32.	7.5	1640.0	*	2	11001051	0.	6.1	1639.0	*	3	09141718	0.
1	1248	385	25.	7.5	1640.0	*	2	11021052	0.	6.1	1639.0	*	3	09161719	0.
1	1250	386	24.	7.4	1639.9	*	2	11041053	0.	6.1	1639.0	*	3	09181720	0.
1	1252	387	22.	7.3	1639.9	*	2	11061054	0.	6.1	1639.0	*	3	09201721	0.
1	1254	388	21.	7.3	1639.9	*	2	11081055	0.	6.1	1639.0	*	3	09221722	0.
1	1256	389	20.	7.2	1639.8	*	2	11101056	0.	6.1	1639.0	*	3	09241723	0.
1	1258	390	19.	7.2	1639.8	*	2	11121057	0.	6.1	1639.0	*	3	09261724	0.
1	1300	391	18.	7.1	1639.7	*	2	11141058	0.	6.1	1639.0	*	3	09281725	0.
1	1302	392	17.	7.1	1639.7	*	2	11161059	0.	6.1	1639.0	*	3	09301726	0.
1	1304	393	17.	7.0	1639.7	*	2	11181060	0.	6.1	1639.0	*	3	09321727	0.
1	1306	394	16.	7.0	1639.6	*	2	11201061	0.	6.1	1639.0	*	3	09341728	0.
1	1308	395	15.	6.9	1639.6	*	2	11221062	0.	6.1	1639.0	*	3	09361729	0.
1	1310	396	14.	6.9	1639.6	*	2	11241063	0.	6.1	1639.0	*	3	09381730	0.
1	1312	397	14.	6.9	1639.5	*	2	11261064	0.	6.1	1639.0	*	3	09401731	0.
1	1314	398	13.	6.8	1639.5	*	2	11281065	0.	6.1	1639.0	*	3	09421732	0.
1	1316	399	12.	6.8	1639.5	*	2	11301066	0.	6.1	1639.0	*	3	09441733	0.
1	1318	400	12.	6.8	1639.5	*	2	11321067	0.	6.1	1639.0	*	3	09461734	0.
1	1320	401	11.	6.7	1639.4	*	2	11341068	0.	6.1	1639.0	*	3	09481735	0.
1	1322	402	11.	6.7	1639.4	*	2	11361069	0.	6.1	1639.0	*	3	09501736	0.
1	1324	403	10.	6.7	1639.4	*	2	11381070	0.	6.1	1639.0	*	3	09521737	0.
1	1326	404	10.	6.6	1639.4	*	2	11401071	0.	6.1	1639.0	*	3	09541738	0.
1	1328	405	9.	6.6	1639.4	*	2	11421072	0.	6.1	1639.0	*	3	09561739	0.
1	1330	406	9.	6.6	1639.3	*	2	11441073	0.	6.1	1639.0	*	3	09581740	0.
1	1332	407	8.	6.6	1639.3	*	2	11461074	0.	6.1	1639.0	*	3	10001741	0.
1	1334	408	8.	6.5	1639.3	*	2	11481075	0.	6.1	1639.0	*	3	10021742	0.
1	1336	409	8.	6.5	1639.3	*	2	11501076	0.	6.1	1639.0	*	3	10041743	0.
1	1338	410	7.	6.5	1639.3	*	2	11521077	0.	6.1	1639.0	*	3	10061744	0.
1	1340	411	7.	6.5	1639.3	*	2	11541078	0.	6.1	1639.0	*	3	10081745	0.
1	1342	412	6.	6.5	1639.3	*	2	11561079	0.	6.1	1639.0	*	3	10101746	0.
1	1344	413	6.	6.4	1639.2	*	2	11581080	0.	6.1	1639.0	*	3	10121747	0.
1	1346	414	6.	6.4	1639.2	*	2	12001081	0.	6.1	1639.0	*	3	10141748	0.
1	1348	415	6.	6.4	1639.2	*	2	12021082	0.	6.1	1639.0	*	3	10161749	0.
1	1350	416	5.	6.4	1639.2	*	2	12041083	0.	6.1	1639.0	*	3	10181750	0.
1	1352	417	5.	6.4	1639.2	*	2	12061084	0.	6.1	1639.0	*	3	10201751	0.
1	1354	418	5.	6.4	1639.2	*	2	12081085	0.	6.1	1639.0	*	3	10221752	0.
1	1356	419	5.	6.4	1639.2	*	2	12101086	0.	6.1	1639.0	*	3	10241753	0.
1	1358	420	4.	6.3	1639.2	*	2	12121087	0.	6.1	1639.0	*	3	10261754	0.
1	1400	421	4.	6.3	1639.2	*	2	12141088	0.	6.1	1639.0	*	3	10281755	0.
1	1402	422	4.	6.3	1639.2	*	2	12161089	0.	6.1	1639.0	*	3	10301756	0.
1	1404	423	4.	6.3	1639.2	*	2	12181090	0.	6.1	1639.0	*	3	10321757	0.
1	1406	424	4.	6.3	1639.1	*	2	12201091	0.	6.1	1639.0	*	3	10341758	0.

1	1408	425	3.	6.3	1639.1	*	2	12221092	0.	6.1	1639.0	*	3	10361759	0.
1	1410	426	3.	6.3	1639.1	*	2	12241093	0.	6.1	1639.0	*	3	10381760	0.
1	1412	427	3.	6.3	1639.1	*	2	12261094	0.	6.1	1639.0	*	3	10401761	0.
1	1414	428	3.	6.3	1639.1	*	2	12281095	0.	6.1	1639.0	*	3	10421762	0.
1	1416	429	3.	6.3	1639.1	*	2	12301096	0.	6.1	1639.0	*	3	10441763	0.
1	1418	430	3.	6.2	1639.1	*	2	12321097	0.	6.1	1639.0	*	3	10461764	0.
1	1420	431	3.	6.2	1639.1	*	2	12341098	0.	6.1	1639.0	*	3	10481765	0.
1	1422	432	2.	6.2	1639.1	*	2	12361099	0.	6.1	1639.0	*	3	10501766	0.
1	1424	433	2.	6.2	1639.1	*	2	12381100	0.	6.1	1639.0	*	3	10521767	0.
1	1426	434	2.	6.2	1639.1	*	2	12401101	0.	6.1	1639.0	*	3	10541768	0.
1	1428	435	2.	6.2	1639.1	*	2	12421102	0.	6.1	1639.0	*	3	10561769	0.
1	1430	436	2.	6.2	1639.1	*	2	12441103	0.	6.1	1639.0	*	3	10581770	0.
1	1432	437	2.	6.2	1639.1	*	2	12461104	0.	6.1	1639.0	*	3	11001771	0.
1	1434	438	2.	6.2	1639.1	*	2	12481105	0.	6.1	1639.0	*	3	11021772	0.
1	1436	439	2.	6.2	1639.1	*	2	12501106	0.	6.1	1639.0	*	3	11041773	0.
1	1438	440	2.	6.2	1639.1	*	2	12521107	0.	6.1	1639.0	*	3	11061774	0.
1	1440	441	2.	6.2	1639.1	*	2	12541108	0.	6.1	1639.0	*	3	11081775	0.
1	1442	442	1.	6.2	1639.1	*	2	12561109	0.	6.1	1639.0	*	3	11101776	0.
1	1444	443	1.	6.2	1639.1	*	2	12581110	0.	6.1	1639.0	*	3	11121777	0.
1	1446	444	1.	6.2	1639.1	*	2	13001111	0.	6.1	1639.0	*	3	11141778	0.
1	1448	445	1.	6.2	1639.1	*	2	13021112	0.	6.1	1639.0	*	3	11161779	0.
1	1450	446	1.	6.2	1639.0	*	2	13041113	0.	6.1	1639.0	*	3	11181780	0.
1	1452	447	1.	6.2	1639.0	*	2	13061114	0.	6.1	1639.0	*	3	11201781	0.
1	1454	448	1.	6.2	1639.0	*	2	13081115	0.	6.1	1639.0	*	3	11221782	0.
1	1456	449	1.	6.2	1639.0	*	2	13101116	0.	6.1	1639.0	*	3	11241783	0.
1	1458	450	1.	6.2	1639.0	*	2	13121117	0.	6.1	1639.0	*	3	11261784	0.
1	1500	451	1.	6.2	1639.0	*	2	13141118	0.	6.1	1639.0	*	3	11281785	0.
1	1502	452	1.	6.1	1639.0	*	2	13161119	0.	6.1	1639.0	*	3	11301786	0.
1	1504	453	1.	6.1	1639.0	*	2	13181120	0.	6.1	1639.0	*	3	11321787	0.
1	1506	454	1.	6.1	1639.0	*	2	13201121	0.	6.1	1639.0	*	3	11341788	0.
1	1508	455	1.	6.1	1639.0	*	2	13221122	0.	6.1	1639.0	*	3	11361789	0.
1	1510	456	1.	6.1	1639.0	*	2	13241123	0.	6.1	1639.0	*	3	11381790	0.
1	1512	457	1.	6.1	1639.0	*	2	13261124	0.	6.1	1639.0	*	3	11401791	0.
1	1514	458	1.	6.1	1639.0	*	2	13281125	0.	6.1	1639.0	*	3	11421792	0.
1	1516	459	1.	6.1	1639.0	*	2	13301126	0.	6.1	1639.0	*	3	11441793	0.
1	1518	460	1.	6.1	1639.0	*	2	13321127	0.	6.1	1639.0	*	3	11461794	0.
1	1520	461	1.	6.1	1639.0	*	2	13341128	0.	6.1	1639.0	*	3	11481795	0.
1	1522	462	1.	6.1	1639.0	*	2	13361129	0.	6.1	1639.0	*	3	11501796	0.
1	1524	463	1.	6.1	1639.0	*	2	13381130	0.	6.1	1639.0	*	3	11521797	0.
1	1526	464	0.	6.1	1639.0	*	2	13401131	0.	6.1	1639.0	*	3	11541798	0.
1	1528	465	0.	6.1	1639.0	*	2	13421132	0.	6.1	1639.0	*	3	11561799	0.
1	1530	466	0.	6.1	1639.0	*	2	13441133	0.	6.1	1639.0	*	3	11581800	0.
1	1532	467	0.	6.1	1639.0	*	2	13461134	0.	6.1	1639.0	*	3	12001801	0.
1	1534	468	0.	6.1	1639.0	*	2	13481135	0.	6.1	1639.0	*	3	12021802	0.
1	1536	469	0.	6.1	1639.0	*	2	13501136	0.	6.1	1639.0	*	3	12041803	0.
1	1538	470	0.	6.1	1639.0	*	2	13521137	0.	6.1	1639.0	*	3	12061804	0.
1	1540	471	0.	6.1	1639.0	*	2	13541138	0.	6.1	1639.0	*	3	12081805	0.
1	1542	472	0.	6.1	1639.0	*	2	13561139	0.	6.1	1639.0	*	3	12101806	0.
1	1544	473	0.	6.1	1639.0	*	2	13581140	0.	6.1	1639.0	*	3	12121807	0.
1	1546	474	0.	6.1	1639.0	*	2	14001141	0.	6.1	1639.0	*	3	12141808	0.
1	1548	475	0.	6.1	1639.0	*	2	14021142	0.	6.1	1639.0	*	3	12161809	0.
1	1550	476	0.	6.1	1639.0	*	2	14041143	0.	6.1	1639.0	*	3	12181810	0.
1	1552	477	0.	6.1	1639.0	*	2	14061144	0.	6.1	1639.0	*	3	12201811	0.
1	1554	478	0.	6.1	1639.0	*	2	14081145	0.	6.1	1639.0	*	3	12221812	0.
1	1556	479	0.	6.1	1639.0	*	2	14101146	0.	6.1	1639.0	*	3	12241813	0.
1	1558	480	0.	6.1	1639.0	*	2	14121147	0.	6.1	1639.0	*	3	12261814	0.
1	1600	481	0.	6.1	1639.0	*	2	14141148	0.	6.1	1639.0	*	3	12281815	0.
1	1602	482	0.	6.1	1639.0	*	2	14161149	0.	6.1	1639.0	*	3	12301816	0.
1	1604	483	0.	6.1	1639.0	*	2	14181150	0.	6.1	1639.0	*	3	12321817	0.
1	1606	484	0.	6.1	1639.0	*	2	14201151	0.	6.1	1639.0	*	3	12341818	0.
1	1608	485	0.	6.1	1639.0	*	2	14221152	0.	6.1	1639.0	*	3	12361819	0.
1	1610	486	0.	6.1	1639.0	*	2	14241153	0.	6.1	1639.0	*	3	12381820	0.
1	1612	487	0.	6.1	1639.0	*	2	14261154	0.	6.1	1639.0	*	3	12401821	0.
1	1614	488	0.	6.1	1639.0	*	2	14281155	0.	6.1	1639.0	*	3	12421822	0.
1	1616	489	0.	6.1	1639.0	*	2	14301156	0.	6.1	1639.0	*	3	12441823	0.
1	1618	490	0.	6.1	1639.0	*	2	14321157	0.	6.1	1639.0	*	3	12461824	0.
1	1620	491	0.	6.1	1639.0	*	2	14341158	0.	6.1	1639.0	*	3	12481825	0.
1	1622	492	0.	6.1	1639.0	*	2	14361159	0.	6.1	1639.0	*	3	12501826	0.
1	1624	493	0.	6.1	1639.0	*	2	14381160	0.	6.1	1639.0	*	3	12521827	0.
1	1626	494	0.	6.1	1639.0	*	2	14401161	0.	6.1	1639.0	*	3	12541828	0.
1	1628	495	0.	6.1	1639.0	*	2	14421162	0.	6.1	1639.0	*	3	12561829	0.
1	1630	496	0.	6.1	1639.0	*	2	14441163	0.	6.1	1639.0	*	3	12581830	0.
1	1632	497	0.	6.1	1639.0	*	2	14461164	0.	6.1	1639.0	*	3	13001831	0.
1	1634	498	0.	6.1	1639.0	*	2	14481165	0.	6.1	1639.0	*	3	13021832	0.
1	1636	499	0.	6.1	1639.0	*	2	14501166	0.	6.1	1639.0	*	3	13041833	0.
1	1638	500	0.	6.1	1639.0	*	2	14521167	0.	6.1	1639.0	*	3	13061834	0.
1	1640	501	0.	6.1	1639.0	*	2	14541168	0.	6.1	1639.0	*	3	13081835	0.
1	1642	502	0.	6.1	1639.0	*	2	14561169	0.	6.1	1639.0	*	3	13101836	0.
1	1644	503	0.	6.1	1639.0	*	2	14581170	0.	6.1	1639.0	*	3	13121837	0.
1	1646	504	0.	6.1	1639.0	*	2	15001171	0.	6.1	1639.0	*	3	13141838	0.
1	1648	505	0.	6.1	1639.0	*	2	15021172	0.	6.1	1639.0	*	3	13161839	0.
1	1650	506	0.	6.1	1639.0	*	2	15041173	0.	6.1	1639.0	*	3	13181840	0.
1	1652	507	0.	6.1	1639.0	*	2	15061174	0.	6.1	1639.0	*	3	13201841	0.
1	1654	508	0.	6.1	1639.0	*	2	15081175	0.	6.1	1639.0	*	3	13221842	0.

1	1656	509	0.	6.1	1639.0	*	2	15101176	0.	6.1	1639.0	*	3	13241843	0.
1	1658	510	0.	6.1	1639.0	*	2	15121177	0.	6.1	1639.0	*	3	13261844	0.
1	1700	511	0.	6.1	1639.0	*	2	15141178	0.	6.1	1639.0	*	3	13281845	0.
1	1702	512	0.	6.1	1639.0	*	2	15161179	0.	6.1	1639.0	*	3	13301846	0.
1	1704	513	0.	6.1	1639.0	*	2	15181180	0.	6.1	1639.0	*	3	13321847	0.
1	1706	514	0.	6.1	1639.0	*	2	15201181	0.	6.1	1639.0	*	3	13341848	0.
1	1708	515	0.	6.1	1639.0	*	2	15221182	0.	6.1	1639.0	*	3	13361849	0.
1	1710	516	0.	6.1	1639.0	*	2	15241183	0.	6.1	1639.0	*	3	13381850	0.
1	1712	517	0.	6.1	1639.0	*	2	15261184	0.	6.1	1639.0	*	3	13401851	0.
1	1714	518	0.	6.1	1639.0	*	2	15281185	0.	6.1	1639.0	*	3	13421852	0.
1	1716	519	0.	6.1	1639.0	*	2	15301186	0.	6.1	1639.0	*	3	13441853	0.
1	1718	520	0.	6.1	1639.0	*	2	15321187	0.	6.1	1639.0	*	3	13461854	0.
1	1720	521	0.	6.1	1639.0	*	2	15341188	0.	6.1	1639.0	*	3	13481855	0.
1	1722	522	0.	6.1	1639.0	*	2	15361189	0.	6.1	1639.0	*	3	13501856	0.
1	1724	523	0.	6.1	1639.0	*	2	15381190	0.	6.1	1639.0	*	3	13521857	0.
1	1726	524	0.	6.1	1639.0	*	2	15401191	0.	6.1	1639.0	*	3	13541858	0.
1	1728	525	0.	6.1	1639.0	*	2	15421192	0.	6.1	1639.0	*	3	13561859	0.
1	1730	526	0.	6.1	1639.0	*	2	15441193	0.	6.1	1639.0	*	3	13581860	0.
1	1732	527	0.	6.1	1639.0	*	2	15461194	0.	6.1	1639.0	*	3	14001861	0.
1	1734	528	0.	6.1	1639.0	*	2	15481195	0.	6.1	1639.0	*	3	14021862	0.
1	1736	529	0.	6.1	1639.0	*	2	15501196	0.	6.1	1639.0	*	3	14041863	0.
1	1738	530	0.	6.1	1639.0	*	2	15521197	0.	6.1	1639.0	*	3	14061864	0.
1	1740	531	0.	6.1	1639.0	*	2	15541198	0.	6.1	1639.0	*	3	14081865	0.
1	1742	532	0.	6.1	1639.0	*	2	15561199	0.	6.1	1639.0	*	3	14101866	0.
1	1744	533	0.	6.1	1639.0	*	2	15581200	0.	6.1	1639.0	*	3	14121867	0.
1	1746	534	0.	6.1	1639.0	*	2	16001201	0.	6.1	1639.0	*	3	14141868	0.
1	1748	535	0.	6.1	1639.0	*	2	16021202	0.	6.1	1639.0	*	3	14161869	0.
1	1750	536	0.	6.1	1639.0	*	2	16041203	0.	6.1	1639.0	*	3	14181870	0.
1	1752	537	0.	6.1	1639.0	*	2	16061204	0.	6.1	1639.0	*	3	14201871	0.
1	1754	538	0.	6.1	1639.0	*	2	16081205	0.	6.1	1639.0	*	3	14221872	0.
1	1756	539	0.	6.1	1639.0	*	2	16101206	0.	6.1	1639.0	*	3	14241873	0.
1	1758	540	0.	6.1	1639.0	*	2	16121207	0.	6.1	1639.0	*	3	14261874	0.
1	1800	541	0.	6.1	1639.0	*	2	16141208	0.	6.1	1639.0	*	3	14281875	0.
1	1802	542	0.	6.1	1639.0	*	2	16161209	0.	6.1	1639.0	*	3	14301876	0.
1	1804	543	0.	6.1	1639.0	*	2	16181210	0.	6.1	1639.0	*	3	14321877	0.
1	1806	544	0.	6.1	1639.0	*	2	16201211	0.	6.1	1639.0	*	3	14341878	0.
1	1808	545	0.	6.1	1639.0	*	2	16221212	0.	6.1	1639.0	*	3	14361879	0.
1	1810	546	0.	6.1	1639.0	*	2	16241213	0.	6.1	1639.0	*	3	14381880	0.
1	1812	547	0.	6.1	1639.0	*	2	16261214	0.	6.1	1639.0	*	3	14401881	0.
1	1814	548	0.	6.1	1639.0	*	2	16281215	0.	6.1	1639.0	*	3	14421882	0.
1	1816	549	0.	6.1	1639.0	*	2	16301216	0.	6.1	1639.0	*	3	14441883	0.
1	1818	550	0.	6.1	1639.0	*	2	16321217	0.	6.1	1639.0	*	3	14461884	0.
1	1820	551	0.	6.1	1639.0	*	2	16341218	0.	6.1	1639.0	*	3	14481885	0.
1	1822	552	0.	6.1	1639.0	*	2	16361219	0.	6.1	1639.0	*	3	14501886	0.
1	1824	553	0.	6.1	1639.0	*	2	16381220	0.	6.1	1639.0	*	3	14521887	0.
1	1826	554	0.	6.1	1639.0	*	2	16401221	0.	6.1	1639.0	*	3	14541888	0.
1	1828	555	0.	6.1	1639.0	*	2	16421222	0.	6.1	1639.0	*	3	14561889	0.
1	1830	556	0.	6.1	1639.0	*	2	16441223	0.	6.1	1639.0	*	3	14581890	0.
1	1832	557	0.	6.1	1639.0	*	2	16461224	0.	6.1	1639.0	*	3	15001891	0.
1	1834	558	0.	6.1	1639.0	*	2	16481225	0.	6.1	1639.0	*	3	15021892	0.
1	1836	559	0.	6.1	1639.0	*	2	16501226	0.	6.1	1639.0	*	3	15041893	0.
1	1838	560	0.	6.1	1639.0	*	2	16521227	0.	6.1	1639.0	*	3	15061894	0.
1	1840	561	0.	6.1	1639.0	*	2	16541228	0.	6.1	1639.0	*	3	15081895	0.
1	1842	562	0.	6.1	1639.0	*	2	16561229	0.	6.1	1639.0	*	3	15101896	0.
1	1844	563	0.	6.1	1639.0	*	2	16581230	0.	6.1	1639.0	*	3	15121897	0.
1	1846	564	0.	6.1	1639.0	*	2	17001231	0.	6.1	1639.0	*	3	15141898	0.
1	1848	565	0.	6.1	1639.0	*	2	17021232	0.	6.1	1639.0	*	3	15161899	0.
1	1850	566	0.	6.1	1639.0	*	2	17041233	0.	6.1	1639.0	*	3	15181900	0.
1	1852	567	0.	6.1	1639.0	*	2	17061234	0.	6.1	1639.0	*	3	15201901	0.
1	1854	568	0.	6.1	1639.0	*	2	17081235	0.	6.1	1639.0	*	3	15221902	0.
1	1856	569	0.	6.1	1639.0	*	2	17101236	0.	6.1	1639.0	*	3	15241903	0.
1	1858	570	0.	6.1	1639.0	*	2	17121237	0.	6.1	1639.0	*	3	15261904	0.
1	1900	571	0.	6.1	1639.0	*	2	17141238	0.	6.1	1639.0	*	3	15281905	0.
1	1902	572	0.	6.1	1639.0	*	2	17161239	0.	6.1	1639.0	*	3	15301906	0.
1	1904	573	0.	6.1	1639.0	*	2	17181240	0.	6.1	1639.0	*	3	15321907	0.
1	1906	574	0.	6.1	1639.0	*	2	17201241	0.	6.1	1639.0	*	3	15341908	0.
1	1908	575	0.	6.1	1639.0	*	2	17221242	0.	6.1	1639.0	*	3	15361909	0.
1	1910	576	0.	6.1	1639.0	*	2	17241243	0.	6.1	1639.0	*	3	15381910	0.
1	1912	577	0.	6.1	1639.0	*	2	17261244	0.	6.1	1639.0	*	3	15401911	0.
1	1914	578	0.	6.1	1639.0	*	2	17281245	0.	6.1	1639.0	*	3	15421912	0.
1	1916	579	0.	6.1	1639.0	*	2	17301246	0.	6.1	1639.0	*	3	15441913	0.
1	1918	580	0.	6.1	1639.0	*	2	17321247	0.	6.1	1639.0	*	3	15461914	0.
1	1920	581	0.	6.1	1639.0	*	2	17341248	0.	6.1	1639.0	*	3	15481915	0.
1	1922	582	0.	6.1	1639.0	*	2	17361249	0.	6.1	1639.0	*	3	15501916	0.
1	1924	583	0.	6.1	1639.0	*	2	17381250	0.	6.1	1639.0	*	3	15521917	0.
1	1926	584	0.	6.1	1639.0	*	2	17401251	0.	6.1	1639.0	*	3	15541918	0.
1	1928	585	0.	6.1	1639.0	*	2	17421252	0.	6.1	1639.0	*	3	15561919	0.
1	1930	586	0.	6.1	1639.0	*	2	17441253	0.	6.1	1639.0	*	3	15581920	0.
1	1932	587	0.	6.1	1639.0	*	2	17461254	0.	6.1	1639.0	*	3	16001921	0.
1	1934	588	0.	6.1	1639.0	*	2	17481255	0.	6.1	1639.0	*	3	16021922	0.
1	1936	589	0.	6.1	1639.0	*	2	17501256	0.	6.1	1639.0	*	3	16041923	0.
1	1938	590	0.	6.1	1639.0	*	2	17521257	0.	6.1	1639.0	*	3	16061924	0.
1	1940	591	0.	6.1	1639.0	*	2	17541258	0.	6.1	1639.0	*	3	16081925	0.
1	1942	592	0.	6.1	1639.0	*	2	17561259	0.	6.1	1639.0	*	3	16101926	0.

1	1944	593	0.	6.1	1639.0	*	2	17581260	0.	6.1	1639.0	*	3	16121927	0.
1	1946	594	0.	6.1	1639.0	*	2	18001261	0.	6.1	1639.0	*	3	16141928	0.
1	1948	595	0.	6.1	1639.0	*	2	18021262	0.	6.1	1639.0	*	3	16161929	0.
1	1950	596	0.	6.1	1639.0	*	2	18041263	0.	6.1	1639.0	*	3	16181930	0.
1	1952	597	0.	6.1	1639.0	*	2	18061264	0.	6.1	1639.0	*	3	16201931	0.
1	1954	598	0.	6.1	1639.0	*	2	18081265	0.	6.1	1639.0	*	3	16221932	0.
1	1956	599	0.	6.1	1639.0	*	2	18101266	0.	6.1	1639.0	*	3	16241933	0.
1	1958	600	0.	6.1	1639.0	*	2	18121267	0.	6.1	1639.0	*	3	16261934	0.
1	2000	601	0.	6.1	1639.0	*	2	18141268	0.	6.1	1639.0	*	3	16281935	0.
1	2002	602	0.	6.1	1639.0	*	2	18161269	0.	6.1	1639.0	*	3	16301936	0.
1	2004	603	0.	6.1	1639.0	*	2	18181270	0.	6.1	1639.0	*	3	16321937	0.
1	2006	604	0.	6.1	1639.0	*	2	18201271	0.	6.1	1639.0	*	3	16341938	0.
1	2008	605	0.	6.1	1639.0	*	2	18221272	0.	6.1	1639.0	*	3	16361939	0.
1	2010	606	0.	6.1	1639.0	*	2	18241273	0.	6.1	1639.0	*	3	16381940	0.
1	2012	607	0.	6.1	1639.0	*	2	18261274	0.	6.1	1639.0	*	3	16401941	0.
1	2014	608	0.	6.1	1639.0	*	2	18281275	0.	6.1	1639.0	*	3	16421942	0.
1	2016	609	0.	6.1	1639.0	*	2	18301276	0.	6.1	1639.0	*	3	16441943	0.
1	2018	610	0.	6.1	1639.0	*	2	18321277	0.	6.1	1639.0	*	3	16461944	0.
1	2020	611	0.	6.1	1639.0	*	2	18341278	0.	6.1	1639.0	*	3	16481945	0.
1	2022	612	0.	6.1	1639.0	*	2	18361279	0.	6.1	1639.0	*	3	16501946	0.
1	2024	613	0.	6.1	1639.0	*	2	18381280	0.	6.1	1639.0	*	3	16521947	0.
1	2026	614	0.	6.1	1639.0	*	2	18401281	0.	6.1	1639.0	*	3	16541948	0.
1	2028	615	0.	6.1	1639.0	*	2	18421282	0.	6.1	1639.0	*	3	16561949	0.
1	2030	616	0.	6.1	1639.0	*	2	18441283	0.	6.1	1639.0	*	3	16581950	0.
1	2032	617	0.	6.1	1639.0	*	2	18461284	0.	6.1	1639.0	*	3	17001951	0.
1	2034	618	0.	6.1	1639.0	*	2	18481285	0.	6.1	1639.0	*	3	17021952	0.
1	2036	619	0.	6.1	1639.0	*	2	18501286	0.	6.1	1639.0	*	3	17041953	0.
1	2038	620	0.	6.1	1639.0	*	2	18521287	0.	6.1	1639.0	*	3	17061954	0.
1	2040	621	0.	6.1	1639.0	*	2	18541288	0.	6.1	1639.0	*	3	17081955	0.
1	2042	622	0.	6.1	1639.0	*	2	18561289	0.	6.1	1639.0	*	3	17101956	0.
1	2044	623	0.	6.1	1639.0	*	2	18581290	0.	6.1	1639.0	*	3	17121957	0.
1	2046	624	0.	6.1	1639.0	*	2	19001291	0.	6.1	1639.0	*	3	17141958	0.
1	2048	625	0.	6.1	1639.0	*	2	19021292	0.	6.1	1639.0	*	3	17161959	0.
1	2050	626	0.	6.1	1639.0	*	2	19041293	0.	6.1	1639.0	*	3	17181960	0.
1	2052	627	0.	6.1	1639.0	*	2	19061294	0.	6.1	1639.0	*	3	17201961	0.
1	2054	628	0.	6.1	1639.0	*	2	19081295	0.	6.1	1639.0	*	3	17221962	0.
1	2056	629	0.	6.1	1639.0	*	2	19101296	0.	6.1	1639.0	*	3	17241963	0.
1	2058	630	0.	6.1	1639.0	*	2	19121297	0.	6.1	1639.0	*	3	17261964	0.
1	2100	631	0.	6.1	1639.0	*	2	19141298	0.	6.1	1639.0	*	3	17281965	0.
1	2102	632	0.	6.1	1639.0	*	2	19161299	0.	6.1	1639.0	*	3	17301966	0.
1	2104	633	0.	6.1	1639.0	*	2	19181300	0.	6.1	1639.0	*	3	17321967	0.
1	2106	634	0.	6.1	1639.0	*	2	19201301	0.	6.1	1639.0	*	3	17341968	0.
1	2108	635	0.	6.1	1639.0	*	2	19221302	0.	6.1	1639.0	*	3	17361969	0.
1	2110	636	0.	6.1	1639.0	*	2	19241303	0.	6.1	1639.0	*	3	17381970	0.
1	2112	637	0.	6.1	1639.0	*	2	19261304	0.	6.1	1639.0	*	3	17401971	0.
1	2114	638	0.	6.1	1639.0	*	2	19281305	0.	6.1	1639.0	*	3	17421972	0.
1	2116	639	0.	6.1	1639.0	*	2	19301306	0.	6.1	1639.0	*	3	17441973	0.
1	2118	640	0.	6.1	1639.0	*	2	19321307	0.	6.1	1639.0	*	3	17461974	0.
1	2120	641	0.	6.1	1639.0	*	2	19341308	0.	6.1	1639.0	*	3	17481975	0.
1	2122	642	0.	6.1	1639.0	*	2	19361309	0.	6.1	1639.0	*	3	17501976	0.
1	2124	643	0.	6.1	1639.0	*	2	19381310	0.	6.1	1639.0	*	3	17521977	0.
1	2126	644	0.	6.1	1639.0	*	2	19401311	0.	6.1	1639.0	*	3	17541978	0.
1	2128	645	0.	6.1	1639.0	*	2	19421312	0.	6.1	1639.0	*	3	17561979	0.
1	2130	646	0.	6.1	1639.0	*	2	19441313	0.	6.1	1639.0	*	3	17581980	0.
1	2132	647	0.	6.1	1639.0	*	2	19461314	0.	6.1	1639.0	*	3	18001981	0.
1	2134	648	0.	6.1	1639.0	*	2	19481315	0.	6.1	1639.0	*	3	18021982	0.
1	2136	649	0.	6.1	1639.0	*	2	19501316	0.	6.1	1639.0	*	3	18041983	0.
1	2138	650	0.	6.1	1639.0	*	2	19521317	0.	6.1	1639.0	*	3	18061984	0.
1	2140	651	0.	6.1	1639.0	*	2	19541318	0.	6.1	1639.0	*	3	18081985	0.
1	2142	652	0.	6.1	1639.0	*	2	19561319	0.	6.1	1639.0	*	3	18101986	0.
1	2144	653	0.	6.1	1639.0	*	2	19581320	0.	6.1	1639.0	*	3	18121987	0.
1	2146	654	0.	6.1	1639.0	*	2	20001321	0.	6.1	1639.0	*	3	18141988	0.
1	2148	655	0.	6.1	1639.0	*	2	20021322	0.	6.1	1639.0	*	3	18161989	0.
1	2150	656	0.	6.1	1639.0	*	2	20041323	0.	6.1	1639.0	*	3	18181990	0.
1	2152	657	0.	6.1	1639.0	*	2	20061324	0.	6.1	1639.0	*	3	18201991	0.
1	2154	658	0.	6.1	1639.0	*	2	20081325	0.	6.1	1639.0	*	3	18221992	0.
1	2156	659	0.	6.1	1639.0	*	2	20101326	0.	6.1	1639.0	*	3	18241993	0.
1	2158	660	0.	6.1	1639.0	*	2	20121327	0.	6.1	1639.0	*	3	18261994	0.
1	2200	661	0.	6.1	1639.0	*	2	20141328	0.	6.1	1639.0	*	3	18281995	0.
1	2202	662	0.	6.1	1639.0	*	2	20161329	0.	6.1	1639.0	*	3	18301996	0.
1	2204	663	0.	6.1	1639.0	*	2	20181330	0.	6.1	1639.0	*	3	18321997	0.
1	2206	664	0.	6.1	1639.0	*	2	20201331	0.	6.1	1639.0	*	3	18341998	0.
1	2208	665	0.	6.1	1639.0	*	2	20221332	0.	6.1	1639.0	*	3	18361999	0.
1	2210	666	0.	6.1	1639.0	*	2	20241333	0.	6.1	1639.0	*	3	18382000	0.
1	2212	667	0.	6.1	1639.0	*	2	20261334	0.	6.1	1639.0	*			
						*						*			

****

	PEAK FLOW	TIME		MAXIMUM AVERAGE FLOW			
				6-HR	24-HR	72-HR	66.63-HR
+	(CFS)	(HR)					
			(CFS)				
+	164.	12.47		12.	3.	1.	1.
			(INCHES)	.070	.070	.070	.070

(AC-FT)	6.	6.	6.	6.	

PEAK STORAGE + (AC-FT)	TIME (HR)	MAXIMUM AVERAGE STORAGE 6-HR	24-HR	72-HR	66.63-HR
9.	12.47	6.	6.	5.	5.

PEAK STAGE + (FEET)	TIME (HR)	MAXIMUM AVERAGE STAGE 6-HR	24-HR	72-HR	66.63-HR
1640.70	12.47	1639.23	1639.06	1637.39	1637.39

CUMULATIVE AREA = 1.59 SQ MI

****

HYDROGRAPH AT SMCDB
TRANSPOSITION AREA 5.8 SQ MI

****

DA	MON	HRMN	ORD	OUTFLOW	STORAGE	STAGE	*	DA	MON	HRMN	ORD	OUTFLOW	STORAGE	STAGE	*	DA	MON	HRMN	ORD	OUTFLOW	STOR
1		0000	1	0.	.0	1630.0	*	1		2214	668	0.	6.1	1639.0	*	2		20281335		0.	
1		0002	2	0.	.0	1630.0	*	1		2216	669	0.	6.1	1639.0	*	2		20301336		0.	
1		0004	3	0.	.0	1630.0	*	1		2218	670	0.	6.1	1639.0	*	2		20321337		0.	
1		0006	4	0.	.0	1630.0	*	1		2220	671	0.	6.1	1639.0	*	2		20341338		0.	
1		0008	5	0.	.0	1630.0	*	1		2222	672	0.	6.1	1639.0	*	2		20361339		0.	
1		0010	6	0.	.0	1630.0	*	1		2224	673	0.	6.1	1639.0	*	2		20381340		0.	
1		0012	7	0.	.0	1630.0	*	1		2226	674	0.	6.1	1639.0	*	2		20401341		0.	
1		0014	8	0.	.0	1630.0	*	1		2228	675	0.	6.1	1639.0	*	2		20421342		0.	
1		0016	9	0.	.0	1630.0	*	1		2230	676	0.	6.1	1639.0	*	2		20441343		0.	
1		0018	10	0.	.0	1630.0	*	1		2232	677	0.	6.1	1639.0	*	2		20461344		0.	
1		0020	11	0.	.0	1630.0	*	1		2234	678	0.	6.1	1639.0	*	2		20481345		0.	
1		0022	12	0.	.0	1630.0	*	1		2236	679	0.	6.1	1639.0	*	2		20501346		0.	
1		0024	13	0.	.0	1630.0	*	1		2238	680	0.	6.1	1639.0	*	2		20521347		0.	
1		0026	14	0.	.0	1630.0	*	1		2240	681	0.	6.1	1639.0	*	2		20541348		0.	
1		0028	15	0.	.0	1630.0	*	1		2242	682	0.	6.1	1639.0	*	2		20561349		0.	
1		0030	16	0.	.0	1630.0	*	1		2244	683	0.	6.1	1639.0	*	2		20581350		0.	
1		0032	17	0.	.0	1630.0	*	1		2246	684	0.	6.1	1639.0	*	2		21001351		0.	
1		0034	18	0.	.0	1630.0	*	1		2248	685	0.	6.1	1639.0	*	2		21021352		0.	
1		0036	19	0.	.0	1630.0	*	1		2250	686	0.	6.1	1639.0	*	2		21041353		0.	
1		0038	20	0.	.0	1630.0	*	1		2252	687	0.	6.1	1639.0	*	2		21061354		0.	
1		0040	21	0.	.0	1630.0	*	1		2254	688	0.	6.1	1639.0	*	2		21081355		0.	
1		0042	22	0.	.0	1630.0	*	1		2256	689	0.	6.1	1639.0	*	2		21101356		0.	
1		0044	23	0.	.0	1630.0	*	1		2258	690	0.	6.1	1639.0	*	2		21121357		0.	
1		0046	24	0.	.0	1630.0	*	1		2300	691	0.	6.1	1639.0	*	2		21141358		0.	
1		0048	25	0.	.0	1630.0	*	1		2302	692	0.	6.1	1639.0	*	2		21161359		0.	
1		0050	26	0.	.0	1630.0	*	1		2304	693	0.	6.1	1639.0	*	2		21181360		0.	
1		0052	27	0.	.0	1630.0	*	1		2306	694	0.	6.1	1639.0	*	2		21201361		0.	
1		0054	28	0.	.0	1630.0	*	1		2308	695	0.	6.1	1639.0	*	2		21221362		0.	
1		0056	29	0.	.0	1630.0	*	1		2310	696	0.	6.1	1639.0	*	2		21241363		0.	
1		0058	30	0.	.0	1630.0	*	1		2312	697	0.	6.1	1639.0	*	2		21261364		0.	
1		0100	31	0.	.0	1630.0	*	1		2314	698	0.	6.1	1639.0	*	2		21281365		0.	
1		0102	32	0.	.0	1630.0	*	1		2316	699	0.	6.1	1639.0	*	2		21301366		0.	
1		0104	33	0.	.0	1630.0	*	1		2318	700	0.	6.1	1639.0	*	2		21321367		0.	
1		0106	34	0.	.0	1630.0	*	1		2320	701	0.	6.1	1639.0	*	2		21341368		0.	
1		0108	35	0.	.0	1630.0	*	1		2322	702	0.	6.1	1639.0	*	2		21361369		0.	
1		0110	36	0.	.0	1630.0	*	1		2324	703	0.	6.1	1639.0	*	2		21381370		0.	
1		0112	37	0.	.0	1630.0	*	1		2326	704	0.	6.1	1639.0	*	2		21401371		0.	
1		0114	38	0.	.0	1630.0	*	1		2328	705	0.	6.1	1639.0	*	2		21421372		0.	
1		0116	39	0.	.0	1630.0	*	1		2330	706	0.	6.1	1639.0	*	2		21441373		0.	
1		0118	40	0.	.0	1630.0	*	1		2332	707	0.	6.1	1639.0	*	2		21461374		0.	
1		0120	41	0.	.0	1630.0	*	1		2334	708	0.	6.1	1639.0	*	2		21481375		0.	
1		0122	42	0.	.0	1630.0	*	1		2336	709	0.	6.1	1639.0	*	2		21501376		0.	
1		0124	43	0.	.0	1630.0	*	1		2338	710	0.	6.1	1639.0	*	2		21521377		0.	
1		0126	44	0.	.0	1630.0	*	1		2340	711	0.	6.1	1639.0	*	2		21541378		0.	
1		0128	45	0.	.0	1630.0	*	1		2342	712	0.	6.1	1639.0	*	2		21561379		0.	
1		0130	46	0.	.0	1630.0	*	1		2344	713	0.	6.1	1639.0	*	2		21581380		0.	
1		0132	47	0.	.0	1630.0	*	1		2346	714	0.	6.1	1639.0	*	2		22001381		0.	
1		0134	48	0.	.0	1630.0	*	1		2348	715	0.	6.1	1639.0	*	2		22021382		0.	
1		0136	49	0.	.0	1630.0	*	1		2350	716	0.	6.1	1639.0	*	2		22041383		0.	
1		0138	50	0.	.0	1630.0	*	1		2352	717	0.	6.1	1639.0	*	2		22061384		0.	
1		0140	51	0.	.0	1630.0	*	1		2354	718	0.	6.1	1639.0	*	2		22081385		0.	
1		0142	52	0.	.0	1630.0	*	1		2356	719	0.	6.1	1639.0	*	2		22101386		0.	
1		0144	53	0.	.0	1630.0	*	1		2358	720	0.	6.1	1639.0	*	2		22121387		0.	
1		0146	54	0.	.0	1630.0	*	2		0000	721	0.	6.1	1639.0	*	2		22141388		0.	
1		0148	55	0.	.0	1630.0	*	2		0002	722	0.	6.1	1639.0	*	2		22161389		0.	
1		0150	56	0.	.0	1630.0	*	2		0004	723	0.	6.1	1639.0	*	2		22181390		0.	
1		0152	57	0.	.0	1630.0	*	2		0006	724	0.	6.1	1639.0	*	2		22201391		0.	
1		0154	58	0.	.0	1630.0	*	2		0008	725	0.	6.1	1639.0	*	2		22221392		0.	
1		0156	59	0.	.0	1630.0	*	2		0010	726	0.	6.1	1639.0	*	2		22241393		0.	
1		0158	60	0.	.0	1630.0	*	2		0012	727	0.	6.1	1639.0	*	2		22261394		0.	

1	0200	61	0.	.0	1630.0	*	2	0014	728	0.	6.1	1639.0	*	2	22281395	0.
1	0202	62	0.	.0	1630.0	*	2	0016	729	0.	6.1	1639.0	*	2	22301396	0.
1	0204	63	0.	.0	1630.0	*	2	0018	730	0.	6.1	1639.0	*	2	22321397	0.
1	0206	64	0.	.0	1630.0	*	2	0020	731	0.	6.1	1639.0	*	2	22341398	0.
1	0208	65	0.	.0	1630.0	*	2	0022	732	0.	6.1	1639.0	*	2	22361399	0.
1	0210	66	0.	.0	1630.0	*	2	0024	733	0.	6.1	1639.0	*	2	22381400	0.
1	0212	67	0.	.0	1630.0	*	2	0026	734	0.	6.1	1639.0	*	2	22401401	0.
1	0214	68	0.	.0	1630.0	*	2	0028	735	0.	6.1	1639.0	*	2	22421402	0.
1	0216	69	0.	.0	1630.0	*	2	0030	736	0.	6.1	1639.0	*	2	22441403	0.
1	0218	70	0.	.0	1630.0	*	2	0032	737	0.	6.1	1639.0	*	2	22461404	0.
1	0220	71	0.	.0	1630.0	*	2	0034	738	0.	6.1	1639.0	*	2	22481405	0.
1	0222	72	0.	.0	1630.0	*	2	0036	739	0.	6.1	1639.0	*	2	22501406	0.
1	0224	73	0.	.0	1630.0	*	2	0038	740	0.	6.1	1639.0	*	2	22521407	0.
1	0226	74	0.	.0	1630.0	*	2	0040	741	0.	6.1	1639.0	*	2	22541408	0.
1	0228	75	0.	.0	1630.0	*	2	0042	742	0.	6.1	1639.0	*	2	22561409	0.
1	0230	76	0.	.0	1630.0	*	2	0044	743	0.	6.1	1639.0	*	2	22581410	0.
1	0232	77	0.	.0	1630.0	*	2	0046	744	0.	6.1	1639.0	*	2	23001411	0.
1	0234	78	0.	.0	1630.0	*	2	0048	745	0.	6.1	1639.0	*	2	23021412	0.
1	0236	79	0.	.0	1630.0	*	2	0050	746	0.	6.1	1639.0	*	2	23041413	0.
1	0238	80	0.	.0	1630.0	*	2	0052	747	0.	6.1	1639.0	*	2	23061414	0.
1	0240	81	0.	.0	1630.0	*	2	0054	748	0.	6.1	1639.0	*	2	23081415	0.
1	0242	82	0.	.0	1630.0	*	2	0056	749	0.	6.1	1639.0	*	2	23101416	0.
1	0244	83	0.	.0	1630.0	*	2	0058	750	0.	6.1	1639.0	*	2	23121417	0.
1	0246	84	0.	.0	1630.0	*	2	0100	751	0.	6.1	1639.0	*	2	23141418	0.
1	0248	85	0.	.0	1630.0	*	2	0102	752	0.	6.1	1639.0	*	2	23161419	0.
1	0250	86	0.	.0	1630.0	*	2	0104	753	0.	6.1	1639.0	*	2	23181420	0.
1	0252	87	0.	.0	1630.0	*	2	0106	754	0.	6.1	1639.0	*	2	23201421	0.
1	0254	88	0.	.0	1630.0	*	2	0108	755	0.	6.1	1639.0	*	2	23221422	0.
1	0256	89	0.	.0	1630.0	*	2	0110	756	0.	6.1	1639.0	*	2	23241423	0.
1	0258	90	0.	.0	1630.0	*	2	0112	757	0.	6.1	1639.0	*	2	23261424	0.
1	0300	91	0.	.0	1630.0	*	2	0114	758	0.	6.1	1639.0	*	2	23281425	0.
1	0302	92	0.	.0	1630.0	*	2	0116	759	0.	6.1	1639.0	*	2	23301426	0.
1	0304	93	0.	.0	1630.0	*	2	0118	760	0.	6.1	1639.0	*	2	23321427	0.
1	0306	94	0.	.0	1630.0	*	2	0120	761	0.	6.1	1639.0	*	2	23341428	0.
1	0308	95	0.	.0	1630.0	*	2	0122	762	0.	6.1	1639.0	*	2	23361429	0.
1	0310	96	0.	.0	1630.0	*	2	0124	763	0.	6.1	1639.0	*	2	23381430	0.
1	0312	97	0.	.0	1630.0	*	2	0126	764	0.	6.1	1639.0	*	2	23401431	0.
1	0314	98	0.	.0	1630.0	*	2	0128	765	0.	6.1	1639.0	*	2	23421432	0.
1	0316	99	0.	.0	1630.0	*	2	0130	766	0.	6.1	1639.0	*	2	23441433	0.
1	0318	100	0.	.0	1630.0	*	2	0132	767	0.	6.1	1639.0	*	2	23461434	0.
1	0320	101	0.	.0	1630.0	*	2	0134	768	0.	6.1	1639.0	*	2	23481435	0.
1	0322	102	0.	.0	1630.0	*	2	0136	769	0.	6.1	1639.0	*	2	23501436	0.
1	0324	103	0.	.0	1630.0	*	2	0138	770	0.	6.1	1639.0	*	2	23521437	0.
1	0326	104	0.	.0	1630.0	*	2	0140	771	0.	6.1	1639.0	*	2	23541438	0.
1	0328	105	0.	.0	1630.0	*	2	0142	772	0.	6.1	1639.0	*	2	23561439	0.
1	0330	106	0.	.0	1630.0	*	2	0144	773	0.	6.1	1639.0	*	2	23581440	0.
1	0332	107	0.	.0	1630.0	*	2	0146	774	0.	6.1	1639.0	*	3	00001441	0.
1	0334	108	0.	.0	1630.0	*	2	0148	775	0.	6.1	1639.0	*	3	00021442	0.
1	0336	109	0.	.0	1630.0	*	2	0150	776	0.	6.1	1639.0	*	3	00041443	0.
1	0338	110	0.	.0	1630.0	*	2	0152	777	0.	6.1	1639.0	*	3	00061444	0.
1	0340	111	0.	.0	1630.0	*	2	0154	778	0.	6.1	1639.0	*	3	00081445	0.
1	0342	112	0.	.0	1630.0	*	2	0156	779	0.	6.1	1639.0	*	3	00101446	0.
1	0344	113	0.	.0	1630.0	*	2	0158	780	0.	6.1	1639.0	*	3	00121447	0.
1	0346	114	0.	.0	1630.0	*	2	0200	781	0.	6.1	1639.0	*	3	00141448	0.
1	0348	115	0.	.0	1630.0	*	2	0202	782	0.	6.1	1639.0	*	3	00161449	0.
1	0350	116	0.	.0	1630.0	*	2	0204	783	0.	6.1	1639.0	*	3	00181450	0.
1	0352	117	0.	.0	1630.0	*	2	0206	784	0.	6.1	1639.0	*	3	00201451	0.
1	0354	118	0.	.0	1630.0	*	2	0208	785	0.	6.1	1639.0	*	3	00221452	0.
1	0356	119	0.	.0	1630.0	*	2	0210	786	0.	6.1	1639.0	*	3	00241453	0.
1	0358	120	0.	.0	1630.0	*	2	0212	787	0.	6.1	1639.0	*	3	00261454	0.
1	0400	121	0.	.0	1630.0	*	2	0214	788	0.	6.1	1639.0	*	3	00281455	0.
1	0402	122	0.	.0	1630.0	*	2	0216	789	0.	6.1	1639.0	*	3	00301456	0.
1	0404	123	0.	.0	1630.0	*	2	0218	790	0.	6.1	1639.0	*	3	00321457	0.
1	0406	124	0.	.0	1630.0	*	2	0220	791	0.	6.1	1639.0	*	3	00341458	0.
1	0408	125	0.	.0	1630.0	*	2	0222	792	0.	6.1	1639.0	*	3	00361459	0.
1	0410	126	0.	.0	1630.0	*	2	0224	793	0.	6.1	1639.0	*	3	00381460	0.
1	0412	127	0.	.0	1630.0	*	2	0226	794	0.	6.1	1639.0	*	3	00401461	0.
1	0414	128	0.	.0	1630.0	*	2	0228	795	0.	6.1	1639.0	*	3	00421462	0.
1	0416	129	0.	.0	1630.0	*	2	0230	796	0.	6.1	1639.0	*	3	00441463	0.
1	0418	130	0.	.0	1630.0	*	2	0232	797	0.	6.1	1639.0	*	3	00461464	0.
1	0420	131	0.	.0	1630.0	*	2	0234	798	0.	6.1	1639.0	*	3	00481465	0.
1	0422	132	0.	.0	1630.0	*	2	0236	799	0.	6.1	1639.0	*	3	00501466	0.
1	0424	133	0.	.0	1630.0	*	2	0238	800	0.	6.1	1639.0	*	3	00521467	0.
1	0426	134	0.	.0	1630.0	*	2	0240	801	0.	6.1	1639.0	*	3	00541468	0.
1	0428	135	0.	.0	1630.0	*	2	0242	802	0.	6.1	1639.0	*	3	00561469	0.
1	0430	136	0.	.0	1630.0	*	2	0244	803	0.	6.1	1639.0	*	3	00581470	0.
1	0432	137	0.	.0	1630.0	*	2	0246	804	0.	6.1	1639.0	*	3	01001471	0.
1	0434	138	0.	.0	1630.0	*	2	0248	805	0.	6.1	1639.0	*	3	01021472	0.
1	0436	139	0.	.0	1630.0	*	2	0250	806	0.	6.1	1639.0	*	3	01041473	0.
1	0438	140	0.	.0	1630.0	*	2	0252	807	0.	6.1	1639.0	*	3	01061474	0.
1	0440	141	0.	.0	1630.0	*	2	0254	808	0.	6.1	1639.0	*	3	01081475	0.
1	0442	142	0.	.0	1630.0	*	2	0256	809	0.	6.1	1639.0	*	3	01101476	0.
1	0444	143	0.	.0	1630.0	*	2	0258	810	0.	6.1	1639.0	*	3	01121477	0.
1	0446	144	0.	.0	1630.0	*	2	0300	811	0.	6.1	1639.0	*	3	01141478	0.

1	0448	145	0.	.0	1630.0	*	2	0302	812	0.	6.1	1639.0	*	3	01161479	0.
1	0450	146	0.	.0	1630.0	*	2	0304	813	0.	6.1	1639.0	*	3	01181480	0.
1	0452	147	0.	.0	1630.0	*	2	0306	814	0.	6.1	1639.0	*	3	01201481	0.
1	0454	148	0.	.0	1630.0	*	2	0308	815	0.	6.1	1639.0	*	3	01221482	0.
1	0456	149	0.	.0	1630.0	*	2	0310	816	0.	6.1	1639.0	*	3	01241483	0.
1	0458	150	0.	.0	1630.0	*	2	0312	817	0.	6.1	1639.0	*	3	01261484	0.
1	0500	151	0.	.0	1630.0	*	2	0314	818	0.	6.1	1639.0	*	3	01281485	0.
1	0502	152	0.	.0	1630.0	*	2	0316	819	0.	6.1	1639.0	*	3	01301486	0.
1	0504	153	0.	.0	1630.0	*	2	0318	820	0.	6.1	1639.0	*	3	01321487	0.
1	0506	154	0.	.0	1630.0	*	2	0320	821	0.	6.1	1639.0	*	3	01341488	0.
1	0508	155	0.	.0	1630.0	*	2	0322	822	0.	6.1	1639.0	*	3	01361489	0.
1	0510	156	0.	.0	1630.0	*	2	0324	823	0.	6.1	1639.0	*	3	01381490	0.
1	0512	157	0.	.0	1630.0	*	2	0326	824	0.	6.1	1639.0	*	3	01401491	0.
1	0514	158	0.	.0	1630.0	*	2	0328	825	0.	6.1	1639.0	*	3	01421492	0.
1	0516	159	0.	.0	1630.0	*	2	0330	826	0.	6.1	1639.0	*	3	01441493	0.
1	0518	160	0.	.0	1630.0	*	2	0332	827	0.	6.1	1639.0	*	3	01461494	0.
1	0520	161	0.	.0	1630.0	*	2	0334	828	0.	6.1	1639.0	*	3	01481495	0.
1	0522	162	0.	.0	1630.0	*	2	0336	829	0.	6.1	1639.0	*	3	01501496	0.
1	0524	163	0.	.0	1630.0	*	2	0338	830	0.	6.1	1639.0	*	3	01521497	0.
1	0526	164	0.	.0	1630.0	*	2	0340	831	0.	6.1	1639.0	*	3	01541498	0.
1	0528	165	0.	.0	1630.0	*	2	0342	832	0.	6.1	1639.0	*	3	01561499	0.
1	0530	166	0.	.0	1630.0	*	2	0344	833	0.	6.1	1639.0	*	3	01581500	0.
1	0532	167	0.	.0	1630.0	*	2	0346	834	0.	6.1	1639.0	*	3	02001501	0.
1	0534	168	0.	.0	1630.0	*	2	0348	835	0.	6.1	1639.0	*	3	02021502	0.
1	0536	169	0.	.0	1630.0	*	2	0350	836	0.	6.1	1639.0	*	3	02041503	0.
1	0538	170	0.	.0	1630.0	*	2	0352	837	0.	6.1	1639.0	*	3	02061504	0.
1	0540	171	0.	.0	1630.0	*	2	0354	838	0.	6.1	1639.0	*	3	02081505	0.
1	0542	172	0.	.0	1630.0	*	2	0356	839	0.	6.1	1639.0	*	3	02101506	0.
1	0544	173	0.	.0	1630.0	*	2	0358	840	0.	6.1	1639.0	*	3	02121507	0.
1	0546	174	0.	.0	1630.0	*	2	0400	841	0.	6.1	1639.0	*	3	02141508	0.
1	0548	175	0.	.0	1630.0	*	2	0402	842	0.	6.1	1639.0	*	3	02161509	0.
1	0550	176	0.	.0	1630.0	*	2	0404	843	0.	6.1	1639.0	*	3	02181510	0.
1	0552	177	0.	.0	1630.0	*	2	0406	844	0.	6.1	1639.0	*	3	02201511	0.
1	0554	178	0.	.0	1630.0	*	2	0408	845	0.	6.1	1639.0	*	3	02221512	0.
1	0556	179	0.	.0	1630.0	*	2	0410	846	0.	6.1	1639.0	*	3	02241513	0.
1	0558	180	0.	.0	1630.0	*	2	0412	847	0.	6.1	1639.0	*	3	02261514	0.
1	0600	181	0.	.0	1630.0	*	2	0414	848	0.	6.1	1639.0	*	3	02281515	0.
1	0602	182	0.	.0	1630.0	*	2	0416	849	0.	6.1	1639.0	*	3	02301516	0.
1	0604	183	0.	.0	1630.0	*	2	0418	850	0.	6.1	1639.0	*	3	02321517	0.
1	0606	184	0.	.0	1630.0	*	2	0420	851	0.	6.1	1639.0	*	3	02341518	0.
1	0608	185	0.	.0	1630.0	*	2	0422	852	0.	6.1	1639.0	*	3	02361519	0.
1	0610	186	0.	.0	1630.0	*	2	0424	853	0.	6.1	1639.0	*	3	02381520	0.
1	0612	187	0.	.0	1630.0	*	2	0426	854	0.	6.1	1639.0	*	3	02401521	0.
1	0614	188	0.	.0	1630.0	*	2	0428	855	0.	6.1	1639.0	*	3	02421522	0.
1	0616	189	0.	.0	1630.0	*	2	0430	856	0.	6.1	1639.0	*	3	02441523	0.
1	0618	190	0.	.0	1630.0	*	2	0432	857	0.	6.1	1639.0	*	3	02461524	0.
1	0620	191	0.	.0	1630.0	*	2	0434	858	0.	6.1	1639.0	*	3	02481525	0.
1	0622	192	0.	.0	1630.0	*	2	0436	859	0.	6.1	1639.0	*	3	02501526	0.
1	0624	193	0.	.0	1630.0	*	2	0438	860	0.	6.1	1639.0	*	3	02521527	0.
1	0626	194	0.	.0	1630.0	*	2	0440	861	0.	6.1	1639.0	*	3	02541528	0.
1	0628	195	0.	.0	1630.0	*	2	0442	862	0.	6.1	1639.0	*	3	02561529	0.
1	0630	196	0.	.0	1630.0	*	2	0444	863	0.	6.1	1639.0	*	3	02581530	0.
1	0632	197	0.	.0	1630.0	*	2	0446	864	0.	6.1	1639.0	*	3	03001531	0.
1	0634	198	0.	.0	1630.0	*	2	0448	865	0.	6.1	1639.0	*	3	03021532	0.
1	0636	199	0.	.0	1630.0	*	2	0450	866	0.	6.1	1639.0	*	3	03041533	0.
1	0638	200	0.	.0	1630.0	*	2	0452	867	0.	6.1	1639.0	*	3	03061534	0.
1	0640	201	0.	.0	1630.0	*	2	0454	868	0.	6.1	1639.0	*	3	03081535	0.
1	0642	202	0.	.0	1630.0	*	2	0456	869	0.	6.1	1639.0	*	3	03101536	0.
1	0644	203	0.	.0	1630.0	*	2	0458	870	0.	6.1	1639.0	*	3	03121537	0.
1	0646	204	0.	.0	1630.0	*	2	0500	871	0.	6.1	1639.0	*	3	03141538	0.
1	0648	205	0.	.0	1630.0	*	2	0502	872	0.	6.1	1639.0	*	3	03161539	0.
1	0650	206	0.	.0	1630.0	*	2	0504	873	0.	6.1	1639.0	*	3	03181540	0.
1	0652	207	0.	.0	1630.0	*	2	0506	874	0.	6.1	1639.0	*	3	03201541	0.
1	0654	208	0.	.0	1630.0	*	2	0508	875	0.	6.1	1639.0	*	3	03221542	0.
1	0656	209	0.	.0	1630.0	*	2	0510	876	0.	6.1	1639.0	*	3	03241543	0.
1	0658	210	0.	.0	1630.0	*	2	0512	877	0.	6.1	1639.0	*	3	03261544	0.
1	0700	211	0.	.0	1630.0	*	2	0514	878	0.	6.1	1639.0	*	3	03281545	0.
1	0702	212	0.	.0	1630.0	*	2	0516	879	0.	6.1	1639.0	*	3	03301546	0.
1	0704	213	0.	.0	1630.0	*	2	0518	880	0.	6.1	1639.0	*	3	03321547	0.
1	0706	214	0.	.0	1630.0	*	2	0520	881	0.	6.1	1639.0	*	3	03341548	0.
1	0708	215	0.	.0	1630.0	*	2	0522	882	0.	6.1	1639.0	*	3	03361549	0.
1	0710	216	0.	.0	1630.0	*	2	0524	883	0.	6.1	1639.0	*	3	03381550	0.
1	0712	217	0.	.0	1630.0	*	2	0526	884	0.	6.1	1639.0	*	3	03401551	0.
1	0714	218	0.	.0	1630.0	*	2	0528	885	0.	6.1	1639.0	*	3	03421552	0.
1	0716	219	0.	.0	1630.0	*	2	0530	886	0.	6.1	1639.0	*	3	03441553	0.
1	0718	220	0.	.0	1630.0	*	2	0532	887	0.	6.1	1639.0	*	3	03461554	0.
1	0720	221	0.	.0	1630.0	*	2	0534	888	0.	6.1	1639.0	*	3	03481555	0.
1	0722	222	0.	.0	1630.0	*	2	0536	889	0.	6.1	1639.0	*	3	03501556	0.
1	0724	223	0.	.0	1630.0	*	2	0538	890	0.	6.1	1639.0	*	3	03521557	0.
1	0726	224	0.	.0	1630.0	*	2	0540	891	0.	6.1	1639.0	*	3	03541558	0.
1	0728	225	0.	.0	1630.0	*	2	0542	892	0.	6.1	1639.0	*	3	03561559	0.
1	0730	226	0.	.0	1630.0	*	2	0544	893	0.	6.1	1639.0	*	3	03581560	0.
1	0732	227	0.	.0	1630.0	*	2	0546	894	0.	6.1	1639.0	*	3	04001561	0.
1	0734	228	0.	.0	1630.0	*	2	0548	895	0.	6.1	1639.0	*	3	04021562	0.

1	0736	229	0.	.0	1630.0	*	2	0550	896	0.	6.1	1639.0	*	3	04041563	0.
1	0738	230	0.	.0	1630.0	*	2	0552	897	0.	6.1	1639.0	*	3	04061564	0.
1	0740	231	0.	.0	1630.0	*	2	0554	898	0.	6.1	1639.0	*	3	04081565	0.
1	0742	232	0.	.0	1630.0	*	2	0556	899	0.	6.1	1639.0	*	3	04101566	0.
1	0744	233	0.	.0	1630.0	*	2	0558	900	0.	6.1	1639.0	*	3	04121567	0.
1	0746	234	0.	.0	1630.0	*	2	0600	901	0.	6.1	1639.0	*	3	04141568	0.
1	0748	235	0.	.0	1630.0	*	2	0602	902	0.	6.1	1639.0	*	3	04161569	0.
1	0750	236	0.	.0	1630.0	*	2	0604	903	0.	6.1	1639.0	*	3	04181570	0.
1	0752	237	0.	.0	1630.0	*	2	0606	904	0.	6.1	1639.0	*	3	04201571	0.
1	0754	238	0.	.0	1630.0	*	2	0608	905	0.	6.1	1639.0	*	3	04221572	0.
1	0756	239	0.	.0	1630.0	*	2	0610	906	0.	6.1	1639.0	*	3	04241573	0.
1	0758	240	0.	.0	1630.0	*	2	0612	907	0.	6.1	1639.0	*	3	04261574	0.
1	0800	241	0.	.0	1630.0	*	2	0614	908	0.	6.1	1639.0	*	3	04281575	0.
1	0802	242	0.	.0	1630.0	*	2	0616	909	0.	6.1	1639.0	*	3	04301576	0.
1	0804	243	0.	.0	1630.0	*	2	0618	910	0.	6.1	1639.0	*	3	04321577	0.
1	0806	244	0.	.0	1630.0	*	2	0620	911	0.	6.1	1639.0	*	3	04341578	0.
1	0808	245	0.	.0	1630.0	*	2	0622	912	0.	6.1	1639.0	*	3	04361579	0.
1	0810	246	0.	.0	1630.0	*	2	0624	913	0.	6.1	1639.0	*	3	04381580	0.
1	0812	247	0.	.0	1630.0	*	2	0626	914	0.	6.1	1639.0	*	3	04401581	0.
1	0814	248	0.	.0	1630.0	*	2	0628	915	0.	6.1	1639.0	*	3	04421582	0.
1	0816	249	0.	.0	1630.0	*	2	0630	916	0.	6.1	1639.0	*	3	04441583	0.
1	0818	250	0.	.0	1630.0	*	2	0632	917	0.	6.1	1639.0	*	3	04461584	0.
1	0820	251	0.	.0	1630.0	*	2	0634	918	0.	6.1	1639.0	*	3	04481585	0.
1	0822	252	0.	.0	1630.0	*	2	0636	919	0.	6.1	1639.0	*	3	04501586	0.
1	0824	253	0.	.0	1630.0	*	2	0638	920	0.	6.1	1639.0	*	3	04521587	0.
1	0826	254	0.	.0	1630.0	*	2	0640	921	0.	6.1	1639.0	*	3	04541588	0.
1	0828	255	0.	.0	1630.0	*	2	0642	922	0.	6.1	1639.0	*	3	04561589	0.
1	0830	256	0.	.0	1630.0	*	2	0644	923	0.	6.1	1639.0	*	3	04581590	0.
1	0832	257	0.	.0	1630.0	*	2	0646	924	0.	6.1	1639.0	*	3	05001591	0.
1	0834	258	0.	.0	1630.0	*	2	0648	925	0.	6.1	1639.0	*	3	05021592	0.
1	0836	259	0.	.0	1630.0	*	2	0650	926	0.	6.1	1639.0	*	3	05041593	0.
1	0838	260	0.	.0	1630.0	*	2	0652	927	0.	6.1	1639.0	*	3	05061594	0.
1	0840	261	0.	.0	1630.0	*	2	0654	928	0.	6.1	1639.0	*	3	05081595	0.
1	0842	262	0.	.0	1630.0	*	2	0656	929	0.	6.1	1639.0	*	3	05101596	0.
1	0844	263	0.	.0	1630.0	*	2	0658	930	0.	6.1	1639.0	*	3	05121597	0.
1	0846	264	0.	.0	1630.0	*	2	0700	931	0.	6.1	1639.0	*	3	05141598	0.
1	0848	265	0.	.0	1630.0	*	2	0702	932	0.	6.1	1639.0	*	3	05161599	0.
1	0850	266	0.	.0	1630.0	*	2	0704	933	0.	6.1	1639.0	*	3	05181600	0.
1	0852	267	0.	.0	1630.0	*	2	0706	934	0.	6.1	1639.0	*	3	05201601	0.
1	0854	268	0.	.0	1630.0	*	2	0708	935	0.	6.1	1639.0	*	3	05221602	0.
1	0856	269	0.	.0	1630.0	*	2	0710	936	0.	6.1	1639.0	*	3	05241603	0.
1	0858	270	0.	.0	1630.0	*	2	0712	937	0.	6.1	1639.0	*	3	05261604	0.
1	0900	271	0.	.0	1630.0	*	2	0714	938	0.	6.1	1639.0	*	3	05281605	0.
1	0902	272	0.	.0	1630.0	*	2	0716	939	0.	6.1	1639.0	*	3	05301606	0.
1	0904	273	0.	.0	1630.0	*	2	0718	940	0.	6.1	1639.0	*	3	05321607	0.
1	0906	274	0.	.0	1630.0	*	2	0720	941	0.	6.1	1639.0	*	3	05341608	0.
1	0908	275	0.	.0	1630.0	*	2	0722	942	0.	6.1	1639.0	*	3	05361609	0.
1	0910	276	0.	.0	1630.0	*	2	0724	943	0.	6.1	1639.0	*	3	05381610	0.
1	0912	277	0.	.0	1630.0	*	2	0726	944	0.	6.1	1639.0	*	3	05401611	0.
1	0914	278	0.	.0	1630.0	*	2	0728	945	0.	6.1	1639.0	*	3	05421612	0.
1	0916	279	0.	.0	1630.0	*	2	0730	946	0.	6.1	1639.0	*	3	05441613	0.
1	0918	280	0.	.0	1630.0	*	2	0732	947	0.	6.1	1639.0	*	3	05461614	0.
1	0920	281	0.	.0	1630.0	*	2	0734	948	0.	6.1	1639.0	*	3	05481615	0.
1	0922	282	0.	.0	1630.0	*	2	0736	949	0.	6.1	1639.0	*	3	05501616	0.
1	0924	283	0.	.0	1630.0	*	2	0738	950	0.	6.1	1639.0	*	3	05521617	0.
1	0926	284	0.	.0	1630.0	*	2	0740	951	0.	6.1	1639.0	*	3	05541618	0.
1	0928	285	0.	.0	1630.0	*	2	0742	952	0.	6.1	1639.0	*	3	05561619	0.
1	0930	286	0.	.0	1630.0	*	2	0744	953	0.	6.1	1639.0	*	3	05581620	0.
1	0932	287	0.	.0	1630.0	*	2	0746	954	0.	6.1	1639.0	*	3	06001621	0.
1	0934	288	0.	.0	1630.0	*	2	0748	955	0.	6.1	1639.0	*	3	06021622	0.
1	0936	289	0.	.0	1630.0	*	2	0750	956	0.	6.1	1639.0	*	3	06041623	0.
1	0938	290	0.	.0	1630.0	*	2	0752	957	0.	6.1	1639.0	*	3	06061624	0.
1	0940	291	0.	.0	1630.0	*	2	0754	958	0.	6.1	1639.0	*	3	06081625	0.
1	0942	292	0.	.0	1630.0	*	2	0756	959	0.	6.1	1639.0	*	3	06101626	0.
1	0944	293	0.	.0	1630.0	*	2	0758	960	0.	6.1	1639.0	*	3	06121627	0.
1	0946	294	0.	.0	1630.0	*	2	0800	961	0.	6.1	1639.0	*	3	06141628	0.
1	0948	295	0.	.0	1630.0	*	2	0802	962	0.	6.1	1639.0	*	3	06161629	0.
1	0950	296	0.	.0	1630.0	*	2	0804	963	0.	6.1	1639.0	*	3	06181630	0.
1	0952	297	0.	.0	1630.0	*	2	0806	964	0.	6.1	1639.0	*	3	06201631	0.
1	0954	298	0.	.0	1630.0	*	2	0808	965	0.	6.1	1639.0	*	3	06221632	0.
1	0956	299	0.	.0	1630.0	*	2	0810	966	0.	6.1	1639.0	*	3	06241633	0.
1	0958	300	0.	.0	1630.0	*	2	0812	967	0.	6.1	1639.0	*	3	06261634	0.
1	1000	301	0.	.0	1630.0	*	2	0814	968	0.	6.1	1639.0	*	3	06281635	0.
1	1002	302	0.	.0	1630.0	*	2	0816	969	0.	6.1	1639.0	*	3	06301636	0.
1	1004	303	0.	.0	1630.0	*	2	0818	970	0.	6.1	1639.0	*	3	06321637	0.
1	1006	304	0.	.0	1630.0	*	2	0820	971	0.	6.1	1639.0	*	3	06341638	0.
1	1008	305	0.	.0	1630.0	*	2	0822	972	0.	6.1	1639.0	*	3	06361639	0.
1	1010	306	0.	.0	1630.0	*	2	0824	973	0.	6.1	1639.0	*	3	06381640	0.
1	1012	307	0.	.0	1630.0	*	2	0826	974	0.	6.1	1639.0	*	3	06401641	0.
1	1014	308	0.	.0	1630.0	*	2	0828	975	0.	6.1	1639.0	*	3	06421642	0.
1	1016	309	0.	.0	1630.0	*	2	0830	976	0.	6.1	1639.0	*	3	06441643	0.
1	1018	310	0.	.0	1630.0	*	2	0832	977	0.	6.1	1639.0	*	3	06461644	0.
1	1020	311	0.	.0	1630.0	*	2	0834	978	0.	6.1	1639.0	*	3	06481645	0.
1	1022	312	0.	.0	1630.0	*	2	0836	979	0.	6.1	1639.0	*	3	06501646	0.

1	1024	313	0.	.0	1630.0	*	2	0838	980	0.	6.1	1639.0	*	3	06521647	0.
1	1026	314	0.	.0	1630.0	*	2	0840	981	0.	6.1	1639.0	*	3	06541648	0.
1	1028	315	0.	.0	1630.0	*	2	0842	982	0.	6.1	1639.0	*	3	06561649	0.
1	1030	316	0.	.0	1630.0	*	2	0844	983	0.	6.1	1639.0	*	3	06581650	0.
1	1032	317	0.	.0	1630.0	*	2	0846	984	0.	6.1	1639.0	*	3	07001651	0.
1	1034	318	0.	.0	1630.0	*	2	0848	985	0.	6.1	1639.0	*	3	07021652	0.
1	1036	319	0.	.0	1630.0	*	2	0850	986	0.	6.1	1639.0	*	3	07041653	0.
1	1038	320	0.	.0	1630.0	*	2	0852	987	0.	6.1	1639.0	*	3	07061654	0.
1	1040	321	0.	.0	1630.0	*	2	0854	988	0.	6.1	1639.0	*	3	07081655	0.
1	1042	322	0.	.0	1630.0	*	2	0856	989	0.	6.1	1639.0	*	3	07101656	0.
1	1044	323	0.	.0	1630.0	*	2	0858	990	0.	6.1	1639.0	*	3	07121657	0.
1	1046	324	0.	.0	1630.0	*	2	0900	991	0.	6.1	1639.0	*	3	07141658	0.
1	1048	325	0.	.0	1630.0	*	2	0902	992	0.	6.1	1639.0	*	3	07161659	0.
1	1050	326	0.	.0	1630.0	*	2	0904	993	0.	6.1	1639.0	*	3	07181660	0.
1	1052	327	0.	.0	1630.0	*	2	0906	994	0.	6.1	1639.0	*	3	07201661	0.
1	1054	328	0.	.0	1630.0	*	2	0908	995	0.	6.1	1639.0	*	3	07221662	0.
1	1056	329	0.	.0	1630.0	*	2	0910	996	0.	6.1	1639.0	*	3	07241663	0.
1	1058	330	0.	.0	1630.0	*	2	0912	997	0.	6.1	1639.0	*	3	07261664	0.
1	1100	331	0.	.0	1630.0	*	2	0914	998	0.	6.1	1639.0	*	3	07281665	0.
1	1102	332	0.	.0	1630.0	*	2	0916	999	0.	6.1	1639.0	*	3	07301666	0.
1	1104	333	0.	.0	1630.0	*	2	09181000		0.	6.1	1639.0	*	3	07321667	0.
1	1106	334	0.	.0	1630.0	*	2	09201001		0.	6.1	1639.0	*	3	07341668	0.
1	1108	335	0.	.0	1630.0	*	2	09221002		0.	6.1	1639.0	*	3	07361669	0.
1	1110	336	0.	.0	1630.0	*	2	09241003		0.	6.1	1639.0	*	3	07381670	0.
1	1112	337	0.	.0	1630.0	*	2	09261004		0.	6.1	1639.0	*	3	07401671	0.
1	1114	338	0.	.0	1630.0	*	2	09281005		0.	6.1	1639.0	*	3	07421672	0.
1	1116	339	0.	.0	1630.0	*	2	09301006		0.	6.1	1639.0	*	3	07441673	0.
1	1118	340	0.	.0	1630.0	*	2	09321007		0.	6.1	1639.0	*	3	07461674	0.
1	1120	341	0.	.0	1630.0	*	2	09341008		0.	6.1	1639.0	*	3	07481675	0.
1	1122	342	0.	.0	1630.0	*	2	09361009		0.	6.1	1639.0	*	3	07501676	0.
1	1124	343	0.	.0	1630.0	*	2	09381010		0.	6.1	1639.0	*	3	07521677	0.
1	1126	344	0.	.0	1630.0	*	2	09401011		0.	6.1	1639.0	*	3	07541678	0.
1	1128	345	0.	.0	1630.0	*	2	09421012		0.	6.1	1639.0	*	3	07561679	0.
1	1130	346	0.	.0	1630.0	*	2	09441013		0.	6.1	1639.0	*	3	07581680	0.
1	1132	347	0.	.0	1630.0	*	2	09461014		0.	6.1	1639.0	*	3	08001681	0.
1	1134	348	0.	.0	1630.0	*	2	09481015		0.	6.1	1639.0	*	3	08021682	0.
1	1136	349	0.	.0	1630.0	*	2	09501016		0.	6.1	1639.0	*	3	08041683	0.
1	1138	350	0.	.0	1630.0	*	2	09521017		0.	6.1	1639.0	*	3	08061684	0.
1	1140	351	0.	.0	1630.0	*	2	09541018		0.	6.1	1639.0	*	3	08081685	0.
1	1142	352	0.	.0	1630.0	*	2	09561019		0.	6.1	1639.0	*	3	08101686	0.
1	1144	353	0.	.0	1630.0	*	2	09581020		0.	6.1	1639.0	*	3	08121687	0.
1	1146	354	0.	.0	1630.0	*	2	10001021		0.	6.1	1639.0	*	3	08141688	0.
1	1148	355	0.	.0	1630.0	*	2	10021022		0.	6.1	1639.0	*	3	08161689	0.
1	1150	356	0.	.0	1630.0	*	2	10041023		0.	6.1	1639.0	*	3	08181690	0.
1	1152	357	0.	.0	1630.0	*	2	10061024		0.	6.1	1639.0	*	3	08201691	0.
1	1154	358	0.	.1	1630.5	*	2	10081025		0.	6.1	1639.0	*	3	08221692	0.
1	1156	359	0.	.3	1631.3	*	2	10101026		0.	6.1	1639.0	*	3	08241693	0.
1	1158	360	0.	.5	1632.1	*	2	10121027		0.	6.1	1639.0	*	3	08261694	0.
1	1200	361	0.	.9	1633.0	*	2	10141028		0.	6.1	1639.0	*	3	08281695	0.
1	1202	362	0.	1.4	1633.9	*	2	10161029		0.	6.1	1639.0	*	3	08301696	0.
1	1204	363	0.	2.0	1634.8	*	2	10181030		0.	6.1	1639.0	*	3	08321697	0.
1	1206	364	0.	2.6	1635.6	*	2	10201031		0.	6.1	1639.0	*	3	08341698	0.
1	1208	365	0.	3.3	1636.4	*	2	10221032		0.	6.1	1639.0	*	3	08361699	0.
1	1210	366	0.	4.0	1637.2	*	2	10241033		0.	6.1	1639.0	*	3	08381700	0.
1	1212	367	0.	4.8	1637.9	*	2	10261034		0.	6.1	1639.0	*	3	08401701	0.
1	1214	368	0.	5.5	1638.5	*	2	10281035		0.	6.1	1639.0	*	3	08421702	0.
1	1216	369	3.	6.2	1639.1	*	2	10301036		0.	6.1	1639.0	*	3	08441703	0.
1	1218	370	14.	6.9	1639.6	*	2	10321037		0.	6.1	1639.0	*	3	08461704	0.
1	1220	371	25.	7.5	1640.0	*	2	10341038		0.	6.1	1639.0	*	3	08481705	0.
1	1222	372	77.	7.9	1640.3	*	2	10361039		0.	6.1	1639.0	*	3	08501706	0.
1	1224	373	111.	8.2	1640.4	*	2	10381040		0.	6.1	1639.0	*	3	08521707	0.
1	1226	374	129.	8.3	1640.5	*	2	10401041		0.	6.1	1639.0	*	3	08541708	0.
1	1228	375	138.	8.4	1640.6	*	2	10421042		0.	6.1	1639.0	*	3	08561709	0.
1	1230	376	139.	8.4	1640.6	*	2	10441043		0.	6.1	1639.0	*	3	08581710	0.
1	1232	377	135.	8.4	1640.6	*	2	10461044		0.	6.1	1639.0	*	3	09001711	0.
1	1234	378	124.	8.3	1640.5	*	2	10481045		0.	6.1	1639.0	*	3	09021712	0.
1	1236	379	107.	8.1	1640.4	*	2	10501046		0.	6.1	1639.0	*	3	09041713	0.
1	1238	380	83.	7.9	1640.3	*	2	10521047		0.	6.1	1639.0	*	3	09061714	0.
1	1240	381	62.	7.8	1640.2	*	2	10541048		0.	6.1	1639.0	*	3	09081715	0.
1	1242	382	48.	7.7	1640.1	*	2	10561049		0.	6.1	1639.0	*	3	09101716	0.
1	1244	383	36.	7.6	1640.1	*	2	10581050		0.	6.1	1639.0	*	3	09121717	0.
1	1246	384	27.	7.5	1640.0	*	2	11001051		0.	6.1	1639.0	*	3	09141718	0.
1	1248	385	24.	7.4	1640.0	*	2	11021052		0.	6.1	1639.0	*	3	09161719	0.
1	1250	386	23.	7.4	1639.9	*	2	11041053		0.	6.1	1639.0	*	3	09181720	0.
1	1252	387	22.	7.3	1639.9	*	2	11061054		0.	6.1	1639.0	*	3	09201721	0.
1	1254	388	21.	7.3	1639.8	*	2	11081055		0.	6.1	1639.0	*	3	09221722	0.
1	1256	389	20.	7.2	1639.8	*	2	11101056		0.	6.1	1639.0	*	3	09241723	0.
1	1258	390	19.	7.1	1639.8	*	2	11121057		0.	6.1	1639.0	*	3	09261724	0.
1	1300	391	18.	7.1	1639.7	*	2	11141058		0.	6.1	1639.0	*	3	09281725	0.
1	1302	392	17.	7.0	1639.7	*	2	11161059		0.	6.1	1639.0	*	3	09301726	0.
1	1304	393	16.	7.0	1639.6	*	2	11181060		0.	6.1	1639.0	*	3	09321727	0.
1	1306	394	15.	7.0	1639.6	*	2	11201061		0.	6.1	1639.0	*	3	09341728	0.
1	1308	395	15.	6.9	1639.6	*	2	11221062		0.	6.1	1639.0	*	3	09361729	0.
1	1310	396	14.	6.9	1639.6	*	2	11241063		0.	6.1	1639.0	*	3	09381730	0.

1	1312	397	13.	6.8	1639.5	*	2	11261064	0.	6.1	1639.0	*	3	09401731	0.
1	1314	398	13.	6.8	1639.5	*	2	11281065	0.	6.1	1639.0	*	3	09421732	0.
1	1316	399	12.	6.8	1639.5	*	2	11301066	0.	6.1	1639.0	*	3	09441733	0.
1	1318	400	11.	6.7	1639.5	*	2	11321067	0.	6.1	1639.0	*	3	09461734	0.
1	1320	401	11.	6.7	1639.4	*	2	11341068	0.	6.1	1639.0	*	3	09481735	0.
1	1322	402	10.	6.7	1639.4	*	2	11361069	0.	6.1	1639.0	*	3	09501736	0.
1	1324	403	10.	6.6	1639.4	*	2	11381070	0.	6.1	1639.0	*	3	09521737	0.
1	1326	404	9.	6.6	1639.4	*	2	11401071	0.	6.1	1639.0	*	3	09541738	0.
1	1328	405	9.	6.6	1639.4	*	2	11421072	0.	6.1	1639.0	*	3	09561739	0.
1	1330	406	9.	6.6	1639.3	*	2	11441073	0.	6.1	1639.0	*	3	09581740	0.
1	1332	407	8.	6.6	1639.3	*	2	11461074	0.	6.1	1639.0	*	3	10001741	0.
1	1334	408	8.	6.5	1639.3	*	2	11481075	0.	6.1	1639.0	*	3	10021742	0.
1	1336	409	7.	6.5	1639.3	*	2	11501076	0.	6.1	1639.0	*	3	10041743	0.
1	1338	410	7.	6.5	1639.3	*	2	11521077	0.	6.1	1639.0	*	3	10061744	0.
1	1340	411	7.	6.5	1639.3	*	2	11541078	0.	6.1	1639.0	*	3	10081745	0.
1	1342	412	6.	6.5	1639.3	*	2	11561079	0.	6.1	1639.0	*	3	10101746	0.
1	1344	413	6.	6.4	1639.2	*	2	11581080	0.	6.1	1639.0	*	3	10121747	0.
1	1346	414	6.	6.4	1639.2	*	2	12001081	0.	6.1	1639.0	*	3	10141748	0.
1	1348	415	5.	6.4	1639.2	*	2	12021082	0.	6.1	1639.0	*	3	10161749	0.
1	1350	416	5.	6.4	1639.2	*	2	12041083	0.	6.1	1639.0	*	3	10181750	0.
1	1352	417	5.	6.4	1639.2	*	2	12061084	0.	6.1	1639.0	*	3	10201751	0.
1	1354	418	5.	6.4	1639.2	*	2	12081085	0.	6.1	1639.0	*	3	10221752	0.
1	1356	419	4.	6.3	1639.2	*	2	12101086	0.	6.1	1639.0	*	3	10241753	0.
1	1358	420	4.	6.3	1639.2	*	2	12121087	0.	6.1	1639.0	*	3	10261754	0.
1	1400	421	4.	6.3	1639.2	*	2	12141088	0.	6.1	1639.0	*	3	10281755	0.
1	1402	422	4.	6.3	1639.2	*	2	12161089	0.	6.1	1639.0	*	3	10301756	0.
1	1404	423	4.	6.3	1639.1	*	2	12181090	0.	6.1	1639.0	*	3	10321757	0.
1	1406	424	3.	6.3	1639.1	*	2	12201091	0.	6.1	1639.0	*	3	10341758	0.
1	1408	425	3.	6.3	1639.1	*	2	12221092	0.	6.1	1639.0	*	3	10361759	0.
1	1410	426	3.	6.3	1639.1	*	2	12241093	0.	6.1	1639.0	*	3	10381760	0.
1	1412	427	3.	6.3	1639.1	*	2	12261094	0.	6.1	1639.0	*	3	10401761	0.
1	1414	428	3.	6.3	1639.1	*	2	12281095	0.	6.1	1639.0	*	3	10421762	0.
1	1416	429	3.	6.3	1639.1	*	2	12301096	0.	6.1	1639.0	*	3	10441763	0.
1	1418	430	3.	6.2	1639.1	*	2	12321097	0.	6.1	1639.0	*	3	10461764	0.
1	1420	431	2.	6.2	1639.1	*	2	12341098	0.	6.1	1639.0	*	3	10481765	0.
1	1422	432	2.	6.2	1639.1	*	2	12361099	0.	6.1	1639.0	*	3	10501766	0.
1	1424	433	2.	6.2	1639.1	*	2	12381100	0.	6.1	1639.0	*	3	10521767	0.
1	1426	434	2.	6.2	1639.1	*	2	12401101	0.	6.1	1639.0	*	3	10541768	0.
1	1428	435	2.	6.2	1639.1	*	2	12421102	0.	6.1	1639.0	*	3	10561769	0.
1	1430	436	2.	6.2	1639.1	*	2	12441103	0.	6.1	1639.0	*	3	10581770	0.
1	1432	437	2.	6.2	1639.1	*	2	12461104	0.	6.1	1639.0	*	3	11001771	0.
1	1434	438	2.	6.2	1639.1	*	2	12481105	0.	6.1	1639.0	*	3	11021772	0.
1	1436	439	2.	6.2	1639.1	*	2	12501106	0.	6.1	1639.0	*	3	11041773	0.
1	1438	440	2.	6.2	1639.1	*	2	12521107	0.	6.1	1639.0	*	3	11061774	0.
1	1440	441	2.	6.2	1639.1	*	2	12541108	0.	6.1	1639.0	*	3	11081775	0.
1	1442	442	1.	6.2	1639.1	*	2	12561109	0.	6.1	1639.0	*	3	11101776	0.
1	1444	443	1.	6.2	1639.1	*	2	12581110	0.	6.1	1639.0	*	3	11121777	0.
1	1446	444	1.	6.2	1639.1	*	2	13001111	0.	6.1	1639.0	*	3	11141778	0.
1	1448	445	1.	6.2	1639.0	*	2	13021112	0.	6.1	1639.0	*	3	11161779	0.
1	1450	446	1.	6.2	1639.0	*	2	13041113	0.	6.1	1639.0	*	3	11181780	0.
1	1452	447	1.	6.2	1639.0	*	2	13061114	0.	6.1	1639.0	*	3	11201781	0.
1	1454	448	1.	6.2	1639.0	*	2	13081115	0.	6.1	1639.0	*	3	11221782	0.
1	1456	449	1.	6.2	1639.0	*	2	13101116	0.	6.1	1639.0	*	3	11241783	0.
1	1458	450	1.	6.2	1639.0	*	2	13121117	0.	6.1	1639.0	*	3	11261784	0.
1	1500	451	1.	6.2	1639.0	*	2	13141118	0.	6.1	1639.0	*	3	11281785	0.
1	1502	452	1.	6.1	1639.0	*	2	13161119	0.	6.1	1639.0	*	3	11301786	0.
1	1504	453	1.	6.1	1639.0	*	2	13181120	0.	6.1	1639.0	*	3	11321787	0.
1	1506	454	1.	6.1	1639.0	*	2	13201121	0.	6.1	1639.0	*	3	11341788	0.
1	1508	455	1.	6.1	1639.0	*	2	13221122	0.	6.1	1639.0	*	3	11361789	0.
1	1510	456	1.	6.1	1639.0	*	2	13241123	0.	6.1	1639.0	*	3	11381790	0.
1	1512	457	1.	6.1	1639.0	*	2	13261124	0.	6.1	1639.0	*	3	11401791	0.
1	1514	458	1.	6.1	1639.0	*	2	13281125	0.	6.1	1639.0	*	3	11421792	0.
1	1516	459	1.	6.1	1639.0	*	2	13301126	0.	6.1	1639.0	*	3	11441793	0.
1	1518	460	1.	6.1	1639.0	*	2	13321127	0.	6.1	1639.0	*	3	11461794	0.
1	1520	461	1.	6.1	1639.0	*	2	13341128	0.	6.1	1639.0	*	3	11481795	0.
1	1522	462	1.	6.1	1639.0	*	2	13361129	0.	6.1	1639.0	*	3	11501796	0.
1	1524	463	1.	6.1	1639.0	*	2	13381130	0.	6.1	1639.0	*	3	11521797	0.
1	1526	464	0.	6.1	1639.0	*	2	13401131	0.	6.1	1639.0	*	3	11541798	0.
1	1528	465	0.	6.1	1639.0	*	2	13421132	0.	6.1	1639.0	*	3	11561799	0.
1	1530	466	0.	6.1	1639.0	*	2	13441133	0.	6.1	1639.0	*	3	11581800	0.
1	1532	467	0.	6.1	1639.0	*	2	13461134	0.	6.1	1639.0	*	3	12001801	0.
1	1534	468	0.	6.1	1639.0	*	2	13481135	0.	6.1	1639.0	*	3	12021802	0.
1	1536	469	0.	6.1	1639.0	*	2	13501136	0.	6.1	1639.0	*	3	12041803	0.
1	1538	470	0.	6.1	1639.0	*	2	13521137	0.	6.1	1639.0	*	3	12061804	0.
1	1540	471	0.	6.1	1639.0	*	2	13541138	0.	6.1	1639.0	*	3	12081805	0.
1	1542	472	0.	6.1	1639.0	*	2	13561139	0.	6.1	1639.0	*	3	12101806	0.
1	1544	473	0.	6.1	1639.0	*	2	13581140	0.	6.1	1639.0	*	3	12121807	0.
1	1546	474	0.	6.1	1639.0	*	2	14001141	0.	6.1	1639.0	*	3	12141808	0.
1	1548	475	0.	6.1	1639.0	*	2	14021142	0.	6.1	1639.0	*	3	12161809	0.
1	1550	476	0.	6.1	1639.0	*	2	14041143	0.	6.1	1639.0	*	3	12181810	0.
1	1552	477	0.	6.1	1639.0	*	2	14061144	0.	6.1	1639.0	*	3	12201811	0.
1	1554	478	0.	6.1	1639.0	*	2	14081145	0.	6.1	1639.0	*	3	12221812	0.
1	1556	479	0.	6.1	1639.0	*	2	14101146	0.	6.1	1639.0	*	3	12241813	0.
1	1558	480	0.	6.1	1639.0	*	2	14121147	0.	6.1	1639.0	*	3	12261814	0.

1	1600	481	0.	6.1	1639.0	*	2	14141148	0.	6.1	1639.0	*	3	12281815	0.
1	1602	482	0.	6.1	1639.0	*	2	14161149	0.	6.1	1639.0	*	3	12301816	0.
1	1604	483	0.	6.1	1639.0	*	2	14181150	0.	6.1	1639.0	*	3	12321817	0.
1	1606	484	0.	6.1	1639.0	*	2	14201151	0.	6.1	1639.0	*	3	12341818	0.
1	1608	485	0.	6.1	1639.0	*	2	14221152	0.	6.1	1639.0	*	3	12361819	0.
1	1610	486	0.	6.1	1639.0	*	2	14241153	0.	6.1	1639.0	*	3	12381820	0.
1	1612	487	0.	6.1	1639.0	*	2	14261154	0.	6.1	1639.0	*	3	12401821	0.
1	1614	488	0.	6.1	1639.0	*	2	14281155	0.	6.1	1639.0	*	3	12421822	0.
1	1616	489	0.	6.1	1639.0	*	2	14301156	0.	6.1	1639.0	*	3	12441823	0.
1	1618	490	0.	6.1	1639.0	*	2	14321157	0.	6.1	1639.0	*	3	12461824	0.
1	1620	491	0.	6.1	1639.0	*	2	14341158	0.	6.1	1639.0	*	3	12481825	0.
1	1622	492	0.	6.1	1639.0	*	2	14361159	0.	6.1	1639.0	*	3	12501826	0.
1	1624	493	0.	6.1	1639.0	*	2	14381160	0.	6.1	1639.0	*	3	12521827	0.
1	1626	494	0.	6.1	1639.0	*	2	14401161	0.	6.1	1639.0	*	3	12541828	0.
1	1628	495	0.	6.1	1639.0	*	2	14421162	0.	6.1	1639.0	*	3	12561829	0.
1	1630	496	0.	6.1	1639.0	*	2	14441163	0.	6.1	1639.0	*	3	12581830	0.
1	1632	497	0.	6.1	1639.0	*	2	14461164	0.	6.1	1639.0	*	3	13001831	0.
1	1634	498	0.	6.1	1639.0	*	2	14481165	0.	6.1	1639.0	*	3	13021832	0.
1	1636	499	0.	6.1	1639.0	*	2	14501166	0.	6.1	1639.0	*	3	13041833	0.
1	1638	500	0.	6.1	1639.0	*	2	14521167	0.	6.1	1639.0	*	3	13061834	0.
1	1640	501	0.	6.1	1639.0	*	2	14541168	0.	6.1	1639.0	*	3	13081835	0.
1	1642	502	0.	6.1	1639.0	*	2	14561169	0.	6.1	1639.0	*	3	13101836	0.
1	1644	503	0.	6.1	1639.0	*	2	14581170	0.	6.1	1639.0	*	3	13121837	0.
1	1646	504	0.	6.1	1639.0	*	2	15001171	0.	6.1	1639.0	*	3	13141838	0.
1	1648	505	0.	6.1	1639.0	*	2	15021172	0.	6.1	1639.0	*	3	13161839	0.
1	1650	506	0.	6.1	1639.0	*	2	15041173	0.	6.1	1639.0	*	3	13181840	0.
1	1652	507	0.	6.1	1639.0	*	2	15061174	0.	6.1	1639.0	*	3	13201841	0.
1	1654	508	0.	6.1	1639.0	*	2	15081175	0.	6.1	1639.0	*	3	13221842	0.
1	1656	509	0.	6.1	1639.0	*	2	15101176	0.	6.1	1639.0	*	3	13241843	0.
1	1658	510	0.	6.1	1639.0	*	2	15121177	0.	6.1	1639.0	*	3	13261844	0.
1	1700	511	0.	6.1	1639.0	*	2	15141178	0.	6.1	1639.0	*	3	13281845	0.
1	1702	512	0.	6.1	1639.0	*	2	15161179	0.	6.1	1639.0	*	3	13301846	0.
1	1704	513	0.	6.1	1639.0	*	2	15181180	0.	6.1	1639.0	*	3	13321847	0.
1	1706	514	0.	6.1	1639.0	*	2	15201181	0.	6.1	1639.0	*	3	13341848	0.
1	1708	515	0.	6.1	1639.0	*	2	15221182	0.	6.1	1639.0	*	3	13361849	0.
1	1710	516	0.	6.1	1639.0	*	2	15241183	0.	6.1	1639.0	*	3	13381850	0.
1	1712	517	0.	6.1	1639.0	*	2	15261184	0.	6.1	1639.0	*	3	13401851	0.
1	1714	518	0.	6.1	1639.0	*	2	15281185	0.	6.1	1639.0	*	3	13421852	0.
1	1716	519	0.	6.1	1639.0	*	2	15301186	0.	6.1	1639.0	*	3	13441853	0.
1	1718	520	0.	6.1	1639.0	*	2	15321187	0.	6.1	1639.0	*	3	13461854	0.
1	1720	521	0.	6.1	1639.0	*	2	15341188	0.	6.1	1639.0	*	3	13481855	0.
1	1722	522	0.	6.1	1639.0	*	2	15361189	0.	6.1	1639.0	*	3	13501856	0.
1	1724	523	0.	6.1	1639.0	*	2	15381190	0.	6.1	1639.0	*	3	13521857	0.
1	1726	524	0.	6.1	1639.0	*	2	15401191	0.	6.1	1639.0	*	3	13541858	0.
1	1728	525	0.	6.1	1639.0	*	2	15421192	0.	6.1	1639.0	*	3	13561859	0.
1	1730	526	0.	6.1	1639.0	*	2	15441193	0.	6.1	1639.0	*	3	13581860	0.
1	1732	527	0.	6.1	1639.0	*	2	15461194	0.	6.1	1639.0	*	3	14001861	0.
1	1734	528	0.	6.1	1639.0	*	2	15481195	0.	6.1	1639.0	*	3	14021862	0.
1	1736	529	0.	6.1	1639.0	*	2	15501196	0.	6.1	1639.0	*	3	14041863	0.
1	1738	530	0.	6.1	1639.0	*	2	15521197	0.	6.1	1639.0	*	3	14061864	0.
1	1740	531	0.	6.1	1639.0	*	2	15541198	0.	6.1	1639.0	*	3	14081865	0.
1	1742	532	0.	6.1	1639.0	*	2	15561199	0.	6.1	1639.0	*	3	14101866	0.
1	1744	533	0.	6.1	1639.0	*	2	15581200	0.	6.1	1639.0	*	3	14121867	0.
1	1746	534	0.	6.1	1639.0	*	2	16001201	0.	6.1	1639.0	*	3	14141868	0.
1	1748	535	0.	6.1	1639.0	*	2	16021202	0.	6.1	1639.0	*	3	14161869	0.
1	1750	536	0.	6.1	1639.0	*	2	16041203	0.	6.1	1639.0	*	3	14181870	0.
1	1752	537	0.	6.1	1639.0	*	2	16061204	0.	6.1	1639.0	*	3	14201871	0.
1	1754	538	0.	6.1	1639.0	*	2	16081205	0.	6.1	1639.0	*	3	14221872	0.
1	1756	539	0.	6.1	1639.0	*	2	16101206	0.	6.1	1639.0	*	3	14241873	0.
1	1758	540	0.	6.1	1639.0	*	2	16121207	0.	6.1	1639.0	*	3	14261874	0.
1	1800	541	0.	6.1	1639.0	*	2	16141208	0.	6.1	1639.0	*	3	14281875	0.
1	1802	542	0.	6.1	1639.0	*	2	16161209	0.	6.1	1639.0	*	3	14301876	0.
1	1804	543	0.	6.1	1639.0	*	2	16181210	0.	6.1	1639.0	*	3	14321877	0.
1	1806	544	0.	6.1	1639.0	*	2	16201211	0.	6.1	1639.0	*	3	14341878	0.
1	1808	545	0.	6.1	1639.0	*	2	16221212	0.	6.1	1639.0	*	3	14361879	0.
1	1810	546	0.	6.1	1639.0	*	2	16241213	0.	6.1	1639.0	*	3	14381880	0.
1	1812	547	0.	6.1	1639.0	*	2	16261214	0.	6.1	1639.0	*	3	14401881	0.
1	1814	548	0.	6.1	1639.0	*	2	16281215	0.	6.1	1639.0	*	3	14421882	0.
1	1816	549	0.	6.1	1639.0	*	2	16301216	0.	6.1	1639.0	*	3	14441883	0.
1	1818	550	0.	6.1	1639.0	*	2	16321217	0.	6.1	1639.0	*	3	14461884	0.
1	1820	551	0.	6.1	1639.0	*	2	16341218	0.	6.1	1639.0	*	3	14481885	0.
1	1822	552	0.	6.1	1639.0	*	2	16361219	0.	6.1	1639.0	*	3	14501886	0.
1	1824	553	0.	6.1	1639.0	*	2	16381220	0.	6.1	1639.0	*	3	14521887	0.
1	1826	554	0.	6.1	1639.0	*	2	16401221	0.	6.1	1639.0	*	3	14541888	0.
1	1828	555	0.	6.1	1639.0	*	2	16421222	0.	6.1	1639.0	*	3	14561889	0.
1	1830	556	0.	6.1	1639.0	*	2	16441223	0.	6.1	1639.0	*	3	14581890	0.
1	1832	557	0.	6.1	1639.0	*	2	16461224	0.	6.1	1639.0	*	3	15001891	0.
1	1834	558	0.	6.1	1639.0	*	2	16481225	0.	6.1	1639.0	*	3	15021892	0.
1	1836	559	0.	6.1	1639.0	*	2	16501226	0.	6.1	1639.0	*	3	15041893	0.
1	1838	560	0.	6.1	1639.0	*	2	16521227	0.	6.1	1639.0	*	3	15061894	0.
1	1840	561	0.	6.1	1639.0	*	2	16541228	0.	6.1	1639.0	*	3	15081895	0.
1	1842	562	0.	6.1	1639.0	*	2	16561229	0.	6.1	1639.0	*	3	15101896	0.
1	1844	563	0.	6.1	1639.0	*	2	16581230	0.	6.1	1639.0	*	3	15121897	0.
1	1846	564	0.	6.1	1639.0	*	2	17001231	0.	6.1	1639.0	*	3	15141898	0.

1	1848	565	0.	6.1	1639.0	*	2	17021232	0.	6.1	1639.0	*	3	15161899	0.
1	1850	566	0.	6.1	1639.0	*	2	17041233	0.	6.1	1639.0	*	3	15181900	0.
1	1852	567	0.	6.1	1639.0	*	2	17061234	0.	6.1	1639.0	*	3	15201901	0.
1	1854	568	0.	6.1	1639.0	*	2	17081235	0.	6.1	1639.0	*	3	15221902	0.
1	1856	569	0.	6.1	1639.0	*	2	17101236	0.	6.1	1639.0	*	3	15241903	0.
1	1858	570	0.	6.1	1639.0	*	2	17121237	0.	6.1	1639.0	*	3	15261904	0.
1	1900	571	0.	6.1	1639.0	*	2	17141238	0.	6.1	1639.0	*	3	15281905	0.
1	1902	572	0.	6.1	1639.0	*	2	17161239	0.	6.1	1639.0	*	3	15301906	0.
1	1904	573	0.	6.1	1639.0	*	2	17181240	0.	6.1	1639.0	*	3	15321907	0.
1	1906	574	0.	6.1	1639.0	*	2	17201241	0.	6.1	1639.0	*	3	15341908	0.
1	1908	575	0.	6.1	1639.0	*	2	17221242	0.	6.1	1639.0	*	3	15361909	0.
1	1910	576	0.	6.1	1639.0	*	2	17241243	0.	6.1	1639.0	*	3	15381910	0.
1	1912	577	0.	6.1	1639.0	*	2	17261244	0.	6.1	1639.0	*	3	15401911	0.
1	1914	578	0.	6.1	1639.0	*	2	17281245	0.	6.1	1639.0	*	3	15421912	0.
1	1916	579	0.	6.1	1639.0	*	2	17301246	0.	6.1	1639.0	*	3	15441913	0.
1	1918	580	0.	6.1	1639.0	*	2	17321247	0.	6.1	1639.0	*	3	15461914	0.
1	1920	581	0.	6.1	1639.0	*	2	17341248	0.	6.1	1639.0	*	3	15481915	0.
1	1922	582	0.	6.1	1639.0	*	2	17361249	0.	6.1	1639.0	*	3	15501916	0.
1	1924	583	0.	6.1	1639.0	*	2	17381250	0.	6.1	1639.0	*	3	15521917	0.
1	1926	584	0.	6.1	1639.0	*	2	17401251	0.	6.1	1639.0	*	3	15541918	0.
1	1928	585	0.	6.1	1639.0	*	2	17421252	0.	6.1	1639.0	*	3	15561919	0.
1	1930	586	0.	6.1	1639.0	*	2	17441253	0.	6.1	1639.0	*	3	15581920	0.
1	1932	587	0.	6.1	1639.0	*	2	17461254	0.	6.1	1639.0	*	3	16001921	0.
1	1934	588	0.	6.1	1639.0	*	2	17481255	0.	6.1	1639.0	*	3	16021922	0.
1	1936	589	0.	6.1	1639.0	*	2	17501256	0.	6.1	1639.0	*	3	16041923	0.
1	1938	590	0.	6.1	1639.0	*	2	17521257	0.	6.1	1639.0	*	3	16061924	0.
1	1940	591	0.	6.1	1639.0	*	2	17541258	0.	6.1	1639.0	*	3	16081925	0.
1	1942	592	0.	6.1	1639.0	*	2	17561259	0.	6.1	1639.0	*	3	16101926	0.
1	1944	593	0.	6.1	1639.0	*	2	17581260	0.	6.1	1639.0	*	3	16121927	0.
1	1946	594	0.	6.1	1639.0	*	2	18001261	0.	6.1	1639.0	*	3	16141928	0.
1	1948	595	0.	6.1	1639.0	*	2	18021262	0.	6.1	1639.0	*	3	16161929	0.
1	1950	596	0.	6.1	1639.0	*	2	18041263	0.	6.1	1639.0	*	3	16181930	0.
1	1952	597	0.	6.1	1639.0	*	2	18061264	0.	6.1	1639.0	*	3	16201931	0.
1	1954	598	0.	6.1	1639.0	*	2	18081265	0.	6.1	1639.0	*	3	16221932	0.
1	1956	599	0.	6.1	1639.0	*	2	18101266	0.	6.1	1639.0	*	3	16241933	0.
1	1958	600	0.	6.1	1639.0	*	2	18121267	0.	6.1	1639.0	*	3	16261934	0.
1	2000	601	0.	6.1	1639.0	*	2	18141268	0.	6.1	1639.0	*	3	16281935	0.
1	2002	602	0.	6.1	1639.0	*	2	18161269	0.	6.1	1639.0	*	3	16301936	0.
1	2004	603	0.	6.1	1639.0	*	2	18181270	0.	6.1	1639.0	*	3	16321937	0.
1	2006	604	0.	6.1	1639.0	*	2	18201271	0.	6.1	1639.0	*	3	16341938	0.
1	2008	605	0.	6.1	1639.0	*	2	18221272	0.	6.1	1639.0	*	3	16361939	0.
1	2010	606	0.	6.1	1639.0	*	2	18241273	0.	6.1	1639.0	*	3	16381940	0.
1	2012	607	0.	6.1	1639.0	*	2	18261274	0.	6.1	1639.0	*	3	16401941	0.
1	2014	608	0.	6.1	1639.0	*	2	18281275	0.	6.1	1639.0	*	3	16421942	0.
1	2016	609	0.	6.1	1639.0	*	2	18301276	0.	6.1	1639.0	*	3	16441943	0.
1	2018	610	0.	6.1	1639.0	*	2	18321277	0.	6.1	1639.0	*	3	16461944	0.
1	2020	611	0.	6.1	1639.0	*	2	18341278	0.	6.1	1639.0	*	3	16481945	0.
1	2022	612	0.	6.1	1639.0	*	2	18361279	0.	6.1	1639.0	*	3	16501946	0.
1	2024	613	0.	6.1	1639.0	*	2	18381280	0.	6.1	1639.0	*	3	16521947	0.
1	2026	614	0.	6.1	1639.0	*	2	18401281	0.	6.1	1639.0	*	3	16541948	0.
1	2028	615	0.	6.1	1639.0	*	2	18421282	0.	6.1	1639.0	*	3	16561949	0.
1	2030	616	0.	6.1	1639.0	*	2	18441283	0.	6.1	1639.0	*	3	16581950	0.
1	2032	617	0.	6.1	1639.0	*	2	18461284	0.	6.1	1639.0	*	3	17001951	0.
1	2034	618	0.	6.1	1639.0	*	2	18481285	0.	6.1	1639.0	*	3	17021952	0.
1	2036	619	0.	6.1	1639.0	*	2	18501286	0.	6.1	1639.0	*	3	17041953	0.
1	2038	620	0.	6.1	1639.0	*	2	18521287	0.	6.1	1639.0	*	3	17061954	0.
1	2040	621	0.	6.1	1639.0	*	2	18541288	0.	6.1	1639.0	*	3	17081955	0.
1	2042	622	0.	6.1	1639.0	*	2	18561289	0.	6.1	1639.0	*	3	17101956	0.
1	2044	623	0.	6.1	1639.0	*	2	18581290	0.	6.1	1639.0	*	3	17121957	0.
1	2046	624	0.	6.1	1639.0	*	2	19001291	0.	6.1	1639.0	*	3	17141958	0.
1	2048	625	0.	6.1	1639.0	*	2	19021292	0.	6.1	1639.0	*	3	17161959	0.
1	2050	626	0.	6.1	1639.0	*	2	19041293	0.	6.1	1639.0	*	3	17181960	0.
1	2052	627	0.	6.1	1639.0	*	2	19061294	0.	6.1	1639.0	*	3	17201961	0.
1	2054	628	0.	6.1	1639.0	*	2	19081295	0.	6.1	1639.0	*	3	17221962	0.
1	2056	629	0.	6.1	1639.0	*	2	19101296	0.	6.1	1639.0	*	3	17241963	0.
1	2058	630	0.	6.1	1639.0	*	2	19121297	0.	6.1	1639.0	*	3	17261964	0.
1	2100	631	0.	6.1	1639.0	*	2	19141298	0.	6.1	1639.0	*	3	17281965	0.
1	2102	632	0.	6.1	1639.0	*	2	19161299	0.	6.1	1639.0	*	3	17301966	0.
1	2104	633	0.	6.1	1639.0	*	2	19181300	0.	6.1	1639.0	*	3	17321967	0.
1	2106	634	0.	6.1	1639.0	*	2	19201301	0.	6.1	1639.0	*	3	17341968	0.
1	2108	635	0.	6.1	1639.0	*	2	19221302	0.	6.1	1639.0	*	3	17361969	0.
1	2110	636	0.	6.1	1639.0	*	2	19241303	0.	6.1	1639.0	*	3	17381970	0.
1	2112	637	0.	6.1	1639.0	*	2	19261304	0.	6.1	1639.0	*	3	17401971	0.
1	2114	638	0.	6.1	1639.0	*	2	19281305	0.	6.1	1639.0	*	3	17421972	0.
1	2116	639	0.	6.1	1639.0	*	2	19301306	0.	6.1	1639.0	*	3	17441973	0.
1	2118	640	0.	6.1	1639.0	*	2	19321307	0.	6.1	1639.0	*	3	17461974	0.
1	2120	641	0.	6.1	1639.0	*	2	19341308	0.	6.1	1639.0	*	3	17481975	0.
1	2122	642	0.	6.1	1639.0	*	2	19361309	0.	6.1	1639.0	*	3	17501976	0.
1	2124	643	0.	6.1	1639.0	*	2	19381310	0.	6.1	1639.0	*	3	17521977	0.
1	2126	644	0.	6.1	1639.0	*	2	19401311	0.	6.1	1639.0	*	3	17541978	0.
1	2128	645	0.	6.1	1639.0	*	2	19421312	0.	6.1	1639.0	*	3	17561979	0.
1	2130	646	0.	6.1	1639.0	*	2	19441313	0.	6.1	1639.0	*	3	17581980	0.
1	2132	647	0.	6.1	1639.0	*	2	19461314	0.	6.1	1639.0	*	3	18001981	0.
1	2134	648	0.	6.1	1639.0	*	2	19481315	0.	6.1	1639.0	*	3	18021982	0.

1	2136	649	0.	6.1	1639.0	*	2	19501316	0.	6.1	1639.0	*	3	18041983	0.
1	2138	650	0.	6.1	1639.0	*	2	19521317	0.	6.1	1639.0	*	3	18061984	0.
1	2140	651	0.	6.1	1639.0	*	2	19541318	0.	6.1	1639.0	*	3	18081985	0.
1	2142	652	0.	6.1	1639.0	*	2	19561319	0.	6.1	1639.0	*	3	18101986	0.
1	2144	653	0.	6.1	1639.0	*	2	19581320	0.	6.1	1639.0	*	3	18121987	0.
1	2146	654	0.	6.1	1639.0	*	2	20001321	0.	6.1	1639.0	*	3	18141988	0.
1	2148	655	0.	6.1	1639.0	*	2	20021322	0.	6.1	1639.0	*	3	18161989	0.
1	2150	656	0.	6.1	1639.0	*	2	20041323	0.	6.1	1639.0	*	3	18181990	0.
1	2152	657	0.	6.1	1639.0	*	2	20061324	0.	6.1	1639.0	*	3	18201991	0.
1	2154	658	0.	6.1	1639.0	*	2	20081325	0.	6.1	1639.0	*	3	18221992	0.
1	2156	659	0.	6.1	1639.0	*	2	20101326	0.	6.1	1639.0	*	3	18241993	0.
1	2158	660	0.	6.1	1639.0	*	2	20121327	0.	6.1	1639.0	*	3	18261994	0.
1	2200	661	0.	6.1	1639.0	*	2	20141328	0.	6.1	1639.0	*	3	18281995	0.
1	2202	662	0.	6.1	1639.0	*	2	20161329	0.	6.1	1639.0	*	3	18301996	0.
1	2204	663	0.	6.1	1639.0	*	2	20181330	0.	6.1	1639.0	*	3	18321997	0.
1	2206	664	0.	6.1	1639.0	*	2	20201331	0.	6.1	1639.0	*	3	18341998	0.
1	2208	665	0.	6.1	1639.0	*	2	20221332	0.	6.1	1639.0	*	3	18361999	0.
1	2210	666	0.	6.1	1639.0	*	2	20241333	0.	6.1	1639.0	*	3	18382000	0.
1	2212	667	0.	6.1	1639.0	*	2	20261334	0.	6.1	1639.0	*			

****

PEAK FLOW	TIME		MAXIMUM AVERAGE FLOW			
			6-HR	24-HR	72-HR	66.63-HR
+ (CFS)	(HR)					
		(CFS)				
+ 139.	12.50		10.	2.	1.	1.
		(INCHES)	.057	.057	.057	.057
		(AC-FT)	5.	5.	5.	5.

PEAK STORAGE	TIME	MAXIMUM AVERAGE STORAGE			
		6-HR	24-HR	72-HR	66.63-HR
+ (AC-FT)	(HR)				
8.	12.50	6.	6.	5.	5.

PEAK STAGE	TIME	MAXIMUM AVERAGE STAGE			
		6-HR	24-HR	72-HR	66.63-HR
+ (FEET)	(HR)				
1640.57	12.50	1639.22	1639.05	1637.39	1637.39

CUMULATIVE AREA = 1.59 SQ MI

****

HYDROGRAPH AT SMCDB
TRANSPOSITION AREA 10.7 SQ MI

****

DA	MON	HRMN	ORD	OUTFLOW	STORAGE	STAGE	*	DA	MON	HRMN	ORD	OUTFLOW	STORAGE	STAGE	*	DA	MON	HRMN	ORD	OUTFLOW	STOR
1		0000	1	0.	.0	1630.0	*	1		2214	668	0.	6.1	1639.0	*	2		20281335		0.	
1		0002	2	0.	.0	1630.0	*	1		2216	669	0.	6.1	1639.0	*	2		20301336		0.	
1		0004	3	0.	.0	1630.0	*	1		2218	670	0.	6.1	1639.0	*	2		20321337		0.	
1		0006	4	0.	.0	1630.0	*	1		2220	671	0.	6.1	1639.0	*	2		20341338		0.	
1		0008	5	0.	.0	1630.0	*	1		2222	672	0.	6.1	1639.0	*	2		20361339		0.	
1		0010	6	0.	.0	1630.0	*	1		2224	673	0.	6.1	1639.0	*	2		20381340		0.	
1		0012	7	0.	.0	1630.0	*	1		2226	674	0.	6.1	1639.0	*	2		20401341		0.	
1		0014	8	0.	.0	1630.0	*	1		2228	675	0.	6.1	1639.0	*	2		20421342		0.	
1		0016	9	0.	.0	1630.0	*	1		2230	676	0.	6.1	1639.0	*	2		20441343		0.	
1		0018	10	0.	.0	1630.0	*	1		2232	677	0.	6.1	1639.0	*	2		20461344		0.	
1		0020	11	0.	.0	1630.0	*	1		2234	678	0.	6.1	1639.0	*	2		20481345		0.	
1		0022	12	0.	.0	1630.0	*	1		2236	679	0.	6.1	1639.0	*	2		20501346		0.	
1		0024	13	0.	.0	1630.0	*	1		2238	680	0.	6.1	1639.0	*	2		20521347		0.	
1		0026	14	0.	.0	1630.0	*	1		2240	681	0.	6.1	1639.0	*	2		20541348		0.	
1		0028	15	0.	.0	1630.0	*	1		2242	682	0.	6.1	1639.0	*	2		20561349		0.	
1		0030	16	0.	.0	1630.0	*	1		2244	683	0.	6.1	1639.0	*	2		20581350		0.	
1		0032	17	0.	.0	1630.0	*	1		2246	684	0.	6.1	1639.0	*	2		21001351		0.	
1		0034	18	0.	.0	1630.0	*	1		2248	685	0.	6.1	1639.0	*	2		21021352		0.	
1		0036	19	0.	.0	1630.0	*	1		2250	686	0.	6.1	1639.0	*	2		21041353		0.	
1		0038	20	0.	.0	1630.0	*	1		2252	687	0.	6.1	1639.0	*	2		21061354		0.	
1		0040	21	0.	.0	1630.0	*	1		2254	688	0.	6.1	1639.0	*	2		21081355		0.	
1		0042	22	0.	.0	1630.0	*	1		2256	689	0.	6.1	1639.0	*	2		21101356		0.	
1		0044	23	0.	.0	1630.0	*	1		2258	690	0.	6.1	1639.0	*	2		21121357		0.	
1		0046	24	0.	.0	1630.0	*	1		2300	691	0.	6.1	1639.0	*	2		21141358		0.	
1		0048	25	0.	.0	1630.0	*	1		2302	692	0.	6.1	1639.0	*	2		21161359		0.	
1		0050	26	0.	.0	1630.0	*	1		2304	693	0.	6.1	1639.0	*	2		21181360		0.	
1		0052	27	0.	.0	1630.0	*	1		2306	694	0.	6.1	1639.0	*	2		21201361		0.	
1		0054	28	0.	.0	1630.0	*	1		2308	695	0.	6.1	1639.0	*	2		21221362		0.	
1		0056	29	0.	.0	1630.0	*	1		2310	696	0.	6.1	1639.0	*	2		21241363		0.	
1		0058	30	0.	.0	1630.0	*	1		2312	697	0.	6.1	1639.0	*	2		21261364		0.	
1		0100	31	0.	.0	1630.0	*	1		2314	698	0.	6.1	1639.0	*	2		21281365		0.	
1		0102	32	0.	.0	1630.0	*	1		2316	699	0.	6.1	1639.0	*	2		21301366		0.	

1	0104	33	0.	.0	1630.0	*	1	2318	700	0.	6.1	1639.0	*	2	21321367	0.
1	0106	34	0.	.0	1630.0	*	1	2320	701	0.	6.1	1639.0	*	2	21341368	0.
1	0108	35	0.	.0	1630.0	*	1	2322	702	0.	6.1	1639.0	*	2	21361369	0.
1	0110	36	0.	.0	1630.0	*	1	2324	703	0.	6.1	1639.0	*	2	21381370	0.
	0112	37	0.	.0	1630.0	*	1	2326	704	0.	6.1	1639.0	*	2	21401371	0.
	0114	38	0.	.0	1630.0	*	1	2328	705	0.	6.1	1639.0	*	2	21421372	0.
1	0116	39	0.	.0	1630.0	*	1	2330	706	0.	6.1	1639.0	*	2	21441373	0.
1	0118	40	0.	.0	1630.0	*	1	2332	707	0.	6.1	1639.0	*	2	21461374	0.
1	0120	41	0.	.0	1630.0	*	1	2334	708	0.	6.1	1639.0	*	2	21481375	0.
1	0122	42	0.	.0	1630.0	*	1	2336	709	0.	6.1	1639.0	*	2	21501376	0.
1	0124	43	0.	.0	1630.0	*	1	2338	710	0.	6.1	1639.0	*	2	21521377	0.
1	0126	44	0.	.0	1630.0	*	1	2340	711	0.	6.1	1639.0	*	2	21541378	0.
1	0128	45	0.	.0	1630.0	*	1	2342	712	0.	6.1	1639.0	*	2	21561379	0.
1	0130	46	0.	.0	1630.0	*	1	2344	713	0.	6.1	1639.0	*	2	21581380	0.
1	0132	47	0.	.0	1630.0	*	1	2346	714	0.	6.1	1639.0	*	2	22001381	0.
1	0134	48	0.	.0	1630.0	*	1	2348	715	0.	6.1	1639.0	*	2	22021382	0.
1	0136	49	0.	.0	1630.0	*	1	2350	716	0.	6.1	1639.0	*	2	22041383	0.
1	0138	50	0.	.0	1630.0	*	1	2352	717	0.	6.1	1639.0	*	2	22061384	0.
1	0140	51	0.	.0	1630.0	*	1	2354	718	0.	6.1	1639.0	*	2	22081385	0.
1	0142	52	0.	.0	1630.0	*	1	2356	719	0.	6.1	1639.0	*	2	22101386	0.
1	0144	53	0.	.0	1630.0	*	1	2358	720	0.	6.1	1639.0	*	2	22121387	0.
1	0146	54	0.	.0	1630.0	*	2	0000	721	0.	6.1	1639.0	*	2	22141388	0.
1	0148	55	0.	.0	1630.0	*	2	0002	722	0.	6.1	1639.0	*	2	22161389	0.
1	0150	56	0.	.0	1630.0	*	2	0004	723	0.	6.1	1639.0	*	2	22181390	0.
1	0152	57	0.	.0	1630.0	*	2	0006	724	0.	6.1	1639.0	*	2	22201391	0.
1	0154	58	0.	.0	1630.0	*	2	0008	725	0.	6.1	1639.0	*	2	22221392	0.
1	0156	59	0.	.0	1630.0	*	2	0010	726	0.	6.1	1639.0	*	2	22241393	0.
1	0158	60	0.	.0	1630.0	*	2	0012	727	0.	6.1	1639.0	*	2	22261394	0.
1	0200	61	0.	.0	1630.0	*	2	0014	728	0.	6.1	1639.0	*	2	22281395	0.
1	0202	62	0.	.0	1630.0	*	2	0016	729	0.	6.1	1639.0	*	2	22301396	0.
1	0204	63	0.	.0	1630.0	*	2	0018	730	0.	6.1	1639.0	*	2	22321397	0.
1	0206	64	0.	.0	1630.0	*	2	0020	731	0.	6.1	1639.0	*	2	22341398	0.
1	0208	65	0.	.0	1630.0	*	2	0022	732	0.	6.1	1639.0	*	2	22361399	0.
1	0210	66	0.	.0	1630.0	*	2	0024	733	0.	6.1	1639.0	*	2	22381400	0.
1	0212	67	0.	.0	1630.0	*	2	0026	734	0.	6.1	1639.0	*	2	22401401	0.
1	0214	68	0.	.0	1630.0	*	2	0028	735	0.	6.1	1639.0	*	2	22421402	0.
1	0216	69	0.	.0	1630.0	*	2	0030	736	0.	6.1	1639.0	*	2	22441403	0.
1	0218	70	0.	.0	1630.0	*	2	0032	737	0.	6.1	1639.0	*	2	22461404	0.
1	0220	71	0.	.0	1630.0	*	2	0034	738	0.	6.1	1639.0	*	2	22481405	0.
1	0222	72	0.	.0	1630.0	*	2	0036	739	0.	6.1	1639.0	*	2	22501406	0.
	0224	73	0.	.0	1630.0	*	2	0038	740	0.	6.1	1639.0	*	2	22521407	0.
	0226	74	0.	.0	1630.0	*	2	0040	741	0.	6.1	1639.0	*	2	22541408	0.
1	0228	75	0.	.0	1630.0	*	2	0042	742	0.	6.1	1639.0	*	2	22561409	0.
1	0230	76	0.	.0	1630.0	*	2	0044	743	0.	6.1	1639.0	*	2	22581410	0.
1	0232	77	0.	.0	1630.0	*	2	0046	744	0.	6.1	1639.0	*	2	23001411	0.
1	0234	78	0.	.0	1630.0	*	2	0048	745	0.	6.1	1639.0	*	2	23021412	0.
1	0236	79	0.	.0	1630.0	*	2	0050	746	0.	6.1	1639.0	*	2	23041413	0.
1	0238	80	0.	.0	1630.0	*	2	0052	747	0.	6.1	1639.0	*	2	23061414	0.
1	0240	81	0.	.0	1630.0	*	2	0054	748	0.	6.1	1639.0	*	2	23081415	0.
1	0242	82	0.	.0	1630.0	*	2	0056	749	0.	6.1	1639.0	*	2	23101416	0.
1	0244	83	0.	.0	1630.0	*	2	0058	750	0.	6.1	1639.0	*	2	23121417	0.
1	0246	84	0.	.0	1630.0	*	2	0100	751	0.	6.1	1639.0	*	2	23141418	0.
1	0248	85	0.	.0	1630.0	*	2	0102	752	0.	6.1	1639.0	*	2	23161419	0.
1	0250	86	0.	.0	1630.0	*	2	0104	753	0.	6.1	1639.0	*	2	23181420	0.
1	0252	87	0.	.0	1630.0	*	2	0106	754	0.	6.1	1639.0	*	2	23201421	0.
1	0254	88	0.	.0	1630.0	*	2	0108	755	0.	6.1	1639.0	*	2	23221422	0.
1	0256	89	0.	.0	1630.0	*	2	0110	756	0.	6.1	1639.0	*	2	23241423	0.
1	0258	90	0.	.0	1630.0	*	2	0112	757	0.	6.1	1639.0	*	2	23261424	0.
1	0300	91	0.	.0	1630.0	*	2	0114	758	0.	6.1	1639.0	*	2	23281425	0.
1	0302	92	0.	.0	1630.0	*	2	0116	759	0.	6.1	1639.0	*	2	23301426	0.
1	0304	93	0.	.0	1630.0	*	2	0118	760	0.	6.1	1639.0	*	2	23321427	0.
1	0306	94	0.	.0	1630.0	*	2	0120	761	0.	6.1	1639.0	*	2	23341428	0.
1	0308	95	0.	.0	1630.0	*	2	0122	762	0.	6.1	1639.0	*	2	23361429	0.
1	0310	96	0.	.0	1630.0	*	2	0124	763	0.	6.1	1639.0	*	2	23381430	0.
1	0312	97	0.	.0	1630.0	*	2	0126	764	0.	6.1	1639.0	*	2	23401431	0.
1	0314	98	0.	.0	1630.0	*	2	0128	765	0.	6.1	1639.0	*	2	23421432	0.
1	0316	99	0.	.0	1630.0	*	2	0130	766	0.	6.1	1639.0	*	2	23441433	0.
1	0318	100	0.	.0	1630.0	*	2	0132	767	0.	6.1	1639.0	*	2	23461434	0.
1	0320	101	0.	.0	1630.0	*	2	0134	768	0.	6.1	1639.0	*	2	23481435	0.
1	0322	102	0.	.0	1630.0	*	2	0136	769	0.	6.1	1639.0	*	2	23501436	0.
1	0324	103	0.	.0	1630.0	*	2	0138	770	0.	6.1	1639.0	*	2	23521437	0.
1	0326	104	0.	.0	1630.0	*	2	0140	771	0.	6.1	1639.0	*	2	23541438	0.
1	0328	105	0.	.0	1630.0	*	2	0142	772	0.	6.1	1639.0	*	2	23561439	0.
1	0330	106	0.	.0	1630.0	*	2	0144	773	0.	6.1	1639.0	*	2	23581440	0.
1	0332	107	0.	.0	1630.0	*	2	0146	774	0.	6.1	1639.0	*	3	00001441	0.
	0334	108	0.	.0	1630.0	*	2	0148	775	0.	6.1	1639.0	*	3	00021442	0.
	0336	109	0.	.0	1630.0	*	2	0150	776	0.	6.1	1639.0	*	3	00041443	0.
1	0338	110	0.	.0	1630.0	*	2	0152	777	0.	6.1	1639.0	*	3	00061444	0.
1	0340	111	0.	.0	1630.0	*	2	0154	778	0.	6.1	1639.0	*	3	00081445	0.
1	0342	112	0.	.0	1630.0	*	2	0156	779	0.	6.1	1639.0	*	3	00101446	0.
1	0344	113	0.	.0	1630.0	*	2	0158	780	0.	6.1	1639.0	*	3	00121447	0.
1	0346	114	0.	.0	1630.0	*	2	0200	781	0.	6.1	1639.0	*	3	00141448	0.
1	0348	115	0.	.0	1630.0	*	2	0202	782	0.	6.1	1639.0	*	3	00161449	0.
1	0350	116	0.	.0	1630.0	*	2	0204	783	0.	6.1	1639.0	*	3	00181450	0.

1	0352	117	0.	.0	1630.0	*	2	0206	784	0.	6.1	1639.0	*	3	00201451	0.
1	0354	118	0.	.0	1630.0	*	2	0208	785	0.	6.1	1639.0	*	3	00221452	0.
1	0356	119	0.	.0	1630.0	*	2	0210	786	0.	6.1	1639.0	*	3	00241453	0.
1	0358	120	0.	.0	1630.0	*	2	0212	787	0.	6.1	1639.0	*	3	00261454	0.
1	0400	121	0.	.0	1630.0	*	2	0214	788	0.	6.1	1639.0	*	3	00281455	0.
1	0402	122	0.	.0	1630.0	*	2	0216	789	0.	6.1	1639.0	*	3	00301456	0.
1	0404	123	0.	.0	1630.0	*	2	0218	790	0.	6.1	1639.0	*	3	00321457	0.
1	0406	124	0.	.0	1630.0	*	2	0220	791	0.	6.1	1639.0	*	3	00341458	0.
1	0408	125	0.	.0	1630.0	*	2	0222	792	0.	6.1	1639.0	*	3	00361459	0.
1	0410	126	0.	.0	1630.0	*	2	0224	793	0.	6.1	1639.0	*	3	00381460	0.
1	0412	127	0.	.0	1630.0	*	2	0226	794	0.	6.1	1639.0	*	3	00401461	0.
1	0414	128	0.	.0	1630.0	*	2	0228	795	0.	6.1	1639.0	*	3	00421462	0.
1	0416	129	0.	.0	1630.0	*	2	0230	796	0.	6.1	1639.0	*	3	00441463	0.
1	0418	130	0.	.0	1630.0	*	2	0232	797	0.	6.1	1639.0	*	3	00461464	0.
1	0420	131	0.	.0	1630.0	*	2	0234	798	0.	6.1	1639.0	*	3	00481465	0.
1	0422	132	0.	.0	1630.0	*	2	0236	799	0.	6.1	1639.0	*	3	00501466	0.
1	0424	133	0.	.0	1630.0	*	2	0238	800	0.	6.1	1639.0	*	3	00521467	0.
1	0426	134	0.	.0	1630.0	*	2	0240	801	0.	6.1	1639.0	*	3	00541468	0.
1	0428	135	0.	.0	1630.0	*	2	0242	802	0.	6.1	1639.0	*	3	00561469	0.
1	0430	136	0.	.0	1630.0	*	2	0244	803	0.	6.1	1639.0	*	3	00581470	0.
1	0432	137	0.	.0	1630.0	*	2	0246	804	0.	6.1	1639.0	*	3	01001471	0.
1	0434	138	0.	.0	1630.0	*	2	0248	805	0.	6.1	1639.0	*	3	01021472	0.
1	0436	139	0.	.0	1630.0	*	2	0250	806	0.	6.1	1639.0	*	3	01041473	0.
1	0438	140	0.	.0	1630.0	*	2	0252	807	0.	6.1	1639.0	*	3	01061474	0.
1	0440	141	0.	.0	1630.0	*	2	0254	808	0.	6.1	1639.0	*	3	01081475	0.
1	0442	142	0.	.0	1630.0	*	2	0256	809	0.	6.1	1639.0	*	3	01101476	0.
1	0444	143	0.	.0	1630.0	*	2	0258	810	0.	6.1	1639.0	*	3	01121477	0.
1	0446	144	0.	.0	1630.0	*	2	0300	811	0.	6.1	1639.0	*	3	01141478	0.
1	0448	145	0.	.0	1630.0	*	2	0302	812	0.	6.1	1639.0	*	3	01161479	0.
1	0450	146	0.	.0	1630.0	*	2	0304	813	0.	6.1	1639.0	*	3	01181480	0.
1	0452	147	0.	.0	1630.0	*	2	0306	814	0.	6.1	1639.0	*	3	01201481	0.
1	0454	148	0.	.0	1630.0	*	2	0308	815	0.	6.1	1639.0	*	3	01221482	0.
1	0456	149	0.	.0	1630.0	*	2	0310	816	0.	6.1	1639.0	*	3	01241483	0.
1	0458	150	0.	.0	1630.0	*	2	0312	817	0.	6.1	1639.0	*	3	01261484	0.
1	0500	151	0.	.0	1630.0	*	2	0314	818	0.	6.1	1639.0	*	3	01281485	0.
1	0502	152	0.	.0	1630.0	*	2	0316	819	0.	6.1	1639.0	*	3	01301486	0.
1	0504	153	0.	.0	1630.0	*	2	0318	820	0.	6.1	1639.0	*	3	01321487	0.
1	0506	154	0.	.0	1630.0	*	2	0320	821	0.	6.1	1639.0	*	3	01341488	0.
1	0508	155	0.	.0	1630.0	*	2	0322	822	0.	6.1	1639.0	*	3	01361489	0.
1	0510	156	0.	.0	1630.0	*	2	0324	823	0.	6.1	1639.0	*	3	01381490	0.
1	0512	157	0.	.0	1630.0	*	2	0326	824	0.	6.1	1639.0	*	3	01401491	0.
1	0514	158	0.	.0	1630.0	*	2	0328	825	0.	6.1	1639.0	*	3	01421492	0.
1	0516	159	0.	.0	1630.0	*	2	0330	826	0.	6.1	1639.0	*	3	01441493	0.
1	0518	160	0.	.0	1630.0	*	2	0332	827	0.	6.1	1639.0	*	3	01461494	0.
1	0520	161	0.	.0	1630.0	*	2	0334	828	0.	6.1	1639.0	*	3	01481495	0.
1	0522	162	0.	.0	1630.0	*	2	0336	829	0.	6.1	1639.0	*	3	01501496	0.
1	0524	163	0.	.0	1630.0	*	2	0338	830	0.	6.1	1639.0	*	3	01521497	0.
1	0526	164	0.	.0	1630.0	*	2	0340	831	0.	6.1	1639.0	*	3	01541498	0.
1	0528	165	0.	.0	1630.0	*	2	0342	832	0.	6.1	1639.0	*	3	01561499	0.
1	0530	166	0.	.0	1630.0	*	2	0344	833	0.	6.1	1639.0	*	3	01581500	0.
1	0532	167	0.	.0	1630.0	*	2	0346	834	0.	6.1	1639.0	*	3	02001501	0.
1	0534	168	0.	.0	1630.0	*	2	0348	835	0.	6.1	1639.0	*	3	02021502	0.
1	0536	169	0.	.0	1630.0	*	2	0350	836	0.	6.1	1639.0	*	3	02041503	0.
1	0538	170	0.	.0	1630.0	*	2	0352	837	0.	6.1	1639.0	*	3	02061504	0.
1	0540	171	0.	.0	1630.0	*	2	0354	838	0.	6.1	1639.0	*	3	02081505	0.
1	0542	172	0.	.0	1630.0	*	2	0356	839	0.	6.1	1639.0	*	3	02101506	0.
1	0544	173	0.	.0	1630.0	*	2	0358	840	0.	6.1	1639.0	*	3	02121507	0.
1	0546	174	0.	.0	1630.0	*	2	0400	841	0.	6.1	1639.0	*	3	02141508	0.
1	0548	175	0.	.0	1630.0	*	2	0402	842	0.	6.1	1639.0	*	3	02161509	0.
1	0550	176	0.	.0	1630.0	*	2	0404	843	0.	6.1	1639.0	*	3	02181510	0.
1	0552	177	0.	.0	1630.0	*	2	0406	844	0.	6.1	1639.0	*	3	02201511	0.
1	0554	178	0.	.0	1630.0	*	2	0408	845	0.	6.1	1639.0	*	3	02221512	0.
1	0556	179	0.	.0	1630.0	*	2	0410	846	0.	6.1	1639.0	*	3	02241513	0.
1	0558	180	0.	.0	1630.0	*	2	0412	847	0.	6.1	1639.0	*	3	02261514	0.
1	0600	181	0.	.0	1630.0	*	2	0414	848	0.	6.1	1639.0	*	3	02281515	0.
1	0602	182	0.	.0	1630.0	*	2	0416	849	0.	6.1	1639.0	*	3	02301516	0.
1	0604	183	0.	.0	1630.0	*	2	0418	850	0.	6.1	1639.0	*	3	02321517	0.
1	0606	184	0.	.0	1630.0	*	2	0420	851	0.	6.1	1639.0	*	3	02341518	0.
1	0608	185	0.	.0	1630.0	*	2	0422	852	0.	6.1	1639.0	*	3	02361519	0.
1	0610	186	0.	.0	1630.0	*	2	0424	853	0.	6.1	1639.0	*	3	02381520	0.
1	0612	187	0.	.0	1630.0	*	2	0426	854	0.	6.1	1639.0	*	3	02401521	0.
1	0614	188	0.	.0	1630.0	*	2	0428	855	0.	6.1	1639.0	*	3	02421522	0.
1	0616	189	0.	.0	1630.0	*	2	0430	856	0.	6.1	1639.0	*	3	02441523	0.
1	0618	190	0.	.0	1630.0	*	2	0432	857	0.	6.1	1639.0	*	3	02461524	0.
1	0620	191	0.	.0	1630.0	*	2	0434	858	0.	6.1	1639.0	*	3	02481525	0.
1	0622	192	0.	.0	1630.0	*	2	0436	859	0.	6.1	1639.0	*	3	02501526	0.
1	0624	193	0.	.0	1630.0	*	2	0438	860	0.	6.1	1639.0	*	3	02521527	0.
1	0626	194	0.	.0	1630.0	*	2	0440	861	0.	6.1	1639.0	*	3	02541528	0.
1	0628	195	0.	.0	1630.0	*	2	0442	862	0.	6.1	1639.0	*	3	02561529	0.
1	0630	196	0.	.0	1630.0	*	2	0444	863	0.	6.1	1639.0	*	3	02581530	0.
1	0632	197	0.	.0	1630.0	*	2	0446	864	0.	6.1	1639.0	*	3	03001531	0.
1	0634	198	0.	.0	1630.0	*	2	0448	865	0.	6.1	1639.0	*	3	03021532	0.
1	0636	199	0.	.0	1630.0	*	2	0450	866	0.	6.1	1639.0	*	3	03041533	0.
1	0638	200	0.	.0	1630.0	*	2	0452	867	0.	6.1	1639.0	*	3	03061534	0.

1	0640	201	0.	.0	1630.0	*	2	0454	868	0.	6.1	1639.0	*	3	03081535	0.
1	0642	202	0.	.0	1630.0	*	2	0456	869	0.	6.1	1639.0	*	3	03101536	0.
1	0644	203	0.	.0	1630.0	*	2	0458	870	0.	6.1	1639.0	*	3	03121537	0.
1	0646	204	0.	.0	1630.0	*	2	0500	871	0.	6.1	1639.0	*	3	03141538	0.
	0648	205	0.	.0	1630.0	*	2	0502	872	0.	6.1	1639.0	*	3	03161539	0.
	0650	206	0.	.0	1630.0	*	2	0504	873	0.	6.1	1639.0	*	3	03181540	0.
1	0652	207	0.	.0	1630.0	*	2	0506	874	0.	6.1	1639.0	*	3	03201541	0.
1	0654	208	0.	.0	1630.0	*	2	0508	875	0.	6.1	1639.0	*	3	03221542	0.
1	0656	209	0.	.0	1630.0	*	2	0510	876	0.	6.1	1639.0	*	3	03241543	0.
1	0658	210	0.	.0	1630.0	*	2	0512	877	0.	6.1	1639.0	*	3	03261544	0.
1	0700	211	0.	.0	1630.0	*	2	0514	878	0.	6.1	1639.0	*	3	03281545	0.
1	0702	212	0.	.0	1630.0	*	2	0516	879	0.	6.1	1639.0	*	3	03301546	0.
1	0704	213	0.	.0	1630.0	*	2	0518	880	0.	6.1	1639.0	*	3	03321547	0.
1	0706	214	0.	.0	1630.0	*	2	0520	881	0.	6.1	1639.0	*	3	03341548	0.
1	0708	215	0.	.0	1630.0	*	2	0522	882	0.	6.1	1639.0	*	3	03361549	0.
1	0710	216	0.	.0	1630.0	*	2	0524	883	0.	6.1	1639.0	*	3	03381550	0.
1	0712	217	0.	.0	1630.0	*	2	0526	884	0.	6.1	1639.0	*	3	03401551	0.
1	0714	218	0.	.0	1630.0	*	2	0528	885	0.	6.1	1639.0	*	3	03421552	0.
1	0716	219	0.	.0	1630.0	*	2	0530	886	0.	6.1	1639.0	*	3	03441553	0.
1	0718	220	0.	.0	1630.0	*	2	0532	887	0.	6.1	1639.0	*	3	03461554	0.
1	0720	221	0.	.0	1630.0	*	2	0534	888	0.	6.1	1639.0	*	3	03481555	0.
1	0722	222	0.	.0	1630.0	*	2	0536	889	0.	6.1	1639.0	*	3	03501556	0.
1	0724	223	0.	.0	1630.0	*	2	0538	890	0.	6.1	1639.0	*	3	03521557	0.
1	0726	224	0.	.0	1630.0	*	2	0540	891	0.	6.1	1639.0	*	3	03541558	0.
1	0728	225	0.	.0	1630.0	*	2	0542	892	0.	6.1	1639.0	*	3	03561559	0.
1	0730	226	0.	.0	1630.0	*	2	0544	893	0.	6.1	1639.0	*	3	03581560	0.
1	0732	227	0.	.0	1630.0	*	2	0546	894	0.	6.1	1639.0	*	3	04001561	0.
1	0734	228	0.	.0	1630.0	*	2	0548	895	0.	6.1	1639.0	*	3	04021562	0.
1	0736	229	0.	.0	1630.0	*	2	0550	896	0.	6.1	1639.0	*	3	04041563	0.
1	0738	230	0.	.0	1630.0	*	2	0552	897	0.	6.1	1639.0	*	3	04061564	0.
1	0740	231	0.	.0	1630.0	*	2	0554	898	0.	6.1	1639.0	*	3	04081565	0.
1	0742	232	0.	.0	1630.0	*	2	0556	899	0.	6.1	1639.0	*	3	04101566	0.
1	0744	233	0.	.0	1630.0	*	2	0558	900	0.	6.1	1639.0	*	3	04121567	0.
1	0746	234	0.	.0	1630.0	*	2	0600	901	0.	6.1	1639.0	*	3	04141568	0.
1	0748	235	0.	.0	1630.0	*	2	0602	902	0.	6.1	1639.0	*	3	04161569	0.
1	0750	236	0.	.0	1630.0	*	2	0604	903	0.	6.1	1639.0	*	3	04181570	0.
1	0752	237	0.	.0	1630.0	*	2	0606	904	0.	6.1	1639.0	*	3	04201571	0.
1	0754	238	0.	.0	1630.0	*	2	0608	905	0.	6.1	1639.0	*	3	04221572	0.
1	0756	239	0.	.0	1630.0	*	2	0610	906	0.	6.1	1639.0	*	3	04241573	0.
1	0758	240	0.	.0	1630.0	*	2	0612	907	0.	6.1	1639.0	*	3	04261574	0.
	0800	241	0.	.0	1630.0	*	2	0614	908	0.	6.1	1639.0	*	3	04281575	0.
	0802	242	0.	.0	1630.0	*	2	0616	909	0.	6.1	1639.0	*	3	04301576	0.
1	0804	243	0.	.0	1630.0	*	2	0618	910	0.	6.1	1639.0	*	3	04321577	0.
1	0806	244	0.	.0	1630.0	*	2	0620	911	0.	6.1	1639.0	*	3	04341578	0.
1	0808	245	0.	.0	1630.0	*	2	0622	912	0.	6.1	1639.0	*	3	04361579	0.
1	0810	246	0.	.0	1630.0	*	2	0624	913	0.	6.1	1639.0	*	3	04381580	0.
1	0812	247	0.	.0	1630.0	*	2	0626	914	0.	6.1	1639.0	*	3	04401581	0.
1	0814	248	0.	.0	1630.0	*	2	0628	915	0.	6.1	1639.0	*	3	04421582	0.
1	0816	249	0.	.0	1630.0	*	2	0630	916	0.	6.1	1639.0	*	3	04441583	0.
1	0818	250	0.	.0	1630.0	*	2	0632	917	0.	6.1	1639.0	*	3	04461584	0.
1	0820	251	0.	.0	1630.0	*	2	0634	918	0.	6.1	1639.0	*	3	04481585	0.
1	0822	252	0.	.0	1630.0	*	2	0636	919	0.	6.1	1639.0	*	3	04501586	0.
1	0824	253	0.	.0	1630.0	*	2	0638	920	0.	6.1	1639.0	*	3	04521587	0.
1	0826	254	0.	.0	1630.0	*	2	0640	921	0.	6.1	1639.0	*	3	04541588	0.
1	0828	255	0.	.0	1630.0	*	2	0642	922	0.	6.1	1639.0	*	3	04561589	0.
1	0830	256	0.	.0	1630.0	*	2	0644	923	0.	6.1	1639.0	*	3	04581590	0.
1	0832	257	0.	.0	1630.0	*	2	0646	924	0.	6.1	1639.0	*	3	05001591	0.
1	0834	258	0.	.0	1630.0	*	2	0648	925	0.	6.1	1639.0	*	3	05021592	0.
1	0836	259	0.	.0	1630.0	*	2	0650	926	0.	6.1	1639.0	*	3	05041593	0.
1	0838	260	0.	.0	1630.0	*	2	0652	927	0.	6.1	1639.0	*	3	05061594	0.
1	0840	261	0.	.0	1630.0	*	2	0654	928	0.	6.1	1639.0	*	3	05081595	0.
1	0842	262	0.	.0	1630.0	*	2	0656	929	0.	6.1	1639.0	*	3	05101596	0.
1	0844	263	0.	.0	1630.0	*	2	0658	930	0.	6.1	1639.0	*	3	05121597	0.
1	0846	264	0.	.0	1630.0	*	2	0700	931	0.	6.1	1639.0	*	3	05141598	0.
1	0848	265	0.	.0	1630.0	*	2	0702	932	0.	6.1	1639.0	*	3	05161599	0.
1	0850	266	0.	.0	1630.0	*	2	0704	933	0.	6.1	1639.0	*	3	05181600	0.
1	0852	267	0.	.0	1630.0	*	2	0706	934	0.	6.1	1639.0	*	3	05201601	0.
1	0854	268	0.	.0	1630.0	*	2	0708	935	0.	6.1	1639.0	*	3	05221602	0.
1	0856	269	0.	.0	1630.0	*	2	0710	936	0.	6.1	1639.0	*	3	05241603	0.
1	0858	270	0.	.0	1630.0	*	2	0712	937	0.	6.1	1639.0	*	3	05261604	0.
1	0900	271	0.	.0	1630.0	*	2	0714	938	0.	6.1	1639.0	*	3	05281605	0.
1	0902	272	0.	.0	1630.0	*	2	0716	939	0.	6.1	1639.0	*	3	05301606	0.
1	0904	273	0.	.0	1630.0	*	2	0718	940	0.	6.1	1639.0	*	3	05321607	0.
1	0906	274	0.	.0	1630.0	*	2	0720	941	0.	6.1	1639.0	*	3	05341608	0.
1	0908	275	0.	.0	1630.0	*	2	0722	942	0.	6.1	1639.0	*	3	05361609	0.
	0910	276	0.	.0	1630.0	*	2	0724	943	0.	6.1	1639.0	*	3	05381610	0.
	0912	277	0.	.0	1630.0	*	2	0726	944	0.	6.1	1639.0	*	3	05401611	0.
	0914	278	0.	.0	1630.0	*	2	0728	945	0.	6.1	1639.0	*	3	05421612	0.
1	0916	279	0.	.0	1630.0	*	2	0730	946	0.	6.1	1639.0	*	3	05441613	0.
1	0918	280	0.	.0	1630.0	*	2	0732	947	0.	6.1	1639.0	*	3	05461614	0.
1	0920	281	0.	.0	1630.0	*	2	0734	948	0.	6.1	1639.0	*	3	05481615	0.
1	0922	282	0.	.0	1630.0	*	2	0736	949	0.	6.1	1639.0	*	3	05501616	0.
1	0924	283	0.	.0	1630.0	*	2	0738	950	0.	6.1	1639.0	*	3	05521617	0.
1	0926	284	0.	.0	1630.0	*	2	0740	951	0.	6.1	1639.0	*	3	05541618	0.

1	0928	285	0.	.0	1630.0	*	2	0742	952	0.	6.1	1639.0	*	3	05561619	0.
1	0930	286	0.	.0	1630.0	*	2	0744	953	0.	6.1	1639.0	*	3	05581620	0.
1	0932	287	0.	.0	1630.0	*	2	0746	954	0.	6.1	1639.0	*	3	06001621	0.
1	0934	288	0.	.0	1630.0	*	2	0748	955	0.	6.1	1639.0	*	3	06021622	0.
1	0936	289	0.	.0	1630.0	*	2	0750	956	0.	6.1	1639.0	*	3	06041623	0.
1	0938	290	0.	.0	1630.0	*	2	0752	957	0.	6.1	1639.0	*	3	06061624	0.
1	0940	291	0.	.0	1630.0	*	2	0754	958	0.	6.1	1639.0	*	3	06081625	0.
1	0942	292	0.	.0	1630.0	*	2	0756	959	0.	6.1	1639.0	*	3	06101626	0.
1	0944	293	0.	.0	1630.0	*	2	0758	960	0.	6.1	1639.0	*	3	06121627	0.
1	0946	294	0.	.0	1630.0	*	2	0800	961	0.	6.1	1639.0	*	3	06141628	0.
1	0948	295	0.	.0	1630.0	*	2	0802	962	0.	6.1	1639.0	*	3	06161629	0.
1	0950	296	0.	.0	1630.0	*	2	0804	963	0.	6.1	1639.0	*	3	06181630	0.
1	0952	297	0.	.0	1630.0	*	2	0806	964	0.	6.1	1639.0	*	3	06201631	0.
1	0954	298	0.	.0	1630.0	*	2	0808	965	0.	6.1	1639.0	*	3	06221632	0.
1	0956	299	0.	.0	1630.0	*	2	0810	966	0.	6.1	1639.0	*	3	06241633	0.
1	0958	300	0.	.0	1630.0	*	2	0812	967	0.	6.1	1639.0	*	3	06261634	0.
1	1000	301	0.	.0	1630.0	*	2	0814	968	0.	6.1	1639.0	*	3	06281635	0.
1	1002	302	0.	.0	1630.0	*	2	0816	969	0.	6.1	1639.0	*	3	06301636	0.
1	1004	303	0.	.0	1630.0	*	2	0818	970	0.	6.1	1639.0	*	3	06321637	0.
1	1006	304	0.	.0	1630.0	*	2	0820	971	0.	6.1	1639.0	*	3	06341638	0.
1	1008	305	0.	.0	1630.0	*	2	0822	972	0.	6.1	1639.0	*	3	06361639	0.
1	1010	306	0.	.0	1630.0	*	2	0824	973	0.	6.1	1639.0	*	3	06381640	0.
1	1012	307	0.	.0	1630.0	*	2	0826	974	0.	6.1	1639.0	*	3	06401641	0.
1	1014	308	0.	.0	1630.0	*	2	0828	975	0.	6.1	1639.0	*	3	06421642	0.
1	1016	309	0.	.0	1630.0	*	2	0830	976	0.	6.1	1639.0	*	3	06441643	0.
1	1018	310	0.	.0	1630.0	*	2	0832	977	0.	6.1	1639.0	*	3	06461644	0.
1	1020	311	0.	.0	1630.0	*	2	0834	978	0.	6.1	1639.0	*	3	06481645	0.
1	1022	312	0.	.0	1630.0	*	2	0836	979	0.	6.1	1639.0	*	3	06501646	0.
1	1024	313	0.	.0	1630.0	*	2	0838	980	0.	6.1	1639.0	*	3	06521647	0.
1	1026	314	0.	.0	1630.0	*	2	0840	981	0.	6.1	1639.0	*	3	06541648	0.
1	1028	315	0.	.0	1630.0	*	2	0842	982	0.	6.1	1639.0	*	3	06561649	0.
1	1030	316	0.	.0	1630.0	*	2	0844	983	0.	6.1	1639.0	*	3	06581650	0.
1	1032	317	0.	.0	1630.0	*	2	0846	984	0.	6.1	1639.0	*	3	07001651	0.
1	1034	318	0.	.0	1630.0	*	2	0848	985	0.	6.1	1639.0	*	3	07021652	0.
1	1036	319	0.	.0	1630.0	*	2	0850	986	0.	6.1	1639.0	*	3	07041653	0.
1	1038	320	0.	.0	1630.0	*	2	0852	987	0.	6.1	1639.0	*	3	07061654	0.
1	1040	321	0.	.0	1630.0	*	2	0854	988	0.	6.1	1639.0	*	3	07081655	0.
1	1042	322	0.	.0	1630.0	*	2	0856	989	0.	6.1	1639.0	*	3	07101656	0.
1	1044	323	0.	.0	1630.0	*	2	0858	990	0.	6.1	1639.0	*	3	07121657	0.
1	1046	324	0.	.0	1630.0	*	2	0900	991	0.	6.1	1639.0	*	3	07141658	0.
1	1048	325	0.	.0	1630.0	*	2	0902	992	0.	6.1	1639.0	*	3	07161659	0.
1	1050	326	0.	.0	1630.0	*	2	0904	993	0.	6.1	1639.0	*	3	07181660	0.
1	1052	327	0.	.0	1630.0	*	2	0906	994	0.	6.1	1639.0	*	3	07201661	0.
1	1054	328	0.	.0	1630.0	*	2	0908	995	0.	6.1	1639.0	*	3	07221662	0.
1	1056	329	0.	.0	1630.0	*	2	0910	996	0.	6.1	1639.0	*	3	07241663	0.
1	1058	330	0.	.0	1630.0	*	2	0912	997	0.	6.1	1639.0	*	3	07261664	0.
1	1100	331	0.	.0	1630.0	*	2	0914	998	0.	6.1	1639.0	*	3	07281665	0.
1	1102	332	0.	.0	1630.0	*	2	0916	999	0.	6.1	1639.0	*	3	07301666	0.
1	1104	333	0.	.0	1630.0	*	2	09181000		0.	6.1	1639.0	*	3	07321667	0.
1	1106	334	0.	.0	1630.0	*	2	09201001		0.	6.1	1639.0	*	3	07341668	0.
1	1108	335	0.	.0	1630.0	*	2	09221002		0.	6.1	1639.0	*	3	07361669	0.
1	1110	336	0.	.0	1630.0	*	2	09241003		0.	6.1	1639.0	*	3	07381670	0.
1	1112	337	0.	.0	1630.0	*	2	09261004		0.	6.1	1639.0	*	3	07401671	0.
1	1114	338	0.	.0	1630.0	*	2	09281005		0.	6.1	1639.0	*	3	07421672	0.
1	1116	339	0.	.0	1630.0	*	2	09301006		0.	6.1	1639.0	*	3	07441673	0.
1	1118	340	0.	.0	1630.0	*	2	09321007		0.	6.1	1639.0	*	3	07461674	0.
1	1120	341	0.	.0	1630.0	*	2	09341008		0.	6.1	1639.0	*	3	07481675	0.
1	1122	342	0.	.0	1630.0	*	2	09361009		0.	6.1	1639.0	*	3	07501676	0.
1	1124	343	0.	.0	1630.0	*	2	09381010		0.	6.1	1639.0	*	3	07521677	0.
1	1126	344	0.	.0	1630.0	*	2	09401011		0.	6.1	1639.0	*	3	07541678	0.
1	1128	345	0.	.0	1630.0	*	2	09421012		0.	6.1	1639.0	*	3	07561679	0.
1	1130	346	0.	.0	1630.0	*	2	09441013		0.	6.1	1639.0	*	3	07581680	0.
1	1132	347	0.	.0	1630.0	*	2	09461014		0.	6.1	1639.0	*	3	08001681	0.
1	1134	348	0.	.0	1630.0	*	2	09481015		0.	6.1	1639.0	*	3	08021682	0.
1	1136	349	0.	.0	1630.0	*	2	09501016		0.	6.1	1639.0	*	3	08041683	0.
1	1138	350	0.	.0	1630.0	*	2	09521017		0.	6.1	1639.0	*	3	08061684	0.
1	1140	351	0.	.0	1630.0	*	2	09541018		0.	6.1	1639.0	*	3	08081685	0.
1	1142	352	0.	.0	1630.0	*	2	09561019		0.	6.1	1639.0	*	3	08101686	0.
1	1144	353	0.	.0	1630.0	*	2	09581020		0.	6.1	1639.0	*	3	08121687	0.
1	1146	354	0.	.0	1630.0	*	2	10001021		0.	6.1	1639.0	*	3	08141688	0.
1	1148	355	0.	.0	1630.0	*	2	10021022		0.	6.1	1639.0	*	3	08161689	0.
1	1150	356	0.	.0	1630.0	*	2	10041023		0.	6.1	1639.0	*	3	08181690	0.
1	1152	357	0.	.0	1630.0	*	2	10061024		0.	6.1	1639.0	*	3	08201691	0.
1	1154	358	0.	.1	1630.3	*	2	10081025		0.	6.1	1639.0	*	3	08221692	0.
1	1156	359	0.	.2	1631.1	*	2	10101026		0.	6.1	1639.0	*	3	08241693	0.
1	1158	360	0.	.5	1631.9	*	2	10121027		0.	6.1	1639.0	*	3	08261694	0.
1	1200	361	0.	.8	1632.8	*	2	10141028		0.	6.1	1639.0	*	3	08281695	0.
1	1202	362	0.	1.3	1633.7	*	2	10161029		0.	6.1	1639.0	*	3	08301696	0.
1	1204	363	0.	1.8	1634.5	*	2	10181030		0.	6.1	1639.0	*	3	08321697	0.
1	1206	364	0.	2.4	1635.3	*	2	10201031		0.	6.1	1639.0	*	3	08341698	0.
1	1208	365	0.	3.0	1636.1	*	2	10221032		0.	6.1	1639.0	*	3	08361699	0.
1	1210	366	0.	3.7	1636.8	*	2	10241033		0.	6.1	1639.0	*	3	08381700	0.
1	1212	367	0.	4.4	1637.5	*	2	10261034		0.	6.1	1639.0	*	3	08401701	0.
1	1214	368	0.	5.1	1638.1	*	2	10281035		0.	6.1	1639.0	*	3	08421702	0.

1	1216	369	0.	5.7	1638.7	*	2	10301036	0.	6.1	1639.0	*	3	08441703	0.
1	1218	370	4.	6.3	1639.2	*	2	10321037	0.	6.1	1639.0	*	3	08461704	0.
1	1220	371	14.	6.9	1639.6	*	2	10341038	0.	6.1	1639.0	*	3	08481705	0.
1	1222	372	23.	7.4	1639.9	*	2	10361039	0.	6.1	1639.0	*	3	08501706	0.
1	1224	373	59.	7.8	1640.2	*	2	10381040	0.	6.1	1639.0	*	3	08521707	0.
1	1226	374	90.	8.0	1640.3	*	2	10401041	0.	6.1	1639.0	*	3	08541708	0.
1	1228	375	107.	8.1	1640.4	*	2	10421042	0.	6.1	1639.0	*	3	08561709	0.
1	1230	376	114.	8.2	1640.4	*	2	10441043	0.	6.1	1639.0	*	3	08581710	0.
1	1232	377	112.	8.2	1640.4	*	2	10461044	0.	6.1	1639.0	*	3	09001711	0.
1	1234	378	101.	8.1	1640.4	*	2	10481045	0.	6.1	1639.0	*	3	09021712	0.
1	1236	379	80.	7.9	1640.3	*	2	10501046	0.	6.1	1639.0	*	3	09041713	0.
1	1238	380	58.	7.7	1640.2	*	2	10521047	0.	6.1	1639.0	*	3	09061714	0.
1	1240	381	42.	7.6	1640.1	*	2	10541048	0.	6.1	1639.0	*	3	09081715	0.
1	1242	382	30.	7.5	1640.0	*	2	10561049	0.	6.1	1639.0	*	3	09101716	0.
1	1244	383	24.	7.5	1640.0	*	2	10581050	0.	6.1	1639.0	*	3	09121717	0.
1	1246	384	23.	7.4	1639.9	*	2	11001051	0.	6.1	1639.0	*	3	09141718	0.
1	1248	385	22.	7.3	1639.9	*	2	11021052	0.	6.1	1639.0	*	3	09161719	0.
1	1250	386	21.	7.3	1639.8	*	2	11041053	0.	6.1	1639.0	*	3	09181720	0.
1	1252	387	20.	7.2	1639.8	*	2	11061054	0.	6.1	1639.0	*	3	09201721	0.
1	1254	388	19.	7.2	1639.8	*	2	11081055	0.	6.1	1639.0	*	3	09221722	0.
1	1256	389	18.	7.1	1639.7	*	2	11101056	0.	6.1	1639.0	*	3	09241723	0.
1	1258	390	17.	7.1	1639.7	*	2	11121057	0.	6.1	1639.0	*	3	09261724	0.
1	1300	391	16.	7.0	1639.7	*	2	11141058	0.	6.1	1639.0	*	3	09281725	0.
1	1302	392	16.	7.0	1639.6	*	2	11161059	0.	6.1	1639.0	*	3	09301726	0.
1	1304	393	15.	6.9	1639.6	*	2	11181060	0.	6.1	1639.0	*	3	09321727	0.
1	1306	394	14.	6.9	1639.6	*	2	11201061	0.	6.1	1639.0	*	3	09341728	0.
1	1308	395	13.	6.8	1639.5	*	2	11221062	0.	6.1	1639.0	*	3	09361729	0.
1	1310	396	13.	6.8	1639.5	*	2	11241063	0.	6.1	1639.0	*	3	09381730	0.
1	1312	397	12.	6.8	1639.5	*	2	11261064	0.	6.1	1639.0	*	3	09401731	0.
1	1314	398	12.	6.7	1639.5	*	2	11281065	0.	6.1	1639.0	*	3	09421732	0.
1	1316	399	11.	6.7	1639.4	*	2	11301066	0.	6.1	1639.0	*	3	09441733	0.
1	1318	400	10.	6.7	1639.4	*	2	11321067	0.	6.1	1639.0	*	3	09461734	0.
1	1320	401	10.	6.7	1639.4	*	2	11341068	0.	6.1	1639.0	*	3	09481735	0.
1	1322	402	9.	6.6	1639.4	*	2	11361069	0.	6.1	1639.0	*	3	09501736	0.
1	1324	403	9.	6.6	1639.4	*	2	11381070	0.	6.1	1639.0	*	3	09521737	0.
1	1326	404	9.	6.6	1639.3	*	2	11401071	0.	6.1	1639.0	*	3	09541738	0.
1	1328	405	8.	6.6	1639.3	*	2	11421072	0.	6.1	1639.0	*	3	09561739	0.
1	1330	406	8.	6.5	1639.3	*	2	11441073	0.	6.1	1639.0	*	3	09581740	0.
1	1332	407	7.	6.5	1639.3	*	2	11461074	0.	6.1	1639.0	*	3	10001741	0.
1	1334	408	7.	6.5	1639.3	*	2	11481075	0.	6.1	1639.0	*	3	10021742	0.
1	1336	409	7.	6.5	1639.3	*	2	11501076	0.	6.1	1639.0	*	3	10041743	0.
1	1338	410	6.	6.5	1639.3	*	2	11521077	0.	6.1	1639.0	*	3	10061744	0.
1	1340	411	6.	6.4	1639.2	*	2	11541078	0.	6.1	1639.0	*	3	10081745	0.
1	1342	412	6.	6.4	1639.2	*	2	11561079	0.	6.1	1639.0	*	3	10101746	0.
1	1344	413	5.	6.4	1639.2	*	2	11581080	0.	6.1	1639.0	*	3	10121747	0.
1	1346	414	5.	6.4	1639.2	*	2	12001081	0.	6.1	1639.0	*	3	10141748	0.
1	1348	415	5.	6.4	1639.2	*	2	12021082	0.	6.1	1639.0	*	3	10161749	0.
1	1350	416	5.	6.4	1639.2	*	2	12041083	0.	6.1	1639.0	*	3	10181750	0.
1	1352	417	5.	6.4	1639.2	*	2	12061084	0.	6.1	1639.0	*	3	10201751	0.
1	1354	418	4.	6.3	1639.2	*	2	12081085	0.	6.1	1639.0	*	3	10221752	0.
1	1356	419	4.	6.3	1639.2	*	2	12101086	0.	6.1	1639.0	*	3	10241753	0.
1	1358	420	4.	6.3	1639.2	*	2	12121087	0.	6.1	1639.0	*	3	10261754	0.
1	1400	421	4.	6.3	1639.1	*	2	12141088	0.	6.1	1639.0	*	3	10281755	0.
1	1402	422	4.	6.3	1639.1	*	2	12161089	0.	6.1	1639.0	*	3	10301756	0.
1	1404	423	3.	6.3	1639.1	*	2	12181090	0.	6.1	1639.0	*	3	10321757	0.
1	1406	424	3.	6.3	1639.1	*	2	12201091	0.	6.1	1639.0	*	3	10341758	0.
1	1408	425	3.	6.3	1639.1	*	2	12221092	0.	6.1	1639.0	*	3	10361759	0.
1	1410	426	3.	6.3	1639.1	*	2	12241093	0.	6.1	1639.0	*	3	10381760	0.
1	1412	427	3.	6.3	1639.1	*	2	12261094	0.	6.1	1639.0	*	3	10401761	0.
1	1414	428	3.	6.2	1639.1	*	2	12281095	0.	6.1	1639.0	*	3	10421762	0.
1	1416	429	2.	6.2	1639.1	*	2	12301096	0.	6.1	1639.0	*	3	10441763	0.
1	1418	430	2.	6.2	1639.1	*	2	12321097	0.	6.1	1639.0	*	3	10461764	0.
1	1420	431	2.	6.2	1639.1	*	2	12341098	0.	6.1	1639.0	*	3	10481765	0.
1	1422	432	2.	6.2	1639.1	*	2	12361099	0.	6.1	1639.0	*	3	10501766	0.
1	1424	433	2.	6.2	1639.1	*	2	12381100	0.	6.1	1639.0	*	3	10521767	0.
1	1426	434	2.	6.2	1639.1	*	2	12401101	0.	6.1	1639.0	*	3	10541768	0.
1	1428	435	2.	6.2	1639.1	*	2	12421102	0.	6.1	1639.0	*	3	10561769	0.
1	1430	436	2.	6.2	1639.1	*	2	12441103	0.	6.1	1639.0	*	3	10581770	0.
1	1432	437	2.	6.2	1639.1	*	2	12461104	0.	6.1	1639.0	*	3	11001771	0.
1	1434	438	2.	6.2	1639.1	*	2	12481105	0.	6.1	1639.0	*	3	11021772	0.
1	1436	439	2.	6.2	1639.1	*	2	12501106	0.	6.1	1639.0	*	3	11041773	0.
1	1438	440	1.	6.2	1639.1	*	2	12521107	0.	6.1	1639.0	*	3	11061774	0.
1	1440	441	1.	6.2	1639.1	*	2	12541108	0.	6.1	1639.0	*	3	11081775	0.
1	1442	442	1.	6.2	1639.1	*	2	12561109	0.	6.1	1639.0	*	3	11101776	0.
1	1444	443	1.	6.2	1639.0	*	2	12581110	0.	6.1	1639.0	*	3	11121777	0.
1	1446	444	1.	6.2	1639.0	*	2	13001111	0.	6.1	1639.0	*	3	11141778	0.
1	1448	445	1.	6.2	1639.0	*	2	13021112	0.	6.1	1639.0	*	3	11161779	0.
1	1450	446	1.	6.2	1639.0	*	2	13041113	0.	6.1	1639.0	*	3	11181780	0.
1	1452	447	1.	6.2	1639.0	*	2	13061114	0.	6.1	1639.0	*	3	11201781	0.
1	1454	448	1.	6.2	1639.0	*	2	13081115	0.	6.1	1639.0	*	3	11221782	0.
1	1456	449	1.	6.2	1639.0	*	2	13101116	0.	6.1	1639.0	*	3	11241783	0.
1	1458	450	1.	6.1	1639.0	*	2	13121117	0.	6.1	1639.0	*	3	11261784	0.
1	1500	451	1.	6.1	1639.0	*	2	13141118	0.	6.1	1639.0	*	3	11281785	0.
1	1502	452	1.	6.1	1639.0	*	2	13161119	0.	6.1	1639.0	*	3	11301786	0.

1	1504	453	1.	6.1	1639.0	*	2	13181120	0.	6.1	1639.0	*	3	11321787	0.
1	1506	454	1.	6.1	1639.0	*	2	13201121	0.	6.1	1639.0	*	3	11341788	0.
1	1508	455	1.	6.1	1639.0	*	2	13221122	0.	6.1	1639.0	*	3	11361789	0.
1	1510	456	1.	6.1	1639.0	*	2	13241123	0.	6.1	1639.0	*	3	11381790	0.
1	1512	457	1.	6.1	1639.0	*	2	13261124	0.	6.1	1639.0	*	3	11401791	0.
1	1514	458	1.	6.1	1639.0	*	2	13281125	0.	6.1	1639.0	*	3	11421792	0.
1	1516	459	1.	6.1	1639.0	*	2	13301126	0.	6.1	1639.0	*	3	11441793	0.
1	1518	460	1.	6.1	1639.0	*	2	13321127	0.	6.1	1639.0	*	3	11461794	0.
1	1520	461	1.	6.1	1639.0	*	2	13341128	0.	6.1	1639.0	*	3	11481795	0.
1	1522	462	0.	6.1	1639.0	*	2	13361129	0.	6.1	1639.0	*	3	11501796	0.
1	1524	463	0.	6.1	1639.0	*	2	13381130	0.	6.1	1639.0	*	3	11521797	0.
1	1526	464	0.	6.1	1639.0	*	2	13401131	0.	6.1	1639.0	*	3	11541798	0.
1	1528	465	0.	6.1	1639.0	*	2	13421132	0.	6.1	1639.0	*	3	11561799	0.
1	1530	466	0.	6.1	1639.0	*	2	13441133	0.	6.1	1639.0	*	3	11581800	0.
1	1532	467	0.	6.1	1639.0	*	2	13461134	0.	6.1	1639.0	*	3	12001801	0.
1	1534	468	0.	6.1	1639.0	*	2	13481135	0.	6.1	1639.0	*	3	12021802	0.
1	1536	469	0.	6.1	1639.0	*	2	13501136	0.	6.1	1639.0	*	3	12041803	0.
1	1538	470	0.	6.1	1639.0	*	2	13521137	0.	6.1	1639.0	*	3	12061804	0.
1	1540	471	0.	6.1	1639.0	*	2	13541138	0.	6.1	1639.0	*	3	12081805	0.
1	1542	472	0.	6.1	1639.0	*	2	13561139	0.	6.1	1639.0	*	3	12101806	0.
1	1544	473	0.	6.1	1639.0	*	2	13581140	0.	6.1	1639.0	*	3	12121807	0.
1	1546	474	0.	6.1	1639.0	*	2	14001141	0.	6.1	1639.0	*	3	12141808	0.
1	1548	475	0.	6.1	1639.0	*	2	14021142	0.	6.1	1639.0	*	3	12161809	0.
1	1550	476	0.	6.1	1639.0	*	2	14041143	0.	6.1	1639.0	*	3	12181810	0.
1	1552	477	0.	6.1	1639.0	*	2	14061144	0.	6.1	1639.0	*	3	12201811	0.
1	1554	478	0.	6.1	1639.0	*	2	14081145	0.	6.1	1639.0	*	3	12221812	0.
1	1556	479	0.	6.1	1639.0	*	2	14101146	0.	6.1	1639.0	*	3	12241813	0.
1	1558	480	0.	6.1	1639.0	*	2	14121147	0.	6.1	1639.0	*	3	12261814	0.
1	1600	481	0.	6.1	1639.0	*	2	14141148	0.	6.1	1639.0	*	3	12281815	0.
1	1602	482	0.	6.1	1639.0	*	2	14161149	0.	6.1	1639.0	*	3	12301816	0.
1	1604	483	0.	6.1	1639.0	*	2	14181150	0.	6.1	1639.0	*	3	12321817	0.
1	1606	484	0.	6.1	1639.0	*	2	14201151	0.	6.1	1639.0	*	3	12341818	0.
1	1608	485	0.	6.1	1639.0	*	2	14221152	0.	6.1	1639.0	*	3	12361819	0.
1	1610	486	0.	6.1	1639.0	*	2	14241153	0.	6.1	1639.0	*	3	12381820	0.
1	1612	487	0.	6.1	1639.0	*	2	14261154	0.	6.1	1639.0	*	3	12401821	0.
1	1614	488	0.	6.1	1639.0	*	2	14281155	0.	6.1	1639.0	*	3	12421822	0.
1	1616	489	0.	6.1	1639.0	*	2	14301156	0.	6.1	1639.0	*	3	12441823	0.
1	1618	490	0.	6.1	1639.0	*	2	14321157	0.	6.1	1639.0	*	3	12461824	0.
1	1620	491	0.	6.1	1639.0	*	2	14341158	0.	6.1	1639.0	*	3	12481825	0.
1	1622	492	0.	6.1	1639.0	*	2	14361159	0.	6.1	1639.0	*	3	12501826	0.
1	1624	493	0.	6.1	1639.0	*	2	14381160	0.	6.1	1639.0	*	3	12521827	0.
1	1626	494	0.	6.1	1639.0	*	2	14401161	0.	6.1	1639.0	*	3	12541828	0.
1	1628	495	0.	6.1	1639.0	*	2	14421162	0.	6.1	1639.0	*	3	12561829	0.
1	1630	496	0.	6.1	1639.0	*	2	14441163	0.	6.1	1639.0	*	3	12581830	0.
1	1632	497	0.	6.1	1639.0	*	2	14461164	0.	6.1	1639.0	*	3	13001831	0.
1	1634	498	0.	6.1	1639.0	*	2	14481165	0.	6.1	1639.0	*	3	13021832	0.
1	1636	499	0.	6.1	1639.0	*	2	14501166	0.	6.1	1639.0	*	3	13041833	0.
1	1638	500	0.	6.1	1639.0	*	2	14521167	0.	6.1	1639.0	*	3	13061834	0.
1	1640	501	0.	6.1	1639.0	*	2	14541168	0.	6.1	1639.0	*	3	13081835	0.
1	1642	502	0.	6.1	1639.0	*	2	14561169	0.	6.1	1639.0	*	3	13101836	0.
1	1644	503	0.	6.1	1639.0	*	2	14581170	0.	6.1	1639.0	*	3	13121837	0.
1	1646	504	0.	6.1	1639.0	*	2	15001171	0.	6.1	1639.0	*	3	13141838	0.
1	1648	505	0.	6.1	1639.0	*	2	15021172	0.	6.1	1639.0	*	3	13161839	0.
1	1650	506	0.	6.1	1639.0	*	2	15041173	0.	6.1	1639.0	*	3	13181840	0.
1	1652	507	0.	6.1	1639.0	*	2	15061174	0.	6.1	1639.0	*	3	13201841	0.
1	1654	508	0.	6.1	1639.0	*	2	15081175	0.	6.1	1639.0	*	3	13221842	0.
1	1656	509	0.	6.1	1639.0	*	2	15101176	0.	6.1	1639.0	*	3	13241843	0.
1	1658	510	0.	6.1	1639.0	*	2	15121177	0.	6.1	1639.0	*	3	13261844	0.
1	1700	511	0.	6.1	1639.0	*	2	15141178	0.	6.1	1639.0	*	3	13281845	0.
1	1702	512	0.	6.1	1639.0	*	2	15161179	0.	6.1	1639.0	*	3	13301846	0.
1	1704	513	0.	6.1	1639.0	*	2	15181180	0.	6.1	1639.0	*	3	13321847	0.
1	1706	514	0.	6.1	1639.0	*	2	15201181	0.	6.1	1639.0	*	3	13341848	0.
1	1708	515	0.	6.1	1639.0	*	2	15221182	0.	6.1	1639.0	*	3	13361849	0.
1	1710	516	0.	6.1	1639.0	*	2	15241183	0.	6.1	1639.0	*	3	13381850	0.
1	1712	517	0.	6.1	1639.0	*	2	15261184	0.	6.1	1639.0	*	3	13401851	0.
1	1714	518	0.	6.1	1639.0	*	2	15281185	0.	6.1	1639.0	*	3	13421852	0.
1	1716	519	0.	6.1	1639.0	*	2	15301186	0.	6.1	1639.0	*	3	13441853	0.
1	1718	520	0.	6.1	1639.0	*	2	15321187	0.	6.1	1639.0	*	3	13461854	0.
1	1720	521	0.	6.1	1639.0	*	2	15341188	0.	6.1	1639.0	*	3	13481855	0.
1	1722	522	0.	6.1	1639.0	*	2	15361189	0.	6.1	1639.0	*	3	13501856	0.
1	1724	523	0.	6.1	1639.0	*	2	15381190	0.	6.1	1639.0	*	3	13521857	0.
1	1726	524	0.	6.1	1639.0	*	2	15401191	0.	6.1	1639.0	*	3	13541858	0.
1	1728	525	0.	6.1	1639.0	*	2	15421192	0.	6.1	1639.0	*	3	13561859	0.
1	1730	526	0.	6.1	1639.0	*	2	15441193	0.	6.1	1639.0	*	3	13581860	0.
1	1732	527	0.	6.1	1639.0	*	2	15461194	0.	6.1	1639.0	*	3	14001861	0.
1	1734	528	0.	6.1	1639.0	*	2	15481195	0.	6.1	1639.0	*	3	14021862	0.
1	1736	529	0.	6.1	1639.0	*	2	15501196	0.	6.1	1639.0	*	3	14041863	0.
1	1738	530	0.	6.1	1639.0	*	2	15521197	0.	6.1	1639.0	*	3	14061864	0.
1	1740	531	0.	6.1	1639.0	*	2	15541198	0.	6.1	1639.0	*	3	14081865	0.
1	1742	532	0.	6.1	1639.0	*	2	15561199	0.	6.1	1639.0	*	3	14101866	0.
1	1744	533	0.	6.1	1639.0	*	2	15581200	0.	6.1	1639.0	*	3	14121867	0.
1	1746	534	0.	6.1	1639.0	*	2	16001201	0.	6.1	1639.0	*	3	14141868	0.
1	1748	535	0.	6.1	1639.0	*	2	16021202	0.	6.1	1639.0	*	3	14161869	0.
1	1750	536	0.	6.1	1639.0	*	2	16041203	0.	6.1	1639.0	*	3	14181870	0.

1	1752	537	0.	6.1	1639.0	*	2	16061204	0.	6.1	1639.0	*	3	14201871	0.
1	1754	538	0.	6.1	1639.0	*	2	16081205	0.	6.1	1639.0	*	3	14221872	0.
1	1756	539	0.	6.1	1639.0	*	2	16101206	0.	6.1	1639.0	*	3	14241873	0.
1	1758	540	0.	6.1	1639.0	*	2	16121207	0.	6.1	1639.0	*	3	14261874	0.
1	1800	541	0.	6.1	1639.0	*	2	16141208	0.	6.1	1639.0	*	3	14281875	0.
1	1802	542	0.	6.1	1639.0	*	2	16161209	0.	6.1	1639.0	*	3	14301876	0.
1	1804	543	0.	6.1	1639.0	*	2	16181210	0.	6.1	1639.0	*	3	14321877	0.
1	1806	544	0.	6.1	1639.0	*	2	16201211	0.	6.1	1639.0	*	3	14341878	0.
1	1808	545	0.	6.1	1639.0	*	2	16221212	0.	6.1	1639.0	*	3	14361879	0.
1	1810	546	0.	6.1	1639.0	*	2	16241213	0.	6.1	1639.0	*	3	14381880	0.
1	1812	547	0.	6.1	1639.0	*	2	16261214	0.	6.1	1639.0	*	3	14401881	0.
1	1814	548	0.	6.1	1639.0	*	2	16281215	0.	6.1	1639.0	*	3	14421882	0.
1	1816	549	0.	6.1	1639.0	*	2	16301216	0.	6.1	1639.0	*	3	14441883	0.
1	1818	550	0.	6.1	1639.0	*	2	16321217	0.	6.1	1639.0	*	3	14461884	0.
1	1820	551	0.	6.1	1639.0	*	2	16341218	0.	6.1	1639.0	*	3	14481885	0.
1	1822	552	0.	6.1	1639.0	*	2	16361219	0.	6.1	1639.0	*	3	14501886	0.
1	1824	553	0.	6.1	1639.0	*	2	16381220	0.	6.1	1639.0	*	3	14521887	0.
1	1826	554	0.	6.1	1639.0	*	2	16401221	0.	6.1	1639.0	*	3	14541888	0.
1	1828	555	0.	6.1	1639.0	*	2	16421222	0.	6.1	1639.0	*	3	14561889	0.
1	1830	556	0.	6.1	1639.0	*	2	16441223	0.	6.1	1639.0	*	3	14581890	0.
1	1832	557	0.	6.1	1639.0	*	2	16461224	0.	6.1	1639.0	*	3	15001891	0.
1	1834	558	0.	6.1	1639.0	*	2	16481225	0.	6.1	1639.0	*	3	15021892	0.
1	1836	559	0.	6.1	1639.0	*	2	16501226	0.	6.1	1639.0	*	3	15041893	0.
1	1838	560	0.	6.1	1639.0	*	2	16521227	0.	6.1	1639.0	*	3	15061894	0.
1	1840	561	0.	6.1	1639.0	*	2	16541228	0.	6.1	1639.0	*	3	15081895	0.
1	1842	562	0.	6.1	1639.0	*	2	16561229	0.	6.1	1639.0	*	3	15101896	0.
1	1844	563	0.	6.1	1639.0	*	2	16581230	0.	6.1	1639.0	*	3	15121897	0.
1	1846	564	0.	6.1	1639.0	*	2	17001231	0.	6.1	1639.0	*	3	15141898	0.
1	1848	565	0.	6.1	1639.0	*	2	17021232	0.	6.1	1639.0	*	3	15161899	0.
1	1850	566	0.	6.1	1639.0	*	2	17041233	0.	6.1	1639.0	*	3	15181900	0.
1	1852	567	0.	6.1	1639.0	*	2	17061234	0.	6.1	1639.0	*	3	15201901	0.
1	1854	568	0.	6.1	1639.0	*	2	17081235	0.	6.1	1639.0	*	3	15221902	0.
1	1856	569	0.	6.1	1639.0	*	2	17101236	0.	6.1	1639.0	*	3	15241903	0.
1	1858	570	0.	6.1	1639.0	*	2	17121237	0.	6.1	1639.0	*	3	15261904	0.
1	1900	571	0.	6.1	1639.0	*	2	17141238	0.	6.1	1639.0	*	3	15281905	0.
1	1902	572	0.	6.1	1639.0	*	2	17161239	0.	6.1	1639.0	*	3	15301906	0.
1	1904	573	0.	6.1	1639.0	*	2	17181240	0.	6.1	1639.0	*	3	15321907	0.
1	1906	574	0.	6.1	1639.0	*	2	17201241	0.	6.1	1639.0	*	3	15341908	0.
1	1908	575	0.	6.1	1639.0	*	2	17221242	0.	6.1	1639.0	*	3	15361909	0.
1	1910	576	0.	6.1	1639.0	*	2	17241243	0.	6.1	1639.0	*	3	15381910	0.
1	1912	577	0.	6.1	1639.0	*	2	17261244	0.	6.1	1639.0	*	3	15401911	0.
1	1914	578	0.	6.1	1639.0	*	2	17281245	0.	6.1	1639.0	*	3	15421912	0.
1	1916	579	0.	6.1	1639.0	*	2	17301246	0.	6.1	1639.0	*	3	15441913	0.
1	1918	580	0.	6.1	1639.0	*	2	17321247	0.	6.1	1639.0	*	3	15461914	0.
1	1920	581	0.	6.1	1639.0	*	2	17341248	0.	6.1	1639.0	*	3	15481915	0.
1	1922	582	0.	6.1	1639.0	*	2	17361249	0.	6.1	1639.0	*	3	15501916	0.
1	1924	583	0.	6.1	1639.0	*	2	17381250	0.	6.1	1639.0	*	3	15521917	0.
1	1926	584	0.	6.1	1639.0	*	2	17401251	0.	6.1	1639.0	*	3	15541918	0.
1	1928	585	0.	6.1	1639.0	*	2	17421252	0.	6.1	1639.0	*	3	15561919	0.
1	1930	586	0.	6.1	1639.0	*	2	17441253	0.	6.1	1639.0	*	3	15581920	0.
1	1932	587	0.	6.1	1639.0	*	2	17461254	0.	6.1	1639.0	*	3	16001921	0.
1	1934	588	0.	6.1	1639.0	*	2	17481255	0.	6.1	1639.0	*	3	16021922	0.
1	1936	589	0.	6.1	1639.0	*	2	17501256	0.	6.1	1639.0	*	3	16041923	0.
1	1938	590	0.	6.1	1639.0	*	2	17521257	0.	6.1	1639.0	*	3	16061924	0.
1	1940	591	0.	6.1	1639.0	*	2	17541258	0.	6.1	1639.0	*	3	16081925	0.
1	1942	592	0.	6.1	1639.0	*	2	17561259	0.	6.1	1639.0	*	3	16101926	0.
1	1944	593	0.	6.1	1639.0	*	2	17581260	0.	6.1	1639.0	*	3	16121927	0.
1	1946	594	0.	6.1	1639.0	*	2	18001261	0.	6.1	1639.0	*	3	16141928	0.
1	1948	595	0.	6.1	1639.0	*	2	18021262	0.	6.1	1639.0	*	3	16161929	0.
1	1950	596	0.	6.1	1639.0	*	2	18041263	0.	6.1	1639.0	*	3	16181930	0.
1	1952	597	0.	6.1	1639.0	*	2	18061264	0.	6.1	1639.0	*	3	16201931	0.
1	1954	598	0.	6.1	1639.0	*	2	18081265	0.	6.1	1639.0	*	3	16221932	0.
1	1956	599	0.	6.1	1639.0	*	2	18101266	0.	6.1	1639.0	*	3	16241933	0.
1	1958	600	0.	6.1	1639.0	*	2	18121267	0.	6.1	1639.0	*	3	16261934	0.
1	2000	601	0.	6.1	1639.0	*	2	18141268	0.	6.1	1639.0	*	3	16281935	0.
1	2002	602	0.	6.1	1639.0	*	2	18161269	0.	6.1	1639.0	*	3	16301936	0.
1	2004	603	0.	6.1	1639.0	*	2	18181270	0.	6.1	1639.0	*	3	16321937	0.
1	2006	604	0.	6.1	1639.0	*	2	18201271	0.	6.1	1639.0	*	3	16341938	0.
1	2008	605	0.	6.1	1639.0	*	2	18221272	0.	6.1	1639.0	*	3	16361939	0.
1	2010	606	0.	6.1	1639.0	*	2	18241273	0.	6.1	1639.0	*	3	16381940	0.
1	2012	607	0.	6.1	1639.0	*	2	18261274	0.	6.1	1639.0	*	3	16401941	0.
1	2014	608	0.	6.1	1639.0	*	2	18281275	0.	6.1	1639.0	*	3	16421942	0.
1	2016	609	0.	6.1	1639.0	*	2	18301276	0.	6.1	1639.0	*	3	16441943	0.
1	2018	610	0.	6.1	1639.0	*	2	18321277	0.	6.1	1639.0	*	3	16461944	0.
1	2020	611	0.	6.1	1639.0	*	2	18341278	0.	6.1	1639.0	*	3	16481945	0.
1	2022	612	0.	6.1	1639.0	*	2	18361279	0.	6.1	1639.0	*	3	16501946	0.
1	2024	613	0.	6.1	1639.0	*	2	18381280	0.	6.1	1639.0	*	3	16521947	0.
1	2026	614	0.	6.1	1639.0	*	2	18401281	0.	6.1	1639.0	*	3	16541948	0.
1	2028	615	0.	6.1	1639.0	*	2	18421282	0.	6.1	1639.0	*	3	16561949	0.
1	2030	616	0.	6.1	1639.0	*	2	18441283	0.	6.1	1639.0	*	3	16581950	0.
1	2032	617	0.	6.1	1639.0	*	2	18461284	0.	6.1	1639.0	*	3	17001951	0.
1	2034	618	0.	6.1	1639.0	*	2	18481285	0.	6.1	1639.0	*	3	17021952	0.
1	2036	619	0.	6.1	1639.0	*	2	18501286	0.	6.1	1639.0	*	3	17041953	0.
1	2038	620	0.	6.1	1639.0	*	2	18521287	0.	6.1	1639.0	*	3	17061954	0.

1	2040	621	0.	6.1	1639.0	*	2	18541288	0.	6.1	1639.0	*	3	17081955	0.
1	2042	622	0.	6.1	1639.0	*	2	18561289	0.	6.1	1639.0	*	3	17101956	0.
1	2044	623	0.	6.1	1639.0	*	2	18581290	0.	6.1	1639.0	*	3	17121957	0.
1	2046	624	0.	6.1	1639.0	*	2	19001291	0.	6.1	1639.0	*	3	17141958	0.
1	2048	625	0.	6.1	1639.0	*	2	19021292	0.	6.1	1639.0	*	3	17161959	0.
1	2050	626	0.	6.1	1639.0	*	2	19041293	0.	6.1	1639.0	*	3	17181960	0.
1	2052	627	0.	6.1	1639.0	*	2	19061294	0.	6.1	1639.0	*	3	17201961	0.
1	2054	628	0.	6.1	1639.0	*	2	19081295	0.	6.1	1639.0	*	3	17221962	0.
1	2056	629	0.	6.1	1639.0	*	2	19101296	0.	6.1	1639.0	*	3	17241963	0.
1	2058	630	0.	6.1	1639.0	*	2	19121297	0.	6.1	1639.0	*	3	17261964	0.
1	2100	631	0.	6.1	1639.0	*	2	19141298	0.	6.1	1639.0	*	3	17281965	0.
1	2102	632	0.	6.1	1639.0	*	2	19161299	0.	6.1	1639.0	*	3	17301966	0.
1	2104	633	0.	6.1	1639.0	*	2	19181300	0.	6.1	1639.0	*	3	17321967	0.
1	2106	634	0.	6.1	1639.0	*	2	19201301	0.	6.1	1639.0	*	3	17341968	0.
1	2108	635	0.	6.1	1639.0	*	2	19221302	0.	6.1	1639.0	*	3	17361969	0.
1	2110	636	0.	6.1	1639.0	*	2	19241303	0.	6.1	1639.0	*	3	17381970	0.
1	2112	637	0.	6.1	1639.0	*	2	19261304	0.	6.1	1639.0	*	3	17401971	0.
1	2114	638	0.	6.1	1639.0	*	2	19281305	0.	6.1	1639.0	*	3	17421972	0.
1	2116	639	0.	6.1	1639.0	*	2	19301306	0.	6.1	1639.0	*	3	17441973	0.
1	2118	640	0.	6.1	1639.0	*	2	19321307	0.	6.1	1639.0	*	3	17461974	0.
1	2120	641	0.	6.1	1639.0	*	2	19341308	0.	6.1	1639.0	*	3	17481975	0.
1	2122	642	0.	6.1	1639.0	*	2	19361309	0.	6.1	1639.0	*	3	17501976	0.
1	2124	643	0.	6.1	1639.0	*	2	19381310	0.	6.1	1639.0	*	3	17521977	0.
1	2126	644	0.	6.1	1639.0	*	2	19401311	0.	6.1	1639.0	*	3	17541978	0.
1	2128	645	0.	6.1	1639.0	*	2	19421312	0.	6.1	1639.0	*	3	17561979	0.
1	2130	646	0.	6.1	1639.0	*	2	19441313	0.	6.1	1639.0	*	3	17581980	0.
1	2132	647	0.	6.1	1639.0	*	2	19461314	0.	6.1	1639.0	*	3	18001981	0.
1	2134	648	0.	6.1	1639.0	*	2	19481315	0.	6.1	1639.0	*	3	18021982	0.
1	2136	649	0.	6.1	1639.0	*	2	19501316	0.	6.1	1639.0	*	3	18041983	0.
1	2138	650	0.	6.1	1639.0	*	2	19521317	0.	6.1	1639.0	*	3	18061984	0.
1	2140	651	0.	6.1	1639.0	*	2	19541318	0.	6.1	1639.0	*	3	18081985	0.
1	2142	652	0.	6.1	1639.0	*	2	19561319	0.	6.1	1639.0	*	3	18101986	0.
1	2144	653	0.	6.1	1639.0	*	2	19581320	0.	6.1	1639.0	*	3	18121987	0.
1	2146	654	0.	6.1	1639.0	*	2	20001321	0.	6.1	1639.0	*	3	18141988	0.
1	2148	655	0.	6.1	1639.0	*	2	20021322	0.	6.1	1639.0	*	3	18161989	0.
1	2150	656	0.	6.1	1639.0	*	2	20041323	0.	6.1	1639.0	*	3	18181990	0.
1	2152	657	0.	6.1	1639.0	*	2	20061324	0.	6.1	1639.0	*	3	18201991	0.
1	2154	658	0.	6.1	1639.0	*	2	20081325	0.	6.1	1639.0	*	3	18221992	0.
1	2156	659	0.	6.1	1639.0	*	2	20101326	0.	6.1	1639.0	*	3	18241993	0.
1	2158	660	0.	6.1	1639.0	*	2	20121327	0.	6.1	1639.0	*	3	18261994	0.
1	2200	661	0.	6.1	1639.0	*	2	20141328	0.	6.1	1639.0	*	3	18281995	0.
1	2202	662	0.	6.1	1639.0	*	2	20161329	0.	6.1	1639.0	*	3	18301996	0.
1	2204	663	0.	6.1	1639.0	*	2	20181330	0.	6.1	1639.0	*	3	18321997	0.
1	2206	664	0.	6.1	1639.0	*	2	20201331	0.	6.1	1639.0	*	3	18341998	0.
1	2208	665	0.	6.1	1639.0	*	2	20221332	0.	6.1	1639.0	*	3	18361999	0.
1	2210	666	0.	6.1	1639.0	*	2	20241333	0.	6.1	1639.0	*	3	18382000	0.
1	2212	667	0.	6.1	1639.0	*	2	20261334	0.	6.1	1639.0	*			

****

PEAK FLOW	TIME		MAXIMUM AVERAGE FLOW 6-HR	24-HR	72-HR	66.63-HR
+ (CFS)	(HR)	(CFS)				
+ 114.	12.50		7.	2.	1.	1.
		(INCHES)	.044	.044	.044	.044
		(AC-FT)	4.	4.	4.	4.

PEAK STORAGE	TIME	MAXIMUM AVERAGE STORAGE 6-HR	24-HR	72-HR	66.63-HR
+ (AC-FT)	(HR)				
8.	12.50	6.	6.	5.	5.

PEAK STAGE	TIME	MAXIMUM AVERAGE STAGE 6-HR	24-HR	72-HR	66.63-HR
+ (FEET)	(HR)				
1640.45	12.50	1639.19	1639.05	1637.39	1637.39

CUMULATIVE AREA = 1.59 SQ MI

****

HYDROGRAPH AT SMCDB
TRANSPOSITION AREA 13.7 SQ MI

****

DA	MON	HRMN	ORD	OUTFLOW	STORAGE	STAGE	*	DA	MON	HRMN	ORD	OUTFLOW	STORAGE	STAGE	*	DA	MON	HRMN	ORD	OUTFLOW	STOR
1		0000	1	0.	.0	1630.0	*	1		2214	668	0.	6.1	1639.0	*	2		20281335		0.	
1		0002	2	0.	.0	1630.0	*	1		2216	669	0.	6.1	1639.0	*	2		20301336		0.	
1		0004	3	0.	.0	1630.0	*	1		2218	670	0.	6.1	1639.0	*	2		20321337		0.	
1		0006	4	0.	.0	1630.0	*	1		2220	671	0.	6.1	1639.0	*	2		20341338		0.	

1	0008	5	0.	.0	1630.0	*	1	2222	672	0.	6.1	1639.0	*	2	20361339	0.
1	0010	6	0.	.0	1630.0	*	1	2224	673	0.	6.1	1639.0	*	2	20381340	0.
1	0012	7	0.	.0	1630.0	*	1	2226	674	0.	6.1	1639.0	*	2	20401341	0.
1	0014	8	0.	.0	1630.0	*	1	2228	675	0.	6.1	1639.0	*	2	20421342	0.
1	0016	9	0.	.0	1630.0	*	1	2230	676	0.	6.1	1639.0	*	2	20441343	0.
1	0018	10	0.	.0	1630.0	*	1	2232	677	0.	6.1	1639.0	*	2	20461344	0.
1	0020	11	0.	.0	1630.0	*	1	2234	678	0.	6.1	1639.0	*	2	20481345	0.
1	0022	12	0.	.0	1630.0	*	1	2236	679	0.	6.1	1639.0	*	2	20501346	0.
1	0024	13	0.	.0	1630.0	*	1	2238	680	0.	6.1	1639.0	*	2	20521347	0.
1	0026	14	0.	.0	1630.0	*	1	2240	681	0.	6.1	1639.0	*	2	20541348	0.
1	0028	15	0.	.0	1630.0	*	1	2242	682	0.	6.1	1639.0	*	2	20561349	0.
1	0030	16	0.	.0	1630.0	*	1	2244	683	0.	6.1	1639.0	*	2	20581350	0.
1	0032	17	0.	.0	1630.0	*	1	2246	684	0.	6.1	1639.0	*	2	21001351	0.
1	0034	18	0.	.0	1630.0	*	1	2248	685	0.	6.1	1639.0	*	2	21021352	0.
1	0036	19	0.	.0	1630.0	*	1	2250	686	0.	6.1	1639.0	*	2	21041353	0.
1	0038	20	0.	.0	1630.0	*	1	2252	687	0.	6.1	1639.0	*	2	21061354	0.
1	0040	21	0.	.0	1630.0	*	1	2254	688	0.	6.1	1639.0	*	2	21081355	0.
1	0042	22	0.	.0	1630.0	*	1	2256	689	0.	6.1	1639.0	*	2	21101356	0.
1	0044	23	0.	.0	1630.0	*	1	2258	690	0.	6.1	1639.0	*	2	21121357	0.
1	0046	24	0.	.0	1630.0	*	1	2300	691	0.	6.1	1639.0	*	2	21141358	0.
1	0048	25	0.	.0	1630.0	*	1	2302	692	0.	6.1	1639.0	*	2	21161359	0.
1	0050	26	0.	.0	1630.0	*	1	2304	693	0.	6.1	1639.0	*	2	21181360	0.
1	0052	27	0.	.0	1630.0	*	1	2306	694	0.	6.1	1639.0	*	2	21201361	0.
1	0054	28	0.	.0	1630.0	*	1	2308	695	0.	6.1	1639.0	*	2	21221362	0.
1	0056	29	0.	.0	1630.0	*	1	2310	696	0.	6.1	1639.0	*	2	21241363	0.
1	0058	30	0.	.0	1630.0	*	1	2312	697	0.	6.1	1639.0	*	2	21261364	0.
1	0100	31	0.	.0	1630.0	*	1	2314	698	0.	6.1	1639.0	*	2	21281365	0.
1	0102	32	0.	.0	1630.0	*	1	2316	699	0.	6.1	1639.0	*	2	21301366	0.
1	0104	33	0.	.0	1630.0	*	1	2318	700	0.	6.1	1639.0	*	2	21321367	0.
1	0106	34	0.	.0	1630.0	*	1	2320	701	0.	6.1	1639.0	*	2	21341368	0.
1	0108	35	0.	.0	1630.0	*	1	2322	702	0.	6.1	1639.0	*	2	21361369	0.
1	0110	36	0.	.0	1630.0	*	1	2324	703	0.	6.1	1639.0	*	2	21381370	0.
1	0112	37	0.	.0	1630.0	*	1	2326	704	0.	6.1	1639.0	*	2	21401371	0.
1	0114	38	0.	.0	1630.0	*	1	2328	705	0.	6.1	1639.0	*	2	21421372	0.
1	0116	39	0.	.0	1630.0	*	1	2330	706	0.	6.1	1639.0	*	2	21441373	0.
1	0118	40	0.	.0	1630.0	*	1	2332	707	0.	6.1	1639.0	*	2	21461374	0.
1	0120	41	0.	.0	1630.0	*	1	2334	708	0.	6.1	1639.0	*	2	21481375	0.
1	0122	42	0.	.0	1630.0	*	1	2336	709	0.	6.1	1639.0	*	2	21501376	0.
1	0124	43	0.	.0	1630.0	*	1	2338	710	0.	6.1	1639.0	*	2	21521377	0.
1	0126	44	0.	.0	1630.0	*	1	2340	711	0.	6.1	1639.0	*	2	21541378	0.
1	0128	45	0.	.0	1630.0	*	1	2342	712	0.	6.1	1639.0	*	2	21561379	0.
1	0130	46	0.	.0	1630.0	*	1	2344	713	0.	6.1	1639.0	*	2	21581380	0.
1	0132	47	0.	.0	1630.0	*	1	2346	714	0.	6.1	1639.0	*	2	22001381	0.
1	0134	48	0.	.0	1630.0	*	1	2348	715	0.	6.1	1639.0	*	2	22021382	0.
1	0136	49	0.	.0	1630.0	*	1	2350	716	0.	6.1	1639.0	*	2	22041383	0.
1	0138	50	0.	.0	1630.0	*	1	2352	717	0.	6.1	1639.0	*	2	22061384	0.
1	0140	51	0.	.0	1630.0	*	1	2354	718	0.	6.1	1639.0	*	2	22081385	0.
1	0142	52	0.	.0	1630.0	*	1	2356	719	0.	6.1	1639.0	*	2	22101386	0.
1	0144	53	0.	.0	1630.0	*	1	2358	720	0.	6.1	1639.0	*	2	22121387	0.
1	0146	54	0.	.0	1630.0	*	2	0000	721	0.	6.1	1639.0	*	2	22141388	0.
1	0148	55	0.	.0	1630.0	*	2	0002	722	0.	6.1	1639.0	*	2	22161389	0.
1	0150	56	0.	.0	1630.0	*	2	0004	723	0.	6.1	1639.0	*	2	22181390	0.
1	0152	57	0.	.0	1630.0	*	2	0006	724	0.	6.1	1639.0	*	2	22201391	0.
1	0154	58	0.	.0	1630.0	*	2	0008	725	0.	6.1	1639.0	*	2	22221392	0.
1	0156	59	0.	.0	1630.0	*	2	0010	726	0.	6.1	1639.0	*	2	22241393	0.
1	0158	60	0.	.0	1630.0	*	2	0012	727	0.	6.1	1639.0	*	2	22261394	0.
1	0200	61	0.	.0	1630.0	*	2	0014	728	0.	6.1	1639.0	*	2	22281395	0.
1	0202	62	0.	.0	1630.0	*	2	0016	729	0.	6.1	1639.0	*	2	22301396	0.
1	0204	63	0.	.0	1630.0	*	2	0018	730	0.	6.1	1639.0	*	2	22321397	0.
1	0206	64	0.	.0	1630.0	*	2	0020	731	0.	6.1	1639.0	*	2	22341398	0.
1	0208	65	0.	.0	1630.0	*	2	0022	732	0.	6.1	1639.0	*	2	22361399	0.
1	0210	66	0.	.0	1630.0	*	2	0024	733	0.	6.1	1639.0	*	2	22381400	0.
1	0212	67	0.	.0	1630.0	*	2	0026	734	0.	6.1	1639.0	*	2	22401401	0.
1	0214	68	0.	.0	1630.0	*	2	0028	735	0.	6.1	1639.0	*	2	22421402	0.
1	0216	69	0.	.0	1630.0	*	2	0030	736	0.	6.1	1639.0	*	2	22441403	0.
1	0218	70	0.	.0	1630.0	*	2	0032	737	0.	6.1	1639.0	*	2	22461404	0.
1	0220	71	0.	.0	1630.0	*	2	0034	738	0.	6.1	1639.0	*	2	22481405	0.
1	0222	72	0.	.0	1630.0	*	2	0036	739	0.	6.1	1639.0	*	2	22501406	0.
1	0224	73	0.	.0	1630.0	*	2	0038	740	0.	6.1	1639.0	*	2	22521407	0.
1	0226	74	0.	.0	1630.0	*	2	0040	741	0.	6.1	1639.0	*	2	22541408	0.
1	0228	75	0.	.0	1630.0	*	2	0042	742	0.	6.1	1639.0	*	2	22561409	0.
1	0230	76	0.	.0	1630.0	*	2	0044	743	0.	6.1	1639.0	*	2	22581410	0.
1	0232	77	0.	.0	1630.0	*	2	0046	744	0.	6.1	1639.0	*	2	23001411	0.
1	0234	78	0.	.0	1630.0	*	2	0048	745	0.	6.1	1639.0	*	2	23021412	0.
1	0236	79	0.	.0	1630.0	*	2	0050	746	0.	6.1	1639.0	*	2	23041413	0.
1	0238	80	0.	.0	1630.0	*	2	0052	747	0.	6.1	1639.0	*	2	23061414	0.
1	0240	81	0.	.0	1630.0	*	2	0054	748	0.	6.1	1639.0	*	2	23081415	0.
1	0242	82	0.	.0	1630.0	*	2	0056	749	0.	6.1	1639.0	*	2	23101416	0.
1	0244	83	0.	.0	1630.0	*	2	0058	750	0.	6.1	1639.0	*	2	23121417	0.
1	0246	84	0.	.0	1630.0	*	2	0100	751	0.	6.1	1639.0	*	2	23141418	0.
1	0248	85	0.	.0	1630.0	*	2	0102	752	0.	6.1	1639.0	*	2	23161419	0.
1	0250	86	0.	.0	1630.0	*	2	0104	753	0.	6.1	1639.0	*	2	23181420	0.
1	0252	87	0.	.0	1630.0	*	2	0106	754	0.	6.1	1639.0	*	2	23201421	0.
1	0254	88	0.	.0	1630.0	*	2	0108	755	0.	6.1	1639.0	*	2	23221422	0.

1	0256	89	0.	.0	1630.0	*	2	0110	756	0.	6.1	1639.0	*	2	23241423	0.
1	0258	90	0.	.0	1630.0	*	2	0112	757	0.	6.1	1639.0	*	2	23261424	0.
1	0300	91	0.	.0	1630.0	*	2	0114	758	0.	6.1	1639.0	*	2	23281425	0.
1	0302	92	0.	.0	1630.0	*	2	0116	759	0.	6.1	1639.0	*	2	23301426	0.
1	0304	93	0.	.0	1630.0	*	2	0118	760	0.	6.1	1639.0	*	2	23321427	0.
1	0306	94	0.	.0	1630.0	*	2	0120	761	0.	6.1	1639.0	*	2	23341428	0.
1	0308	95	0.	.0	1630.0	*	2	0122	762	0.	6.1	1639.0	*	2	23361429	0.
1	0310	96	0.	.0	1630.0	*	2	0124	763	0.	6.1	1639.0	*	2	23381430	0.
1	0312	97	0.	.0	1630.0	*	2	0126	764	0.	6.1	1639.0	*	2	23401431	0.
1	0314	98	0.	.0	1630.0	*	2	0128	765	0.	6.1	1639.0	*	2	23421432	0.
1	0316	99	0.	.0	1630.0	*	2	0130	766	0.	6.1	1639.0	*	2	23441433	0.
1	0318	100	0.	.0	1630.0	*	2	0132	767	0.	6.1	1639.0	*	2	23461434	0.
1	0320	101	0.	.0	1630.0	*	2	0134	768	0.	6.1	1639.0	*	2	23481435	0.
1	0322	102	0.	.0	1630.0	*	2	0136	769	0.	6.1	1639.0	*	2	23501436	0.
1	0324	103	0.	.0	1630.0	*	2	0138	770	0.	6.1	1639.0	*	2	23521437	0.
1	0326	104	0.	.0	1630.0	*	2	0140	771	0.	6.1	1639.0	*	2	23541438	0.
1	0328	105	0.	.0	1630.0	*	2	0142	772	0.	6.1	1639.0	*	2	23561439	0.
1	0330	106	0.	.0	1630.0	*	2	0144	773	0.	6.1	1639.0	*	2	23581440	0.
1	0332	107	0.	.0	1630.0	*	2	0146	774	0.	6.1	1639.0	*	3	00001441	0.
1	0334	108	0.	.0	1630.0	*	2	0148	775	0.	6.1	1639.0	*	3	00021442	0.
1	0336	109	0.	.0	1630.0	*	2	0150	776	0.	6.1	1639.0	*	3	00041443	0.
1	0338	110	0.	.0	1630.0	*	2	0152	777	0.	6.1	1639.0	*	3	00061444	0.
1	0340	111	0.	.0	1630.0	*	2	0154	778	0.	6.1	1639.0	*	3	00081445	0.
1	0342	112	0.	.0	1630.0	*	2	0156	779	0.	6.1	1639.0	*	3	00101446	0.
1	0344	113	0.	.0	1630.0	*	2	0158	780	0.	6.1	1639.0	*	3	00121447	0.
1	0346	114	0.	.0	1630.0	*	2	0200	781	0.	6.1	1639.0	*	3	00141448	0.
1	0348	115	0.	.0	1630.0	*	2	0202	782	0.	6.1	1639.0	*	3	00161449	0.
1	0350	116	0.	.0	1630.0	*	2	0204	783	0.	6.1	1639.0	*	3	00181450	0.
1	0352	117	0.	.0	1630.0	*	2	0206	784	0.	6.1	1639.0	*	3	00201451	0.
1	0354	118	0.	.0	1630.0	*	2	0208	785	0.	6.1	1639.0	*	3	00221452	0.
1	0356	119	0.	.0	1630.0	*	2	0210	786	0.	6.1	1639.0	*	3	00241453	0.
1	0358	120	0.	.0	1630.0	*	2	0212	787	0.	6.1	1639.0	*	3	00261454	0.
1	0400	121	0.	.0	1630.0	*	2	0214	788	0.	6.1	1639.0	*	3	00281455	0.
1	0402	122	0.	.0	1630.0	*	2	0216	789	0.	6.1	1639.0	*	3	00301456	0.
1	0404	123	0.	.0	1630.0	*	2	0218	790	0.	6.1	1639.0	*	3	00321457	0.
1	0406	124	0.	.0	1630.0	*	2	0220	791	0.	6.1	1639.0	*	3	00341458	0.
1	0408	125	0.	.0	1630.0	*	2	0222	792	0.	6.1	1639.0	*	3	00361459	0.
1	0410	126	0.	.0	1630.0	*	2	0224	793	0.	6.1	1639.0	*	3	00381460	0.
1	0412	127	0.	.0	1630.0	*	2	0226	794	0.	6.1	1639.0	*	3	00401461	0.
1	0414	128	0.	.0	1630.0	*	2	0228	795	0.	6.1	1639.0	*	3	00421462	0.
1	0416	129	0.	.0	1630.0	*	2	0230	796	0.	6.1	1639.0	*	3	00441463	0.
1	0418	130	0.	.0	1630.0	*	2	0232	797	0.	6.1	1639.0	*	3	00461464	0.
1	0420	131	0.	.0	1630.0	*	2	0234	798	0.	6.1	1639.0	*	3	00481465	0.
1	0422	132	0.	.0	1630.0	*	2	0236	799	0.	6.1	1639.0	*	3	00501466	0.
1	0424	133	0.	.0	1630.0	*	2	0238	800	0.	6.1	1639.0	*	3	00521467	0.
1	0426	134	0.	.0	1630.0	*	2	0240	801	0.	6.1	1639.0	*	3	00541468	0.
1	0428	135	0.	.0	1630.0	*	2	0242	802	0.	6.1	1639.0	*	3	00561469	0.
1	0430	136	0.	.0	1630.0	*	2	0244	803	0.	6.1	1639.0	*	3	00581470	0.
1	0432	137	0.	.0	1630.0	*	2	0246	804	0.	6.1	1639.0	*	3	01001471	0.
1	0434	138	0.	.0	1630.0	*	2	0248	805	0.	6.1	1639.0	*	3	01021472	0.
1	0436	139	0.	.0	1630.0	*	2	0250	806	0.	6.1	1639.0	*	3	01041473	0.
1	0438	140	0.	.0	1630.0	*	2	0252	807	0.	6.1	1639.0	*	3	01061474	0.
1	0440	141	0.	.0	1630.0	*	2	0254	808	0.	6.1	1639.0	*	3	01081475	0.
1	0442	142	0.	.0	1630.0	*	2	0256	809	0.	6.1	1639.0	*	3	01101476	0.
1	0444	143	0.	.0	1630.0	*	2	0258	810	0.	6.1	1639.0	*	3	01121477	0.
1	0446	144	0.	.0	1630.0	*	2	0300	811	0.	6.1	1639.0	*	3	01141478	0.
1	0448	145	0.	.0	1630.0	*	2	0302	812	0.	6.1	1639.0	*	3	01161479	0.
1	0450	146	0.	.0	1630.0	*	2	0304	813	0.	6.1	1639.0	*	3	01181480	0.
1	0452	147	0.	.0	1630.0	*	2	0306	814	0.	6.1	1639.0	*	3	01201481	0.
1	0454	148	0.	.0	1630.0	*	2	0308	815	0.	6.1	1639.0	*	3	01221482	0.
1	0456	149	0.	.0	1630.0	*	2	0310	816	0.	6.1	1639.0	*	3	01241483	0.
1	0458	150	0.	.0	1630.0	*	2	0312	817	0.	6.1	1639.0	*	3	01261484	0.
1	0500	151	0.	.0	1630.0	*	2	0314	818	0.	6.1	1639.0	*	3	01281485	0.
1	0502	152	0.	.0	1630.0	*	2	0316	819	0.	6.1	1639.0	*	3	01301486	0.
1	0504	153	0.	.0	1630.0	*	2	0318	820	0.	6.1	1639.0	*	3	01321487	0.
1	0506	154	0.	.0	1630.0	*	2	0320	821	0.	6.1	1639.0	*	3	01341488	0.
1	0508	155	0.	.0	1630.0	*	2	0322	822	0.	6.1	1639.0	*	3	01361489	0.
1	0510	156	0.	.0	1630.0	*	2	0324	823	0.	6.1	1639.0	*	3	01381490	0.
1	0512	157	0.	.0	1630.0	*	2	0326	824	0.	6.1	1639.0	*	3	01401491	0.
1	0514	158	0.	.0	1630.0	*	2	0328	825	0.	6.1	1639.0	*	3	01421492	0.
1	0516	159	0.	.0	1630.0	*	2	0330	826	0.	6.1	1639.0	*	3	01441493	0.
1	0518	160	0.	.0	1630.0	*	2	0332	827	0.	6.1	1639.0	*	3	01461494	0.
1	0520	161	0.	.0	1630.0	*	2	0334	828	0.	6.1	1639.0	*	3	01481495	0.
1	0522	162	0.	.0	1630.0	*	2	0336	829	0.	6.1	1639.0	*	3	01501496	0.
1	0524	163	0.	.0	1630.0	*	2	0338	830	0.	6.1	1639.0	*	3	01521497	0.
1	0526	164	0.	.0	1630.0	*	2	0340	831	0.	6.1	1639.0	*	3	01541498	0.
1	0528	165	0.	.0	1630.0	*	2	0342	832	0.	6.1	1639.0	*	3	01561499	0.
1	0530	166	0.	.0	1630.0	*	2	0344	833	0.	6.1	1639.0	*	3	01581500	0.
1	0532	167	0.	.0	1630.0	*	2	0346	834	0.	6.1	1639.0	*	3	02001501	0.
1	0534	168	0.	.0	1630.0	*	2	0348	835	0.	6.1	1639.0	*	3	02021502	0.
1	0536	169	0.	.0	1630.0	*	2	0350	836	0.	6.1	1639.0	*	3	02041503	0.
1	0538	170	0.	.0	1630.0	*	2	0352	837	0.	6.1	1639.0	*	3	02061504	0.
1	0540	171	0.	.0	1630.0	*	2	0354	838	0.	6.1	1639.0	*	3	02081505	0.
1	0542	172	0.	.0	1630.0	*	2	0356	839	0.	6.1	1639.0	*	3	02101506	0.

1	0544	173	0.	.0	1630.0	*	2	0358	840	0.	6.1	1639.0	*	3	02121507	0.
1	0546	174	0.	.0	1630.0	*	2	0400	841	0.	6.1	1639.0	*	3	02141508	0.
1	0548	175	0.	.0	1630.0	*	2	0402	842	0.	6.1	1639.0	*	3	02161509	0.
1	0550	176	0.	.0	1630.0	*	2	0404	843	0.	6.1	1639.0	*	3	02181510	0.
1	0552	177	0.	.0	1630.0	*	2	0406	844	0.	6.1	1639.0	*	3	02201511	0.
1	0554	178	0.	.0	1630.0	*	2	0408	845	0.	6.1	1639.0	*	3	02221512	0.
1	0556	179	0.	.0	1630.0	*	2	0410	846	0.	6.1	1639.0	*	3	02241513	0.
1	0558	180	0.	.0	1630.0	*	2	0412	847	0.	6.1	1639.0	*	3	02261514	0.
1	0600	181	0.	.0	1630.0	*	2	0414	848	0.	6.1	1639.0	*	3	02281515	0.
1	0602	182	0.	.0	1630.0	*	2	0416	849	0.	6.1	1639.0	*	3	02301516	0.
1	0604	183	0.	.0	1630.0	*	2	0418	850	0.	6.1	1639.0	*	3	02321517	0.
1	0606	184	0.	.0	1630.0	*	2	0420	851	0.	6.1	1639.0	*	3	02341518	0.
1	0608	185	0.	.0	1630.0	*	2	0422	852	0.	6.1	1639.0	*	3	02361519	0.
1	0610	186	0.	.0	1630.0	*	2	0424	853	0.	6.1	1639.0	*	3	02381520	0.
1	0612	187	0.	.0	1630.0	*	2	0426	854	0.	6.1	1639.0	*	3	02401521	0.
1	0614	188	0.	.0	1630.0	*	2	0428	855	0.	6.1	1639.0	*	3	02421522	0.
1	0616	189	0.	.0	1630.0	*	2	0430	856	0.	6.1	1639.0	*	3	02441523	0.
1	0618	190	0.	.0	1630.0	*	2	0432	857	0.	6.1	1639.0	*	3	02461524	0.
1	0620	191	0.	.0	1630.0	*	2	0434	858	0.	6.1	1639.0	*	3	02481525	0.
1	0622	192	0.	.0	1630.0	*	2	0436	859	0.	6.1	1639.0	*	3	02501526	0.
1	0624	193	0.	.0	1630.0	*	2	0438	860	0.	6.1	1639.0	*	3	02521527	0.
1	0626	194	0.	.0	1630.0	*	2	0440	861	0.	6.1	1639.0	*	3	02541528	0.
1	0628	195	0.	.0	1630.0	*	2	0442	862	0.	6.1	1639.0	*	3	02561529	0.
1	0630	196	0.	.0	1630.0	*	2	0444	863	0.	6.1	1639.0	*	3	02581530	0.
1	0632	197	0.	.0	1630.0	*	2	0446	864	0.	6.1	1639.0	*	3	03001531	0.
1	0634	198	0.	.0	1630.0	*	2	0448	865	0.	6.1	1639.0	*	3	03021532	0.
1	0636	199	0.	.0	1630.0	*	2	0450	866	0.	6.1	1639.0	*	3	03041533	0.
1	0638	200	0.	.0	1630.0	*	2	0452	867	0.	6.1	1639.0	*	3	03061534	0.
1	0640	201	0.	.0	1630.0	*	2	0454	868	0.	6.1	1639.0	*	3	03081535	0.
1	0642	202	0.	.0	1630.0	*	2	0456	869	0.	6.1	1639.0	*	3	03101536	0.
1	0644	203	0.	.0	1630.0	*	2	0458	870	0.	6.1	1639.0	*	3	03121537	0.
1	0646	204	0.	.0	1630.0	*	2	0500	871	0.	6.1	1639.0	*	3	03141538	0.
1	0648	205	0.	.0	1630.0	*	2	0502	872	0.	6.1	1639.0	*	3	03161539	0.
1	0650	206	0.	.0	1630.0	*	2	0504	873	0.	6.1	1639.0	*	3	03181540	0.
1	0652	207	0.	.0	1630.0	*	2	0506	874	0.	6.1	1639.0	*	3	03201541	0.
1	0654	208	0.	.0	1630.0	*	2	0508	875	0.	6.1	1639.0	*	3	03221542	0.
1	0656	209	0.	.0	1630.0	*	2	0510	876	0.	6.1	1639.0	*	3	03241543	0.
1	0658	210	0.	.0	1630.0	*	2	0512	877	0.	6.1	1639.0	*	3	03261544	0.
1	0700	211	0.	.0	1630.0	*	2	0514	878	0.	6.1	1639.0	*	3	03281545	0.
1	0702	212	0.	.0	1630.0	*	2	0516	879	0.	6.1	1639.0	*	3	03301546	0.
1	0704	213	0.	.0	1630.0	*	2	0518	880	0.	6.1	1639.0	*	3	03321547	0.
1	0706	214	0.	.0	1630.0	*	2	0520	881	0.	6.1	1639.0	*	3	03341548	0.
1	0708	215	0.	.0	1630.0	*	2	0522	882	0.	6.1	1639.0	*	3	03361549	0.
1	0710	216	0.	.0	1630.0	*	2	0524	883	0.	6.1	1639.0	*	3	03381550	0.
1	0712	217	0.	.0	1630.0	*	2	0526	884	0.	6.1	1639.0	*	3	03401551	0.
1	0714	218	0.	.0	1630.0	*	2	0528	885	0.	6.1	1639.0	*	3	03421552	0.
1	0716	219	0.	.0	1630.0	*	2	0530	886	0.	6.1	1639.0	*	3	03441553	0.
1	0718	220	0.	.0	1630.0	*	2	0532	887	0.	6.1	1639.0	*	3	03461554	0.
1	0720	221	0.	.0	1630.0	*	2	0534	888	0.	6.1	1639.0	*	3	03481555	0.
1	0722	222	0.	.0	1630.0	*	2	0536	889	0.	6.1	1639.0	*	3	03501556	0.
1	0724	223	0.	.0	1630.0	*	2	0538	890	0.	6.1	1639.0	*	3	03521557	0.
1	0726	224	0.	.0	1630.0	*	2	0540	891	0.	6.1	1639.0	*	3	03541558	0.
1	0728	225	0.	.0	1630.0	*	2	0542	892	0.	6.1	1639.0	*	3	03561559	0.
1	0730	226	0.	.0	1630.0	*	2	0544	893	0.	6.1	1639.0	*	3	03581560	0.
1	0732	227	0.	.0	1630.0	*	2	0546	894	0.	6.1	1639.0	*	3	04001561	0.
1	0734	228	0.	.0	1630.0	*	2	0548	895	0.	6.1	1639.0	*	3	04021562	0.
1	0736	229	0.	.0	1630.0	*	2	0550	896	0.	6.1	1639.0	*	3	04041563	0.
1	0738	230	0.	.0	1630.0	*	2	0552	897	0.	6.1	1639.0	*	3	04061564	0.
1	0740	231	0.	.0	1630.0	*	2	0554	898	0.	6.1	1639.0	*	3	04081565	0.
1	0742	232	0.	.0	1630.0	*	2	0556	899	0.	6.1	1639.0	*	3	04101566	0.
1	0744	233	0.	.0	1630.0	*	2	0558	900	0.	6.1	1639.0	*	3	04121567	0.
1	0746	234	0.	.0	1630.0	*	2	0600	901	0.	6.1	1639.0	*	3	04141568	0.
1	0748	235	0.	.0	1630.0	*	2	0602	902	0.	6.1	1639.0	*	3	04161569	0.
1	0750	236	0.	.0	1630.0	*	2	0604	903	0.	6.1	1639.0	*	3	04181570	0.
1	0752	237	0.	.0	1630.0	*	2	0606	904	0.	6.1	1639.0	*	3	04201571	0.
1	0754	238	0.	.0	1630.0	*	2	0608	905	0.	6.1	1639.0	*	3	04221572	0.
1	0756	239	0.	.0	1630.0	*	2	0610	906	0.	6.1	1639.0	*	3	04241573	0.
1	0758	240	0.	.0	1630.0	*	2	0612	907	0.	6.1	1639.0	*	3	04261574	0.
1	0800	241	0.	.0	1630.0	*	2	0614	908	0.	6.1	1639.0	*	3	04281575	0.
1	0802	242	0.	.0	1630.0	*	2	0616	909	0.	6.1	1639.0	*	3	04301576	0.
1	0804	243	0.	.0	1630.0	*	2	0618	910	0.	6.1	1639.0	*	3	04321577	0.
1	0806	244	0.	.0	1630.0	*	2	0620	911	0.	6.1	1639.0	*	3	04341578	0.
1	0808	245	0.	.0	1630.0	*	2	0622	912	0.	6.1	1639.0	*	3	04361579	0.
1	0810	246	0.	.0	1630.0	*	2	0624	913	0.	6.1	1639.0	*	3	04381580	0.
1	0812	247	0.	.0	1630.0	*	2	0626	914	0.	6.1	1639.0	*	3	04401581	0.
1	0814	248	0.	.0	1630.0	*	2	0628	915	0.	6.1	1639.0	*	3	04421582	0.
1	0816	249	0.	.0	1630.0	*	2	0630	916	0.	6.1	1639.0	*	3	04441583	0.
1	0818	250	0.	.0	1630.0	*	2	0632	917	0.	6.1	1639.0	*	3	04461584	0.
1	0820	251	0.	.0	1630.0	*	2	0634	918	0.	6.1	1639.0	*	3	04481585	0.
1	0822	252	0.	.0	1630.0	*	2	0636	919	0.	6.1	1639.0	*	3	04501586	0.
1	0824	253	0.	.0	1630.0	*	2	0638	920	0.	6.1	1639.0	*	3	04521587	0.
1	0826	254	0.	.0	1630.0	*	2	0640	921	0.	6.1	1639.0	*	3	04541588	0.
1	0828	255	0.	.0	1630.0	*	2	0642	922	0.	6.1	1639.0	*	3	04561589	0.
1	0830	256	0.	.0	1630.0	*	2	0644	923	0.	6.1	1639.0	*	3	04581590	0.

1	0832	257	0.	.0	1630.0	*	2	0646	924	0.	6.1	1639.0	*	3	05001591	0.
1	0834	258	0.	.0	1630.0	*	2	0648	925	0.	6.1	1639.0	*	3	05021592	0.
1	0836	259	0.	.0	1630.0	*	2	0650	926	0.	6.1	1639.0	*	3	05041593	0.
1	0838	260	0.	.0	1630.0	*	2	0652	927	0.	6.1	1639.0	*	3	05061594	0.
1	0840	261	0.	.0	1630.0	*	2	0654	928	0.	6.1	1639.0	*	3	05081595	0.
1	0842	262	0.	.0	1630.0	*	2	0656	929	0.	6.1	1639.0	*	3	05101596	0.
1	0844	263	0.	.0	1630.0	*	2	0658	930	0.	6.1	1639.0	*	3	05121597	0.
1	0846	264	0.	.0	1630.0	*	2	0700	931	0.	6.1	1639.0	*	3	05141598	0.
1	0848	265	0.	.0	1630.0	*	2	0702	932	0.	6.1	1639.0	*	3	05161599	0.
1	0850	266	0.	.0	1630.0	*	2	0704	933	0.	6.1	1639.0	*	3	05181600	0.
1	0852	267	0.	.0	1630.0	*	2	0706	934	0.	6.1	1639.0	*	3	05201601	0.
1	0854	268	0.	.0	1630.0	*	2	0708	935	0.	6.1	1639.0	*	3	05221602	0.
1	0856	269	0.	.0	1630.0	*	2	0710	936	0.	6.1	1639.0	*	3	05241603	0.
1	0858	270	0.	.0	1630.0	*	2	0712	937	0.	6.1	1639.0	*	3	05261604	0.
1	0900	271	0.	.0	1630.0	*	2	0714	938	0.	6.1	1639.0	*	3	05281605	0.
1	0902	272	0.	.0	1630.0	*	2	0716	939	0.	6.1	1639.0	*	3	05301606	0.
1	0904	273	0.	.0	1630.0	*	2	0718	940	0.	6.1	1639.0	*	3	05321607	0.
1	0906	274	0.	.0	1630.0	*	2	0720	941	0.	6.1	1639.0	*	3	05341608	0.
1	0908	275	0.	.0	1630.0	*	2	0722	942	0.	6.1	1639.0	*	3	05361609	0.
1	0910	276	0.	.0	1630.0	*	2	0724	943	0.	6.1	1639.0	*	3	05381610	0.
1	0912	277	0.	.0	1630.0	*	2	0726	944	0.	6.1	1639.0	*	3	05401611	0.
1	0914	278	0.	.0	1630.0	*	2	0728	945	0.	6.1	1639.0	*	3	05421612	0.
1	0916	279	0.	.0	1630.0	*	2	0730	946	0.	6.1	1639.0	*	3	05441613	0.
1	0918	280	0.	.0	1630.0	*	2	0732	947	0.	6.1	1639.0	*	3	05461614	0.
1	0920	281	0.	.0	1630.0	*	2	0734	948	0.	6.1	1639.0	*	3	05481615	0.
1	0922	282	0.	.0	1630.0	*	2	0736	949	0.	6.1	1639.0	*	3	05501616	0.
1	0924	283	0.	.0	1630.0	*	2	0738	950	0.	6.1	1639.0	*	3	05521617	0.
1	0926	284	0.	.0	1630.0	*	2	0740	951	0.	6.1	1639.0	*	3	05541618	0.
1	0928	285	0.	.0	1630.0	*	2	0742	952	0.	6.1	1639.0	*	3	05561619	0.
1	0930	286	0.	.0	1630.0	*	2	0744	953	0.	6.1	1639.0	*	3	05581620	0.
1	0932	287	0.	.0	1630.0	*	2	0746	954	0.	6.1	1639.0	*	3	06001621	0.
1	0934	288	0.	.0	1630.0	*	2	0748	955	0.	6.1	1639.0	*	3	06021622	0.
1	0936	289	0.	.0	1630.0	*	2	0750	956	0.	6.1	1639.0	*	3	06041623	0.
1	0938	290	0.	.0	1630.0	*	2	0752	957	0.	6.1	1639.0	*	3	06061624	0.
1	0940	291	0.	.0	1630.0	*	2	0754	958	0.	6.1	1639.0	*	3	06081625	0.
1	0942	292	0.	.0	1630.0	*	2	0756	959	0.	6.1	1639.0	*	3	06101626	0.
1	0944	293	0.	.0	1630.0	*	2	0758	960	0.	6.1	1639.0	*	3	06121627	0.
1	0946	294	0.	.0	1630.0	*	2	0800	961	0.	6.1	1639.0	*	3	06141628	0.
1	0948	295	0.	.0	1630.0	*	2	0802	962	0.	6.1	1639.0	*	3	06161629	0.
1	0950	296	0.	.0	1630.0	*	2	0804	963	0.	6.1	1639.0	*	3	06181630	0.
1	0952	297	0.	.0	1630.0	*	2	0806	964	0.	6.1	1639.0	*	3	06201631	0.
1	0954	298	0.	.0	1630.0	*	2	0808	965	0.	6.1	1639.0	*	3	06221632	0.
1	0956	299	0.	.0	1630.0	*	2	0810	966	0.	6.1	1639.0	*	3	06241633	0.
1	0958	300	0.	.0	1630.0	*	2	0812	967	0.	6.1	1639.0	*	3	06261634	0.
1	1000	301	0.	.0	1630.0	*	2	0814	968	0.	6.1	1639.0	*	3	06281635	0.
1	1002	302	0.	.0	1630.0	*	2	0816	969	0.	6.1	1639.0	*	3	06301636	0.
1	1004	303	0.	.0	1630.0	*	2	0818	970	0.	6.1	1639.0	*	3	06321637	0.
1	1006	304	0.	.0	1630.0	*	2	0820	971	0.	6.1	1639.0	*	3	06341638	0.
1	1008	305	0.	.0	1630.0	*	2	0822	972	0.	6.1	1639.0	*	3	06361639	0.
1	1010	306	0.	.0	1630.0	*	2	0824	973	0.	6.1	1639.0	*	3	06381640	0.
1	1012	307	0.	.0	1630.0	*	2	0826	974	0.	6.1	1639.0	*	3	06401641	0.
1	1014	308	0.	.0	1630.0	*	2	0828	975	0.	6.1	1639.0	*	3	06421642	0.
1	1016	309	0.	.0	1630.0	*	2	0830	976	0.	6.1	1639.0	*	3	06441643	0.
1	1018	310	0.	.0	1630.0	*	2	0832	977	0.	6.1	1639.0	*	3	06461644	0.
1	1020	311	0.	.0	1630.0	*	2	0834	978	0.	6.1	1639.0	*	3	06481645	0.
1	1022	312	0.	.0	1630.0	*	2	0836	979	0.	6.1	1639.0	*	3	06501646	0.
1	1024	313	0.	.0	1630.0	*	2	0838	980	0.	6.1	1639.0	*	3	06521647	0.
1	1026	314	0.	.0	1630.0	*	2	0840	981	0.	6.1	1639.0	*	3	06541648	0.
1	1028	315	0.	.0	1630.0	*	2	0842	982	0.	6.1	1639.0	*	3	06561649	0.
1	1030	316	0.	.0	1630.0	*	2	0844	983	0.	6.1	1639.0	*	3	06581650	0.
1	1032	317	0.	.0	1630.0	*	2	0846	984	0.	6.1	1639.0	*	3	07001651	0.
1	1034	318	0.	.0	1630.0	*	2	0848	985	0.	6.1	1639.0	*	3	07021652	0.
1	1036	319	0.	.0	1630.0	*	2	0850	986	0.	6.1	1639.0	*	3	07041653	0.
1	1038	320	0.	.0	1630.0	*	2	0852	987	0.	6.1	1639.0	*	3	07061654	0.
1	1040	321	0.	.0	1630.0	*	2	0854	988	0.	6.1	1639.0	*	3	07081655	0.
1	1042	322	0.	.0	1630.0	*	2	0856	989	0.	6.1	1639.0	*	3	07101656	0.
1	1044	323	0.	.0	1630.0	*	2	0858	990	0.	6.1	1639.0	*	3	07121657	0.
1	1046	324	0.	.0	1630.0	*	2	0900	991	0.	6.1	1639.0	*	3	07141658	0.
1	1048	325	0.	.0	1630.0	*	2	0902	992	0.	6.1	1639.0	*	3	07161659	0.
1	1050	326	0.	.0	1630.0	*	2	0904	993	0.	6.1	1639.0	*	3	07181660	0.
1	1052	327	0.	.0	1630.0	*	2	0906	994	0.	6.1	1639.0	*	3	07201661	0.
1	1054	328	0.	.0	1630.0	*	2	0908	995	0.	6.1	1639.0	*	3	07221662	0.
1	1056	329	0.	.0	1630.0	*	2	0910	996	0.	6.1	1639.0	*	3	07241663	0.
1	1058	330	0.	.0	1630.0	*	2	0912	997	0.	6.1	1639.0	*	3	07261664	0.
1	1100	331	0.	.0	1630.0	*	2	0914	998	0.	6.1	1639.0	*	3	07281665	0.
1	1102	332	0.	.0	1630.0	*	2	0916	999	0.	6.1	1639.0	*	3	07301666	0.
1	1104	333	0.	.0	1630.0	*	2	09181000		0.	6.1	1639.0	*	3	07321667	0.
1	1106	334	0.	.0	1630.0	*	2	09201001		0.	6.1	1639.0	*	3	07341668	0.
1	1108	335	0.	.0	1630.0	*	2	09221002		0.	6.1	1639.0	*	3	07361669	0.
1	1110	336	0.	.0	1630.0	*	2	09241003		0.	6.1	1639.0	*	3	07381670	0.
1	1112	337	0.	.0	1630.0	*	2	09261004		0.	6.1	1639.0	*	3	07401671	0.
1	1114	338	0.	.0	1630.0	*	2	09281005		0.	6.1	1639.0	*	3	07421672	0.
1	1116	339	0.	.0	1630.0	*	2	09301006		0.	6.1	1639.0	*	3	07441673	0.
1	1118	340	0.	.0	1630.0	*	2	09321007		0.	6.1	1639.0	*	3	07461674	0.

1	1120	341	0.	.0	1630.0	*	2	09341008	0.	6.1	1639.0	*	3	07481675	0.
1	1122	342	0.	.0	1630.0	*	2	09361009	0.	6.1	1639.0	*	3	07501676	0.
1	1124	343	0.	.0	1630.0	*	2	09381010	0.	6.1	1639.0	*	3	07521677	0.
1	1126	344	0.	.0	1630.0	*	2	09401011	0.	6.1	1639.0	*	3	07541678	0.
1	1128	345	0.	.0	1630.0	*	2	09421012	0.	6.1	1639.0	*	3	07561679	0.
1	1130	346	0.	.0	1630.0	*	2	09441013	0.	6.1	1639.0	*	3	07581680	0.
1	1132	347	0.	.0	1630.0	*	2	09461014	0.	6.1	1639.0	*	3	08001681	0.
1	1134	348	0.	.0	1630.0	*	2	09481015	0.	6.1	1639.0	*	3	08021682	0.
1	1136	349	0.	.0	1630.0	*	2	09501016	0.	6.1	1639.0	*	3	08041683	0.
1	1138	350	0.	.0	1630.0	*	2	09521017	0.	6.1	1639.0	*	3	08061684	0.
1	1140	351	0.	.0	1630.0	*	2	09541018	0.	6.1	1639.0	*	3	08081685	0.
1	1142	352	0.	.0	1630.0	*	2	09561019	0.	6.1	1639.0	*	3	08101686	0.
1	1144	353	0.	.0	1630.0	*	2	09581020	0.	6.1	1639.0	*	3	08121687	0.
1	1146	354	0.	.0	1630.0	*	2	10001021	0.	6.1	1639.0	*	3	08141688	0.
1	1148	355	0.	.0	1630.0	*	2	10021022	0.	6.1	1639.0	*	3	08161689	0.
1	1150	356	0.	.0	1630.0	*	2	10041023	0.	6.1	1639.0	*	3	08181690	0.
1	1152	357	0.	.0	1630.0	*	2	10061024	0.	6.1	1639.0	*	3	08201691	0.
1	1154	358	0.	.1	1630.3	*	2	10081025	0.	6.1	1639.0	*	3	08221692	0.
1	1156	359	0.	.2	1631.1	*	2	10101026	0.	6.1	1639.0	*	3	08241693	0.
1	1158	360	0.	.4	1631.8	*	2	10121027	0.	6.1	1639.0	*	3	08261694	0.
1	1200	361	0.	.8	1632.7	*	2	10141028	0.	6.1	1639.0	*	3	08281695	0.
1	1202	362	0.	1.2	1633.6	*	2	10161029	0.	6.1	1639.0	*	3	08301696	0.
1	1204	363	0.	1.8	1634.4	*	2	10181030	0.	6.1	1639.0	*	3	08321697	0.
1	1206	364	0.	2.3	1635.3	*	2	10201031	0.	6.1	1639.0	*	3	08341698	0.
1	1208	365	0.	2.9	1636.0	*	2	10221032	0.	6.1	1639.0	*	3	08361699	0.
1	1210	366	0.	3.6	1636.7	*	2	10241033	0.	6.1	1639.0	*	3	08381700	0.
1	1212	367	0.	4.2	1637.4	*	2	10261034	0.	6.1	1639.0	*	3	08401701	0.
1	1214	368	0.	4.9	1638.0	*	2	10281035	0.	6.1	1639.0	*	3	08421702	0.
1	1216	369	0.	5.6	1638.6	*	2	10301036	0.	6.1	1639.0	*	3	08441703	0.
1	1218	370	1.	6.2	1639.0	*	2	10321037	0.	6.1	1639.0	*	3	08461704	0.
1	1220	371	11.	6.7	1639.4	*	2	10341038	0.	6.1	1639.0	*	3	08481705	0.
1	1222	372	20.	7.2	1639.8	*	2	10361039	0.	6.1	1639.0	*	3	08501706	0.
1	1224	373	38.	7.6	1640.1	*	2	10381040	0.	6.1	1639.0	*	3	08521707	0.
1	1226	374	74.	7.9	1640.2	*	2	10401041	0.	6.1	1639.0	*	3	08541708	0.
1	1228	375	94.	8.0	1640.3	*	2	10421042	0.	6.1	1639.0	*	3	08561709	0.
1	1230	376	104.	8.1	1640.4	*	2	10441043	0.	6.1	1639.0	*	3	08581710	0.
1	1232	377	103.	8.1	1640.4	*	2	10461044	0.	6.1	1639.0	*	3	09001711	0.
1	1234	378	92.	8.0	1640.3	*	2	10481045	0.	6.1	1639.0	*	3	09021712	0.
1	1236	379	73.	7.9	1640.2	*	2	10501046	0.	6.1	1639.0	*	3	09041713	0.
1	1238	380	55.	7.7	1640.1	*	2	10521047	0.	6.1	1639.0	*	3	09061714	0.
1	1240	381	42.	7.6	1640.1	*	2	10541048	0.	6.1	1639.0	*	3	09081715	0.
1	1242	382	31.	7.5	1640.0	*	2	10561049	0.	6.1	1639.0	*	3	09101716	0.
1	1244	383	25.	7.5	1640.0	*	2	10581050	0.	6.1	1639.0	*	3	09121717	0.
1	1246	384	24.	7.4	1639.9	*	2	11001051	0.	6.1	1639.0	*	3	09141718	0.
1	1248	385	22.	7.3	1639.9	*	2	11021052	0.	6.1	1639.0	*	3	09161719	0.
1	1250	386	21.	7.3	1639.9	*	2	11041053	0.	6.1	1639.0	*	3	09181720	0.
1	1252	387	20.	7.2	1639.8	*	2	11061054	0.	6.1	1639.0	*	3	09201721	0.
1	1254	388	19.	7.2	1639.8	*	2	11081055	0.	6.1	1639.0	*	3	09221722	0.
1	1256	389	18.	7.1	1639.7	*	2	11101056	0.	6.1	1639.0	*	3	09241723	0.
1	1258	390	17.	7.1	1639.7	*	2	11121057	0.	6.1	1639.0	*	3	09261724	0.
1	1300	391	17.	7.0	1639.7	*	2	11141058	0.	6.1	1639.0	*	3	09281725	0.
1	1302	392	16.	7.0	1639.6	*	2	11161059	0.	6.1	1639.0	*	3	09301726	0.
1	1304	393	15.	6.9	1639.6	*	2	11181060	0.	6.1	1639.0	*	3	09321727	0.
1	1306	394	14.	6.9	1639.6	*	2	11201061	0.	6.1	1639.0	*	3	09341728	0.
1	1308	395	14.	6.9	1639.5	*	2	11221062	0.	6.1	1639.0	*	3	09361729	0.
1	1310	396	13.	6.8	1639.5	*	2	11241063	0.	6.1	1639.0	*	3	09381730	0.
1	1312	397	12.	6.8	1639.5	*	2	11261064	0.	6.1	1639.0	*	3	09401731	0.
1	1314	398	12.	6.8	1639.5	*	2	11281065	0.	6.1	1639.0	*	3	09421732	0.
1	1316	399	11.	6.7	1639.4	*	2	11301066	0.	6.1	1639.0	*	3	09441733	0.
1	1318	400	11.	6.7	1639.4	*	2	11321067	0.	6.1	1639.0	*	3	09461734	0.
1	1320	401	10.	6.7	1639.4	*	2	11341068	0.	6.1	1639.0	*	3	09481735	0.
1	1322	402	10.	6.6	1639.4	*	2	11361069	0.	6.1	1639.0	*	3	09501736	0.
1	1324	403	9.	6.6	1639.4	*	2	11381070	0.	6.1	1639.0	*	3	09521737	0.
1	1326	404	9.	6.6	1639.3	*	2	11401071	0.	6.1	1639.0	*	3	09541738	0.
1	1328	405	8.	6.6	1639.3	*	2	11421072	0.	6.1	1639.0	*	3	09561739	0.
1	1330	406	8.	6.5	1639.3	*	2	11441073	0.	6.1	1639.0	*	3	09581740	0.
1	1332	407	8.	6.5	1639.3	*	2	11461074	0.	6.1	1639.0	*	3	10001741	0.
1	1334	408	7.	6.5	1639.3	*	2	11481075	0.	6.1	1639.0	*	3	10021742	0.
1	1336	409	7.	6.5	1639.3	*	2	11501076	0.	6.1	1639.0	*	3	10041743	0.
1	1338	410	6.	6.5	1639.3	*	2	11521077	0.	6.1	1639.0	*	3	10061744	0.
1	1340	411	6.	6.4	1639.2	*	2	11541078	0.	6.1	1639.0	*	3	10081745	0.
1	1342	412	6.	6.4	1639.2	*	2	11561079	0.	6.1	1639.0	*	3	10101746	0.
1	1344	413	6.	6.4	1639.2	*	2	11581080	0.	6.1	1639.0	*	3	10121747	0.
1	1346	414	5.	6.4	1639.2	*	2	12001081	0.	6.1	1639.0	*	3	10141748	0.
1	1348	415	5.	6.4	1639.2	*	2	12021082	0.	6.1	1639.0	*	3	10161749	0.
1	1350	416	5.	6.4	1639.2	*	2	12041083	0.	6.1	1639.0	*	3	10181750	0.
1	1352	417	5.	6.4	1639.2	*	2	12061084	0.	6.1	1639.0	*	3	10201751	0.
1	1354	418	4.	6.3	1639.2	*	2	12081085	0.	6.1	1639.0	*	3	10221752	0.
1	1356	419	4.	6.3	1639.2	*	2	12101086	0.	6.1	1639.0	*	3	10241753	0.
1	1358	420	4.	6.3	1639.2	*	2	12121087	0.	6.1	1639.0	*	3	10261754	0.
1	1400	421	4.	6.3	1639.2	*	2	12141088	0.	6.1	1639.0	*	3	10281755	0.
1	1402	422	4.	6.3	1639.1	*	2	12161089	0.	6.1	1639.0	*	3	10301756	0.
1	1404	423	3.	6.3	1639.1	*	2	12181090	0.	6.1	1639.0	*	3	10321757	0.
1	1406	424	3.	6.3	1639.1	*	2	12201091	0.	6.1	1639.0	*	3	10341758	0.

1	1408	425	3.	6.3	1639.1	*	2	12221092	0.	6.1	1639.0	*	3	10361759	0.
1	1410	426	3.	6.3	1639.1	*	2	12241093	0.	6.1	1639.0	*	3	10381760	0.
1	1412	427	3.	6.3	1639.1	*	2	12261094	0.	6.1	1639.0	*	3	10401761	0.
1	1414	428	3.	6.2	1639.1	*	2	12281095	0.	6.1	1639.0	*	3	10421762	0.
1	1416	429	3.	6.2	1639.1	*	2	12301096	0.	6.1	1639.0	*	3	10441763	0.
1	1418	430	2.	6.2	1639.1	*	2	12321097	0.	6.1	1639.0	*	3	10461764	0.
1	1420	431	2.	6.2	1639.1	*	2	12341098	0.	6.1	1639.0	*	3	10481765	0.
1	1422	432	2.	6.2	1639.1	*	2	12361099	0.	6.1	1639.0	*	3	10501766	0.
1	1424	433	2.	6.2	1639.1	*	2	12381100	0.	6.1	1639.0	*	3	10521767	0.
1	1426	434	2.	6.2	1639.1	*	2	12401101	0.	6.1	1639.0	*	3	10541768	0.
1	1428	435	2.	6.2	1639.1	*	2	12421102	0.	6.1	1639.0	*	3	10561769	0.
1	1430	436	2.	6.2	1639.1	*	2	12441103	0.	6.1	1639.0	*	3	10581770	0.
1	1432	437	2.	6.2	1639.1	*	2	12461104	0.	6.1	1639.0	*	3	11001771	0.
1	1434	438	2.	6.2	1639.1	*	2	12481105	0.	6.1	1639.0	*	3	11021772	0.
1	1436	439	2.	6.2	1639.1	*	2	12501106	0.	6.1	1639.0	*	3	11041773	0.
1	1438	440	1.	6.2	1639.1	*	2	12521107	0.	6.1	1639.0	*	3	11061774	0.
1	1440	441	1.	6.2	1639.1	*	2	12541108	0.	6.1	1639.0	*	3	11081775	0.
1	1442	442	1.	6.2	1639.1	*	2	12561109	0.	6.1	1639.0	*	3	11101776	0.
1	1444	443	1.	6.2	1639.1	*	2	12581110	0.	6.1	1639.0	*	3	11121777	0.
1	1446	444	1.	6.2	1639.0	*	2	13001111	0.	6.1	1639.0	*	3	11141778	0.
1	1448	445	1.	6.2	1639.0	*	2	13021112	0.	6.1	1639.0	*	3	11161779	0.
1	1450	446	1.	6.2	1639.0	*	2	13041113	0.	6.1	1639.0	*	3	11181780	0.
1	1452	447	1.	6.2	1639.0	*	2	13061114	0.	6.1	1639.0	*	3	11201781	0.
1	1454	448	1.	6.2	1639.0	*	2	13081115	0.	6.1	1639.0	*	3	11221782	0.
1	1456	449	1.	6.2	1639.0	*	2	13101116	0.	6.1	1639.0	*	3	11241783	0.
1	1458	450	1.	6.1	1639.0	*	2	13121117	0.	6.1	1639.0	*	3	11261784	0.
1	1500	451	1.	6.1	1639.0	*	2	13141118	0.	6.1	1639.0	*	3	11281785	0.
1	1502	452	1.	6.1	1639.0	*	2	13161119	0.	6.1	1639.0	*	3	11301786	0.
1	1504	453	1.	6.1	1639.0	*	2	13181120	0.	6.1	1639.0	*	3	11321787	0.
1	1506	454	1.	6.1	1639.0	*	2	13201121	0.	6.1	1639.0	*	3	11341788	0.
1	1508	455	1.	6.1	1639.0	*	2	13221122	0.	6.1	1639.0	*	3	11361789	0.
1	1510	456	1.	6.1	1639.0	*	2	13241123	0.	6.1	1639.0	*	3	11381790	0.
1	1512	457	1.	6.1	1639.0	*	2	13261124	0.	6.1	1639.0	*	3	11401791	0.
1	1514	458	1.	6.1	1639.0	*	2	13281125	0.	6.1	1639.0	*	3	11421792	0.
1	1516	459	1.	6.1	1639.0	*	2	13301126	0.	6.1	1639.0	*	3	11441793	0.
1	1518	460	1.	6.1	1639.0	*	2	13321127	0.	6.1	1639.0	*	3	11461794	0.
1	1520	461	1.	6.1	1639.0	*	2	13341128	0.	6.1	1639.0	*	3	11481795	0.
1	1522	462	0.	6.1	1639.0	*	2	13361129	0.	6.1	1639.0	*	3	11501796	0.
1	1524	463	0.	6.1	1639.0	*	2	13381130	0.	6.1	1639.0	*	3	11521797	0.
1	1526	464	0.	6.1	1639.0	*	2	13401131	0.	6.1	1639.0	*	3	11541798	0.
1	1528	465	0.	6.1	1639.0	*	2	13421132	0.	6.1	1639.0	*	3	11561799	0.
1	1530	466	0.	6.1	1639.0	*	2	13441133	0.	6.1	1639.0	*	3	11581800	0.
1	1532	467	0.	6.1	1639.0	*	2	13461134	0.	6.1	1639.0	*	3	12001801	0.
1	1534	468	0.	6.1	1639.0	*	2	13481135	0.	6.1	1639.0	*	3	12021802	0.
1	1536	469	0.	6.1	1639.0	*	2	13501136	0.	6.1	1639.0	*	3	12041803	0.
1	1538	470	0.	6.1	1639.0	*	2	13521137	0.	6.1	1639.0	*	3	12061804	0.
1	1540	471	0.	6.1	1639.0	*	2	13541138	0.	6.1	1639.0	*	3	12081805	0.
1	1542	472	0.	6.1	1639.0	*	2	13561139	0.	6.1	1639.0	*	3	12101806	0.
1	1544	473	0.	6.1	1639.0	*	2	13581140	0.	6.1	1639.0	*	3	12121807	0.
1	1546	474	0.	6.1	1639.0	*	2	14001141	0.	6.1	1639.0	*	3	12141808	0.
1	1548	475	0.	6.1	1639.0	*	2	14021142	0.	6.1	1639.0	*	3	12161809	0.
1	1550	476	0.	6.1	1639.0	*	2	14041143	0.	6.1	1639.0	*	3	12181810	0.
1	1552	477	0.	6.1	1639.0	*	2	14061144	0.	6.1	1639.0	*	3	12201811	0.
1	1554	478	0.	6.1	1639.0	*	2	14081145	0.	6.1	1639.0	*	3	12221812	0.
1	1556	479	0.	6.1	1639.0	*	2	14101146	0.	6.1	1639.0	*	3	12241813	0.
1	1558	480	0.	6.1	1639.0	*	2	14121147	0.	6.1	1639.0	*	3	12261814	0.
1	1600	481	0.	6.1	1639.0	*	2	14141148	0.	6.1	1639.0	*	3	12281815	0.
1	1602	482	0.	6.1	1639.0	*	2	14161149	0.	6.1	1639.0	*	3	12301816	0.
1	1604	483	0.	6.1	1639.0	*	2	14181150	0.	6.1	1639.0	*	3	12321817	0.
1	1606	484	0.	6.1	1639.0	*	2	14201151	0.	6.1	1639.0	*	3	12341818	0.
1	1608	485	0.	6.1	1639.0	*	2	14221152	0.	6.1	1639.0	*	3	12361819	0.
1	1610	486	0.	6.1	1639.0	*	2	14241153	0.	6.1	1639.0	*	3	12381820	0.
1	1612	487	0.	6.1	1639.0	*	2	14261154	0.	6.1	1639.0	*	3	12401821	0.
1	1614	488	0.	6.1	1639.0	*	2	14281155	0.	6.1	1639.0	*	3	12421822	0.
1	1616	489	0.	6.1	1639.0	*	2	14301156	0.	6.1	1639.0	*	3	12441823	0.
1	1618	490	0.	6.1	1639.0	*	2	14321157	0.	6.1	1639.0	*	3	12461824	0.
1	1620	491	0.	6.1	1639.0	*	2	14341158	0.	6.1	1639.0	*	3	12481825	0.
1	1622	492	0.	6.1	1639.0	*	2	14361159	0.	6.1	1639.0	*	3	12501826	0.
1	1624	493	0.	6.1	1639.0	*	2	14381160	0.	6.1	1639.0	*	3	12521827	0.
1	1626	494	0.	6.1	1639.0	*	2	14401161	0.	6.1	1639.0	*	3	12541828	0.
1	1628	495	0.	6.1	1639.0	*	2	14421162	0.	6.1	1639.0	*	3	12561829	0.
1	1630	496	0.	6.1	1639.0	*	2	14441163	0.	6.1	1639.0	*	3	12581830	0.
1	1632	497	0.	6.1	1639.0	*	2	14461164	0.	6.1	1639.0	*	3	13001831	0.
1	1634	498	0.	6.1	1639.0	*	2	14481165	0.	6.1	1639.0	*	3	13021832	0.
1	1636	499	0.	6.1	1639.0	*	2	14501166	0.	6.1	1639.0	*	3	13041833	0.
1	1638	500	0.	6.1	1639.0	*	2	14521167	0.	6.1	1639.0	*	3	13061834	0.
1	1640	501	0.	6.1	1639.0	*	2	14541168	0.	6.1	1639.0	*	3	13081835	0.
1	1642	502	0.	6.1	1639.0	*	2	14561169	0.	6.1	1639.0	*	3	13101836	0.
1	1644	503	0.	6.1	1639.0	*	2	14581170	0.	6.1	1639.0	*	3	13121837	0.
1	1646	504	0.	6.1	1639.0	*	2	15001171	0.	6.1	1639.0	*	3	13141838	0.
1	1648	505	0.	6.1	1639.0	*	2	15021172	0.	6.1	1639.0	*	3	13161839	0.
1	1650	506	0.	6.1	1639.0	*	2	15041173	0.	6.1	1639.0	*	3	13181840	0.
1	1652	507	0.	6.1	1639.0	*	2	15061174	0.	6.1	1639.0	*	3	13201841	0.
1	1654	508	0.	6.1	1639.0	*	2	15081175	0.	6.1	1639.0	*	3	13221842	0.

1	1656	509	0.	6.1	1639.0	*	2	15101176	0.	6.1	1639.0	*	3	13241843	0.
1	1658	510	0.	6.1	1639.0	*	2	15121177	0.	6.1	1639.0	*	3	13261844	0.
1	1700	511	0.	6.1	1639.0	*	2	15141178	0.	6.1	1639.0	*	3	13281845	0.
	1702	512	0.	6.1	1639.0	*	2	15161179	0.	6.1	1639.0	*	3	13301846	0.
	1704	513	0.	6.1	1639.0	*	2	15181180	0.	6.1	1639.0	*	3	13321847	0.
	1706	514	0.	6.1	1639.0	*	2	15201181	0.	6.1	1639.0	*	3	13341848	0.
1	1708	515	0.	6.1	1639.0	*	2	15221182	0.	6.1	1639.0	*	3	13361849	0.
1	1710	516	0.	6.1	1639.0	*	2	15241183	0.	6.1	1639.0	*	3	13381850	0.
1	1712	517	0.	6.1	1639.0	*	2	15261184	0.	6.1	1639.0	*	3	13401851	0.
1	1714	518	0.	6.1	1639.0	*	2	15281185	0.	6.1	1639.0	*	3	13421852	0.
1	1716	519	0.	6.1	1639.0	*	2	15301186	0.	6.1	1639.0	*	3	13441853	0.
1	1718	520	0.	6.1	1639.0	*	2	15321187	0.	6.1	1639.0	*	3	13461854	0.
1	1720	521	0.	6.1	1639.0	*	2	15341188	0.	6.1	1639.0	*	3	13481855	0.
1	1722	522	0.	6.1	1639.0	*	2	15361189	0.	6.1	1639.0	*	3	13501856	0.
1	1724	523	0.	6.1	1639.0	*	2	15381190	0.	6.1	1639.0	*	3	13521857	0.
1	1726	524	0.	6.1	1639.0	*	2	15401191	0.	6.1	1639.0	*	3	13541858	0.
1	1728	525	0.	6.1	1639.0	*	2	15421192	0.	6.1	1639.0	*	3	13561859	0.
1	1730	526	0.	6.1	1639.0	*	2	15441193	0.	6.1	1639.0	*	3	13581860	0.
1	1732	527	0.	6.1	1639.0	*	2	15461194	0.	6.1	1639.0	*	3	14001861	0.
1	1734	528	0.	6.1	1639.0	*	2	15481195	0.	6.1	1639.0	*	3	14021862	0.
1	1736	529	0.	6.1	1639.0	*	2	15501196	0.	6.1	1639.0	*	3	14041863	0.
1	1738	530	0.	6.1	1639.0	*	2	15521197	0.	6.1	1639.0	*	3	14061864	0.
1	1740	531	0.	6.1	1639.0	*	2	15541198	0.	6.1	1639.0	*	3	14081865	0.
1	1742	532	0.	6.1	1639.0	*	2	15561199	0.	6.1	1639.0	*	3	14101866	0.
1	1744	533	0.	6.1	1639.0	*	2	15581200	0.	6.1	1639.0	*	3	14121867	0.
1	1746	534	0.	6.1	1639.0	*	2	16001201	0.	6.1	1639.0	*	3	14141868	0.
1	1748	535	0.	6.1	1639.0	*	2	16021202	0.	6.1	1639.0	*	3	14161869	0.
1	1750	536	0.	6.1	1639.0	*	2	16041203	0.	6.1	1639.0	*	3	14181870	0.
1	1752	537	0.	6.1	1639.0	*	2	16061204	0.	6.1	1639.0	*	3	14201871	0.
1	1754	538	0.	6.1	1639.0	*	2	16081205	0.	6.1	1639.0	*	3	14221872	0.
1	1756	539	0.	6.1	1639.0	*	2	16101206	0.	6.1	1639.0	*	3	14241873	0.
1	1758	540	0.	6.1	1639.0	*	2	16121207	0.	6.1	1639.0	*	3	14261874	0.
1	1800	541	0.	6.1	1639.0	*	2	16141208	0.	6.1	1639.0	*	3	14281875	0.
1	1802	542	0.	6.1	1639.0	*	2	16161209	0.	6.1	1639.0	*	3	14301876	0.
1	1804	543	0.	6.1	1639.0	*	2	16181210	0.	6.1	1639.0	*	3	14321877	0.
1	1806	544	0.	6.1	1639.0	*	2	16201211	0.	6.1	1639.0	*	3	14341878	0.
1	1808	545	0.	6.1	1639.0	*	2	16221212	0.	6.1	1639.0	*	3	14361879	0.
1	1810	546	0.	6.1	1639.0	*	2	16241213	0.	6.1	1639.0	*	3	14381880	0.
1	1812	547	0.	6.1	1639.0	*	2	16261214	0.	6.1	1639.0	*	3	14401881	0.
	1814	548	0.	6.1	1639.0	*	2	16281215	0.	6.1	1639.0	*	3	14421882	0.
	1816	549	0.	6.1	1639.0	*	2	16301216	0.	6.1	1639.0	*	3	14441883	0.
	1818	550	0.	6.1	1639.0	*	2	16321217	0.	6.1	1639.0	*	3	14461884	0.
1	1820	551	0.	6.1	1639.0	*	2	16341218	0.	6.1	1639.0	*	3	14481885	0.
1	1822	552	0.	6.1	1639.0	*	2	16361219	0.	6.1	1639.0	*	3	14501886	0.
1	1824	553	0.	6.1	1639.0	*	2	16381220	0.	6.1	1639.0	*	3	14521887	0.
1	1826	554	0.	6.1	1639.0	*	2	16401221	0.	6.1	1639.0	*	3	14541888	0.
1	1828	555	0.	6.1	1639.0	*	2	16421222	0.	6.1	1639.0	*	3	14561889	0.
1	1830	556	0.	6.1	1639.0	*	2	16441223	0.	6.1	1639.0	*	3	14581890	0.
1	1832	557	0.	6.1	1639.0	*	2	16461224	0.	6.1	1639.0	*	3	15001891	0.
1	1834	558	0.	6.1	1639.0	*	2	16481225	0.	6.1	1639.0	*	3	15021892	0.
1	1836	559	0.	6.1	1639.0	*	2	16501226	0.	6.1	1639.0	*	3	15041893	0.
1	1838	560	0.	6.1	1639.0	*	2	16521227	0.	6.1	1639.0	*	3	15061894	0.
1	1840	561	0.	6.1	1639.0	*	2	16541228	0.	6.1	1639.0	*	3	15081895	0.
1	1842	562	0.	6.1	1639.0	*	2	16561229	0.	6.1	1639.0	*	3	15101896	0.
1	1844	563	0.	6.1	1639.0	*	2	16581230	0.	6.1	1639.0	*	3	15121897	0.
1	1846	564	0.	6.1	1639.0	*	2	17001231	0.	6.1	1639.0	*	3	15141898	0.
1	1848	565	0.	6.1	1639.0	*	2	17021232	0.	6.1	1639.0	*	3	15161899	0.
1	1850	566	0.	6.1	1639.0	*	2	17041233	0.	6.1	1639.0	*	3	15181900	0.
1	1852	567	0.	6.1	1639.0	*	2	17061234	0.	6.1	1639.0	*	3	15201901	0.
1	1854	568	0.	6.1	1639.0	*	2	17081235	0.	6.1	1639.0	*	3	15221902	0.
1	1856	569	0.	6.1	1639.0	*	2	17101236	0.	6.1	1639.0	*	3	15241903	0.
1	1858	570	0.	6.1	1639.0	*	2	17121237	0.	6.1	1639.0	*	3	15261904	0.
1	1900	571	0.	6.1	1639.0	*	2	17141238	0.	6.1	1639.0	*	3	15281905	0.
1	1902	572	0.	6.1	1639.0	*	2	17161239	0.	6.1	1639.0	*	3	15301906	0.
1	1904	573	0.	6.1	1639.0	*	2	17181240	0.	6.1	1639.0	*	3	15321907	0.
1	1906	574	0.	6.1	1639.0	*	2	17201241	0.	6.1	1639.0	*	3	15341908	0.
1	1908	575	0.	6.1	1639.0	*	2	17221242	0.	6.1	1639.0	*	3	15361909	0.
1	1910	576	0.	6.1	1639.0	*	2	17241243	0.	6.1	1639.0	*	3	15381910	0.
1	1912	577	0.	6.1	1639.0	*	2	17261244	0.	6.1	1639.0	*	3	15401911	0.
1	1914	578	0.	6.1	1639.0	*	2	17281245	0.	6.1	1639.0	*	3	15421912	0.
1	1916	579	0.	6.1	1639.0	*	2	17301246	0.	6.1	1639.0	*	3	15441913	0.
1	1918	580	0.	6.1	1639.0	*	2	17321247	0.	6.1	1639.0	*	3	15461914	0.
1	1920	581	0.	6.1	1639.0	*	2	17341248	0.	6.1	1639.0	*	3	15481915	0.
1	1922	582	0.	6.1	1639.0	*	2	17361249	0.	6.1	1639.0	*	3	15501916	0.
1	1924	583	0.	6.1	1639.0	*	2	17381250	0.	6.1	1639.0	*	3	15521917	0.
	1926	584	0.	6.1	1639.0	*	2	17401251	0.	6.1	1639.0	*	3	15541918	0.
	1928	585	0.	6.1	1639.0	*	2	17421252	0.	6.1	1639.0	*	3	15561919	0.
1	1930	586	0.	6.1	1639.0	*	2	17441253	0.	6.1	1639.0	*	3	15581920	0.
1	1932	587	0.	6.1	1639.0	*	2	17461254	0.	6.1	1639.0	*	3	16001921	0.
1	1934	588	0.	6.1	1639.0	*	2	17481255	0.	6.1	1639.0	*	3	16021922	0.
1	1936	589	0.	6.1	1639.0	*	2	17501256	0.	6.1	1639.0	*	3	16041923	0.
1	1938	590	0.	6.1	1639.0	*	2	17521257	0.	6.1	1639.0	*	3	16061924	0.
1	1940	591	0.	6.1	1639.0	*	2	17541258	0.	6.1	1639.0	*	3	16081925	0.
1	1942	592	0.	6.1	1639.0	*	2	17561259	0.	6.1	1639.0	*	3	16101926	0.

1	1944	593	0.	6.1	1639.0	*	2	17581260	0.	6.1	1639.0	*	3	16121927	0.
1	1946	594	0.	6.1	1639.0	*	2	18001261	0.	6.1	1639.0	*	3	16141928	0.
1	1948	595	0.	6.1	1639.0	*	2	18021262	0.	6.1	1639.0	*	3	16161929	0.
1	1950	596	0.	6.1	1639.0	*	2	18041263	0.	6.1	1639.0	*	3	16181930	0.
1	1952	597	0.	6.1	1639.0	*	2	18061264	0.	6.1	1639.0	*	3	16201931	0.
1	1954	598	0.	6.1	1639.0	*	2	18081265	0.	6.1	1639.0	*	3	16221932	0.
1	1956	599	0.	6.1	1639.0	*	2	18101266	0.	6.1	1639.0	*	3	16241933	0.
1	1958	600	0.	6.1	1639.0	*	2	18121267	0.	6.1	1639.0	*	3	16261934	0.
1	2000	601	0.	6.1	1639.0	*	2	18141268	0.	6.1	1639.0	*	3	16281935	0.
1	2002	602	0.	6.1	1639.0	*	2	18161269	0.	6.1	1639.0	*	3	16301936	0.
1	2004	603	0.	6.1	1639.0	*	2	18181270	0.	6.1	1639.0	*	3	16321937	0.
1	2006	604	0.	6.1	1639.0	*	2	18201271	0.	6.1	1639.0	*	3	16341938	0.
1	2008	605	0.	6.1	1639.0	*	2	18221272	0.	6.1	1639.0	*	3	16361939	0.
1	2010	606	0.	6.1	1639.0	*	2	18241273	0.	6.1	1639.0	*	3	16381940	0.
1	2012	607	0.	6.1	1639.0	*	2	18261274	0.	6.1	1639.0	*	3	16401941	0.
1	2014	608	0.	6.1	1639.0	*	2	18281275	0.	6.1	1639.0	*	3	16421942	0.
1	2016	609	0.	6.1	1639.0	*	2	18301276	0.	6.1	1639.0	*	3	16441943	0.
1	2018	610	0.	6.1	1639.0	*	2	18321277	0.	6.1	1639.0	*	3	16461944	0.
1	2020	611	0.	6.1	1639.0	*	2	18341278	0.	6.1	1639.0	*	3	16481945	0.
1	2022	612	0.	6.1	1639.0	*	2	18361279	0.	6.1	1639.0	*	3	16501946	0.
1	2024	613	0.	6.1	1639.0	*	2	18381280	0.	6.1	1639.0	*	3	16521947	0.
1	2026	614	0.	6.1	1639.0	*	2	18401281	0.	6.1	1639.0	*	3	16541948	0.
1	2028	615	0.	6.1	1639.0	*	2	18421282	0.	6.1	1639.0	*	3	16561949	0.
1	2030	616	0.	6.1	1639.0	*	2	18441283	0.	6.1	1639.0	*	3	16581950	0.
1	2032	617	0.	6.1	1639.0	*	2	18461284	0.	6.1	1639.0	*	3	17001951	0.
1	2034	618	0.	6.1	1639.0	*	2	18481285	0.	6.1	1639.0	*	3	17021952	0.
1	2036	619	0.	6.1	1639.0	*	2	18501286	0.	6.1	1639.0	*	3	17041953	0.
1	2038	620	0.	6.1	1639.0	*	2	18521287	0.	6.1	1639.0	*	3	17061954	0.
1	2040	621	0.	6.1	1639.0	*	2	18541288	0.	6.1	1639.0	*	3	17081955	0.
1	2042	622	0.	6.1	1639.0	*	2	18561289	0.	6.1	1639.0	*	3	17101956	0.
1	2044	623	0.	6.1	1639.0	*	2	18581290	0.	6.1	1639.0	*	3	17121957	0.
1	2046	624	0.	6.1	1639.0	*	2	19001291	0.	6.1	1639.0	*	3	17141958	0.
1	2048	625	0.	6.1	1639.0	*	2	19021292	0.	6.1	1639.0	*	3	17161959	0.
1	2050	626	0.	6.1	1639.0	*	2	19041293	0.	6.1	1639.0	*	3	17181960	0.
1	2052	627	0.	6.1	1639.0	*	2	19061294	0.	6.1	1639.0	*	3	17201961	0.
1	2054	628	0.	6.1	1639.0	*	2	19081295	0.	6.1	1639.0	*	3	17221962	0.
1	2056	629	0.	6.1	1639.0	*	2	19101296	0.	6.1	1639.0	*	3	17241963	0.
1	2058	630	0.	6.1	1639.0	*	2	19121297	0.	6.1	1639.0	*	3	17261964	0.
1	2100	631	0.	6.1	1639.0	*	2	19141298	0.	6.1	1639.0	*	3	17281965	0.
1	2102	632	0.	6.1	1639.0	*	2	19161299	0.	6.1	1639.0	*	3	17301966	0.
1	2104	633	0.	6.1	1639.0	*	2	19181300	0.	6.1	1639.0	*	3	17321967	0.
1	2106	634	0.	6.1	1639.0	*	2	19201301	0.	6.1	1639.0	*	3	17341968	0.
1	2108	635	0.	6.1	1639.0	*	2	19221302	0.	6.1	1639.0	*	3	17361969	0.
1	2110	636	0.	6.1	1639.0	*	2	19241303	0.	6.1	1639.0	*	3	17381970	0.
1	2112	637	0.	6.1	1639.0	*	2	19261304	0.	6.1	1639.0	*	3	17401971	0.
1	2114	638	0.	6.1	1639.0	*	2	19281305	0.	6.1	1639.0	*	3	17421972	0.
1	2116	639	0.	6.1	1639.0	*	2	19301306	0.	6.1	1639.0	*	3	17441973	0.
1	2118	640	0.	6.1	1639.0	*	2	19321307	0.	6.1	1639.0	*	3	17461974	0.
1	2120	641	0.	6.1	1639.0	*	2	19341308	0.	6.1	1639.0	*	3	17481975	0.
1	2122	642	0.	6.1	1639.0	*	2	19361309	0.	6.1	1639.0	*	3	17501976	0.
1	2124	643	0.	6.1	1639.0	*	2	19381310	0.	6.1	1639.0	*	3	17521977	0.
1	2126	644	0.	6.1	1639.0	*	2	19401311	0.	6.1	1639.0	*	3	17541978	0.
1	2128	645	0.	6.1	1639.0	*	2	19421312	0.	6.1	1639.0	*	3	17561979	0.
1	2130	646	0.	6.1	1639.0	*	2	19441313	0.	6.1	1639.0	*	3	17581980	0.
1	2132	647	0.	6.1	1639.0	*	2	19461314	0.	6.1	1639.0	*	3	18001981	0.
1	2134	648	0.	6.1	1639.0	*	2	19481315	0.	6.1	1639.0	*	3	18021982	0.
1	2136	649	0.	6.1	1639.0	*	2	19501316	0.	6.1	1639.0	*	3	18041983	0.
1	2138	650	0.	6.1	1639.0	*	2	19521317	0.	6.1	1639.0	*	3	18061984	0.
1	2140	651	0.	6.1	1639.0	*	2	19541318	0.	6.1	1639.0	*	3	18081985	0.
1	2142	652	0.	6.1	1639.0	*	2	19561319	0.	6.1	1639.0	*	3	18101986	0.
1	2144	653	0.	6.1	1639.0	*	2	19581320	0.	6.1	1639.0	*	3	18121987	0.
1	2146	654	0.	6.1	1639.0	*	2	20001321	0.	6.1	1639.0	*	3	18141988	0.
1	2148	655	0.	6.1	1639.0	*	2	20021322	0.	6.1	1639.0	*	3	18161989	0.
1	2150	656	0.	6.1	1639.0	*	2	20041323	0.	6.1	1639.0	*	3	18181990	0.
1	2152	657	0.	6.1	1639.0	*	2	20061324	0.	6.1	1639.0	*	3	18201991	0.
1	2154	658	0.	6.1	1639.0	*	2	20081325	0.	6.1	1639.0	*	3	18221992	0.
1	2156	659	0.	6.1	1639.0	*	2	20101326	0.	6.1	1639.0	*	3	18241993	0.
1	2158	660	0.	6.1	1639.0	*	2	20121327	0.	6.1	1639.0	*	3	18261994	0.
1	2200	661	0.	6.1	1639.0	*	2	20141328	0.	6.1	1639.0	*	3	18281995	0.
1	2202	662	0.	6.1	1639.0	*	2	20161329	0.	6.1	1639.0	*	3	18301996	0.
1	2204	663	0.	6.1	1639.0	*	2	20181330	0.	6.1	1639.0	*	3	18321997	0.
1	2206	664	0.	6.1	1639.0	*	2	20201331	0.	6.1	1639.0	*	3	18341998	0.
1	2208	665	0.	6.1	1639.0	*	2	20221332	0.	6.1	1639.0	*	3	18361999	0.
1	2210	666	0.	6.1	1639.0	*	2	20241333	0.	6.1	1639.0	*	3	18382000	0.
1	2212	667	0.	6.1	1639.0	*	2	20261334	0.	6.1	1639.0	*			
						*						*			

****

	PEAK FLOW	TIME		MAXIMUM AVERAGE FLOW			
				6-HR	24-HR	72-HR	66.63-HR
+	(CFS)	(HR)					
			(CFS)				
+	104.	12.50		7.	2.	1.	1.
			(INCHES)	.041	.041	.041	.041

	6-HR	24-HR	72-HR	66.63-HR
(AC-FT)	3.	3.	3.	3.

PEAK STORAGE (AC-FT)	TIME (HR)	MAXIMUM AVERAGE STORAGE 6-HR	24-HR	72-HR	66.63-HR
8.	12.50	6.	6.	5.	5.

PEAK STAGE (FEET)	TIME (HR)	MAXIMUM AVERAGE STAGE 6-HR	24-HR	72-HR	66.63-HR
+ 1640.40	12.50	1639.19	1639.05	1637.39	1637.39

CUMULATIVE AREA = 1.59 SQ MI

****

HYDROGRAPH AT SMCDB
TRANSPOSITION AREA 20.0 SQ MI

****

DA	MON	HRMN	ORD	OUTFLOW	STORAGE	STAGE	*	DA	MON	HRMN	ORD	OUTFLOW	STORAGE	STAGE	*	DA	MON	HRMN	ORD	OUTFLOW	STOR
1		0000	1	0.	.0	1630.0	*	1		2214	668	0.	6.1	1639.0	*	2		20281335		0.	
1		0002	2	0.	.0	1630.0	*	1		2216	669	0.	6.1	1639.0	*	2		20301336		0.	
1		0004	3	0.	.0	1630.0	*	1		2218	670	0.	6.1	1639.0	*	2		20321337		0.	
1		0006	4	0.	.0	1630.0	*	1		2220	671	0.	6.1	1639.0	*	2		20341338		0.	
1		0008	5	0.	.0	1630.0	*	1		2222	672	0.	6.1	1639.0	*	2		20361339		0.	
1		0010	6	0.	.0	1630.0	*	1		2224	673	0.	6.1	1639.0	*	2		20381340		0.	
1		0012	7	0.	.0	1630.0	*	1		2226	674	0.	6.1	1639.0	*	2		20401341		0.	
1		0014	8	0.	.0	1630.0	*	1		2228	675	0.	6.1	1639.0	*	2		20421342		0.	
1		0016	9	0.	.0	1630.0	*	1		2230	676	0.	6.1	1639.0	*	2		20441343		0.	
1		0018	10	0.	.0	1630.0	*	1		2232	677	0.	6.1	1639.0	*	2		20461344		0.	
1		0020	11	0.	.0	1630.0	*	1		2234	678	0.	6.1	1639.0	*	2		20481345		0.	
1		0022	12	0.	.0	1630.0	*	1		2236	679	0.	6.1	1639.0	*	2		20501346		0.	
1		0024	13	0.	.0	1630.0	*	1		2238	680	0.	6.1	1639.0	*	2		20521347		0.	
1		0026	14	0.	.0	1630.0	*	1		2240	681	0.	6.1	1639.0	*	2		20541348		0.	
1		0028	15	0.	.0	1630.0	*	1		2242	682	0.	6.1	1639.0	*	2		20561349		0.	
1		0030	16	0.	.0	1630.0	*	1		2244	683	0.	6.1	1639.0	*	2		20581350		0.	
		0032	17	0.	.0	1630.0	*	1		2246	684	0.	6.1	1639.0	*	2		21001351		0.	
		0034	18	0.	.0	1630.0	*	1		2248	685	0.	6.1	1639.0	*	2		21021352		0.	
1		0036	19	0.	.0	1630.0	*	1		2250	686	0.	6.1	1639.0	*	2		21041353		0.	
1		0038	20	0.	.0	1630.0	*	1		2252	687	0.	6.1	1639.0	*	2		21061354		0.	
1		0040	21	0.	.0	1630.0	*	1		2254	688	0.	6.1	1639.0	*	2		21081355		0.	
1		0042	22	0.	.0	1630.0	*	1		2256	689	0.	6.1	1639.0	*	2		21101356		0.	
1		0044	23	0.	.0	1630.0	*	1		2258	690	0.	6.1	1639.0	*	2		21121357		0.	
1		0046	24	0.	.0	1630.0	*	1		2300	691	0.	6.1	1639.0	*	2		21141358		0.	
1		0048	25	0.	.0	1630.0	*	1		2302	692	0.	6.1	1639.0	*	2		21161359		0.	
1		0050	26	0.	.0	1630.0	*	1		2304	693	0.	6.1	1639.0	*	2		21181360		0.	
1		0052	27	0.	.0	1630.0	*	1		2306	694	0.	6.1	1639.0	*	2		21201361		0.	
1		0054	28	0.	.0	1630.0	*	1		2308	695	0.	6.1	1639.0	*	2		21221362		0.	
1		0056	29	0.	.0	1630.0	*	1		2310	696	0.	6.1	1639.0	*	2		21241363		0.	
1		0058	30	0.	.0	1630.0	*	1		2312	697	0.	6.1	1639.0	*	2		21261364		0.	
1		0100	31	0.	.0	1630.0	*	1		2314	698	0.	6.1	1639.0	*	2		21281365		0.	
1		0102	32	0.	.0	1630.0	*	1		2316	699	0.	6.1	1639.0	*	2		21301366		0.	
1		0104	33	0.	.0	1630.0	*	1		2318	700	0.	6.1	1639.0	*	2		21321367		0.	
1		0106	34	0.	.0	1630.0	*	1		2320	701	0.	6.1	1639.0	*	2		21341368		0.	
1		0108	35	0.	.0	1630.0	*	1		2322	702	0.	6.1	1639.0	*	2		21361369		0.	
1		0110	36	0.	.0	1630.0	*	1		2324	703	0.	6.1	1639.0	*	2		21381370		0.	
1		0112	37	0.	.0	1630.0	*	1		2326	704	0.	6.1	1639.0	*	2		21401371		0.	
1		0114	38	0.	.0	1630.0	*	1		2328	705	0.	6.1	1639.0	*	2		21421372		0.	
1		0116	39	0.	.0	1630.0	*	1		2330	706	0.	6.1	1639.0	*	2		21441373		0.	
1		0118	40	0.	.0	1630.0	*	1		2332	707	0.	6.1	1639.0	*	2		21461374		0.	
1		0120	41	0.	.0	1630.0	*	1		2334	708	0.	6.1	1639.0	*	2		21481375		0.	
1		0122	42	0.	.0	1630.0	*	1		2336	709	0.	6.1	1639.0	*	2		21501376		0.	
1		0124	43	0.	.0	1630.0	*	1		2338	710	0.	6.1	1639.0	*	2		21521377		0.	
1		0126	44	0.	.0	1630.0	*	1		2340	711	0.	6.1	1639.0	*	2		21541378		0.	
1		0128	45	0.	.0	1630.0	*	1		2342	712	0.	6.1	1639.0	*	2		21561379		0.	
1		0130	46	0.	.0	1630.0	*	1		2344	713	0.	6.1	1639.0	*	2		21581380		0.	
1		0132	47	0.	.0	1630.0	*	1		2346	714	0.	6.1	1639.0	*	2		22001381		0.	
1		0134	48	0.	.0	1630.0	*	1		2348	715	0.	6.1	1639.0	*	2		22021382		0.	
1		0136	49	0.	.0	1630.0	*	1		2350	716	0.	6.1	1639.0	*	2		22041383		0.	
1		0138	50	0.	.0	1630.0	*	1		2352	717	0.	6.1	1639.0	*	2		22061384		0.	
1		0140	51	0.	.0	1630.0	*	1		2354	718	0.	6.1	1639.0	*	2		22081385		0.	
		0142	52	0.	.0	1630.0	*	1		2356	719	0.	6.1	1639.0	*	2		22101386		0.	
		0144	53	0.	.0	1630.0	*	1		2358	720	0.	6.1	1639.0	*	2		22121387		0.	
		0146	54	0.	.0	1630.0	*	2		0000	721	0.	6.1	1639.0	*	2		22141388		0.	
1		0148	55	0.	.0	1630.0	*	2		0002	722	0.	6.1	1639.0	*	2		22161389		0.	
1		0150	56	0.	.0	1630.0	*	2		0004	723	0.	6.1	1639.0	*	2		22181390		0.	
1		0152	57	0.	.0	1630.0	*	2		0006	724	0.	6.1	1639.0	*	2		22201391		0.	
1		0154	58	0.	.0	1630.0	*	2		0008	725	0.	6.1	1639.0	*	2		22221392		0.	
1		0156	59	0.	.0	1630.0	*	2		0010	726	0.	6.1	1639.0	*	2		22241393		0.	
1		0158	60	0.	.0	1630.0	*	2		0012	727	0.	6.1	1639.0	*	2		22261394		0.	

1	0200	61	0.	.0	1630.0	*	2	0014	728	0.	6.1	1639.0	*	2	22281395	0.
1	0202	62	0.	.0	1630.0	*	2	0016	729	0.	6.1	1639.0	*	2	22301396	0.
1	0204	63	0.	.0	1630.0	*	2	0018	730	0.	6.1	1639.0	*	2	22321397	0.
1	0206	64	0.	.0	1630.0	*	2	0020	731	0.	6.1	1639.0	*	2	22341398	0.
1	0208	65	0.	.0	1630.0	*	2	0022	732	0.	6.1	1639.0	*	2	22361399	0.
1	0210	66	0.	.0	1630.0	*	2	0024	733	0.	6.1	1639.0	*	2	22381400	0.
1	0212	67	0.	.0	1630.0	*	2	0026	734	0.	6.1	1639.0	*	2	22401401	0.
1	0214	68	0.	.0	1630.0	*	2	0028	735	0.	6.1	1639.0	*	2	22421402	0.
1	0216	69	0.	.0	1630.0	*	2	0030	736	0.	6.1	1639.0	*	2	22441403	0.
1	0218	70	0.	.0	1630.0	*	2	0032	737	0.	6.1	1639.0	*	2	22461404	0.
1	0220	71	0.	.0	1630.0	*	2	0034	738	0.	6.1	1639.0	*	2	22481405	0.
1	0222	72	0.	.0	1630.0	*	2	0036	739	0.	6.1	1639.0	*	2	22501406	0.
1	0224	73	0.	.0	1630.0	*	2	0038	740	0.	6.1	1639.0	*	2	22521407	0.
1	0226	74	0.	.0	1630.0	*	2	0040	741	0.	6.1	1639.0	*	2	22541408	0.
1	0228	75	0.	.0	1630.0	*	2	0042	742	0.	6.1	1639.0	*	2	22561409	0.
1	0230	76	0.	.0	1630.0	*	2	0044	743	0.	6.1	1639.0	*	2	22581410	0.
1	0232	77	0.	.0	1630.0	*	2	0046	744	0.	6.1	1639.0	*	2	23001411	0.
1	0234	78	0.	.0	1630.0	*	2	0048	745	0.	6.1	1639.0	*	2	23021412	0.
1	0236	79	0.	.0	1630.0	*	2	0050	746	0.	6.1	1639.0	*	2	23041413	0.
1	0238	80	0.	.0	1630.0	*	2	0052	747	0.	6.1	1639.0	*	2	23061414	0.
1	0240	81	0.	.0	1630.0	*	2	0054	748	0.	6.1	1639.0	*	2	23081415	0.
1	0242	82	0.	.0	1630.0	*	2	0056	749	0.	6.1	1639.0	*	2	23101416	0.
1	0244	83	0.	.0	1630.0	*	2	0058	750	0.	6.1	1639.0	*	2	23121417	0.
1	0246	84	0.	.0	1630.0	*	2	0100	751	0.	6.1	1639.0	*	2	23141418	0.
1	0248	85	0.	.0	1630.0	*	2	0102	752	0.	6.1	1639.0	*	2	23161419	0.
1	0250	86	0.	.0	1630.0	*	2	0104	753	0.	6.1	1639.0	*	2	23181420	0.
1	0252	87	0.	.0	1630.0	*	2	0106	754	0.	6.1	1639.0	*	2	23201421	0.
1	0254	88	0.	.0	1630.0	*	2	0108	755	0.	6.1	1639.0	*	2	23221422	0.
1	0256	89	0.	.0	1630.0	*	2	0110	756	0.	6.1	1639.0	*	2	23241423	0.
1	0258	90	0.	.0	1630.0	*	2	0112	757	0.	6.1	1639.0	*	2	23261424	0.
1	0300	91	0.	.0	1630.0	*	2	0114	758	0.	6.1	1639.0	*	2	23281425	0.
1	0302	92	0.	.0	1630.0	*	2	0116	759	0.	6.1	1639.0	*	2	23301426	0.
1	0304	93	0.	.0	1630.0	*	2	0118	760	0.	6.1	1639.0	*	2	23321427	0.
1	0306	94	0.	.0	1630.0	*	2	0120	761	0.	6.1	1639.0	*	2	23341428	0.
1	0308	95	0.	.0	1630.0	*	2	0122	762	0.	6.1	1639.0	*	2	23361429	0.
1	0310	96	0.	.0	1630.0	*	2	0124	763	0.	6.1	1639.0	*	2	23381430	0.
1	0312	97	0.	.0	1630.0	*	2	0126	764	0.	6.1	1639.0	*	2	23401431	0.
1	0314	98	0.	.0	1630.0	*	2	0128	765	0.	6.1	1639.0	*	2	23421432	0.
1	0316	99	0.	.0	1630.0	*	2	0130	766	0.	6.1	1639.0	*	2	23441433	0.
1	0318	100	0.	.0	1630.0	*	2	0132	767	0.	6.1	1639.0	*	2	23461434	0.
1	0320	101	0.	.0	1630.0	*	2	0134	768	0.	6.1	1639.0	*	2	23481435	0.
1	0322	102	0.	.0	1630.0	*	2	0136	769	0.	6.1	1639.0	*	2	23501436	0.
1	0324	103	0.	.0	1630.0	*	2	0138	770	0.	6.1	1639.0	*	2	23521437	0.
1	0326	104	0.	.0	1630.0	*	2	0140	771	0.	6.1	1639.0	*	2	23541438	0.
1	0328	105	0.	.0	1630.0	*	2	0142	772	0.	6.1	1639.0	*	2	23561439	0.
1	0330	106	0.	.0	1630.0	*	2	0144	773	0.	6.1	1639.0	*	2	23581440	0.
1	0332	107	0.	.0	1630.0	*	2	0146	774	0.	6.1	1639.0	*	3	00001441	0.
1	0334	108	0.	.0	1630.0	*	2	0148	775	0.	6.1	1639.0	*	3	00021442	0.
1	0336	109	0.	.0	1630.0	*	2	0150	776	0.	6.1	1639.0	*	3	00041443	0.
1	0338	110	0.	.0	1630.0	*	2	0152	777	0.	6.1	1639.0	*	3	00061444	0.
1	0340	111	0.	.0	1630.0	*	2	0154	778	0.	6.1	1639.0	*	3	00081445	0.
1	0342	112	0.	.0	1630.0	*	2	0156	779	0.	6.1	1639.0	*	3	00101446	0.
1	0344	113	0.	.0	1630.0	*	2	0158	780	0.	6.1	1639.0	*	3	00121447	0.
1	0346	114	0.	.0	1630.0	*	2	0200	781	0.	6.1	1639.0	*	3	00141448	0.
1	0348	115	0.	.0	1630.0	*	2	0202	782	0.	6.1	1639.0	*	3	00161449	0.
1	0350	116	0.	.0	1630.0	*	2	0204	783	0.	6.1	1639.0	*	3	00181450	0.
1	0352	117	0.	.0	1630.0	*	2	0206	784	0.	6.1	1639.0	*	3	00201451	0.
1	0354	118	0.	.0	1630.0	*	2	0208	785	0.	6.1	1639.0	*	3	00221452	0.
1	0356	119	0.	.0	1630.0	*	2	0210	786	0.	6.1	1639.0	*	3	00241453	0.
1	0358	120	0.	.0	1630.0	*	2	0212	787	0.	6.1	1639.0	*	3	00261454	0.
1	0400	121	0.	.0	1630.0	*	2	0214	788	0.	6.1	1639.0	*	3	00281455	0.
1	0402	122	0.	.0	1630.0	*	2	0216	789	0.	6.1	1639.0	*	3	00301456	0.
1	0404	123	0.	.0	1630.0	*	2	0218	790	0.	6.1	1639.0	*	3	00321457	0.
1	0406	124	0.	.0	1630.0	*	2	0220	791	0.	6.1	1639.0	*	3	00341458	0.
1	0408	125	0.	.0	1630.0	*	2	0222	792	0.	6.1	1639.0	*	3	00361459	0.
1	0410	126	0.	.0	1630.0	*	2	0224	793	0.	6.1	1639.0	*	3	00381460	0.
1	0412	127	0.	.0	1630.0	*	2	0226	794	0.	6.1	1639.0	*	3	00401461	0.
1	0414	128	0.	.0	1630.0	*	2	0228	795	0.	6.1	1639.0	*	3	00421462	0.
1	0416	129	0.	.0	1630.0	*	2	0230	796	0.	6.1	1639.0	*	3	00441463	0.
1	0418	130	0.	.0	1630.0	*	2	0232	797	0.	6.1	1639.0	*	3	00461464	0.
1	0420	131	0.	.0	1630.0	*	2	0234	798	0.	6.1	1639.0	*	3	00481465	0.
1	0422	132	0.	.0	1630.0	*	2	0236	799	0.	6.1	1639.0	*	3	00501466	0.
1	0424	133	0.	.0	1630.0	*	2	0238	800	0.	6.1	1639.0	*	3	00521467	0.
1	0426	134	0.	.0	1630.0	*	2	0240	801	0.	6.1	1639.0	*	3	00541468	0.
1	0428	135	0.	.0	1630.0	*	2	0242	802	0.	6.1	1639.0	*	3	00561469	0.
1	0430	136	0.	.0	1630.0	*	2	0244	803	0.	6.1	1639.0	*	3	00581470	0.
1	0432	137	0.	.0	1630.0	*	2	0246	804	0.	6.1	1639.0	*	3	01001471	0.
1	0434	138	0.	.0	1630.0	*	2	0248	805	0.	6.1	1639.0	*	3	01021472	0.
1	0436	139	0.	.0	1630.0	*	2	0250	806	0.	6.1	1639.0	*	3	01041473	0.
1	0438	140	0.	.0	1630.0	*	2	0252	807	0.	6.1	1639.0	*	3	01061474	0.
1	0440	141	0.	.0	1630.0	*	2	0254	808	0.	6.1	1639.0	*	3	01081475	0.
1	0442	142	0.	.0	1630.0	*	2	0256	809	0.	6.1	1639.0	*	3	01101476	0.
1	0444	143	0.	.0	1630.0	*	2	0258	810	0.	6.1	1639.0	*	3	01121477	0.
1	0446	144	0.	.0	1630.0	*	2	0300	811	0.	6.1	1639.0	*	3	01141478	0.

1	0448	145	0.	.0	1630.0	*	2	0302	812	0.	6.1	1639.0	*	3	01161479	0.
1	0450	146	0.	.0	1630.0	*	2	0304	813	0.	6.1	1639.0	*	3	01181480	0.
1	0452	147	0.	.0	1630.0	*	2	0306	814	0.	6.1	1639.0	*	3	01201481	0.
	0454	148	0.	.0	1630.0	*	2	0308	815	0.	6.1	1639.0	*	3	01221482	0.
	0456	149	0.	.0	1630.0	*	2	0310	816	0.	6.1	1639.0	*	3	01241483	0.
	0458	150	0.	.0	1630.0	*	2	0312	817	0.	6.1	1639.0	*	3	01261484	0.
1	0500	151	0.	.0	1630.0	*	2	0314	818	0.	6.1	1639.0	*	3	01281485	0.
1	0502	152	0.	.0	1630.0	*	2	0316	819	0.	6.1	1639.0	*	3	01301486	0.
1	0504	153	0.	.0	1630.0	*	2	0318	820	0.	6.1	1639.0	*	3	01321487	0.
1	0506	154	0.	.0	1630.0	*	2	0320	821	0.	6.1	1639.0	*	3	01341488	0.
1	0508	155	0.	.0	1630.0	*	2	0322	822	0.	6.1	1639.0	*	3	01361489	0.
1	0510	156	0.	.0	1630.0	*	2	0324	823	0.	6.1	1639.0	*	3	01381490	0.
1	0512	157	0.	.0	1630.0	*	2	0326	824	0.	6.1	1639.0	*	3	01401491	0.
1	0514	158	0.	.0	1630.0	*	2	0328	825	0.	6.1	1639.0	*	3	01421492	0.
1	0516	159	0.	.0	1630.0	*	2	0330	826	0.	6.1	1639.0	*	3	01441493	0.
1	0518	160	0.	.0	1630.0	*	2	0332	827	0.	6.1	1639.0	*	3	01461494	0.
1	0520	161	0.	.0	1630.0	*	2	0334	828	0.	6.1	1639.0	*	3	01481495	0.
1	0522	162	0.	.0	1630.0	*	2	0336	829	0.	6.1	1639.0	*	3	01501496	0.
1	0524	163	0.	.0	1630.0	*	2	0338	830	0.	6.1	1639.0	*	3	01521497	0.
1	0526	164	0.	.0	1630.0	*	2	0340	831	0.	6.1	1639.0	*	3	01541498	0.
1	0528	165	0.	.0	1630.0	*	2	0342	832	0.	6.1	1639.0	*	3	01561499	0.
1	0530	166	0.	.0	1630.0	*	2	0344	833	0.	6.1	1639.0	*	3	01581500	0.
1	0532	167	0.	.0	1630.0	*	2	0346	834	0.	6.1	1639.0	*	3	02001501	0.
1	0534	168	0.	.0	1630.0	*	2	0348	835	0.	6.1	1639.0	*	3	02021502	0.
1	0536	169	0.	.0	1630.0	*	2	0350	836	0.	6.1	1639.0	*	3	02041503	0.
1	0538	170	0.	.0	1630.0	*	2	0352	837	0.	6.1	1639.0	*	3	02061504	0.
1	0540	171	0.	.0	1630.0	*	2	0354	838	0.	6.1	1639.0	*	3	02081505	0.
1	0542	172	0.	.0	1630.0	*	2	0356	839	0.	6.1	1639.0	*	3	02101506	0.
1	0544	173	0.	.0	1630.0	*	2	0358	840	0.	6.1	1639.0	*	3	02121507	0.
1	0546	174	0.	.0	1630.0	*	2	0400	841	0.	6.1	1639.0	*	3	02141508	0.
1	0548	175	0.	.0	1630.0	*	2	0402	842	0.	6.1	1639.0	*	3	02161509	0.
1	0550	176	0.	.0	1630.0	*	2	0404	843	0.	6.1	1639.0	*	3	02181510	0.
1	0552	177	0.	.0	1630.0	*	2	0406	844	0.	6.1	1639.0	*	3	02201511	0.
1	0554	178	0.	.0	1630.0	*	2	0408	845	0.	6.1	1639.0	*	3	02221512	0.
1	0556	179	0.	.0	1630.0	*	2	0410	846	0.	6.1	1639.0	*	3	02241513	0.
1	0558	180	0.	.0	1630.0	*	2	0412	847	0.	6.1	1639.0	*	3	02261514	0.
1	0600	181	0.	.0	1630.0	*	2	0414	848	0.	6.1	1639.0	*	3	02281515	0.
1	0602	182	0.	.0	1630.0	*	2	0416	849	0.	6.1	1639.0	*	3	02301516	0.
1	0604	183	0.	.0	1630.0	*	2	0418	850	0.	6.1	1639.0	*	3	02321517	0.
	0606	184	0.	.0	1630.0	*	2	0420	851	0.	6.1	1639.0	*	3	02341518	0.
	0608	185	0.	.0	1630.0	*	2	0422	852	0.	6.1	1639.0	*	3	02361519	0.
	0610	186	0.	.0	1630.0	*	2	0424	853	0.	6.1	1639.0	*	3	02381520	0.
1	0612	187	0.	.0	1630.0	*	2	0426	854	0.	6.1	1639.0	*	3	02401521	0.
1	0614	188	0.	.0	1630.0	*	2	0428	855	0.	6.1	1639.0	*	3	02421522	0.
1	0616	189	0.	.0	1630.0	*	2	0430	856	0.	6.1	1639.0	*	3	02441523	0.
1	0618	190	0.	.0	1630.0	*	2	0432	857	0.	6.1	1639.0	*	3	02461524	0.
1	0620	191	0.	.0	1630.0	*	2	0434	858	0.	6.1	1639.0	*	3	02481525	0.
1	0622	192	0.	.0	1630.0	*	2	0436	859	0.	6.1	1639.0	*	3	02501526	0.
1	0624	193	0.	.0	1630.0	*	2	0438	860	0.	6.1	1639.0	*	3	02521527	0.
1	0626	194	0.	.0	1630.0	*	2	0440	861	0.	6.1	1639.0	*	3	02541528	0.
1	0628	195	0.	.0	1630.0	*	2	0442	862	0.	6.1	1639.0	*	3	02561529	0.
1	0630	196	0.	.0	1630.0	*	2	0444	863	0.	6.1	1639.0	*	3	02581530	0.
1	0632	197	0.	.0	1630.0	*	2	0446	864	0.	6.1	1639.0	*	3	03001531	0.
1	0634	198	0.	.0	1630.0	*	2	0448	865	0.	6.1	1639.0	*	3	03021532	0.
1	0636	199	0.	.0	1630.0	*	2	0450	866	0.	6.1	1639.0	*	3	03041533	0.
1	0638	200	0.	.0	1630.0	*	2	0452	867	0.	6.1	1639.0	*	3	03061534	0.
1	0640	201	0.	.0	1630.0	*	2	0454	868	0.	6.1	1639.0	*	3	03081535	0.
1	0642	202	0.	.0	1630.0	*	2	0456	869	0.	6.1	1639.0	*	3	03101536	0.
1	0644	203	0.	.0	1630.0	*	2	0458	870	0.	6.1	1639.0	*	3	03121537	0.
1	0646	204	0.	.0	1630.0	*	2	0500	871	0.	6.1	1639.0	*	3	03141538	0.
1	0648	205	0.	.0	1630.0	*	2	0502	872	0.	6.1	1639.0	*	3	03161539	0.
1	0650	206	0.	.0	1630.0	*	2	0504	873	0.	6.1	1639.0	*	3	03181540	0.
1	0652	207	0.	.0	1630.0	*	2	0506	874	0.	6.1	1639.0	*	3	03201541	0.
1	0654	208	0.	.0	1630.0	*	2	0508	875	0.	6.1	1639.0	*	3	03221542	0.
1	0656	209	0.	.0	1630.0	*	2	0510	876	0.	6.1	1639.0	*	3	03241543	0.
1	0658	210	0.	.0	1630.0	*	2	0512	877	0.	6.1	1639.0	*	3	03261544	0.
1	0700	211	0.	.0	1630.0	*	2	0514	878	0.	6.1	1639.0	*	3	03281545	0.
1	0702	212	0.	.0	1630.0	*	2	0516	879	0.	6.1	1639.0	*	3	03301546	0.
1	0704	213	0.	.0	1630.0	*	2	0518	880	0.	6.1	1639.0	*	3	03321547	0.
1	0706	214	0.	.0	1630.0	*	2	0520	881	0.	6.1	1639.0	*	3	03341548	0.
1	0708	215	0.	.0	1630.0	*	2	0522	882	0.	6.1	1639.0	*	3	03361549	0.
1	0710	216	0.	.0	1630.0	*	2	0524	883	0.	6.1	1639.0	*	3	03381550	0.
1	0712	217	0.	.0	1630.0	*	2	0526	884	0.	6.1	1639.0	*	3	03401551	0.
1	0714	218	0.	.0	1630.0	*	2	0528	885	0.	6.1	1639.0	*	3	03421552	0.
1	0716	219	0.	.0	1630.0	*	2	0530	886	0.	6.1	1639.0	*	3	03441553	0.
	0718	220	0.	.0	1630.0	*	2	0532	887	0.	6.1	1639.0	*	3	03461554	0.
	0720	221	0.	.0	1630.0	*	2	0534	888	0.	6.1	1639.0	*	3	03481555	0.
	0722	222	0.	.0	1630.0	*	2	0536	889	0.	6.1	1639.0	*	3	03501556	0.
1	0724	223	0.	.0	1630.0	*	2	0538	890	0.	6.1	1639.0	*	3	03521557	0.
1	0726	224	0.	.0	1630.0	*	2	0540	891	0.	6.1	1639.0	*	3	03541558	0.
1	0728	225	0.	.0	1630.0	*	2	0542	892	0.	6.1	1639.0	*	3	03561559	0.
1	0730	226	0.	.0	1630.0	*	2	0544	893	0.	6.1	1639.0	*	3	03581560	0.
1	0732	227	0.	.0	1630.0	*	2	0546	894	0.	6.1	1639.0	*	3	04001561	0.
1	0734	228	0.	.0	1630.0	*	2	0548	895	0.	6.1	1639.0	*	3	04021562	0.

1	0736	229	0.	.0	1630.0	*	2	0550	896	0.	6.1	1639.0	*	3	04041563	0.
1	0738	230	0.	.0	1630.0	*	2	0552	897	0.	6.1	1639.0	*	3	04061564	0.
1	0740	231	0.	.0	1630.0	*	2	0554	898	0.	6.1	1639.0	*	3	04081565	0.
1	0742	232	0.	.0	1630.0	*	2	0556	899	0.	6.1	1639.0	*	3	04101566	0.
1	0744	233	0.	.0	1630.0	*	2	0558	900	0.	6.1	1639.0	*	3	04121567	0.
1	0746	234	0.	.0	1630.0	*	2	0600	901	0.	6.1	1639.0	*	3	04141568	0.
1	0748	235	0.	.0	1630.0	*	2	0602	902	0.	6.1	1639.0	*	3	04161569	0.
1	0750	236	0.	.0	1630.0	*	2	0604	903	0.	6.1	1639.0	*	3	04181570	0.
1	0752	237	0.	.0	1630.0	*	2	0606	904	0.	6.1	1639.0	*	3	04201571	0.
1	0754	238	0.	.0	1630.0	*	2	0608	905	0.	6.1	1639.0	*	3	04221572	0.
1	0756	239	0.	.0	1630.0	*	2	0610	906	0.	6.1	1639.0	*	3	04241573	0.
1	0758	240	0.	.0	1630.0	*	2	0612	907	0.	6.1	1639.0	*	3	04261574	0.
1	0800	241	0.	.0	1630.0	*	2	0614	908	0.	6.1	1639.0	*	3	04281575	0.
1	0802	242	0.	.0	1630.0	*	2	0616	909	0.	6.1	1639.0	*	3	04301576	0.
1	0804	243	0.	.0	1630.0	*	2	0618	910	0.	6.1	1639.0	*	3	04321577	0.
1	0806	244	0.	.0	1630.0	*	2	0620	911	0.	6.1	1639.0	*	3	04341578	0.
1	0808	245	0.	.0	1630.0	*	2	0622	912	0.	6.1	1639.0	*	3	04361579	0.
1	0810	246	0.	.0	1630.0	*	2	0624	913	0.	6.1	1639.0	*	3	04381580	0.
1	0812	247	0.	.0	1630.0	*	2	0626	914	0.	6.1	1639.0	*	3	04401581	0.
1	0814	248	0.	.0	1630.0	*	2	0628	915	0.	6.1	1639.0	*	3	04421582	0.
1	0816	249	0.	.0	1630.0	*	2	0630	916	0.	6.1	1639.0	*	3	04441583	0.
1	0818	250	0.	.0	1630.0	*	2	0632	917	0.	6.1	1639.0	*	3	04461584	0.
1	0820	251	0.	.0	1630.0	*	2	0634	918	0.	6.1	1639.0	*	3	04481585	0.
1	0822	252	0.	.0	1630.0	*	2	0636	919	0.	6.1	1639.0	*	3	04501586	0.
1	0824	253	0.	.0	1630.0	*	2	0638	920	0.	6.1	1639.0	*	3	04521587	0.
1	0826	254	0.	.0	1630.0	*	2	0640	921	0.	6.1	1639.0	*	3	04541588	0.
1	0828	255	0.	.0	1630.0	*	2	0642	922	0.	6.1	1639.0	*	3	04561589	0.
1	0830	256	0.	.0	1630.0	*	2	0644	923	0.	6.1	1639.0	*	3	04581590	0.
1	0832	257	0.	.0	1630.0	*	2	0646	924	0.	6.1	1639.0	*	3	05001591	0.
1	0834	258	0.	.0	1630.0	*	2	0648	925	0.	6.1	1639.0	*	3	05021592	0.
1	0836	259	0.	.0	1630.0	*	2	0650	926	0.	6.1	1639.0	*	3	05041593	0.
1	0838	260	0.	.0	1630.0	*	2	0652	927	0.	6.1	1639.0	*	3	05061594	0.
1	0840	261	0.	.0	1630.0	*	2	0654	928	0.	6.1	1639.0	*	3	05081595	0.
1	0842	262	0.	.0	1630.0	*	2	0656	929	0.	6.1	1639.0	*	3	05101596	0.
1	0844	263	0.	.0	1630.0	*	2	0658	930	0.	6.1	1639.0	*	3	05121597	0.
1	0846	264	0.	.0	1630.0	*	2	0700	931	0.	6.1	1639.0	*	3	05141598	0.
1	0848	265	0.	.0	1630.0	*	2	0702	932	0.	6.1	1639.0	*	3	05161599	0.
1	0850	266	0.	.0	1630.0	*	2	0704	933	0.	6.1	1639.0	*	3	05181600	0.
1	0852	267	0.	.0	1630.0	*	2	0706	934	0.	6.1	1639.0	*	3	05201601	0.
1	0854	268	0.	.0	1630.0	*	2	0708	935	0.	6.1	1639.0	*	3	05221602	0.
1	0856	269	0.	.0	1630.0	*	2	0710	936	0.	6.1	1639.0	*	3	05241603	0.
1	0858	270	0.	.0	1630.0	*	2	0712	937	0.	6.1	1639.0	*	3	05261604	0.
1	0900	271	0.	.0	1630.0	*	2	0714	938	0.	6.1	1639.0	*	3	05281605	0.
1	0902	272	0.	.0	1630.0	*	2	0716	939	0.	6.1	1639.0	*	3	05301606	0.
1	0904	273	0.	.0	1630.0	*	2	0718	940	0.	6.1	1639.0	*	3	05321607	0.
1	0906	274	0.	.0	1630.0	*	2	0720	941	0.	6.1	1639.0	*	3	05341608	0.
1	0908	275	0.	.0	1630.0	*	2	0722	942	0.	6.1	1639.0	*	3	05361609	0.
1	0910	276	0.	.0	1630.0	*	2	0724	943	0.	6.1	1639.0	*	3	05381610	0.
1	0912	277	0.	.0	1630.0	*	2	0726	944	0.	6.1	1639.0	*	3	05401611	0.
1	0914	278	0.	.0	1630.0	*	2	0728	945	0.	6.1	1639.0	*	3	05421612	0.
1	0916	279	0.	.0	1630.0	*	2	0730	946	0.	6.1	1639.0	*	3	05441613	0.
1	0918	280	0.	.0	1630.0	*	2	0732	947	0.	6.1	1639.0	*	3	05461614	0.
1	0920	281	0.	.0	1630.0	*	2	0734	948	0.	6.1	1639.0	*	3	05481615	0.
1	0922	282	0.	.0	1630.0	*	2	0736	949	0.	6.1	1639.0	*	3	05501616	0.
1	0924	283	0.	.0	1630.0	*	2	0738	950	0.	6.1	1639.0	*	3	05521617	0.
1	0926	284	0.	.0	1630.0	*	2	0740	951	0.	6.1	1639.0	*	3	05541618	0.
1	0928	285	0.	.0	1630.0	*	2	0742	952	0.	6.1	1639.0	*	3	05561619	0.
1	0930	286	0.	.0	1630.0	*	2	0744	953	0.	6.1	1639.0	*	3	05581620	0.
1	0932	287	0.	.0	1630.0	*	2	0746	954	0.	6.1	1639.0	*	3	06001621	0.
1	0934	288	0.	.0	1630.0	*	2	0748	955	0.	6.1	1639.0	*	3	06021622	0.
1	0936	289	0.	.0	1630.0	*	2	0750	956	0.	6.1	1639.0	*	3	06041623	0.
1	0938	290	0.	.0	1630.0	*	2	0752	957	0.	6.1	1639.0	*	3	06061624	0.
1	0940	291	0.	.0	1630.0	*	2	0754	958	0.	6.1	1639.0	*	3	06081625	0.
1	0942	292	0.	.0	1630.0	*	2	0756	959	0.	6.1	1639.0	*	3	06101626	0.
1	0944	293	0.	.0	1630.0	*	2	0758	960	0.	6.1	1639.0	*	3	06121627	0.
1	0946	294	0.	.0	1630.0	*	2	0800	961	0.	6.1	1639.0	*	3	06141628	0.
1	0948	295	0.	.0	1630.0	*	2	0802	962	0.	6.1	1639.0	*	3	06161629	0.
1	0950	296	0.	.0	1630.0	*	2	0804	963	0.	6.1	1639.0	*	3	06181630	0.
1	0952	297	0.	.0	1630.0	*	2	0806	964	0.	6.1	1639.0	*	3	06201631	0.
1	0954	298	0.	.0	1630.0	*	2	0808	965	0.	6.1	1639.0	*	3	06221632	0.
1	0956	299	0.	.0	1630.0	*	2	0810	966	0.	6.1	1639.0	*	3	06241633	0.
1	0958	300	0.	.0	1630.0	*	2	0812	967	0.	6.1	1639.0	*	3	06261634	0.
1	1000	301	0.	.0	1630.0	*	2	0814	968	0.	6.1	1639.0	*	3	06281635	0.
1	1002	302	0.	.0	1630.0	*	2	0816	969	0.	6.1	1639.0	*	3	06301636	0.
1	1004	303	0.	.0	1630.0	*	2	0818	970	0.	6.1	1639.0	*	3	06321637	0.
1	1006	304	0.	.0	1630.0	*	2	0820	971	0.	6.1	1639.0	*	3	06341638	0.
1	1008	305	0.	.0	1630.0	*	2	0822	972	0.	6.1	1639.0	*	3	06361639	0.
1	1010	306	0.	.0	1630.0	*	2	0824	973	0.	6.1	1639.0	*	3	06381640	0.
1	1012	307	0.	.0	1630.0	*	2	0826	974	0.	6.1	1639.0	*	3	06401641	0.
1	1014	308	0.	.0	1630.0	*	2	0828	975	0.	6.1	1639.0	*	3	06421642	0.
1	1016	309	0.	.0	1630.0	*	2	0830	976	0.	6.1	1639.0	*	3	06441643	0.
1	1018	310	0.	.0	1630.0	*	2	0832	977	0.	6.1	1639.0	*	3	06461644	0.
1	1020	311	0.	.0	1630.0	*	2	0834	978	0.	6.1	1639.0	*	3	06481645	0.
1	1022	312	0.	.0	1630.0	*	2	0836	979	0.	6.1	1639.0	*	3	06501646	0.

1	1024	313	0.	.0	1630.0	*	2	0838	980	0.	6.1	1639.0	*	3	06521647	0.
1	1026	314	0.	.0	1630.0	*	2	0840	981	0.	6.1	1639.0	*	3	06541648	0.
1	1028	315	0.	.0	1630.0	*	2	0842	982	0.	6.1	1639.0	*	3	06561649	0.
	1030	316	0.	.0	1630.0	*	2	0844	983	0.	6.1	1639.0	*	3	06581650	0.
	1032	317	0.	.0	1630.0	*	2	0846	984	0.	6.1	1639.0	*	3	07001651	0.
	1034	318	0.	.0	1630.0	*	2	0848	985	0.	6.1	1639.0	*	3	07021652	0.
1	1036	319	0.	.0	1630.0	*	2	0850	986	0.	6.1	1639.0	*	3	07041653	0.
1	1038	320	0.	.0	1630.0	*	2	0852	987	0.	6.1	1639.0	*	3	07061654	0.
1	1040	321	0.	.0	1630.0	*	2	0854	988	0.	6.1	1639.0	*	3	07081655	0.
1	1042	322	0.	.0	1630.0	*	2	0856	989	0.	6.1	1639.0	*	3	07101656	0.
1	1044	323	0.	.0	1630.0	*	2	0858	990	0.	6.1	1639.0	*	3	07121657	0.
1	1046	324	0.	.0	1630.0	*	2	0900	991	0.	6.1	1639.0	*	3	07141658	0.
1	1048	325	0.	.0	1630.0	*	2	0902	992	0.	6.1	1639.0	*	3	07161659	0.
1	1050	326	0.	.0	1630.0	*	2	0904	993	0.	6.1	1639.0	*	3	07181660	0.
1	1052	327	0.	.0	1630.0	*	2	0906	994	0.	6.1	1639.0	*	3	07201661	0.
1	1054	328	0.	.0	1630.0	*	2	0908	995	0.	6.1	1639.0	*	3	07221662	0.
1	1056	329	0.	.0	1630.0	*	2	0910	996	0.	6.1	1639.0	*	3	07241663	0.
1	1058	330	0.	.0	1630.0	*	2	0912	997	0.	6.1	1639.0	*	3	07261664	0.
1	1100	331	0.	.0	1630.0	*	2	0914	998	0.	6.1	1639.0	*	3	07281665	0.
1	1102	332	0.	.0	1630.0	*	2	0916	999	0.	6.1	1639.0	*	3	07301666	0.
1	1104	333	0.	.0	1630.0	*	2	09181000		0.	6.1	1639.0	*	3	07321667	0.
1	1106	334	0.	.0	1630.0	*	2	09201001		0.	6.1	1639.0	*	3	07341668	0.
1	1108	335	0.	.0	1630.0	*	2	09221002		0.	6.1	1639.0	*	3	07361669	0.
1	1110	336	0.	.0	1630.0	*	2	09241003		0.	6.1	1639.0	*	3	07381670	0.
1	1112	337	0.	.0	1630.0	*	2	09261004		0.	6.1	1639.0	*	3	07401671	0.
1	1114	338	0.	.0	1630.0	*	2	09281005		0.	6.1	1639.0	*	3	07421672	0.
1	1116	339	0.	.0	1630.0	*	2	09301006		0.	6.1	1639.0	*	3	07441673	0.
1	1118	340	0.	.0	1630.0	*	2	09321007		0.	6.1	1639.0	*	3	07461674	0.
1	1120	341	0.	.0	1630.0	*	2	09341008		0.	6.1	1639.0	*	3	07481675	0.
1	1122	342	0.	.0	1630.0	*	2	09361009		0.	6.1	1639.0	*	3	07501676	0.
1	1124	343	0.	.0	1630.0	*	2	09381010		0.	6.1	1639.0	*	3	07521677	0.
1	1126	344	0.	.0	1630.0	*	2	09401011		0.	6.1	1639.0	*	3	07541678	0.
1	1128	345	0.	.0	1630.0	*	2	09421012		0.	6.1	1639.0	*	3	07561679	0.
1	1130	346	0.	.0	1630.0	*	2	09441013		0.	6.1	1639.0	*	3	07581680	0.
1	1132	347	0.	.0	1630.0	*	2	09461014		0.	6.1	1639.0	*	3	08001681	0.
1	1134	348	0.	.0	1630.0	*	2	09481015		0.	6.1	1639.0	*	3	08021682	0.
1	1136	349	0.	.0	1630.0	*	2	09501016		0.	6.1	1639.0	*	3	08041683	0.
1	1138	350	0.	.0	1630.0	*	2	09521017		0.	6.1	1639.0	*	3	08061684	0.
1	1140	351	0.	.0	1630.0	*	2	09541018		0.	6.1	1639.0	*	3	08081685	0.
	1142	352	0.	.0	1630.0	*	2	09561019		0.	6.1	1639.0	*	3	08101686	0.
	1144	353	0.	.0	1630.0	*	2	09581020		0.	6.1	1639.0	*	3	08121687	0.
	1146	354	0.	.0	1630.0	*	2	10001021		0.	6.1	1639.0	*	3	08141688	0.
1	1148	355	0.	.0	1630.0	*	2	10021022		0.	6.1	1639.0	*	3	08161689	0.
1	1150	356	0.	.0	1630.0	*	2	10041023		0.	6.1	1639.0	*	3	08181690	0.
1	1152	357	0.	.0	1630.0	*	2	10061024		0.	6.1	1639.0	*	3	08201691	0.
1	1154	358	0.	.0	1630.2	*	2	10081025		0.	6.1	1639.0	*	3	08221692	0.
1	1156	359	0.	.2	1631.0	*	2	10101026		0.	6.1	1639.0	*	3	08241693	0.
1	1158	360	0.	.4	1631.7	*	2	10121027		0.	6.1	1639.0	*	3	08261694	0.
1	1200	361	0.	.7	1632.5	*	2	10141028		0.	6.1	1639.0	*	3	08281695	0.
1	1202	362	0.	1.1	1633.4	*	2	10161029		0.	6.1	1639.0	*	3	08301696	0.
1	1204	363	0.	1.6	1634.3	*	2	10181030		0.	6.1	1639.0	*	3	08321697	0.
1	1206	364	0.	2.2	1635.1	*	2	10201031		0.	6.1	1639.0	*	3	08341698	0.
1	1208	365	0.	2.8	1635.8	*	2	10221032		0.	6.1	1639.0	*	3	08361699	0.
1	1210	366	0.	3.4	1636.5	*	2	10241033		0.	6.1	1639.0	*	3	08381700	0.
1	1212	367	0.	4.0	1637.1	*	2	10261034		0.	6.1	1639.0	*	3	08401701	0.
1	1214	368	0.	4.6	1637.7	*	2	10281035		0.	6.1	1639.0	*	3	08421702	0.
1	1216	369	0.	5.2	1638.3	*	2	10301036		0.	6.1	1639.0	*	3	08441703	0.
1	1218	370	0.	5.8	1638.8	*	2	10321037		0.	6.1	1639.0	*	3	08461704	0.
1	1220	371	4.	6.3	1639.2	*	2	10341038		0.	6.1	1639.0	*	3	08481705	0.
1	1222	372	13.	6.8	1639.5	*	2	10361039		0.	6.1	1639.0	*	3	08501706	0.
1	1224	373	20.	7.2	1639.8	*	2	10381040		0.	6.1	1639.0	*	3	08521707	0.
1	1226	374	33.	7.5	1640.0	*	2	10401041		0.	6.1	1639.0	*	3	08541708	0.
1	1228	375	63.	7.8	1640.2	*	2	10421042		0.	6.1	1639.0	*	3	08561709	0.
1	1230	376	78.	7.9	1640.3	*	2	10441043		0.	6.1	1639.0	*	3	08581710	0.
1	1232	377	79.	7.9	1640.3	*	2	10461044		0.	6.1	1639.0	*	3	09001711	0.
1	1234	378	69.	7.8	1640.2	*	2	10481045		0.	6.1	1639.0	*	3	09021712	0.
1	1236	379	51.	7.7	1640.1	*	2	10501046		0.	6.1	1639.0	*	3	09041713	0.
1	1238	380	36.	7.6	1640.1	*	2	10521047		0.	6.1	1639.0	*	3	09061714	0.
1	1240	381	26.	7.5	1640.0	*	2	10541048		0.	6.1	1639.0	*	3	09081715	0.
1	1242	382	24.	7.4	1640.0	*	2	10561049		0.	6.1	1639.0	*	3	09101716	0.
1	1244	383	23.	7.4	1639.9	*	2	10581050		0.	6.1	1639.0	*	3	09121717	0.
1	1246	384	22.	7.3	1639.9	*	2	11001051		0.	6.1	1639.0	*	3	09141718	0.
1	1248	385	21.	7.2	1639.8	*	2	11021052		0.	6.1	1639.0	*	3	09161719	0.
1	1250	386	20.	7.2	1639.8	*	2	11041053		0.	6.1	1639.0	*	3	09181720	0.
1	1252	387	19.	7.1	1639.7	*	2	11061054		0.	6.1	1639.0	*	3	09201721	0.
	1254	388	18.	7.1	1639.7	*	2	11081055		0.	6.1	1639.0	*	3	09221722	0.
	1256	389	17.	7.0	1639.7	*	2	11101056		0.	6.1	1639.0	*	3	09241723	0.
	1258	390	16.	7.0	1639.6	*	2	11121057		0.	6.1	1639.0	*	3	09261724	0.
1	1300	391	15.	6.9	1639.6	*	2	11141058		0.	6.1	1639.0	*	3	09281725	0.
1	1302	392	15.	6.9	1639.6	*	2	11161059		0.	6.1	1639.0	*	3	09301726	0.
1	1304	393	14.	6.9	1639.6	*	2	11181060		0.	6.1	1639.0	*	3	09321727	0.
1	1306	394	13.	6.8	1639.5	*	2	11201061		0.	6.1	1639.0	*	3	09341728	0.
1	1308	395	13.	6.8	1639.5	*	2	11221062		0.	6.1	1639.0	*	3	09361729	0.
1	1310	396	12.	6.8	1639.5	*	2	11241063		0.	6.1	1639.0	*	3	09381730	0.

1	1312	397	11.	6.7	1639.5	*	2	11261064	0.	6.1	1639.0	*	3	09401731	0.
1	1314	398	11.	6.7	1639.4	*	2	11281065	0.	6.1	1639.0	*	3	09421732	0.
1	1316	399	10.	6.7	1639.4	*	2	11301066	0.	6.1	1639.0	*	3	09441733	0.
1	1318	400	10.	6.6	1639.4	*	2	11321067	0.	6.1	1639.0	*	3	09461734	0.
1	1320	401	9.	6.6	1639.4	*	2	11341068	0.	6.1	1639.0	*	3	09481735	0.
1	1322	402	9.	6.6	1639.4	*	2	11361069	0.	6.1	1639.0	*	3	09501736	0.
1	1324	403	8.	6.6	1639.3	*	2	11381070	0.	6.1	1639.0	*	3	09521737	0.
1	1326	404	8.	6.5	1639.3	*	2	11401071	0.	6.1	1639.0	*	3	09541738	0.
1	1328	405	8.	6.5	1639.3	*	2	11421072	0.	6.1	1639.0	*	3	09561739	0.
1	1330	406	7.	6.5	1639.3	*	2	11441073	0.	6.1	1639.0	*	3	09581740	0.
1	1332	407	7.	6.5	1639.3	*	2	11461074	0.	6.1	1639.0	*	3	10001741	0.
1	1334	408	7.	6.5	1639.3	*	2	11481075	0.	6.1	1639.0	*	3	10021742	0.
1	1336	409	6.	6.4	1639.3	*	2	11501076	0.	6.1	1639.0	*	3	10041743	0.
1	1338	410	6.	6.4	1639.2	*	2	11521077	0.	6.1	1639.0	*	3	10061744	0.
1	1340	411	6.	6.4	1639.2	*	2	11541078	0.	6.1	1639.0	*	3	10081745	0.
1	1342	412	5.	6.4	1639.2	*	2	11561079	0.	6.1	1639.0	*	3	10101746	0.
1	1344	413	5.	6.4	1639.2	*	2	11581080	0.	6.1	1639.0	*	3	10121747	0.
1	1346	414	5.	6.4	1639.2	*	2	12001081	0.	6.1	1639.0	*	3	10141748	0.
1	1348	415	5.	6.4	1639.2	*	2	12021082	0.	6.1	1639.0	*	3	10161749	0.
1	1350	416	4.	6.3	1639.2	*	2	12041083	0.	6.1	1639.0	*	3	10181750	0.
1	1352	417	4.	6.3	1639.2	*	2	12061084	0.	6.1	1639.0	*	3	10201751	0.
1	1354	418	4.	6.3	1639.2	*	2	12081085	0.	6.1	1639.0	*	3	10221752	0.
1	1356	419	4.	6.3	1639.2	*	2	12101086	0.	6.1	1639.0	*	3	10241753	0.
1	1358	420	4.	6.3	1639.1	*	2	12121087	0.	6.1	1639.0	*	3	10261754	0.
1	1400	421	3.	6.3	1639.1	*	2	12141088	0.	6.1	1639.0	*	3	10281755	0.
1	1402	422	3.	6.3	1639.1	*	2	12161089	0.	6.1	1639.0	*	3	10301756	0.
1	1404	423	3.	6.3	1639.1	*	2	12181090	0.	6.1	1639.0	*	3	10321757	0.
1	1406	424	3.	6.3	1639.1	*	2	12201091	0.	6.1	1639.0	*	3	10341758	0.
1	1408	425	3.	6.3	1639.1	*	2	12221092	0.	6.1	1639.0	*	3	10361759	0.
1	1410	426	3.	6.2	1639.1	*	2	12241093	0.	6.1	1639.0	*	3	10381760	0.
1	1412	427	3.	6.2	1639.1	*	2	12261094	0.	6.1	1639.0	*	3	10401761	0.
1	1414	428	2.	6.2	1639.1	*	2	12281095	0.	6.1	1639.0	*	3	10421762	0.
1	1416	429	2.	6.2	1639.1	*	2	12301096	0.	6.1	1639.0	*	3	10441763	0.
1	1418	430	2.	6.2	1639.1	*	2	12321097	0.	6.1	1639.0	*	3	10461764	0.
1	1420	431	2.	6.2	1639.1	*	2	12341098	0.	6.1	1639.0	*	3	10481765	0.
1	1422	432	2.	6.2	1639.1	*	2	12361099	0.	6.1	1639.0	*	3	10501766	0.
1	1424	433	2.	6.2	1639.1	*	2	12381100	0.	6.1	1639.0	*	3	10521767	0.
1	1426	434	2.	6.2	1639.1	*	2	12401101	0.	6.1	1639.0	*	3	10541768	0.
1	1428	435	2.	6.2	1639.1	*	2	12421102	0.	6.1	1639.0	*	3	10561769	0.
1	1430	436	2.	6.2	1639.1	*	2	12441103	0.	6.1	1639.0	*	3	10581770	0.
1	1432	437	2.	6.2	1639.1	*	2	12461104	0.	6.1	1639.0	*	3	11001771	0.
1	1434	438	1.	6.2	1639.1	*	2	12481105	0.	6.1	1639.0	*	3	11021772	0.
1	1436	439	1.	6.2	1639.1	*	2	12501106	0.	6.1	1639.0	*	3	11041773	0.
1	1438	440	1.	6.2	1639.1	*	2	12521107	0.	6.1	1639.0	*	3	11061774	0.
1	1440	441	1.	6.2	1639.1	*	2	12541108	0.	6.1	1639.0	*	3	11081775	0.
1	1442	442	1.	6.2	1639.0	*	2	12561109	0.	6.1	1639.0	*	3	11101776	0.
1	1444	443	1.	6.2	1639.0	*	2	12581110	0.	6.1	1639.0	*	3	11121777	0.
1	1446	444	1.	6.2	1639.0	*	2	13001111	0.	6.1	1639.0	*	3	11141778	0.
1	1448	445	1.	6.2	1639.0	*	2	13021112	0.	6.1	1639.0	*	3	11161779	0.
1	1450	446	1.	6.2	1639.0	*	2	13041113	0.	6.1	1639.0	*	3	11181780	0.
1	1452	447	1.	6.2	1639.0	*	2	13061114	0.	6.1	1639.0	*	3	11201781	0.
1	1454	448	1.	6.2	1639.0	*	2	13081115	0.	6.1	1639.0	*	3	11221782	0.
1	1456	449	1.	6.1	1639.0	*	2	13101116	0.	6.1	1639.0	*	3	11241783	0.
1	1458	450	1.	6.1	1639.0	*	2	13121117	0.	6.1	1639.0	*	3	11261784	0.
1	1500	451	1.	6.1	1639.0	*	2	13141118	0.	6.1	1639.0	*	3	11281785	0.
1	1502	452	1.	6.1	1639.0	*	2	13161119	0.	6.1	1639.0	*	3	11301786	0.
1	1504	453	1.	6.1	1639.0	*	2	13181120	0.	6.1	1639.0	*	3	11321787	0.
1	1506	454	1.	6.1	1639.0	*	2	13201121	0.	6.1	1639.0	*	3	11341788	0.
1	1508	455	1.	6.1	1639.0	*	2	13221122	0.	6.1	1639.0	*	3	11361789	0.
1	1510	456	1.	6.1	1639.0	*	2	13241123	0.	6.1	1639.0	*	3	11381790	0.
1	1512	457	1.	6.1	1639.0	*	2	13261124	0.	6.1	1639.0	*	3	11401791	0.
1	1514	458	1.	6.1	1639.0	*	2	13281125	0.	6.1	1639.0	*	3	11421792	0.
1	1516	459	1.	6.1	1639.0	*	2	13301126	0.	6.1	1639.0	*	3	11441793	0.
1	1518	460	1.	6.1	1639.0	*	2	13321127	0.	6.1	1639.0	*	3	11461794	0.
1	1520	461	0.	6.1	1639.0	*	2	13341128	0.	6.1	1639.0	*	3	11481795	0.
1	1522	462	0.	6.1	1639.0	*	2	13361129	0.	6.1	1639.0	*	3	11501796	0.
1	1524	463	0.	6.1	1639.0	*	2	13381130	0.	6.1	1639.0	*	3	11521797	0.
1	1526	464	0.	6.1	1639.0	*	2	13401131	0.	6.1	1639.0	*	3	11541798	0.
1	1528	465	0.	6.1	1639.0	*	2	13421132	0.	6.1	1639.0	*	3	11561799	0.
1	1530	466	0.	6.1	1639.0	*	2	13441133	0.	6.1	1639.0	*	3	11581800	0.
1	1532	467	0.	6.1	1639.0	*	2	13461134	0.	6.1	1639.0	*	3	12001801	0.
1	1534	468	0.	6.1	1639.0	*	2	13481135	0.	6.1	1639.0	*	3	12021802	0.
1	1536	469	0.	6.1	1639.0	*	2	13501136	0.	6.1	1639.0	*	3	12041803	0.
1	1538	470	0.	6.1	1639.0	*	2	13521137	0.	6.1	1639.0	*	3	12061804	0.
1	1540	471	0.	6.1	1639.0	*	2	13541138	0.	6.1	1639.0	*	3	12081805	0.
1	1542	472	0.	6.1	1639.0	*	2	13561139	0.	6.1	1639.0	*	3	12101806	0.
1	1544	473	0.	6.1	1639.0	*	2	13581140	0.	6.1	1639.0	*	3	12121807	0.
1	1546	474	0.	6.1	1639.0	*	2	14001141	0.	6.1	1639.0	*	3	12141808	0.
1	1548	475	0.	6.1	1639.0	*	2	14021142	0.	6.1	1639.0	*	3	12161809	0.
1	1550	476	0.	6.1	1639.0	*	2	14041143	0.	6.1	1639.0	*	3	12181810	0.
1	1552	477	0.	6.1	1639.0	*	2	14061144	0.	6.1	1639.0	*	3	12201811	0.
1	1554	478	0.	6.1	1639.0	*	2	14081145	0.	6.1	1639.0	*	3	12221812	0.
1	1556	479	0.	6.1	1639.0	*	2	14101146	0.	6.1	1639.0	*	3	12241813	0.
1	1558	480	0.	6.1	1639.0	*	2	14121147	0.	6.1	1639.0	*	3	12261814	0.

1	1600	481	0.	6.1	1639.0	*	2	14141148	0.	6.1	1639.0	*	3	12281815	0.
1	1602	482	0.	6.1	1639.0	*	2	14161149	0.	6.1	1639.0	*	3	12301816	0.
1	1604	483	0.	6.1	1639.0	*	2	14181150	0.	6.1	1639.0	*	3	12321817	0.
	1606	484	0.	6.1	1639.0	*	2	14201151	0.	6.1	1639.0	*	3	12341818	0.
	1608	485	0.	6.1	1639.0	*	2	14221152	0.	6.1	1639.0	*	3	12361819	0.
	1610	486	0.	6.1	1639.0	*	2	14241153	0.	6.1	1639.0	*	3	12381820	0.
1	1612	487	0.	6.1	1639.0	*	2	14261154	0.	6.1	1639.0	*	3	12401821	0.
1	1614	488	0.	6.1	1639.0	*	2	14281155	0.	6.1	1639.0	*	3	12421822	0.
1	1616	489	0.	6.1	1639.0	*	2	14301156	0.	6.1	1639.0	*	3	12441823	0.
1	1618	490	0.	6.1	1639.0	*	2	14321157	0.	6.1	1639.0	*	3	12461824	0.
1	1620	491	0.	6.1	1639.0	*	2	14341158	0.	6.1	1639.0	*	3	12481825	0.
1	1622	492	0.	6.1	1639.0	*	2	14361159	0.	6.1	1639.0	*	3	12501826	0.
1	1624	493	0.	6.1	1639.0	*	2	14381160	0.	6.1	1639.0	*	3	12521827	0.
1	1626	494	0.	6.1	1639.0	*	2	14401161	0.	6.1	1639.0	*	3	12541828	0.
1	1628	495	0.	6.1	1639.0	*	2	14421162	0.	6.1	1639.0	*	3	12561829	0.
1	1630	496	0.	6.1	1639.0	*	2	14441163	0.	6.1	1639.0	*	3	12581830	0.
1	1632	497	0.	6.1	1639.0	*	2	14461164	0.	6.1	1639.0	*	3	13001831	0.
1	1634	498	0.	6.1	1639.0	*	2	14481165	0.	6.1	1639.0	*	3	13021832	0.
1	1636	499	0.	6.1	1639.0	*	2	14501166	0.	6.1	1639.0	*	3	13041833	0.
1	1638	500	0.	6.1	1639.0	*	2	14521167	0.	6.1	1639.0	*	3	13061834	0.
1	1640	501	0.	6.1	1639.0	*	2	14541168	0.	6.1	1639.0	*	3	13081835	0.
1	1642	502	0.	6.1	1639.0	*	2	14561169	0.	6.1	1639.0	*	3	13101836	0.
1	1644	503	0.	6.1	1639.0	*	2	14581170	0.	6.1	1639.0	*	3	13121837	0.
1	1646	504	0.	6.1	1639.0	*	2	15001171	0.	6.1	1639.0	*	3	13141838	0.
1	1648	505	0.	6.1	1639.0	*	2	15021172	0.	6.1	1639.0	*	3	13161839	0.
1	1650	506	0.	6.1	1639.0	*	2	15041173	0.	6.1	1639.0	*	3	13181840	0.
1	1652	507	0.	6.1	1639.0	*	2	15061174	0.	6.1	1639.0	*	3	13201841	0.
1	1654	508	0.	6.1	1639.0	*	2	15081175	0.	6.1	1639.0	*	3	13221842	0.
1	1656	509	0.	6.1	1639.0	*	2	15101176	0.	6.1	1639.0	*	3	13241843	0.
1	1658	510	0.	6.1	1639.0	*	2	15121177	0.	6.1	1639.0	*	3	13261844	0.
1	1700	511	0.	6.1	1639.0	*	2	15141178	0.	6.1	1639.0	*	3	13281845	0.
1	1702	512	0.	6.1	1639.0	*	2	15161179	0.	6.1	1639.0	*	3	13301846	0.
1	1704	513	0.	6.1	1639.0	*	2	15181180	0.	6.1	1639.0	*	3	13321847	0.
1	1706	514	0.	6.1	1639.0	*	2	15201181	0.	6.1	1639.0	*	3	13341848	0.
1	1708	515	0.	6.1	1639.0	*	2	15221182	0.	6.1	1639.0	*	3	13361849	0.
1	1710	516	0.	6.1	1639.0	*	2	15241183	0.	6.1	1639.0	*	3	13381850	0.
1	1712	517	0.	6.1	1639.0	*	2	15261184	0.	6.1	1639.0	*	3	13401851	0.
1	1714	518	0.	6.1	1639.0	*	2	15281185	0.	6.1	1639.0	*	3	13421852	0.
1	1716	519	0.	6.1	1639.0	*	2	15301186	0.	6.1	1639.0	*	3	13441853	0.
	1718	520	0.	6.1	1639.0	*	2	15321187	0.	6.1	1639.0	*	3	13461854	0.
	1720	521	0.	6.1	1639.0	*	2	15341188	0.	6.1	1639.0	*	3	13481855	0.
	1722	522	0.	6.1	1639.0	*	2	15361189	0.	6.1	1639.0	*	3	13501856	0.
1	1724	523	0.	6.1	1639.0	*	2	15381190	0.	6.1	1639.0	*	3	13521857	0.
1	1726	524	0.	6.1	1639.0	*	2	15401191	0.	6.1	1639.0	*	3	13541858	0.
1	1728	525	0.	6.1	1639.0	*	2	15421192	0.	6.1	1639.0	*	3	13561859	0.
1	1730	526	0.	6.1	1639.0	*	2	15441193	0.	6.1	1639.0	*	3	13581860	0.
1	1732	527	0.	6.1	1639.0	*	2	15461194	0.	6.1	1639.0	*	3	14001861	0.
1	1734	528	0.	6.1	1639.0	*	2	15481195	0.	6.1	1639.0	*	3	14021862	0.
1	1736	529	0.	6.1	1639.0	*	2	15501196	0.	6.1	1639.0	*	3	14041863	0.
1	1738	530	0.	6.1	1639.0	*	2	15521197	0.	6.1	1639.0	*	3	14061864	0.
1	1740	531	0.	6.1	1639.0	*	2	15541198	0.	6.1	1639.0	*	3	14081865	0.
1	1742	532	0.	6.1	1639.0	*	2	15561199	0.	6.1	1639.0	*	3	14101866	0.
1	1744	533	0.	6.1	1639.0	*	2	15581200	0.	6.1	1639.0	*	3	14121867	0.
1	1746	534	0.	6.1	1639.0	*	2	16001201	0.	6.1	1639.0	*	3	14141868	0.
1	1748	535	0.	6.1	1639.0	*	2	16021202	0.	6.1	1639.0	*	3	14161869	0.
1	1750	536	0.	6.1	1639.0	*	2	16041203	0.	6.1	1639.0	*	3	14181870	0.
1	1752	537	0.	6.1	1639.0	*	2	16061204	0.	6.1	1639.0	*	3	14201871	0.
1	1754	538	0.	6.1	1639.0	*	2	16081205	0.	6.1	1639.0	*	3	14221872	0.
1	1756	539	0.	6.1	1639.0	*	2	16101206	0.	6.1	1639.0	*	3	14241873	0.
1	1758	540	0.	6.1	1639.0	*	2	16121207	0.	6.1	1639.0	*	3	14261874	0.
1	1800	541	0.	6.1	1639.0	*	2	16141208	0.	6.1	1639.0	*	3	14281875	0.
1	1802	542	0.	6.1	1639.0	*	2	16161209	0.	6.1	1639.0	*	3	14301876	0.
1	1804	543	0.	6.1	1639.0	*	2	16181210	0.	6.1	1639.0	*	3	14321877	0.
1	1806	544	0.	6.1	1639.0	*	2	16201211	0.	6.1	1639.0	*	3	14341878	0.
1	1808	545	0.	6.1	1639.0	*	2	16221212	0.	6.1	1639.0	*	3	14361879	0.
1	1810	546	0.	6.1	1639.0	*	2	16241213	0.	6.1	1639.0	*	3	14381880	0.
1	1812	547	0.	6.1	1639.0	*	2	16261214	0.	6.1	1639.0	*	3	14401881	0.
1	1814	548	0.	6.1	1639.0	*	2	16281215	0.	6.1	1639.0	*	3	14421882	0.
1	1816	549	0.	6.1	1639.0	*	2	16301216	0.	6.1	1639.0	*	3	14441883	0.
1	1818	550	0.	6.1	1639.0	*	2	16321217	0.	6.1	1639.0	*	3	14461884	0.
1	1820	551	0.	6.1	1639.0	*	2	16341218	0.	6.1	1639.0	*	3	14481885	0.
1	1822	552	0.	6.1	1639.0	*	2	16361219	0.	6.1	1639.0	*	3	14501886	0.
1	1824	553	0.	6.1	1639.0	*	2	16381220	0.	6.1	1639.0	*	3	14521887	0.
1	1826	554	0.	6.1	1639.0	*	2	16401221	0.	6.1	1639.0	*	3	14541888	0.
1	1828	555	0.	6.1	1639.0	*	2	16421222	0.	6.1	1639.0	*	3	14561889	0.
	1830	556	0.	6.1	1639.0	*	2	16441223	0.	6.1	1639.0	*	3	14581890	0.
	1832	557	0.	6.1	1639.0	*	2	16461224	0.	6.1	1639.0	*	3	15001891	0.
1	1834	558	0.	6.1	1639.0	*	2	16481225	0.	6.1	1639.0	*	3	15021892	0.
1	1836	559	0.	6.1	1639.0	*	2	16501226	0.	6.1	1639.0	*	3	15041893	0.
1	1838	560	0.	6.1	1639.0	*	2	16521227	0.	6.1	1639.0	*	3	15061894	0.
1	1840	561	0.	6.1	1639.0	*	2	16541228	0.	6.1	1639.0	*	3	15081895	0.
1	1842	562	0.	6.1	1639.0	*	2	16561229	0.	6.1	1639.0	*	3	15101896	0.
1	1844	563	0.	6.1	1639.0	*	2	16581230	0.	6.1	1639.0	*	3	15121897	0.
1	1846	564	0.	6.1	1639.0	*	2	17001231	0.	6.1	1639.0	*	3	15141898	0.

1	1848	565	0.	6.1	1639.0	*	2	17021232	0.	6.1	1639.0	*	3	15161899	0.
1	1850	566	0.	6.1	1639.0	*	2	17041233	0.	6.1	1639.0	*	3	15181900	0.
1	1852	567	0.	6.1	1639.0	*	2	17061234	0.	6.1	1639.0	*	3	15201901	0.
1	1854	568	0.	6.1	1639.0	*	2	17081235	0.	6.1	1639.0	*	3	15221902	0.
1	1856	569	0.	6.1	1639.0	*	2	17101236	0.	6.1	1639.0	*	3	15241903	0.
1	1858	570	0.	6.1	1639.0	*	2	17121237	0.	6.1	1639.0	*	3	15261904	0.
1	1900	571	0.	6.1	1639.0	*	2	17141238	0.	6.1	1639.0	*	3	15281905	0.
1	1902	572	0.	6.1	1639.0	*	2	17161239	0.	6.1	1639.0	*	3	15301906	0.
1	1904	573	0.	6.1	1639.0	*	2	17181240	0.	6.1	1639.0	*	3	15321907	0.
1	1906	574	0.	6.1	1639.0	*	2	17201241	0.	6.1	1639.0	*	3	15341908	0.
1	1908	575	0.	6.1	1639.0	*	2	17221242	0.	6.1	1639.0	*	3	15361909	0.
1	1910	576	0.	6.1	1639.0	*	2	17241243	0.	6.1	1639.0	*	3	15381910	0.
1	1912	577	0.	6.1	1639.0	*	2	17261244	0.	6.1	1639.0	*	3	15401911	0.
1	1914	578	0.	6.1	1639.0	*	2	17281245	0.	6.1	1639.0	*	3	15421912	0.
1	1916	579	0.	6.1	1639.0	*	2	17301246	0.	6.1	1639.0	*	3	15441913	0.
1	1918	580	0.	6.1	1639.0	*	2	17321247	0.	6.1	1639.0	*	3	15461914	0.
1	1920	581	0.	6.1	1639.0	*	2	17341248	0.	6.1	1639.0	*	3	15481915	0.
1	1922	582	0.	6.1	1639.0	*	2	17361249	0.	6.1	1639.0	*	3	15501916	0.
1	1924	583	0.	6.1	1639.0	*	2	17381250	0.	6.1	1639.0	*	3	15521917	0.
1	1926	584	0.	6.1	1639.0	*	2	17401251	0.	6.1	1639.0	*	3	15541918	0.
1	1928	585	0.	6.1	1639.0	*	2	17421252	0.	6.1	1639.0	*	3	15561919	0.
1	1930	586	0.	6.1	1639.0	*	2	17441253	0.	6.1	1639.0	*	3	15581920	0.
1	1932	587	0.	6.1	1639.0	*	2	17461254	0.	6.1	1639.0	*	3	16001921	0.
1	1934	588	0.	6.1	1639.0	*	2	17481255	0.	6.1	1639.0	*	3	16021922	0.
1	1936	589	0.	6.1	1639.0	*	2	17501256	0.	6.1	1639.0	*	3	16041923	0.
1	1938	590	0.	6.1	1639.0	*	2	17521257	0.	6.1	1639.0	*	3	16061924	0.
1	1940	591	0.	6.1	1639.0	*	2	17541258	0.	6.1	1639.0	*	3	16081925	0.
1	1942	592	0.	6.1	1639.0	*	2	17561259	0.	6.1	1639.0	*	3	16101926	0.
1	1944	593	0.	6.1	1639.0	*	2	17581260	0.	6.1	1639.0	*	3	16121927	0.
1	1946	594	0.	6.1	1639.0	*	2	18001261	0.	6.1	1639.0	*	3	16141928	0.
1	1948	595	0.	6.1	1639.0	*	2	18021262	0.	6.1	1639.0	*	3	16161929	0.
1	1950	596	0.	6.1	1639.0	*	2	18041263	0.	6.1	1639.0	*	3	16181930	0.
1	1952	597	0.	6.1	1639.0	*	2	18061264	0.	6.1	1639.0	*	3	16201931	0.
1	1954	598	0.	6.1	1639.0	*	2	18081265	0.	6.1	1639.0	*	3	16221932	0.
1	1956	599	0.	6.1	1639.0	*	2	18101266	0.	6.1	1639.0	*	3	16241933	0.
1	1958	600	0.	6.1	1639.0	*	2	18121267	0.	6.1	1639.0	*	3	16261934	0.
1	2000	601	0.	6.1	1639.0	*	2	18141268	0.	6.1	1639.0	*	3	16281935	0.
1	2002	602	0.	6.1	1639.0	*	2	18161269	0.	6.1	1639.0	*	3	16301936	0.
1	2004	603	0.	6.1	1639.0	*	2	18181270	0.	6.1	1639.0	*	3	16321937	0.
1	2006	604	0.	6.1	1639.0	*	2	18201271	0.	6.1	1639.0	*	3	16341938	0.
1	2008	605	0.	6.1	1639.0	*	2	18221272	0.	6.1	1639.0	*	3	16361939	0.
1	2010	606	0.	6.1	1639.0	*	2	18241273	0.	6.1	1639.0	*	3	16381940	0.
1	2012	607	0.	6.1	1639.0	*	2	18261274	0.	6.1	1639.0	*	3	16401941	0.
1	2014	608	0.	6.1	1639.0	*	2	18281275	0.	6.1	1639.0	*	3	16421942	0.
1	2016	609	0.	6.1	1639.0	*	2	18301276	0.	6.1	1639.0	*	3	16441943	0.
1	2018	610	0.	6.1	1639.0	*	2	18321277	0.	6.1	1639.0	*	3	16461944	0.
1	2020	611	0.	6.1	1639.0	*	2	18341278	0.	6.1	1639.0	*	3	16481945	0.
1	2022	612	0.	6.1	1639.0	*	2	18361279	0.	6.1	1639.0	*	3	16501946	0.
1	2024	613	0.	6.1	1639.0	*	2	18381280	0.	6.1	1639.0	*	3	16521947	0.
1	2026	614	0.	6.1	1639.0	*	2	18401281	0.	6.1	1639.0	*	3	16541948	0.
1	2028	615	0.	6.1	1639.0	*	2	18421282	0.	6.1	1639.0	*	3	16561949	0.
1	2030	616	0.	6.1	1639.0	*	2	18441283	0.	6.1	1639.0	*	3	16581950	0.
1	2032	617	0.	6.1	1639.0	*	2	18461284	0.	6.1	1639.0	*	3	17001951	0.
1	2034	618	0.	6.1	1639.0	*	2	18481285	0.	6.1	1639.0	*	3	17021952	0.
1	2036	619	0.	6.1	1639.0	*	2	18501286	0.	6.1	1639.0	*	3	17041953	0.
1	2038	620	0.	6.1	1639.0	*	2	18521287	0.	6.1	1639.0	*	3	17061954	0.
1	2040	621	0.	6.1	1639.0	*	2	18541288	0.	6.1	1639.0	*	3	17081955	0.
1	2042	622	0.	6.1	1639.0	*	2	18561289	0.	6.1	1639.0	*	3	17101956	0.
1	2044	623	0.	6.1	1639.0	*	2	18581290	0.	6.1	1639.0	*	3	17121957	0.
1	2046	624	0.	6.1	1639.0	*	2	19001291	0.	6.1	1639.0	*	3	17141958	0.
1	2048	625	0.	6.1	1639.0	*	2	19021292	0.	6.1	1639.0	*	3	17161959	0.
1	2050	626	0.	6.1	1639.0	*	2	19041293	0.	6.1	1639.0	*	3	17181960	0.
1	2052	627	0.	6.1	1639.0	*	2	19061294	0.	6.1	1639.0	*	3	17201961	0.
1	2054	628	0.	6.1	1639.0	*	2	19081295	0.	6.1	1639.0	*	3	17221962	0.
1	2056	629	0.	6.1	1639.0	*	2	19101296	0.	6.1	1639.0	*	3	17241963	0.
1	2058	630	0.	6.1	1639.0	*	2	19121297	0.	6.1	1639.0	*	3	17261964	0.
1	2100	631	0.	6.1	1639.0	*	2	19141298	0.	6.1	1639.0	*	3	17281965	0.
1	2102	632	0.	6.1	1639.0	*	2	19161299	0.	6.1	1639.0	*	3	17301966	0.
1	2104	633	0.	6.1	1639.0	*	2	19181300	0.	6.1	1639.0	*	3	17321967	0.
1	2106	634	0.	6.1	1639.0	*	2	19201301	0.	6.1	1639.0	*	3	17341968	0.
1	2108	635	0.	6.1	1639.0	*	2	19221302	0.	6.1	1639.0	*	3	17361969	0.
1	2110	636	0.	6.1	1639.0	*	2	19241303	0.	6.1	1639.0	*	3	17381970	0.
1	2112	637	0.	6.1	1639.0	*	2	19261304	0.	6.1	1639.0	*	3	17401971	0.
1	2114	638	0.	6.1	1639.0	*	2	19281305	0.	6.1	1639.0	*	3	17421972	0.
1	2116	639	0.	6.1	1639.0	*	2	19301306	0.	6.1	1639.0	*	3	17441973	0.
1	2118	640	0.	6.1	1639.0	*	2	19321307	0.	6.1	1639.0	*	3	17461974	0.
1	2120	641	0.	6.1	1639.0	*	2	19341308	0.	6.1	1639.0	*	3	17481975	0.
1	2122	642	0.	6.1	1639.0	*	2	19361309	0.	6.1	1639.0	*	3	17501976	0.
1	2124	643	0.	6.1	1639.0	*	2	19381310	0.	6.1	1639.0	*	3	17521977	0.
1	2126	644	0.	6.1	1639.0	*	2	19401311	0.	6.1	1639.0	*	3	17541978	0.
1	2128	645	0.	6.1	1639.0	*	2	19421312	0.	6.1	1639.0	*	3	17561979	0.
1	2130	646	0.	6.1	1639.0	*	2	19441313	0.	6.1	1639.0	*	3	17581980	0.
1	2132	647	0.	6.1	1639.0	*	2	19461314	0.	6.1	1639.0	*	3	18001981	0.
1	2134	648	0.	6.1	1639.0	*	2	19481315	0.	6.1	1639.0	*	3	18021982	0.

1	2136	649	0.	6.1	1639.0	*	2	19501316	0.	6.1	1639.0	*	3	18041983	0.
1	2138	650	0.	6.1	1639.0	*	2	19521317	0.	6.1	1639.0	*	3	18061984	0.
1	2140	651	0.	6.1	1639.0	*	2	19541318	0.	6.1	1639.0	*	3	18081985	0.
1	2142	652	0.	6.1	1639.0	*	2	19561319	0.	6.1	1639.0	*	3	18101986	0.
	2144	653	0.	6.1	1639.0	*	2	19581320	0.	6.1	1639.0	*	3	18121987	0.
	2146	654	0.	6.1	1639.0	*	2	20001321	0.	6.1	1639.0	*	3	18141988	0.
1	2148	655	0.	6.1	1639.0	*	2	20021322	0.	6.1	1639.0	*	3	18161989	0.
1	2150	656	0.	6.1	1639.0	*	2	20041323	0.	6.1	1639.0	*	3	18181990	0.
1	2152	657	0.	6.1	1639.0	*	2	20061324	0.	6.1	1639.0	*	3	18201991	0.
1	2154	658	0.	6.1	1639.0	*	2	20081325	0.	6.1	1639.0	*	3	18221992	0.
1	2156	659	0.	6.1	1639.0	*	2	20101326	0.	6.1	1639.0	*	3	18241993	0.
1	2158	660	0.	6.1	1639.0	*	2	20121327	0.	6.1	1639.0	*	3	18261994	0.
1	2200	661	0.	6.1	1639.0	*	2	20141328	0.	6.1	1639.0	*	3	18281995	0.
1	2202	662	0.	6.1	1639.0	*	2	20161329	0.	6.1	1639.0	*	3	18301996	0.
1	2204	663	0.	6.1	1639.0	*	2	20181330	0.	6.1	1639.0	*	3	18321997	0.
1	2206	664	0.	6.1	1639.0	*	2	20201331	0.	6.1	1639.0	*	3	18341998	0.
1	2208	665	0.	6.1	1639.0	*	2	20221332	0.	6.1	1639.0	*	3	18361999	0.
1	2210	666	0.	6.1	1639.0	*	2	20241333	0.	6.1	1639.0	*	3	18382000	0.
1	2212	667	0.	6.1	1639.0	*	2	20261334	0.	6.1	1639.0	*			
						*						*			

****

PEAK FLOW	TIME		MAXIMUM AVERAGE FLOW 6-HR	24-HR	72-HR	66.63-HR
+ (CFS)	(HR)					
		(CFS)				
+ 79.	12.53		5.	1.	0.	0.
		(INCHES)	.031	.031	.031	.031
		(AC-FT)	3.	3.	3.	3.

PEAK STORAGE	TIME	MAXIMUM AVERAGE STORAGE 6-HR	24-HR	72-HR	66.63-HR
+ (AC-FT)	(HR)				
8.	12.53	6.	6.	5.	5.

PEAK STAGE	TIME	MAXIMUM AVERAGE STAGE 6-HR	24-HR	72-HR	66.63-HR
+ (FEET)	(HR)				
1640.27	12.53	1639.17	1639.04	1637.38	1637.38

CUMULATIVE AREA = 1.59 SQ MI

****

HYDROGRAPH AT SMCDB
TRANSPOSITION AREA 50.0 SQ MI

****

DA	MON	HRMN	ORD	OUTFLOW	STORAGE	STAGE	*	DA	MON	HRMN	ORD	OUTFLOW	STORAGE	STAGE	*	DA	MON	HRMN	ORD	OUTFLOW	STOR
1		0000	1	0.	.0	1630.0	*	1		2214	668	0.	6.1	1639.0	*	2		20281335		0.	
1		0002	2	0.	.0	1630.0	*	1		2216	669	0.	6.1	1639.0	*	2		20301336		0.	
1		0004	3	0.	.0	1630.0	*	1		2218	670	0.	6.1	1639.0	*	2		20321337		0.	
1		0006	4	0.	.0	1630.0	*	1		2220	671	0.	6.1	1639.0	*	2		20341338		0.	
1		0008	5	0.	.0	1630.0	*	1		2222	672	0.	6.1	1639.0	*	2		20361339		0.	
1		0010	6	0.	.0	1630.0	*	1		2224	673	0.	6.1	1639.0	*	2		20381340		0.	
1		0012	7	0.	.0	1630.0	*	1		2226	674	0.	6.1	1639.0	*	2		20401341		0.	
1		0014	8	0.	.0	1630.0	*	1		2228	675	0.	6.1	1639.0	*	2		20421342		0.	
1		0016	9	0.	.0	1630.0	*	1		2230	676	0.	6.1	1639.0	*	2		20441343		0.	
1		0018	10	0.	.0	1630.0	*	1		2232	677	0.	6.1	1639.0	*	2		20461344		0.	
1		0020	11	0.	.0	1630.0	*	1		2234	678	0.	6.1	1639.0	*	2		20481345		0.	
1		0022	12	0.	.0	1630.0	*	1		2236	679	0.	6.1	1639.0	*	2		20501346		0.	
1		0024	13	0.	.0	1630.0	*	1		2238	680	0.	6.1	1639.0	*	2		20521347		0.	
1		0026	14	0.	.0	1630.0	*	1		2240	681	0.	6.1	1639.0	*	2		20541348		0.	
1		0028	15	0.	.0	1630.0	*	1		2242	682	0.	6.1	1639.0	*	2		20561349		0.	
1		0030	16	0.	.0	1630.0	*	1		2244	683	0.	6.1	1639.0	*	2		20581350		0.	
1		0032	17	0.	.0	1630.0	*	1		2246	684	0.	6.1	1639.0	*	2		21001351		0.	
1		0034	18	0.	.0	1630.0	*	1		2248	685	0.	6.1	1639.0	*	2		21021352		0.	
1		0036	19	0.	.0	1630.0	*	1		2250	686	0.	6.1	1639.0	*	2		21041353		0.	
1		0038	20	0.	.0	1630.0	*	1		2252	687	0.	6.1	1639.0	*	2		21061354		0.	
1		0040	21	0.	.0	1630.0	*	1		2254	688	0.	6.1	1639.0	*	2		21081355		0.	
1		0042	22	0.	.0	1630.0	*	1		2256	689	0.	6.1	1639.0	*	2		21101356		0.	
1		0044	23	0.	.0	1630.0	*	1		2258	690	0.	6.1	1639.0	*	2		21121357		0.	
		0046	24	0.	.0	1630.0	*	1		2300	691	0.	6.1	1639.0	*	2		21141358		0.	
		0048	25	0.	.0	1630.0	*	1		2302	692	0.	6.1	1639.0	*	2		21161359		0.	
		0050	26	0.	.0	1630.0	*	1		2304	693	0.	6.1	1639.0	*	2		21181360		0.	
1		0052	27	0.	.0	1630.0	*	1		2306	694	0.	6.1	1639.0	*	2		21201361		0.	
1		0054	28	0.	.0	1630.0	*	1		2308	695	0.	6.1	1639.0	*	2		21221362		0.	
1		0056	29	0.	.0	1630.0	*	1		2310	696	0.	6.1	1639.0	*	2		21241363		0.	
1		0058	30	0.	.0	1630.0	*	1		2312	697	0.	6.1	1639.0	*	2		21261364		0.	
1		0100	31	0.	.0	1630.0	*	1		2314	698	0.	6.1	1639.0	*	2		21281365		0.	
1		0102	32	0.	.0	1630.0	*	1		2316	699	0.	6.1	1639.0	*	2		21301366		0.	

1	0104	33	0.	.0	1630.0	*	1	2318	700	0.	6.1	1639.0	*	2	21321367	0.
1	0106	34	0.	.0	1630.0	*	1	2320	701	0.	6.1	1639.0	*	2	21341368	0.
1	0108	35	0.	.0	1630.0	*	1	2322	702	0.	6.1	1639.0	*	2	21361369	0.
1	0110	36	0.	.0	1630.0	*	1	2324	703	0.	6.1	1639.0	*	2	21381370	0.
1	0112	37	0.	.0	1630.0	*	1	2326	704	0.	6.1	1639.0	*	2	21401371	0.
1	0114	38	0.	.0	1630.0	*	1	2328	705	0.	6.1	1639.0	*	2	21421372	0.
1	0116	39	0.	.0	1630.0	*	1	2330	706	0.	6.1	1639.0	*	2	21441373	0.
1	0118	40	0.	.0	1630.0	*	1	2332	707	0.	6.1	1639.0	*	2	21461374	0.
1	0120	41	0.	.0	1630.0	*	1	2334	708	0.	6.1	1639.0	*	2	21481375	0.
1	0122	42	0.	.0	1630.0	*	1	2336	709	0.	6.1	1639.0	*	2	21501376	0.
1	0124	43	0.	.0	1630.0	*	1	2338	710	0.	6.1	1639.0	*	2	21521377	0.
1	0126	44	0.	.0	1630.0	*	1	2340	711	0.	6.1	1639.0	*	2	21541378	0.
1	0128	45	0.	.0	1630.0	*	1	2342	712	0.	6.1	1639.0	*	2	21561379	0.
1	0130	46	0.	.0	1630.0	*	1	2344	713	0.	6.1	1639.0	*	2	21581380	0.
1	0132	47	0.	.0	1630.0	*	1	2346	714	0.	6.1	1639.0	*	2	22001381	0.
1	0134	48	0.	.0	1630.0	*	1	2348	715	0.	6.1	1639.0	*	2	22021382	0.
1	0136	49	0.	.0	1630.0	*	1	2350	716	0.	6.1	1639.0	*	2	22041383	0.
1	0138	50	0.	.0	1630.0	*	1	2352	717	0.	6.1	1639.0	*	2	22061384	0.
1	0140	51	0.	.0	1630.0	*	1	2354	718	0.	6.1	1639.0	*	2	22081385	0.
1	0142	52	0.	.0	1630.0	*	1	2356	719	0.	6.1	1639.0	*	2	22101386	0.
1	0144	53	0.	.0	1630.0	*	1	2358	720	0.	6.1	1639.0	*	2	22121387	0.
1	0146	54	0.	.0	1630.0	*	2	0000	721	0.	6.1	1639.0	*	2	22141388	0.
1	0148	55	0.	.0	1630.0	*	2	0002	722	0.	6.1	1639.0	*	2	22161389	0.
1	0150	56	0.	.0	1630.0	*	2	0004	723	0.	6.1	1639.0	*	2	22181390	0.
1	0152	57	0.	.0	1630.0	*	2	0006	724	0.	6.1	1639.0	*	2	22201391	0.
1	0154	58	0.	.0	1630.0	*	2	0008	725	0.	6.1	1639.0	*	2	22221392	0.
1	0156	59	0.	.0	1630.0	*	2	0010	726	0.	6.1	1639.0	*	2	22241393	0.
1	0158	60	0.	.0	1630.0	*	2	0012	727	0.	6.1	1639.0	*	2	22261394	0.
1	0200	61	0.	.0	1630.0	*	2	0014	728	0.	6.1	1639.0	*	2	22281395	0.
1	0202	62	0.	.0	1630.0	*	2	0016	729	0.	6.1	1639.0	*	2	22301396	0.
1	0204	63	0.	.0	1630.0	*	2	0018	730	0.	6.1	1639.0	*	2	22321397	0.
1	0206	64	0.	.0	1630.0	*	2	0020	731	0.	6.1	1639.0	*	2	22341398	0.
1	0208	65	0.	.0	1630.0	*	2	0022	732	0.	6.1	1639.0	*	2	22361399	0.
1	0210	66	0.	.0	1630.0	*	2	0024	733	0.	6.1	1639.0	*	2	22381400	0.
1	0212	67	0.	.0	1630.0	*	2	0026	734	0.	6.1	1639.0	*	2	22401401	0.
1	0214	68	0.	.0	1630.0	*	2	0028	735	0.	6.1	1639.0	*	2	22421402	0.
1	0216	69	0.	.0	1630.0	*	2	0030	736	0.	6.1	1639.0	*	2	22441403	0.
1	0218	70	0.	.0	1630.0	*	2	0032	737	0.	6.1	1639.0	*	2	22461404	0.
1	0220	71	0.	.0	1630.0	*	2	0034	738	0.	6.1	1639.0	*	2	22481405	0.
1	0222	72	0.	.0	1630.0	*	2	0036	739	0.	6.1	1639.0	*	2	22501406	0.
1	0224	73	0.	.0	1630.0	*	2	0038	740	0.	6.1	1639.0	*	2	22521407	0.
1	0226	74	0.	.0	1630.0	*	2	0040	741	0.	6.1	1639.0	*	2	22541408	0.
1	0228	75	0.	.0	1630.0	*	2	0042	742	0.	6.1	1639.0	*	2	22561409	0.
1	0230	76	0.	.0	1630.0	*	2	0044	743	0.	6.1	1639.0	*	2	22581410	0.
1	0232	77	0.	.0	1630.0	*	2	0046	744	0.	6.1	1639.0	*	2	23001411	0.
1	0234	78	0.	.0	1630.0	*	2	0048	745	0.	6.1	1639.0	*	2	23021412	0.
1	0236	79	0.	.0	1630.0	*	2	0050	746	0.	6.1	1639.0	*	2	23041413	0.
1	0238	80	0.	.0	1630.0	*	2	0052	747	0.	6.1	1639.0	*	2	23061414	0.
1	0240	81	0.	.0	1630.0	*	2	0054	748	0.	6.1	1639.0	*	2	23081415	0.
1	0242	82	0.	.0	1630.0	*	2	0056	749	0.	6.1	1639.0	*	2	23101416	0.
1	0244	83	0.	.0	1630.0	*	2	0058	750	0.	6.1	1639.0	*	2	23121417	0.
1	0246	84	0.	.0	1630.0	*	2	0100	751	0.	6.1	1639.0	*	2	23141418	0.
1	0248	85	0.	.0	1630.0	*	2	0102	752	0.	6.1	1639.0	*	2	23161419	0.
1	0250	86	0.	.0	1630.0	*	2	0104	753	0.	6.1	1639.0	*	2	23181420	0.
1	0252	87	0.	.0	1630.0	*	2	0106	754	0.	6.1	1639.0	*	2	23201421	0.
1	0254	88	0.	.0	1630.0	*	2	0108	755	0.	6.1	1639.0	*	2	23221422	0.
1	0256	89	0.	.0	1630.0	*	2	0110	756	0.	6.1	1639.0	*	2	23241423	0.
1	0258	90	0.	.0	1630.0	*	2	0112	757	0.	6.1	1639.0	*	2	23261424	0.
1	0300	91	0.	.0	1630.0	*	2	0114	758	0.	6.1	1639.0	*	2	23281425	0.
1	0302	92	0.	.0	1630.0	*	2	0116	759	0.	6.1	1639.0	*	2	23301426	0.
1	0304	93	0.	.0	1630.0	*	2	0118	760	0.	6.1	1639.0	*	2	23321427	0.
1	0306	94	0.	.0	1630.0	*	2	0120	761	0.	6.1	1639.0	*	2	23341428	0.
1	0308	95	0.	.0	1630.0	*	2	0122	762	0.	6.1	1639.0	*	2	23361429	0.
1	0310	96	0.	.0	1630.0	*	2	0124	763	0.	6.1	1639.0	*	2	23381430	0.
1	0312	97	0.	.0	1630.0	*	2	0126	764	0.	6.1	1639.0	*	2	23401431	0.
1	0314	98	0.	.0	1630.0	*	2	0128	765	0.	6.1	1639.0	*	2	23421432	0.
1	0316	99	0.	.0	1630.0	*	2	0130	766	0.	6.1	1639.0	*	2	23441433	0.
1	0318	100	0.	.0	1630.0	*	2	0132	767	0.	6.1	1639.0	*	2	23461434	0.
1	0320	101	0.	.0	1630.0	*	2	0134	768	0.	6.1	1639.0	*	2	23481435	0.
1	0322	102	0.	.0	1630.0	*	2	0136	769	0.	6.1	1639.0	*	2	23501436	0.
1	0324	103	0.	.0	1630.0	*	2	0138	770	0.	6.1	1639.0	*	2	23521437	0.
1	0326	104	0.	.0	1630.0	*	2	0140	771	0.	6.1	1639.0	*	2	23541438	0.
1	0328	105	0.	.0	1630.0	*	2	0142	772	0.	6.1	1639.0	*	2	23561439	0.
1	0330	106	0.	.0	1630.0	*	2	0144	773	0.	6.1	1639.0	*	2	23581440	0.
1	0332	107	0.	.0	1630.0	*	2	0146	774	0.	6.1	1639.0	*	3	00001441	0.
1	0334	108	0.	.0	1630.0	*	2	0148	775	0.	6.1	1639.0	*	3	00021442	0.
1	0336	109	0.	.0	1630.0	*	2	0150	776	0.	6.1	1639.0	*	3	00041443	0.
1	0338	110	0.	.0	1630.0	*	2	0152	777	0.	6.1	1639.0	*	3	00061444	0.
1	0340	111	0.	.0	1630.0	*	2	0154	778	0.	6.1	1639.0	*	3	00081445	0.
1	0342	112	0.	.0	1630.0	*	2	0156	779	0.	6.1	1639.0	*	3	00101446	0.
1	0344	113	0.	.0	1630.0	*	2	0158	780	0.	6.1	1639.0	*	3	00121447	0.
1	0346	114	0.	.0	1630.0	*	2	0200	781	0.	6.1	1639.0	*	3	00141448	0.
1	0348	115	0.	.0	1630.0	*	2	0202	782	0.	6.1	1639.0	*	3	00161449	0.
1	0350	116	0.	.0	1630.0	*	2	0204	783	0.	6.1	1639.0	*	3	00181450	0.

1	0352	117	0.	.0	1630.0	*	2	0206	784	0.	6.1	1639.0	*	3	00201451	0.
1	0354	118	0.	.0	1630.0	*	2	0208	785	0.	6.1	1639.0	*	3	00221452	0.
1	0356	119	0.	.0	1630.0	*	2	0210	786	0.	6.1	1639.0	*	3	00241453	0.
1	0358	120	0.	.0	1630.0	*	2	0212	787	0.	6.1	1639.0	*	3	00261454	0.
	0400	121	0.	.0	1630.0	*	2	0214	788	0.	6.1	1639.0	*	3	00281455	0.
	0402	122	0.	.0	1630.0	*	2	0216	789	0.	6.1	1639.0	*	3	00301456	0.
1	0404	123	0.	.0	1630.0	*	2	0218	790	0.	6.1	1639.0	*	3	00321457	0.
1	0406	124	0.	.0	1630.0	*	2	0220	791	0.	6.1	1639.0	*	3	00341458	0.
1	0408	125	0.	.0	1630.0	*	2	0222	792	0.	6.1	1639.0	*	3	00361459	0.
1	0410	126	0.	.0	1630.0	*	2	0224	793	0.	6.1	1639.0	*	3	00381460	0.
1	0412	127	0.	.0	1630.0	*	2	0226	794	0.	6.1	1639.0	*	3	00401461	0.
1	0414	128	0.	.0	1630.0	*	2	0228	795	0.	6.1	1639.0	*	3	00421462	0.
1	0416	129	0.	.0	1630.0	*	2	0230	796	0.	6.1	1639.0	*	3	00441463	0.
1	0418	130	0.	.0	1630.0	*	2	0232	797	0.	6.1	1639.0	*	3	00461464	0.
1	0420	131	0.	.0	1630.0	*	2	0234	798	0.	6.1	1639.0	*	3	00481465	0.
1	0422	132	0.	.0	1630.0	*	2	0236	799	0.	6.1	1639.0	*	3	00501466	0.
1	0424	133	0.	.0	1630.0	*	2	0238	800	0.	6.1	1639.0	*	3	00521467	0.
1	0426	134	0.	.0	1630.0	*	2	0240	801	0.	6.1	1639.0	*	3	00541468	0.
1	0428	135	0.	.0	1630.0	*	2	0242	802	0.	6.1	1639.0	*	3	00561469	0.
1	0430	136	0.	.0	1630.0	*	2	0244	803	0.	6.1	1639.0	*	3	00581470	0.
1	0432	137	0.	.0	1630.0	*	2	0246	804	0.	6.1	1639.0	*	3	01001471	0.
1	0434	138	0.	.0	1630.0	*	2	0248	805	0.	6.1	1639.0	*	3	01021472	0.
1	0436	139	0.	.0	1630.0	*	2	0250	806	0.	6.1	1639.0	*	3	01041473	0.
1	0438	140	0.	.0	1630.0	*	2	0252	807	0.	6.1	1639.0	*	3	01061474	0.
1	0440	141	0.	.0	1630.0	*	2	0254	808	0.	6.1	1639.0	*	3	01081475	0.
1	0442	142	0.	.0	1630.0	*	2	0256	809	0.	6.1	1639.0	*	3	01101476	0.
1	0444	143	0.	.0	1630.0	*	2	0258	810	0.	6.1	1639.0	*	3	01121477	0.
1	0446	144	0.	.0	1630.0	*	2	0300	811	0.	6.1	1639.0	*	3	01141478	0.
1	0448	145	0.	.0	1630.0	*	2	0302	812	0.	6.1	1639.0	*	3	01161479	0.
1	0450	146	0.	.0	1630.0	*	2	0304	813	0.	6.1	1639.0	*	3	01181480	0.
1	0452	147	0.	.0	1630.0	*	2	0306	814	0.	6.1	1639.0	*	3	01201481	0.
1	0454	148	0.	.0	1630.0	*	2	0308	815	0.	6.1	1639.0	*	3	01221482	0.
1	0456	149	0.	.0	1630.0	*	2	0310	816	0.	6.1	1639.0	*	3	01241483	0.
1	0458	150	0.	.0	1630.0	*	2	0312	817	0.	6.1	1639.0	*	3	01261484	0.
1	0500	151	0.	.0	1630.0	*	2	0314	818	0.	6.1	1639.0	*	3	01281485	0.
1	0502	152	0.	.0	1630.0	*	2	0316	819	0.	6.1	1639.0	*	3	01301486	0.
1	0504	153	0.	.0	1630.0	*	2	0318	820	0.	6.1	1639.0	*	3	01321487	0.
1	0506	154	0.	.0	1630.0	*	2	0320	821	0.	6.1	1639.0	*	3	01341488	0.
1	0508	155	0.	.0	1630.0	*	2	0322	822	0.	6.1	1639.0	*	3	01361489	0.
	0510	156	0.	.0	1630.0	*	2	0324	823	0.	6.1	1639.0	*	3	01381490	0.
	0512	157	0.	.0	1630.0	*	2	0326	824	0.	6.1	1639.0	*	3	01401491	0.
	0514	158	0.	.0	1630.0	*	2	0328	825	0.	6.1	1639.0	*	3	01421492	0.
1	0516	159	0.	.0	1630.0	*	2	0330	826	0.	6.1	1639.0	*	3	01441493	0.
1	0518	160	0.	.0	1630.0	*	2	0332	827	0.	6.1	1639.0	*	3	01461494	0.
1	0520	161	0.	.0	1630.0	*	2	0334	828	0.	6.1	1639.0	*	3	01481495	0.
1	0522	162	0.	.0	1630.0	*	2	0336	829	0.	6.1	1639.0	*	3	01501496	0.
1	0524	163	0.	.0	1630.0	*	2	0338	830	0.	6.1	1639.0	*	3	01521497	0.
1	0526	164	0.	.0	1630.0	*	2	0340	831	0.	6.1	1639.0	*	3	01541498	0.
1	0528	165	0.	.0	1630.0	*	2	0342	832	0.	6.1	1639.0	*	3	01561499	0.
1	0530	166	0.	.0	1630.0	*	2	0344	833	0.	6.1	1639.0	*	3	01581500	0.
1	0532	167	0.	.0	1630.0	*	2	0346	834	0.	6.1	1639.0	*	3	02001501	0.
1	0534	168	0.	.0	1630.0	*	2	0348	835	0.	6.1	1639.0	*	3	02021502	0.
1	0536	169	0.	.0	1630.0	*	2	0350	836	0.	6.1	1639.0	*	3	02041503	0.
1	0538	170	0.	.0	1630.0	*	2	0352	837	0.	6.1	1639.0	*	3	02061504	0.
1	0540	171	0.	.0	1630.0	*	2	0354	838	0.	6.1	1639.0	*	3	02081505	0.
1	0542	172	0.	.0	1630.0	*	2	0356	839	0.	6.1	1639.0	*	3	02101506	0.
1	0544	173	0.	.0	1630.0	*	2	0358	840	0.	6.1	1639.0	*	3	02121507	0.
1	0546	174	0.	.0	1630.0	*	2	0400	841	0.	6.1	1639.0	*	3	02141508	0.
1	0548	175	0.	.0	1630.0	*	2	0402	842	0.	6.1	1639.0	*	3	02161509	0.
1	0550	176	0.	.0	1630.0	*	2	0404	843	0.	6.1	1639.0	*	3	02181510	0.
1	0552	177	0.	.0	1630.0	*	2	0406	844	0.	6.1	1639.0	*	3	02201511	0.
1	0554	178	0.	.0	1630.0	*	2	0408	845	0.	6.1	1639.0	*	3	02221512	0.
1	0556	179	0.	.0	1630.0	*	2	0410	846	0.	6.1	1639.0	*	3	02241513	0.
1	0558	180	0.	.0	1630.0	*	2	0412	847	0.	6.1	1639.0	*	3	02261514	0.
1	0600	181	0.	.0	1630.0	*	2	0414	848	0.	6.1	1639.0	*	3	02281515	0.
1	0602	182	0.	.0	1630.0	*	2	0416	849	0.	6.1	1639.0	*	3	02301516	0.
1	0604	183	0.	.0	1630.0	*	2	0418	850	0.	6.1	1639.0	*	3	02321517	0.
1	0606	184	0.	.0	1630.0	*	2	0420	851	0.	6.1	1639.0	*	3	02341518	0.
1	0608	185	0.	.0	1630.0	*	2	0422	852	0.	6.1	1639.0	*	3	02361519	0.
1	0610	186	0.	.0	1630.0	*	2	0424	853	0.	6.1	1639.0	*	3	02381520	0.
1	0612	187	0.	.0	1630.0	*	2	0426	854	0.	6.1	1639.0	*	3	02401521	0.
1	0614	188	0.	.0	1630.0	*	2	0428	855	0.	6.1	1639.0	*	3	02421522	0.
1	0616	189	0.	.0	1630.0	*	2	0430	856	0.	6.1	1639.0	*	3	02441523	0.
1	0618	190	0.	.0	1630.0	*	2	0432	857	0.	6.1	1639.0	*	3	02461524	0.
1	0620	191	0.	.0	1630.0	*	2	0434	858	0.	6.1	1639.0	*	3	02481525	0.
	0622	192	0.	.0	1630.0	*	2	0436	859	0.	6.1	1639.0	*	3	02501526	0.
	0624	193	0.	.0	1630.0	*	2	0438	860	0.	6.1	1639.0	*	3	02521527	0.
	0626	194	0.	.0	1630.0	*	2	0440	861	0.	6.1	1639.0	*	3	02541528	0.
1	0628	195	0.	.0	1630.0	*	2	0442	862	0.	6.1	1639.0	*	3	02561529	0.
1	0630	196	0.	.0	1630.0	*	2	0444	863	0.	6.1	1639.0	*	3	02581530	0.
1	0632	197	0.	.0	1630.0	*	2	0446	864	0.	6.1	1639.0	*	3	03001531	0.
1	0634	198	0.	.0	1630.0	*	2	0448	865	0.	6.1	1639.0	*	3	03021532	0.
1	0636	199	0.	.0	1630.0	*	2	0450	866	0.	6.1	1639.0	*	3	03041533	0.
1	0638	200	0.	.0	1630.0	*	2	0452	867	0.	6.1	1639.0	*	3	03061534	0.

1	0640	201	0.	.0	1630.0	*	2	0454	868	0.	6.1	1639.0	*	3	03081535	0.
1	0642	202	0.	.0	1630.0	*	2	0456	869	0.	6.1	1639.0	*	3	03101536	0.
1	0644	203	0.	.0	1630.0	*	2	0458	870	0.	6.1	1639.0	*	3	03121537	0.
1	0646	204	0.	.0	1630.0	*	2	0500	871	0.	6.1	1639.0	*	3	03141538	0.
1	0648	205	0.	.0	1630.0	*	2	0502	872	0.	6.1	1639.0	*	3	03161539	0.
1	0650	206	0.	.0	1630.0	*	2	0504	873	0.	6.1	1639.0	*	3	03181540	0.
1	0652	207	0.	.0	1630.0	*	2	0506	874	0.	6.1	1639.0	*	3	03201541	0.
1	0654	208	0.	.0	1630.0	*	2	0508	875	0.	6.1	1639.0	*	3	03221542	0.
1	0656	209	0.	.0	1630.0	*	2	0510	876	0.	6.1	1639.0	*	3	03241543	0.
1	0658	210	0.	.0	1630.0	*	2	0512	877	0.	6.1	1639.0	*	3	03261544	0.
1	0700	211	0.	.0	1630.0	*	2	0514	878	0.	6.1	1639.0	*	3	03281545	0.
1	0702	212	0.	.0	1630.0	*	2	0516	879	0.	6.1	1639.0	*	3	03301546	0.
1	0704	213	0.	.0	1630.0	*	2	0518	880	0.	6.1	1639.0	*	3	03321547	0.
1	0706	214	0.	.0	1630.0	*	2	0520	881	0.	6.1	1639.0	*	3	03341548	0.
1	0708	215	0.	.0	1630.0	*	2	0522	882	0.	6.1	1639.0	*	3	03361549	0.
1	0710	216	0.	.0	1630.0	*	2	0524	883	0.	6.1	1639.0	*	3	03381550	0.
1	0712	217	0.	.0	1630.0	*	2	0526	884	0.	6.1	1639.0	*	3	03401551	0.
1	0714	218	0.	.0	1630.0	*	2	0528	885	0.	6.1	1639.0	*	3	03421552	0.
1	0716	219	0.	.0	1630.0	*	2	0530	886	0.	6.1	1639.0	*	3	03441553	0.
1	0718	220	0.	.0	1630.0	*	2	0532	887	0.	6.1	1639.0	*	3	03461554	0.
1	0720	221	0.	.0	1630.0	*	2	0534	888	0.	6.1	1639.0	*	3	03481555	0.
1	0722	222	0.	.0	1630.0	*	2	0536	889	0.	6.1	1639.0	*	3	03501556	0.
1	0724	223	0.	.0	1630.0	*	2	0538	890	0.	6.1	1639.0	*	3	03521557	0.
1	0726	224	0.	.0	1630.0	*	2	0540	891	0.	6.1	1639.0	*	3	03541558	0.
1	0728	225	0.	.0	1630.0	*	2	0542	892	0.	6.1	1639.0	*	3	03561559	0.
1	0730	226	0.	.0	1630.0	*	2	0544	893	0.	6.1	1639.0	*	3	03581560	0.
1	0732	227	0.	.0	1630.0	*	2	0546	894	0.	6.1	1639.0	*	3	04001561	0.
1	0734	228	0.	.0	1630.0	*	2	0548	895	0.	6.1	1639.0	*	3	04021562	0.
1	0736	229	0.	.0	1630.0	*	2	0550	896	0.	6.1	1639.0	*	3	04041563	0.
1	0738	230	0.	.0	1630.0	*	2	0552	897	0.	6.1	1639.0	*	3	04061564	0.
1	0740	231	0.	.0	1630.0	*	2	0554	898	0.	6.1	1639.0	*	3	04081565	0.
1	0742	232	0.	.0	1630.0	*	2	0556	899	0.	6.1	1639.0	*	3	04101566	0.
1	0744	233	0.	.0	1630.0	*	2	0558	900	0.	6.1	1639.0	*	3	04121567	0.
1	0746	234	0.	.0	1630.0	*	2	0600	901	0.	6.1	1639.0	*	3	04141568	0.
1	0748	235	0.	.0	1630.0	*	2	0602	902	0.	6.1	1639.0	*	3	04161569	0.
1	0750	236	0.	.0	1630.0	*	2	0604	903	0.	6.1	1639.0	*	3	04181570	0.
1	0752	237	0.	.0	1630.0	*	2	0606	904	0.	6.1	1639.0	*	3	04201571	0.
1	0754	238	0.	.0	1630.0	*	2	0608	905	0.	6.1	1639.0	*	3	04221572	0.
1	0756	239	0.	.0	1630.0	*	2	0610	906	0.	6.1	1639.0	*	3	04241573	0.
1	0758	240	0.	.0	1630.0	*	2	0612	907	0.	6.1	1639.0	*	3	04261574	0.
1	0800	241	0.	.0	1630.0	*	2	0614	908	0.	6.1	1639.0	*	3	04281575	0.
1	0802	242	0.	.0	1630.0	*	2	0616	909	0.	6.1	1639.0	*	3	04301576	0.
1	0804	243	0.	.0	1630.0	*	2	0618	910	0.	6.1	1639.0	*	3	04321577	0.
1	0806	244	0.	.0	1630.0	*	2	0620	911	0.	6.1	1639.0	*	3	04341578	0.
1	0808	245	0.	.0	1630.0	*	2	0622	912	0.	6.1	1639.0	*	3	04361579	0.
1	0810	246	0.	.0	1630.0	*	2	0624	913	0.	6.1	1639.0	*	3	04381580	0.
1	0812	247	0.	.0	1630.0	*	2	0626	914	0.	6.1	1639.0	*	3	04401581	0.
1	0814	248	0.	.0	1630.0	*	2	0628	915	0.	6.1	1639.0	*	3	04421582	0.
1	0816	249	0.	.0	1630.0	*	2	0630	916	0.	6.1	1639.0	*	3	04441583	0.
1	0818	250	0.	.0	1630.0	*	2	0632	917	0.	6.1	1639.0	*	3	04461584	0.
1	0820	251	0.	.0	1630.0	*	2	0634	918	0.	6.1	1639.0	*	3	04481585	0.
1	0822	252	0.	.0	1630.0	*	2	0636	919	0.	6.1	1639.0	*	3	04501586	0.
1	0824	253	0.	.0	1630.0	*	2	0638	920	0.	6.1	1639.0	*	3	04521587	0.
1	0826	254	0.	.0	1630.0	*	2	0640	921	0.	6.1	1639.0	*	3	04541588	0.
1	0828	255	0.	.0	1630.0	*	2	0642	922	0.	6.1	1639.0	*	3	04561589	0.
1	0830	256	0.	.0	1630.0	*	2	0644	923	0.	6.1	1639.0	*	3	04581590	0.
1	0832	257	0.	.0	1630.0	*	2	0646	924	0.	6.1	1639.0	*	3	05001591	0.
1	0834	258	0.	.0	1630.0	*	2	0648	925	0.	6.1	1639.0	*	3	05021592	0.
1	0836	259	0.	.0	1630.0	*	2	0650	926	0.	6.1	1639.0	*	3	05041593	0.
1	0838	260	0.	.0	1630.0	*	2	0652	927	0.	6.1	1639.0	*	3	05061594	0.
1	0840	261	0.	.0	1630.0	*	2	0654	928	0.	6.1	1639.0	*	3	05081595	0.
1	0842	262	0.	.0	1630.0	*	2	0656	929	0.	6.1	1639.0	*	3	05101596	0.
1	0844	263	0.	.0	1630.0	*	2	0658	930	0.	6.1	1639.0	*	3	05121597	0.
1	0846	264	0.	.0	1630.0	*	2	0700	931	0.	6.1	1639.0	*	3	05141598	0.
1	0848	265	0.	.0	1630.0	*	2	0702	932	0.	6.1	1639.0	*	3	05161599	0.
1	0850	266	0.	.0	1630.0	*	2	0704	933	0.	6.1	1639.0	*	3	05181600	0.
1	0852	267	0.	.0	1630.0	*	2	0706	934	0.	6.1	1639.0	*	3	05201601	0.
1	0854	268	0.	.0	1630.0	*	2	0708	935	0.	6.1	1639.0	*	3	05221602	0.
1	0856	269	0.	.0	1630.0	*	2	0710	936	0.	6.1	1639.0	*	3	05241603	0.
1	0858	270	0.	.0	1630.0	*	2	0712	937	0.	6.1	1639.0	*	3	05261604	0.
1	0900	271	0.	.0	1630.0	*	2	0714	938	0.	6.1	1639.0	*	3	05281605	0.
1	0902	272	0.	.0	1630.0	*	2	0716	939	0.	6.1	1639.0	*	3	05301606	0.
1	0904	273	0.	.0	1630.0	*	2	0718	940	0.	6.1	1639.0	*	3	05321607	0.
1	0906	274	0.	.0	1630.0	*	2	0720	941	0.	6.1	1639.0	*	3	05341608	0.
1	0908	275	0.	.0	1630.0	*	2	0722	942	0.	6.1	1639.0	*	3	05361609	0.
1	0910	276	0.	.0	1630.0	*	2	0724	943	0.	6.1	1639.0	*	3	05381610	0.
1	0912	277	0.	.0	1630.0	*	2	0726	944	0.	6.1	1639.0	*	3	05401611	0.
1	0914	278	0.	.0	1630.0	*	2	0728	945	0.	6.1	1639.0	*	3	05421612	0.
1	0916	279	0.	.0	1630.0	*	2	0730	946	0.	6.1	1639.0	*	3	05441613	0.
1	0918	280	0.	.0	1630.0	*	2	0732	947	0.	6.1	1639.0	*	3	05461614	0.
1	0920	281	0.	.0	1630.0	*	2	0734	948	0.	6.1	1639.0	*	3	05481615	0.
1	0922	282	0.	.0	1630.0	*	2	0736	949	0.	6.1	1639.0	*	3	05501616	0.
1	0924	283	0.	.0	1630.0	*	2	0738	950	0.	6.1	1639.0	*	3	05521617	0.
1	0926	284	0.	.0	1630.0	*	2	0740	951	0.	6.1	1639.0	*	3	05541618	0.

1	0928	285	0.	.0	1630.0	*	2	0742	952	0.	6.1	1639.0	*	3	05561619	0.
1	0930	286	0.	.0	1630.0	*	2	0744	953	0.	6.1	1639.0	*	3	05581620	0.
1	0932	287	0.	.0	1630.0	*	2	0746	954	0.	6.1	1639.0	*	3	06001621	0.
	0934	288	0.	.0	1630.0	*	2	0748	955	0.	6.1	1639.0	*	3	06021622	0.
	0936	289	0.	.0	1630.0	*	2	0750	956	0.	6.1	1639.0	*	3	06041623	0.
	0938	290	0.	.0	1630.0	*	2	0752	957	0.	6.1	1639.0	*	3	06061624	0.
1	0940	291	0.	.0	1630.0	*	2	0754	958	0.	6.1	1639.0	*	3	06081625	0.
1	0942	292	0.	.0	1630.0	*	2	0756	959	0.	6.1	1639.0	*	3	06101626	0.
1	0944	293	0.	.0	1630.0	*	2	0758	960	0.	6.1	1639.0	*	3	06121627	0.
1	0946	294	0.	.0	1630.0	*	2	0800	961	0.	6.1	1639.0	*	3	06141628	0.
1	0948	295	0.	.0	1630.0	*	2	0802	962	0.	6.1	1639.0	*	3	06161629	0.
1	0950	296	0.	.0	1630.0	*	2	0804	963	0.	6.1	1639.0	*	3	06181630	0.
1	0952	297	0.	.0	1630.0	*	2	0806	964	0.	6.1	1639.0	*	3	06201631	0.
1	0954	298	0.	.0	1630.0	*	2	0808	965	0.	6.1	1639.0	*	3	06221632	0.
1	0956	299	0.	.0	1630.0	*	2	0810	966	0.	6.1	1639.0	*	3	06241633	0.
1	0958	300	0.	.0	1630.0	*	2	0812	967	0.	6.1	1639.0	*	3	06261634	0.
1	1000	301	0.	.0	1630.0	*	2	0814	968	0.	6.1	1639.0	*	3	06281635	0.
1	1002	302	0.	.0	1630.0	*	2	0816	969	0.	6.1	1639.0	*	3	06301636	0.
1	1004	303	0.	.0	1630.0	*	2	0818	970	0.	6.1	1639.0	*	3	06321637	0.
1	1006	304	0.	.0	1630.0	*	2	0820	971	0.	6.1	1639.0	*	3	06341638	0.
1	1008	305	0.	.0	1630.0	*	2	0822	972	0.	6.1	1639.0	*	3	06361639	0.
1	1010	306	0.	.0	1630.0	*	2	0824	973	0.	6.1	1639.0	*	3	06381640	0.
1	1012	307	0.	.0	1630.0	*	2	0826	974	0.	6.1	1639.0	*	3	06401641	0.
1	1014	308	0.	.0	1630.0	*	2	0828	975	0.	6.1	1639.0	*	3	06421642	0.
1	1016	309	0.	.0	1630.0	*	2	0830	976	0.	6.1	1639.0	*	3	06441643	0.
1	1018	310	0.	.0	1630.0	*	2	0832	977	0.	6.1	1639.0	*	3	06461644	0.
1	1020	311	0.	.0	1630.0	*	2	0834	978	0.	6.1	1639.0	*	3	06481645	0.
1	1022	312	0.	.0	1630.0	*	2	0836	979	0.	6.1	1639.0	*	3	06501646	0.
1	1024	313	0.	.0	1630.0	*	2	0838	980	0.	6.1	1639.0	*	3	06521647	0.
1	1026	314	0.	.0	1630.0	*	2	0840	981	0.	6.1	1639.0	*	3	06541648	0.
1	1028	315	0.	.0	1630.0	*	2	0842	982	0.	6.1	1639.0	*	3	06561649	0.
1	1030	316	0.	.0	1630.0	*	2	0844	983	0.	6.1	1639.0	*	3	06581650	0.
1	1032	317	0.	.0	1630.0	*	2	0846	984	0.	6.1	1639.0	*	3	07001651	0.
1	1034	318	0.	.0	1630.0	*	2	0848	985	0.	6.1	1639.0	*	3	07021652	0.
1	1036	319	0.	.0	1630.0	*	2	0850	986	0.	6.1	1639.0	*	3	07041653	0.
1	1038	320	0.	.0	1630.0	*	2	0852	987	0.	6.1	1639.0	*	3	07061654	0.
1	1040	321	0.	.0	1630.0	*	2	0854	988	0.	6.1	1639.0	*	3	07081655	0.
1	1042	322	0.	.0	1630.0	*	2	0856	989	0.	6.1	1639.0	*	3	07101656	0.
1	1044	323	0.	.0	1630.0	*	2	0858	990	0.	6.1	1639.0	*	3	07121657	0.
	1046	324	0.	.0	1630.0	*	2	0900	991	0.	6.1	1639.0	*	3	07141658	0.
	1048	325	0.	.0	1630.0	*	2	0902	992	0.	6.1	1639.0	*	3	07161659	0.
	1050	326	0.	.0	1630.0	*	2	0904	993	0.	6.1	1639.0	*	3	07181660	0.
1	1052	327	0.	.0	1630.0	*	2	0906	994	0.	6.1	1639.0	*	3	07201661	0.
1	1054	328	0.	.0	1630.0	*	2	0908	995	0.	6.1	1639.0	*	3	07221662	0.
1	1056	329	0.	.0	1630.0	*	2	0910	996	0.	6.1	1639.0	*	3	07241663	0.
1	1058	330	0.	.0	1630.0	*	2	0912	997	0.	6.1	1639.0	*	3	07261664	0.
1	1100	331	0.	.0	1630.0	*	2	0914	998	0.	6.1	1639.0	*	3	07281665	0.
1	1102	332	0.	.0	1630.0	*	2	0916	999	0.	6.1	1639.0	*	3	07301666	0.
1	1104	333	0.	.0	1630.0	*	2	09181000		0.	6.1	1639.0	*	3	07321667	0.
1	1106	334	0.	.0	1630.0	*	2	09201001		0.	6.1	1639.0	*	3	07341668	0.
1	1108	335	0.	.0	1630.0	*	2	09221002		0.	6.1	1639.0	*	3	07361669	0.
1	1110	336	0.	.0	1630.0	*	2	09241003		0.	6.1	1639.0	*	3	07381670	0.
1	1112	337	0.	.0	1630.0	*	2	09261004		0.	6.1	1639.0	*	3	07401671	0.
1	1114	338	0.	.0	1630.0	*	2	09281005		0.	6.1	1639.0	*	3	07421672	0.
1	1116	339	0.	.0	1630.0	*	2	09301006		0.	6.1	1639.0	*	3	07441673	0.
1	1118	340	0.	.0	1630.0	*	2	09321007		0.	6.1	1639.0	*	3	07461674	0.
1	1120	341	0.	.0	1630.0	*	2	09341008		0.	6.1	1639.0	*	3	07481675	0.
1	1122	342	0.	.0	1630.0	*	2	09361009		0.	6.1	1639.0	*	3	07501676	0.
1	1124	343	0.	.0	1630.0	*	2	09381010		0.	6.1	1639.0	*	3	07521677	0.
1	1126	344	0.	.0	1630.0	*	2	09401011		0.	6.1	1639.0	*	3	07541678	0.
1	1128	345	0.	.0	1630.0	*	2	09421012		0.	6.1	1639.0	*	3	07561679	0.
1	1130	346	0.	.0	1630.0	*	2	09441013		0.	6.1	1639.0	*	3	07581680	0.
1	1132	347	0.	.0	1630.0	*	2	09461014		0.	6.1	1639.0	*	3	08001681	0.
1	1134	348	0.	.0	1630.0	*	2	09481015		0.	6.1	1639.0	*	3	08021682	0.
1	1136	349	0.	.0	1630.0	*	2	09501016		0.	6.1	1639.0	*	3	08041683	0.
1	1138	350	0.	.0	1630.0	*	2	09521017		0.	6.1	1639.0	*	3	08061684	0.
1	1140	351	0.	.0	1630.0	*	2	09541018		0.	6.1	1639.0	*	3	08081685	0.
1	1142	352	0.	.0	1630.0	*	2	09561019		0.	6.1	1639.0	*	3	08101686	0.
1	1144	353	0.	.0	1630.0	*	2	09581020		0.	6.1	1639.0	*	3	08121687	0.
1	1146	354	0.	.0	1630.0	*	2	10001021		0.	6.1	1639.0	*	3	08141688	0.
1	1148	355	0.	.0	1630.0	*	2	10021022		0.	6.1	1639.0	*	3	08161689	0.
1	1150	356	0.	.0	1630.0	*	2	10041023		0.	6.1	1639.0	*	3	08181690	0.
1	1152	357	0.	.0	1630.0	*	2	10061024		0.	6.1	1639.0	*	3	08201691	0.
1	1154	358	0.	.0	1630.1	*	2	10081025		0.	6.1	1639.0	*	3	08221692	0.
1	1156	359	0.	.1	1630.7	*	2	10101026		0.	6.1	1639.0	*	3	08241693	0.
	1158	360	0.	.3	1631.4	*	2	10121027		0.	6.1	1639.0	*	3	08261694	0.
	1200	361	0.	.6	1632.2	*	2	10141028		0.	6.1	1639.0	*	3	08281695	0.
	1202	362	0.	1.0	1633.1	*	2	10161029		0.	6.1	1639.0	*	3	08301696	0.
1	1204	363	0.	1.4	1633.9	*	2	10181030		0.	6.1	1639.0	*	3	08321697	0.
1	1206	364	0.	1.9	1634.7	*	2	10201031		0.	6.1	1639.0	*	3	08341698	0.
1	1208	365	0.	2.4	1635.4	*	2	10221032		0.	6.1	1639.0	*	3	08361699	0.
1	1210	366	0.	3.0	1636.1	*	2	10241033		0.	6.1	1639.0	*	3	08381700	0.
1	1212	367	0.	3.5	1636.6	*	2	10261034		0.	6.1	1639.0	*	3	08401701	0.
1	1214	368	0.	4.0	1637.2	*	2	10281035		0.	6.1	1639.0	*	3	08421702	0.

1	1216	369	0.	4.6	1637.7	*	2	10301036	0.	6.1	1639.0	*	3	08441703	0.
1	1218	370	0.	5.1	1638.2	*	2	10321037	0.	6.1	1639.0	*	3	08461704	0.
1	1220	371	0.	5.6	1638.6	*	2	10341038	0.	6.1	1639.0	*	3	08481705	0.
1	1222	372	0.	6.0	1638.9	*	2	10361039	0.	6.1	1639.0	*	3	08501706	0.
1	1224	373	5.	6.4	1639.2	*	2	10381040	0.	6.1	1639.0	*	3	08521707	0.
1	1226	374	11.	6.7	1639.5	*	2	10401041	0.	6.1	1639.0	*	3	08541708	0.
1	1228	375	16.	7.0	1639.6	*	2	10421042	0.	6.1	1639.0	*	3	08561709	0.
1	1230	376	19.	7.1	1639.7	*	2	10441043	0.	6.1	1639.0	*	3	08581710	0.
1	1232	377	19.	7.2	1639.8	*	2	10461044	0.	6.1	1639.0	*	3	09001711	0.
1	1234	378	19.	7.1	1639.8	*	2	10481045	0.	6.1	1639.0	*	3	09021712	0.
1	1236	379	18.	7.1	1639.7	*	2	10501046	0.	6.1	1639.0	*	3	09041713	0.
1	1238	380	17.	7.1	1639.7	*	2	10521047	0.	6.1	1639.0	*	3	09061714	0.
1	1240	381	16.	7.0	1639.7	*	2	10541048	0.	6.1	1639.0	*	3	09081715	0.
1	1242	382	16.	7.0	1639.6	*	2	10561049	0.	6.1	1639.0	*	3	09101716	0.
1	1244	383	15.	6.9	1639.6	*	2	10581050	0.	6.1	1639.0	*	3	09121717	0.
1	1246	384	14.	6.9	1639.6	*	2	11001051	0.	6.1	1639.0	*	3	09141718	0.
1	1248	385	13.	6.8	1639.5	*	2	11021052	0.	6.1	1639.0	*	3	09161719	0.
1	1250	386	13.	6.8	1639.5	*	2	11041053	0.	6.1	1639.0	*	3	09181720	0.
1	1252	387	12.	6.8	1639.5	*	2	11061054	0.	6.1	1639.0	*	3	09201721	0.
1	1254	388	12.	6.7	1639.5	*	2	11081055	0.	6.1	1639.0	*	3	09221722	0.
1	1256	389	11.	6.7	1639.4	*	2	11101056	0.	6.1	1639.0	*	3	09241723	0.
1	1258	390	11.	6.7	1639.4	*	2	11121057	0.	6.1	1639.0	*	3	09261724	0.
1	1300	391	10.	6.7	1639.4	*	2	11141058	0.	6.1	1639.0	*	3	09281725	0.
1	1302	392	10.	6.6	1639.4	*	2	11161059	0.	6.1	1639.0	*	3	09301726	0.
1	1304	393	9.	6.6	1639.4	*	2	11181060	0.	6.1	1639.0	*	3	09321727	0.
1	1306	394	9.	6.6	1639.3	*	2	11201061	0.	6.1	1639.0	*	3	09341728	0.
1	1308	395	8.	6.6	1639.3	*	2	11221062	0.	6.1	1639.0	*	3	09361729	0.
1	1310	396	8.	6.5	1639.3	*	2	11241063	0.	6.1	1639.0	*	3	09381730	0.
1	1312	397	7.	6.5	1639.3	*	2	11261064	0.	6.1	1639.0	*	3	09401731	0.
1	1314	398	7.	6.5	1639.3	*	2	11281065	0.	6.1	1639.0	*	3	09421732	0.
1	1316	399	7.	6.5	1639.3	*	2	11301066	0.	6.1	1639.0	*	3	09441733	0.
1	1318	400	6.	6.5	1639.3	*	2	11321067	0.	6.1	1639.0	*	3	09461734	0.
1	1320	401	6.	6.4	1639.2	*	2	11341068	0.	6.1	1639.0	*	3	09481735	0.
1	1322	402	6.	6.4	1639.2	*	2	11361069	0.	6.1	1639.0	*	3	09501736	0.
1	1324	403	6.	6.4	1639.2	*	2	11381070	0.	6.1	1639.0	*	3	09521737	0.
1	1326	404	5.	6.4	1639.2	*	2	11401071	0.	6.1	1639.0	*	3	09541738	0.
1	1328	405	5.	6.4	1639.2	*	2	11421072	0.	6.1	1639.0	*	3	09561739	0.
1	1330	406	5.	6.4	1639.2	*	2	11441073	0.	6.1	1639.0	*	3	09581740	0.
1	1332	407	5.	6.4	1639.2	*	2	11461074	0.	6.1	1639.0	*	3	10001741	0.
1	1334	408	4.	6.3	1639.2	*	2	11481075	0.	6.1	1639.0	*	3	10021742	0.
1	1336	409	4.	6.3	1639.2	*	2	11501076	0.	6.1	1639.0	*	3	10041743	0.
1	1338	410	4.	6.3	1639.2	*	2	11521077	0.	6.1	1639.0	*	3	10061744	0.
1	1340	411	4.	6.3	1639.1	*	2	11541078	0.	6.1	1639.0	*	3	10081745	0.
1	1342	412	4.	6.3	1639.1	*	2	11561079	0.	6.1	1639.0	*	3	10101746	0.
1	1344	413	3.	6.3	1639.1	*	2	11581080	0.	6.1	1639.0	*	3	10121747	0.
1	1346	414	3.	6.3	1639.1	*	2	12001081	0.	6.1	1639.0	*	3	10141748	0.
1	1348	415	3.	6.3	1639.1	*	2	12021082	0.	6.1	1639.0	*	3	10161749	0.
1	1350	416	3.	6.3	1639.1	*	2	12041083	0.	6.1	1639.0	*	3	10181750	0.
1	1352	417	3.	6.3	1639.1	*	2	12061084	0.	6.1	1639.0	*	3	10201751	0.
1	1354	418	3.	6.2	1639.1	*	2	12081085	0.	6.1	1639.0	*	3	10221752	0.
1	1356	419	3.	6.2	1639.1	*	2	12101086	0.	6.1	1639.0	*	3	10241753	0.
1	1358	420	2.	6.2	1639.1	*	2	12121087	0.	6.1	1639.0	*	3	10261754	0.
1	1400	421	2.	6.2	1639.1	*	2	12141088	0.	6.1	1639.0	*	3	10281755	0.
1	1402	422	2.	6.2	1639.1	*	2	12161089	0.	6.1	1639.0	*	3	10301756	0.
1	1404	423	2.	6.2	1639.1	*	2	12181090	0.	6.1	1639.0	*	3	10321757	0.
1	1406	424	2.	6.2	1639.1	*	2	12201091	0.	6.1	1639.0	*	3	10341758	0.
1	1408	425	2.	6.2	1639.1	*	2	12221092	0.	6.1	1639.0	*	3	10361759	0.
1	1410	426	2.	6.2	1639.1	*	2	12241093	0.	6.1	1639.0	*	3	10381760	0.
1	1412	427	2.	6.2	1639.1	*	2	12261094	0.	6.1	1639.0	*	3	10401761	0.
1	1414	428	2.	6.2	1639.1	*	2	12281095	0.	6.1	1639.0	*	3	10421762	0.
1	1416	429	2.	6.2	1639.1	*	2	12301096	0.	6.1	1639.0	*	3	10441763	0.
1	1418	430	1.	6.2	1639.1	*	2	12321097	0.	6.1	1639.0	*	3	10461764	0.
1	1420	431	1.	6.2	1639.1	*	2	12341098	0.	6.1	1639.0	*	3	10481765	0.
1	1422	432	1.	6.2	1639.1	*	2	12361099	0.	6.1	1639.0	*	3	10501766	0.
1	1424	433	1.	6.2	1639.0	*	2	12381100	0.	6.1	1639.0	*	3	10521767	0.
1	1426	434	1.	6.2	1639.0	*	2	12401101	0.	6.1	1639.0	*	3	10541768	0.
1	1428	435	1.	6.2	1639.0	*	2	12421102	0.	6.1	1639.0	*	3	10561769	0.
1	1430	436	1.	6.2	1639.0	*	2	12441103	0.	6.1	1639.0	*	3	10581770	0.
1	1432	437	1.	6.2	1639.0	*	2	12461104	0.	6.1	1639.0	*	3	11001771	0.
1	1434	438	1.	6.2	1639.0	*	2	12481105	0.	6.1	1639.0	*	3	11021772	0.
1	1436	439	1.	6.2	1639.0	*	2	12501106	0.	6.1	1639.0	*	3	11041773	0.
1	1438	440	1.	6.1	1639.0	*	2	12521107	0.	6.1	1639.0	*	3	11061774	0.
1	1440	441	1.	6.1	1639.0	*	2	12541108	0.	6.1	1639.0	*	3	11081775	0.
1	1442	442	1.	6.1	1639.0	*	2	12561109	0.	6.1	1639.0	*	3	11101776	0.
1	1444	443	1.	6.1	1639.0	*	2	12581110	0.	6.1	1639.0	*	3	11121777	0.
1	1446	444	1.	6.1	1639.0	*	2	13001111	0.	6.1	1639.0	*	3	11141778	0.
1	1448	445	1.	6.1	1639.0	*	2	13021112	0.	6.1	1639.0	*	3	11161779	0.
1	1450	446	1.	6.1	1639.0	*	2	13041113	0.	6.1	1639.0	*	3	11181780	0.
1	1452	447	1.	6.1	1639.0	*	2	13061114	0.	6.1	1639.0	*	3	11201781	0.
1	1454	448	1.	6.1	1639.0	*	2	13081115	0.	6.1	1639.0	*	3	11221782	0.
1	1456	449	1.	6.1	1639.0	*	2	13101116	0.	6.1	1639.0	*	3	11241783	0.
1	1458	450	1.	6.1	1639.0	*	2	13121117	0.	6.1	1639.0	*	3	11261784	0.
1	1500	451	1.	6.1	1639.0	*	2	13141118	0.	6.1	1639.0	*	3	11281785	0.
1	1502	452	0.	6.1	1639.0	*	2	13161119	0.	6.1	1639.0	*	3	11301786	0.

1	1504	453	0.	6.1	1639.0	*	2	13181120	0.	6.1	1639.0	*	3	11321787	0.
1	1506	454	0.	6.1	1639.0	*	2	13201121	0.	6.1	1639.0	*	3	11341788	0.
1	1508	455	0.	6.1	1639.0	*	2	13221122	0.	6.1	1639.0	*	3	11361789	0.
1	1510	456	0.	6.1	1639.0	*	2	13241123	0.	6.1	1639.0	*	3	11381790	0.
	1512	457	0.	6.1	1639.0	*	2	13261124	0.	6.1	1639.0	*	3	11401791	0.
	1514	458	0.	6.1	1639.0	*	2	13281125	0.	6.1	1639.0	*	3	11421792	0.
1	1516	459	0.	6.1	1639.0	*	2	13301126	0.	6.1	1639.0	*	3	11441793	0.
1	1518	460	0.	6.1	1639.0	*	2	13321127	0.	6.1	1639.0	*	3	11461794	0.
1	1520	461	0.	6.1	1639.0	*	2	13341128	0.	6.1	1639.0	*	3	11481795	0.
1	1522	462	0.	6.1	1639.0	*	2	13361129	0.	6.1	1639.0	*	3	11501796	0.
1	1524	463	0.	6.1	1639.0	*	2	13381130	0.	6.1	1639.0	*	3	11521797	0.
1	1526	464	0.	6.1	1639.0	*	2	13401131	0.	6.1	1639.0	*	3	11541798	0.
1	1528	465	0.	6.1	1639.0	*	2	13421132	0.	6.1	1639.0	*	3	11561799	0.
1	1530	466	0.	6.1	1639.0	*	2	13441133	0.	6.1	1639.0	*	3	11581800	0.
1	1532	467	0.	6.1	1639.0	*	2	13461134	0.	6.1	1639.0	*	3	12001801	0.
1	1534	468	0.	6.1	1639.0	*	2	13481135	0.	6.1	1639.0	*	3	12021802	0.
1	1536	469	0.	6.1	1639.0	*	2	13501136	0.	6.1	1639.0	*	3	12041803	0.
1	1538	470	0.	6.1	1639.0	*	2	13521137	0.	6.1	1639.0	*	3	12061804	0.
1	1540	471	0.	6.1	1639.0	*	2	13541138	0.	6.1	1639.0	*	3	12081805	0.
1	1542	472	0.	6.1	1639.0	*	2	13561139	0.	6.1	1639.0	*	3	12101806	0.
1	1544	473	0.	6.1	1639.0	*	2	13581140	0.	6.1	1639.0	*	3	12121807	0.
1	1546	474	0.	6.1	1639.0	*	2	14001141	0.	6.1	1639.0	*	3	12141808	0.
1	1548	475	0.	6.1	1639.0	*	2	14021142	0.	6.1	1639.0	*	3	12161809	0.
1	1550	476	0.	6.1	1639.0	*	2	14041143	0.	6.1	1639.0	*	3	12181810	0.
1	1552	477	0.	6.1	1639.0	*	2	14061144	0.	6.1	1639.0	*	3	12201811	0.
1	1554	478	0.	6.1	1639.0	*	2	14081145	0.	6.1	1639.0	*	3	12221812	0.
1	1556	479	0.	6.1	1639.0	*	2	14101146	0.	6.1	1639.0	*	3	12241813	0.
1	1558	480	0.	6.1	1639.0	*	2	14121147	0.	6.1	1639.0	*	3	12261814	0.
1	1600	481	0.	6.1	1639.0	*	2	14141148	0.	6.1	1639.0	*	3	12281815	0.
1	1602	482	0.	6.1	1639.0	*	2	14161149	0.	6.1	1639.0	*	3	12301816	0.
1	1604	483	0.	6.1	1639.0	*	2	14181150	0.	6.1	1639.0	*	3	12321817	0.
1	1606	484	0.	6.1	1639.0	*	2	14201151	0.	6.1	1639.0	*	3	12341818	0.
1	1608	485	0.	6.1	1639.0	*	2	14221152	0.	6.1	1639.0	*	3	12361819	0.
1	1610	486	0.	6.1	1639.0	*	2	14241153	0.	6.1	1639.0	*	3	12381820	0.
1	1612	487	0.	6.1	1639.0	*	2	14261154	0.	6.1	1639.0	*	3	12401821	0.
1	1614	488	0.	6.1	1639.0	*	2	14281155	0.	6.1	1639.0	*	3	12421822	0.
1	1616	489	0.	6.1	1639.0	*	2	14301156	0.	6.1	1639.0	*	3	12441823	0.
1	1618	490	0.	6.1	1639.0	*	2	14321157	0.	6.1	1639.0	*	3	12461824	0.
1	1620	491	0.	6.1	1639.0	*	2	14341158	0.	6.1	1639.0	*	3	12481825	0.
	1622	492	0.	6.1	1639.0	*	2	14361159	0.	6.1	1639.0	*	3	12501826	0.
	1624	493	0.	6.1	1639.0	*	2	14381160	0.	6.1	1639.0	*	3	12521827	0.
	1626	494	0.	6.1	1639.0	*	2	14401161	0.	6.1	1639.0	*	3	12541828	0.
1	1628	495	0.	6.1	1639.0	*	2	14421162	0.	6.1	1639.0	*	3	12561829	0.
1	1630	496	0.	6.1	1639.0	*	2	14441163	0.	6.1	1639.0	*	3	12581830	0.
1	1632	497	0.	6.1	1639.0	*	2	14461164	0.	6.1	1639.0	*	3	13001831	0.
1	1634	498	0.	6.1	1639.0	*	2	14481165	0.	6.1	1639.0	*	3	13021832	0.
1	1636	499	0.	6.1	1639.0	*	2	14501166	0.	6.1	1639.0	*	3	13041833	0.
1	1638	500	0.	6.1	1639.0	*	2	14521167	0.	6.1	1639.0	*	3	13061834	0.
1	1640	501	0.	6.1	1639.0	*	2	14541168	0.	6.1	1639.0	*	3	13081835	0.
1	1642	502	0.	6.1	1639.0	*	2	14561169	0.	6.1	1639.0	*	3	13101836	0.
1	1644	503	0.	6.1	1639.0	*	2	14581170	0.	6.1	1639.0	*	3	13121837	0.
1	1646	504	0.	6.1	1639.0	*	2	15001171	0.	6.1	1639.0	*	3	13141838	0.
1	1648	505	0.	6.1	1639.0	*	2	15021172	0.	6.1	1639.0	*	3	13161839	0.
1	1650	506	0.	6.1	1639.0	*	2	15041173	0.	6.1	1639.0	*	3	13181840	0.
1	1652	507	0.	6.1	1639.0	*	2	15061174	0.	6.1	1639.0	*	3	13201841	0.
1	1654	508	0.	6.1	1639.0	*	2	15081175	0.	6.1	1639.0	*	3	13221842	0.
1	1656	509	0.	6.1	1639.0	*	2	15101176	0.	6.1	1639.0	*	3	13241843	0.
1	1658	510	0.	6.1	1639.0	*	2	15121177	0.	6.1	1639.0	*	3	13261844	0.
1	1700	511	0.	6.1	1639.0	*	2	15141178	0.	6.1	1639.0	*	3	13281845	0.
1	1702	512	0.	6.1	1639.0	*	2	15161179	0.	6.1	1639.0	*	3	13301846	0.
1	1704	513	0.	6.1	1639.0	*	2	15181180	0.	6.1	1639.0	*	3	13321847	0.
1	1706	514	0.	6.1	1639.0	*	2	15201181	0.	6.1	1639.0	*	3	13341848	0.
1	1708	515	0.	6.1	1639.0	*	2	15221182	0.	6.1	1639.0	*	3	13361849	0.
1	1710	516	0.	6.1	1639.0	*	2	15241183	0.	6.1	1639.0	*	3	13381850	0.
1	1712	517	0.	6.1	1639.0	*	2	15261184	0.	6.1	1639.0	*	3	13401851	0.
1	1714	518	0.	6.1	1639.0	*	2	15281185	0.	6.1	1639.0	*	3	13421852	0.
1	1716	519	0.	6.1	1639.0	*	2	15301186	0.	6.1	1639.0	*	3	13441853	0.
1	1718	520	0.	6.1	1639.0	*	2	15321187	0.	6.1	1639.0	*	3	13461854	0.
1	1720	521	0.	6.1	1639.0	*	2	15341188	0.	6.1	1639.0	*	3	13481855	0.
1	1722	522	0.	6.1	1639.0	*	2	15361189	0.	6.1	1639.0	*	3	13501856	0.
1	1724	523	0.	6.1	1639.0	*	2	15381190	0.	6.1	1639.0	*	3	13521857	0.
1	1726	524	0.	6.1	1639.0	*	2	15401191	0.	6.1	1639.0	*	3	13541858	0.
1	1728	525	0.	6.1	1639.0	*	2	15421192	0.	6.1	1639.0	*	3	13561859	0.
1	1730	526	0.	6.1	1639.0	*	2	15441193	0.	6.1	1639.0	*	3	13581860	0.
1	1732	527	0.	6.1	1639.0	*	2	15461194	0.	6.1	1639.0	*	3	14001861	0.
	1734	528	0.	6.1	1639.0	*	2	15481195	0.	6.1	1639.0	*	3	14021862	0.
	1736	529	0.	6.1	1639.0	*	2	15501196	0.	6.1	1639.0	*	3	14041863	0.
	1738	530	0.	6.1	1639.0	*	2	15521197	0.	6.1	1639.0	*	3	14061864	0.
1	1740	531	0.	6.1	1639.0	*	2	15541198	0.	6.1	1639.0	*	3	14081865	0.
1	1742	532	0.	6.1	1639.0	*	2	15561199	0.	6.1	1639.0	*	3	14101866	0.
1	1744	533	0.	6.1	1639.0	*	2	15581200	0.	6.1	1639.0	*	3	14121867	0.
1	1746	534	0.	6.1	1639.0	*	2	16001201	0.	6.1	1639.0	*	3	14141868	0.
1	1748	535	0.	6.1	1639.0	*	2	16021202	0.	6.1	1639.0	*	3	14161869	0.
1	1750	536	0.	6.1	1639.0	*	2	16041203	0.	6.1	1639.0	*	3	14181870	0.

1	1752	537	0.	6.1	1639.0	*	2	16061204	0.	6.1	1639.0	*	3	14201871	0.
1	1754	538	0.	6.1	1639.0	*	2	16081205	0.	6.1	1639.0	*	3	14221872	0.
1	1756	539	0.	6.1	1639.0	*	2	16101206	0.	6.1	1639.0	*	3	14241873	0.
1	1758	540	0.	6.1	1639.0	*	2	16121207	0.	6.1	1639.0	*	3	14261874	0.
1	1800	541	0.	6.1	1639.0	*	2	16141208	0.	6.1	1639.0	*	3	14281875	0.
1	1802	542	0.	6.1	1639.0	*	2	16161209	0.	6.1	1639.0	*	3	14301876	0.
1	1804	543	0.	6.1	1639.0	*	2	16181210	0.	6.1	1639.0	*	3	14321877	0.
1	1806	544	0.	6.1	1639.0	*	2	16201211	0.	6.1	1639.0	*	3	14341878	0.
1	1808	545	0.	6.1	1639.0	*	2	16221212	0.	6.1	1639.0	*	3	14361879	0.
1	1810	546	0.	6.1	1639.0	*	2	16241213	0.	6.1	1639.0	*	3	14381880	0.
1	1812	547	0.	6.1	1639.0	*	2	16261214	0.	6.1	1639.0	*	3	14401881	0.
1	1814	548	0.	6.1	1639.0	*	2	16281215	0.	6.1	1639.0	*	3	14421882	0.
1	1816	549	0.	6.1	1639.0	*	2	16301216	0.	6.1	1639.0	*	3	14441883	0.
1	1818	550	0.	6.1	1639.0	*	2	16321217	0.	6.1	1639.0	*	3	14461884	0.
1	1820	551	0.	6.1	1639.0	*	2	16341218	0.	6.1	1639.0	*	3	14481885	0.
1	1822	552	0.	6.1	1639.0	*	2	16361219	0.	6.1	1639.0	*	3	14501886	0.
1	1824	553	0.	6.1	1639.0	*	2	16381220	0.	6.1	1639.0	*	3	14521887	0.
1	1826	554	0.	6.1	1639.0	*	2	16401221	0.	6.1	1639.0	*	3	14541888	0.
1	1828	555	0.	6.1	1639.0	*	2	16421222	0.	6.1	1639.0	*	3	14561889	0.
1	1830	556	0.	6.1	1639.0	*	2	16441223	0.	6.1	1639.0	*	3	14581890	0.
1	1832	557	0.	6.1	1639.0	*	2	16461224	0.	6.1	1639.0	*	3	15001891	0.
1	1834	558	0.	6.1	1639.0	*	2	16481225	0.	6.1	1639.0	*	3	15021892	0.
1	1836	559	0.	6.1	1639.0	*	2	16501226	0.	6.1	1639.0	*	3	15041893	0.
1	1838	560	0.	6.1	1639.0	*	2	16521227	0.	6.1	1639.0	*	3	15061894	0.
1	1840	561	0.	6.1	1639.0	*	2	16541228	0.	6.1	1639.0	*	3	15081895	0.
1	1842	562	0.	6.1	1639.0	*	2	16561229	0.	6.1	1639.0	*	3	15101896	0.
1	1844	563	0.	6.1	1639.0	*	2	16581230	0.	6.1	1639.0	*	3	15121897	0.
1	1846	564	0.	6.1	1639.0	*	2	17001231	0.	6.1	1639.0	*	3	15141898	0.
1	1848	565	0.	6.1	1639.0	*	2	17021232	0.	6.1	1639.0	*	3	15161899	0.
1	1850	566	0.	6.1	1639.0	*	2	17041233	0.	6.1	1639.0	*	3	15181900	0.
1	1852	567	0.	6.1	1639.0	*	2	17061234	0.	6.1	1639.0	*	3	15201901	0.
1	1854	568	0.	6.1	1639.0	*	2	17081235	0.	6.1	1639.0	*	3	15221902	0.
1	1856	569	0.	6.1	1639.0	*	2	17101236	0.	6.1	1639.0	*	3	15241903	0.
1	1858	570	0.	6.1	1639.0	*	2	17121237	0.	6.1	1639.0	*	3	15261904	0.
1	1900	571	0.	6.1	1639.0	*	2	17141238	0.	6.1	1639.0	*	3	15281905	0.
1	1902	572	0.	6.1	1639.0	*	2	17161239	0.	6.1	1639.0	*	3	15301906	0.
1	1904	573	0.	6.1	1639.0	*	2	17181240	0.	6.1	1639.0	*	3	15321907	0.
1	1906	574	0.	6.1	1639.0	*	2	17201241	0.	6.1	1639.0	*	3	15341908	0.
1	1908	575	0.	6.1	1639.0	*	2	17221242	0.	6.1	1639.0	*	3	15361909	0.
1	1910	576	0.	6.1	1639.0	*	2	17241243	0.	6.1	1639.0	*	3	15381910	0.
1	1912	577	0.	6.1	1639.0	*	2	17261244	0.	6.1	1639.0	*	3	15401911	0.
1	1914	578	0.	6.1	1639.0	*	2	17281245	0.	6.1	1639.0	*	3	15421912	0.
1	1916	579	0.	6.1	1639.0	*	2	17301246	0.	6.1	1639.0	*	3	15441913	0.
1	1918	580	0.	6.1	1639.0	*	2	17321247	0.	6.1	1639.0	*	3	15461914	0.
1	1920	581	0.	6.1	1639.0	*	2	17341248	0.	6.1	1639.0	*	3	15481915	0.
1	1922	582	0.	6.1	1639.0	*	2	17361249	0.	6.1	1639.0	*	3	15501916	0.
1	1924	583	0.	6.1	1639.0	*	2	17381250	0.	6.1	1639.0	*	3	15521917	0.
1	1926	584	0.	6.1	1639.0	*	2	17401251	0.	6.1	1639.0	*	3	15541918	0.
1	1928	585	0.	6.1	1639.0	*	2	17421252	0.	6.1	1639.0	*	3	15561919	0.
1	1930	586	0.	6.1	1639.0	*	2	17441253	0.	6.1	1639.0	*	3	15581920	0.
1	1932	587	0.	6.1	1639.0	*	2	17461254	0.	6.1	1639.0	*	3	16001921	0.
1	1934	588	0.	6.1	1639.0	*	2	17481255	0.	6.1	1639.0	*	3	16021922	0.
1	1936	589	0.	6.1	1639.0	*	2	17501256	0.	6.1	1639.0	*	3	16041923	0.
1	1938	590	0.	6.1	1639.0	*	2	17521257	0.	6.1	1639.0	*	3	16061924	0.
1	1940	591	0.	6.1	1639.0	*	2	17541258	0.	6.1	1639.0	*	3	16081925	0.
1	1942	592	0.	6.1	1639.0	*	2	17561259	0.	6.1	1639.0	*	3	16101926	0.
1	1944	593	0.	6.1	1639.0	*	2	17581260	0.	6.1	1639.0	*	3	16121927	0.
1	1946	594	0.	6.1	1639.0	*	2	18001261	0.	6.1	1639.0	*	3	16141928	0.
1	1948	595	0.	6.1	1639.0	*	2	18021262	0.	6.1	1639.0	*	3	16161929	0.
1	1950	596	0.	6.1	1639.0	*	2	18041263	0.	6.1	1639.0	*	3	16181930	0.
1	1952	597	0.	6.1	1639.0	*	2	18061264	0.	6.1	1639.0	*	3	16201931	0.
1	1954	598	0.	6.1	1639.0	*	2	18081265	0.	6.1	1639.0	*	3	16221932	0.
1	1956	599	0.	6.1	1639.0	*	2	18101266	0.	6.1	1639.0	*	3	16241933	0.
1	1958	600	0.	6.1	1639.0	*	2	18121267	0.	6.1	1639.0	*	3	16261934	0.
1	2000	601	0.	6.1	1639.0	*	2	18141268	0.	6.1	1639.0	*	3	16281935	0.
1	2002	602	0.	6.1	1639.0	*	2	18161269	0.	6.1	1639.0	*	3	16301936	0.
1	2004	603	0.	6.1	1639.0	*	2	18181270	0.	6.1	1639.0	*	3	16321937	0.
1	2006	604	0.	6.1	1639.0	*	2	18201271	0.	6.1	1639.0	*	3	16341938	0.
1	2008	605	0.	6.1	1639.0	*	2	18221272	0.	6.1	1639.0	*	3	16361939	0.
1	2010	606	0.	6.1	1639.0	*	2	18241273	0.	6.1	1639.0	*	3	16381940	0.
1	2012	607	0.	6.1	1639.0	*	2	18261274	0.	6.1	1639.0	*	3	16401941	0.
1	2014	608	0.	6.1	1639.0	*	2	18281275	0.	6.1	1639.0	*	3	16421942	0.
1	2016	609	0.	6.1	1639.0	*	2	18301276	0.	6.1	1639.0	*	3	16441943	0.
1	2018	610	0.	6.1	1639.0	*	2	18321277	0.	6.1	1639.0	*	3	16461944	0.
1	2020	611	0.	6.1	1639.0	*	2	18341278	0.	6.1	1639.0	*	3	16481945	0.
1	2022	612	0.	6.1	1639.0	*	2	18361279	0.	6.1	1639.0	*	3	16501946	0.
1	2024	613	0.	6.1	1639.0	*	2	18381280	0.	6.1	1639.0	*	3	16521947	0.
1	2026	614	0.	6.1	1639.0	*	2	18401281	0.	6.1	1639.0	*	3	16541948	0.
1	2028	615	0.	6.1	1639.0	*	2	18421282	0.	6.1	1639.0	*	3	16561949	0.
1	2030	616	0.	6.1	1639.0	*	2	18441283	0.	6.1	1639.0	*	3	16581950	0.
1	2032	617	0.	6.1	1639.0	*	2	18461284	0.	6.1	1639.0	*	3	17001951	0.
1	2034	618	0.	6.1	1639.0	*	2	18481285	0.	6.1	1639.0	*	3	17021952	0.
1	2036	619	0.	6.1	1639.0	*	2	18501286	0.	6.1	1639.0	*	3	17041953	0.
1	2038	620	0.	6.1	1639.0	*	2	18521287	0.	6.1	1639.0	*	3	17061954	0.

1	2040	621	0.	6.1	1639.0	*	2	18541288	0.	6.1	1639.0	*	3	17081955	0.
1	2042	622	0.	6.1	1639.0	*	2	18561289	0.	6.1	1639.0	*	3	17101956	0.
1	2044	623	0.	6.1	1639.0	*	2	18581290	0.	6.1	1639.0	*	3	17121957	0.
1	2046	624	0.	6.1	1639.0	*	2	19001291	0.	6.1	1639.0	*	3	17141958	0.
	2048	625	0.	6.1	1639.0	*	2	19021292	0.	6.1	1639.0	*	3	17161959	0.
	2050	626	0.	6.1	1639.0	*	2	19041293	0.	6.1	1639.0	*	3	17181960	0.
1	2052	627	0.	6.1	1639.0	*	2	19061294	0.	6.1	1639.0	*	3	17201961	0.
1	2054	628	0.	6.1	1639.0	*	2	19081295	0.	6.1	1639.0	*	3	17221962	0.
1	2056	629	0.	6.1	1639.0	*	2	19101296	0.	6.1	1639.0	*	3	17241963	0.
1	2058	630	0.	6.1	1639.0	*	2	19121297	0.	6.1	1639.0	*	3	17261964	0.
1	2100	631	0.	6.1	1639.0	*	2	19141298	0.	6.1	1639.0	*	3	17281965	0.
1	2102	632	0.	6.1	1639.0	*	2	19161299	0.	6.1	1639.0	*	3	17301966	0.
1	2104	633	0.	6.1	1639.0	*	2	19181300	0.	6.1	1639.0	*	3	17321967	0.
1	2106	634	0.	6.1	1639.0	*	2	19201301	0.	6.1	1639.0	*	3	17341968	0.
1	2108	635	0.	6.1	1639.0	*	2	19221302	0.	6.1	1639.0	*	3	17361969	0.
1	2110	636	0.	6.1	1639.0	*	2	19241303	0.	6.1	1639.0	*	3	17381970	0.
1	2112	637	0.	6.1	1639.0	*	2	19261304	0.	6.1	1639.0	*	3	17401971	0.
1	2114	638	0.	6.1	1639.0	*	2	19281305	0.	6.1	1639.0	*	3	17421972	0.
1	2116	639	0.	6.1	1639.0	*	2	19301306	0.	6.1	1639.0	*	3	17441973	0.
1	2118	640	0.	6.1	1639.0	*	2	19321307	0.	6.1	1639.0	*	3	17461974	0.
1	2120	641	0.	6.1	1639.0	*	2	19341308	0.	6.1	1639.0	*	3	17481975	0.
1	2122	642	0.	6.1	1639.0	*	2	19361309	0.	6.1	1639.0	*	3	17501976	0.
1	2124	643	0.	6.1	1639.0	*	2	19381310	0.	6.1	1639.0	*	3	17521977	0.
1	2126	644	0.	6.1	1639.0	*	2	19401311	0.	6.1	1639.0	*	3	17541978	0.
1	2128	645	0.	6.1	1639.0	*	2	19421312	0.	6.1	1639.0	*	3	17561979	0.
1	2130	646	0.	6.1	1639.0	*	2	19441313	0.	6.1	1639.0	*	3	17581980	0.
1	2132	647	0.	6.1	1639.0	*	2	19461314	0.	6.1	1639.0	*	3	18001981	0.
1	2134	648	0.	6.1	1639.0	*	2	19481315	0.	6.1	1639.0	*	3	18021982	0.
1	2136	649	0.	6.1	1639.0	*	2	19501316	0.	6.1	1639.0	*	3	18041983	0.
1	2138	650	0.	6.1	1639.0	*	2	19521317	0.	6.1	1639.0	*	3	18061984	0.
1	2140	651	0.	6.1	1639.0	*	2	19541318	0.	6.1	1639.0	*	3	18081985	0.
1	2142	652	0.	6.1	1639.0	*	2	19561319	0.	6.1	1639.0	*	3	18101986	0.
1	2144	653	0.	6.1	1639.0	*	2	19581320	0.	6.1	1639.0	*	3	18121987	0.
1	2146	654	0.	6.1	1639.0	*	2	20001321	0.	6.1	1639.0	*	3	18141988	0.
1	2148	655	0.	6.1	1639.0	*	2	20021322	0.	6.1	1639.0	*	3	18161989	0.
1	2150	656	0.	6.1	1639.0	*	2	20041323	0.	6.1	1639.0	*	3	18181990	0.
1	2152	657	0.	6.1	1639.0	*	2	20061324	0.	6.1	1639.0	*	3	18201991	0.
1	2154	658	0.	6.1	1639.0	*	2	20081325	0.	6.1	1639.0	*	3	18221992	0.
1	2156	659	0.	6.1	1639.0	*	2	20101326	0.	6.1	1639.0	*	3	18241993	0.
	2158	660	0.	6.1	1639.0	*	2	20121327	0.	6.1	1639.0	*	3	18261994	0.
	2200	661	0.	6.1	1639.0	*	2	20141328	0.	6.1	1639.0	*	3	18281995	0.
	2202	662	0.	6.1	1639.0	*	2	20161329	0.	6.1	1639.0	*	3	18301996	0.
1	2204	663	0.	6.1	1639.0	*	2	20181330	0.	6.1	1639.0	*	3	18321997	0.
1	2206	664	0.	6.1	1639.0	*	2	20201331	0.	6.1	1639.0	*	3	18341998	0.
1	2208	665	0.	6.1	1639.0	*	2	20221332	0.	6.1	1639.0	*	3	18361999	0.
1	2210	666	0.	6.1	1639.0	*	2	20241333	0.	6.1	1639.0	*	3	18382000	0.
1	2212	667	0.	6.1	1639.0	*	2	20261334	0.	6.1	1639.0	*			
						*						*			

****

PEAK FLOW	TIME		MAXIMUM AVERAGE FLOW			
			6-HR	24-HR	72-HR	66.63-HR
+ (CFS)	(HR)					
		(CFS)				
+ 19.	12.53		3.	1.	0.	0.
		(INCHES)	.015	.015	.015	.015
		(AC-FT)	1.	1.	1.	1.

PEAK STORAGE	TIME	MAXIMUM AVERAGE STORAGE			
		6-HR	24-HR	72-HR	66.63-HR
+ (AC-FT)	(HR)				
7.	12.53	6.	6.	5.	5.

PEAK STAGE	TIME	MAXIMUM AVERAGE STAGE			
		6-HR	24-HR	72-HR	66.63-HR
+ (FEET)	(HR)				
1639.77	12.53	1639.10	1639.03	1637.37	1637.37

CUMULATIVE AREA = 1.59 SQ MI

****

INTERPOLATED HYDROGRAPH AT SMCDB

****

DA	MON	HRMN	ORD	FLOW	*	DA	MON	HRMN	ORD	FLOW	*	DA	MON	HRMN	ORD	FLOW	*	DA	MON	HRMN	ORD
1		0000	1	0.	*	1		1640	501	0.	*	2		0920	1001	0.	*	3		0200	1501
1		0002	2	0.	*	1		1642	502	0.	*	2		0922	1002	0.	*	3		0202	1502
1		0004	3	0.	*	1		1644	503	0.	*	2		0924	1003	0.	*	3		0204	1503
1		0006	4	0.	*	1		1646	504	0.	*	2		0926	1004	0.	*	3		0206	1504
1		0008	5	0.	*	1		1648	505	0.	*	2		0928	1005	0.	*	3		0208	1505

1	0010	6	0.	*	1	1650	506	0.	*	2	0930	1006	0.	*	3	0210	1506
1	0012	7	0.	*	1	1652	507	0.	*	2	0932	1007	0.	*	3	0212	1507
1	0014	8	0.	*	1	1654	508	0.	*	2	0934	1008	0.	*	3	0214	1508
1	0016	9	0.	*	1	1656	509	0.	*	2	0936	1009	0.	*	3	0216	1509
1	0018	10	0.	*	1	1658	510	0.	*	2	0938	1010	0.	*	3	0218	15[illegible]
1	0020	11	0.	*	1	1700	511	0.	*	2	0940	1011	0.	*	3	0220	1[illegible]
1	0022	12	0.	*	1	1702	512	0.	*	2	0942	1012	0.	*	3	0222	1512
1	0024	13	0.	*	1	1704	513	0.	*	2	0944	1013	0.	*	3	0224	1513
1	0026	14	0.	*	1	1706	514	0.	*	2	0946	1014	0.	*	3	0226	1514
1	0028	15	0.	*	1	1708	515	0.	*	2	0948	1015	0.	*	3	0228	1515
1	0030	16	0.	*	1	1710	516	0.	*	2	0950	1016	0.	*	3	0230	1516
1	0032	17	0.	*	1	1712	517	0.	*	2	0952	1017	0.	*	3	0232	1517
1	0034	18	0.	*	1	1714	518	0.	*	2	0954	1018	0.	*	3	0234	1518
1	0036	19	0.	*	1	1716	519	0.	*	2	0956	1019	0.	*	3	0236	1519
1	0038	20	0.	*	1	1718	520	0.	*	2	0958	1020	0.	*	3	0238	1520
1	0040	21	0.	*	1	1720	521	0.	*	2	1000	1021	0.	*	3	0240	1521
1	0042	22	0.	*	1	1722	522	0.	*	2	1002	1022	0.	*	3	0242	1522
1	0044	23	0.	*	1	1724	523	0.	*	2	1004	1023	0.	*	3	0244	1523
1	0046	24	0.	*	1	1726	524	0.	*	2	1006	1024	0.	*	3	0246	1524
1	0048	25	0.	*	1	1728	525	0.	*	2	1008	1025	0.	*	3	0248	1525
1	0050	26	0.	*	1	1730	526	0.	*	2	1010	1026	0.	*	3	0250	1526
1	0052	27	0.	*	1	1732	527	0.	*	2	1012	1027	0.	*	3	0252	1527
1	0054	28	0.	*	1	1734	528	0.	*	2	1014	1028	0.	*	3	0254	1528
1	0056	29	0.	*	1	1736	529	0.	*	2	1016	1029	0.	*	3	0256	1529
1	0058	30	0.	*	1	1738	530	0.	*	2	1018	1030	0.	*	3	0258	1530
1	0100	31	0.	*	1	1740	531	0.	*	2	1020	1031	0.	*	3	0300	1531
1	0102	32	0.	*	1	1742	532	0.	*	2	1022	1032	0.	*	3	0302	1532
1	0104	33	0.	*	1	1744	533	0.	*	2	1024	1033	0.	*	3	0304	1533
1	0106	34	0.	*	1	1746	534	0.	*	2	1026	1034	0.	*	3	0306	1534
1	0108	35	0.	*	1	1748	535	0.	*	2	1028	1035	0.	*	3	0308	1535
1	0110	36	0.	*	1	1750	536	0.	*	2	1030	1036	0.	*	3	0310	1536
1	0112	37	0.	*	1	1752	537	0.	*	2	1032	1037	0.	*	3	0312	1537
1	0114	38	0.	*	1	1754	538	0.	*	2	1034	1038	0.	*	3	0314	1538
1	0116	39	0.	*	1	1756	539	0.	*	2	1036	1039	0.	*	3	0316	1539
1	0118	40	0.	*	1	1758	540	0.	*	2	1038	1040	0.	*	3	0318	1540
1	0120	41	0.	*	1	1800	541	0.	*	2	1040	1041	0.	*	3	0320	1541
1	0122	42	0.	*	1	1802	542	0.	*	2	1042	1042	0.	*	3	0322	1542
1	0124	43	0.	*	1	1804	543	0.	*	2	1044	1043	0.	*	3	0324	1543
1	0126	44	0.	*	1	1806	544	0.	*	2	1046	1044	0.	*	3	0326	1544
1	0128	45	0.	*	1	1808	545	0.	*	2	1048	1045	0.	*	3	0328	154[illegible]
1	0130	46	0.	*	1	1810	546	0.	*	2	1050	1046	0.	*	3	0330	1[illegible]
1	0132	47	0.	*	1	1812	547	0.	*	2	1052	1047	0.	*	3	0332	1[illegible]
1	0134	48	0.	*	1	1814	548	0.	*	2	1054	1048	0.	*	3	0334	1548
1	0136	49	0.	*	1	1816	549	0.	*	2	1056	1049	0.	*	3	0336	1549
1	0138	50	0.	*	1	1818	550	0.	*	2	1058	1050	0.	*	3	0338	1550
1	0140	51	0.	*	1	1820	551	0.	*	2	1100	1051	0.	*	3	0340	1551
1	0142	52	0.	*	1	1822	552	0.	*	2	1102	1052	0.	*	3	0342	1552
1	0144	53	0.	*	1	1824	553	0.	*	2	1104	1053	0.	*	3	0344	1553
1	0146	54	0.	*	1	1826	554	0.	*	2	1106	1054	0.	*	3	0346	1554
1	0148	55	0.	*	1	1828	555	0.	*	2	1108	1055	0.	*	3	0348	1555
1	0150	56	0.	*	1	1830	556	0.	*	2	1110	1056	0.	*	3	0350	1556
1	0152	57	0.	*	1	1832	557	0.	*	2	1112	1057	0.	*	3	0352	1557
1	0154	58	0.	*	1	1834	558	0.	*	2	1114	1058	0.	*	3	0354	1558
1	0156	59	0.	*	1	1836	559	0.	*	2	1116	1059	0.	*	3	0356	1559
1	0158	60	0.	*	1	1838	560	0.	*	2	1118	1060	0.	*	3	0358	1560
1	0200	61	0.	*	1	1840	561	0.	*	2	1120	1061	0.	*	3	0400	1561
1	0202	62	0.	*	1	1842	562	0.	*	2	1122	1062	0.	*	3	0402	1562
1	0204	63	0.	*	1	1844	563	0.	*	2	1124	1063	0.	*	3	0404	1563
1	0206	64	0.	*	1	1846	564	0.	*	2	1126	1064	0.	*	3	0406	1564
1	0208	65	0.	*	1	1848	565	0.	*	2	1128	1065	0.	*	3	0408	1565
1	0210	66	0.	*	1	1850	566	0.	*	2	1130	1066	0.	*	3	0410	1566
1	0212	67	0.	*	1	1852	567	0.	*	2	1132	1067	0.	*	3	0412	1567
1	0214	68	0.	*	1	1854	568	0.	*	2	1134	1068	0.	*	3	0414	1568
1	0216	69	0.	*	1	1856	569	0.	*	2	1136	1069	0.	*	3	0416	1569
1	0218	70	0.	*	1	1858	570	0.	*	2	1138	1070	0.	*	3	0418	1570
1	0220	71	0.	*	1	1900	571	0.	*	2	1140	1071	0.	*	3	0420	1571
1	0222	72	0.	*	1	1902	572	0.	*	2	1142	1072	0.	*	3	0422	1572
1	0224	73	0.	*	1	1904	573	0.	*	2	1144	1073	0.	*	3	0424	1573
1	0226	74	0.	*	1	1906	574	0.	*	2	1146	1074	0.	*	3	0426	1574
1	0228	75	0.	*	1	1908	575	0.	*	2	1148	1075	0.	*	3	0428	1575
1	0230	76	0.	*	1	1910	576	0.	*	2	1150	1076	0.	*	3	0430	1576
1	0232	77	0.	*	1	1912	577	0.	*	2	1152	1077	0.	*	3	0432	1577
1	0234	78	0.	*	1	1914	578	0.	*	2	1154	1078	0.	*	3	0434	1578
1	0236	79	0.	*	1	1916	579	0.	*	2	1156	1079	0.	*	3	0436	1579
1	0238	80	0.	*	1	1918	580	0.	*	2	1158	1080	0.	*	3	0438	1580
1	0240	81	0.	*	1	1920	581	0.	*	2	1200	1081	0.	*	3	0440	158[illegible]
1	0242	82	0.	*	1	1922	582	0.	*	2	1202	1082	0.	*	3	0442	1[illegible]
1	0244	83	0.	*	1	1924	583	0.	*	2	1204	1083	0.	*	3	0444	1[illegible]
1	0246	84	0.	*	1	1926	584	0.	*	2	1206	1084	0.	*	3	0446	1584
1	0248	85	0.	*	1	1928	585	0.	*	2	1208	1085	0.	*	3	0448	1585
1	0250	86	0.	*	1	1930	586	0.	*	2	1210	1086	0.	*	3	0450	1586
1	0252	87	0.	*	1	1932	587	0.	*	2	1212	1087	0.	*	3	0452	1587
1	0254	88	0.	*	1	1934	588	0.	*	2	1214	1088	0.	*	3	0454	1588
1	0256	89	0.	*	1	1936	589	0.	*	2	1216	1089	0.	*	3	0456	1589

1	0258	90	0.	*	1	1938	590	0.	*	2	1218	1090	0.	*	3	0458	1590
1	0300	91	0.	*	1	1940	591	0.	*	2	1220	1091	0.	*	3	0500	1591
1	0302	92	0.	*	1	1942	592	0.	*	2	1222	1092	0.	*	3	0502	1592
1	0304	93	0.	*	1	1944	593	0.	*	2	1224	1093	0.	*	3	0504	1593
1	0306	94	0.	*	1	1946	594	0.	*	2	1226	1094	0.	*	3	0506	1594
1	0308	95	0.	*	1	1948	595	0.	*	2	1228	1095	0.	*	3	0508	1595
1	0310	96	0.	*	1	1950	596	0.	*	2	1230	1096	0.	*	3	0510	1596
1	0312	97	0.	*	1	1952	597	0.	*	2	1232	1097	0.	*	3	0512	1597
1	0314	98	0.	*	1	1954	598	0.	*	2	1234	1098	0.	*	3	0514	1598
1	0316	99	0.	*	1	1956	599	0.	*	2	1236	1099	0.	*	3	0516	1599
1	0318	100	0.	*	1	1958	600	0.	*	2	1238	1100	0.	*	3	0518	1600
1	0320	101	0.	*	1	2000	601	0.	*	2	1240	1101	0.	*	3	0520	1601
1	0322	102	0.	*	1	2002	602	0.	*	2	1242	1102	0.	*	3	0522	1602
1	0324	103	0.	*	1	2004	603	0.	*	2	1244	1103	0.	*	3	0524	1603
1	0326	104	0.	*	1	2006	604	0.	*	2	1246	1104	0.	*	3	0526	1604
1	0328	105	0.	*	1	2008	605	0.	*	2	1248	1105	0.	*	3	0528	1605
1	0330	106	0.	*	1	2010	606	0.	*	2	1250	1106	0.	*	3	0530	1606
1	0332	107	0.	*	1	2012	607	0.	*	2	1252	1107	0.	*	3	0532	1607
1	0334	108	0.	*	1	2014	608	0.	*	2	1254	1108	0.	*	3	0534	1608
1	0336	109	0.	*	1	2016	609	0.	*	2	1256	1109	0.	*	3	0536	1609
1	0338	110	0.	*	1	2018	610	0.	*	2	1258	1110	0.	*	3	0538	1610
1	0340	111	0.	*	1	2020	611	0.	*	2	1300	1111	0.	*	3	0540	1611
1	0342	112	0.	*	1	2022	612	0.	*	2	1302	1112	0.	*	3	0542	1612
1	0344	113	0.	*	1	2024	613	0.	*	2	1304	1113	0.	*	3	0544	1613
1	0346	114	0.	*	1	2026	614	0.	*	2	1306	1114	0.	*	3	0546	1614
1	0348	115	0.	*	1	2028	615	0.	*	2	1308	1115	0.	*	3	0548	1615
1	0350	116	0.	*	1	2030	616	0.	*	2	1310	1116	0.	*	3	0550	1616
1	0352	117	0.	*	1	2032	617	0.	*	2	1312	1117	0.	*	3	0552	1617
1	0354	118	0.	*	1	2034	618	0.	*	2	1314	1118	0.	*	3	0554	1618
1	0356	119	0.	*	1	2036	619	0.	*	2	1316	1119	0.	*	3	0556	1619
1	0358	120	0.	*	1	2038	620	0.	*	2	1318	1120	0.	*	3	0558	1620
1	0400	121	0.	*	1	2040	621	0.	*	2	1320	1121	0.	*	3	0600	1621
1	0402	122	0.	*	1	2042	622	0.	*	2	1322	1122	0.	*	3	0602	1622
1	0404	123	0.	*	1	2044	623	0.	*	2	1324	1123	0.	*	3	0604	1623
1	0406	124	0.	*	1	2046	624	0.	*	2	1326	1124	0.	*	3	0606	1624
1	0408	125	0.	*	1	2048	625	0.	*	2	1328	1125	0.	*	3	0608	1625
1	0410	126	0.	*	1	2050	626	0.	*	2	1330	1126	0.	*	3	0610	1626
1	0412	127	0.	*	1	2052	627	0.	*	2	1332	1127	0.	*	3	0612	1627
1	0414	128	0.	*	1	2054	628	0.	*	2	1334	1128	0.	*	3	0614	1628
1	0416	129	0.	*	1	2056	629	0.	*	2	1336	1129	0.	*	3	0616	1629
1	0418	130	0.	*	1	2058	630	0.	*	2	1338	1130	0.	*	3	0618	1630
1	0420	131	0.	*	1	2100	631	0.	*	2	1340	1131	0.	*	3	0620	1631
1	0422	132	0.	*	1	2102	632	0.	*	2	1342	1132	0.	*	3	0622	1632
1	0424	133	0.	*	1	2104	633	0.	*	2	1344	1133	0.	*	3	0624	1633
1	0426	134	0.	*	1	2106	634	0.	*	2	1346	1134	0.	*	3	0626	1634
1	0428	135	0.	*	1	2108	635	0.	*	2	1348	1135	0.	*	3	0628	1635
1	0430	136	0.	*	1	2110	636	0.	*	2	1350	1136	0.	*	3	0630	1636
1	0432	137	0.	*	1	2112	637	0.	*	2	1352	1137	0.	*	3	0632	1637
1	0434	138	0.	*	1	2114	638	0.	*	2	1354	1138	0.	*	3	0634	1638
1	0436	139	0.	*	1	2116	639	0.	*	2	1356	1139	0.	*	3	0636	1639
1	0438	140	0.	*	1	2118	640	0.	*	2	1358	1140	0.	*	3	0638	1640
1	0440	141	0.	*	1	2120	641	0.	*	2	1400	1141	0.	*	3	0640	1641
1	0442	142	0.	*	1	2122	642	0.	*	2	1402	1142	0.	*	3	0642	1642
1	0444	143	0.	*	1	2124	643	0.	*	2	1404	1143	0.	*	3	0644	1643
1	0446	144	0.	*	1	2126	644	0.	*	2	1406	1144	0.	*	3	0646	1644
1	0448	145	0.	*	1	2128	645	0.	*	2	1408	1145	0.	*	3	0648	1645
1	0450	146	0.	*	1	2130	646	0.	*	2	1410	1146	0.	*	3	0650	1646
1	0452	147	0.	*	1	2132	647	0.	*	2	1412	1147	0.	*	3	0652	1647
1	0454	148	0.	*	1	2134	648	0.	*	2	1414	1148	0.	*	3	0654	1648
1	0456	149	0.	*	1	2136	649	0.	*	2	1416	1149	0.	*	3	0656	1649
1	0458	150	0.	*	1	2138	650	0.	*	2	1418	1150	0.	*	3	0658	1650
1	0500	151	0.	*	1	2140	651	0.	*	2	1420	1151	0.	*	3	0700	1651
1	0502	152	0.	*	1	2142	652	0.	*	2	1422	1152	0.	*	3	0702	1652
1	0504	153	0.	*	1	2144	653	0.	*	2	1424	1153	0.	*	3	0704	1653
1	0506	154	0.	*	1	2146	654	0.	*	2	1426	1154	0.	*	3	0706	1654
1	0508	155	0.	*	1	2148	655	0.	*	2	1428	1155	0.	*	3	0708	1655
1	0510	156	0.	*	1	2150	656	0.	*	2	1430	1156	0.	*	3	0710	1656
1	0512	157	0.	*	1	2152	657	0.	*	2	1432	1157	0.	*	3	0712	1657
1	0514	158	0.	*	1	2154	658	0.	*	2	1434	1158	0.	*	3	0714	1658
1	0516	159	0.	*	1	2156	659	0.	*	2	1436	1159	0.	*	3	0716	1659
1	0518	160	0.	*	1	2158	660	0.	*	2	1438	1160	0.	*	3	0718	1660
1	0520	161	0.	*	1	2200	661	0.	*	2	1440	1161	0.	*	3	0720	1661
1	0522	162	0.	*	1	2202	662	0.	*	2	1442	1162	0.	*	3	0722	1662
1	0524	163	0.	*	1	2204	663	0.	*	2	1444	1163	0.	*	3	0724	1663
1	0526	164	0.	*	1	2206	664	0.	*	2	1446	1164	0.	*	3	0726	1664
1	0528	165	0.	*	1	2208	665	0.	*	2	1448	1165	0.	*	3	0728	1665
1	0530	166	0.	*	1	2210	666	0.	*	2	1450	1166	0.	*	3	0730	1666
1	0532	167	0.	*	1	2212	667	0.	*	2	1452	1167	0.	*	3	0732	1667
1	0534	168	0.	*	1	2214	668	0.	*	2	1454	1168	0.	*	3	0734	1668
1	0536	169	0.	*	1	2216	669	0.	*	2	1456	1169	0.	*	3	0736	1669
1	0538	170	0.	*	1	2218	670	0.	*	2	1458	1170	0.	*	3	0738	1670
1	0540	171	0.	*	1	2220	671	0.	*	2	1500	1171	0.	*	3	0740	1671
1	0542	172	0.	*	1	2222	672	0.	*	2	1502	1172	0.	*	3	0742	1672
1	0544	173	0.	*	1	2224	673	0.	*	2	1504	1173	0.	*	3	0744	1673

1	0546	174	0.	*	1	2226	674	0.	*	2	1506	1174	0.	*	3	0746	1674
1	0548	175	0.	*	1	2228	675	0.	*	2	1508	1175	0.	*	3	0748	1675
1	0550	176	0.	*	1	2230	676	0.	*	2	1510	1176	0.	*	3	0750	1676
1	0552	177	0.	*	1	2232	677	0.	*	2	1512	1177	0.	*	3	0752	1677
1	0554	178	0.	*	1	2234	678	0.	*	2	1514	1178	0.	*	3	0754	1[illegible]
1	0556	179	0.	*	1	2236	679	0.	*	2	1516	1179	0.	*	3	0756	1[illegible]
1	0558	180	0.	*	1	2238	680	0.	*	2	1518	1180	0.	*	3	0758	1680
1	0600	181	0.	*	1	2240	681	0.	*	2	1520	1181	0.	*	3	0800	1681
1	0602	182	0.	*	1	2242	682	0.	*	2	1522	1182	0.	*	3	0802	1682
1	0604	183	0.	*	1	2244	683	0.	*	2	1524	1183	0.	*	3	0804	1683
1	0606	184	0.	*	1	2246	684	0.	*	2	1526	1184	0.	*	3	0806	1684
1	0608	185	0.	*	1	2248	685	0.	*	2	1528	1185	0.	*	3	0808	1685
1	0610	186	0.	*	1	2250	686	0.	*	2	1530	1186	0.	*	3	0810	1686
1	0612	187	0.	*	1	2252	687	0.	*	2	1532	1187	0.	*	3	0812	1687
1	0614	188	0.	*	1	2254	688	0.	*	2	1534	1188	0.	*	3	0814	1688
1	0616	189	0.	*	1	2256	689	0.	*	2	1536	1189	0.	*	3	0816	1689
1	0618	190	0.	*	1	2258	690	0.	*	2	1538	1190	0.	*	3	0818	1690
1	0620	191	0.	*	1	2300	691	0.	*	2	1540	1191	0.	*	3	0820	1691
1	0622	192	0.	*	1	2302	692	0.	*	2	1542	1192	0.	*	3	0822	1692
1	0624	193	0.	*	1	2304	693	0.	*	2	1544	1193	0.	*	3	0824	1693
1	0626	194	0.	*	1	2306	694	0.	*	2	1546	1194	0.	*	3	0826	1694
1	0628	195	0.	*	1	2308	695	0.	*	2	1548	1195	0.	*	3	0828	1695
1	0630	196	0.	*	1	2310	696	0.	*	2	1550	1196	0.	*	3	0830	1696
1	0632	197	0.	*	1	2312	697	0.	*	2	1552	1197	0.	*	3	0832	1697
1	0634	198	0.	*	1	2314	698	0.	*	2	1554	1198	0.	*	3	0834	1698
1	0636	199	0.	*	1	2316	699	0.	*	2	1556	1199	0.	*	3	0836	1699
1	0638	200	0.	*	1	2318	700	0.	*	2	1558	1200	0.	*	3	0838	1700
1	0640	201	0.	*	1	2320	701	0.	*	2	1600	1201	0.	*	3	0840	1701
1	0642	202	0.	*	1	2322	702	0.	*	2	1602	1202	0.	*	3	0842	1702
1	0644	203	0.	*	1	2324	703	0.	*	2	1604	1203	0.	*	3	0844	1703
1	0646	204	0.	*	1	2326	704	0.	*	2	1606	1204	0.	*	3	0846	1704
1	0648	205	0.	*	1	2328	705	0.	*	2	1608	1205	0.	*	3	0848	1705
1	0650	206	0.	*	1	2330	706	0.	*	2	1610	1206	0.	*	3	0850	1706
1	0652	207	0.	*	1	2332	707	0.	*	2	1612	1207	0.	*	3	0852	1707
1	0654	208	0.	*	1	2334	708	0.	*	2	1614	1208	0.	*	3	0854	1708
1	0656	209	0.	*	1	2336	709	0.	*	2	1616	1209	0.	*	3	0856	1709
1	0658	210	0.	*	1	2338	710	0.	*	2	1618	1210	0.	*	3	0858	1710
1	0700	211	0.	*	1	2340	711	0.	*	2	1620	1211	0.	*	3	0900	1711
1	0702	212	0.	*	1	2342	712	0.	*	2	1622	1212	0.	*	3	0902	1712
1	0704	213	0.	*	1	2344	713	0.	*	2	1624	1213	0.	*	3	0904	171[illegible]
1	0706	214	0.	*	1	2346	714	0.	*	2	1626	1214	0.	*	3	0906	1[illegible]
1	0708	215	0.	*	1	2348	715	0.	*	2	1628	1215	0.	*	3	0908	1[illegible]
1	0710	216	0.	*	1	2350	716	0.	*	2	1630	1216	0.	*	3	0910	1716
1	0712	217	0.	*	1	2352	717	0.	*	2	1632	1217	0.	*	3	0912	1717
1	0714	218	0.	*	1	2354	718	0.	*	2	1634	1218	0.	*	3	0914	1718
1	0716	219	0.	*	1	2356	719	0.	*	2	1636	1219	0.	*	3	0916	1719
1	0718	220	0.	*	1	2358	720	0.	*	2	1638	1220	0.	*	3	0918	1720
1	0720	221	0.	*	2	0000	721	0.	*	2	1640	1221	0.	*	3	0920	1721
1	0722	222	0.	*	2	0002	722	0.	*	2	1642	1222	0.	*	3	0922	1722
1	0724	223	0.	*	2	0004	723	0.	*	2	1644	1223	0.	*	3	0924	1723
1	0726	224	0.	*	2	0006	724	0.	*	2	1646	1224	0.	*	3	0926	1724
1	0728	225	0.	*	2	0008	725	0.	*	2	1648	1225	0.	*	3	0928	1725
1	0730	226	0.	*	2	0010	726	0.	*	2	1650	1226	0.	*	3	0930	1726
1	0732	227	0.	*	2	0012	727	0.	*	2	1652	1227	0.	*	3	0932	1727
1	0734	228	0.	*	2	0014	728	0.	*	2	1654	1228	0.	*	3	0934	1728
1	0736	229	0.	*	2	0016	729	0.	*	2	1656	1229	0.	*	3	0936	1729
1	0738	230	0.	*	2	0018	730	0.	*	2	1658	1230	0.	*	3	0938	1730
1	0740	231	0.	*	2	0020	731	0.	*	2	1700	1231	0.	*	3	0940	1731
1	0742	232	0.	*	2	0022	732	0.	*	2	1702	1232	0.	*	3	0942	1732
1	0744	233	0.	*	2	0024	733	0.	*	2	1704	1233	0.	*	3	0944	1733
1	0746	234	0.	*	2	0026	734	0.	*	2	1706	1234	0.	*	3	0946	1734
1	0748	235	0.	*	2	0028	735	0.	*	2	1708	1235	0.	*	3	0948	1735
1	0750	236	0.	*	2	0030	736	0.	*	2	1710	1236	0.	*	3	0950	1736
1	0752	237	0.	*	2	0032	737	0.	*	2	1712	1237	0.	*	3	0952	1737
1	0754	238	0.	*	2	0034	738	0.	*	2	1714	1238	0.	*	3	0954	1738
1	0756	239	0.	*	2	0036	739	0.	*	2	1716	1239	0.	*	3	0956	1739
1	0758	240	0.	*	2	0038	740	0.	*	2	1718	1240	0.	*	3	0958	1740
1	0800	241	0.	*	2	0040	741	0.	*	2	1720	1241	0.	*	3	1000	1741
1	0802	242	0.	*	2	0042	742	0.	*	2	1722	1242	0.	*	3	1002	1742
1	0804	243	0.	*	2	0044	743	0.	*	2	1724	1243	0.	*	3	1004	1743
1	0806	244	0.	*	2	0046	744	0.	*	2	1726	1244	0.	*	3	1006	1744
1	0808	245	0.	*	2	0048	745	0.	*	2	1728	1245	0.	*	3	1008	1745
1	0810	246	0.	*	2	0050	746	0.	*	2	1730	1246	0.	*	3	1010	1746
1	0812	247	0.	*	2	0052	747	0.	*	2	1732	1247	0.	*	3	1012	1747
1	0814	248	0.	*	2	0054	748	0.	*	2	1734	1248	0.	*	3	1014	1748
1	0816	249	0.	*	2	0056	749	0.	*	2	1736	1249	0.	*	3	1016	17[illegible]
1	0818	250	0.	*	2	0058	750	0.	*	2	1738	1250	0.	*	3	1018	1[illegible]
1	0820	251	0.	*	2	0100	751	0.	*	2	1740	1251	0.	*	3	1020	1[illegible]
1	0822	252	0.	*	2	0102	752	0.	*	2	1742	1252	0.	*	3	1022	1752
1	0824	253	0.	*	2	0104	753	0.	*	2	1744	1253	0.	*	3	1024	1753
1	0826	254	0.	*	2	0106	754	0.	*	2	1746	1254	0.	*	3	1026	1754
1	0828	255	0.	*	2	0108	755	0.	*	2	1748	1255	0.	*	3	1028	1755
1	0830	256	0.	*	2	0110	756	0.	*	2	1750	1256	0.	*	3	1030	1756
1	0832	257	0.	*	2	0112	757	0.	*	2	1752	1257	0.	*	3	1032	1757

1	0834	258	0.	*	2	0114	758	0.	*	2	1754	1258	0.	*	3	1034	1758
1	0836	259	0.	*	2	0116	759	0.	*	2	1756	1259	0.	*	3	1036	1759
1	0838	260	0.	*	2	0118	760	0.	*	2	1758	1260	0.	*	3	1038	1760
1	0840	261	0.	*	2	0120	761	0.	*	2	1800	1261	0.	*	3	1040	1761
1	0842	262	0.	*	2	0122	762	0.	*	2	1802	1262	0.	*	3	1042	1762
1	0844	263	0.	*	2	0124	763	0.	*	2	1804	1263	0.	*	3	1044	1763
1	0846	264	0.	*	2	0126	764	0.	*	2	1806	1264	0.	*	3	1046	1764
1	0848	265	0.	*	2	0128	765	0.	*	2	1808	1265	0.	*	3	1048	1765
1	0850	266	0.	*	2	0130	766	0.	*	2	1810	1266	0.	*	3	1050	1766
1	0852	267	0.	*	2	0132	767	0.	*	2	1812	1267	0.	*	3	1052	1767
1	0854	268	0.	*	2	0134	768	0.	*	2	1814	1268	0.	*	3	1054	1768
1	0856	269	0.	*	2	0136	769	0.	*	2	1816	1269	0.	*	3	1056	1769
1	0858	270	0.	*	2	0138	770	0.	*	2	1818	1270	0.	*	3	1058	1770
1	0900	271	0.	*	2	0140	771	0.	*	2	1820	1271	0.	*	3	1100	1771
1	0902	272	0.	*	2	0142	772	0.	*	2	1822	1272	0.	*	3	1102	1772
1	0904	273	0.	*	2	0144	773	0.	*	2	1824	1273	0.	*	3	1104	1773
1	0906	274	0.	*	2	0146	774	0.	*	2	1826	1274	0.	*	3	1106	1774
1	0908	275	0.	*	2	0148	775	0.	*	2	1828	1275	0.	*	3	1108	1775
1	0910	276	0.	*	2	0150	776	0.	*	2	1830	1276	0.	*	3	1110	1776
1	0912	277	0.	*	2	0152	777	0.	*	2	1832	1277	0.	*	3	1112	1777
1	0914	278	0.	*	2	0154	778	0.	*	2	1834	1278	0.	*	3	1114	1778
1	0916	279	0.	*	2	0156	779	0.	*	2	1836	1279	0.	*	3	1116	1779
1	0918	280	0.	*	2	0158	780	0.	*	2	1838	1280	0.	*	3	1118	1780
1	0920	281	0.	*	2	0200	781	0.	*	2	1840	1281	0.	*	3	1120	1781
1	0922	282	0.	*	2	0202	782	0.	*	2	1842	1282	0.	*	3	1122	1782
1	0924	283	0.	*	2	0204	783	0.	*	2	1844	1283	0.	*	3	1124	1783
1	0926	284	0.	*	2	0206	784	0.	*	2	1846	1284	0.	*	3	1126	1784
1	0928	285	0.	*	2	0208	785	0.	*	2	1848	1285	0.	*	3	1128	1785
1	0930	286	0.	*	2	0210	786	0.	*	2	1850	1286	0.	*	3	1130	1786
1	0932	287	0.	*	2	0212	787	0.	*	2	1852	1287	0.	*	3	1132	1787
1	0934	288	0.	*	2	0214	788	0.	*	2	1854	1288	0.	*	3	1134	1788
1	0936	289	0.	*	2	0216	789	0.	*	2	1856	1289	0.	*	3	1136	1789
1	0938	290	0.	*	2	0218	790	0.	*	2	1858	1290	0.	*	3	1138	1790
1	0940	291	0.	*	2	0220	791	0.	*	2	1900	1291	0.	*	3	1140	1791
1	0942	292	0.	*	2	0222	792	0.	*	2	1902	1292	0.	*	3	1142	1792
1	0944	293	0.	*	2	0224	793	0.	*	2	1904	1293	0.	*	3	1144	1793
1	0946	294	0.	*	2	0226	794	0.	*	2	1906	1294	0.	*	3	1146	1794
1	0948	295	0.	*	2	0228	795	0.	*	2	1908	1295	0.	*	3	1148	1795
1	0950	296	0.	*	2	0230	796	0.	*	2	1910	1296	0.	*	3	1150	1796
1	0952	297	0.	*	2	0232	797	0.	*	2	1912	1297	0.	*	3	1152	1797
1	0954	298	0.	*	2	0234	798	0.	*	2	1914	1298	0.	*	3	1154	1798
1	0956	299	0.	*	2	0236	799	0.	*	2	1916	1299	0.	*	3	1156	1799
1	0958	300	0.	*	2	0238	800	0.	*	2	1918	1300	0.	*	3	1158	1800
1	1000	301	0.	*	2	0240	801	0.	*	2	1920	1301	0.	*	3	1200	1801
1	1002	302	0.	*	2	0242	802	0.	*	2	1922	1302	0.	*	3	1202	1802
1	1004	303	0.	*	2	0244	803	0.	*	2	1924	1303	0.	*	3	1204	1803
1	1006	304	0.	*	2	0246	804	0.	*	2	1926	1304	0.	*	3	1206	1804
1	1008	305	0.	*	2	0248	805	0.	*	2	1928	1305	0.	*	3	1208	1805
1	1010	306	0.	*	2	0250	806	0.	*	2	1930	1306	0.	*	3	1210	1806
1	1012	307	0.	*	2	0252	807	0.	*	2	1932	1307	0.	*	3	1212	1807
1	1014	308	0.	*	2	0254	808	0.	*	2	1934	1308	0.	*	3	1214	1808
1	1016	309	0.	*	2	0256	809	0.	*	2	1936	1309	0.	*	3	1216	1809
1	1018	310	0.	*	2	0258	810	0.	*	2	1938	1310	0.	*	3	1218	1810
1	1020	311	0.	*	2	0300	811	0.	*	2	1940	1311	0.	*	3	1220	1811
1	1022	312	0.	*	2	0302	812	0.	*	2	1942	1312	0.	*	3	1222	1812
1	1024	313	0.	*	2	0304	813	0.	*	2	1944	1313	0.	*	3	1224	1813
1	1026	314	0.	*	2	0306	814	0.	*	2	1946	1314	0.	*	3	1226	1814
1	1028	315	0.	*	2	0308	815	0.	*	2	1948	1315	0.	*	3	1228	1815
1	1030	316	0.	*	2	0310	816	0.	*	2	1950	1316	0.	*	3	1230	1816
1	1032	317	0.	*	2	0312	817	0.	*	2	1952	1317	0.	*	3	1232	1817
1	1034	318	0.	*	2	0314	818	0.	*	2	1954	1318	0.	*	3	1234	1818
1	1036	319	0.	*	2	0316	819	0.	*	2	1956	1319	0.	*	3	1236	1819
1	1038	320	0.	*	2	0318	820	0.	*	2	1958	1320	0.	*	3	1238	1820
1	1040	321	0.	*	2	0320	821	0.	*	2	2000	1321	0.	*	3	1240	1821
1	1042	322	0.	*	2	0322	822	0.	*	2	2002	1322	0.	*	3	1242	1822
1	1044	323	0.	*	2	0324	823	0.	*	2	2004	1323	0.	*	3	1244	1823
1	1046	324	0.	*	2	0326	824	0.	*	2	2006	1324	0.	*	3	1246	1824
1	1048	325	0.	*	2	0328	825	0.	*	2	2008	1325	0.	*	3	1248	1825
1	1050	326	0.	*	2	0330	826	0.	*	2	2010	1326	0.	*	3	1250	1826
1	1052	327	0.	*	2	0332	827	0.	*	2	2012	1327	0.	*	3	1252	1827
1	1054	328	0.	*	2	0334	828	0.	*	2	2014	1328	0.	*	3	1254	1828
1	1056	329	0.	*	2	0336	829	0.	*	2	2016	1329	0.	*	3	1256	1829
1	1058	330	0.	*	2	0338	830	0.	*	2	2018	1330	0.	*	3	1258	1830
1	1100	331	0.	*	2	0340	831	0.	*	2	2020	1331	0.	*	3	1300	1831
1	1102	332	0.	*	2	0342	832	0.	*	2	2022	1332	0.	*	3	1302	1832
1	1104	333	0.	*	2	0344	833	0.	*	2	2024	1333	0.	*	3	1304	1833
1	1106	334	0.	*	2	0346	834	0.	*	2	2026	1334	0.	*	3	1306	1834
1	1108	335	0.	*	2	0348	835	0.	*	2	2028	1335	0.	*	3	1308	1835
1	1110	336	0.	*	2	0350	836	0.	*	2	2030	1336	0.	*	3	1310	1836
1	1112	337	0.	*	2	0352	837	0.	*	2	2032	1337	0.	*	3	1312	1837
1	1114	338	0.	*	2	0354	838	0.	*	2	2034	1338	0.	*	3	1314	1838
1	1116	339	0.	*	2	0356	839	0.	*	2	2036	1339	0.	*	3	1316	1839
1	1118	340	0.	*	2	0358	840	0.	*	2	2038	1340	0.	*	3	1318	1840
1	1120	341	0.	*	2	0400	841	0.	*	2	2040	1341	0.	*	3	1320	1841

1	1122	342	0.	*	2	0402	842	0.	*	2	2042	1342	0.	*	3	1322	1842
1	1124	343	0.	*	2	0404	843	0.	*	2	2044	1343	0.	*	3	1324	1843
1	1126	344	0.	*	2	0406	844	0.	*	2	2046	1344	0.	*	3	1326	1844
1	1128	345	0.	*	2	0408	845	0.	*	2	2048	1345	0.	*	3	1328	1845
1	1130	346	0.	*	2	0410	846	0.	*	2	2050	1346	0.	*	3	1330	1[illegible]
1	1132	347	0.	*	2	0412	847	0.	*	2	2052	1347	0.	*	3	1332	1[illegible]
1	1134	348	0.	*	2	0414	848	0.	*	2	2054	1348	0.	*	3	1334	1848
1	1136	349	0.	*	2	0416	849	0.	*	2	2056	1349	0.	*	3	1336	1849
1	1138	350	0.	*	2	0418	850	0.	*	2	2058	1350	0.	*	3	1338	1850
1	1140	351	0.	*	2	0420	851	0.	*	2	2100	1351	0.	*	3	1340	1851
1	1142	352	0.	*	2	0422	852	0.	*	2	2102	1352	0.	*	3	1342	1852
1	1144	353	0.	*	2	0424	853	0.	*	2	2104	1353	0.	*	3	1344	1853
1	1146	354	0.	*	2	0426	854	0.	*	2	2106	1354	0.	*	3	1346	1854
1	1148	355	0.	*	2	0428	855	0.	*	2	2108	1355	0.	*	3	1348	1855
1	1150	356	0.	*	2	0430	856	0.	*	2	2110	1356	0.	*	3	1350	1856
1	1152	357	0.	*	2	0432	857	0.	*	2	2112	1357	0.	*	3	1352	1857
1	1154	358	0.	*	2	0434	858	0.	*	2	2114	1358	0.	*	3	1354	1858
1	1156	359	0.	*	2	0436	859	0.	*	2	2116	1359	0.	*	3	1356	1859
1	1158	360	0.	*	2	0438	860	0.	*	2	2118	1360	0.	*	3	1358	1860
1	1200	361	0.	*	2	0440	861	0.	*	2	2120	1361	0.	*	3	1400	1861
1	1202	362	0.	*	2	0442	862	0.	*	2	2122	1362	0.	*	3	1402	1862
1	1204	363	0.	*	2	0444	863	0.	*	2	2124	1363	0.	*	3	1404	1863
1	1206	364	0.	*	2	0446	864	0.	*	2	2126	1364	0.	*	3	1406	1864
1	1208	365	0.	*	2	0448	865	0.	*	2	2128	1365	0.	*	3	1408	1865
1	1210	366	0.	*	2	0450	866	0.	*	2	2130	1366	0.	*	3	1410	1866
1	1212	367	0.	*	2	0452	867	0.	*	2	2132	1367	0.	*	3	1412	1867
1	1214	368	0.	*	2	0454	868	0.	*	2	2134	1368	0.	*	3	1414	1868
1	1216	369	10.	*	2	0456	869	0.	*	2	2136	1369	0.	*	3	1416	1869
1	1218	370	22.	*	2	0458	870	0.	*	2	2138	1370	0.	*	3	1418	1870
1	1220	371	73.	*	2	0500	871	0.	*	2	2140	1371	0.	*	3	1420	1871
1	1222	372	116.	*	2	0502	872	0.	*	2	2142	1372	0.	*	3	1422	1872
1	1224	373	141.	*	2	0504	873	0.	*	2	2144	1373	0.	*	3	1424	1873
1	1226	374	154.	*	2	0506	874	0.	*	2	2146	1374	0.	*	3	1426	1874
1	1228	375	157.	*	2	0508	875	0.	*	2	2148	1375	0.	*	3	1428	1875
1	1230	376	155.	*	2	0510	876	0.	*	2	2150	1376	0.	*	3	1430	1876
1	1232	377	149.	*	2	0512	877	0.	*	2	2152	1377	0.	*	3	1432	1877
1	1234	378	138.	*	2	0514	878	0.	*	2	2154	1378	0.	*	3	1434	1878
1	1236	379	122.	*	2	0516	879	0.	*	2	2156	1379	0.	*	3	1436	1879
1	1238	380	100.	*	2	0518	880	0.	*	2	2158	1380	0.	*	3	1438	1880
1	1240	381	75.	*	2	0520	881	0.	*	2	2200	1381	0.	*	3	1440	18[illegible]
1	1242	382	56.	*	2	0522	882	0.	*	2	2202	1382	0.	*	3	1442	1[illegible]
1	1244	383	42.	*	2	0524	883	0.	*	2	2204	1383	0.	*	3	1444	1[illegible]
1	1246	384	30.	*	2	0526	884	0.	*	2	2206	1384	0.	*	3	1446	1884
1	1248	385	25.	*	2	0528	885	0.	*	2	2208	1385	0.	*	3	1448	1885
1	1250	386	23.	*	2	0530	886	0.	*	2	2210	1386	0.	*	3	1450	1886
1	1252	387	22.	*	2	0532	887	0.	*	2	2212	1387	0.	*	3	1452	1887
1	1254	388	21.	*	2	0534	888	0.	*	2	2214	1388	0.	*	3	1454	1888
1	1256	389	20.	*	2	0536	889	0.	*	2	2216	1389	0.	*	3	1456	1889
1	1258	390	19.	*	2	0538	890	0.	*	2	2218	1390	0.	*	3	1458	1890
1	1300	391	18.	*	2	0540	891	0.	*	2	2220	1391	0.	*	3	1500	1891
1	1302	392	17.	*	2	0542	892	0.	*	2	2222	1392	0.	*	3	1502	1892
1	1304	393	17.	*	2	0544	893	0.	*	2	2224	1393	0.	*	3	1504	1893
1	1306	394	16.	*	2	0546	894	0.	*	2	2226	1394	0.	*	3	1506	1894
1	1308	395	15.	*	2	0548	895	0.	*	2	2228	1395	0.	*	3	1508	1895
1	1310	396	14.	*	2	0550	896	0.	*	2	2230	1396	0.	*	3	1510	1896
1	1312	397	14.	*	2	0552	897	0.	*	2	2232	1397	0.	*	3	1512	1897
1	1314	398	13.	*	2	0554	898	0.	*	2	2234	1398	0.	*	3	1514	1898
1	1316	399	12.	*	2	0556	899	0.	*	2	2236	1399	0.	*	3	1516	1899
1	1318	400	12.	*	2	0558	900	0.	*	2	2238	1400	0.	*	3	1518	1900
1	1320	401	11.	*	2	0600	901	0.	*	2	2240	1401	0.	*	3	1520	1901
1	1322	402	11.	*	2	0602	902	0.	*	2	2242	1402	0.	*	3	1522	1902
1	1324	403	10.	*	2	0604	903	0.	*	2	2244	1403	0.	*	3	1524	1903
1	1326	404	10.	*	2	0606	904	0.	*	2	2246	1404	0.	*	3	1526	1904
1	1328	405	9.	*	2	0608	905	0.	*	2	2248	1405	0.	*	3	1528	1905
1	1330	406	9.	*	2	0610	906	0.	*	2	2250	1406	0.	*	3	1530	1906
1	1332	407	8.	*	2	0612	907	0.	*	2	2252	1407	0.	*	3	1532	1907
1	1334	408	8.	*	2	0614	908	0.	*	2	2254	1408	0.	*	3	1534	1908
1	1336	409	7.	*	2	0616	909	0.	*	2	2256	1409	0.	*	3	1536	1909
1	1338	410	7.	*	2	0618	910	0.	*	2	2258	1410	0.	*	3	1538	1910
1	1340	411	7.	*	2	0620	911	0.	*	2	2300	1411	0.	*	3	1540	1911
1	1342	412	6.	*	2	0622	912	0.	*	2	2302	1412	0.	*	3	1542	1912
1	1344	413	6.	*	2	0624	913	0.	*	2	2304	1413	0.	*	3	1544	1913
1	1346	414	6.	*	2	0626	914	0.	*	2	2306	1414	0.	*	3	1546	1914
1	1348	415	6.	*	2	0628	915	0.	*	2	2308	1415	0.	*	3	1548	1915
1	1350	416	5.	*	2	0630	916	0.	*	2	2310	1416	0.	*	3	1550	1916
1	1352	417	5.	*	2	0632	917	0.	*	2	2312	1417	0.	*	3	1552	19[illegible]
1	1354	418	5.	*	2	0634	918	0.	*	2	2314	1418	0.	*	3	1554	1[illegible]
1	1356	419	5.	*	2	0636	919	0.	*	2	2316	1419	0.	*	3	1556	19[illegible]
1	1358	420	4.	*	2	0638	920	0.	*	2	2318	1420	0.	*	3	1558	1920
1	1400	421	4.	*	2	0640	921	0.	*	2	2320	1421	0.	*	3	1600	1921
1	1402	422	4.	*	2	0642	922	0.	*	2	2322	1422	0.	*	3	1602	1922
1	1404	423	4.	*	2	0644	923	0.	*	2	2324	1423	0.	*	3	1604	1923
1	1406	424	4.	*	2	0646	924	0.	*	2	2326	1424	0.	*	3	1606	1924
1	1408	425	3.	*	2	0648	925	0.	*	2	2328	1425	0.	*	3	1608	1925

1	1410	426	3.	*	2	0650	926	0.	*	2	2330	1426	0.	*	3	1610	1926
1	1412	427	3.	*	2	0652	927	0.	*	2	2332	1427	0.	*	3	1612	1927
1	1414	428	3.	*	2	0654	928	0.	*	2	2334	1428	0.	*	3	1614	1928
1	1416	429	3.	*	2	0656	929	0.	*	2	2336	1429	0.	*	3	1616	1929
1	1418	430	3.	*	2	0658	930	0.	*	2	2338	1430	0.	*	3	1618	1930
1	1420	431	3.	*	2	0700	931	0.	*	2	2340	1431	0.	*	3	1620	1931
1	1422	432	2.	*	2	0702	932	0.	*	2	2342	1432	0.	*	3	1622	1932
1	1424	433	2.	*	2	0704	933	0.	*	2	2344	1433	0.	*	3	1624	1933
1	1426	434	2.	*	2	0706	934	0.	*	2	2346	1434	0.	*	3	1626	1934
1	1428	435	2.	*	2	0708	935	0.	*	2	2348	1435	0.	*	3	1628	1935
1	1430	436	2.	*	2	0710	936	0.	*	2	2350	1436	0.	*	3	1630	1936
1	1432	437	2.	*	2	0712	937	0.	*	2	2352	1437	0.	*	3	1632	1937
1	1434	438	2.	*	2	0714	938	0.	*	2	2354	1438	0.	*	3	1634	1938
1	1436	439	2.	*	2	0716	939	0.	*	2	2356	1439	0.	*	3	1636	1939
1	1438	440	2.	*	2	0718	940	0.	*	2	2358	1440	0.	*	3	1638	1940
1	1440	441	2.	*	2	0720	941	0.	*	3	0000	1441	0.	*	3	1640	1941
1	1442	442	1.	*	2	0722	942	0.	*	3	0002	1442	0.	*	3	1642	1942
1	1444	443	1.	*	2	0724	943	0.	*	3	0004	1443	0.	*	3	1644	1943
1	1446	444	1.	*	2	0726	944	0.	*	3	0006	1444	0.	*	3	1646	1944
1	1448	445	1.	*	2	0728	945	0.	*	3	0008	1445	0.	*	3	1648	1945
1	1450	446	1.	*	2	0730	946	0.	*	3	0010	1446	0.	*	3	1650	1946
1	1452	447	1.	*	2	0732	947	0.	*	3	0012	1447	0.	*	3	1652	1947
1	1454	448	1.	*	2	0734	948	0.	*	3	0014	1448	0.	*	3	1654	1948
1	1456	449	1.	*	2	0736	949	0.	*	3	0016	1449	0.	*	3	1656	1949
1	1458	450	1.	*	2	0738	950	0.	*	3	0018	1450	0.	*	3	1658	1950
1	1500	451	1.	*	2	0740	951	0.	*	3	0020	1451	0.	*	3	1700	1951
1	1502	452	1.	*	2	0742	952	0.	*	3	0022	1452	0.	*	3	1702	1952
1	1504	453	1.	*	2	0744	953	0.	*	3	0024	1453	0.	*	3	1704	1953
1	1506	454	1.	*	2	0746	954	0.	*	3	0026	1454	0.	*	3	1706	1954
1	1508	455	1.	*	2	0748	955	0.	*	3	0028	1455	0.	*	3	1708	1955
1	1510	456	1.	*	2	0750	956	0.	*	3	0030	1456	0.	*	3	1710	1956
1	1512	457	1.	*	2	0752	957	0.	*	3	0032	1457	0.	*	3	1712	1957
1	1514	458	1.	*	2	0754	958	0.	*	3	0034	1458	0.	*	3	1714	1958
1	1516	459	1.	*	2	0756	959	0.	*	3	0036	1459	0.	*	3	1716	1959
1	1518	460	1.	*	2	0758	960	0.	*	3	0038	1460	0.	*	3	1718	1960
1	1520	461	1.	*	2	0800	961	0.	*	3	0040	1461	0.	*	3	1720	1961
1	1522	462	1.	*	2	0802	962	0.	*	3	0042	1462	0.	*	3	1722	1962
1	1524	463	1.	*	2	0804	963	0.	*	3	0044	1463	0.	*	3	1724	1963
1	1526	464	0.	*	2	0806	964	0.	*	3	0046	1464	0.	*	3	1726	1964
1	1528	465	0.	*	2	0808	965	0.	*	3	0048	1465	0.	*	3	1728	1965
1	1530	466	0.	*	2	0810	966	0.	*	3	0050	1466	0.	*	3	1730	1966
1	1532	467	0.	*	2	0812	967	0.	*	3	0052	1467	0.	*	3	1732	1967
1	1534	468	0.	*	2	0814	968	0.	*	3	0054	1468	0.	*	3	1734	1968
1	1536	469	0.	*	2	0816	969	0.	*	3	0056	1469	0.	*	3	1736	1969
1	1538	470	0.	*	2	0818	970	0.	*	3	0058	1470	0.	*	3	1738	1970
1	1540	471	0.	*	2	0820	971	0.	*	3	0100	1471	0.	*	3	1740	1971
1	1542	472	0.	*	2	0822	972	0.	*	3	0102	1472	0.	*	3	1742	1972
1	1544	473	0.	*	2	0824	973	0.	*	3	0104	1473	0.	*	3	1744	1973
1	1546	474	0.	*	2	0826	974	0.	*	3	0106	1474	0.	*	3	1746	1974
1	1548	475	0.	*	2	0828	975	0.	*	3	0108	1475	0.	*	3	1748	1975
1	1550	476	0.	*	2	0830	976	0.	*	3	0110	1476	0.	*	3	1750	1976
1	1552	477	0.	*	2	0832	977	0.	*	3	0112	1477	0.	*	3	1752	1977
1	1554	478	0.	*	2	0834	978	0.	*	3	0114	1478	0.	*	3	1754	1978
1	1556	479	0.	*	2	0836	979	0.	*	3	0116	1479	0.	*	3	1756	1979
1	1558	480	0.	*	2	0838	980	0.	*	3	0118	1480	0.	*	3	1758	1980
1	1600	481	0.	*	2	0840	981	0.	*	3	0120	1481	0.	*	3	1800	1981
1	1602	482	0.	*	2	0842	982	0.	*	3	0122	1482	0.	*	3	1802	1982
1	1604	483	0.	*	2	0844	983	0.	*	3	0124	1483	0.	*	3	1804	1983
1	1606	484	0.	*	2	0846	984	0.	*	3	0126	1484	0.	*	3	1806	1984
1	1608	485	0.	*	2	0848	985	0.	*	3	0128	1485	0.	*	3	1808	1985
1	1610	486	0.	*	2	0850	986	0.	*	3	0130	1486	0.	*	3	1810	1986
1	1612	487	0.	*	2	0852	987	0.	*	3	0132	1487	0.	*	3	1812	1987
1	1614	488	0.	*	2	0854	988	0.	*	3	0134	1488	0.	*	3	1814	1988
1	1616	489	0.	*	2	0856	989	0.	*	3	0136	1489	0.	*	3	1816	1989
1	1618	490	0.	*	2	0858	990	0.	*	3	0138	1490	0.	*	3	1818	1990
1	1620	491	0.	*	2	0900	991	0.	*	3	0140	1491	0.	*	3	1820	1991
1	1622	492	0.	*	2	0902	992	0.	*	3	0142	1492	0.	*	3	1822	1992
1	1624	493	0.	*	2	0904	993	0.	*	3	0144	1493	0.	*	3	1824	1993
1	1626	494	0.	*	2	0906	994	0.	*	3	0146	1494	0.	*	3	1826	1994
1	1628	495	0.	*	2	0908	995	0.	*	3	0148	1495	0.	*	3	1828	1995
1	1630	496	0.	*	2	0910	996	0.	*	3	0150	1496	0.	*	3	1830	1996
1	1632	497	0.	*	2	0912	997	0.	*	3	0152	1497	0.	*	3	1832	1997
1	1634	498	0.	*	2	0914	998	0.	*	3	0154	1498	0.	*	3	1834	1998
1	1636	499	0.	*	2	0916	999	0.	*	3	0156	1499	0.	*	3	1836	1999
1	1638	500	0.	*	2	0918	1000	0.	*	3	0158	1500	0.	*	3	1838	2000
				*					*					*			

****

PEAK FLOW	TIME	MAXIMUM AVERAGE FLOW			
		6-HR	24-HR	72-HR	66.63-HR
+ (CFS)	(HR)				
		(CFS)			
+ 157.	12.47	11.	3.	1.	1.
		(INCHES) .067	.067	.067	.067

(AC-FT) 6. 6. 6. 6.

CUMULATIVE AREA = 1.59 SQ MI

1

RUNOFF SUMMARY
FLOW IN CUBIC FEET PER SECOND
TIME IN HOURS, AREA IN SQUARE MILES

	OPERATION	STATION	PEAK FLOW	TIME OF PEAK	AVERAGE FLOW FOR MAXIMUM PERIOD 6-HOUR	24-HOUR	72-HOUR	BASIN AREA	MAXIMUM STAGE	TIM MAX
+	HYDROGRAPH AT	10	972.	12.27	119.	33.	12.	.69		
+	ROUTED TO	R10	903.	12.40	119.	33.	12.	.69		
+	ROUTED TO	R12	845.	12.60	118.	33.	12.	.69		
+	HYDROGRAPH AT	20	1103.	12.23	165.	45.	16.	1.17		
+	DIVERSION TO	BS20	1103.	12.23	92.	24.	9.	1.17		
+	HYDROGRAPH AT	D20	839.	12.50	79.	21.	8.	1.17		
+	HYDROGRAPH AT	RT20	1103.	12.23	92.	24.	9.	1.17		
+	ROUTED TO	S20	16.	12.50	15.	12.	7.	1.17		
+	3 COMBINED AT	C20	1554.	12.57	207.	63.	26.	1.86		
+	ROUTED TO	R20	1554.	12.57	207.	63.	26.	1.86		
+	HYDROGRAPH AT	40	2753.	12.30	286.	79.	28.	2.23		
+	DIVERSION TO	BS40	1789.	12.13	72.	20.	7.	2.23		
+	HYDROGRAPH AT	D40	2753.	12.30	227.	59.	21.	2.23		
+	HYDROGRAPH AT	RT40	1789.	12.13	72.	20.	7.	2.23		
+	ROUTED TO	S40	13.	12.20	12.	10.	6.	2.23		
+	3 COMBINED AT	C40	3088.	12.33	437.	129.	52.	4.08		
+	HYDROGRAPH AT	60	1654.	12.40	244.	66.	24.	1.75		
+	DIVERSION TO	BS60	11.	9.17	7.	2.	1.	1.75		
+	HYDROGRAPH AT	D60	1654.	12.40	244.	64.	23.	1.75		
+	HYDROGRAPH AT	RT60	11.	9.17	7.	2.	1.	1.75		
+	ROUTED TO	SB60	2.	9.33	2.	1.	1.	1.75		
+	3 COMBINED AT	C60	4599.	12.33	665.	190.	75.	5.84		
+	ROUTED TO	S60	101.	14.77	101.	98.	54.	5.84		
+	ROUTED TO	R60	101.	14.77	101.	98.	53.	5.84		

	ROUTED TO						
+		RR60	101.	14.87	101.	98.	53.	5.84
	HYDROGRAPH AT						
		80	1951.	12.13	199.	53.	19.	1.49
	DIVERSION TO						
+		BS80	945.	11.93	35.	10.	3.	1.49
	HYDROGRAPH AT						
+		D80	1951.	12.13	170.	43.	16.	1.49
	HYDROGRAPH AT						
+		RT80	945.	11.93	35.	10.	3.	1.49
	ROUTED TO						
+		S80	7.	12.00	6.	5.	3.	1.49
	2 COMBINED AT						
+		C80	1958.	12.13	176.	48.	19.	1.49
	2 COMBINED AT						
+		CC80	1958.	12.13	264.	144.	75.	1.49
	ROUTED TO						
+		R80	1950.	12.17	263.	144.	75.	1.49
	HYDROGRAPH AT						
+		100	453.	12.20	66.	18.	6.	.49
	DIVERSION TO						
+		BS100	422.	12.13	19.	5.	2.	.49
	HYDROGRAPH AT						
+		D100	453.	12.20	50.	13.	5.	.49
	HYDROGRAPH AT						
+		RT100	422.	12.13	19.	5.	2.	.49
	ROUTED TO						
+		S100	4.	12.20	3.	3.	2.	.49
	3 COMBINED AT						
+		C100	2352.	12.20	314.	159.	80.	1.98
	ROUTED TO						
+		R100	2303.	12.23	313.	159.	80.	1.98
	HYDROGRAPH AT						
+		120	3345.	12.27	342.	93.	34.	2.20
	DIVERSION TO						
+		BS120	13.	7.50	10.	3.	1.	2.20
	HYDROGRAPH AT						
+		D120	3345.	12.27	342.	90.	33.	2.20
	HYDROGRAPH AT						
+		RT120	13.	7.50	10.	3.	1.	2.20
	ROUTED TO						
+		S120	2.	8.00	2.	2.	1.	2.20
	3 COMBINED AT						
+		C120	5561.	12.23	633.	242.	112.	4.18
	ROUTED TO						
+		R120	5512.	12.27	633.	242.	111.	4.18
	HYDROGRAPH AT						
+		140	665.	12.13	67.	18.	6.	.60
	DIVERSION TO						
+		BS140	369.	11.97	11.	3.	1.	.60
	HYDROGRAPH AT						
+		D140	665.	12.13	58.	15.	5.	.60
	HYDROGRAPH AT						
+		RT140	369.	11.97	11.	3.	1.	.60
	ROUTED TO						
+		S140	2.	12.03	2.	2.	1.	.60

	3 COMBINED AT							
+		C140	6028.	12.27	687.	257.	117.	4.78
	HYDROGRAPH AT							
+		150	593.	12.17	51.	14.	5.	.41
	ROUTED TO							
+		R150	567.	12.23	51.	14.	5.	.41
	ROUTED TO							
+		R152	513.	12.33	51.	14.	5.	.41
	HYDROGRAPH AT							
+		160	224.	12.40	36.	9.	3.	.37
	DIVERSION TO							
+		BS160	82.	12.13	2.	1.	0.	.37
	HYDROGRAPH AT							
+		D160	224.	12.40	34.	9.	3.	.37
	HYDROGRAPH AT							
+		RT160	82.	12.13	2.	1.	0.	.37
	ROUTED TO							
+		S160	1.	12.20	1.	1.	0.	.37
	3 COMBINED AT							
+		C160	732.	12.37	86.	23.	8.	.77
	HYDROGRAPH AT							
+		180	851.	12.37	98.	25.	9.	1.01
	3 COMBINED AT							
+		C180	7186.	12.27	850.	298.	131.	6.56
	HYDROGRAPH AT							
+		210	1322.	12.17	111.	29.	10.	.79
	ROUTED TO							
+		R210	1246.	12.23	111.	29.	10.	.79
	HYDROGRAPH AT							
+		240	1513.	12.30	167.	42.	15.	1.41
	2 COMBINED AT							
+		C240	2684.	12.27	273.	70.	25.	2.20
	ROUTED TO							
+		S240	799.	12.70	226.	59.	21.	2.20
	ROUTED TO							
+		R240	795.	12.77	225.	59.	21.	2.20
	HYDROGRAPH AT							
+		220	676.	12.20	68.	18.	6.	.47
	2 COMBINED AT							
+		C220	955.	12.60	288.	75.	27.	2.67
	ROUTED TO							
+		SW220	895.	12.80	280.	73.	26.	2.67
	ROUTED TO							
+		R220	893.	12.87	280.	73.	26.	2.67
	HYDROGRAPH AT							
+		190	1471.	12.17	123.	33.	12.	.92
	ROUTED TO							
+		R190	1415.	12.23	123.	33.	12.	.92
	ROUTED TO							
+		R192	1359.	12.30	123.	33.	12.	.92
	HYDROGRAPH AT							
+		200	831.	12.17	72.	20.	7.	.53
	3 COMBINED AT							
+		C200	2264.	12.30	459.	122.	44.	4.12
	ROUTED TO							
+		SW200	2144.	12.37	454.	119.	43.	4.12

	ROUTED TO						
+	R200	2135.	12.37	454.	119.	43.	4.12
	ROUTED TO						
	SS200	1364.	12.73	333.	88.	32.	4.12
	ROUTED TO						
+	RR200	1343.	12.83	331.	88.	32.	4.12
	2 COMBINED AT						
+	CC180	7186.	12.27	1159.	382.	161.	10.68
	ROUTED TO						
+	S180	124.	24.43	124.	124.	88.	10.68
	ROUTED TO						
+	R180	124.	24.47	124.	124.	88.	10.68
	HYDROGRAPH AT						
+	260	427.	12.10	42.	11.	4.	.26
	2 COMBINED AT						
+	C260	428.	12.10	139.	130.	102.	.26
	ROUTED TO						
+	R260	411.	12.20	139.	130.	102.	.26
	HYDROGRAPH AT						
+	280	527.	12.10	46.	13.	5.	.32
	2 COMBINED AT						
+	C280	893.	12.13	180.	140.	106.	.58
	ROUTED TO						
+	R280	870.	12.20	179.	140.	106.	.58
	HYDROGRAPH AT						
+	300	428.	12.10	37.	11.	4.	.29
	2 COMBINED AT						
	C300	1235.	12.17	213.	149.	110.	.87
	ROUTED TO						
+	R300	1189.	12.23	212.	149.	109.	.87
	HYDROGRAPH AT						
+	305A	394.	12.13	41.	11.	4.	.32
	2 COMBINED AT						
+	C305	1534.	12.20	249.	158.	113.	1.19
	ROUTED TO						
+	R305	1520.	12.23	249.	158.	113.	1.19
	HYDROGRAPH AT						
+	320B1	659.	12.13	66.	19.	7.	.45
	DIVERSION TO						
+	B320B1	364.	11.93	16.	5.	2.	.45
	HYDROGRAPH AT						
+	D320B1	659.	12.13	54.	14.	5.	.45
	HYDROGRAPH AT						
+	T320B1	364.	11.93	16.	5.	2.	.45
	ROUTED TO						
+	S320B1	4.	12.00	3.	3.	2.	.45
	3 COMBINED AT						
+	C320B1	2042.	12.20	303.	174.	118.	1.64
	HYDROGRAPH AT						
+	350	1315.	12.20	112.	29.	11.	1.00
	DIVERSION TO						
+	SF350	658.	12.20	56.	15.	5.	1.00
	HYDROGRAPH AT						
+	D350	658.	12.20	56.	15.	5.	1.00
	ROUTED TO						
+	R350	593.	12.40	56.	15.	5.	1.00

	HYDROGRAPH AT							
+		310	381.	12.33	50.	13.	5.	.54
	2 COMBINED AT							
+		C310	950.	12.37	106.	27.	10.	1.04
	ROUTED TO							
+		R310	865.	12.67	106.	27.	10.	1.04
	HYDROGRAPH AT							
+		305B	333.	12.33	40.	10.	4.	.39
	ROUTED TO							
+		R305B	317.	12.43	40.	10.	4.	.39
	HYDROGRAPH AT							
+		320B2	251.	12.13	27.	7.	3.	.22
	DIVERSION TO							
+		B320B2	177.	12.00	6.	2.	1.	.22
	HYDROGRAPH AT							
+		D320B2	251.	12.13	22.	6.	2.	.22
	HYDROGRAPH AT							
+		T320B2	177.	12.00	6.	2.	1.	.22
	ROUTED TO							
+		S320B2	1.	12.03	1.	1.	1.	.22
	4 COMBINED AT							
+		C320B2	1150.	12.63	167.	43.	16.	1.65
	ROUTED TO							
+		R320B2	1144.	12.67	167.	43.	16.	1.65
	HYDROGRAPH AT							
+		340B	497.	12.07	41.	12.	4.	.29
	DIVERSION TO							
+		BS340B	497.	12.07	29.	8.	3.	.29
	HYDROGRAPH AT							
+		D340B	286.	12.20	15.	4.	2.	.29
	HYDROGRAPH AT							
+		RT340B	497.	12.07	29.	8.	3.	.29
	ROUTED TO							
+		S340B	5.	12.20	5.	4.	3.	.29
	3 COMBINED AT							
+		C340B	1166.	12.67	185.	50.	20.	1.94
	DIVERSION TO							
+		BS340	966.	12.67	113.	28.	10.	1.94
	HYDROGRAPH AT							
+		DD340B	200.	12.10	71.	22.	10.	1.94
	HYDROGRAPH AT							
+		RT340	966.	12.67	113.	28.	10.	1.94
	ROUTED TO							
+		SS340B	48.	13.40	41.	24.	10.	1.94
	2 COMBINED AT							
+		CD340B	248.	13.40	109.	46.	20.	1.94
	HYDROGRAPH AT							
+		RT350	658.	12.20	56.	15.	5.	1.00
	ROUTED TO							
+		RR350	570.	12.43	56.	15.	5.	1.00
	HYDROGRAPH AT							
+		355	546.	12.33	75.	19.	7.	.68
	2 COMBINED AT							
+		C355	1061.	12.40	130.	34.	12.	1.17
	DIVERSION TO							
+		BS355	611.	12.40	40.	10.	4.	1.17

	HYDROGRAPH AT							
+		D355	450.	12.13	90.	24.	9.	1.17
	HYDROGRAPH AT							
		RT355	611.	12.40	40.	10.	4.	1.17
	ROUTED TO							
+		S355	40.	12.77	26.	10.	4.	1.17
	2 COMBINED AT							
+		CC355	490.	12.77	115.	34.	12.	1.17
	ROUTED TO							
+		R355	478.	12.77	115.	34.	12.	1.17
	2 COMBINED AT							
+		CC340B	707.	12.77	220.	78.	31.	3.11
	ROUTED TO							
+		R340B	703.	12.80	219.	78.	31.	3.11
	HYDROGRAPH AT							
+		340A2	72.	12.03	8.	3.	1.	.04
	DIVERSION TO							
+		B340A2	64.	11.97	4.	1.	0.	.04
	HYDROGRAPH AT							
+		D340A2	72.	12.03	5.	1.	1.	.04
	HYDROGRAPH AT							
+		T340A2	64.	11.97	4.	1.	0.	.04
	ROUTED TO							
+		S340A2	1.	12.03	1.	1.	0.	.04
	3 COMBINED AT							
+		C340A2	710.	12.80	225.	80.	32.	3.15
	ROUTED TO							
		R340A2	703.	12.93	225.	80.	32.	3.15
	2 COMBINED AT							
+		CC320B	2211.	12.23	516.	250.	147.	4.79
	ROUTED TO							
+		R320B	2204.	12.23	515.	250.	147.	4.79
	HYDROGRAPH AT							
+		320A	315.	12.13	40.	12.	4.	.27
	DIVERSION TO							
+		BS320A	315.	12.13	22.	6.	2.	.27
	HYDROGRAPH AT							
+		D320A	267.	12.27	22.	6.	2.	.27
	HYDROGRAPH AT							
+		RT320A	315.	12.13	22.	6.	2.	.27
	ROUTED TO							
+		S320A	4.	12.27	3.	3.	2.	.27
	3 COMBINED AT							
+		C320	2378.	12.30	538.	258.	151.	5.06
	HYDROGRAPH AT							
+		340A1	1254.	12.17	154.	46.	17.	1.09
	DIVERSION TO							
+		B340A1	1254.	12.17	154.	46.	17.	1.09
	HYDROGRAPH AT							
+		D340A1	0.	.00	0.	0.	0.	1.09
	HYDROGRAPH AT							
+		T340A1	1254.	12.17	154.	46.	17.	1.09
	ROUTED TO							
+		S340A1	18.	15.30	18.	16.	12.	1.09
	2 COMBINED AT							
+		C340A1	18.	15.30	18.	16.	12.	1.09

+	2 COMBINED AT	C340	2378.	12.30	552.	273.	161.	6.15
+	HYDROGRAPH AT	360	840.	12.20	122.	36.	13.	.88
+	DIVERSION TO	BS360	840.	12.20	93.	25.	9.	.88
+	HYDROGRAPH AT	D360	366.	12.67	40.	12.	4.	.88
+	HYDROGRAPH AT	RT360	840.	12.20	93.	25.	9.	.88
+	ROUTED TO	S360	15.	12.67	15.	12.	8.	.88
+	3 COMBINED AT	C360	2378.	12.30	596.	294.	172.	7.03
+	HYDROGRAPH AT	380A	322.	12.27	33.	10.	4.	.26
+	2 COMBINED AT	C380A	2639.	12.30	617.	299.	173.	7.29
+	HYDROGRAPH AT	400A	56.	12.20	4.	1.	0.	.05
+	2 COMBINED AT	C400A	2676.	12.30	621.	300.	173.	7.34
+	HYDROGRAPH AT	370	817.	12.23	83.	22.	8.	.67
+	ROUTED TO	S370	374.	12.53	83.	22.	8.	.67
+	DIVERSION TO	B370W	335.	12.53	74.	20.	7.	.67
+	HYDROGRAPH AT	D370	39.	12.53	8.	2.	1.	.67
+	ROUTED TO	R370S	38.	12.90	8.	2.	1.	.67
+	HYDROGRAPH AT	380B1	329.	12.20	47.	14.	5.	.37
+	DIVERSION TO	B380B1	329.	12.20	19.	5.	2.	.37
+	HYDROGRAPH AT	D380B1	312.	12.27	31.	8.	3.	.37
+	HYDROGRAPH AT	T380B1	329.	12.20	19.	5.	2.	.37
+	ROUTED TO	S380B1	3.	12.27	3.	3.	2.	.37
+	3 COMBINED AT	C380B1	315.	12.27	42.	13.	6.	1.04
+	ROUTED TO	R380B1	287.	12.43	42.	13.	6.	1.04
+	HYDROGRAPH AT	400B1	440.	12.13	45.	13.	5.	.38
+	DIVERSION TO	B400B1	239.	11.97	10.	3.	1.	.38
+	HYDROGRAPH AT	D400B1	440.	12.13	37.	10.	3.	.38
+	HYDROGRAPH AT	T400B1	239.	11.97	10.	3.	1.	.38
+	ROUTED TO	S400B1	2.	12.03	2.	2.	1.	.38

	2 COMBINED AT							
+		C400B1	442.	12.13	39.	11.	5.	.38
	3 COMBINED AT							
		CC400B	2957.	12.30	684.	319.	180.	8.76
	HYDROGRAPH AT							
+		420A2	31.	12.07	2.	1.	0.	.02
	2 COMBINED AT							
+		C400A2	2967.	12.30	685.	319.	180.	8.78
	HYDROGRAPH AT							
+		T370W	335.	12.53	74.	20.	7.	.67
	ROUTED TO							
+		R370W	331.	12.73	74.	20.	7.	.67
	HYDROGRAPH AT							
+		395A	191.	12.13	25.	7.	2.	.19
	ROUTED TO							
+		R390C1	189.	12.20	25.	7.	2.	.19
	HYDROGRAPH AT							
+		395B	6.	12.03	1.	0.	0.	.00
	ROUTED TO							
+		R390C2	5.	12.23	1.	0.	0.	.00
	HYDROGRAPH AT							
+		390C	226.	12.07	18.	5.	2.	.12
	3 COMBINED AT							
+		CP390C	379.	12.10	44.	12.	4.	.31
	DIVERSION TO							
+		TO390B	275.	12.10	22.	6.	2.	.31
	HYDROGRAPH AT							
		TOC-H	104.	12.10	21.	7.	2.	.31
	2 COMBINED AT							
+		C370	383.	12.67	95.	26.	10.	1.30
	ROUTED TO							
+		R390S	382.	12.70	95.	26.	10.	1.30
	HYDROGRAPH AT							
+		400B3	39.	12.03	3.	1.	0.	.02
	DIVERSION TO							
+		B400B3	39.	12.03	3.	1.	0.	.02
	HYDROGRAPH AT							
+		D400B3	0.	.00	0.	0.	0.	.02
	HYDROGRAPH AT							
+		T400B3	39.	12.03	3.	1.	0.	.02
	ROUTED TO							
+		S400B3	1.	11.67	1.	1.	0.	.02
	2 COMBINED AT							
+		C400B3	1.	11.67	1.	1.	0.	.02
	2 COMBINED AT							
+		C390S	383.	12.70	96.	27.	10.	1.32
	HYDROGRAPH AT							
+		380B3	171.	12.10	16.	5.	2.	.12
	DIVERSION TO							
+		B380B3	170.	12.07	7.	2.	1.	.12
	HYDROGRAPH AT							
+		D380B3	162.	12.13	10.	3.	1.	.12
	HYDROGRAPH AT							
+		T380B3	170.	12.07	7.	2.	1.	.12
	ROUTED TO							
+		S380B3	2.	12.13	2.	1.	1.	.12

	2 COMBINED AT							
+		C380B3	164.	12.13	11.	4.	2.	.12
	DIVERSION TO							
+		380B3c	44.	12.13	3.	1.	0.	.12
	HYDROGRAPH AT							
+		D380B3	120.	12.13	8.	3.	1.	.12
	DIVERSION TO							
+		380B3a	62.	12.13	4.	1.	1.	.12
	HYDROGRAPH AT							
+		380B3b	57.	12.13	4.	1.	1.	.12
	2 COMBINED AT							
+		C380BB	390.	12.70	99.	28.	10.	1.45
	DIVERSION TO							
+		B38B3b	320.	12.70	65.	16.	6.	1.45
	HYDROGRAPH AT							
+		D380B	70.	11.90	34.	12.	4.	1.45
	HYDROGRAPH AT							
+		RT380B	320.	12.70	65.	16.	6.	1.45
	ROUTED TO							
+		S380B	61.	13.63	25.	15.	6.	1.45
	2 COMBINED AT							
+		CC380B	131.	13.63	56.	26.	10.	1.45
	ROUTED TO							
+		R38B3b	131.	13.67	56.	26.	10.	1.45
	HYDROGRAPH AT							
+		T38B3a	62.	12.13	4.	1.	1.	.12
	ROUTED TO							
+		R38B3a	50.	12.23	4.	1.	1.	.12
	HYDROGRAPH AT							
+		T38B3c	44.	12.13	3.	1.	0.	.12
	3 COMBINED AT							
+		C38B3c	156.	12.23	63.	28.	11.	1.45
	ROUTED TO							
+		R380B3	151.	12.33	63.	28.	11.	1.45
	HYDROGRAPH AT							
+		380B2	140.	12.07	12.	3.	1.	.10
	2 COMBINED AT							
+		C380B2	208.	12.27	74.	31.	13.	1.54
	ROUTED TO							
+		R380B2	205.	12.40	74.	31.	13.	1.54
	HYDROGRAPH AT							
+		400B2	205.	12.13	19.	5.	2.	.19
	2 COMBINED AT							
+		C400B2	394.	12.17	91.	36.	14.	1.74
	ROUTED TO							
+		R400B2	377.	12.27	91.	36.	14.	1.74
	HYDROGRAPH AT							
+		420A1	759.	12.13	74.	21.	8.	.57
	DIVERSION TO							
+		B420A1	477.	11.97	20.	6.	2.	.57
	HYDROGRAPH AT							
+		D420A1	759.	12.13	60.	16.	6.	.57
	HYDROGRAPH AT							
+		T420A1	477.	11.97	20.	6.	2.	.57
	ROUTED TO							
+		S420A1	4.	12.03	3.	3.	2.	.57

+	4 COMBINED AT C420A	3728.	12.23	812.	364.	197.	11.09
	HYDROGRAPH AT R390B	275.	12.10	22.	6.	2.	.31
+	ROUTED TO R390B1	277.	12.10	22.	6.	2.	.31
+	HYDROGRAPH AT 385C	647.	12.13	72.	20.	7.	.50
+	HYDROGRAPH AT 385B	103.	12.07	10.	3.	1.	.08
+	HYDROGRAPH AT 385A	23.	12.07	2.	1.	0.	.02
+	HYDROGRAPH AT 415B	442.	12.07	43.	13.	5.	.28
+	4 COMBINED AT CP415B	1205.	12.10	127.	36.	13.	.87
+	DIVERSION TO BS415B	1055.	12.10	79.	20.	7.	.87
+	HYDROGRAPH AT D415B	150.	11.70	48.	16.	6.	.87
+	HYDROGRAPH AT RT415B	1055.	12.10	79.	20.	7.	.87
+	ROUTED TO S415B	55.	12.70	42.	20.	7.	.87
+	2 COMBINED AT CC415B	205.	12.70	85.	34.	13.	.87
	ROUTED TO R390A1	205.	12.73	85.	34.	13.	.87
+	HYDROGRAPH AT 390A	33.	12.07	3.	1.	0.	.02
+	2 COMBINED AT CP390A	210.	12.47	88.	35.	13.	.90
+	ROUTED TO R390B2	210.	12.50	88.	35.	13.	.90
+	HYDROGRAPH AT 390B	139.	12.07	13.	4.	1.	.10
+	3 COMBINED AT CP390B	613.	12.10	122.	44.	16.	1.31
+	ROUTED TO S390B	519.	12.23	122.	44.	16.	1.31
+	HYDROGRAPH AT 420B05	62.	12.07	5.	2.	1.	.04
+	2 COMBINED AT CPSD05	559.	12.20	127.	45.	17.	1.35
+	HYDROGRAPH AT 420B10	26.	12.10	3.	1.	0.	.03
+	2 COMBINED AT CPSD10	581.	12.20	130.	46.	17.	1.37
+	HYDROGRAPH AT 420B15	10.	12.10	1.	0.	0.	.01
+	2 COMBINED AT CPSD15	589.	12.20	131.	46.	17.	1.39
+	HYDROGRAPH AT 420B20	12.	12.10	2.	1.	0.	.01
+	2 COMBINED AT CPSD20	600.	12.20	133.	47.	18.	1.40

	HYDROGRAPH AT							
+		420B25	37.	12.37	10.	3.	1.	.08
	ROUTED TO							
+		SFIRES	27.	12.80	10.	3.	1.	.08
	2 COMBINED AT							
+		CPSD25	615.	12.20	143.	49.	19.	1.48
	HYDROGRAPH AT							
+		420B30	46.	12.13	7.	2.	1.	.05
	2 COMBINED AT							
+		CPSD30	658.	12.20	149.	51.	19.	1.54
	HYDROGRAPH AT							
+		420B35	40.	12.07	4.	1.	0.	.04
	ROUTED TO							
+		SCHRCH	42.	12.17	4.	1.	0.	.04
	2 COMBINED AT							
+		CPSD35	694.	12.17	153.	52.	20.	1.57
	HYDROGRAPH AT							
+		420B40	6.	12.07	1.	0.	0.	.00
	2 COMBINED AT							
+		CPSD40	698.	12.17	154.	52.	20.	1.58
	HYDROGRAPH AT							
+		420B45	7.	12.07	1.	0.	0.	.01
	2 COMBINED AT							
+		CPSD45	704.	12.17	154.	53.	20.	1.59
	DIVERSION TO							
+		MCDB	302.	12.17	24.	6.	2.	1.59
	HYDROGRAPH AT							
+		TOLSCH	402.	12.17	131.	47.	18.	1.59
	HYDROGRAPH AT							
+		440	184.	12.03	12.	3.	1.	.08
	ROUTED TO							
+		R70	181.	12.07	12.	3.	1.	.08
	HYDROGRAPH AT							
+		441	16.	12.03	1.	0.	0.	.01
	2 COMBINED AT							
+		C108	197.	12.07	14.	4.	1.	.09
	DIVERSION TO							
+		SPLIT	98.	12.07	7.	2.	1.	.09
	HYDROGRAPH AT							
+		D4	98.	12.07	7.	2.	1.	.09
	ROUTED TO							
+		R108	92.	12.13	7.	2.	1.	.09
	HYDROGRAPH AT							
+		442	105.	12.10	9.	2.	1.	.10
	2 COMBINED AT							
+		C67	195.	12.10	16.	4.	2.	.19
	DIVERSION TO							
+		BASIN4	121.	12.10	6.	2.	1.	.19
	HYDROGRAPH AT							
+		D6	74.	12.10	10.	3.	1.	.19
	HYDROGRAPH AT							
+		RTD6	121.	12.10	6.	2.	1.	.19
	ROUTED TO							
+		SD6	1.	12.47	1.	1.	0.	.19
	2 COMBINED AT							
+		CD6	74.	12.10	10.	3.	1.	.19

	HYDROGRAPH AT							
+		443	151.	12.07	15.	4.	1.	.08
	DIVERSION TO							
		WSH66	78.	11.87	12.	3.	1.	.08
	HYDROGRAPH AT							
+		D66	73.	12.07	3.	1.	0.	.08
	ROUTED TO							
+		R113	71.	12.07	3.	1.	0.	.08
	2 COMBINED AT							
+		C114	144.	12.07	13.	4.	2.	.27
	HYDROGRAPH AT							
+		444	83.	12.03	5.	1.	0.	.04
	ROUTED TO							
+		R58	79.	12.07	5.	1.	0.	.04
	HYDROGRAPH AT							
+		445	307.	12.03	19.	5.	2.	.19
	2 COMBINED AT							
+		C107	382.	12.03	23.	6.	2.	.23
	ROUTED TO							
+		R107	382.	12.07	23.	6.	2.	.23
	HYDROGRAPH AT							
+		RTB2	98.	12.07	7.	2.	1.	.09
	ROUTED TO							
+		RSPLIT	98.	12.07	7.	2.	1.	.09
	HYDROGRAPH AT							
+		446	66.	12.03	6.	2.	1.	.04
	3 COMBINED AT							
		C109	545.	12.07	36.	10.	3.	.27
	DIVERSION TO							
+		WSH404	35.	11.70	8.	2.	1.	.27
	HYDROGRAPH AT							
+		D5	510.	12.07	28.	7.	3.	.27
	ROUTED TO							
+		R109	493.	12.10	28.	7.	3.	.27
	HYDROGRAPH AT							
+		447	141.	12.07	12.	4.	1.	.09
	HYDROGRAPH AT							
+		RT404	35.	11.70	8.	2.	1.	.27
	ROUTED TO							
+		R404	35.	11.83	8.	2.	1.	.27
	3 COMBINED AT							
+		C110	666.	12.07	48.	13.	5.	.36
	ROUTED TO							
+		R110	663.	12.10	48.	13.	5.	.36
	2 COMBINED AT							
+		C115	805.	12.07	61.	17.	7.	.63
	ROUTED TO							
+		R115	799.	12.10	61.	17.	7.	.63
	HYDROGRAPH AT							
+		448	89.	12.03	6.	2.	1.	.05
	HYDROGRAPH AT							
+		449	81.	12.03	5.	1.	0.	.05
	2 COMBINED AT							
+		C6364	170.	12.03	11.	3.	1.	.09
	ROUTED TO							
+		R6364	145.	12.17	11.	3.	1.	.09

+	HYDROGRAPH AT	450	63.	12.20	7.	2.	1.	.07
+	HYDROGRAPH AT	451	18.	12.17	2.	1.	0.	.03
+	2 COMBINED AT	C451	80.	12.20	9.	2.	1.	.09
+	HYDROGRAPH AT	RT66	78.	11.87	12.	3.	1.	.08
+	HYDROGRAPH AT	452	63.	12.03	5.	1.	0.	.04
+	2 COMBINED AT	C6465	141.	12.03	17.	4.	2.	.04
+	ROUTED TO	R6566	137.	12.10	17.	4.	2.	.04
+	3 COMBINED AT	C116	357.	12.17	36.	10.	3.	.23
+	ROUTED TO	BASIN5	159.	12.47	36.	10.	3.	.23
+	ROUTED TO	R116	157.	12.53	36.	10.	3.	.23
+	HYDROGRAPH AT	453	63.	12.10	7.	2.	1.	.06
+	2 COMBINED AT	C117	177.	12.47	43.	12.	4.	.29
+	2 COMBINED AT	C118	892.	12.10	104.	29.	11.	.92
+	ROUTED TO	R118	887.	12.13	104.	29.	11.	.92
+	DIVERSION TO	BASIN6	248.	12.13	7.	2.	1.	.92
+	HYDROGRAPH AT	D7	639.	12.13	97.	27.	10.	.92
+	HYDROGRAPH AT	RTD7	248.	12.13	7.	2.	1.	.92
+	ROUTED TO	SD7	1.	12.67	1.	1.	1.	.92
+	2 COMBINED AT	CD7	640.	12.13	97.	28.	11.	.92
+	HYDROGRAPH AT	454	162.	12.13	21.	6.	2.	.18
+	2 COMBINED AT	C454	801.	12.13	118.	34.	13.	1.10
+	ROUTED TO	R454	793.	12.23	118.	34.	13.	1.10
+	HYDROGRAPH AT	415A	267.	12.17	32.	9.	3.	.28
+	3 COMBINED AT	CP415A	1436.	12.20	275.	88.	33.	2.97
+	HYDROGRAPH AT	RMCDB	302.	12.17	24.	6.	2.	1.59
+	ROUTED TO	SMCDB	157.	12.47	11.	3.	1.	1.59
+	2 COMBINED AT	CPLSCH	1436.	12.20	285.	90.	34.	2.97
+	ROUTED TO	R415A	1423.	12.27	285.	90.	34.	2.97

	HYDROGRAPH AT						
+	455	1418.	12.13	150.	45.	16.	1.11
	DIVERSION TO						
	BS455	1418.	12.13	139.	37.	13.	1.11
	HYDROGRAPH AT						
+	D455	145.	12.80	24.	8.	3.	1.11
	HYDROGRAPH AT						
+	RT455	1418.	12.13	139.	37.	13.	1.11
	ROUTED TO						
+	S455	23.	12.80	22.	18.	11.	1.11
	2 COMBINED AT						
+	C455	169.	12.80	46.	26.	14.	1.11
	3 COMBINED AT						
+	CC455	5020.	12.23	1077.	457.	236.	15.16
	ROUTED TO						
+	S440	293.	23.23	291.	265.	171.	15.16
	ROUTED TO						
+	R455	293.	23.97	291.	265.	168.	15.16
	HYDROGRAPH AT						
+	480	1102.	12.10	100.	31.	11.	.73
	DIVERSION TO						
+	BS480	487.	11.90	27.	8.	3.	.73
	HYDROGRAPH AT						
+	D480	1102.	12.10	83.	23.	8.	.73
	HYDROGRAPH AT						
+	RT480	487.	11.90	27.	8.	3.	.73
	ROUTED TO						
+	S480	5.	11.97	5.	4.	3.	.73
	2 COMBINED AT						
+	C480	1107.	12.10	88.	27.	11.	.73
	2 COMBINED AT						
+	CC480	1107.	12.10	353.	315.	205.	.73
	ROUTED TO						
+	R480	907.	12.33	353.	315.	204.	.73
	HYDROGRAPH AT						
+	456	483.	12.07	37.	10.	4.	.26
	DIVERSION TO						
+	BASIN1	193.	12.07	8.	2.	1.	.26
	HYDROGRAPH AT						
+	D1	290.	12.07	29.	8.	3.	.26
	DIVERSION TO						
+	WA30	59.	12.07	10.	3.	1.	.26
	HYDROGRAPH AT						
+	CD2	231.	12.07	19.	5.	2.	.26
	ROUTED TO						
+	R456	218.	12.13	19.	5.	2.	.26
	HYDROGRAPH AT						
+	457	273.	12.07	21.	6.	2.	.19
	2 COMBINED AT						
+	C101	480.	12.10	40.	10.	4.	.45
	DIVERSION TO						
+	BASIN2	177.	12.10	8.	2.	1.	.45
	HYDROGRAPH AT						
+	D3	303.	12.10	32.	8.	3.	.45
	HYDROGRAPH AT						
+	RTD3	177.	12.10	8.	2.	1.	.45

	ROUTED TO						
+	SD3	1.	12.40	1.	1.	1.	.45
	2 COMBINED AT						
+	CD3	304.	12.10	33.	9.	4.	.45
	ROUTED TO						
+	R101	302.	12.10	33.	9.	4.	.45
	HYDROGRAPH AT						
+	458	366.	12.03	26.	7.	2.	.19
	2 COMBINED AT						
+	C103	655.	12.07	59.	16.	6.	.64
	ROUTED TO						
+	R103	651.	12.07	59.	16.	6.	.64
	HYDROGRAPH AT						
+	RT30	59.	12.07	10.	3.	1.	.26
	ROUTED TO						
+	R30	58.	12.10	10.	3.	1.	.26
	HYDROGRAPH AT						
+	RTB1	193.	12.07	8.	2.	1.	.26
	ROUTED TO						
+	B1	35.	12.20	8.	2.	1.	.26
	ROUTED TO						
+	RB1	35.	12.27	8.	2.	1.	.26
	2 COMBINED AT						
+	CDIV	87.	12.20	18.	5.	2.	.12
	HYDROGRAPH AT						
+	459	45.	12.03	3.	1.	0.	.03
	2 COMBINED AT						
+	C52	117.	12.10	21.	6.	2.	.15
	ROUTED TO						
+	R52	116.	12.17	21.	6.	2.	.15
	HYDROGRAPH AT						
+	460	221.	12.07	20.	6.	2.	.14
	2 COMBINED AT						
+	C102	323.	12.07	40.	12.	4.	.29
	ROUTED TO						
+	BASIN3	71.	12.63	40.	12.	4.	.29
	ROUTED TO						
+	R3	71.	12.77	40.	12.	4.	.29
	HYDROGRAPH AT						
+	461	165.	12.10	17.	5.	2.	.12
	2 COMBINED AT						
+	C104	220.	12.10	57.	17.	6.	.41
	2 COMBINED AT						
+	C106	866.	12.07	115.	33.	12.	1.05
	ROUTED TO						
+	R106	828.	12.13	115.	33.	12.	1.05
	HYDROGRAPH AT						
+	462	557.	12.07	42.	12.	4.	.30
	2 COMBINED AT						
+	C56	1306.	12.10	156.	44.	16.	1.35
	2 COMBINED AT						
+	C462	1633.	12.30	394.	337.	216.	2.09
	ROUTED TO						
+	R462	1601.	12.33	393.	337.	216.	2.09
	ROUTED TO						
+	RR462	1563.	12.40	392.	337.	215.	2.09

```
          HYDROGRAPH AT
+                          500      1126.   12.27        128.        35.        12.        .93

          2 COMBINED AT
                          C500      2472.   12.33        502.       363.       225.       3.02


*** NORMAL END OF HEC-1 ***
```

Final Storm CAD Analysis

Final Storm CAD Analysis

- *TW to Crown of Conduit*

Scenario: Final Design

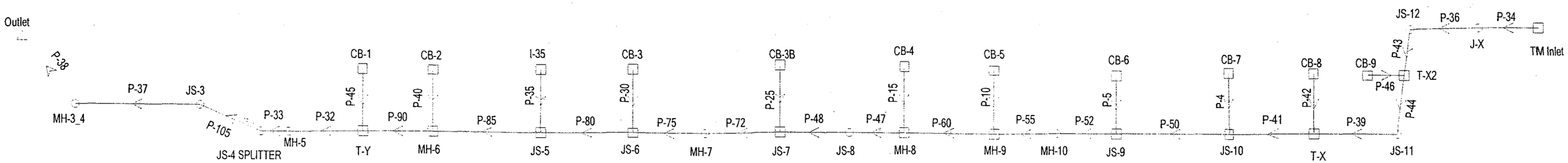

Title: McDowell Road Basin and Storm Drain Design
k:\...\stormcad\mcdowell-rd_final_co10.stm
02/06/07 07:03:10 AM

© Bentley Systems, Inc. Haestad Methods Solution Center Watertown, CT 06795 USA +1-203-755-1666

Project Engineer: KHA User
StormCAD v5.6 [05.06.012.00]

Scenario: Final Design

Combined Pipe\Node Report

Label	US Node	DS Node	Length (ft)	Section Size	Average Velocity (ft/s)	DS Invert Elev (ft)	DS Crown Elev (ft)	US Invert Elev (ft)	US Crown Elev (ft)	Constructed Slope (ft/ft)	HGL Out (ft)	HGL In (ft)	Velocity Out (ft/s)	Velocity In (ft/s)	Total Flow (cfs)	Total System Flow (cfs)	DS Ground Elev (ft)	DS Cover (ft)	US Ground Elev (ft)	US Cover (ft)	Number of Sections
P-105	JS-4 SPLIT	JS-3	89.00	7 x 4 ft	14.43	1,635.36	1,639.36	1,635.40	1,639.40	0.000449	1,644.94	1,645.97	14.43	14.43	404.00	404.00	1,648.60	9.24	1,649.30	9.90	1
P-80	JS-6	JS-5	548.00	78 inch	19.83	1,652.70	1,659.20	1,662.50	1,669.00	0.017883	1,661.65	1,670.28	19.83	19.83	658.00	658.00	1,663.70	4.50	1,676.70	7.70	1
P-85	JS-5	MH-6	514.00	78 inch	20.91	1,642.26	1,648.76	1,650.90	1,657.40	0.016809	1,651.96	1,660.97	20.91	20.91	694.00	694.00	1,657.88	9.12	1,663.70	6.30	1
P-30	CB-3	JS-6	61.00	24 inch	14.64	1,662.50	1,664.50	1,671.30	1,673.30	0.144262	1,670.89	1,673.41	14.64	14.64	46.00	46.00	1,676.70	12.20	1,676.50	3.20	1
P-35	I-35	JS-5	64.00	24 inch	12.73	1,653.20	1,655.20	1,659.80	1,661.80	0.103125	1,661.65	1,663.65	12.73	12.73	40.00	40.00	1,663.70	8.50	1,665.40	3.60	1
P-40	CB-2	MH-6	65.00	18 inch	16.16	1,642.26	1,643.76	1,651.50	1,653.00	0.142154	1,651.96	1,652.45	3.40	5.11	6.00	6.00	1,657.88	14.12	1,657.40	4.40	1
P-90	MH-6	T-Y	290.00	90 inch	15.80	1,637.17	1,644.67	1,642.26	1,649.76	0.017552	1,649.18	1,651.57	15.80	15.80	698.00	698.00	1,652.30	7.63	1,657.88	8.12	1
P-45	CB-1	T-Y	82.00	18 inch	3.96	1,640.10	1,641.60	1,647.30	1,648.80	0.087805	1,649.18	1,649.54	3.96	3.96	7.00	7.00	1,652.30	10.70	1,651.80	3.00	1
P-25	CB-3B	JS-7	67.00	24 inch	11.78	1,684.20	1,686.20	1,685.00	1,687.00	0.011940	1,686.14	1,687.97	11.89	11.78	37.00	37.00	1,690.80	4.60	1,692.00	5.00	1
P-72	JS-7	MH-7	380.00	78 inch	23.61	1,671.15	1,677.65	1,677.80	1,684.30	0.017500	1,676.11	1,683.95	22.65	18.92	615.00	615.00	1,684.60	6.95	1,690.80	6.50	1
P-75	MH-7	JS-6	391.00	78 inch	23.32	1,664.50	1,671.00	1,671.15	1,677.65	0.017008	1,670.89	1,677.30	18.60	18.92	615.00	615.00	1,676.70	5.70	1,684.60	6.95	1
P-32	T-Y	MH-5	103.00	90 inch	15.94	1,635.42	1,642.92	1,637.17	1,644.67	0.016990	1,647.92	1,648.78	15.94	15.94	704.00	704.00	1,650.60	7.68	1,652.30	7.63	1
P-33	MH-5	JS-4 SPLIT	50.00	90 inch	15.94	1,635.40	1,642.90	1,635.42	1,642.92	0.000400	1,647.10	1,647.52	15.94	15.94	704.00	704.00	1,649.30	6.40	1,650.60	7.68	1
P-37	JS-3	MH-3_4	364.00	54 inch	12.70	1,633.70	1,638.20	1,635.36	1,639.86	0.004560	1,640.35	1,644.19	12.70	12.70	404.00	404.00	1,642.90	4.70	1,648.60	8.74	2
P-38	MH-3_4	Outlet	189.00	54 inch	12.70	1,633.10	1,637.60	1,633.70	1,638.20	0.003175	1,637.60	1,639.59	12.70	12.70	404.00	404.00	1,641.50	3.90	1,642.90	4.70	2
P-60	MH-9	MH-8	642.00	72 inch	20.55	1,690.70	1,696.70	1,702.90	1,708.90	0.019003	1,697.31	1,709.40	20.55	20.55	581.00	581.00	1,701.60	4.90	1,713.60	4.70	1
P-10	CB-5	MH-9	68.00	24 inch	17.85	1,705.10	1,707.10	1,709.50	1,711.50	0.064706	1,710.05	1,711.29	8.28	8.78	26.00	26.00	1,713.60	6.50	1,714.50	3.00	1
P-15	CB-4	MH-8	63.00	18 inch	6.79	1,692.90	1,694.40	1,696.00	1,697.50	0.049206	1,697.31	1,698.14	6.79	6.79	12.00	12.00	1,701.60	7.20	1,703.00	5.50	1
P-55	MH-10	MH-9	364.00	72 inch	24.39	1,702.90	1,708.90	1,710.40	1,716.40	0.020604	1,710.05	1,716.39	19.77	19.77	559.00	559.00	1,713.60	4.70	1,721.90	5.50	1
P-5	CB-6	JS-9	57.00	24 inch	20.58	1,720.30	1,722.30	1,724.50	1,726.50	0.073684	1,724.30	1,726.44	12.10	12.20	38.00	38.00	1,731.70	9.40	1,732.00	5.50	1
P-50	JS-10	JS-9	439.00	72 inch	23.45	1,719.90	1,725.90	1,728.20	1,734.20	0.018907	1,724.74	1,733.98	22.87	20.00	559.00	559.00	1,731.70	5.80	1,740.70	6.50	1
P-4	CB-7	JS-10	60.00	24 inch	14.85	1,730.60	1,732.60	1,734.30	1,736.30	0.061667	1,734.60	1,735.65	4.46	6.22	14.00	14.00	1,740.70	8.10	1,740.40	4.10	1
P-52	JS-9	MH-10	362.00	72 inch	24.45	1,710.40	1,716.40	1,717.90	1,723.90	0.020718	1,716.39	1,723.68	19.77	20.00	559.00	559.00	1,721.90	5.50	1,731.70	7.80	1
P-39	JS-11	T-X	291.00	72 inch	23.94	1,734.85	1,740.85	1,740.60	1,746.60	0.019759	1,739.70	1,746.38	22.81	20.00	559.00	559.00	1,746.50	5.65	1,753.10	6.50	1
P-41	T-X	JS-10	249.00	72 inch	23.32	1,730.20	1,736.20	1,734.85	1,740.85	0.018675	1,735.20	1,740.63	22.21	20.00	559.00	559.00	1,740.70	4.50	1,746.50	5.65	1
P-42	CB-8	T-X	63.00	18 inch	14.55	1,737.10	1,738.60	1,741.60	1,743.10	0.071429	1,740.63	1,742.82	5.66	6.50	10.00	10.00	1,746.50	7.90	1,746.50	3.40	1
P-34	TM Inlet	J-X	40.00	54 inch	16.32	1,745.00	1,749.50	1,749.00	1,753.50	0.100000	1,753.41	1,754.00	16.32	16.32	519.00	519.00	1,756.80	7.30	1,755.70	2.20	2
P-36	J-X	JS-12	61.00	54 inch	16.32	1,744.30	1,748.80	1,745.00	1,749.50	0.011475	1,752.34	1,753.41	16.32	16.32	519.00	519.00	1,754.50	5.70	1,756.80	7.30	2
P-43	JS-12	T-X2	43.00	72 inch	18.36	1,743.70	1,749.70	1,744.30	1,750.30	0.013953	1,749.86	1,750.51	18.36	18.36	519.00	519.00	1,753.70	4.00	1,754.50	4.20	1
P-44	T-X2	JS-11	75.00	72 inch	19.77	1,740.60	1,746.60	1,743.70	1,749.70	0.041333	1,748.56	1,749.86	19.77	19.77	559.00	559.00	1,753.10	6.50	1,753.70	4.00	1
P-46	CB-9	T-X2	14.00	18 inch	23.57	1,746.50	1,748.00	1,750.30	1,751.80	0.271429	1,749.86	1,751.52	5.66	6.50	10.00	10.00	1,753.70	5.70	1,752.50	0.70	1
P-47	MH-8	JS-8	197.00	78 inch	22.72	1,687.50	1,694.00	1,690.70	1,697.20	0.016244	1,692.61	1,696.80	21.04	18.22	589.00	589.00	1,699.00	5.00	1,701.60	4.40	1
P-48	JS-8	JS-7	382.00	78 inch	23.48	1,677.80	1,684.30	1,684.50	1,691.00	0.017539	1,684.51	1,690.60	17.75	18.22	589.00	589.00	1,690.80	6.50	1,699.00	8.00	1

Profile
Scenario: Final Design

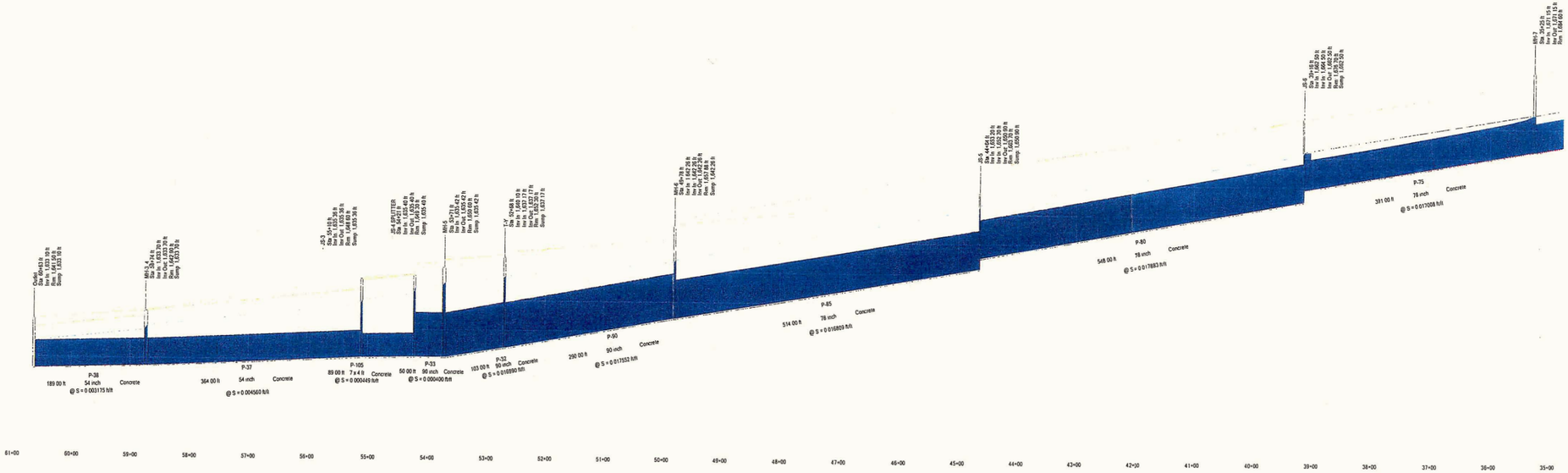

Title: McDowell Road Basin and Storm Drain Design
k:\...\stormcad\mcdowell-rd_final_co10.strm
02/06/07 06:51:19 AM

© Bentley Systems, Inc. Haestad Methods Solution Center Watertown, CT 06795 USA +1-203-755-1666

Project Engineer: KHA User
StormCAD v5.6 [05.06.012.00]

Profile
Scenario: Final Design

Profile: Mainline
Scenario: Final Design

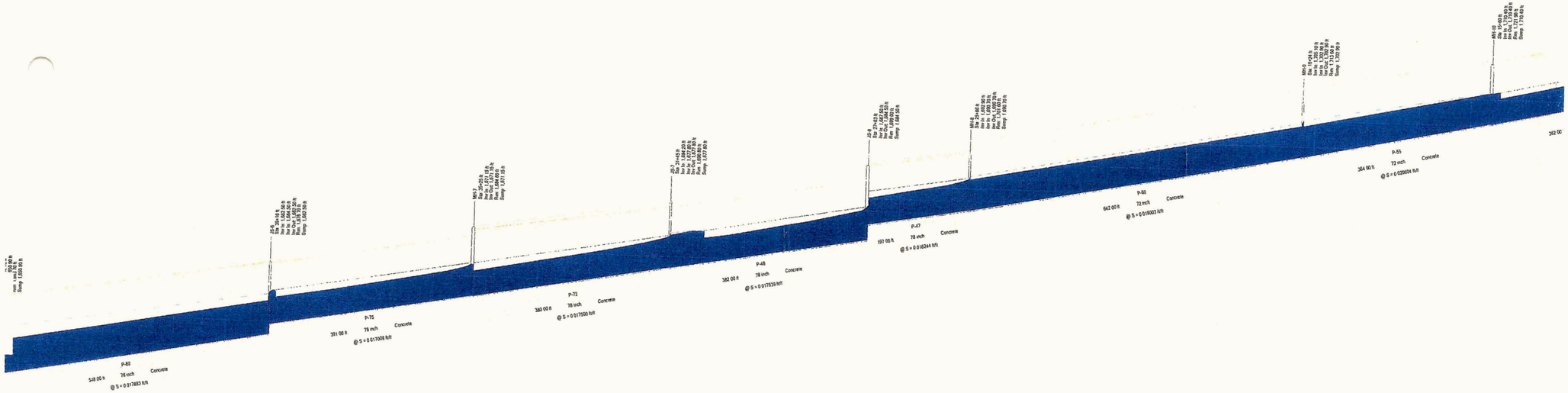

. itle: McDowell Road Basin and Storm Drain Design
k:\...\stormcad\mcdowell-rd_final_co10.stm
02/06/07 06:52:45 AM

© Bentley Systems, Inc. Haestad Methods Solution Center Watertown, CT 06795 USA +1-203-755-1666

Project Engineer: KHA User
StormCAD v5.6 [05.06.012.00]

Profile
Scenario: Final Design

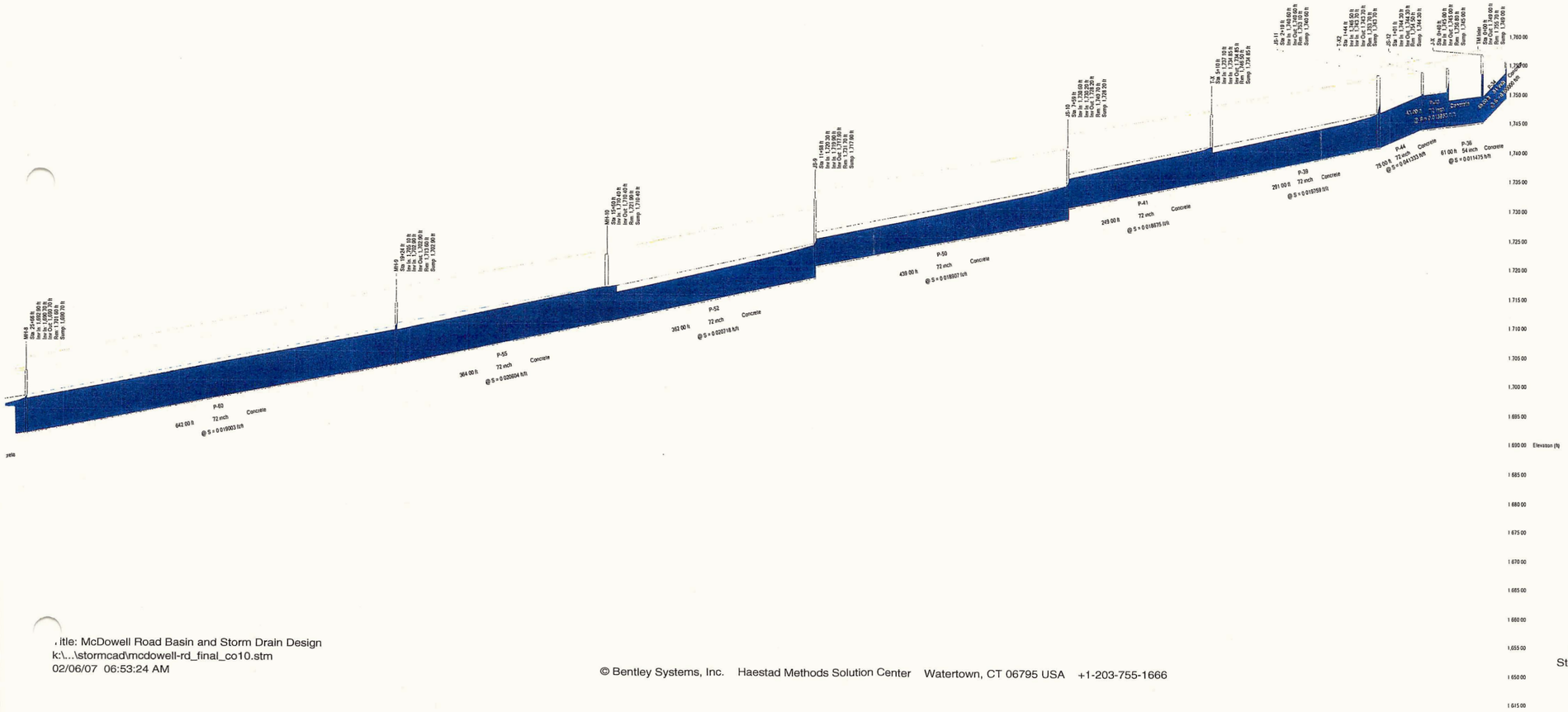

Title: McDowell Road Basin and Storm Drain Design
k:\...\stormcad\mcdowell-rd_final_co10.stm
02/06/07 06:53:24 AM

© Bentley Systems, Inc. Haestad Methods Solution Center Watertown, CT 06795 USA +1-203-755-1666

Project Engineer: KHA User
StormCAD v5.6 [05.06.012.00]

Final Storm CAD Analysis

- *TW free fall*

Scenario: Final Design

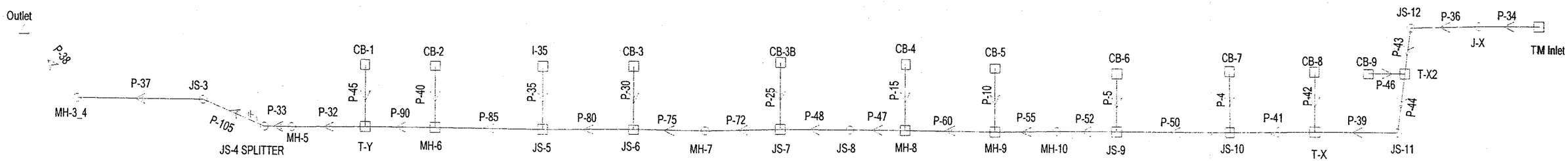

Title: McDowell Road Basin and Storm Drain Design
k:\...\stormcad\mcdowell-rd_final_co10.stm
02/06/07 07:05:34 AM

© Bentley Systems, Inc. Haestad Methods Solution Center Watertown, CT 06795 USA +1-203-755-1666

Project Engineer: **KHA** User
StormCAD v5.6 [05.06.012.00]

Scenario: Final Design

Combined Pipe\Node Report

Label	US Node	DS Node	Length (ft)	Section Size	Average Velocity (ft/s)	DS Invert Elev (ft)	DS Crown Elev (ft)	US Invert Elev (ft)	US Crown Elev (ft)	Constructed Slope (ft/ft)	HGL Out (ft)	HGL In (ft)	Velocity Out (ft/s)	Velocity In (ft/s)	Total Flow (cfs)	Total System Flow (cfs)	DS Ground Elev (ft)	DS Cover (ft)	US Ground Elev (ft)	US Cover (ft)	Number of Sections
P-105	JS-4 SPLIT	JS-3	89.00	7 x 4 ft	14.43	1,635.36	1,639.36	1,635.40	1,639.40	0.000449	1,644.75	1,645.77	14.43	14.43	404.00	404.00	1,648.60	9.24	1,649.30	9.90	1
P-80	JS-6	JS-5	548.00	78 inch	19.83	1,652.70	1,659.20	1,662.50	1,669.00	0.017883	1,661.45	1,670.09	19.83	19.83	658.00	658.00	1,663.70	4.50	1,676.70	7.70	1
P-85	JS-5	MH-6	514.00	78 inch	20.91	1,642.26	1,648.76	1,650.90	1,657.40	0.016809	1,651.77	1,660.77	20.91	20.91	694.00	694.00	1,657.88	9.12	1,663.70	6.30	1
P-30	CB-3	JS-6	61.00	24 inch	27.82	1,662.50	1,664.50	1,671.30	1,673.30	0.144262	1,670.70	1,673.27	14.64	14.68	46.00	46.00	1,676.70	12.20	1,676.50	3.20	1
P-35	I-35	JS-5	64.00	24 inch	12.73	1,653.20	1,655.20	1,659.80	1,661.80	0.103125	1,661.45	1,663.45	12.73	12.73	40.00	40.00	1,663.70	8.50	1,665.40	3.60	1
P-40	CB-2	MH-6	65.00	18 inch	16.16	1,642.26	1,643.76	1,651.50	1,653.00	0.142154	1,651.77	1,652.45	3.40	5.11	6.00	6.00	1,657.88	14.12	1,657.40	4.40	1
P-90	MH-6	T-Y	290.00	90 inch	15.80	1,637.17	1,644.67	1,642.26	1,649.76	0.017552	1,648.98	1,651.38	15.80	15.80	698.00	698.00	1,652.30	7.63	1,657.88	8.12	1
P-45	CB-1	T-Y	82.00	18 inch	3.96	1,640.10	1,641.60	1,647.30	1,648.80	0.087805	1,648.98	1,649.35	3.96	3.96	7.00	7.00	1,652.30	10.70	1,651.80	3.00	1
P-25	CB-3B	JS-7	67.00	24 inch	11.78	1,684.20	1,686.20	1,685.00	1,687.00	0.011940	1,686.14	1,687.97	11.89	11.78	37.00	37.00	1,690.80	4.60	1,692.00	5.00	1
P-72	JS-7	MH-7	380.00	78 inch	23.61	1,671.15	1,677.65	1,677.80	1,684.30	0.017500	1,676.11	1,683.95	22.65	18.92	615.00	615.00	1,684.60	6.95	1,690.80	6.50	1
P-75	MH-7	JS-6	391.00	78 inch	23.32	1,664.50	1,671.00	1,671.15	1,677.65	0.017008	1,670.70	1,677.30	18.85	18.92	615.00	615.00	1,676.70	5.70	1,684.60	6.95	1
P-32	T-Y	MH-5	103.00	90 inch	15.94	1,635.42	1,642.92	1,637.17	1,644.67	0.016990	1,647.72	1,648.59	15.94	15.94	704.00	704.00	1,650.60	7.68	1,652.30	7.63	1
P-33	MH-5	JS-4 SPLIT	50.00	90 inch	15.94	1,635.40	1,642.90	1,635.42	1,642.92	0.000400	1,646.91	1,647.33	15.94	15.94	704.00	704.00	1,649.30	6.40	1,650.60	7.68	1
P-37	JS-3	MH-3_4	364.00	54 inch	12.70	1,633.70	1,638.20	1,635.36	1,639.86	0.004560	1,640.15	1,643.99	12.70	12.70	404.00	404.00	1,642.90	4.70	1,648.60	8.74	2
P-38	MH-3_4	Outlet	189.00	54 inch	12.70	1,633.10	1,637.60	1,633.70	1,638.20	0.003175	1,637.15	1,639.40	13.40	12.70	404.00	404.00	1,641.50	3.90	1,642.90	4.70	2
P-60	MH-9	MH-8	642.00	72 inch	20.55	1,690.70	1,696.70	1,702.90	1,708.90	0.019003	1,697.31	1,709.40	20.55	20.55	581.00	581.00	1,701.60	4.90	1,713.60	4.70	1
P-10	CB-5	MH-9	68.00	24 inch	17.85	1,705.10	1,707.10	1,709.50	1,711.50	0.064706	1,710.05	1,711.29	8.28	8.78	26.00	26.00	1,713.60	6.50	1,714.50	3.00	1
P-15	CB-4	MH-8	63.00	18 inch	6.79	1,692.90	1,694.40	1,696.00	1,697.50	0.049206	1,697.31	1,698.14	6.79	6.79	12.00	12.00	1,701.60	7.20	1,703.00	5.50	1
P-55	MH-10	MH-9	364.00	72 inch	24.39	1,702.90	1,708.90	1,710.40	1,716.40	0.020604	1,710.05	1,716.39	19.77	19.77	559.00	559.00	1,713.60	4.70	1,721.90	5.50	1
P-5	CB-6	JS-9	57.00	24 inch	20.58	1,720.30	1,722.30	1,724.50	1,726.50	0.073684	1,724.30	1,726.44	12.10	12.20	38.00	38.00	1,731.70	9.40	1,732.00	5.50	1
P-50	JS-10	JS-9	439.00	72 inch	23.45	1,719.90	1,725.90	1,728.20	1,734.20	0.018907	1,724.74	1,733.98	22.87	20.00	559.00	559.00	1,731.70	5.80	1,740.70	6.50	1
P-4	CB-7	JS-10	60.00	24 inch	14.85	1,730.60	1,732.60	1,734.30	1,736.30	0.061667	1,734.60	1,735.65	4.46	6.22	14.00	14.00	1,740.70	8.10	1,740.40	4.10	1
P-52	JS-9	MH-10	362.00	72 inch	24.45	1,710.40	1,716.40	1,717.90	1,723.90	0.020718	1,716.39	1,723.68	19.77	20.00	559.00	559.00	1,721.90	5.50	1,731.70	7.80	1
P-39	JS-11	T-X	291.00	72 inch	23.94	1,734.85	1,740.85	1,740.60	1,746.60	0.019759	1,739.70	1,746.38	22.81	20.00	559.00	559.00	1,746.50	5.65	1,753.10	6.50	1
P-41	T-X	JS-10	249.00	72 inch	23.32	1,730.20	1,736.20	1,734.85	1,740.85	0.018675	1,735.20	1,740.63	22.21	20.00	559.00	559.00	1,740.70	4.50	1,746.50	5.65	1
P-42	CB-8	T-X	63.00	18 inch	14.55	1,737.10	1,738.60	1,741.60	1,743.10	0.071429	1,740.63	1,742.82	5.66	6.50	10.00	10.00	1,746.50	7.90	1,746.50	3.40	1
P-34	TM Inlet	J-X	40.00	54 inch	16.32	1,745.00	1,749.50	1,749.00	1,753.50	0.100000	1,753.41	1,754.00	16.32	16.32	519.00	519.00	1,756.80	7.30	1,755.70	2.20	2
P-36	J-X	JS-12	61.00	54 inch	16.32	1,744.30	1,748.80	1,745.00	1,749.50	0.011475	1,752.34	1,753.41	16.32	16.32	519.00	519.00	1,754.50	5.70	1,756.80	7.30	2
P-43	JS-12	T-X2	43.00	72 inch	18.36	1,743.70	1,749.70	1,744.30	1,750.30	0.013953	1,749.86	1,750.51	18.36	18.36	519.00	519.00	1,753.70	4.00	1,754.50	4.20	1
P-44	T-X2	JS-11	75.00	72 inch	19.77	1,740.60	1,746.60	1,743.70	1,749.70	0.041333	1,748.56	1,749.86	19.77	19.77	559.00	559.00	1,753.10	6.50	1,753.70	4.00	1
P-46	CB-9	T-X2	14.00	18 inch	23.57	1,746.50	1,748.00	1,750.30	1,751.80	0.271429	1,749.86	1,751.52	5.66	6.50	10.00	10.00	1,753.70	5.70	1,752.50	0.70	1
P-47	MH-8	JS-8	197.00	78 inch	22.72	1,687.50	1,694.00	1,690.70	1,697.20	0.016244	1,692.61	1,696.80	21.04	18.22	589.00	589.00	1,699.00	5.00	1,701.60	4.40	1
P-48	JS-8	JS-7	382.00	78 inch	23.48	1,677.80	1,684.30	1,684.50	1,691.00	0.017539	1,684.51	1,690.60	17.75	18.22	589.00	589.00	1,690.80	6.50	1,699.00	8.00	1

Profile
Scenario: Final Design

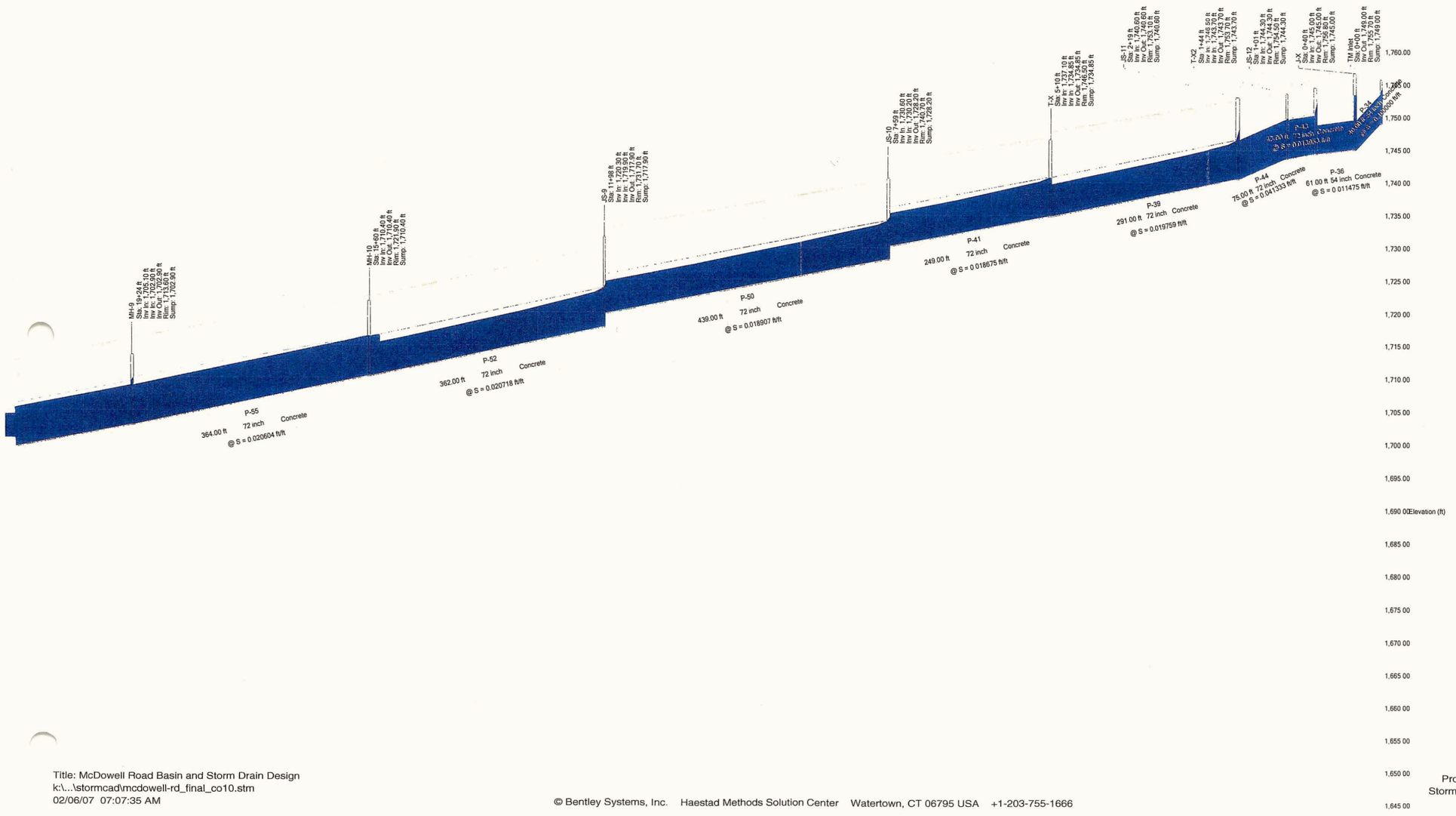

Title: McDowell Road Basin and Storm Drain Design
k:\...\stormcad\mcdowell-rd_final_co10.stm
02/06/07 07:07:35 AM

© Bentley Systems, Inc. Haestad Methods Solution Center Watertown, CT 06795 USA +1-203-755-1666

Project Engineer: KHA User
StormCAD v5.6 [05.06.012.00]

Profile
Scenario: Final Design

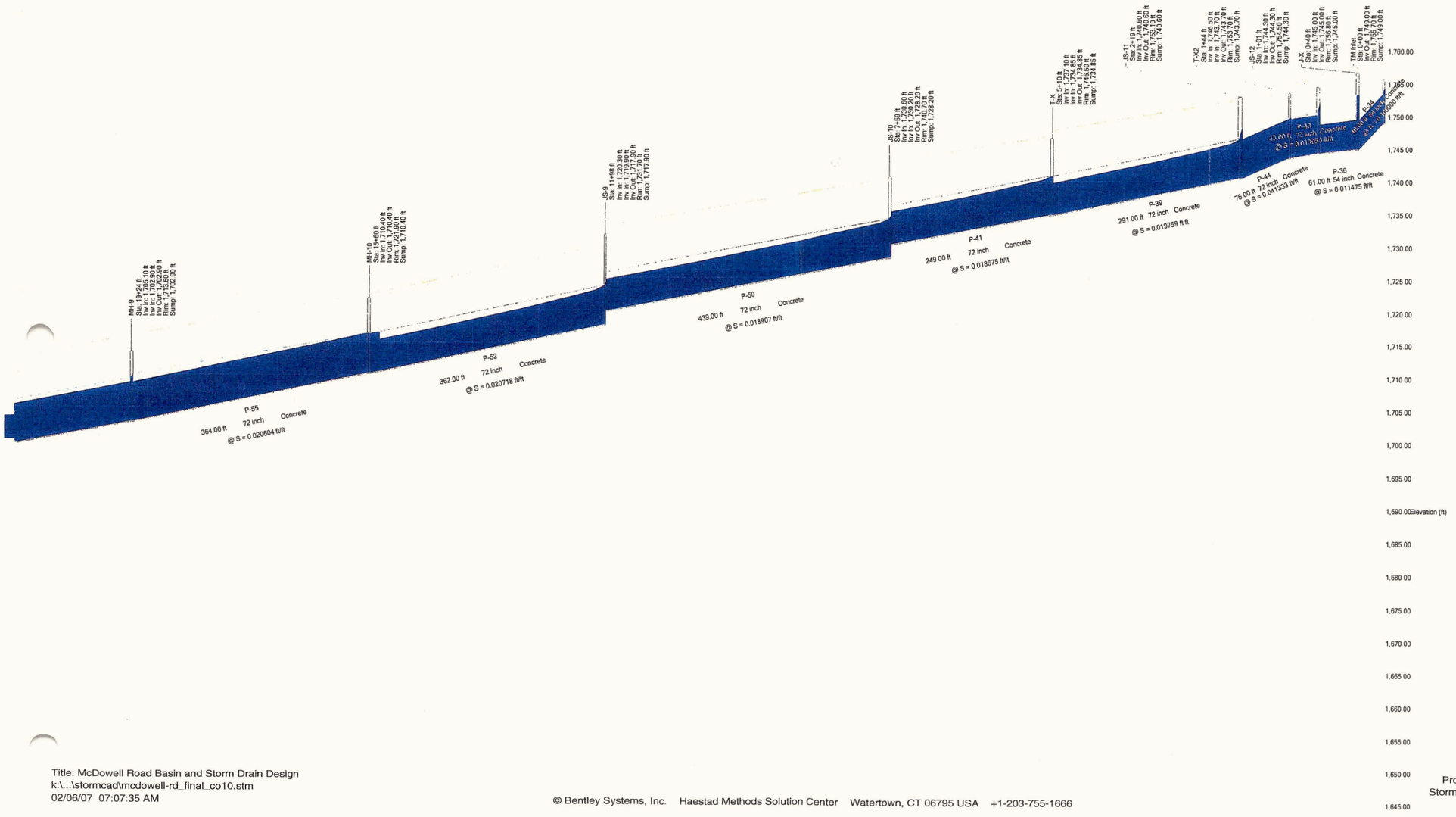

Title: McDowell Road Basin and Storm Drain Design
k:\...\stormcad\mcdowell-rd_final_co10.stm
02/06/07 07:07:35 AM

© Bentley Systems, Inc. Haestad Methods Solution Center Watertown, CT 06795 USA +1-203-755-1666

Project Engineer: KHA User
StormCAD v5.6 [05.06.012.00]

Profile
Scenario: Final Design

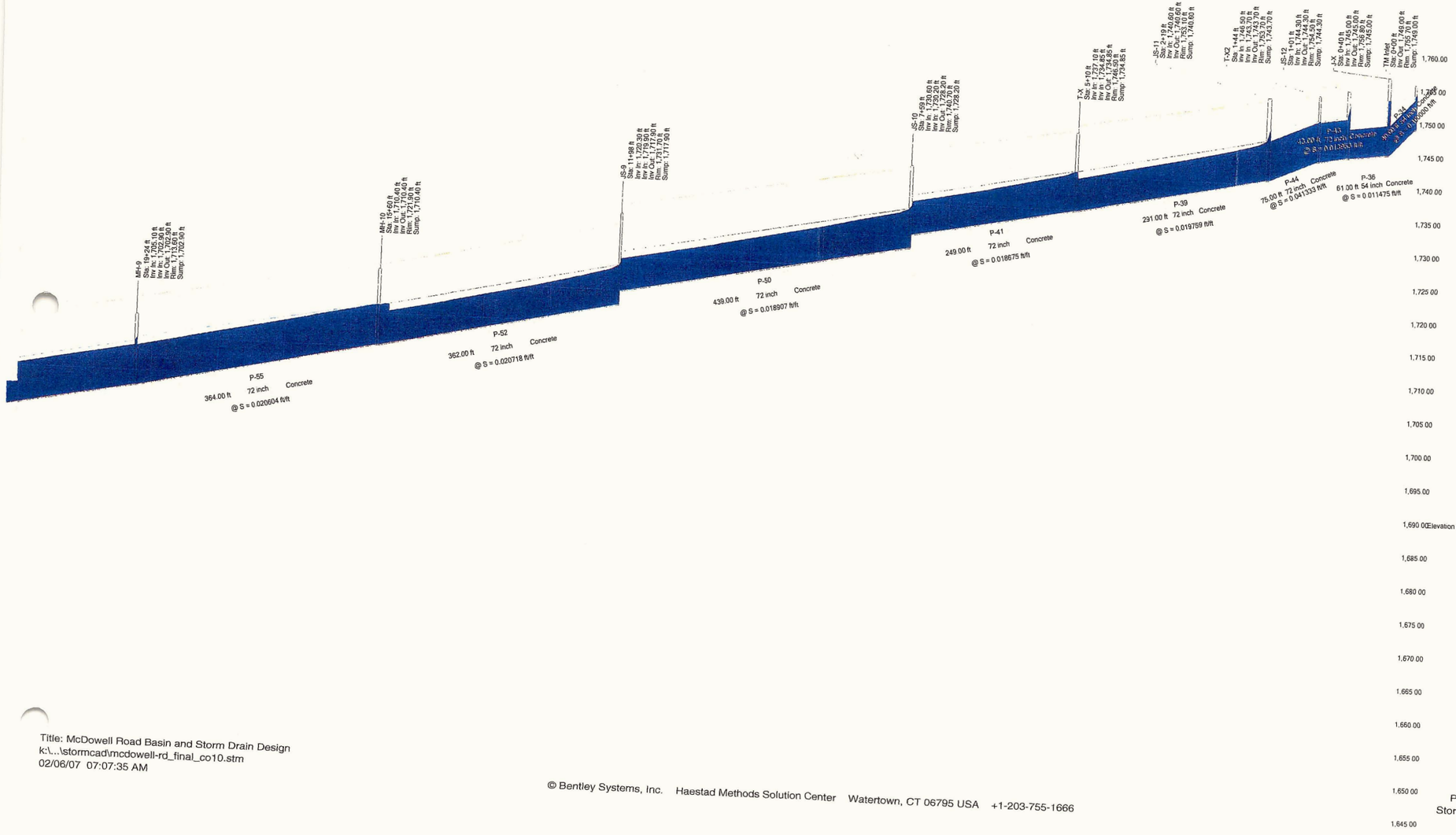

Title: McDowell Road Basin and Storm Drain Design
k:\...\stormcad\mcdowell-rd_final_co10.stm
02/06/07 07:07:35 AM

© Bentley Systems, Inc. Haestad Methods Solution Center Watertown, CT 06795 USA +1-203-755-1666

Project Engineer: KHA User
StormCAD v5.6 [05.06.012.00]

Final Storm CAD Analysis

- ***Basin Culvert***

Structure No. 15

Basin Culvert

Splitter Structure

© Bentley Systems, Inc. Haestad Methods Solution Center Watertown, CT 06795 USA +1-203-755-1666

Scenario: Base

Combined Pipe\Node Report

Label	US Node	DS Node	Length (ft)	Section Size	Average Velocity (ft/s)	DS Invert Elev (ft)	DS Crown Elev (ft)	US Invert Elev (ft)	US Crown Elev (ft)	Constructed Slope (ft/ft)	HGL Out (ft)	HGL In (ft)	Velocity Out (ft/s)	Velocity In (ft/s)	Total Flow (cfs)	Total System Flow (cfs)	DS Ground Elev (ft)	DS Cover (ft)	US Ground Elev (ft)	US Cover (ft)	Number of Sections
Basin Culve	Splitter Stru	Structure N	185.00	42 inch	10.46	1,630.50	1,634.00	1,635.40	1,638.90	0.026486	1,639.70	1,641.85	10.46	10.46	302.00	302.00	1,637.00	3.00	1,649.30	10.40	3

© Bentley Systems, Inc. Haestad Methods Solution Center Watertown, CT 06795 USA +1-203-755-1666

Profile: Profile - 1

Scenario: Base

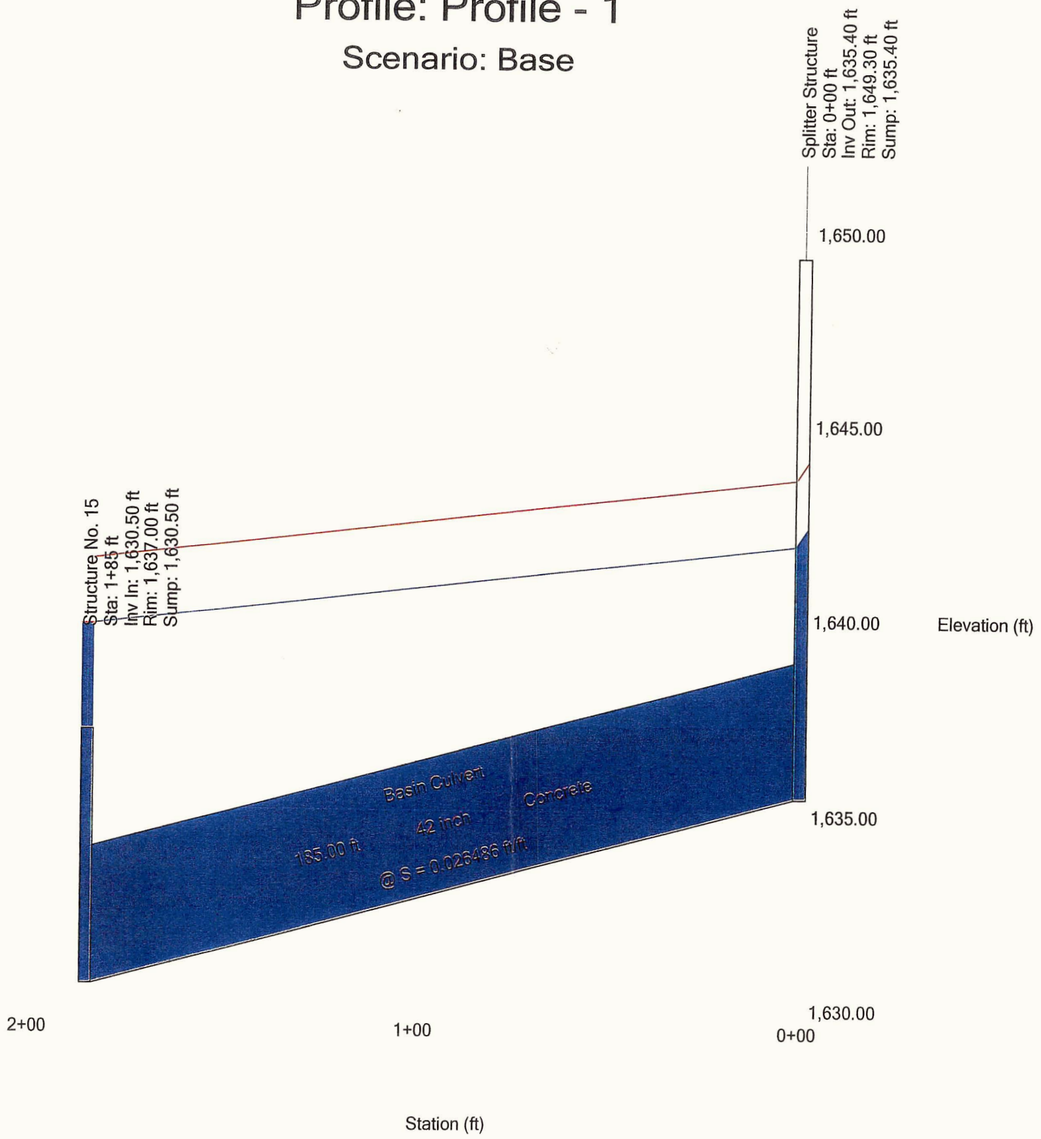

© Bentley Systems, Inc. Haestad Methods Solution Center Watertown, CT 06795 USA +1-203-755-1666

Basin Outlet Pipe

1

CURRENT DATE: 04-12-2006
CURRENT TIME: 13:08:28

FILE DATE: 04-12-2006
FILE NAME: MCDORI

FHWA CULVERT ANALYSIS
HY-8, VERSION 6.1

CULV NO.	SITE DATA: INLET ELEV. (ft)	OUTLET ELEV. (ft)	CULVERT LENGTH (ft)	CULVERT SHAPE, MATERIAL, INLET: BARRELS SHAPE MATERIAL	SPAN (ft)	RISE (ft)	MANNING n	INLET TYPE
1	1630.00	1626.00	10.77	1 RCP	3.42	3.42	.012	CONVENTIONAL
2								
3								
4								
5								
6								

41" Pipe (orifice plate) to ensure inlet control

SUMMARY OF CULVERT FLOWS (cfs) FILE: MCDORI DATE: 04-12-2006

ELEV (ft)	TOTAL	1	2	3	4	5	6	ROADWAY	ITR
1630.00	0.0	0.0	0.0	0.0	0.0	0.0	0.0	0.00	1
1630.73	12.0	12.0	0.0	0.0	0.0	0.0	0.0	0.00	1
1631.51	24.0	24.0	0.0	0.0	0.0	0.0	0.0	0.00	1
1632.13	36.0	36.0	0.0	0.0	0.0	0.0	0.0	0.00	1
1632.70	48.0	48.0	0.0	0.0	0.0	0.0	0.0	0.00	1
1633.33	60.0	60.0	0.0	0.0	0.0	0.0	0.0	0.00	1
1634.05	72.0	72.0	0.0	0.0	0.0	0.0	0.0	0.00	1
1634.92	84.0	84.0	0.0	0.0	0.0	0.0	0.0	0.00	1
1635.93	96.0	96.0	0.0	0.0	0.0	0.0	0.0	0.00	1
1637.09	108.0	108.0	0.0	0.0	0.0	0.0	0.0	0.00	1
1638.40	120.0	120.0	0.0	0.0	0.0	0.0	0.0	0.00	1
1800.00	346.5	346.5	0.0	0.0	0.0	0.0	0.0	OVERTOPPING	

SUMMARY OF ITERATIVE SOLUTION ERRORS FILE: MCDORI DATE: 04-12-2006

HEAD ELEV (ft)	HEAD ERROR (ft)	TOTAL FLOW (cfs)	FLOW ERROR (cfs)	% FLOW ERROR
1630.00	0.000	0.00	0.00	0.00
1630.73	0.000	12.00	0.00	0.00
1631.51	0.000	24.00	0.00	0.00
1632.13	0.000	36.00	0.00	0.00
1632.70	0.000	48.00	0.00	0.00
1633.33	0.000	60.00	0.00	0.00
1634.05	0.000	72.00	0.00	0.00
1634.92	0.000	84.00	0.00	0.00
1635.93	0.000	96.00	0.00	0.00
1637.09	0.000	108.00	0.00	0.00
1638.40	0.000	120.00	0.00	0.00

<1> TOLERANCE (ft) = 0.010 <2> TOLERANCE (%) = 1.000

CURRENT DATE: 04-12-2006 FILE DATE: 04-12-2006
CURRENT TIME: 13:08:28 FILE NAME: MCDORI

PERFORMANCE CURVE FOR CULVERT 1 - 1(3.42 (ft) BY 3.42 (ft)) RCP

DIS-CHARGE FLOW (cfs)	HEAD-WATER ELEV. (ft)	INLET CONTROL DEPTH (ft)	OUTLET CONTROL DEPTH (ft)	FLOW TYPE <F4>	NORMAL DEPTH (ft)	CRIT. DEPTH (ft)	OUTLET DEPTH (ft)	TW DEPTH (ft)	OUTLET VEL. (fps)	TW VEL. (fps)
0.00	1630.00	0.00	0.00	0-NF	0.00	0.00	0.00	1.10	0.00	0.00
12.00	1630.73	0.73	0.73	1-S2n	0.30	1.05	0.42	1.25	17.72	2.66
24.00	1631.51	1.51	1.51	1-S2n	0.42	1.51	0.69	1.32	18.22	3.48
36.00	1632.13	2.13	2.13	1-S2n	0.52	1.87	0.87	1.38	19.46	4.07
48.00	1632.70	2.70	2.70	1-S2n	0.61	2.17	1.07	1.44	19.58	4.54
60.00	1633.33	3.33	3.33	1-S2n	0.70	2.44	1.24	1.48	19.96	4.94
72.00	1634.05	4.05	4.05	5-S2n	0.76	2.66	1.36	1.53	21.08	5.29
84.00	1634.92	4.92	4.92	5-S2n	0.82	2.84	1.53	1.57	21.05	5.60
96.00	1635.93	5.93	5.93	5-S2n	0.87	3.00	1.67	1.61	21.52	5.89
108.00	1637.10	7.10	7.10	5-S2n	0.93	3.16	1.80	1.65	22.06	6.15
120.00	1638.40	8.40	8.40	5-S2n	0.99	3.32	1.91	1.68	22.80	6.40

El. inlet face invert 1630.00 ft El. outlet invert 1626.00 ft
El. inlet throat invert 0.00 ft El. inlet crest 0.00 ft

***** SITE DATA ***** CULVERT INVERT **********

INLET STATION	0.00 ft
INLET ELEVATION	1630.00 ft
OUTLET STATION	10.00 ft
OUTLET ELEVATION	1626.00 ft
NUMBER OF BARRELS	1
SLOPE (V/H)	0.4000
CULVERT LENGTH ALONG SLOPE	10.77 ft

***** CULVERT DATA SUMMARY **********

BARREL SHAPE	CIRCULAR
BARREL DIAMETER	3.42 ft
BARREL MATERIAL	CONCRETE
BARREL MANNING'S n	0.012
INLET TYPE	CONVENTIONAL
INLET EDGE AND WALL	SQUARE EDGE WITH HEADWALL
INLET DEPRESSION	NONE

CURRENT DATE: 04-12-2006 FILE DATE: 04-12-2006
CURRENT TIME: 13:08:28 FILE NAME: MCDORI

TAILWATER

******* REGULAR CHANNEL CROSS SECTION ****************

BOTTOM WIDTH	30.00 ft
SIDE SLOPE H/V (X:1)	4.0
CHANNEL SLOPE V/H (ft/ft)	0.038
MANNING'S n (.01-0.1)	0.030
CHANNEL INVERT ELEVATION	1627.10 ft
CULVERT NO.1 OUTLET INVERT ELEVATION	1626.00 ft

******* UNIFORM FLOW RATING CURVE FOR DOWNSTREAM CHANNEL

FLOW (cfs)	W.S.E. (ft)	FROUDE NUMBER	DEPTH (ft)	VEL. (f/s)	SHEAR (psf)
0.00	1627.10	0.000	0.00	0.00	0.00
12.00	1627.25	1.220	0.15	2.66	0.35
24.00	1627.32	1.298	0.22	3.48	0.53
36.00	1627.38	1.345	0.28	4.07	0.67
48.00	1627.44	1.377	0.34	4.54	0.80
60.00	1627.48	1.403	0.39	4.94	0.91
72.00	1627.53	1.423	0.43	5.29	1.02
84.00	1627.57	1.440	0.47	5.60	1.12
96.00	1627.61	1.455	0.51	5.89	1.21
108.00	1627.65	1.468	0.55	6.15	1.29
120.00	1627.68	1.479	0.58	6.40	1.38

ROADWAY OVERTOPPING DATA

ROADWAY SURFACE	PAVED
EMBANKMENT TOP WIDTH	30.00 ft
CREST LENGTH	150.00 ft
OVERTOPPING CREST ELEVATION	1800.00 ft

1

CURRENT DATE: 04-06-2006
CURRENT TIME: 12:33:08

FILE DATE: 04-06-2006
FILE NAME: MCDOUT

FHWA CULVERT ANALYSIS
HY-8, VERSION 6.1

CULV NO.	SITE DATA: INLET ELEV. (ft)	OUTLET ELEV. (ft)	CULVERT LENGTH (ft)	CULVERT SHAPE, MATERIAL, INLET: BARRELS SHAPE MATERIAL	SPAN (ft)	RISE (ft)	MANNING n	INLET TYPE
1	1630.00	1626.00	792.01	1 RCP	4.00	4.00	.012	CONVENTIONAL
2								
3								
4								
5								
6								

SUMMARY OF CULVERT FLOWS (cfs) FILE: MCDOUT DATE: 04-06-2006

ELEV (ft)	TOTAL	1	2	3	4	5	6	ROADWAY	ITR
1630.00	0.0	0.0	0.0	0.0	0.0	0.0	0.0	0.00	1
1631.40	13.9	13.9	0.0	0.0	0.0	0.0	0.0	0.00	1
1632.19	27.8	27.8	0.0	0.0	0.0	0.0	0.0	0.00	1
1632.82	41.7	41.7	0.0	0.0	0.0	0.0	0.0	0.00	1
1633.37	55.6	55.6	0.0	0.0	0.0	0.0	0.0	0.00	1
1633.89	69.5	69.5	0.0	0.0	0.0	0.0	0.0	0.00	1
1634.45	83.4	83.4	0.0	0.0	0.0	0.0	0.0	0.00	1
1635.06	97.3	97.3	0.0	0.0	0.0	0.0	0.0	0.00	1
1635.77	111.2	111.2	0.0	0.0	0.0	0.0	0.0	0.00	1
1636.58	125.1	125.1	0.0	0.0	0.0	0.0	0.0	0.00	1
1638.56	139.0	139.0	0.0	0.0	0.0	0.0	0.0	0.00	1
1800.00	499.5	499.5	0.0	0.0	0.0	0.0	0.0	OVERTOPPING	

SUMMARY OF ITERATIVE SOLUTION ERRORS FILE: MCDOUT DATE: 04-06-2006

HEAD ELEV (ft)	HEAD ERROR (ft)	TOTAL FLOW (cfs)	FLOW ERROR (cfs)	% FLOW ERROR
1630.00	0.000	0.00	0.00	0.00
1631.40	0.000	13.90	0.00	0.00
1632.19	0.000	27.80	0.00	0.00
1632.82	0.000	41.70	0.00	0.00
1633.37	0.000	55.60	0.00	0.00
1633.89	0.000	69.50	0.00	0.00
1634.45	0.000	83.40	0.00	0.00
1635.06	0.000	97.30	0.00	0.00
1635.77	0.000	111.20	0.00	0.00
1636.58	0.000	125.10	0.00	0.00
1638.56	0.000	139.00	0.00	0.00

<1> TOLERANCE (ft) = 0.010 <2> TOLERANCE (%) = 1.000

CURRENT DATE: 04-06-2006 FILE DATE: 04-06-2006
CURRENT TIME: 12:33:08 FILE NAME: MCDOUT

PERFORMANCE CURVE FOR CULVERT 1 - 1(4.00 (ft) BY 4.00 (ft)) RCP

DIS-CHARGE FLOW (cfs)	HEAD-WATER ELEV. (ft)	INLET CONTROL DEPTH (ft)	OUTLET CONTROL DEPTH (ft)	FLOW TYPE <F4>	NORMAL DEPTH (ft)	CRIT. DEPTH (ft)	OUTLET DEPTH (ft)	TW DEPTH (ft)	OUTLET VEL. (fps)	TW VEL. (fps)
0.00	1630.00	0.00	0.00	0-NF	0.00	0.00	0.00	1.10	0.00	0.00
13.90	1631.40	1.40	1.40	1-S2n	0.94	1.08	0.88	1.26	6.77	2.82
27.80	1632.19	2.19	2.19	1-S2n	1.35	1.56	1.26	1.34	8.21	3.68
41.70	1632.82	2.82	2.82	1-S2n	1.69	1.92	1.62	1.41	8.72	4.30
55.60	1633.37	3.37	3.37	1-S2n	2.00	2.23	1.93	1.47	9.23	4.80
69.50	1633.89	3.89	3.89	1-S2n	2.29	2.51	2.21	1.52	9.75	5.22
83.40	1634.45	4.45	4.45	5-S2n	2.59	2.76	2.46	1.57	10.27	5.59
97.30	1635.06	5.06	5.06	5-S2n	2.90	2.98	2.78	1.61	10.45	5.92
111.20	1635.77	5.77	5.66	2-M2c	3.30	3.18	3.18	1.66	10.37	6.22
125.10	1636.58	6.58	5.71	2-M2c	4.00	3.33	3.33	1.69	11.21	6.49
139.00	1638.56	7.49	8.56	2-M2c	4.00	3.48	3.48	1.73	12.01	6.75

El. inlet face invert 1630.00 ft El. outlet invert 1626.00 ft
El. inlet throat invert 0.00 ft El. inlet crest 0.00 ft

***** SITE DATA ***** CULVERT INVERT **********

INLET STATION	0.00 ft
INLET ELEVATION	1630.00 ft
OUTLET STATION	792.00 ft
OUTLET ELEVATION	1626.00 ft
NUMBER OF BARRELS	1
SLOPE (V/H)	0.0051
CULVERT LENGTH ALONG SLOPE	792.01 ft

***** CULVERT DATA SUMMARY **********

BARREL SHAPE	CIRCULAR
BARREL DIAMETER	4.00 ft
BARREL MATERIAL	CONCRETE
BARREL MANNING'S n	0.012
INLET TYPE	CONVENTIONAL
INLET EDGE AND WALL	SQUARE EDGE WITH HEADWALL
INLET DEPRESSION	NONE

CURRENT DATE: 04-06-2006
CURRENT TIME: 12:33:08

FILE DATE: 04-06-2006
FILE NAME: MCDOUT

TAILWATER

******* REGULAR CHANNEL CROSS SECTION ****************

BOTTOM WIDTH	30.00 ft
SIDE SLOPE H/V (X:1)	4.0
CHANNEL SLOPE V/H (ft/ft)	0.038
MANNING'S n (.01-0.1)	0.030
CHANNEL INVERT ELEVATION	1627.10 ft
CULVERT NO.1 OUTLET INVERT ELEVATION	1626.00 ft

******* UNIFORM FLOW RATING CURVE FOR DOWNSTREAM CHANNEL

FLOW (cfs)	W.S.E. (ft)	FROUDE NUMBER	DEPTH (ft)	VEL. (f/s)	SHEAR (psf)
0.00	1627.10	0.000	0.00	0.00	0.00
13.90	1627.26	1.236	0.16	2.82	0.38
27.80	1627.34	1.315	0.24	3.68	0.58
41.70	1627.41	1.361	0.31	4.30	0.74
55.60	1627.47	1.394	0.37	4.80	0.87
69.50	1627.52	1.419	0.42	5.22	1.00
83.40	1627.57	1.440	0.47	5.59	1.11
97.30	1627.61	1.457	0.51	5.92	1.22
111.20	1627.66	1.471	0.56	6.22	1.32
125.10	1627.69	1.484	0.59	6.49	1.41
139.00	1627.73	1.495	0.63	6.75	1.50

ROADWAY OVERTOPPING DATA

ROADWAY SURFACE	PAVED
EMBANKMENT TOP WIDTH	30.00 ft
CREST LENGTH	150.00 ft
OVERTOPPING CREST ELEVATION	1800.00 ft

1

CURRENT DATE: 04-06-2006
CURRENT TIME: 12:33:08

FILE DATE: 04-06-2006
FILE NAME: MCDOUT

FHWA CULVERT ANALYSIS
HY-8, VERSION 6.1

CULV NO.	SITE DATA: INLET ELEV. (ft)	SITE DATA: OUTLET ELEV. (ft)	SITE DATA: CULVERT LENGTH (ft)	CULVERT SHAPE, MATERIAL, INLET: BARRELS SHAPE MATERIAL	SPAN (ft)	RISE (ft)	MANNING n	INLET TYPE
1	1630.00	1626.00	792.01	1 RCP	4.00	4.00	.012	CONVENTIONAL
2								
3								
4								
5								
6								

SUMMARY OF CULVERT FLOWS (cfs) FILE: MCDOUT DATE: 04-06-2006

ELEV (ft)	TOTAL	1	2	3	4	5	6	ROADWAY	ITR
1630.00	0.0	0.0	0.0	0.0	0.0	0.0	0.0	0.00	1
1631.40	13.9	13.9	0.0	0.0	0.0	0.0	0.0	0.00	1
1632.19	27.8	27.8	0.0	0.0	0.0	0.0	0.0	0.00	1
1632.82	41.7	41.7	0.0	0.0	0.0	0.0	0.0	0.00	1
1633.37	55.6	55.6	0.0	0.0	0.0	0.0	0.0	0.00	1
1633.89	69.5	69.5	0.0	0.0	0.0	0.0	0.0	0.00	1
1634.45	83.4	83.4	0.0	0.0	0.0	0.0	0.0	0.00	1
1635.06	97.3	97.3	0.0	0.0	0.0	0.0	0.0	0.00	1
1635.77	111.2	111.2	0.0	0.0	0.0	0.0	0.0	0.00	1
1636.58	125.1	125.1	0.0	0.0	0.0	0.0	0.0	0.00	1
1638.56	139.0	139.0	0.0	0.0	0.0	0.0	0.0	0.00	1
1800.00	499.5	499.5	0.0	0.0	0.0	0.0	0.0	OVERTOPPING	

SUMMARY OF ITERATIVE SOLUTION ERRORS FILE: MCDOUT DATE: 04-06-2006

HEAD ELEV (ft)	HEAD ERROR (ft)	TOTAL FLOW (cfs)	FLOW ERROR (cfs)	% FLOW ERROR
1630.00	0.000	0.00	0.00	0.00
1631.40	0.000	13.90	0.00	0.00
1632.19	0.000	27.80	0.00	0.00
1632.82	0.000	41.70	0.00	0.00
1633.37	0.000	55.60	0.00	0.00
1633.89	0.000	69.50	0.00	0.00
1634.45	0.000	83.40	0.00	0.00
1635.06	0.000	97.30	0.00	0.00
1635.77	0.000	111.20	0.00	0.00
1636.58	0.000	125.10	0.00	0.00
1638.56	0.000	139.00	0.00	0.00

<1> TOLERANCE (ft) = 0.010 <2> TOLERANCE (%) = 1.000

CURRENT DATE: 04-06-2006 FILE DATE: 04-06-2006
CURRENT TIME: 12:33:08 FILE NAME: MCDOUT

PERFORMANCE CURVE FOR CULVERT 1 - 1(4.00 (ft) BY 4.00 (ft)) RCP

DIS-CHARGE FLOW (cfs)	HEAD-WATER ELEV. (ft)	INLET CONTROL DEPTH (ft)	OUTLET CONTROL DEPTH (ft)	FLOW TYPE <F4>	NORMAL DEPTH (ft)	CRIT. DEPTH (ft)	OUTLET DEPTH (ft)	TW DEPTH (ft)	OUTLET VEL. (fps)	TW VEL. (fps)
0.00	1630.00	0.00	0.00	0-NF	0.00	0.00	0.00	1.10	0.00	0.00
13.90	1631.40	1.40	1.40	1-S2n	0.94	1.08	0.88	1.26	6.77	2.82
27.80	1632.19	2.19	2.19	1-S2n	1.35	1.56	1.26	1.34	8.21	3.68
41.70	1632.82	2.82	2.82	1-S2n	1.69	1.92	1.62	1.41	8.72	4.30
55.60	1633.37	3.37	3.37	1-S2n	2.00	2.23	1.93	1.47	9.23	4.80
69.50	1633.89	3.89	3.89	1-S2n	2.29	2.51	2.21	1.52	9.75	5.22
83.40	1634.45	4.45	4.45	5-S2n	2.59	2.76	2.46	1.57	10.27	5.59
97.30	1635.06	5.06	5.06	5-S2n	2.90	2.98	2.78	1.61	10.45	5.92
111.20	1635.77	5.77	5.66	2-M2c	3.30	3.18	3.18	1.66	10.37	6.22
125.10	1636.58	6.58	5.71	2-M2c	4.00	3.33	3.33	1.69	11.21	6.49
139.00	1638.56	7.49	8.56	2-M2c	4.00	3.48	3.48	1.73	12.01	6.75

El. inlet face invert 1630.00 ft El. outlet invert 1626.00 ft
El. inlet throat invert 0.00 ft El. inlet crest 0.00 ft

***** SITE DATA ***** CULVERT INVERT **********

INLET STATION	0.00 ft
INLET ELEVATION	1630.00 ft
OUTLET STATION	792.00 ft
OUTLET ELEVATION	1626.00 ft
NUMBER OF BARRELS	1
SLOPE (V/H)	0.0051
CULVERT LENGTH ALONG SLOPE	792.01 ft

***** CULVERT DATA SUMMARY **********

BARREL SHAPE	CIRCULAR
BARREL DIAMETER	4.00 ft
BARREL MATERIAL	CONCRETE
BARREL MANNING'S n	0.012
INLET TYPE	CONVENTIONAL
INLET EDGE AND WALL	SQUARE EDGE WITH HEADWALL
INLET DEPRESSION	NONE

CURRENT DATE: 04-06-2006
CURRENT TIME: 12:33:08

FILE DATE: 04-06-2006
FILE NAME: MCDOUT

TAILWATER

******* REGULAR CHANNEL CROSS SECTION ****************

BOTTOM WIDTH	30.00 ft
SIDE SLOPE H/V (X:1)	4.0
CHANNEL SLOPE V/H (ft/ft)	0.038
MANNING'S n (.01-0.1)	0.030
CHANNEL INVERT ELEVATION	1627.10 ft
CULVERT NO.1 OUTLET INVERT ELEVATION	1626.00 ft

******* UNIFORM FLOW RATING CURVE FOR DOWNSTREAM CHANNEL

FLOW (cfs)	W.S.E. (ft)	FROUDE NUMBER	DEPTH (ft)	VEL. (f/s)	SHEAR (psf)
0.00	1627.10	0.000	0.00	0.00	0.00
13.90	1627.26	1.236	0.16	2.82	0.38
27.80	1627.34	1.315	0.24	3.68	0.58
41.70	1627.41	1.361	0.31	4.30	0.74
55.60	1627.47	1.394	0.37	4.80	0.87
69.50	1627.52	1.419	0.42	5.22	1.00
83.40	1627.57	1.440	0.47	5.59	1.11
97.30	1627.61	1.457	0.51	5.92	1.22
111.20	1627.66	1.471	0.56	6.22	1.32
125.10	1627.69	1.484	0.59	6.49	1.41
139.00	1627.73	1.495	0.63	6.75	1.50

ROADWAY OVERTOPPING DATA

ROADWAY SURFACE	PAVED
EMBANKMENT TOP WIDTH	30.00 ft
CREST LENGTH	150.00 ft
OVERTOPPING CREST ELEVATION	1800.00 ft

$$L_{sp} = D_o\,(8 + 17 \log(1.495))$$

$$L_{sp} = 43.876$$

$$\text{Pipe } Fr = 1.28 = \frac{12.01^2}{32.2\,(3.48)}$$

$$d_s = 0.25(4)(1.28) = 1.28' = 15.36'' \Rightarrow \text{use } 16''$$

$$D_{max} = 32''$$

$$D_{min} = 5.3''$$

Inlet

- ***Storm Drain Inlets***

INLET ID	STATION	Q total [cfs]	DOWNSTREAM CAPACITY	DOWNSTREAM CAPACITY	TYPE*	COMMENT	# of pipes	Pipe Head [ft]	Pipe Capacity [cfs]	Inlet Configuration	Inlet Head [ft]	Inlet Capacity [cfs]	Total Capacity [cfs]
CB - 1	12+00	7			A	No Cross Culvert				Single	0.50	7	7
CB - 2	15+00	6	4.85	10	B		1	1.53	7	Single	1.03	10	17
I - 1	20+00	40	79	12	A					Existing		40	40
CB - 3	23+00	5			A	No Cross Culvert				Single	1.15	10	10
CB - 4	25+85	46	18.4	12	B		2	1.90	18.47	Quadruple	1.40	46	64.47
I - 2	33+30	37	15.07	12	B		1	0.50	12	Existing		24.5	36.5
CB - 5	38+90	12	143.7	72	B		1	2.40	10.5	Single	1.90	13	23.5
CB - 6	45+35	26	39.54	20	B		1	2.22	10.5	Triple	1.72	38	48.5
CB - 7	53+00	38	97.34	49	B		2	3.30	28	Triple	2.80	48	76
CB - 8	57+00	14			A	No Cross Culvert				Double	0.77	17	17
CB - 9	59+00	10			A	No Cross Culvert				Single	1.10	10	10
CB - 10	62+50	10			A	No Cross Culvert				Single	1.40	11	11

*Note:
Type A: Offsite flows enter catch basin only
Type B: Offsite flows enter cross culvert and catch basin

PRELIMINARY

TESTHOLE SUMMARY REPORT

AMERICAN WATER SERVICES UI, Inc.
2527 South 16th Avenue
Phoenix, Arizona 85007
(602) 254-7344
Prepared by: ART RADA

Date: 4/7/2006
PROJECT NAME: McDowell Rd. Basin & Storm Drain Design
PROJECT NUMBER: 2004C052
CONTRACT NUMBER:
AWS JOB # **N33-3053-06**

Data in Feet

UTILITY LOCATION REQUESTS					ACTUAL FIELD RECORDS						
TH#	Street	Northing/ Station (actual)	Easting/ Offset -Lt/+Rt (actual)	Anticipated Utility	Date	Ground Elevation	Top Elevation	Bottom Elevation	Material Type Outside Diameter	Depth of Cover	Depth of Bottom
1	McDowell Rd.	897332.61	775183.31	CATV	03/24/06	1633.80	1630.30		3- 4"PVC ELECTRIC	3.50	
2	McDowell Rd.	897310.81	775192.26	1-16" WATER	03/24/06	1634.06	1628.31		1 - 16" METALLIC WATER	5.75	
3	McDowell Rd.	897309.28	775194.26	1-4" GAS	03/24/06	1634.04	1629.25		1 - 4" PE GAS	4.80	
4	McDowell Rd.	897334.03	775183.42	ELECTRIC	03/24/06	1633.78	1630.15		2 - 2" PE F/O CATV CONDUIT	3.62	
5	McDowell Rd.	897275.05	775540.78	2" GAS	03/24/06	1641.00	1637.27		1 - 2 1/2" PE GAS	3.73	
6***	McDowell Rd.	897210.13	776081.51	SEWER	03/24/06	1648.35	1647.97	1641.74	36" CONC/SLURRY FILLED TRENCH	0.39	6.61
7	McDowell Rd.	897250.35	776081.55	SEWER	03/24/06	1649.39	1641.20		12" PVC SEWER LINE	8.20	
8***	McDowell Rd.	897231.86	776105.56	SEWER	03/24/06	1649.17	1648.76	1642.15	36" CONC/SLURRY FILLED TRENCH	0.41	7.02
9	McDowell Rd.	897227.03	777616.52	4" GAS	03/24/06	1674.69	1671.30		1 - 4 1/2" PE GAS	3.38	
10 (Elec.Trace)	McDowell Rd.	897206.79	777673.19	ELECTRONIC TRACING	03/24/06	1677.26	N/A		ELEC.TRACING OF ELECTRIC LINE	N/A	
11 (Elec.Trace)	McDowell Rd.	897204.17	778034.92	ELECTRONIC TRACING	03/24/06	1684.48	N/A		ELEC.TRACING OF ELECTRIC LINE	N/A	
12 (Elec.Trace)	McDowell Rd.	897202.21	778360.22	ELECTRONIC TRACING	03/24/06	1688.13	N/A		ELEC.TRACING OF ELECTRIC LINE	N/A	
13	McDowell Rd.	897287.95	778392.74	8" WATER	03/24/06	1691.96	1687.36		1 - 10" AC WATER	4.60	
14 (Elec.Trace)	McDowell Rd.	897202.43	778716.92	ELECTRONIC TRACING	03/24/06	1696.80	N/A		ELEC.TRACING OF ELECTRIC LINE	N/A	
SSMH N/O INTERSECTION	McDowell Rd.	897314.84	776082.49	SANITARY SEWER INVERT	03/24/06	1649.44	N/A	1641.19	SSMH INVERT MEASUREMENT	N/A	8.25
SSMH AT INTERSECTION	McDowell Rd.	897232.18	776082.56	SANITARY SEWER INVERT	03/24/06	1648.90	N/A	1640.36	INVERT MEASUREMENT	N/A	8.54
SSMH S/O INTERSECTION	McDowell Rd.	896919.65	776078.49	SANITARY SEWER INVERT	03/24/06	1643.84	N/A	1634.60	INVERT MEASUREMENT	N/A	9.24
SSMH E/O INTERSECTION	McDowell Rd.	897230.25	776533.13	SANITARY SEWER INVERT	03/24/06	1656.44	N/A	1646.55	INVERT MEASUREMENT	N/A	9.89

***Encountered Impenetrable Concrete Slurry in trench over Sewer Line - Measururement Shown is to bottom of concrete slurry in trench.

Sewer

Water

Kimley-Horn
and Associates, Inc.

Conflict	Station	Pipe Size (inches)	Material	Relocation/Support	MAG Spec	Refer to SP's	Comment	Referenced Plan
Basin Outlet (42-inch)								
	2+00	16	DIP	under	370	Yes	Sheet SD14	COM 2004,
Main Line								
	5+57	16	DIP	under	370	Yes	Under 54-inch diameter pipes	COM 2004,
	9+00	16	DIP	under	370	Yes		**COM 2004,**
	16+63	2		support	None	No	Cover of only 3'. Stub just inside ROW	
	22+98	8	ACP	under	370	No		COM 1982
	23+15	12	ACP	support	None	No		COM 1982
	36+22	8		under	370	No	Pothole not found? **COM 1982 calls this 8"**	**COM 1982**
	36+53	8	ACP	support	None	No	**COM 1980 and COM 1982 calls this 8-inch,** so no reference to SC	**COM 1980**, COM 1982 Ref A16987
	49+63	8	ACP	support	None	No		COM 1980, COM 1982 Ref A5446
	62+18	8	ACP	under	370	No		**COM 1982**
	62+47	8	ACP	under	370	No		**COM 1982**, COM 1998, Anderson Nelson 1985, COM 2004
	62+81	8	ACP	under	370	No	Stub at McDowell	**COM 1981**, COM 1998
	62+85	8	DIP	under	370	No		COM 1998, Anderson Nelson 1985
	62+86	8		under	370	No	Pothole not found?	
	62+96	20	DIP	under	370	Yes		**COM 1998**
	63+10	12	ACP	under	370	No		**Anderson Nelson 1985**, COM 1998
Basin Culvert (3-8X3)				under	370	No		
	1+65	16					No Conflict. RCBC goes over	**COM 2004,**
Connectors								
	12+00	8	ACP	under	370	No		**COM 1982**
	14+47	8	ACP	under	370	No		**COM 1982**
	20+00	8	ACP	under	370	No		**COM 1982**
	45+31	8	ACP	under	370	No		**COM 1982**

Bold = As-Builts used for construction

Kimley-Horn
and Associates, Inc.

Extents of Waterline Joint Restraint

Storm Drain Conflict Station	Waterline Size (inches)	Down Bend Restraining Length (ft)	Up Bend Restraining Length (ft)	Horizontal Restraining Length Below Trench (ft)	90 degree horizontal bend Restraining Length (ft)	Total Restraining Length (ft)
1+08	16	43	24	10	0	93
5+58	16	43	24	21	0	104
9+80	16	43	24	13	57	153
62+91	20	52	28	18	68	186

Additional Note:
Mechanical restraining systems shall be installed per City of Mesa Engineering and Design Standards

Restrained Joints: Restrained joints are required at all bends, elbows, tees, crosses, dead ends, stubs, curb stops, fire hydrants, taps, valve locations on large diameter water mains, etc where water flow changes direction or is stopped.

Acceptable restrained joint systems include the following:

- Thrust blocking per M.A.G. Standard Detail 380 for water mains that are six inches (6") through sixteen inches (16") in diameter.
- Ductile Iron Pipe (D.I.P.) joint restraint shall comply with M.A.G. Standard Detail 303.
- Restraining joints with tie rods per M.A.G. Standard Detail 302.
- Retainer glands of the "Megalug" Series 1100 or approved equal are acceptable. Retainer glands utilizing setscrews are not acceptable.
- Mechanical restraining systems such as Pacific States lock mechanical joint, Clow Super-lock joint, US Pipe TR-Flex Gripper ring, American Lock-ring restraining joint, Griffin snap-lock restraining joint or other approved equals as determined by the City Engineer.
- Flanged type restraining for above ground piping or piping within a vault.
- Continuously welded joints with variable pipe cylinder thickness for Concrete Cylinder Pipe water mains.

Note, When the water main is sixteen inches (16") or larger, the engineer shall provide on the plans the appropriate restraining details in accordance with M.A.G. Standard Detail 302-2.

Trench Backfill & Pavement Replacement: The engineer, architect or designer shall specify that the contractor is responsible for backfilling and replacing pavement in all street excavations per the City of Mesa Standard Detail M-19.4 and the Policy Statement for Street Trench Backfilling and Pavement Replacement, revised July 1, 1989. Copies of the policy statement are available online from the Engineering Division web pages at: http://www.cityofmesa.org/engineering/PS_Cover.asp

RESTRAINED LENGTHS, LR, FOR DUCTILE IRON PIPE

NOMINAL PIPE SIZE INCHES	HORIZONTAL BENDS			TEES		VERTICAL OFFSETS						DEAD ENDS
						90° BEND FITTINGS		45° BEND FITTINGS		22-1/2° BEND FITTINGS		
	90°	45°	22-1/2°	LRN=0'	LRN=10'	DOWN BEND	UP BEND	DOWN BEND	UP BEND	DOWN BEND	UP BEND	
4	18	7	4	30	8	31	18	13	7	6	3	31
6	25	10	5	43	20	44	25	18	10	9	5	44
8	32	13	6	56	34	58	32	24	13	11	6	58
10	38	16	8	68	45	69	38	29	16	14	8	69
12	45	19	9	80	57	81	45	34	19	16	9	81
14	51	21	10	91	68	92	51	38	21	18	10	92
16	57	24	11	103	79	104	57	43	24	21	11	104
18	62	26	12	113	90	115	62	48	26	23	12	115
20	68	28	14	125	100	126	68	52	28	25	14	126
24	79	33	16	145	121	147	79	61	33	29	16	147

RESTRAINED LENGTHS, LR, FOR DUCTILE IRON PIPE WITH POLYETHYLENE WRAP

NOMINAL PIPE SIZE INCHES	HORIZONTAL BENDS			TEES		VERTICAL OFFSETS						DEAD ENDS
						90° BEND FITTINGS		45° BEND FITTINGS		22-1/2° BEND FITTINGS		
	90°	45°	22-1/2°	LRN=0'	LRN=10'	DOWN BEND	UP BEND	DOWN BEND	UP BEND	DOWN BEND	UP BEND	
4	26	11	5	69	18	72	26	30	11	14	5	72
6	36	15	7	99	47	102	36	42	15	20	7	102
8	47	19	9	130	78	133	47	55	19	26	9	133
10	56	23	11	157	103	159	56	66	23	32	11	159
12	65	27	13	185	131	187	65	77	27	37	13	187
14	74	31	15	211	156	214	74	89	31	42	15	214
16	82	34	16	238	183	241	82	100	34	48	16	241
18	90	37	18	263	207	266	90	110	38	53	18	266
20	98	41	20	289	233	292	98	121	41	58	20	292
24	113	47	22	337	280	340	113	141	47	68	22	340

NOTES:

1. ALL JOINTS WITHIN THE SPECIFIED LENGTH LR MUST BE RESTRAINED. ALL LENGTHS ARE GIVEN IN FEET.
2. THE MAXIMUM TEST PRESSURE SHALL NOT EXCEED 200 PSI
3. THE MINIMUM DEPTH OF BURY SHALL BE 3' TO TOP OF PIPE.
4. RESTRAINED LENGTHS MAY BE REDUCED WHEN SUPPORTED BY ENGINEERING CALCULATIONS.

DETAIL NO.		STANDARD DETAIL		REVISED	DETAIL NO.
303-2	MARICOPA ASSOCIATION of GOVERNMENTS	ENGLISH	JOINT RESTRAINT FOR DUCTILE IRON AND POLYETHYLENE WRAPPED DUCTILE IRON WATER PIPES		303-2

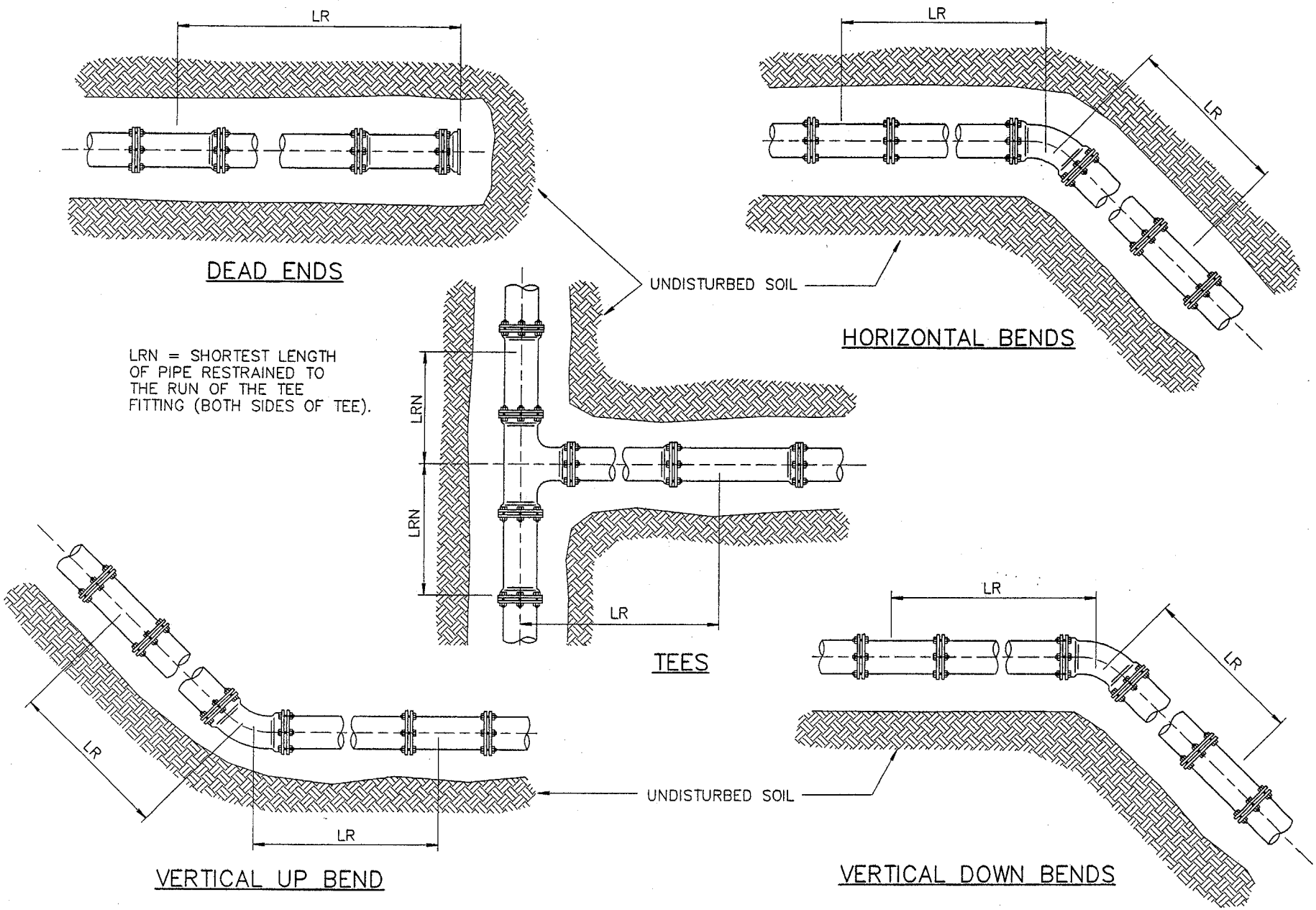

DETAIL NO.				REVISED	DETAIL NO.
303-1	MARICOPA ASSOCIATION of GOVERNMENTS	STANDARD DETAIL ENGLISH	JOINT RESTRAINT FOR DUCTILE IRON AND POLYETHYLENE WRAPPED DUCTILE IRON WATER PIPES		303-1

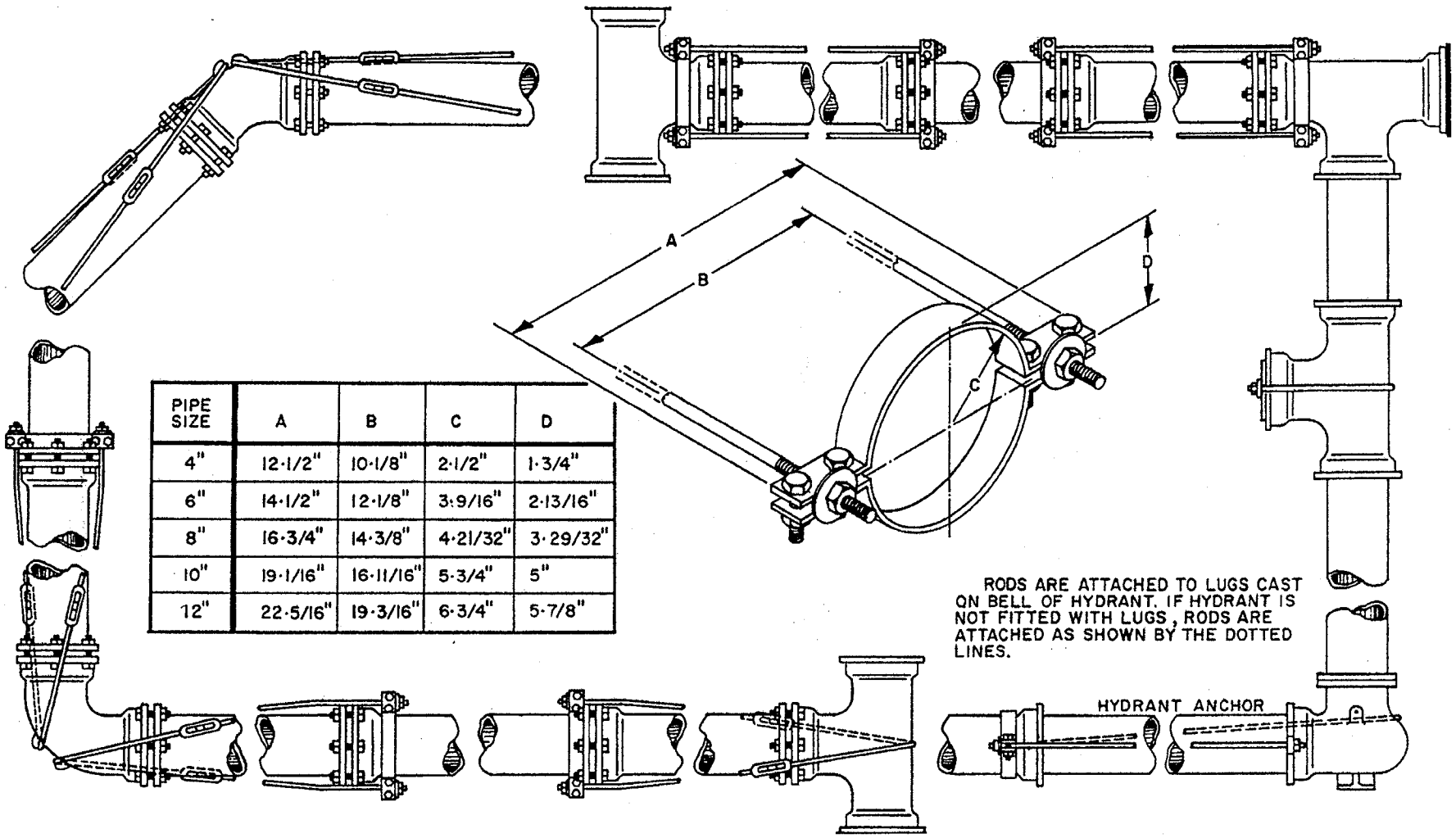

PIPE SIZE	A	B	C	D
4"	12·1/2"	10·1/8"	2·1/2"	1·3/4"
6"	14·1/2"	12·1/8"	3·9/16"	2·13/16"
8"	16·3/4"	14·3/8"	4·21/32"	3·29/32"
10"	19·1/16"	16·11/16"	5·3/4"	5"
12"	22·5/16"	19·3/16"	6·3/4"	5·7/8"

RODS ARE ATTACHED TO LUGS CAST ON BELL OF HYDRANT. IF HYDRANT IS NOT FITTED WITH LUGS, RODS ARE ATTACHED AS SHOWN BY THE DOTTED LINES.

SHEET 1 OF 2

DETAIL NO.				REVISED	DETAIL NO.
302-1	MARICOPA ASSOCIATION of GOVERNMENTS	STANDARD DETAIL ENGLISH	JOINT RESTRAINT WITH TIE RODS		302-1

1343
1370

Field Lock Gasket
Megalug

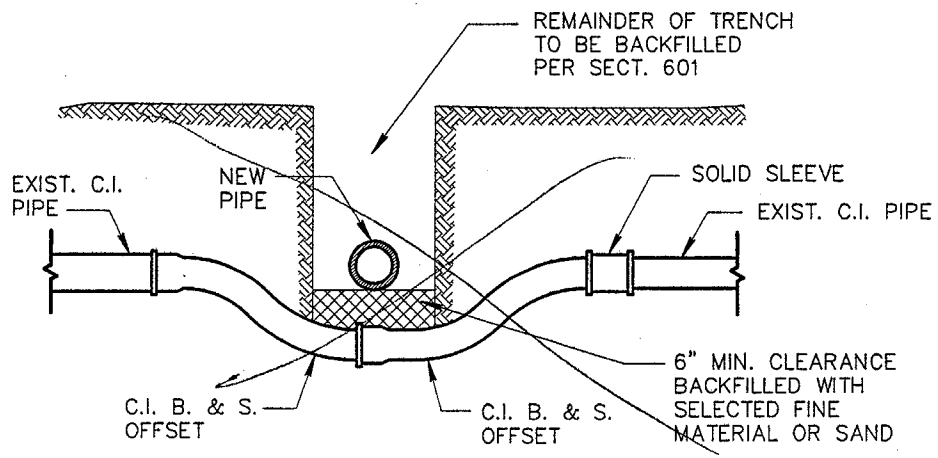

CAST IRON

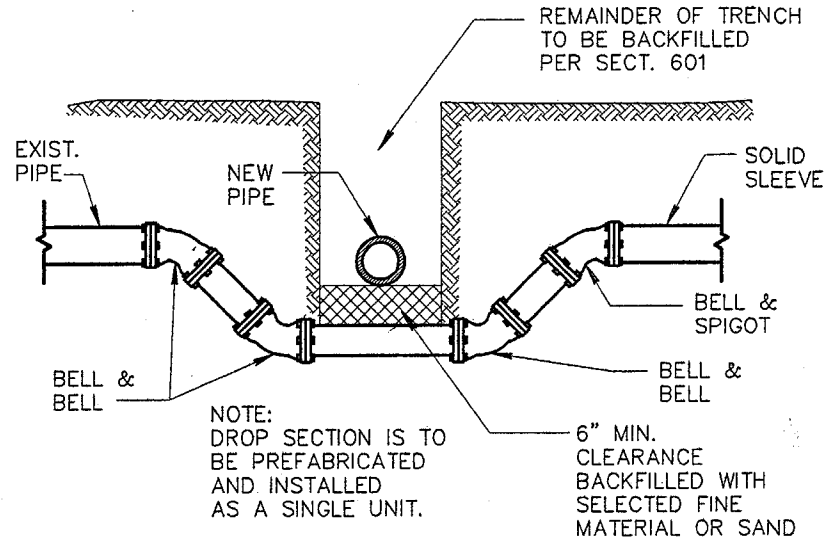

CAST IRON MECHANICAL JOINT

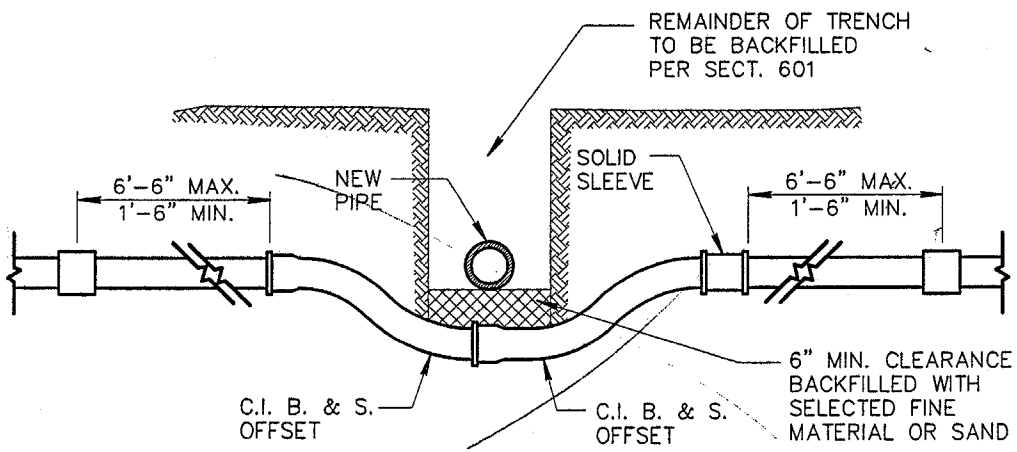

ASBESTOS CEMENT

what about 16" or 20" walks
ACP → DIP

NOTES:

1. THIS DETAIL COVERS MOVING OF WATER MAINS 2" TO 12" ONLY.
2. ~~THRUST BLOCKING~~ Joint Restraint AS PER DET. ~~380 & 381.~~ 303
3. IF OFFSET IS TO GO OVER OBSTRUCTION, JOINT RESTRAINTS MUST BE USED.
4. PIPE IS TO BE CAST IRON OR DUCTILE IRON.

DETAIL NO.				REVISED	DETAIL NO.
370	MARICOPA ASSOCIATION of GOVERNMENTS	STANDARD DETAIL ENGLISH	VERTICAL REALIGNMENT OF WATER MAINS		370

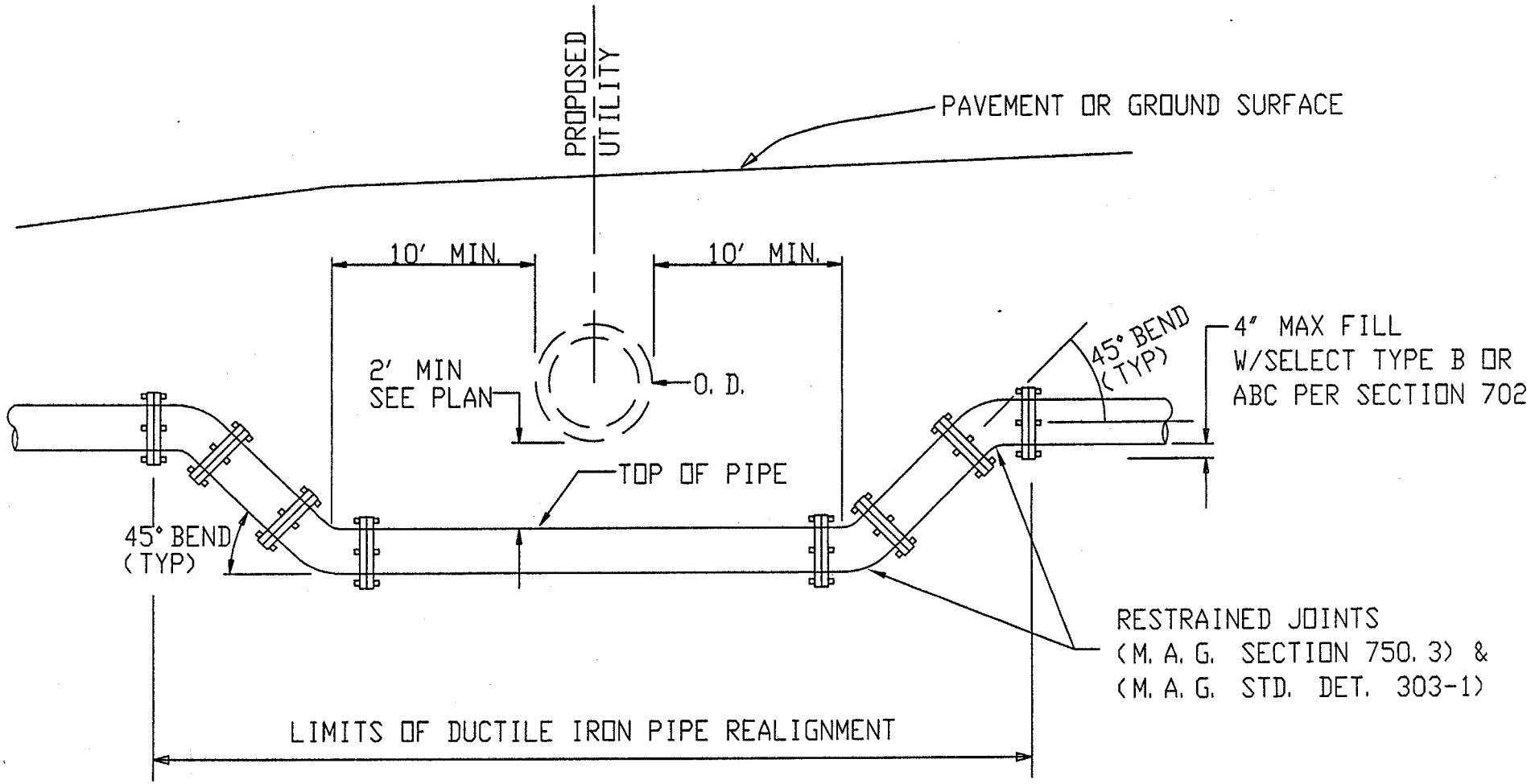

DETAIL NO.	City of Phoenix STANDARD DETAIL	VERTICAL REALIGNMENT OF WATER LINE	APPROVED Mario Saldamando CITY ENGINEER 08-08-03 DATE	DETAIL NO.
P1370				P1370

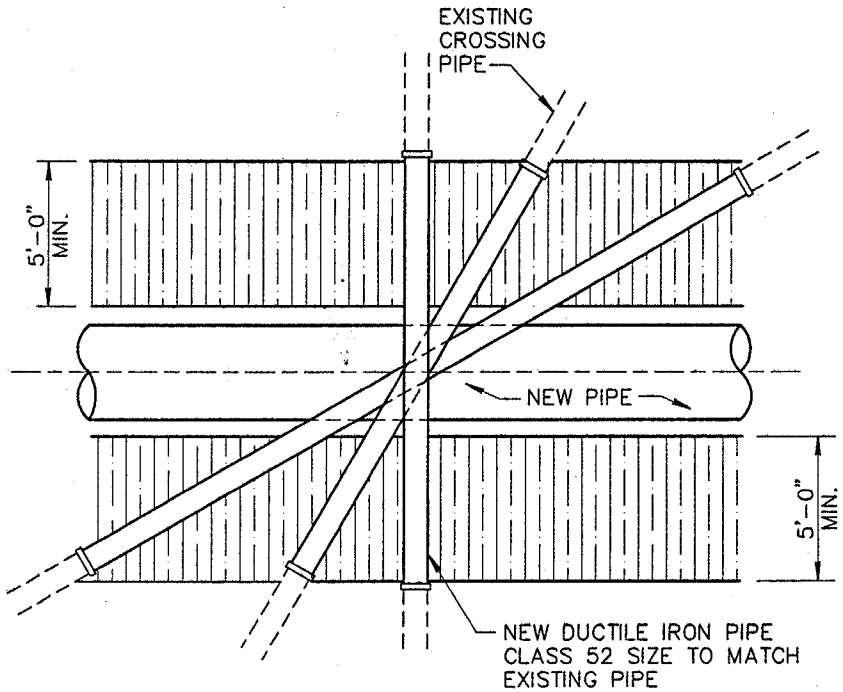

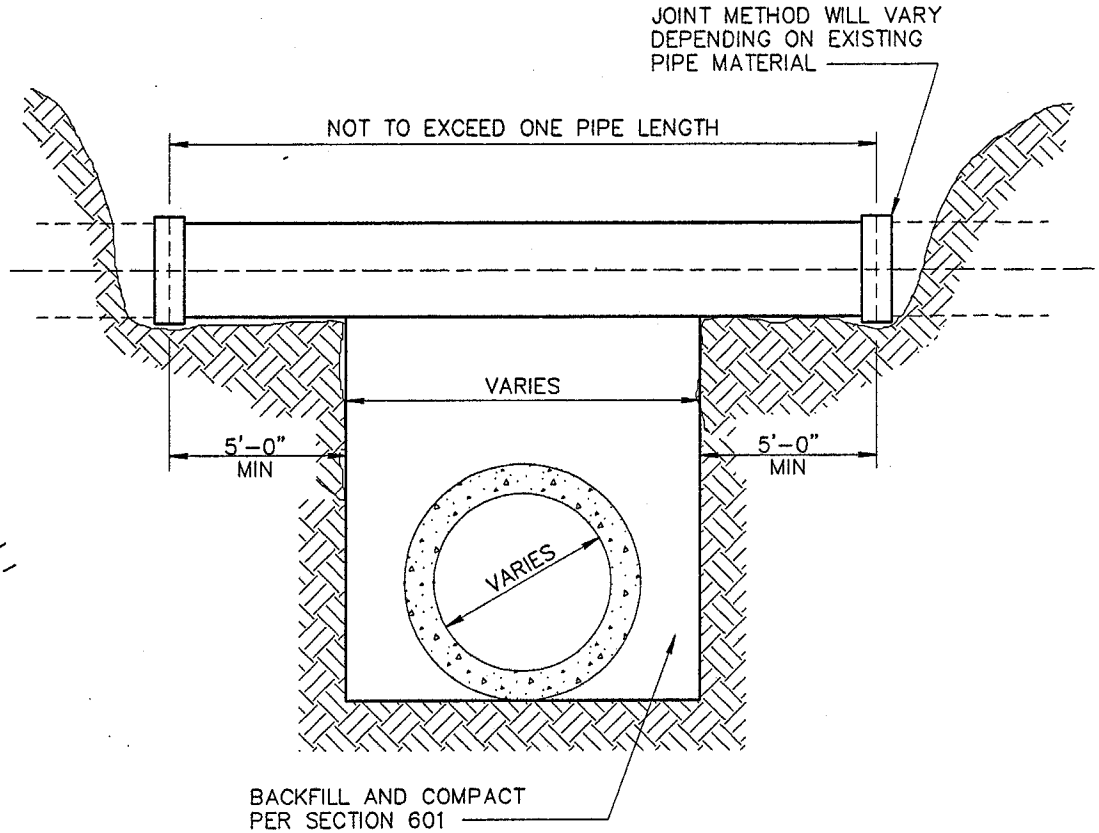

DETAIL NO.			REVISED	DETAIL NO.
403-3	MARICOPA ASSOCIATION of GOVERNMENTS — STANDARD DETAIL ENGLISH	ALTERNATE TO PIPE SUPPORT		403-3

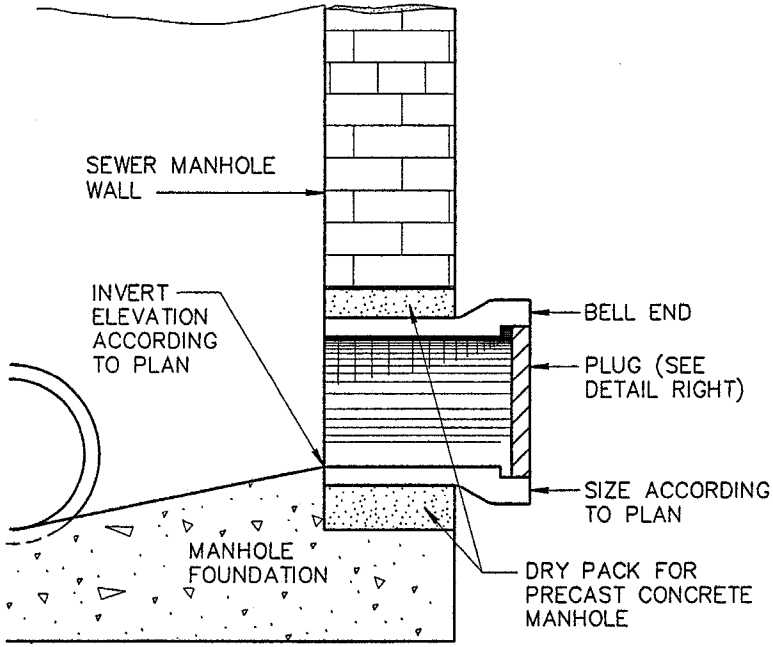

TYPICAL STUB OUT

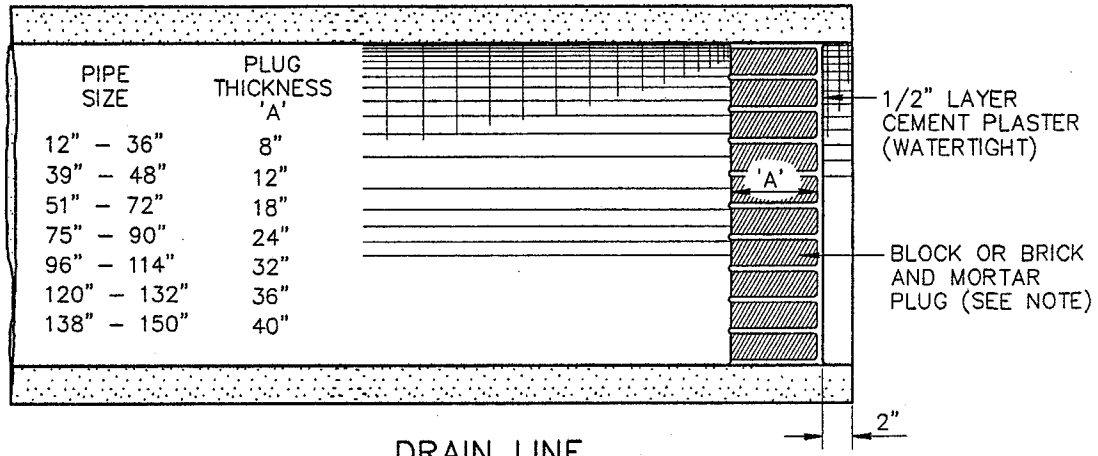

PIPE SIZE	PLUG THICKNESS 'A'
12" – 36"	8"
39" – 48"	12"
51" – 72"	18"
75" – 90"	24"
96" – 114"	32"
120" – 132"	36"
138" – 150"	40"

DRAIN LINE

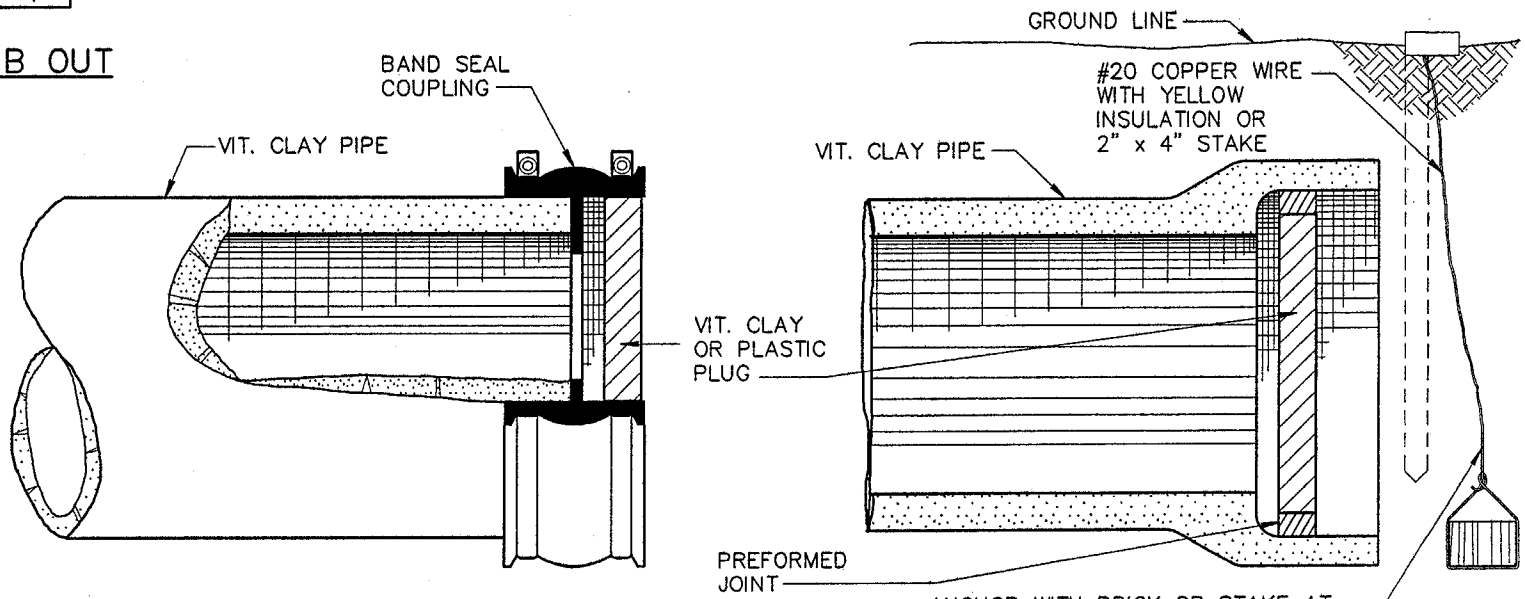

SEWER LINE

NOTES:

1. NOTE: COMPACT SOIL AT END OF PIPE TO 95% OF MAXIMUM DENSITY.
2. IF DEPTH OF COVER IS LESS THAN 5' OR GREATER THAN 10' INCREASE PLUG THICKNESS A MIN. OF 4".

DETAIL NO.			REVISED	DETAIL NO.
427	MARICOPA ASSOCIATION of GOVERNMENTS — STANDARD DETAIL ENGLISH	STUB OUT AND PLUGS		427

TESTHOLE DATA SUMMARY

REGISTERED LAND SURVEYOR
CERTIFICATE NO.
11751
DAVID SCOTT
HUSCHER
Date Signed 1/5/06
ARIZONA, U.S.A.

PREPARED BY:
TBE Group, Inc.
2236 West Shangri-La Rd.
Phoenix, AZ 85029
(602) 749-8550

DATE: January 5, 2005
PROJECT NAME: McDowell Road Basin & Storm Drain
PROJECT NO: 191131012
CLIENT NO: 2004C052

TBE GROUP

NOTE: The coordinate and elevation values provided below depict the actual utility location. Adjustments were made, as needed, to the requested location.

All Data is English

TBE Project Number: AZ-003-005-00

TH#	Street	Coordinates Northing	Coordinates Easting	Anticipated Utility	Date	Ground Elevation	Top Elevation	Bottom Elevation	Material Type, Outside Diameter and Comments	Depth of Cover
1	McDowell Rd	897332.12	775546.10	Power	12/09/05	1640.49	1637.66	1633.85	(3) 4 1/2", (3) 2 1/2", & (12) 3" Plastic Conduit Laid 42" Wide Electric, CATV & Telephone Joint Trench E-W	2.83
2	McDowell Rd	897332.06	775603.68	CATV	12/09/05	1642.59	1638.94	1638.27	(3) 4 1/2" & (3) 2 1/2" Plastic CATV Conduit E-W, Laid 26" Wide	3.65
3	McDowell Rd	897305.07	775645.96	Water	12/09/05	1642.48	1636.07	------	18" ACP Water Line E-W	6.41
4	McDowell Rd	897305.37	775647.42	Gas	12/09/05	1642.42	1637.17	------	4 1/2" Plastic Gas Line E-W	5.25
5	McDowell Rd	897330.74	775786.83	Power	12/09/05	1645.55	1642.13	1638.84	(3) 4 1/2", (3) 2 1/2", & (12) 3" Plastic Conduit Laid 42" Wide Electric, CATV & Telephone Joint Trench E-W	3.42
6	McDowell Rd	897330.85	775809.46	CATV	12/09/05	1646.11	1642.31	1641.91	(3) 4 1/2" & (3) 2 1/2" Plastic CATV Conduit E-W, Laid 31" Wide	3.80
6A	McDowell Rd	897334.85	775809.46	CATV	12/09/05	1647.19	1644.27	------	1/2" Direct Buried CATV Cable E-W	2.92
7	McDowell Rd	897300.18	775898.20	Water	12/09/05	1646.50	1639.98	------	18" ACP Water Line E-W	6.52
8	McDowell Rd	897299.42	775934.26	Water	12/12/05	1647.19	1640.77	------	18" ACP Water Line E-W	6.42
9	McDowell Rd	897300.54	775907.70	Gas	12/12/05	1646.65	1641.45	------	4 1/2" Plastic Gas Line E-W	5.20
10	McDowell Rd	897179.51	776064.01	Water	12/12/05	1647.63	1641.45	------	18" ACP Water Line N-S	6.18
11	McDowell Rd	897180.88	776025.00	Power	12/12/05	1648.85	1644.61	1641.71	(3) 4 1/2", (3) 2 1/2", & (12) 3" Plastic Conduit Laid 38" Wide Electric, CATV & Telephone Joint Trench N-S	4.24
12	McDowell Rd	897260.58	776063.77	Water	12/27/05	1649.32	1641.41	------	18" ACP Water Line N-S	7.91
13	McDowell Rd	897252.79	776024.92	Power	12/27/05	1648.35	1644.17	1641.91	(3) 4 1/2", (2) 2 1/2", & (12) 3" Plastic Conduit Laid 38" Wide Electric, CATV & Telephone Joint Trench N-S	4.18
14	McDowell Rd	897233.03	776284.02	Gas	12/20/05	1652.51	1648.99	------	4 1/2" Plastic Gas Line E-W	3.52
15	McDowell Rd	897290.34	776283.98	Water	12/20/05	1652.32	1647.38	------	9" ACP Water Line E-W	4.94
16	McDowell Rd	897278.94	776284.12	Power	12/20/05	1652.59	1649.68	1649.31	4 1/2", (2) 2", & (2) 4" Plastic Conduit Laid 20" Wide Electric & CATV Joint Trench E-W	2.91
17	McDowell Rd	897230.33	776583.99	Gas	12/13/05	1657.17	1654.18	------	4 1/2" Plastic Gas Line E-W	2.99

TESTHOLE DATA SUMMARY

REGISTERED LAND SURVEYOR
CERTIFICATE NO.
11751
DAVID SCOTT
HUSCHER
Date Signed 1/5/06
ARIZONA, U.S.A.

PREPARED BY:
TBE Group, Inc.
2236 West Shangri-La Rd.
Phoenix, AZ 85029
(602) 749-8550

DATE: January 5, 2005
PROJECT NAME: McDowell Road Basin & Storm Drain
PROJECT NO: 191131012
CLIENT NO: 2004C052

TBE GROUP

NOTE: The coordinate and elevation values provided below depict the actual utility location. Adjustments were made, as needed, to the requested location.

All Data is English

TBE Project Number: AZ-003-005-00

TH#	Street	Coordinates Northing	Coordinates Easting	Anticipated Utility	Date	Ground Elevation	Top Elevation	Bottom Elevation	Material Type, Outside Diameter and Comments	Depth of Cover
18	McDowell Rd	897277.73	776584.06	Power	12/13/05	1657.55	1654.01	1651.06	(3) 4 1/2", (3) 2 1/2", & (9) 3" Plastic Conduit Laid 26" Wide Electric, CATV & Fiber Optic Joint Trench E-W	3.54
18A	McDowell Rd	897281.33	776584.06	Fiber Optic	12/13/05	1657.55	1654.02	----	5" Plastic Fiber Optic Conduit E-W	3.53
19	McDowell Rd	897289.93	776583.64	Water	12/13/05	1656.50	1652.00	----	9" ACP Water Line E-W	4.50
20	McDowell Rd	897218.53	776746.17	Water	12/13/05	1658.39	1656.13	----	2" Galvanized Water Line N-S	2.26
21	McDowell Rd	897228.46	777083.95	Gas	12/13/05	1665.48	1660.75	----	4 1/2" Plastic Gas Line E-W	4.73
22	McDowell Rd	897293.10	777084.06	Water	12/14/05	1665.61	1660.71	----	9" ACP Water Line E-W	4.90
23	McDowell Rd	897308.01	777084.20	Power	12/14/05	1666.96	1657.28	1654.37	(3) 4 1/2" & (9) 3" Plastic Conduit Laid 34" Wide Electric & Telephone Joint Trench E-W	9.68
24	McDowell Rd	897216.45	777375.15	Power	12/14/05	1671.37	1667.03	----	4 1/2" Plastic Electric Conduit N-S	4.34
25	McDowell Rd	897216.95	777381.37	Water	12/14/05	1671.27	----	----	Dug 3 Feet Deep x 1 Feet Wide, No Water Found Soil Impenetrable Below 3 Feet Deep, Waterline Abandoned in This Area Per City of Mesa	----
26	McDowell Rd	897216.28	777398.47	Water	12/27/05	1671.48	1667.08	----	14" ACP Water Line N-S	4.40
27	McDowell Rd	897269.55	777669.11	Telephone	12/22/05	1676.99	1673.84	----	1 1/2" Direct Buried Telephone Cable E-W	3.15
28	McDowell Rd	897266.03	777669.08	Telephone	12/22/05	----	----	----	Dug 4 Feet Deep x 2 Feet Wide on Bluestake, No Telephone Found Soil Impenetrable Below 4 Feet Deep	----
28A	McDowell Rd	897268.03	777669.08	Telephone	01/04/06	1677.10	1676.30	1672.80	20" Wide x 42" High Concrete Encasement	0.80
29	McDowell Rd	897226.22	777668.90	Gas	12/14/05	1677.29	1673.87	----	4 1/2" Plastic Gas Line E-W	3.42
30	McDowell Rd	897215.78	777671.76	Power	12/14/05	1677.18	1675.78	1672.13	20" Wide x 44" High Concrete Encasement N-S	1.40
31	McDowell Rd	897214.29	777980.18	Gas	12/22/05	1683.80	1679.04	----	4 1/2" Plastic Gas Line E-W	4.76
32	McDowell Rd	897269.67	778417.01	Power	12/28/05	1691.85	1688.75	1687.75	4 1/2" & 2 1/2" Plastic Elec. & Telephone Conduit E-W, Laid 8" Wide	3.10
33	McDowell Rd	897273.90	778417.28	Telephone	12/22/05	1691.83	----	----	Telephone Joint Trench with Electric, See TH #32	----

REGISTERED LAND SURVEYOR
CERTIFICATE NO.
11751
DAVID SCOTT
HUSCHER
Date Signed 1/5/06
ARIZONA, U.S.A.

TESTHOLE DATA SUMMARY

PREPARED BY:
TBE Group, Inc.
2236 West Shangri-La Rd.
Phoenix, AZ 85029
(602) 749-8550

DATE: January 5, 2005
PROJECT NAME: McDowell Road Basin & Storm Drain
PROJECT NO: 191131012
CLIENT NO: 2004C052

TBE GROUP

NOTE: The coordinate and elevation values provided below depict the actual utility location. Adjustments were made, as needed, to the requested location.

All Data is English

TBE Project Number: AZ-003-005-00

TH#	Street	Coordinates		Anticipated Utility	Date	Ground Elevation	Top Elevation	Bottom Elevation	Material Type, Outside Diameter and Comments	Depth of Cover
		Northing	Easting							
33A	McDowell Rd	897278.15	778417.28	Storm Drain	12/28/05	1691.83	1690.73	——	24" Concrete Storm Drain	1.10
34	McDowell Rd	897273.06	778417.23	Telephone	12/22/05	1691.83	1689.25	——	1 1/2" Direct Buried Telephone Cable E-W	2.58
35	McDowell Rd	897223.94	778416.96	Gas	12/15/05	1691.55	1687.39	——	4 1/2" Plastic Gas Line E-W	4.16
36	McDowell Rd	897212.23	778566.48	Power	12/15/05	1694.08	1689.04	1688.16	(6) 3" Plastic Electric Conduits N-S	5.04
37	McDowell Rd	897211.50	778737.48	Water	12/19/05	1697.52	1693.85	——	18" ACP Water Line N-S	3.67
38	McDowell Rd	897265.97	778784.19	Telephone	12/16/05	1698.83	1697.33	1694.63	20" Wide x 32" High Concrete Encasement E-W (2) Plastic Conduit Visible Underneath	1.50
39	McDowell Rd	897267.78	778784.23	Telephone	12/16/05	1698.77	1695.37	1694.77	4 1/2" & (3) 2 1/2" Plastic Conduit Laid 19" Wide Electric & Telephone Joint Trench E-W	3.40
39A	McDowell Rd	897270.48	778784.23	Telephone	12/16/05	1698.57	1696.13	——	1 1/2" Direct Buried Telephone Cable E-W	2.44
40	McDowell Rd	897269.92	778784.20	Power	12/16/05	1698.59	——	——	Electric Joint Trench with Telephone, See TH #39	——
41	McDowell Rd	897201.23	778921.81	Power	12/16/05	1699.34	1695.05	——	(2) 3" Plastic Electric Conduit E-W, Laid 18" Wide	4.29
42	McDowell Rd	897270.79	778974.15	Telephone	12/19/05	1702.97	1701.97	1698.77	20" Wide x 38" High Concrete Encasement E-W (Cox Comm.) (2) Plastic Conduit Visible at Bottom of Duct Bank	1.00
43	McDowell Rd	897271.79	778974.22	Telephone	12/19/05	1702.95	——	——	See TH #42 & #44 for Utilities Found in This Area	——
44	McDowell Rd	897269.33	778974.17	Power	12/19/05	1702.99	1699.71	1699.20	4 1/2" & (3) 2 1/2" Plastic Conduit Laid 19" Wide Electric & Telephone Joint Trench E-W	3.28
45	McDowell Rd	897279.98	779619.88	Water	12/29/05	1716.13	——	——	Dug on Bluestake, 7 Feet Deep x 2 Feet Wide, No Water Found	——
45A	McDowell Rd	897285.88	779619.88	Water	01/04/06	1715.91	1710.24	——	9" ACP Water Line E-W	5.67
46	McDowell Rd	897267.98	779619.17	Telephone	12/22/05	1714.59	1711.15	——	1 1/2" Direct Buried Telephone Cable E-W	3.44
47	McDowell Rd	897207.07	780050.91	Water	12/19/05	1723.77	1720.61	——	9" ACP Water Line N-S	3.16
48	McDowell Rd	897207.38	780059.98	Telephone	12/19/05	1724.06	1721.68	——	1 1/2" Direct Buried Telephone Cable N-S	2.38
49	McDowell Rd	897206.44	780251.55	Telephone	12/21/05	1729.64	——	——	Bluestake Marked No Conflict	——

TESTHOLE DATA SUMMARY

REGISTERED LAND SURVEYOR
11751
DAVID SCOTT HUSCHER
Date Signed 1/5/06
ARIZONA, U.S.A.

PREPARED BY:
TBE Group, Inc.
2236 West Shangri-La Rd.
Phoenix, AZ 85029
(602) 749-8550

DATE: January 5, 2005
PROJECT NAME: McDowell Road Basin & Storm Drain
PROJECT NO: 191131012
CLIENT NO: 2004C052

TBE GROUP

NOTE: The coordinate and elevation values provided below depict the actual utility location. Adjustments were made, as needed, to the requested location.

All Data is English

TBE Project Number: AZ-003-005-00

TH#	Street	Coordinates Northing	Coordinates Easting	Anticipated Utility	Date	Ground Elevation	Top Elevation	Bottom Elevation	Material Type, Outside Diameter and Comments	Depth of Cover
50	McDowell Rd	897262.97	780384.33	Power	12/21/05	1732.31	1730.43	----	4" Plastic Electric Conduit	1.88
51	McDowell Rd	897265.48	780384.36	Telephone	12/21/05	1731.43	1729.22	----	1 1/2" Direct Buried Telephone Cable E-W	2.21
51A	McDowell Rd	897277.13	780384.36	Telephone	12/21/05	----	----	----	Dug on Telephone Duct Bank Bluestake 7 Feet Deep x 2 Feet Wide No Telephone Found	----
51B	McDowell Rd	897260.03	780384.36	Telephone	01/04/06	1732.86	1730.01	1729.01	(6) 2 1/2" Plastic Conduit E-W, Laid 16" Wide Possibly Cox CATV F.O.	2.85
52	McDowell Rd	897206.19	780376.89	Power	12/21/05	1731.66	1727.98	1725.86	24" Wide x 25" High Concrete Encasement	3.68
53	McDowell Rd	897277.45	780784.54	Water	12/21/05	1741.99	1738.75	----	13" ACP Water Line E-W	3.24
54	McDowell Rd	897264.86	780784.06	Telephone	12/21/05	1740.34	1737.95	----	1 1/2" Direct Buried Telephone Cable E-W	2.39
55	McDowell Rd	897262.23	780784.10	Telephone	12/21/05	1740.71	1738.23	----	4 1/2" Plastic Electric Conduit E-W	2.48
56	McDowell Rd	897268.70	781248.78	Water	12/29/05	1750.19	----	----	Dug 5 Feet Deep x 2 Feet Wide, No Water Found	----
56A	McDowell Rd	897263.40	781248.78	Water	12/23/05	1750.79	1748.84	----	1 1/2" Direct Buried Telephone Cable E-W Telephone Found at Original Bluestake Mark for Waterline	1.95
56B	McDowell Rd	897274.70	781248.78	Water	01/04/06	1752.63	1748.74	----	9" ACP Water Line E-W	3.89
57	McDowell Rd	897241.31	781275.19	Water	12/28/05	1752.86	----	----	Dug 6 Feet Deep x 2 Feet Wide on Bluestake, No Water Found	----
57A	McDowell Rd	897241.31	781301.09	Water	12/28/05	1753.44	1749.51	----	9" ACP Water Line N-S	3.93
58	McDowell Rd	897259.71	781312.79	Water	12/28/05	1752.85	1749.29	----	9" ACP Water Line E-W	3.56
59	McDowell Rd	897256.11	781309.09	Telephone	12/28/05	1753.41	1750.17	1749.67	(3) 2 1/2" Plastic Telephone Conduit E-W, Laid 14" Wide	3.24
60	McDowell Rd	897262.71	781312.09	Telephone	12/28/05	1751.37	1750.12	----	1 1/2" Direct Buried Telephone Cable E-W	1.25
61	McDowell Rd	897298.88	781364.69	Water	12/27/05	1755.51	1752.31	----	9" ACP Water Line N-S	3.20
62	McDowell Rd	897302.67	781370.27	Water	01/04/06	1755.59	----	----	Not Dug, No Bluestake or Evidence of Waterline at This Location	----
63	McDowell Rd	897306.25	781374.79	Water	12/27/05	1755.68	1747.93	----	18" ACP Water Line N-S	7.75

TESTHOLE DATA SUMMARY

REGISTERED LAND SURVEYOR
11751
DAVID SCOTT
HUSCHER
Date Signed 1/5/06
ARIZONA, U.S.A.

PREPARED BY:
TBE Group, Inc.
2236 West Shangri-La Rd.
Phoenix, AZ 85029
(602) 749-8550

DATE: January 5, 2005
PROJECT NAME: McDowell Road Basin & Storm Drain
PROJECT NO: 191131012
CLIENT NO: 2004C052

TBE GROUP

NOTE: The coordinate and elevation values provided below depict the actual utility location. Adjustments were made, as needed, to the requested location.

All Data is English

TBE Project Number: AZ-003-005-00

TH#	Street	Coordinates		Anticipated Utility	Date	Ground Elevation	Top Elevation	Bottom Elevation	Material Type, Outside Diameter and Comments	Depth of Cover
		Northing	Easting							
64	McDowell Rd	897305.98	781375.79	Gas	12/27/05	1755.63	1751.82	------	2 1/2" Plastic Gas Line N-S	3.81
65	McDowell Rd	897318.24	781392.73	Water	12/27/05	1756.97	1752.02	------	13" ACP Water Line N-S	4.95
66	McDowell Rd	897319.31	781395.40	Telephone	12/27/05	1757.38	1753.78	1751.88	(4) 1 1/2", 1", & 1/2" Direct Buried Cables Laid 10" Wide Electric & Telephone Joint Trench N-S	3.60

Structure No. 2

Kimley-Horn
and Associates, Inc.

647 = 100-year discharge
650 = Design Discharge
Two Barrels
325 = Per Barrel Design Discharge

W (ft) = minimum basin impact width
W (ft) = 8/3*D
D (ft) = 4.5
W (ft) = 12

$W/(A^{0.5}) = 2.86 * F^{0.575}$
$F = V / [(g * (A^{0.5}))^{0.5}]$

V (fps) = 12.7

A (ft2) = 15.904299
F = 1.1207201
W (ft) = 12.17823

ES-188 = 15

Use W (ft) = 24 For Two Barrels

Now analyze other components using the width of 12'

L (ft) = 4/3 * W = Length of basin
H (ft) = 3/4 * W = Depth of Basin
d (ft) = 1/6 * W = Height of end sill and height of pipe invert above apron slab
f (ft) = 3/8 * W = Height of baffle wall
a (ft) = 1/2 * W = Distance to upstream face of baffle wall
c (ft) = 1/2 * W = Height of sidewall and wingwall at junction
e (ft) = 1/12 * W = Width of splash brim

L (ft) = 16
H (ft) = 9
d (ft) = 2
f (ft) = 4.5
a (ft) = 6
c (ft) = 6
e (ft) = 1

Kimley-Horn and Associates, Inc.

Job McDowell Road Subject Impact Basin Sheet No. ___ of ___ Job No. 091131012

Designed by DEJ Date 4/8/06 Checked by ___ Date ___

Impact Energy Dissipator (NRCS Method)

647 = 100-year discharge

650 = Design Discharge (cfs)

325 = Design Discharge per barrel (cfs)

4.5' (54") = Pipe Diameter, D

W = 8/3 * D

W = 12' For one barrel

Confirm W

$\frac{W}{\sqrt{A}} = 2.86 F_r^{0.575}$

$F = V / (g * A^{0.5})^{0.5}$

V = 12.7 fps StormCAD

$A = \pi 4.5^2/4 = 15.9 ft^2$

F = 1.12

W = 12.2'

W = 12' OK

TOTAL W = 24' Two Barrels

Kimley-Horn and Associates, Inc.

Job McDowell Road Subject Impact Basin Sheet No. ____ of ____
Job No. 091131012
Designed by DEJ Date 4/4/06 Checked by ____ Date ____

Impact Basin

Riprap Size

Length = 4 x DIA

DIA = 4.5'

L = 4 x 4.5'

$\boxed{L = 18'}$

$$\frac{Q}{D^{5/2}} = \frac{325}{4.5^{5/2}} = 7.6$$

y = 2' TW Depth

$$\frac{y}{D} = \frac{2}{4.5} = .44$$

C = 6

T = 36 inches

$\boxed{T = 36 \text{ inches}}$

Backed Design Criteria from text

Riprap T = 1/6 W

Riprap, T = 2'

USE T = 3'

L = 18'

CUT OUTlet

Kimley-Horn and Associates, Inc.

Job McDowell Zeal Subject Impact Basin Sheet No. ____ of ____
Job No. 091131012
Designed by DET Date 4/3/06 Checked by ____ Date ____

Impact Basin Energy Dissipator

Check Flow over baffle

See ES 187

H, Height of basin = 9'

d, depth of invert below wall = 2'

f = baffle wall height = 4.5

t = hood wall thickness = 10" minimum

d+f+t = 2'+4.5' + 10/12 = 7.3'

Flow Depth = H - (d+f+t) = 9-7.33 = 1.667'

Check flow Capacity over weir

$Q = CLH^{1.5}$

C = 3

L = 24

H = 1.667

Q = 155 cfs over weir is possible

Check flow under baffle not including notches

$Q = C_D A \sqrt{2gH}$ Q = 730 cfs

$C_D = 0.67$

$A = 2' \times 24' = 48 ft^2$

$H = 9' - 1' = 8'$

IMPACT BASINS: General Layout and Hydraulic Design

Required drain and associated filter are not shown.

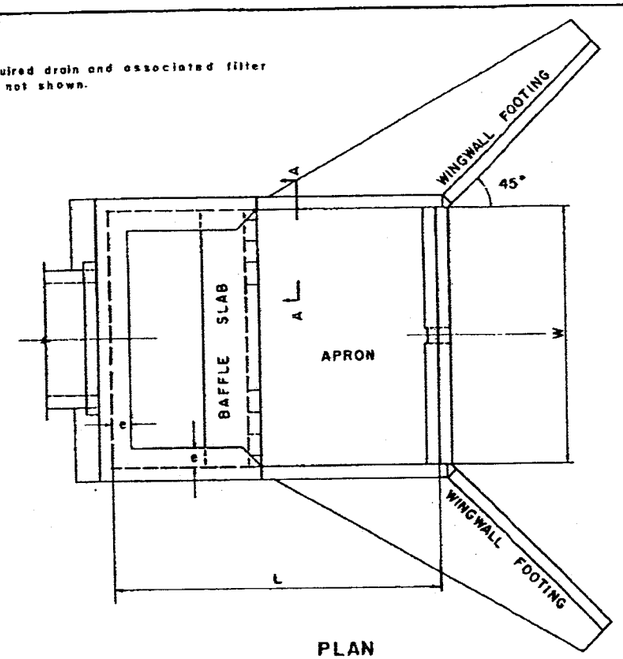

PLAN

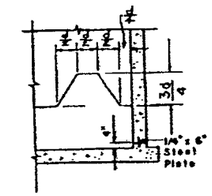

SECTION "A-A"

SYMBOLS

W	=	Width of basin	
L	=	Length of basin	= 4/3 W
H	=	Depth of basin	= 3/4 W
d	=	Height of end sill and height of pipe invert above apron slab	= 1/6 W
f	=	Height of baffle wall	= 3/8 W
e	=	Distance to upstream face of baffle wall	= 1/2 W
c	=	Height of sidewall and wingwall at junction	= 1/2 W
a	=	Width of splash brim	= 1/12 W

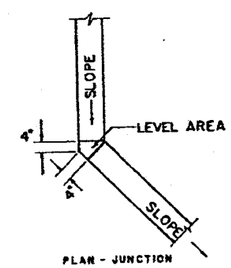

PLAN - JUNCTION SIDEWALL AND WINGWALL

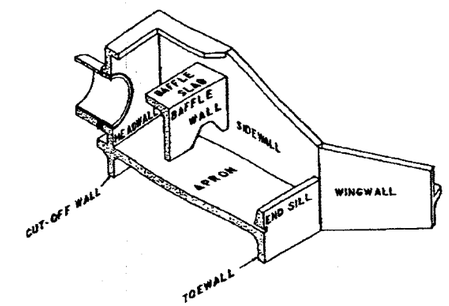

ISOMETRIC VIEW

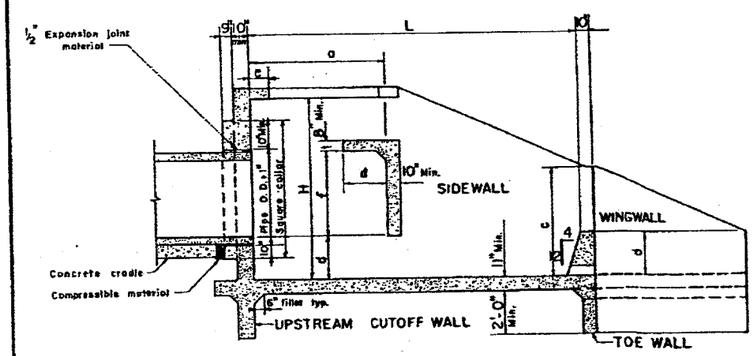

SECTION ON CENTER LINE

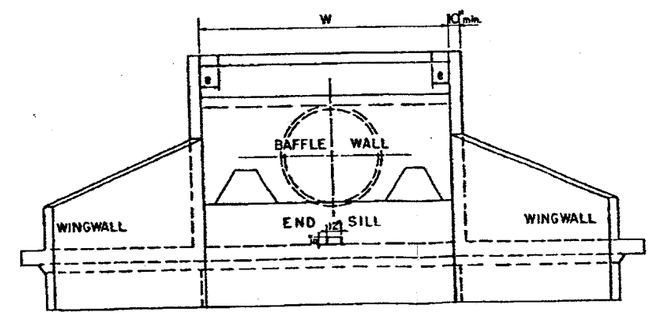

DOWNSTREAM ELEVATION

REFERENCE

Bureau of Reclamation, Report No. HYD-572, Progress Report No. XIII--Research Study on Stilling Basins, Energy Dissipators, and Associated Appurtenances--Section 14, Modification of Section 6 (Stilling Basin for Pipe or Open Channel Outlets--Basin XI)
by G. L. Beichley

U. S. DEPARTMENT OF AGRICULTURE
SOIL CONSERVATION SERVICE
ENGINEERING DIVISION - DESIGN UNIT

STANDARD DWG. NO.
ES-187
SHEET 1 OF 1
DATE 12-70

IMPACT BASINS: Recommended Riprap Sizes

D, Ft	$D^{5/2}$
1.5	2.756
2.0	5.657
2.5	9.882
3.0	15.588
3.5	22.918
4.0	32.000
4.5	42.957
5.0	55.902
5.5	70.943

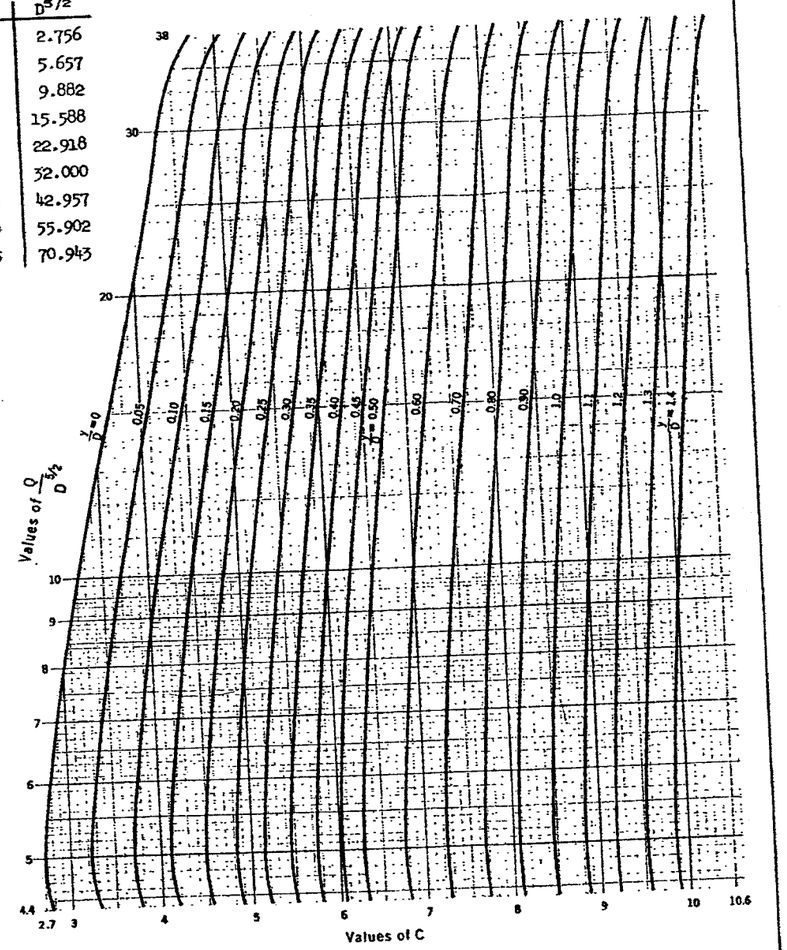

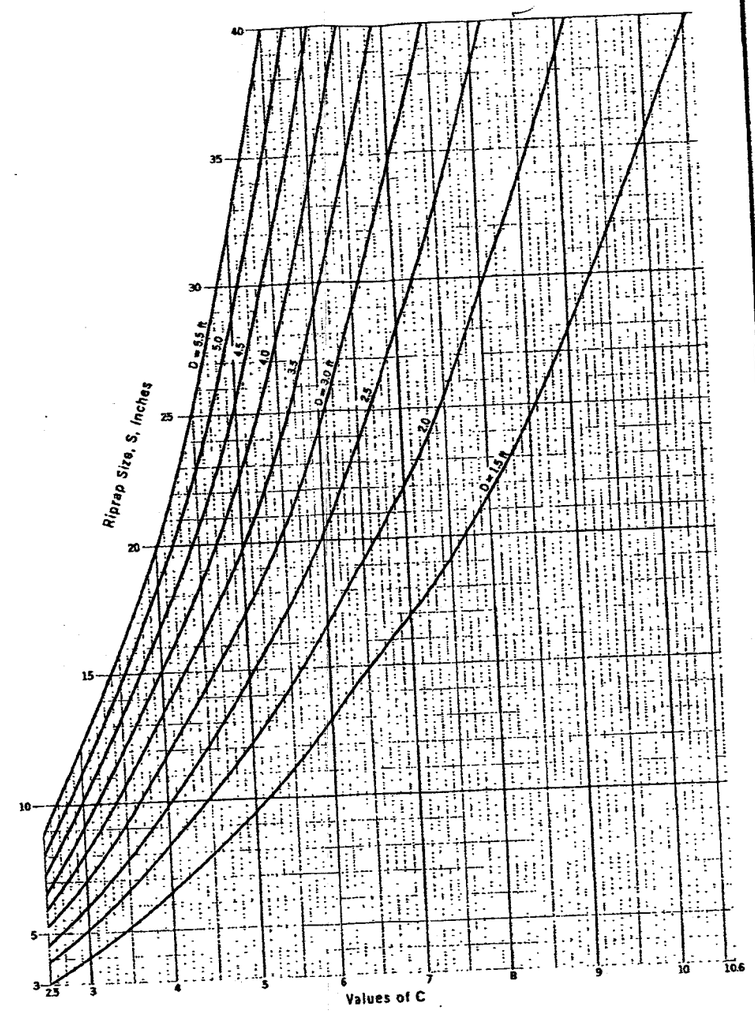

REFERENCE

Bureau of Reclamation, Report No. HYD-572, Progress Report No. XIII—Research Study on Stilling Basins, Energy Dissipators, and Associated Appurtenances—Section 14, Modification of Section 6 (Stilling Basin for Pipe or Open Channel Outlets—Basin XI) by G. L. Beichley

U. S. DEPARTMENT OF AGRICULTURE
SOIL CONSERVATION SERVICE
ENGINEERING DIVISION - DESIGN UNIT

STANDARD DWG. NO. ES-189
SHEET 1 OF 1
DATE 11-70

IMPACT STILLING BASIN
(USBR TYPE VI)

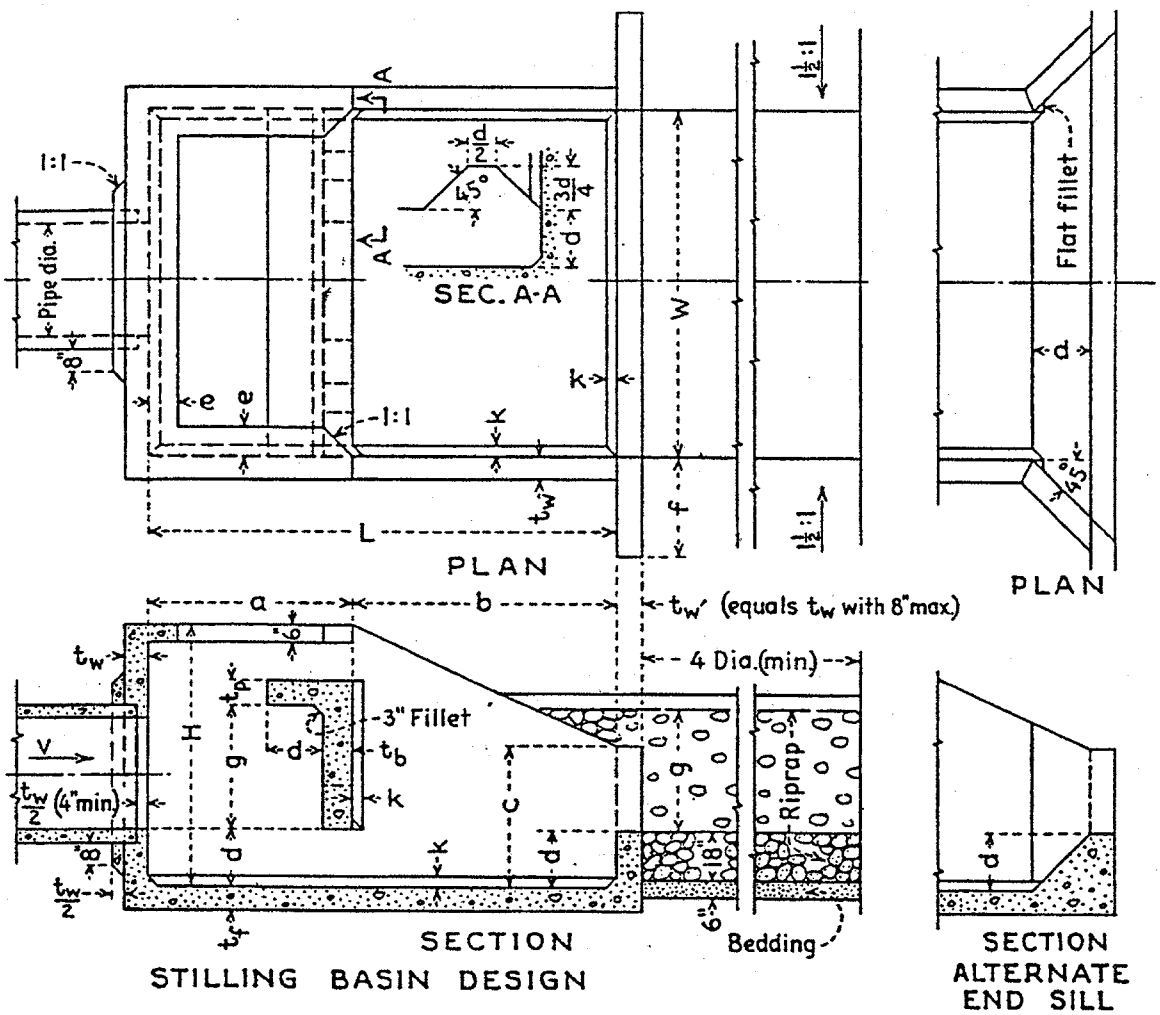

NOTE: 1. See Figure 1109 for design data

2. Refer to reference for structural details

Revision	Date

WRC ENGINEERING	REFERENCE: "Design of Small Canal Structures", USDI, BR, Denver 1974	FIGURE 1112

Kimley-Horn and Associates, Inc.

Job McDowell Road Subject Impact Basin Sheet No. ____ of ____
Job No. 091131012
Designed by DET Date 4/31 Checked by ____ Date ____

Impact Basin Design Notes

- Notches are for cleaning. No tailwater required for operation after long periods of non-us

- Full discharge over baffle. Check

- City of LA did more research

- Two or more Basins Can be Constructed side by side.

- Horizontal section Us = 4*D ie 18-20' but studies show it will work at s > 0

- If entrance is submerged or an hj will form in pipe, an air vent is recommended
  Dx = 1/6 D ie = 0.75' = 9 inch dia

- Cut off depth @ D/s end. (Channel scour)

- Top of sill = D/s channel elevation
  Slot to drain

- Riprap Length = 4xD = 18' Long
  up to walls of end sill
  T = 1/6 W =

Kimley-Horn and Associates, Inc.

Job McDowell Road Subject Outfall Structure Sheet No. ___ of ___
Job No. 091131012
Designed by DET Date 4/2/06 Checked by ___ Date ___

Impact Basin Design HEC-14

Design $Q = 325$ cfs

$D = 4.5'$

$V = 20.5$ fps $\quad Q = VA$

$S = 0.004$ ft/ft

Equivalent Flow Depth $\quad y_e = (A/2)^{1/2}$

$y_e = (15.9/2)^{1/2}$

$y_e = 2.82'$

Energy, $H_o = y_e + V_o^2/2g$

Energy, $H_o = 2.82 + 20.5^2/2(32.2)$

$H_o = 9.3'$

$F_r = V_o/(g y_e)^{0.5}$

$F_r = 2.14$

Fig VIII-C-2 $\quad H_o/W = 0.6$

$W = 15.8$

Table VIII C-3 to size Components

$W = 16'$

$h_1 = 12\text{-}3$	$L = 21\text{-}4$	$W_1 = 1\text{-}3$	$t_3 = 1\text{-}0$
$h_2 = 6\text{-}0$	$L_1 = 9\text{-}1$	$W_2 = 3\text{-}0$	$t_4 = 1\text{-}0$
$h_3 = 2\text{-}8$	$L_2 = 12\text{-}3$	$t_1 = 0\text{-}9$	$t_5 = 0\text{-}6$
$h_4 = 6\text{-}8$		$t_2 = 1\text{-}1$	

Kimley-Horn and Associates, Inc.

Job McDowell Road Subject Outfall Structure Sheet No. ___ of ___
Job No. 091131012
Designed by DEJ Date 4/2/06 Checked by ___ Date ___

Impact Basin HEC-14 Method

Energy Loss

Figure VIII-C-8

$F_r = 2.14$

$\frac{H_L}{H_0} = .45$

$H_L = 0.45 H_0 = 0.45(9.3')$

$H_L = 4.2'$

Exit Energy $H_E = H_0 - H_L$

$H_E = 9.3 - 4.2 = 5.1$

$H_E = d_B + V_B^2/2g$

$V_B = (Q/W)/d_B$

$V_B = 325/16\, d_B$

$V_B = 20.3\, d_B$

d_B	V_B	$d_B + V_B^2/2g$
2	40.6	27.6
1	20.3	7.4
.5	10.2	2.1
.8	16.25	5.1

$d_B = 0.8$ ft
$V_B = 16.25$ fps

Basin Culvert

Kimley-Horn and Associates, Inc.

Job McDowell Subject Basin Culvert Outlet Sheet No. ___ of ___
Job No. 091131012
Designed by DEJ Date 4/6/06 Checked by ___ Date ___

Basin Culvert Outlet

Design 66' Outlet as SAF Basin with riprap floor + boulders to be used as sidewalls of baffles

Q = 302 cfs

V = 35 fps

Outlet Pipe Dia = 66"

S = 6.4%

Fr = 4.81

Length of basin = L_B

$L_B = 4.5\, y_2 / Fr^{0.76}$

y_2 = depth in D/S Channel. We have a basin so assume $y_1 = y_2$. This will be conservative as basin fills

$y_1 = 2.2$ = depth of flow in pipe

$L_B = 4.5 \times 2.2 / 4.81^{0.76} = 3'$

Make $L_B = 15'$

Kimley-Horn and Associates, Inc.

Sheet No. ____ of ____

Job ____ Subject ____ Job No. ____

Designed by ____ Date ____ Checked by ____ Date ____

Chute Block Height, H_1

$H_1 = 0.75\ y_1$

$H_1 = 0.75\ (2.2) = 1.65$

$H_1 = 2'$ (2' Tall Landscape Rock)

Floor Block Distance = 45/3 = 15/3

$L_B/3 = 5'$

$B_1 = 12.7'$

Block away from Wall $3y_1/8 = .8' = 10''$

$B_2 = B_1 - 2*(.8) = 11.1'$

Floor Block W = 40-55% of W

= 4.44' - 6.1'

$B_1 = 12.7$ width of MAG HEADWALL

Kimley-Horn and Associates, Inc.

Job McDowell Subject Basin Culvert Outlet Sheet No. ____ of ____
Job No. 091131012
Designed by DEJ Date 4/6/06 Checked by ____ Date ____

B1 = 12.7' Per map Headwall width

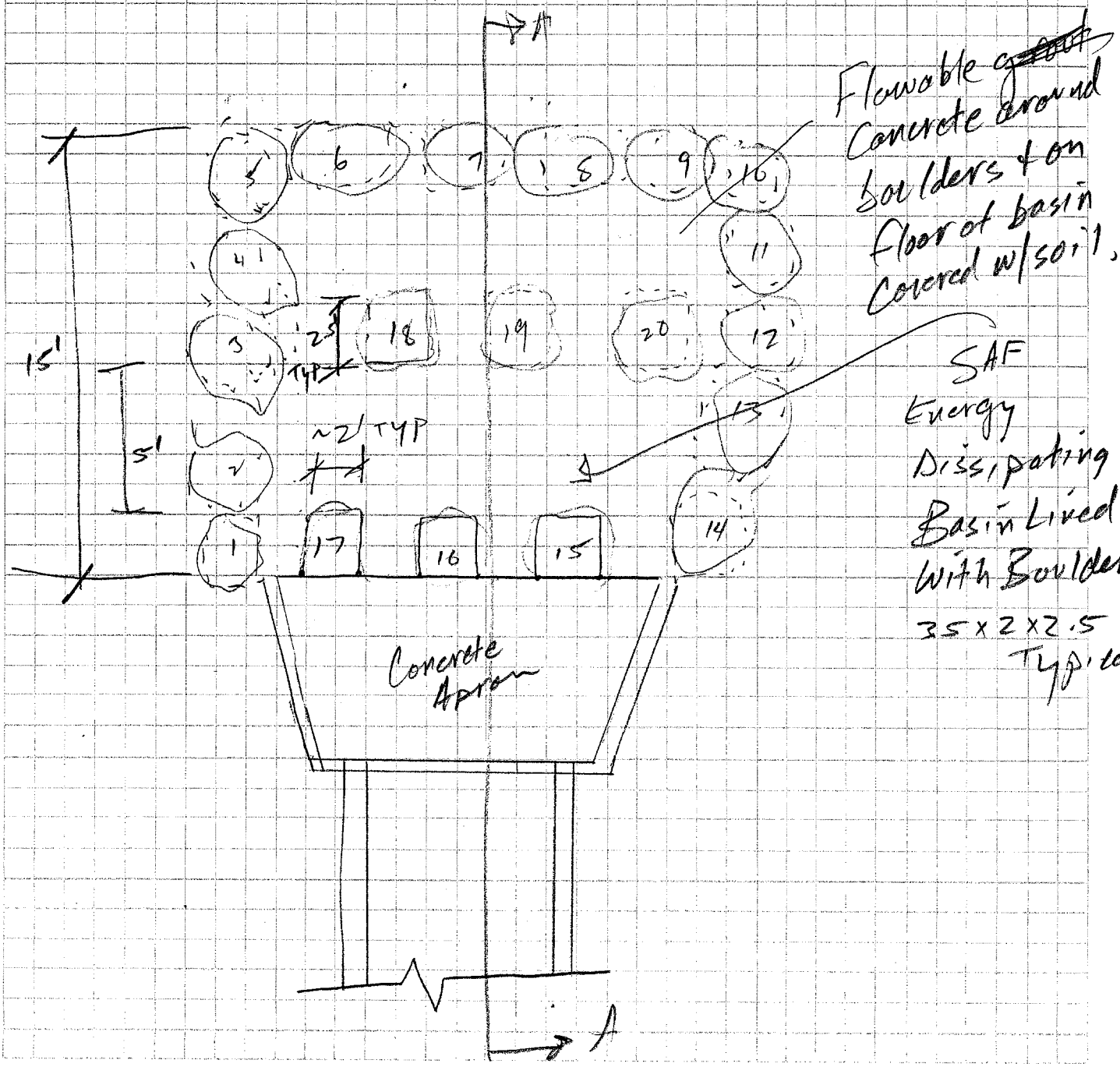

Kimley-Horn and Associates, Inc.

Job McDonnell Subject Basin Culvert Sheet No. ___ of ___
Job No. 09113012
Designed by DEJ Date 4/6/04 Checked by ___ Date ___

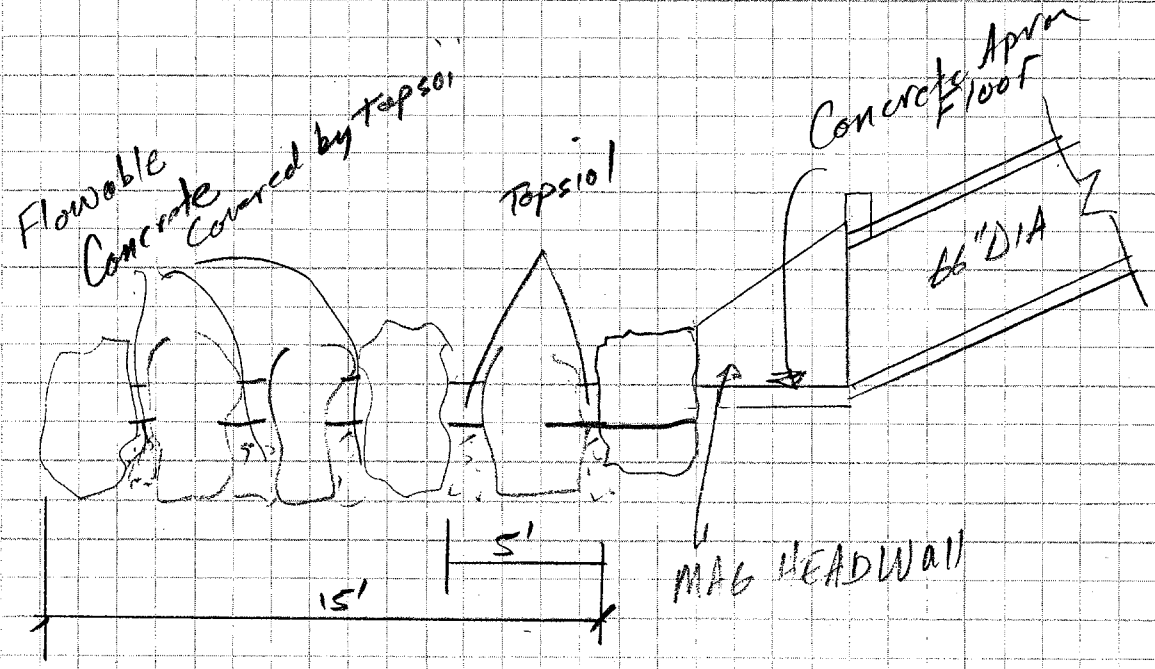

SECTION A-A

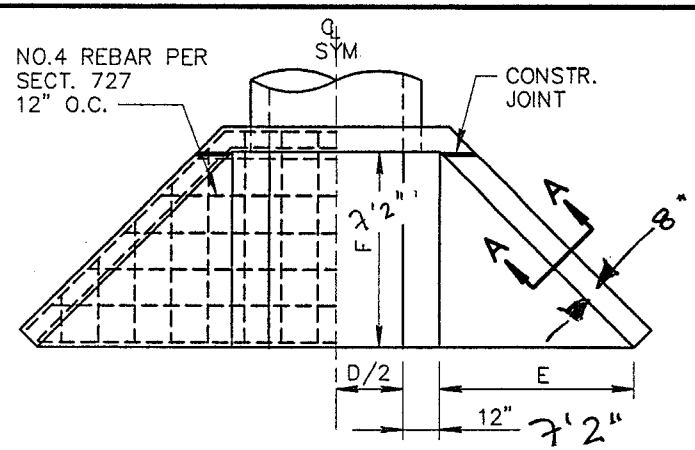

INLET HEADWALL

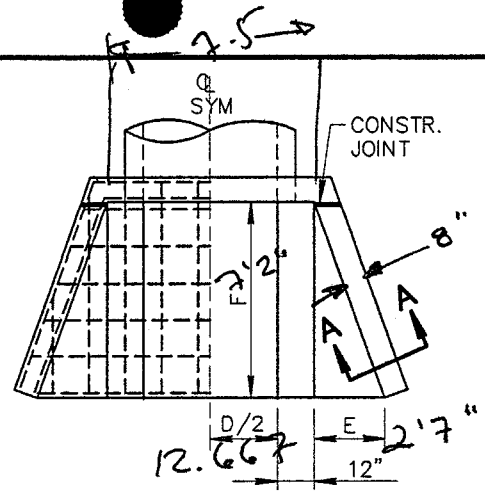

OUTLET HEADWALL

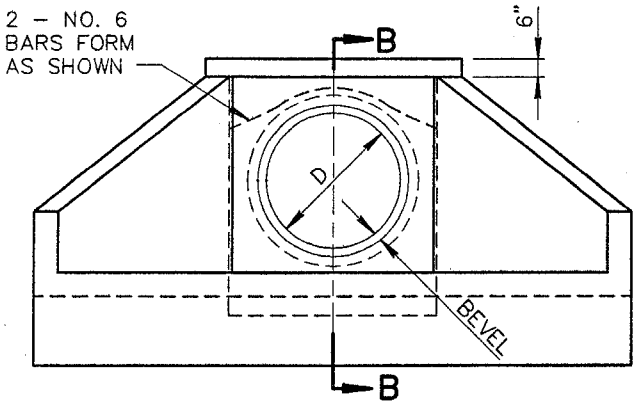

INLET HEADWALL FACE ELEVATION
OUTLET SIMILAR

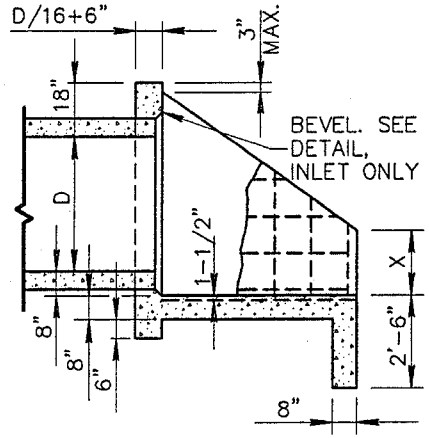

SECTION B–B

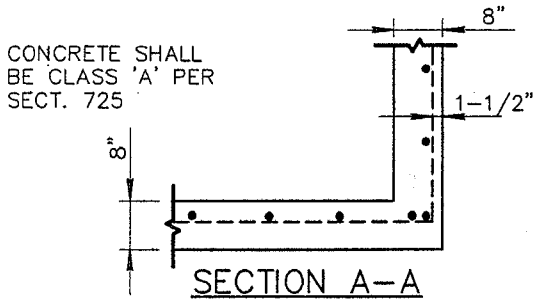

SECTION A–A

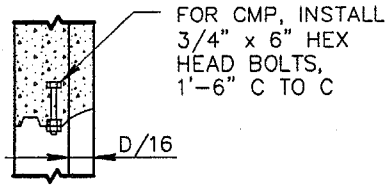

CMP BEVEL DETAIL

1:1 1/2 EMBANKMENT SLOPE				
D	TYPE *	DIMENSIONS		
		F	E	X
42"	1 (IN)	5'–2"	5'–2"	1'–9"
	2 (OUT)	5'–2"	1'–11"	1'–9"
48"	3 (IN)	5'–8"	5'–8"	1'–11"
	4 (OUT)	5'–8"	2'–1"	1'–11"
54"	5 (IN)	6'–2"	6'–2"	2'–1"
	6 (OUT)	6'–2"	2'–3"	2'–1"
60"	7 (IN)	6'–8"	6'–8"	2'–3"
	8 (OUT)	6'–8"	2'–5"	2'–3"
66"	9 (IN)	7'–2"	7'–2"	2'–5"
	10 (OUT)	7'–2"	2'–7"	2'–5"
72"	11 (IN)	7'–8"	7'–8"	2'–7"
	12 (OUT)	7'–8"	2'–9"	2'–7"
78"	13 (IN)	8'–2"	8'–2"	2'–9"
	14 (OUT)	8'–2"	3'–0"	2'–9"
84"	15 (IN)	8'–8"	8'–8"	2'–11"
	16 (OUT)	8'–8"	3'–2"	2'–11"

1:4 EMBANKMENT SLOPE				
D	TYPE *	DIMENSIONS		
		F	E	X
42"	17 (IN)	8'–8"	8'–8"	3'–0"
	18 (OUT)	8'–8"	3'–2"	3'–0"
48"	19 (IN)	8'–8"	8'–8"	3'–6"
	20 (OUT)	8'–8"	3'–2"	3'–6"
54"	21 (IN)	8'–8"	8'–8"	4'–0"
	22 (OUT)	8'–8"	3'–2"	4'–0"
60"	23 (IN)	9'–4"	9'–4"	4'–4"
	24 (OUT)	9'–4"	3'–5"	4'–4"
66"	25 (IN)	9'–8"	9'–8"	4'–9"
	26 (OUT)	9'–8"	3'–6"	4'–9"
72"	27 (IN)	9'–8"	9'–8"	5'–3"
	28 (OUT)	9'–8"	3'–6"	5'–3"
78"	29 (IN)	10'–0"	10'–0"	5'–8"
	30 (OUT)	10'–0"	3'–8"	5'–8"
84"	31 (IN)	10'–8"	10'–8"	6'–0"
	32 (OUT)	10'–8"	3'–11"	6'–0"

* (IN) REFERS TO INLET
(OUT) REFERS TO OUTLET

DETAIL NO.			REVISED	DETAIL NO.
501-3	MARICOPA ASSOCIATION of GOVERNMENTS — STANDARD DETAIL ENGLISH	HEADWALL 42" TO 84" PIPE		501-3

quate countermeasures would be required to demonstrate the suitability of soil cement prior to its approval for use on drop structures.

Addition of roughness elements on the face of a sloping concrete drop can provide increased energy dissipation. "Stepped" concrete has been successfully applied at spillways and drop structures. Roller compacted concrete is a methodology that can achieve the stairstep geometry on the face of a sloping drop. Reinforced concrete steps can be constructed by standard construction methods on small structures. Stepped drop structures have been found to be effective in dissipating the energy associated with low flows but fail to effectively dissipate energy of higher flows. Thus, stilling basin length for a stepped drop structure will be based upon the conventional length calculations for a sloping drop presented herein. Stepped drop structures will be no steeper than 2H:1V with a step height no greater than 2.5 feet and a step apron length of 6 feet. Construction of a drop with grouted boulders is another means of creating desirable roughness on the sloping face and in the stilling basin (see Figure 7.19).

FIGURE 7.19
GROUTED BOULDER PLACEMENT
(McLaughlin Water Engineers, Ltd.,1986)

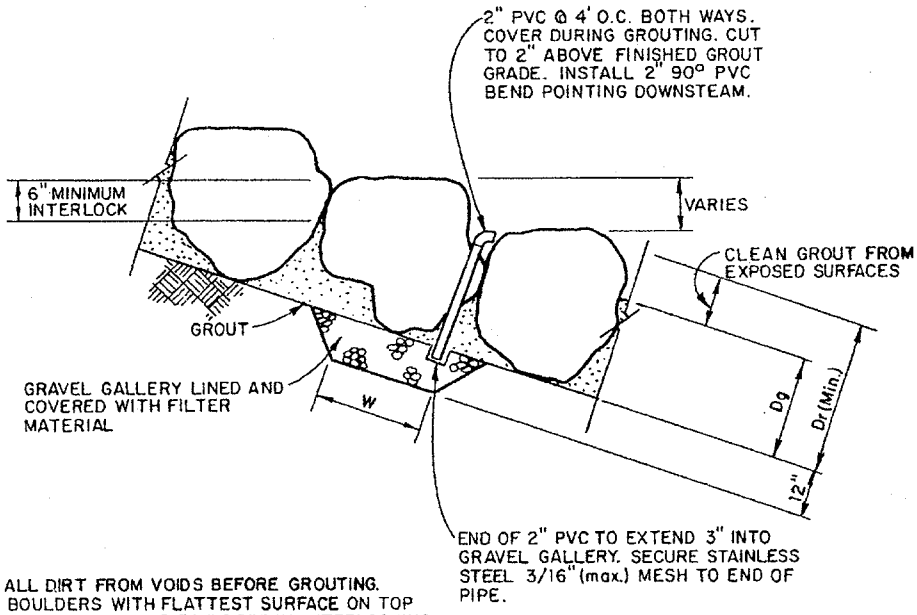

NOTES:

1) CLEAN ALL DIRT FROM VOIDS BEFORE GROUTING.
2) PLACE BOULDERS WITH FLATTEST SURFACE ON TOP AND HORIZONTAL. PLACE BOULDERS IN INTERLOCKING FASHION, TOUCHING ADJACENT BOULDERS AND MINIMIZING VOIDS.
3) DEPTH OF ROCK (Dr) AND DEPTH OF GROUT (Dg) AS CALLED OUT ON PLANS.
4) GROUT TO PENETRATE FULL DEPTH OF ROCK AND FILL ALL VOIDS.
5) CLEAN ALL GROUT FROM EXPOSED SURFACES.
6) GRAVEL GALLERIES ARE CALLED OUT ON PLANS AS "W" (width of gallery) GRAVEL GALLERY (ies) "S" (spacing between galleries) O.C.

However, because the structure is comprised of a structural slab with two components (boulders and grout), great care must be taken to design the structure to withstand uplift and to specify

boulder and grout material to assure full quality control in the field. Seepage analysis is required to determine a compatible combination of cutoff depth, location of the toe drain and/or other drains, and the thickness of rock and grout. Problems with rock specific gravity, durability and hardness are of concern. Gradation problems are largely eliminated because the boulders are specified to meet minimum physical dimensions and/or weights, which is much easier to observe and enforce in the field than with graded riprap.

The handling of the large boulders requires skilled work force and specialized equipment. Equipment similar to logging tongs, and specially modified buckets with hydraulically powered "thumbs" have been used in recent years and have greatly improved quality and placement rates. The careful placement of stacked boulders, so that the upstream rock is keyed in behind the downstream rock, and placed with a large flat surface horizontally, has been shown to be successful.

The greatest danger lies with a "sugar coated" grout job, where the grout does not penetrate the voids between the rock and the subgrade, leaving a direct piping route for water under the grout. This can easily occur when attempting to grout graded riprap, thus the need to use individual boulders that are larger in diameter than the grout layer so that the contractor and the inspector can see and have grout placed directly to the subgrade. The best balance appears to be boulders 33 to 50 percent greater in size than the grout thickness, but of an overall weight sufficient to offset uplift. Also, when holding grout to this level, the appearance will be much better.

The grout should have a minimum 4,000 psi compressive strength at 28 days, stone aggregate with a maximum dimension of one-half inch and a slump within a range of 4 to 7 inches. The water/cement ratio should not exceed 0.48. Addition of synthetic fiber reinforcement is also recommended to provide crack control, increased durability, and increased abrasion resistance.

Other USBR Basins - Some other stilling basins developed by the USBR (Peterka, 1984) have limited application. For example, Basin I is basically a horizontal concrete apron downstream of a sloping or vertical drop. This type of basin is applicable only to a concrete lined channel, and, as the USBR states, has wave problems that are difficult to overcome. Maintenance of sufficient tailwater depth is important to cause a hydraulic jump within a practical zone close to the toe of the drop. Generally, other types of USBR basins are better alternatives to Basin I.

USBR Basin V is a stilling basin with sloping apron, and provides dissipation as effective as that which occurs in the basin with a horizontal apron. Again, adequate tailwater is a must. This type of structure would have an application as a spillway into a pond with a permanent pool, so that minimum tailwater is essentially guaranteed.

Box Inlet Drop Structure - The box inlet drop structure may be described as a rectangular box open at the top and downstream end (Figure 7.20). Water is directed to the crest of the box inlet by earth dikes and headwalls. Flow enters over the upstream end and two sides and leaves the structure through the open downstream end. The long crest of the box inlet permits large flows to

Analysis of channel approach and crest hydraulics generally follows the guidelines presented in Section 7.3.2. Once water surface profiles have been determined, including tailwater determination and supercritical water surfaces down the sloping face, seepage uplift forces must be evaluated. Net uplift forces vary as a function of location along the drop, cutoff measures, drain gallery locations and water surface profiles through the basin.

For a stable structure, net uplift force from seepage must be countered by net forces in the downward direction. For a smooth concrete chute, downward forces are the buoyant weight of the concrete structure and the weight of water (a function of the depth of flow). Significant pressure differentials can occur with a combination of high seepage forces and shallow supercritical flow. Seepage analyses should be conducted using Lane's weighted creep methodology (Section 7.3.2), and suitable countermeasures designed. Such measures include cutoff walls, weep drain galleries and concrete slab thickness design. A range of flood discharges should be evaluated, since differential pressure relationships can vary with flow depth and location of hydraulic jump.

Construction Considerations:

There may be applications where sloping concrete drops are advantageous, but generally other drops such as baffle chutes or vertical drops are more appropriate for a wider range of applications. The design guidance provided by the literature is clear and relatively easy to use, but the implementation is often difficult or impractical. This basically has to do with providing basin depth without creating a maintenance problem and less flexibility in adapting to varying bed conditions.

The integrity of the cutoff is important as seepage and resultant uplift forces are key concerns. Uncontrolled underflow could easily lift a major concrete slab.

The stilling basin should be designed to drain completely, to eliminate nuisances related to ponded water, such as mosquito breeding and sediment/debris accumulation.

Considerations relating to general concrete construction are the same as discussed previously for baffle chute drops. Public acceptability is likely to be low in urban areas, as the sloping concrete face is inviting for bicyclists, roller skaters, and skateboard enthusiasts.

Other Types of Drop Structures

There are numerous other types of drop structures for specific applications in drainage design. The four types of structures presented above are appropriate for the majority of situations to be encountered in Maricopa County. Some possible variations or modifications are presented below along with a few specialized types.

Sloping Drop Variations - The use of soil cement, roller compacted concrete, and grouted boulders are possible variations in sloping drop design. The primary concern with soil cement is its ability to resist the high abrasive action of turbulent flow associated with a drop structure. Ade-

Worksheet for Circular Pipe - 2

Project Description

Friction Method	Manning Formula
Solve For	Normal Depth

Input Data

Roughness Coefficient	0.012	
Channel Slope	0.06400	ft/ft
Diameter	5.50	ft
Discharge	302.00	ft^3/s

Results

Normal Depth	2.17	ft
Flow Area	8.70	ft^2
Wetted Perimeter	7.47	ft
Top Width	5.38	ft
Critical Depth	4.78	ft
Percent Full	39.4	%
Critical Slope	0.00630	ft/ft
Velocity	34.70	ft/s
Velocity Head	18.71	ft
Specific Energy	20.88	ft
Froude Number	4.81	
Maximum Discharge	989.95	ft^3/s
Discharge Full	920.28	ft^3/s
Slope Full	0.00689	ft/ft
Flow Type	SuperCritical	

GVF Input Data

Downstream Depth	0.00	ft
Length	0.00	ft
Number Of Steps	0	

GVF Output Data

Upstream Depth	0.00	ft
Profile Description		
Profile Headloss	0.00	ft
Average End Depth Over Rise	0.00	%
Normal Depth Over Rise	39.42	%
Downstream Velocity	Infinity	ft/s
Upstream Velocity	Infinity	ft/s

Worksheet for Circular Pipe - 2

GVF Output Data

Normal Depth	2.17	ft
Critical Depth	4.78	ft
Channel Slope	0.06400	ft/ft
Critical Slope	0.00630	ft/ft

Basin Outlet Culvert

Kimley-Horn and Associates, Inc.

Job McDowell Subject Basin outlet Orifice Plate Sheet No. ____ of ____

Job No. 091131012

Designed by DEJ Date 4/1/06 Checked by ____ Date ____

48" Basin Outlet Orifice Plate Detail

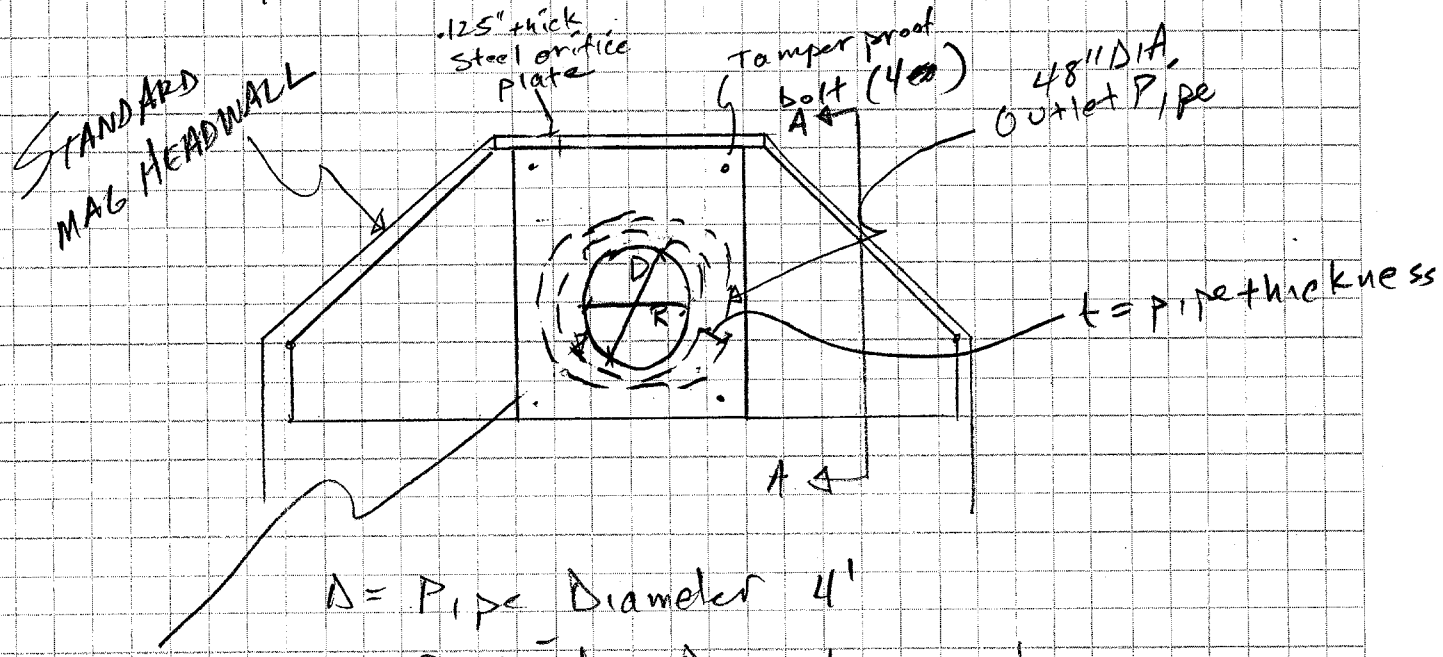

D = Pipe Diameter 4'

R = Restrictor Diameter per Jaron

in diameter orifice opening

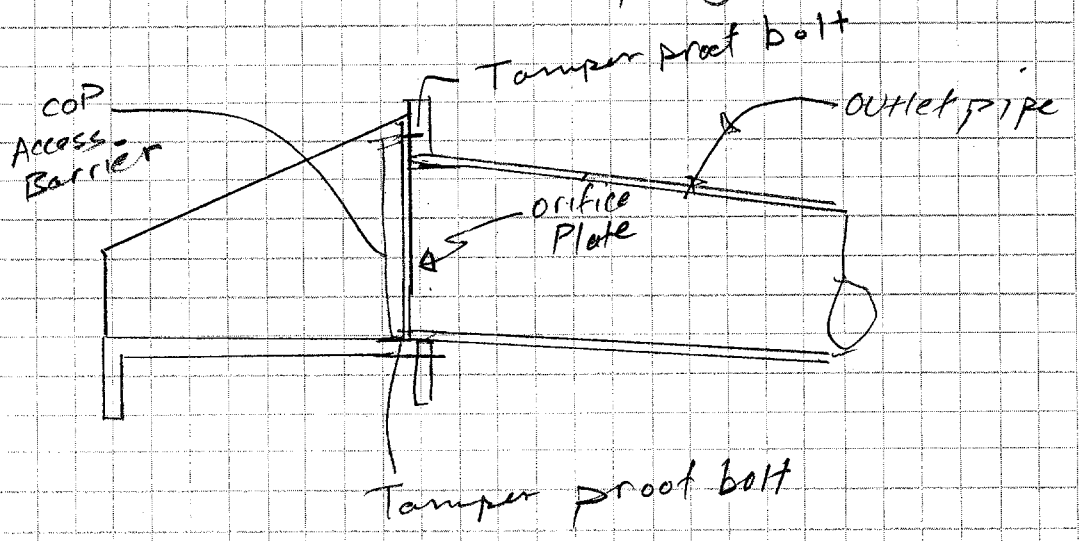

the requirements of the permitted release rates at the required volume and include proper provisions for maintenance and reliability.

Primary outlet structures, particularly those controlling multiple storm events, are often special design structures unique to specific site applications. Furthermore, consideration must be given to structural adequacy and flotation under hydrostatic loads.

FIGURE 8.5
ORIFICE PLATE DETAIL
(Adapted from WRC Engineering, 1987)

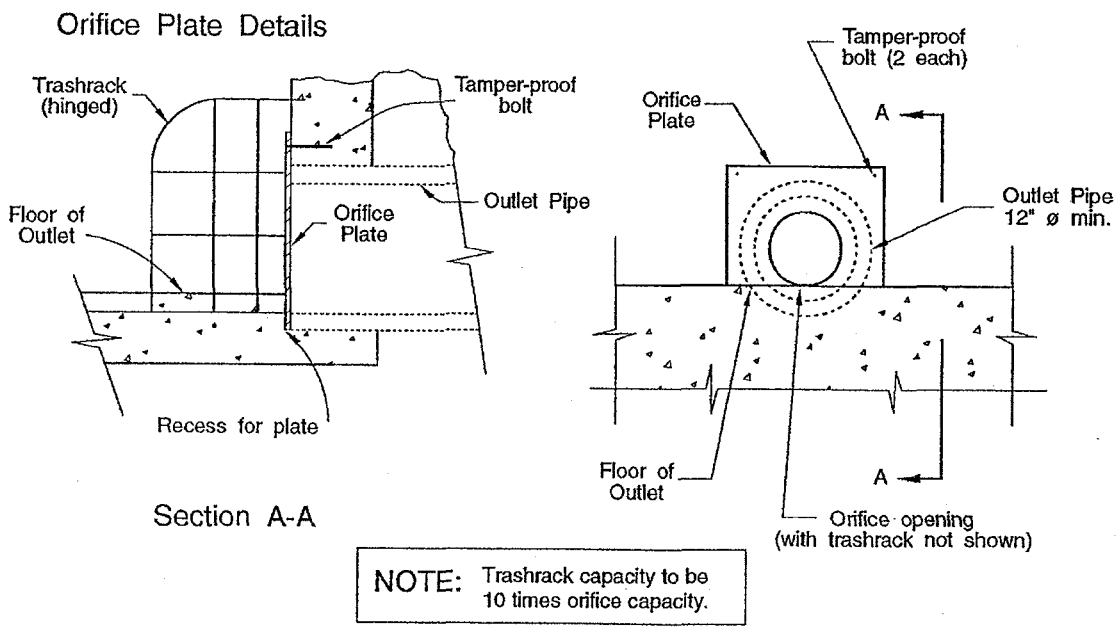

Trashracks - Trashracks shall be provided to inlets of pipe and orifice outlet structures. See Chapter 7 for hydraulic analysis guidelines and Chapter 1 for safety considerations.

Energy Dissipation at Outlet - Adequate energy dissipation measures shall be provided at the downstream end of primary outlet structures. Such measures shall be designed to control local scour at the pipe outlet and to reduce velocities to pre-development conditions prior to exiting onto the downstream property.

Emergency Spillways - Emergency spillways are normally surface overflow weirs, channels, or combinations thereof, provided for the safe overflow and routing of floodwaters under unusual circumstances. Such situations include the blockage or malfunction of the primary outlet structure or the occurrence of a storm event larger than that for which the facility was designed. Consideration must be given to the layout and configuration of the emergency spillway so that excess flow is safely released and conveyed without increasing flood hazards to adjacent properties and

~~Inlet Channel~~

Basin Emergency Spillway

Kimley-Horn and Associates, Inc.

Job McDowell Road Subject Basin Design Sheet No. ___ of ___
Designed by DEJ Date 4/1/04 Checked by ___ Date ___ Job No. 091131012

Basin Emergency Spillway

Design Guides

1- Safe overflow under unusal circumstances such as PO blockage or event larger than design.

2- Same manner of discharge release as prior to project (c At Wash Location

3- Must be able to convey unattenuated 100-year peak discharge at non-erosive velocities.

4- Embankments > 2.5' high considered high hazard potential (FCDMC.8-21)

5- Erosion Control necessary

6- Energy Dissipation at toe

Kimley-Horn and Associates, Inc.

Job McDowell Road Subject Basin Design Sheet No. ___ of ___
Designed by DEJ Date 4/1/06 Checked by ___ Date ___ Job No. 091131012

Maximum Q into basin = 302 cfs overflow from storm drain

Offline retention basin

- Assume 48"- PO is plugged. Find Peak Q required to pass 100-year flow w/o over topping basin.

- Use Broad crested weir

100 year WSEL = 1639.7

Top of embankment = 1641.0

Maximum H = 1.3'

C = 3.0

Assume L = 50'

Capacity Max $Q = CLH^{1.5}$

Max $Q = 3 * 50 * 1.3^{1.5}$

Max Q = 222

- Maximum Spillway Capacity - 222 cfs.

Put a rating curve for the weir into HEC-1 to ensure basin is not overtopped during 100-year event.

Kimley-Horn and Associates, Inc.

Job McDowell Subject Basin Design Sheet No. ___ of ___
Designed by DEJ Date 4/1/06 Checked by ___ Date ___ Job No. 091131012

Basin Emergency Spillway

ELEV	y	Q (cfs)
1639.7	0	0
1640.0	0.3	25
1640.5	0.5	107
1641	1.3	222

Now, put this rating curve into HEC-1

Assume $y = H$

$H = y + \frac{V^2}{2g}$ but assuming $y = h$ in this case is conservative.

HEC-1 RATING CURVE

SV - No Change

SE - No Change

SQ = 0 @ 1639.7

= 25 @ 1640.0

= 222 @ 1641.0

HEC-1

PEAK Q = 164 cfs @ T 12.5

PEAK V = 9 @ Time 12.5

Peak Stage = 1640.7 @ Time 12.5

Residual Freeboard = 0.3'

Kimley-Horn and Associates, Inc.

Job McDonell Subject Basin Design Sheet No. ____ of ____
Designed by DEJ Date 4/1/06 Checked by ____ Date ____ Job No. 091131012

Basin Emergency Spillway

So, Design Basin ES

Depth, y = 1.3'

Width, W = 50'

Max ~~Design~~ Q = 225 cfs

Design, Q = 165 cfs

Total Freeboard = 1.3'. Residual Freeboard 0.3'

For 100-year storm, with outlet plugged.

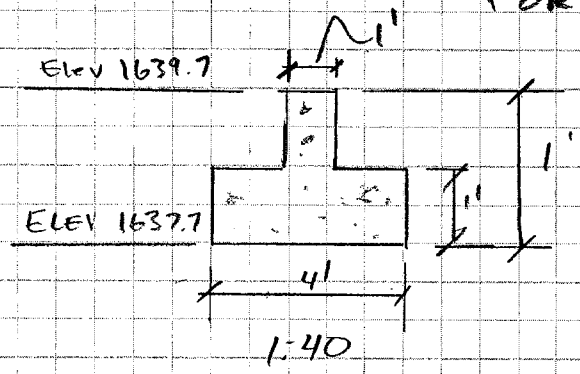

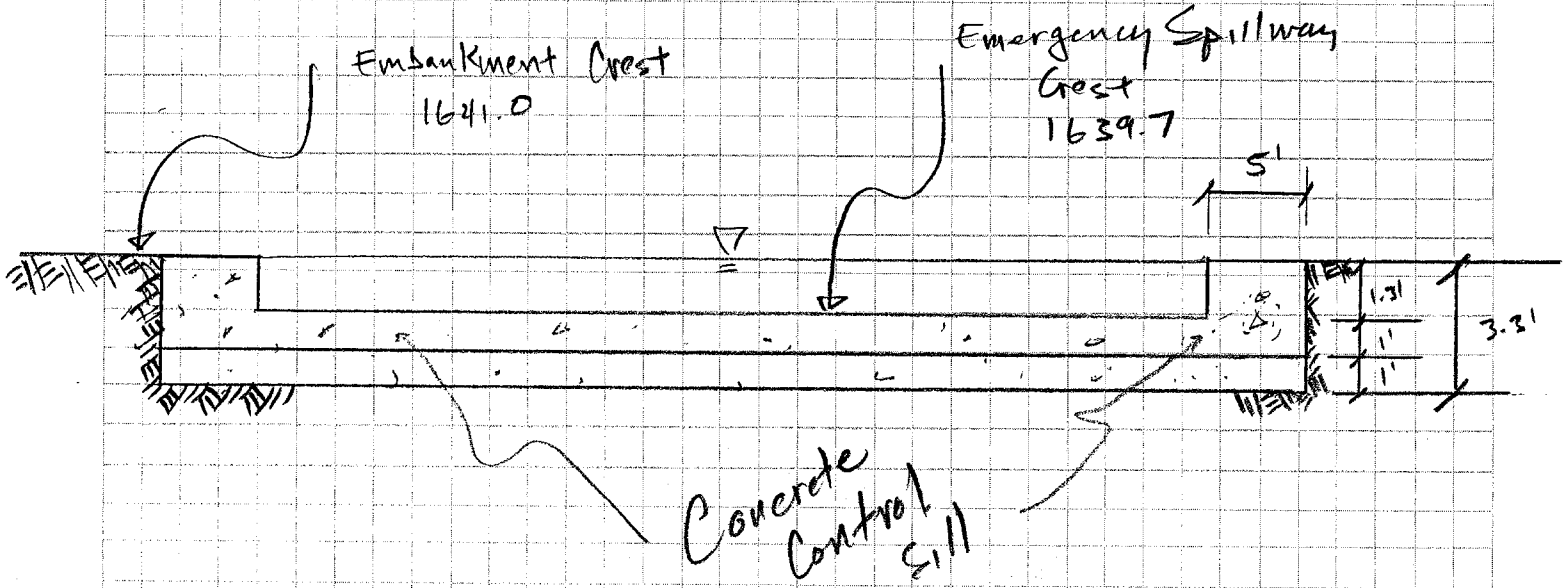

Kimley-Horn and Associates, Inc.

Job McDowell Subject Basin Design Sheet No. ____ of ____
Designed by DET Date 4/1/06 Checked by ____ Job No. 091131012 Date ____

BASIN EMERGENCY SPILLWAY

Erosion Protection Downstream Slope

Normal Mannings

$Q = 225$ cfs

$W = 50'$

$S = 12\%$

$n = 0.04$ Rough Rocks

$y = 0.55'$

$V = 8.4$ fps

City of Tuscon SLA curve Dumped riprap bank protection

$V = 8.4$ fps

$D_{50} = 0.75' = 9''$

Thickness $= 2 * D_{50} = 1.5'$

Gradation per ECAMC

Energy Dissipator

Length of Apron

Depth

Kimley-Horn and Associates, Inc.

Job McDowell Subject Basin Design Sheet No. ____ of ____
Job No. 091131012
Designed by DEJ Date 4/1/06 Checked by ____ Date ____

Emergency Spillway

DESIGN CREST with Gabion Mattress

T = 12 inche HEC-11 p-84/ Table 5

also T = D_{50} of dumped riprap = 9"

V = 8.5 fps

Design Mattress with apron (Type A)

Standard gabion size

T = 1'

W = 3'

Length = 6'

Opening mesh = 3.25" x 4.5"

Stone Size = D_{50}

Filter requirements per FCD Type II

Same ~~Fig~~ Sectional Detail

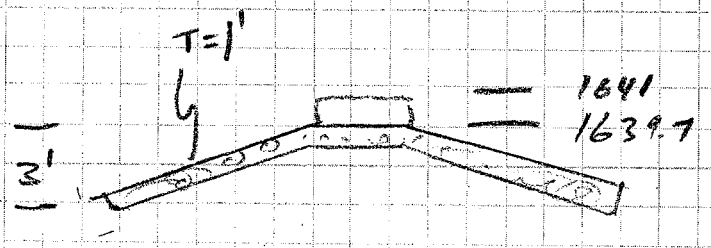

Kimley-Horn and Associates, Inc.

Job McDowell Subject Basin Emergency Spillway Sheet No. ____ of ____
Job No. 091131012
Designed by DEJ Date 4/7/06 Checked by ____ Date ____

BASIN EMERGENCY SPILLWAY SECTIONS

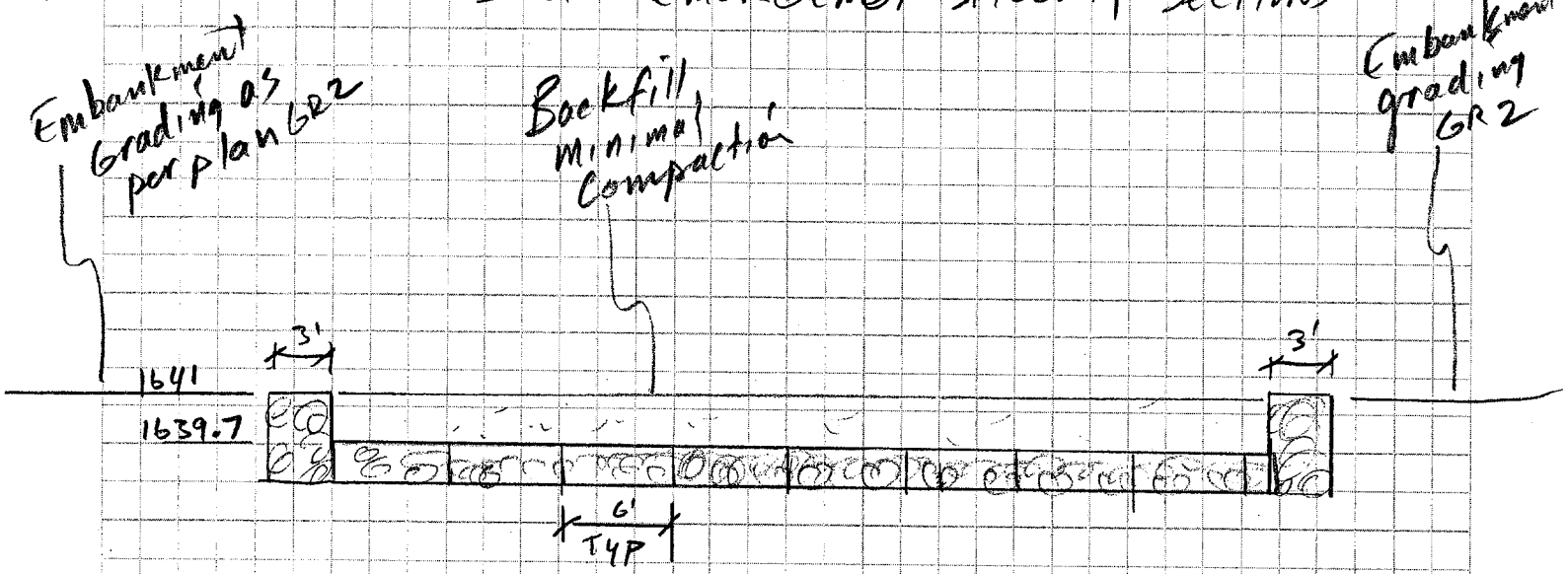

SECTION A-A

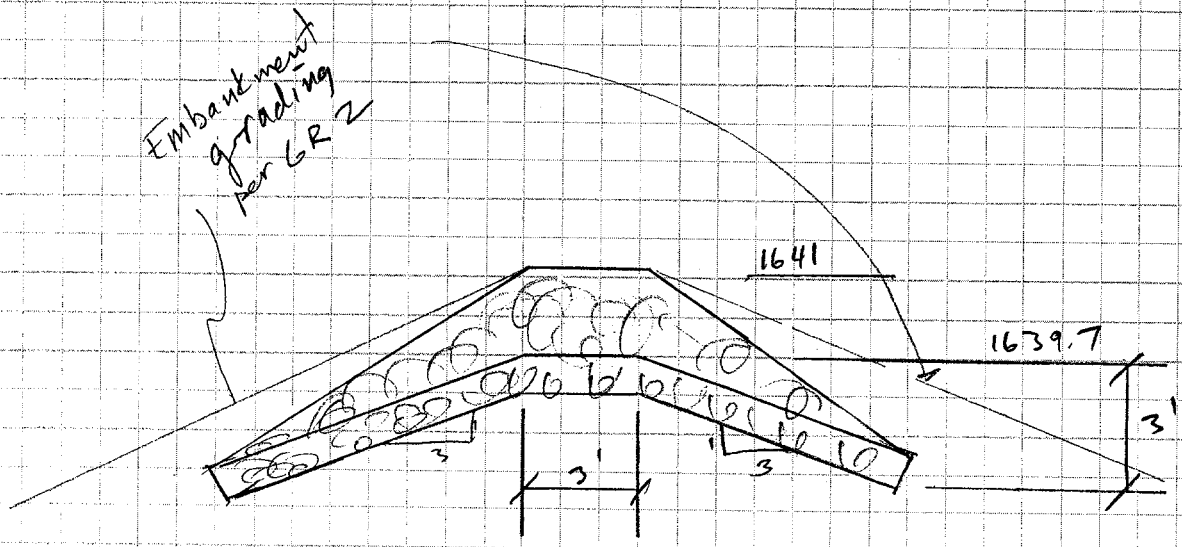

SECTION B-B

NOTE Install; gabion matress Emergency Spillway Control sill.

Minimal Compaction in control section to initiate breach during overflow events.

Basin Culvert Outlet

Basin Culvert Outlet

(McDOWELL / SOSSAMAN Detention Basin)

Design Basin Culvert outlet dissipater as an SAF Basin (REF: OPEN CHANNEL HYDRAULICS CHOW 1959 p 415-416) ✓

$Q = 304$ cfs ✓ (FLOW INTO BASIN)

$V = 17.7$ fps (H4-8 output. Empty basin)

$\phi = 42'' = 3.5'$

$S = 6.4\%$

$Fr = 4.1$

$y_1 = 2.0'$ = (H4-8 Outflow Depth. Empty basin)

Length of basin

(1) $$L_B = 4.5(y_2) \Big/ Fr^{0.76}$$ (page 415)

y_2 = depth in D/S Channel. We have a basin, so assume $y_2 = \phi_{pipe}$. This will be conservative, since as basin fills TW will dissipate energy.

$$L_B = 4.5(3.5) \Big/ 4.1^{0.76} = 5.4' \checkmark$$

Make it a minimum $L_B = 10'$ ✓

(2) H_1 = Chute block height

$H_1 = 0.75 \times H_1$ ✓

$H_1 = 1.5'$

USE 2' Tall Landscape Boulder as baffle teeth (12" buried in floor slab)

(3) D_F = Distance to Floor Blocks for U/s end of basin

$D_F = L_B/3$ ✓

$D_F = 10/3 = 3.3'$

$D_F = 3.5'$ ✓

(4) D_W = Distanc of Floor blocks away from wall

$D_W = 3y_1/8 = 0.75' = 9''$ ✓

(6) FB_W = Width of floor blocks = 40-55% of B_1

$B_1 = 22'$ per MAC Standard headwall. ✓

Kimley-Horn and Associates, Inc.

Job McDowell Road Subject Basin Culvert Outlet Sheet No. 3 of 7
Job No. 091131012
Designed by DEJ Date 9/20/06 Checked by CWS Date 9/26/06

(6)

Floor blocks must occupy 40% - 55% of stilling basin width ✓

5 blocks @ 2'/block = 8'

Basin width = 22'

$\frac{10}{20}$ = 45% OK ✓

Kimley-Horn and Associates, Inc.

Job McDowell Road SD Subject Basin Culvert Outlet Sheet No. 4 of 7
Job No. 091310
Designed by DEJ Date 9/25/06 Checked by RAC Date 9/29/06

(8) C = End sill height

$C = 0.07 * y_2$ (y_2 = ϕ pipe) ✓

$C = 0.07 \times 3.5 = 0.245' = 3''$ ✓

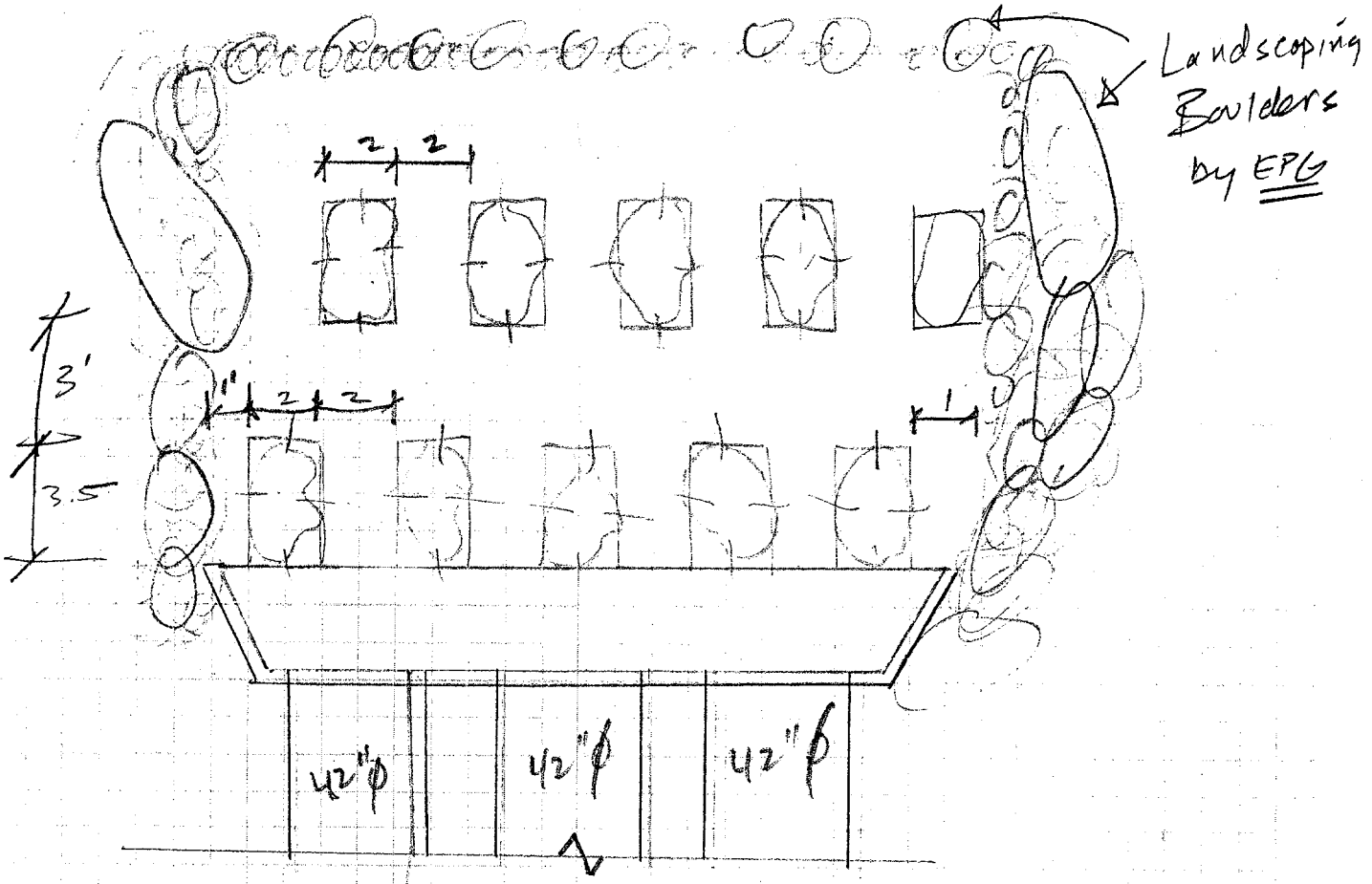

NTS

Kimley-Horn and Associates, Inc.

Job McDowell Road S.D. Subject Basin Culvert Outlet Sheet No. 5 of 7
Job No. 091131012
Designed by DEJ Date 9/23/06 Checked by RAE Date 9/26/06

(10) Wall height = $y_2 + z$ Again, this is a basin so assume $y_2 = \phi_{pipe}$ ✓

$y_2 = 3.5'$

$z = y_2/3 = 1.16$ ✓ (page 417)

Wall height = $3.5 + 1.16 = 4.66 = 4'-8''$ ✓

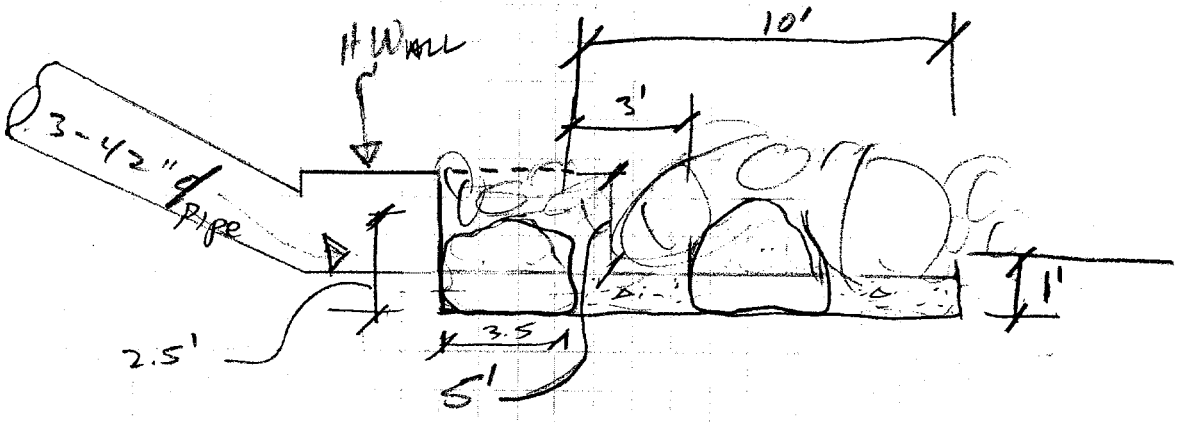

per MAG 501-3
(D + 1.5')

Concrete floor 1' thick. ✓

Place Landscape boulders (dissipating blocks) first

Determine if boulders need reinforcing or connection to Concrete slab.

Velocity of flow 17 fps

Area of impact block

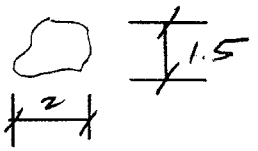

$F = 300 \frac{lb}{ft^2} * 2' \times 1.5' = 900 lb$

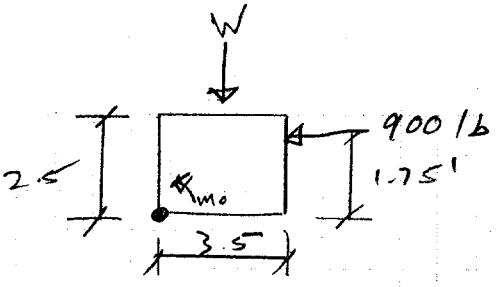

$M_o = 900 lb * 1.75' = 1.575 ft \cdot k$

$W = 2' \times 2.5' \times 3.5' * \left(130 \frac{lb}{ft^3}\right) = 2.275 Kips$

$M_R = 2.275 Kips * \left(\frac{3.5'}{2}\right) = 3.98 ft \cdot k$

$FS = \frac{3.98 ft \cdot k}{1.58 ft \cdot k} = 2.52$

FS = 2.5 No overturning w/o reinforcement

Sliding ok since rocks embedded 1'

entire structure ok from sliding

Kimley-Horn and Associates, Inc.

Job McDowell Road SD Subject Basin Culvert Outlet Sheet No. 7 of 7
Job No. 091131012
Designed by DET Date 9/23/06 Checked by RLMB Date 9/26/06

Basin Culvert Outlet Size

For Headwall

(Based on MAG 501-3 spacing)

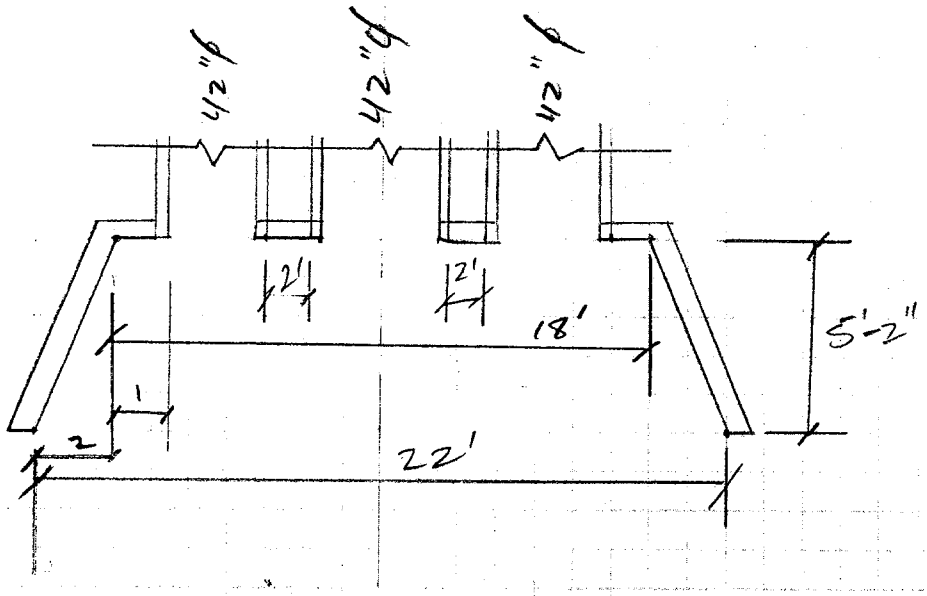

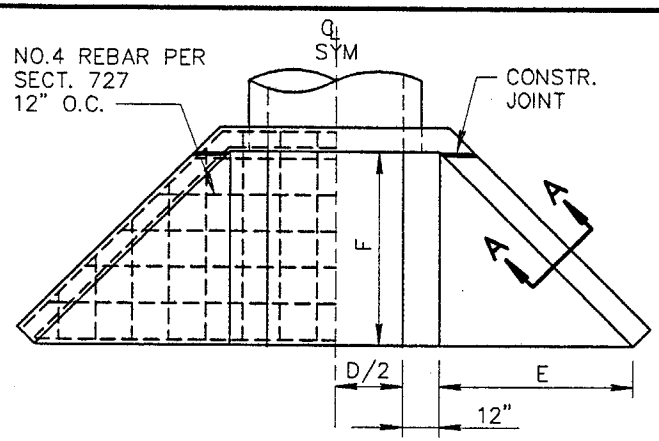

INLET HEADWALL

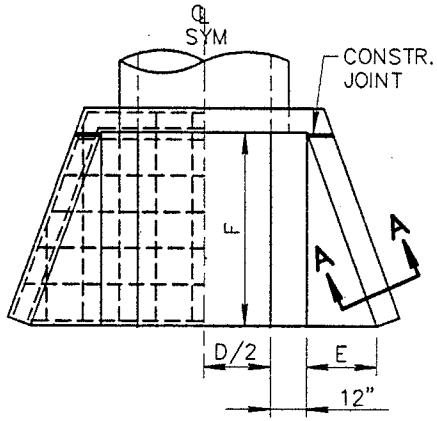

OUTLET HEADWALL

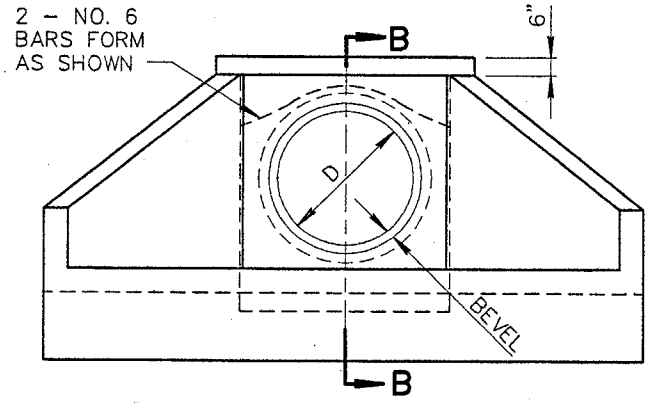

INLET HEADWALL FACE ELEVATION
OUTLET SIMILAR

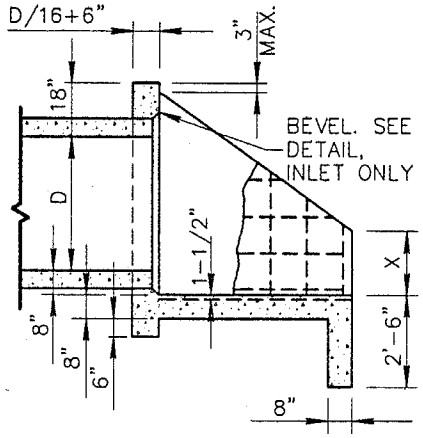

SECTION B-B

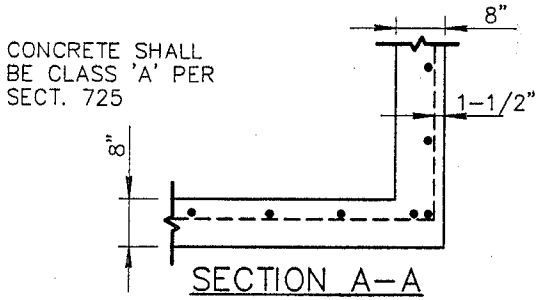

SECTION A-A

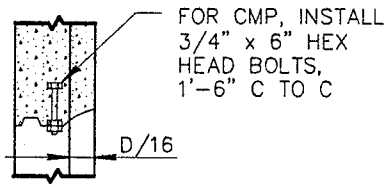

CMP BEVEL DETAIL

1:1 1/2 EMBANKMENT SLOPE				
D	TYPE *	DIMENSIONS		
		F	E	X
42"	1 (IN)	5'-2"	5'-2"	1'-9"
	2 (OUT)	5'-2"	1'-11"	1'-9"
48"	3 (IN)	5'-8"	5'-8"	1'-11"
	4 (OUT)	5'-8"	2'-1"	1'-11"
54"	5 (IN)	6'-2"	6'-2"	2'-1"
	6 (OUT)	6'-2"	2'-3"	2'-1"
60"	7 (IN)	6'-8"	6'-8"	2'-3"
	8 (OUT)	6'-8"	2'-5"	2'-3"
66"	9 (IN)	7'-2"	7'-2"	2'-5"
	10 (OUT)	7'-2"	2'-7"	2'-5"
72"	11 (IN)	7'-8"	7'-8"	2'-7"
	12 (OUT)	7'-8"	2'-9"	2'-7"
78"	13 (IN)	8'-2"	8'-2"	2'-9"
	14 (OUT)	8'-2"	3'-0"	2'-9"
84"	15 (IN)	8'-8"	8'-8"	2'-11"
	16 (OUT)	8'-8"	3'-2"	2'-11"

1:4 EMBANKMENT SLOPE				
D	TYPE *	DIMENSIONS		
		F	E	X
42"	17 (IN)	8'-8"	8'-8"	3'-0"
	18 (OUT)	8'-8"	3'-2"	3'-0"
48"	19 (IN)	8'-8"	8'-8"	3'-6"
	20 (OUT)	8'-8"	3'-2"	3'-6"
54"	21 (IN)	8'-8"	8'-8"	4'-0"
	22 (OUT)	8'-8"	3'-2"	4'-0"
60"	23 (IN)	9'-4"	9'-4"	4'-4"
	24 (OUT)	9'-4"	3'-5"	4'-4"
66"	25 (IN)	9'-8"	9'-8"	4'-9"
	26 (OUT)	9'-8"	3'-6"	4'-9"
72"	27 (IN)	9'-8"	9'-8"	5'-3"
	28 (OUT)	9'-8"	3'-6"	5'-3"
78"	29 (IN)	10'-0"	10'-0"	5'-8"
	30 (OUT)	10'-0"	3'-8"	5'-8"
84"	31 (IN)	10'-8"	10'-8"	6'-0"
	32 (OUT)	10'-8"	3'-11"	6'-0"

* (IN) REFERS TO INLET
(OUT) REFERS TO OUTLET

DETAIL NO.			REVISED	DETAIL NO.
501-3	MARICOPA ASSOCIATION of GOVERNMENTS — STANDARD DETAIL ENGLISH	HEADWALL 42" TO 84" PIPE		501-3

ing velocities, the sill is usually dentated to perform the additional function of diffusing the residual portion of the high-velocity jet that may reach the end of the basin.

Baffle piers are blocks placed in intermediate positions across the basin floor. Their function is to dissipate energy mostly by impact action. The baffle piers are very useful in small structures with low incoming velocities. They are unsuitable, however, where high velocities make cavitation possible. In certain circumstances, they must be designed to withstand impact from ice or floating debris.

There are many generalized designs of stilling basin that use a hydraulic jump as the means of energy dissipation.[1] Three typical designs will be described in the subsequent articles:

1. The SAF basin. This is recommended for use on small structures such as small spillways, outlet works, and small canal structures where $\mathbf{F}_1 = 1.7$ to 17. The reduction in basin length achieved through the use of appurtenances designed for the basin is about 80% (70 to 90%).

2. The USBR basin II. This is recommended for use on large structures such as large spillways, large canal structures, etc., for $\mathbf{F}_1 > 4.5$. The jump-and-basin length is reduced about 33% with the use of appurtenances.

3. The USBR basin IV. This is recommended for use with jumps of $\mathbf{F}_1 = 2.5$ to 4.5, which usually occur on canal structures and diversion dams. This design reduces excessive waves created in imperfect jumps.

It should be noted that these designs are only typical examples and that caution should be used in applying them to stilling basins under entirely different design conditions.

The principle of the stilling basin applies also to the design of a *canal drop* (or *canal fall*), which is a structure built to secure the lowering of the water surface of a canal and the safe destruction of the energy so liberated. The canal drop is sometimes designed with a contracted width like the Parshall flume. Such a drop is known as a *flumed drop*, which can economically be built together with a crossing bridge and used as a meter or a regulator as well [50,60–63].

15-12. The SAF Stilling Basin. This basin (Fig. 15-15; SAF denotes "Saint Anthony Falls") was developed at the St. Anthony Falls Hydraulic Laboratory, University of Minnesota, for use on small drainage structures such as those built by the U.S. Soil Conservation Service. The design rules summarized by the investigator Blaisdell [22,64] are as follows:

1. The length L_B of the stilling basin for Froude numbers between $\mathbf{F}_1 = 1.7$ and $\mathbf{F}_1 = 17$ is determined by $L_B = 4.5y_2/\mathbf{F}_1^{0.76}$.

[1] For more information see [9], [25], [34], [35], [43], and [49] to [58]. For designs developed by the U.S. Army Corps of Engineers, see [59].

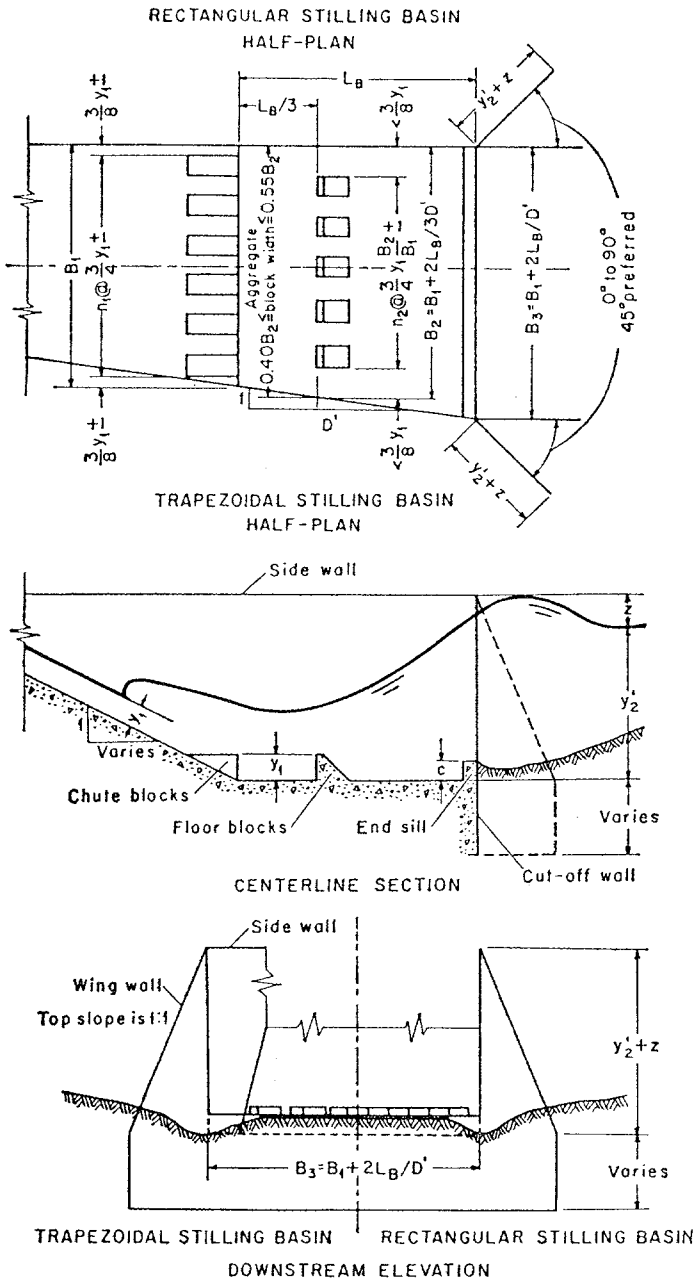

FIG. 15-15. Proportions of the SAF basin. (*U.S. Soil Conservation Service* [64].)

2. The height of the chute blocks and floor blocks is y_1, and the width and spacing are approximately $0.75y_1$.

3. The distance from the upstream end of the stilling basin to the floor blocks is $L_B/3$.

4. No floor block should be placed closer to the side wall than $3y_1/8$.

5. The floor blocks should be placed downstream from the openings between the chute blocks.

6. The floor blocks should occupy between 40 and 55% of the stilling-basin width.

7. The widths and spacings of the floor blocks for diverging stilling basins should be increased in proportion to the increase in stilling-basin width at the floor-block location.

8. The height of end sill is given by $c = 0.07y_2$, where y_2 is the theoretical sequent depth corresponding to y_1.

9. The depth of tailwater above the stilling-basin floor is given by $y_2' = (1.10 - \mathbf{F}_1^2/120)y_2$, for $\mathbf{F}_1 = 1.7$ to 5.5; by $y_2' = 0.85y_2$, for $\mathbf{F}_1 = 5.5$ to 11; and by $y_2' = (1.00 - \mathbf{F}_1^2/800)y_2$, for $\mathbf{F}_1 = 11$ to 17.

10. The height of the side wall above the maximum tailwater depth to be expected during the life of the structure is given by $z = y_2/3$.

11. Wing walls should be equal in height to the stilling-basin side walls. The top of the wing wall should have a slope of 1 on 1.

12. The wing wall should be placed at an angle of 45° to the outlet center line.

13. The stilling-basin side walls may be parallel (as in a rectangular stilling basin) or they may diverge as an extension of the transition side walls (as in a trapezoidal stilling basin).

14. A cutoff wall of nominal depth should be used at the end of the stilling basin.

15. The effect of entrained air should be neglected in the design of the stilling basin.

15-13. USBR Stilling Basin II. From intensive studies of many existing structures and laboratory investigations, various types of generalized design of stilling basin have been developed by the U.S. Bureau of Reclamation [34,35]. USBR basin I is the basin created by a jump occurring on a flat floor with no appurtenances. This can be designed easily by following the principles described in the early articles of this chapter. However, such a basin is usually not very practical because of its expensive length and its lack of control. USBR basin III is designed for a purpose similar to that of the SAF basin, but it has a higher factor of safety, which is necessary for Bureau use. The performance of this basin indicates that the jump-and-basin length can be reduced about 60% with the appurtenances, as compared with 80% for the SAF basin. Therefore, the SAF basin is shorter and more economical but, in conse-

Splitter Structure

Kimley-Horn and Associates, Inc.

Job McDowell Road Basin Subject Splitter Structure Sheet No. 1 of 6 Job No. 091131012

Designed by DET Date 9/20/06 Checked by MAE Date 9/28/06

DESIGN WEIR LENGTH OF WEIR IN SPLITTER STRUCTURE

MAXIMUM WEIR FLOW + FLOW INTO BASIN (CULVERT)

$Q = 304$ cfs { FROM PREVIOUS ANALYSIS AND BASIN REQUIREMENTS } ✓

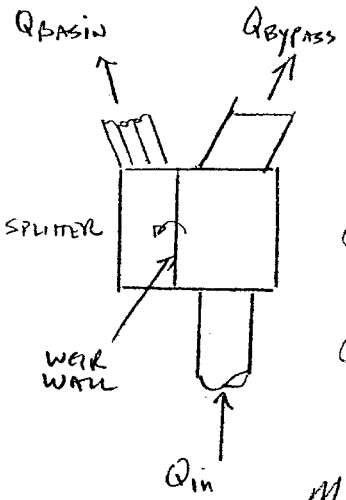

7'x4' RCBC By pass was already designed

$Q_{IN} = 704$ cfs ✓

$Q_{BYPASS} = 400$ cfs ✓

$Q_{BASIN\ CULVERTS} = 304$ cfs ✓

MAX HW FOR By pass FLOW = 1646.4 Ft per design Report ✓

Crest ELEVATION of weir wall = 1643.5 Ft ✓

WIDTH OF WEIR WALL = 1 Ft ✓

TOTAL HEAD ON WEIR = 1646.4 − 1643.5 = 2.9' ✓

Kimley-Horn and Associates, Inc.

Job McDowell Road Subject Splitter Structure Sheet No. 2 of 6
Job No. 091151012
Designed by DEJ Date 9/22/06 Checked by RAE Date 9/28/00

$Q = CLH^{\frac{3}{2}}$

$C = 3.32$ ✓ Weir Breadth = 1' (Brater & King 5-40) SEE ATTACHED ✓

$H = 2.9$ = Total Head = flow depth + velocity hea

$L = Q/CH^{\frac{3}{2}} = \frac{300}{3.32(2.9)^{1.5}}$ ✓

$L = 18.54'$

$\boxed{L = 18.5'}$ WEIR WALL LENGTH ✓

Now Determine Basin Culvert pipe size to convey flow to basin. The weir will become submerged if the D/S flow depth is greater than the crest of the weir.
So max HW for basin culvert = 1643.5

PER #4-8 $Q = 304$ USE 3-42" ϕ RCP
Max HW = 1643.4 Max HW = 1643.3'
TW = 1639.7
$V_o = 10.5$ ft/s
SEE Output ATTACHED

width of basin culvert chamber

Pipes = 3 - 42" pipes

Opening is skewed $\theta = 30°$

opening = 3.5' / Cos 30°

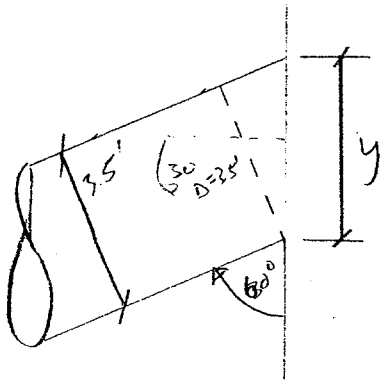

$y = \frac{3.5}{\cos 30°} = 4.0'$ ✓

total pipe opening = 3-pipes @ 4'/pipe = 12'

intermediate space O.D. - O.D. = 1' x 2 = 2

pipe thickness = 6 walls x 4.5"/wall = 27" = 2.25'

Space for rebar spacing = 1' each side of pipes x 2 sides = 2'

Total = 18.25 = 18.5 + 1' outside wall = 19.5

total Structure width = 34.5 Ft

Structure LENGTH = WEIR LENGTH + 2 wall width =

18.5' + 2' = 20.5' ✓

Kimley-Horn and Associates, Inc.

Job McDowell Road Subject Splitter Structure Sheet No. 4 of 6
Job No. 091139012
Designed by DEJ Date 10/22/06 Checked by RME Date 9/28/06

Splitter Structure Layout

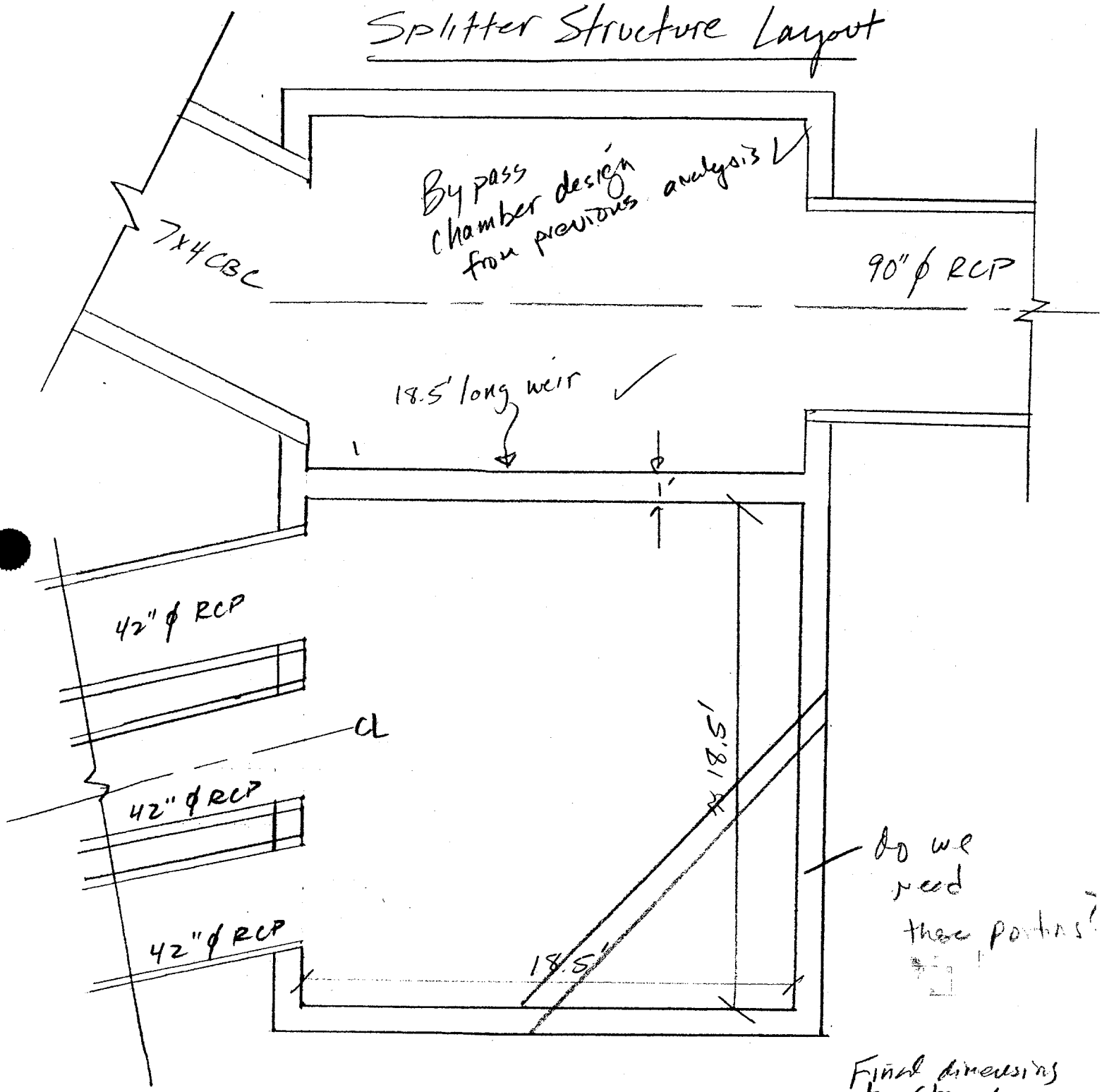

Final dimensions by Structures design

42" ϕ RCP wall thickness = 4.5"

Kimley-Horn and Associates, Inc.

Job McDowell Rd Subject Splitter Structure Sheet No. 5 of 6

Designed by DEJ Date 10/22/06 Checked by RAE Date 11/21/06 Job No. 091131012

Splitter Structure Section

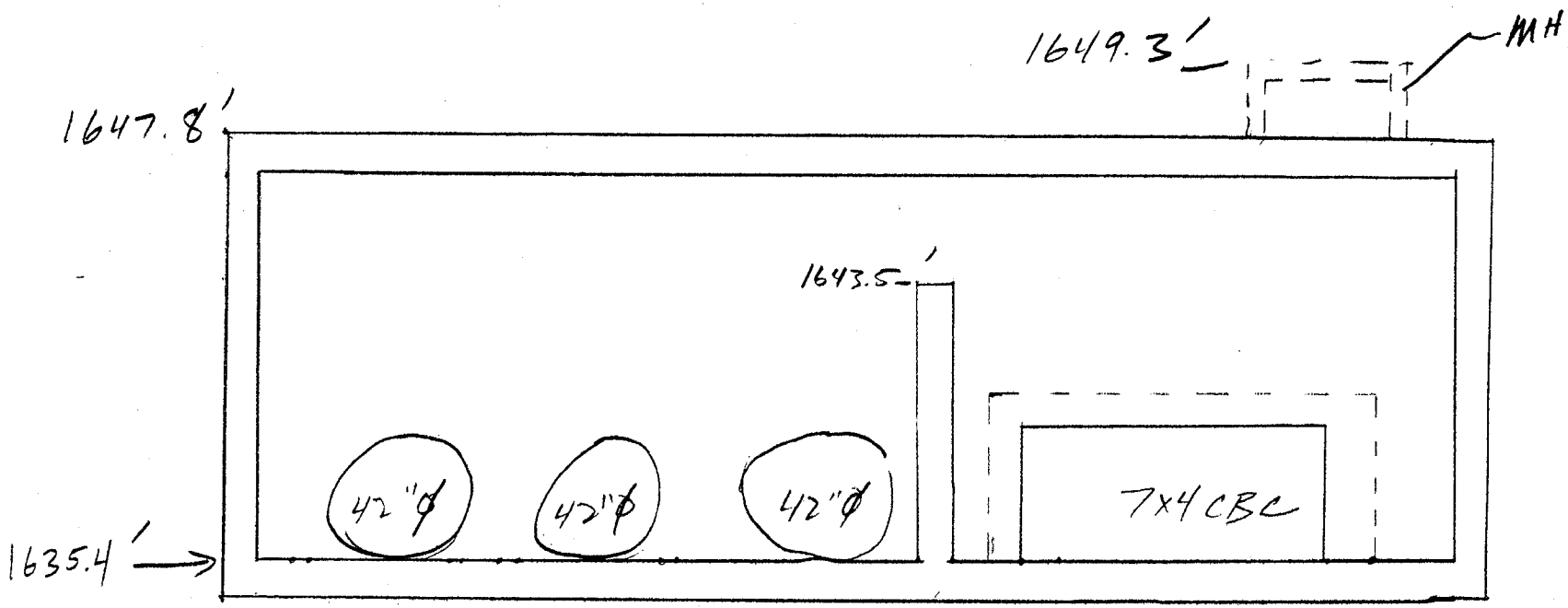

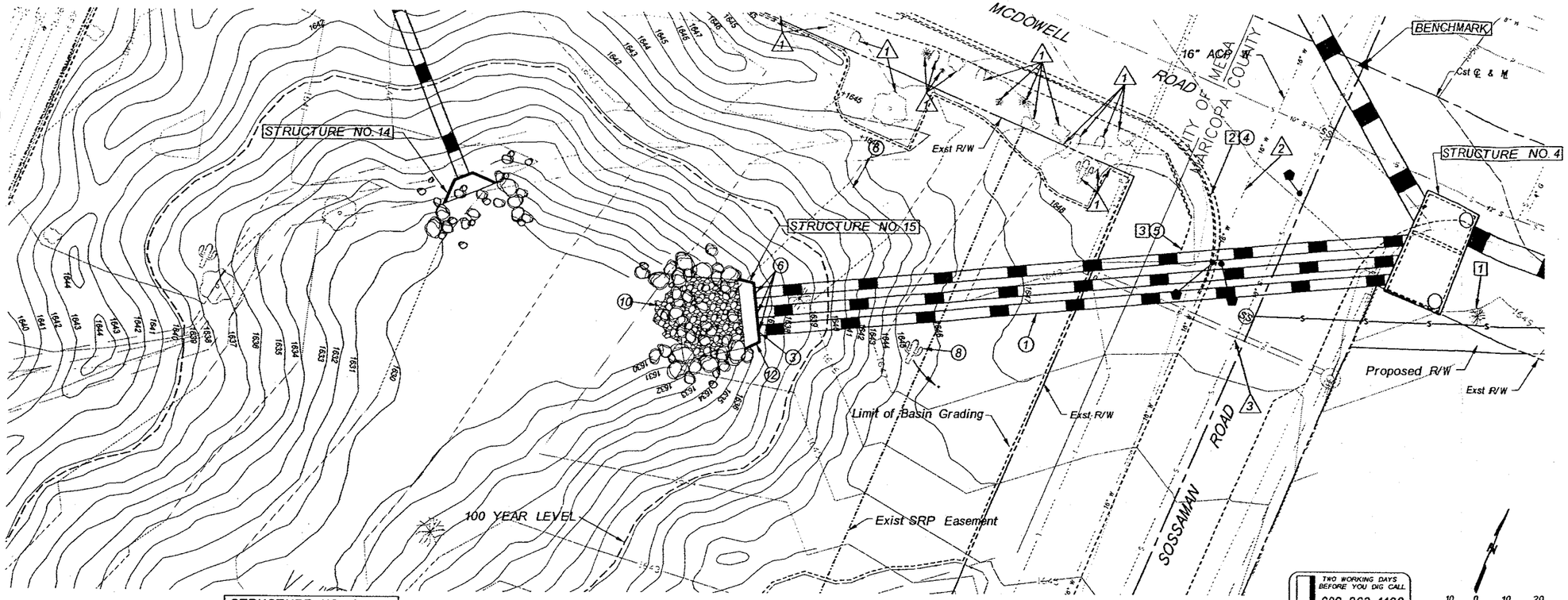

STRUCTURE NO. 16 SHOWN ON DWG NO.GR2

FOR BASIN GRADING PLAN SEE SHEETS 58 THROUGH 60

SEE DWG LP-1 FOR LANDSCAPE BOULDERS

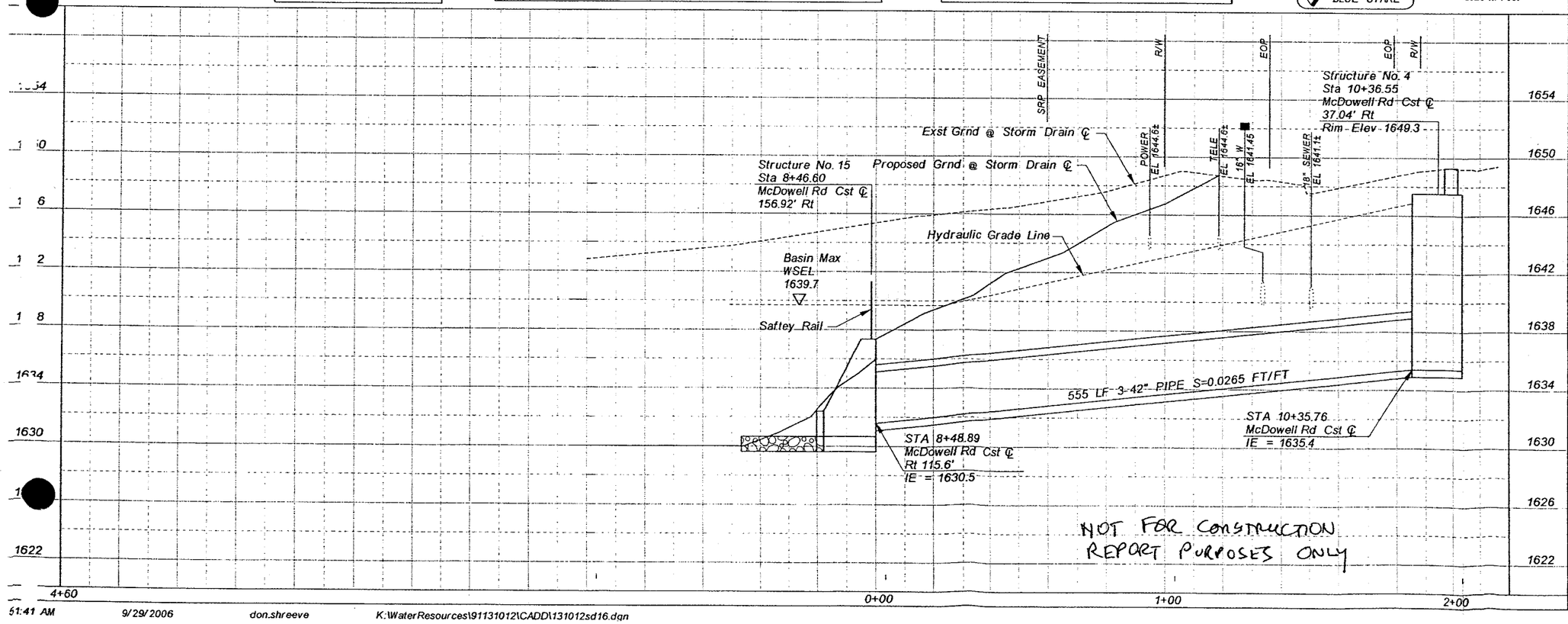

NOT FOR CONSTRUCTION
REPORT PURPOSES ONLY

☐ REMOVE ☐

1. REMOVE EXISTING VEGETATION (NPI)
2. REMOVE EXISTING CURB AND GUTTER 18 LF
3. REMOVE EXISTING SIDEWALK 10 SY

○ CONSTRUCT ○

INSTALL NEW STORM DRAIN PIPE

NO.	STATION TO STATION	DIAMETER INCHES	LENGTH FEET
1	8+46.62 - 10+36.0 CLASS V	3-42	555

INSTALL NEW RCBC

NO.	STATION TO STATION	WIDTH HEIGHT	LENGTH FEET
2	NOT USED		

3. CONSTRUCT CONCRETE OUTLET HEADWALL W/ APRON PER MAG STD DET 501-3 — 1 EA
4. CONSTRUCT NEW CURB & GUTTER PER MAG STD DET 220, TYPE A — 18 LF
5. CONSTRUCT NEW SIDEWALK PER MAG STD DET 230 — 10 SY
6. INSTALL 42" STORM DRAIN ACCESS BARRIER PER COP DET P-1563 — 3 EA
7. NOT USED
8. SALVAGE AND RELOCATE SAGUARO — 15 LF
9. NOT USED
10. CONSTRUCT RIP RAP EROSION BLANKET TYPE I, SEE DWG NO. DT1 — 1 LS
11. NOT USED
12. INSTALL SAFTEY RAIL PER MAG STD DET 145 — 22 LF

△1 PROTECT IN PLACE VEGETATION (NPI)

△2 PROTECT IN PLACE (16" ACP W) (NPI)

△3 PROTECT IN PLACE (18" SEWER) (NPI)

PAVEMENT REMOVAL AND REPLACEMENT SEE SHEETS RD1-RD5

⬟ INDICATES POTHOLE LOCATION

■ INDICATES POTHOLE ELEVATION

NO	REVISION	BY	DATE
3			
2			
1			

FLOOD CONTROL DISTRICT OF MARICOPA COUNTY
ENGINEERING DIVISION

MCDOWELL ROAD BASIN AND STORM DRAIN PROJECT
PCN 420.03.31

24767 ROBERT A. EICHINGER ARIZONA U.S.A.

	BY	DATE
DESIGNED	DEJ	10/04/06
DRAWN	DKS	10/04/06
CHECKED	RAE	10/04/06

Kimley-Horn and Associates, Inc.

DRAWING NO.	PLAN AND PROFILE SHEET STA 4+00 TO STA 7+00	SHEET OF
SD16		28 73

JRRENT DATE: 09-26-2006
CURRENT TIME: 16:25:17

FILE DATE: 9/26/2006
FILE NAME: McDBasin

FHWA CULVERT ANALYSIS
HY-8, VERSION 6.1

CULV NO.	SITE DATA: INLET ELEV. (ft)	OUTLET ELEV. (ft)	CULVERT LENGTH (ft)	CULVERT SHAPE, MATERIAL, INLET: BARRELS SHAPE MATERIAL	SPAN (ft)	RISE (ft)	MANNING n	INLET TYPE
1	1635.40	1630.50	185.06	3 RCP	3.50	3.50	.012	CONVENTIONAL
2								
3								
4								
5								
6								

SUMMARY OF CULVERT FLOWS (cfs) FILE: McDBasin DATE: 9/26/2006

ELEV (ft)	TOTAL	1	2	3	4	5	6	ROADWAY	ITR
1639.70	0.0	0.0	0.0	0.0	0.0	0.0	0.0	0.00	1
1639.73	30.4	30.4	0.0	0.0	0.0	0.0	0.0	0.00	1
1639.84	60.8	60.8	0.0	0.0	0.0	0.0	0.0	0.00	1
1640.03	91.2	91.2	0.0	0.0	0.0	0.0	0.0	0.00	1
1640.28	121.6	121.6	0.0	0.0	0.0	0.0	0.0	0.00	1
1640.61	152.0	152.0	0.0	0.0	0.0	0.0	0.0	0.00	1
1641.01	182.4	182.4	0.0	0.0	0.0	0.0	0.0	0.00	1
1641.28	200.0	200.0	0.0	0.0	0.0	0.0	0.0	0.00	1
1642.04	243.2	243.2	0.0	0.0	0.0	0.0	0.0	0.00	1
1642.66	273.6	273.6	0.0	0.0	0.0	0.0	0.0	0.00	1
1643.35	304.0	304.0	0.0	0.0	0.0	0.0	0.0	0.00	1
1646.50	414.6	414.6	0.0	0.0	0.0	0.0	0.0	OVERTOPPING	

SUMMARY OF ITERATIVE SOLUTION ERRORS FILE: McDBasin DATE: 9/26/2006

HEAD ELEV (ft)	HEAD ERROR (ft)	TOTAL FLOW (cfs)	FLOW ERROR (cfs)	% FLOW ERROR
1639.70	0.000	0.00	0.00	0.00
1639.73	0.000	30.40	0.00	0.00
1639.84	0.000	60.80	0.00	0.00
1640.03	0.000	91.20	0.00	0.00
1640.28	0.000	121.60	0.00	0.00
1640.61	0.000	152.00	0.00	0.00
1641.01	0.000	182.40	0.00	0.00
1641.28	0.000	200.00	0.00	0.00
1642.04	0.000	243.20	0.00	0.00
1642.66	0.000	273.60	0.00	0.00
1643.35	0.000	304.00	0.00	0.00

<1> TOLERANCE (ft) = 0.010 <2> TOLERANCE (%) = 1.000

Detention basin full!

URRENT DATE: 09-26-2006
CURRENT TIME: 16:25:17

FILE DATE: 9/26/2006
FILE NAME: McDBasin

PERFORMANCE CURVE FOR CULVERT 1 - 3(3.50 (ft) BY 3.50 (ft)) RCP

DIS-CHARGE FLOW (cfs)	HEAD-WATER ELEV. (ft)	INLET CONTROL DEPTH (ft)	OUTLET CONTROL DEPTH (ft)	FLOW TYPE <F4>	NORMAL DEPTH (ft)	CRIT. DEPTH (ft)	OUTLET DEPTH (ft)	TW DEPTH (ft)	OUTLET VEL. (fps)	TW VEL. (fps)
0.00	1639.70	0.00	4.30	0-NF	0.00	0.00	0.00	9.20	0.00	0.00
30.40	1639.73	1.22	4.33	4-FFt	0.54	0.95	3.50	9.20	1.05	0.00
60.80	1639.84	1.87	4.44	4-FFt	0.79	1.38	3.50	9.20	2.11	0.00
91.20	1640.02	2.37	4.62	4-FFt	0.97	1.70	3.50	9.20	3.16	0.00
121.60	1640.28	2.80	4.88	4-FFt	1.13	1.97	3.50	9.20	4.21	0.00
152.00	1640.61	3.20	5.21	4-FFt	1.27	2.22	3.50	9.20	5.27	0.00
182.40	1641.01	3.62	5.61	4-FFt	1.41	2.44	3.50	9.20	6.32	0.00
200.00	1641.28	3.87	5.88	4-FFt	1.48	2.55	3.50	9.20	6.93	0.00
243.20	1642.04	4.57	6.64	4-FFt	1.66	2.81	3.50	9.20	8.43	0.00
273.60	1642.66	5.13	7.26	4-FFt	1.78	2.94	3.50	9.20	9.48	0.00
304.00	1643.35	5.76	7.95	4-FFt	1.89	3.07	3.50	9.20	10.53	0.00

El. inlet face invert 1635.40 ft El. outlet invert 1630.50 ft
El. inlet throat invert 0.00 ft El. inlet crest 1635.40 ft

**** SITE DATA ***** CULVERT INVERT **********

INLET STATION	0.00 ft
INLET ELEVATION	1635.40 ft
OUTLET STATION	185.00 ft
OUTLET ELEVATION	1630.50 ft
NUMBER OF BARRELS	3
SLOPE (V/H)	0.0265
CULVERT LENGTH ALONG SLOPE	185.06 ft

* CULVERT DATA SUMMARY **********

BARREL SHAPE	CIRCULAR
BARREL DIAMETER	3.50 ft
BARREL MATERIAL	CONCRETE
BARREL MANNING'S n	0.012
INLET TYPE	CONVENTIONAL
INLET EDGE AND WALL	GROOVED END IN HEADWALL
INLET DEPRESSION	NONE

CURRENT DATE: 09-26-2006
CURRENT TIME: 16:25:17

FILE DATE: 9/26/2006
FILE NAME: McDBasin

TAILWATER

CONSTANT WATER SURFACE ELEVATION
1639.70

ROADWAY OVERTOPPING DATA

WEIR COEFFICIENT	2.70	
EMBANKMENT TOP WIDTH	100.00	ft
CREST LENGTH	50.00	ft
OVERTOPPING CREST ELEVATION	1646.50	ft

JRRENT DATE: 09-27-2006
CURRENT TIME: 10:57:49

FILE DATE: 9/27/2006
FILE NAME: McDBasin

FHWA CULVERT ANALYSIS
HY-8, VERSION 6.1

CULV NO.	SITE DATA: INLET ELEV. (ft)	OUTLET ELEV. (ft)	CULVERT LENGTH (ft)	CULVERT SHAPE, MATERIAL, INLET: BARRELS SHAPE MATERIAL	SPAN (ft)	RISE (ft)	MANNING n	INLET TYPE
1	1635.40	1630.50	185.06	3 RCP	3.50	3.50	.012	CONVENTIONAL
2								
3								
4								
5								
6								

SUMMARY OF CULVERT FLOWS (cfs) FILE: McDBasin DATE: 9/27/2006

ELEV (ft)	TOTAL	1	2	3	4	5	6	ROADWAY	ITR
1635.40	0.0	0.0	0.0	0.0	0.0	0.0	0.0	0.00	1
1636.62	30.4	30.4	0.0	0.0	0.0	0.0	0.0	0.00	1
1637.27	60.8	60.8	0.0	0.0	0.0	0.0	0.0	0.00	1
1637.77	91.2	91.2	0.0	0.0	0.0	0.0	0.0	0.00	1
1638.20	121.6	121.6	0.0	0.0	0.0	0.0	0.0	0.00	1
1638.60	152.0	152.0	0.0	0.0	0.0	0.0	0.0	0.00	1
1639.02	182.4	182.4	0.0	0.0	0.0	0.0	0.0	0.00	1
1639.27	200.0	200.0	0.0	0.0	0.0	0.0	0.0	0.00	1
1639.97	243.2	243.2	0.0	0.0	0.0	0.0	0.0	0.00	1
1640.53	273.6	273.6	0.0	0.0	0.0	0.0	0.0	0.00	1
1641.16	304.0	304.0	0.0	0.0	0.0	0.0	0.0	0.00	1
1646.50	498.2	498.2	0.0	0.0	0.0	0.0	0.0	OVERTOPPING	

SUMMARY OF ITERATIVE SOLUTION ERRORS FILE: McDBasin DATE: 9/27/2006

HEAD ELEV (ft)	HEAD ERROR (ft)	TOTAL FLOW (cfs)	FLOW ERROR (cfs)	% FLOW ERROR
1635.40	0.000	0.00	0.00	0.00
1636.62	0.000	30.40	0.00	0.00
1637.27	0.000	60.80	0.00	0.00
1637.77	0.000	91.20	0.00	0.00
1638.20	0.000	121.60	0.00	0.00
1638.60	0.000	152.00	0.00	0.00
1639.02	0.000	182.40	0.00	0.00
1639.27	0.000	200.00	0.00	0.00
1639.97	0.000	243.20	0.00	0.00
1640.53	0.000	273.60	0.00	0.00
1641.16	0.000	304.00	0.00	0.00

<1> TOLERANCE (ft) = 0.010 <2> TOLERANCE (%) = 1.000

Detention Basin Empty ✓

URRENT DATE: 09-27-2006
CURRENT TIME: 10:57:49

FILE DATE: 9/27/2006
FILE NAME: McDBasin

PERFORMANCE CURVE FOR CULVERT 1 - 3(3.50 (ft) BY 3.50 (ft)) RCP

DIS-HARGE FLOW (cfs)	HEAD-WATER ELEV. (ft)	INLET CONTROL DEPTH (ft)	OUTLET CONTROL DEPTH (ft)	FLOW TYPE <F4>	NORMAL DEPTH (ft)	CRIT. DEPTH (ft)	OUTLET DEPTH (ft)	TW DEPTH (ft)	OUTLET VEL. (fps)	TW VEL. (fps)
0.00	1635.40	0.00	0.00	0-NF	0.00	0.00	0.00	0.50	0.00	0.00
30.40	1636.62	1.22	1.22	1-S2n	0.54	0.95	0.45	0.50	13.48	0.00
60.80	1637.27	1.87	1.87	1-S2n	0.79	1.38	0.80	0.50	12.08	0.00
91.20	1637.77	2.37	2.37	1-S2n	0.97	1.70	0.90	0.50	15.41	0.00
121.60	1638.20	2.80	2.80	1-S2n	1.13	1.97	1.07	0.50	16.22	0.00
152.00	1638.60	3.20	3.20	1-S2n	1.27	2.22	1.32	0.50	15.26	0.00
182.40	1639.02	3.62	3.62	5-S2n	1.41	2.44	1.47	0.50	15.81	0.00
200.00	1639.27	3.87	3.87	5-S2n	1.48	2.55	1.55	0.50	16.19	0.00
243.20	1639.97	4.57	4.57	5-S2n	1.66	2.81	1.75	0.50	16.87	0.00
273.60	1640.53	5.13	5.13	5-S2n	1.78	2.94	1.89	0.50	17.24	0.00
304.00	1641.16	5.76	5.76	5-S2n	1.89	3.07	2.02	0.50	17.66	0.00

El. inlet face invert 1635.40 ft El. outlet invert 1630.50 ft
El. inlet throat invert 0.00 ft El. inlet crest 1635.40 ft

**** SITE DATA ***** CULVERT INVERT **********

INLET STATION	0.00 ft
INLET ELEVATION	1635.40 ft
OUTLET STATION	185.00 ft
OUTLET ELEVATION	1630.50 ft
NUMBER OF BARRELS	3
SLOPE (V/H)	0.0265
CULVERT LENGTH ALONG SLOPE	185.06 ft

* CULVERT DATA SUMMARY **********

BARREL SHAPE	CIRCULAR
BARREL DIAMETER	3.50 ft
BARREL MATERIAL	CONCRETE
BARREL MANNING'S n	0.012
INLET TYPE	CONVENTIONAL
INLET EDGE AND WALL	GROOVED END IN HEADWALL
INLET DEPRESSION	NONE

JRRENT DATE: 09-27-2006
CURRENT TIME: 10:57:49

FILE DATE: 9/27/2006
FILE NAME: McDBasin

TAILWATER

CONSTANT WATER SURFACE ELEVATION
1631.00

Basin Empty ✓

ROADWAY OVERTOPPING DATA

WEIR COEFFICIENT	2.70
EMBANKMENT TOP WIDTH	100.00 ft
CREST LENGTH	50.00 ft
OVERTOPPING CREST ELEVATION	1646.50 ft

Label	US Node	DS Node	Length (ft)	Section Size	Average Velocity (ft/s)	er h hs
Basin Culve	Splitter Stru	Structure N	185.00	42 inch	10.46	1.3

For KHA reference

Basin Culvert Designer

Using HP-8

Profile: Profile - 1

Scenario: Base

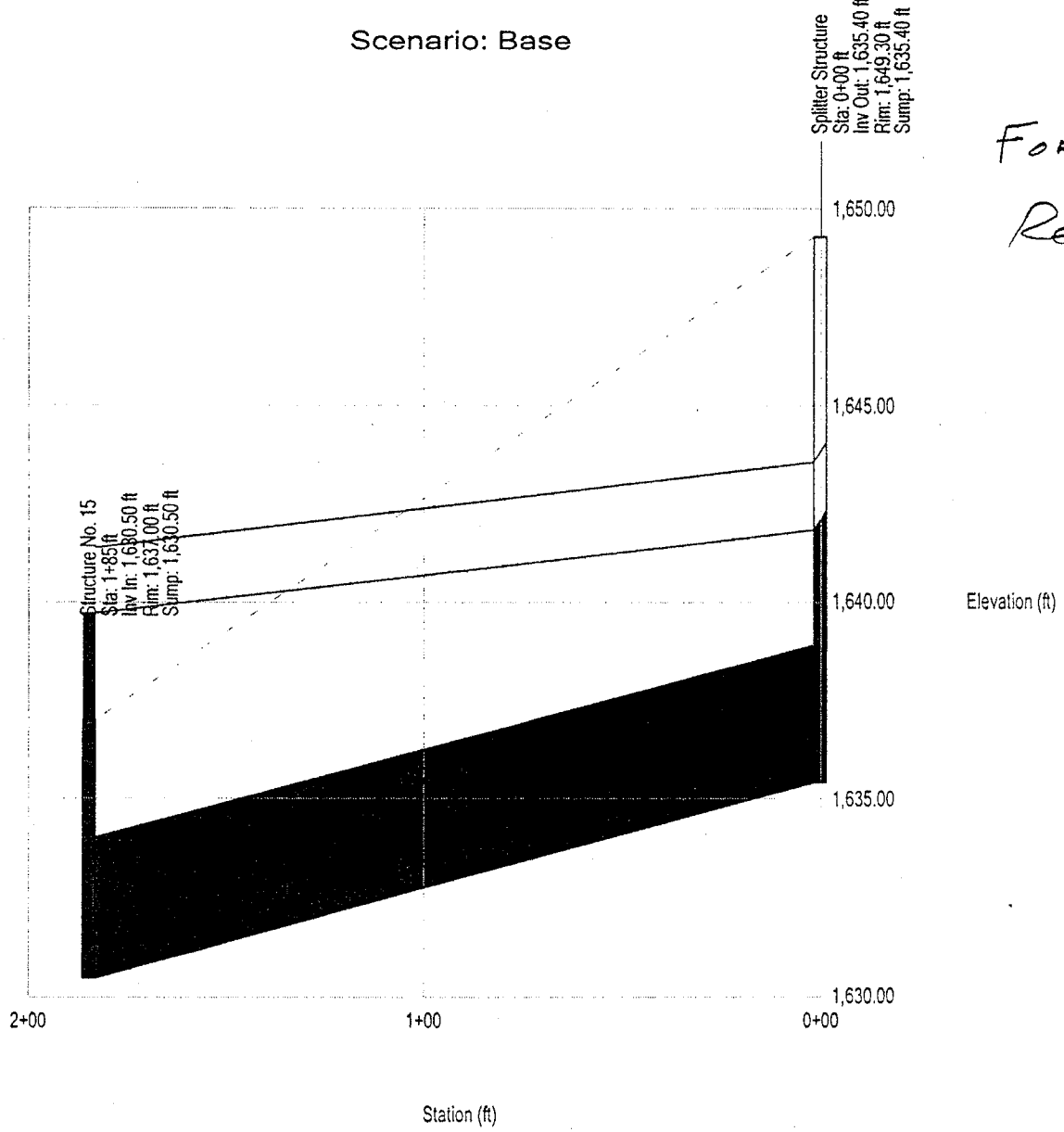

For KHA References

© Bentley Systems, Inc. Haestad Methods Solution Center Watertown, CT 06795 USA +1-203-755-1666

Kimley-Horn
and Associates, Inc.

ITEM No.	ITEM DESCRIPTION	UNIT	QUANTITY	UNIT PRICE	AMOUNT
1	Erosion Blanket Structure No. 15 (DT 1)	LS	1	$ 4,500.00	$ 4,500.00
2	Structure No. 4-Splitter Structure, Detail ST 5	EA	1	$ 70,000.00	$ 70,000.00
3	Structure No. 15-Headwall Triple 42-in Pipe, w/formliner and color, MAG Std Dtl 501-3	EA	1	$ 18,000.00	$ 18,000.00
4	42 inch Class V R.G.R.C.P.	LF	555	$ 220.00	$ 122,100.00
5	Storm Drain Shaft, 5-ft Diameter, MAG Std Dtl 420-2	EA	2	$ 1,500.00	$ 3,000.00
	Construction Cost Subtotal (Revisions)				$ 217,600.00

Brater & King Sixth Edition

Table 5-3. Values of C in the Formula $Q = CLH^{3/2}$ for Broad-crested Weirs

Measured head in feet, H	Breadth of crest of weir in feet										
	0.50	0.75	1.00	1.50	2.00	2.50	3.00	4.00	5.00	10.00	15.00
0.2	2.80	2.75	2.69	2.62	2.54	2.48	2.44	2.38	2.34	2.49	2.68
0.4	2.92	2.80	2.72	2.64	2.61	2.60	2.58	2.54	2.50	2.56	2.70
0.6	3.08	2.89	2.75	2.64	2.61	2.60	2.68	2.69	2.70	2.70	2.70
0.8	3.30	3.04	2.85	2.68	2.60	2.60	2.67	2.68	2.68	2.69	2.64
1.0	3.32	3.14	2.98	2.75	2.66	2.64	2.65	2.67	2.68	2.68	2.63
1.2	3.32	3.20	3.08	2.86	2.70	2.65	2.64	2.67	2.66	2.69	2.64
1.4	3.32	3.26	3.20	2.92	2.77	2.68	2.64	2.65	2.65	2.67	2.64
1.6	3.32	3.29	3.28	3.07	2.89	2.75	2.68	2.66	2.65	2.64	2.63
1.8	3.32	3.32	3.31	3.07	2.88	2.74	2.68	2.66	2.65	2.64	2.63
2.0	3.32	3.31	3.30	3.03	2.85	2.76	2.72	2.68	2.65	2.64	2.63
2.5	3.32	3.32	3.31	3.28	3.07	2.89	2.81	2.72	2.67	2.64	2.63
3.0	3.32	3.32	3.32	3.32	3.20	3.05	2.92	2.73	2.66	2.64	2.63
3.5	3.32	3.32	3.32	3.32	3.32	3.19	2.97	2.76	2.68	2.64	2.63
4.0	3.32	3.32	3.32	3.32	3.32	3.32	3.07	2.79	2.70	2.64	2.63
4.5	3.32	3.32	3.32	3.32	3.32	3.32	3.32	2.88	2.74	2.64	2.63
5.0	3.32	3.32	3.32	3.32	3.32	3.32	3.32	3.07	2.79	2.64	2.63
5.5	3.32	3.32	3.32	3.32	3.32	3.32	3.32	3.32	2.88	2.64	2.63

Table 5-4. Values of C in the Formula $Q = CLH^{3/2}$ for Models of Broad-crested Weirs with Rounded Upstream Corner

Name of experimenter	Radius of curve in feet	Breadth of weir in feet, B	Height of weir in feet, P	Head in feet, H									
				0.4	0.6	0.8	1.0	1.5	2.0	2.5	3.0	4.0	5.0
Bazin	0.33	2.62	2.46	2.93	2.97	2.98	3.01	3.04					
Bazin	0.33	6.56	2.46	2.70	2.82	2.87	2.89	2.92					
U. S. Deep Waterways	0.33	2.62	4.57	....	2.77	2.80	2.83	2.92	3.00	3.08	3.17	3.34	3.50
U. S. Deep Waterways	0.33	6.56	4.56	....	....	2.83	2.83	2.83	2.82	2.82	2.82	2.82	2.81

Table 5-5. Values of C in the Formula $Q = CLH^{3/2}$ for Broad-crested Weirs with Crests Inclined Slightly Downward

(a)

Crest	Energy head = H_e								
	0.5	0.6	0.7	0.8	0.9	1.0	1.2	1.4	1.5
Level	2.78	2.79	2.80	2.81	2.82	2.83	2.85	2.85	2.85
Slope = 0.004	2.95	2.94	2.93	2.92	2.91	2.90	2.88	2.87	2.87
Slope = 0.026	3.07	3.06	3.05	3.04	3.03	3.02	3.00	2.99	

(b)

Slope of crest	Length of weir in feet	Head in feet, H						
		0.1	0.2	0.3	0.4	0.5	0.6	0.7
12 to 1	3.0	2.58	2.87	2.57	2.60	2.84	2.81	2.70
18 to 1	3.0	2.91	2.92	2.53	2.60	2.80	2.74	2.62
18 to 1	10.0	2.52	2.68	2.73	2.80	2.90	2.80	2.68

Table 5-6. Values of C in the Formula $Q = CLH^{3/2}$ for Weirs of Triangular Cross Section with Vertical Upstream Face and Sloping Downstream Face

Slope of downstream face	Height of weir in feet, P	Head in feet, H										
		0.2	0.3	0.4	0.5	0.6	0.7	0.8	0.9	1.0	1.2	1.5
Hor. Vert.												
1 to 1	2.46	3.88	3.85	3.85	3.85	3.85	3.85	3.85	3.85	3.85	3.85	3.85
2 to 1	2.46	3.48	3.48	3.49	3.49	3.50	3.50	3.50	3.50	3.50	3.51	3.51
2 to 1	1.64	3.56	3.47	3.47	3.51	3.54	3.57	3.58	3.58	3.58	3.59	3.57
3 to 1	1.64	....	2.90	3.11	3.22	3.26	3.33	3.37	3.40	3.40	3.41	3.41
5 to 1	2.46	....	3.08	3.06	3.05	3.05	3.07	3.09	3.12	3.13	3.13	3.13
10 to 1	2.46	....	2.82	2.83	2.84	2.86	2.89	2.90	2.91	2.91	2.92	2.93

STRUCTURAL CALCULATIONS

STRUCTURAL NOTES

CODE

1 COMPLY WITH AASHTO STANDARD SPECIFICATIONS FOR HIGHWAY BRIDGES, 17TH EDITION-2002

FOUNDATIONS

1 SOIL REPORT BY NINYO & MOORE PROJECT NO 601052001
2 PLACE FOUNDATION CONCRETE ONLY ON CLEAN FIRM INSPECTED BEARING MATERIAL ALL FOUNDATION EXCAVATIONS MUST BE INSPECTED BY A QUALIFIED GEOTECHNICAL ENGINEER TO INSURE PROPER FOUNDATION BEARING

3 REFER TO SOILS REPORT FOR SITE GRADING, SUBGRADE SOIL PREPARATION AND FILL AND COMPACTION REQUIREMENTS

4 FOUNDATIONS ARE DESIGNED FOR DRY CONDITIONS AND MUST REMAIN DRY DURING CONSTRUCTION

5 EXPANSIVE NATIVE SOILS SHOULD NOT BE USED AS RETAINING WALL BACKFILL - SEE SOILS REPORT

CONCRETE

1 CONCRETE QUALITY CONFORM TO AASHTO DIVISION II - SECTION B

2 CONCRETE REGULAR WEIGHT (144 pcf) WITH TYPE II CEMENT PER AASHTO M85 (ASTM C150), AGGREGATE PER AASHTO M6 & AASHTO M80 (ASTM C33), AND POTABLE WATER A MAXIMUM OF 18% BY WEIGHT OF THE TOTAL CEMENTITIOUS MATERIALS MAY BE REPLACED BY FLY-ASH, PROVIDING THE FLY-ASH CONFORMS TO AASHTO M295 (ASTM C618 TYPE F)

3 AGGREGATE SIZE 1" MINIMUM (SIZE NO 5 56 OR 57) FOR FOOTINGS AND OTHER MASS CONCRETE, AND 3/4" MINIMUM (SIZE NO 6) FOR OTHER CONCRETE

4 MINIMUM 28-DAY COMPRESSIVE STRENGTH 3000 psi

5 MAXIMUM SLUMP 4-1/2"

6 MECHANICALLY VIBRATE ALL CONCRETE

7 NO ADMIXTURES WITHOUT APPROVAL ADMIXTURES CONTAINING CHLORIDES SHALL NOT BE USED CONCRETE SHALL NOT BE IN CONTACT WITH ALUMINUM

8 WAIT 48 HOURS BETWEEN ADJACENT CONCRETE CASTINGS

9 CURE CONCRETE MEMBERS WITH POLYETHYLENE FOR 5 DAYS OR WITH A CURING COMPOUND APPROVED BY THE ENGINEER

10 SUBMIT MIX DESIGNS FOR REVIEW

11 MAXIMUM FREE DROP OF ANY CONCRETE 6'-0"

12 DRYPACK SHALL BE ONE PART CEMENT AND 2-1/2 PARTS SAND WITH JUST ENOUGH WATER TO HYDRATE CEMENT AND FORM A BALL SHOWING MOISTURE ON THE SURFACE WHEN SQUEEZED IT SHALL BE RAMMED IN TIGHT TO MAXIMUM DENSITY ATTAINABLE MINIMUM 28-DAY STRENGTH TO BE 5000 psi AS AN ALTERNATE TO DRYPACK, PROVIDE NON SHRINK GROUT

13 GROUT SHALL BE NON-METALLIC, NON-SHRINK GROUT WITH A MINIMUM COMPRESSIVE STRENGTH OF 4000 psi IN 3 DAYS, MIXED AND INSTALLED IN ACCORDANCE WITH THE MANUFACTURER'S RECOMMENDATIONS

REINFORCING

1 AASHTO M31 (ASTM A 615), GRADE 60 EXCEPT AS FOLLOWS
A FIELD BENT AND/OR WELDED BARS ASTM A706

2 REINFORCING BARS DEFORMED EXCEPT #2 BARS AND WELDED PLAIN WIRE FABRIC

3 CONCRETE COVERAGE FOR REINFORCING BARS (TO FACE OF BAR INCLUDING STIRRUPS AND TIES) EXCEPT AS SHOWN OR NOTED
A UNFORMED CONCRETE IN CONTACT WITH EARTH 3"
B FORMED CONCRETE IN CONTACT WITH EARTH 2"
C WALL EXTERIOR FACE 1-1/2"
D WALL INTERIOR FACE 1"
E SLABS 1"
F BEAMS 1-1/2"

REINFORCING (CONT)

4 LAP SPLICES IN CONCRETE AASHTO CLASS "C" SPLICE
A EXCEPT AS OTHERWISE SHOWN OR NOTED IN BEAMS AND SLABS NOT ON GRADE, SPLICE BOTTOM BARS OVER SUPPORTS AND TOP BARS AT MID-SPAN ONLY
B STAGGER ALL SPLICE LOCATIONS 1 LAP LENGTH MINIMUM SEE DETAILS FOR VARIATION FROM MINIMUM

5 SPLICE REINFORCING ONLY AT APPROVED LOCATIONS

6 REINFORCING SPACING'S GIVEN ARE MAXIMUM ON CENTER AND ALL REINFORCING IS CONTINUOUS UNLESS OTHERWISE NOTED

7 PROVIDE BENT CORNER REINFORCING TO MATCH AND LAP WITH HORIZONTAL REINFORCING AT CORNERS AND INTERSECTIONS OF WALLS, BEAMS AND FOOTINGS PER A C I DETAILING MANUAL (SP-66)

8 DOWEL ALL VERTICAL REINFORCING TO FOUNDATIONS

9 SECURELY TIE ALL REINFORCING EMBEDDED ITEMS IN POSITION BEFORE PLACING CONCRETE OR GROUT

10 SUBMIT PLACING DRAWINGS PER A C I DETAILING MANUAL (SP-66) FABRICATE AFTER ENGINEER'S REVIEW INCLUDE ELEVATIONS SHOWING REINFORCING STEEL AT ALL CONCRETE WALLS AND FOOTINGS

11 WELD REINFORCING BARS IN CONFORMANCE WITH AWS D1.4-92 USE LOW HYDROGEN ELECTRODES

12 PLACE REINFORCING PER AASHTO, ACI 318-89 AND C R S I STANDARDS

STRUCTURAL STEEL, BOLTS AND WELDS

1 LATEST AISC AND AWS CODES AND HANDBOOKS APPLY

2 ROLLED SECTIONS AND PLATES ASTM A36 OR "DUAL CLASSIFICATION" ASTM A36/572, GRADE 50, F_y = 36 ksi MINIMUM, EXCEPT WHERE SPECIFICALLY NOTED ON THE DRAWINGS

3 PIPES ASTM A53, GRADE B F_y = 35 ksi MINIMUM

4 BOLTS AND PLAIN ANCHORS ASTM A307

5 WELDING RODS E-70 SERIES LOW HYDROGEN "JET" WELDING RODS (E7024) SHALL NOT BE USED FOR ANY STRUCTURAL STEEL WELDING

6 ACCURATELY SAW OR FINISH ENDS TO A TRUE PLANE TORCH CUT IS NOT ALLOWED

7 COMPLY WITH AMERICAN WELDING SOCIETY CODES AND STANDARDS ALL WELDERS SHALL HOLD VALID CERTIFICATES AND HAVE CURRENT EXPERIENCE IN THE TYPE OF WELD CALLED FOR CERTIFICATES SHALL BE THOSE ISSUED BY AN ACCEPTED TESTING AGENCY AUTHORIZED BY AWS

8 WELDS INDICATED WITH A SHOP WELD SYMBOL MAY BE MADE IN THE FIELD WITH APPROVAL OF THE STRUCTURAL ENGINEER

9 SUBMIT SHOP DRAWINGS, FABRICATE AFTER ENGINEER'S REVIEW

10 ALL STRUCTURAL SHOP WELDING SHALL BE DONE IN A CITY APPROVED FABRICATOR'S SHOP

11 ALL STEEL PARTS SHALL BE GIVEN ONE SHOP COAT OF NO 1 PAINT AND TWO FIELD COATS OF NO 10 PAINT PER M.A.G STD. SECTION 790.

SUPPLEMENTARY NOTES

1 VERIFY ALL DIMENSIONS AND CONDITIONS PRIOR TO STARTING WORK NOTIFY THE ENGINEER OF ANY DISCREPANCIES OR INCONSISTENCIES

2 VERIFY IN FIELD ALL EXISTING CONDITIONS SHOWN ON DRAWINGS

3 ESTABLISH AND VERIFY ALL OPENINGS AND INSERTS WITH APPROPRIATE TRADES DRAWINGS

4 PROVIDE ALL NECESSARY TEMPORARY BRACING, SHORING, GUYING, OR OTHER MEANS TO AVOID EXCESSIVE STRESSES AND TO HOLD STRUCTURAL ELEMENTS IN PLACE DURING CONSTRUCTION

SUPPLEMENTARY NOTES (CONT)

5 THE COST OF ADDITIONAL DESIGN WORK DUE TO ERRORS OR OMISSIONS IN CONSTRUCTION SHALL BE DONE BY THE CONTRACTOR

6 ANY ENGINEERING DESIGN PROVIDED BY OTHERS AND SUBMITTED FOR REVIEW SHALL BEAR THE SEAL AND SIGNATURE OF AN ENGINEER REGISTERED IN ARIZONA IF THIS ENGINEERING DESIGN REQUIRES SPECIAL STRUCTURAL INSPECTION, THEY SHALL BE RESPONSIBLE FOR THE INSPECTION

7 DETAILS ON THE STRUCTURAL DRAWINGS ARE TYPICAL VERIFY ALL DIMENSIONS WITH THE CIVIL DRAWINGS

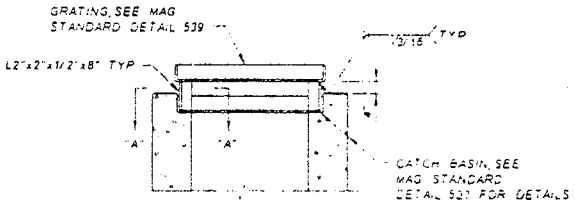

CATCH BASIN SECTION

NOT TO SCALE

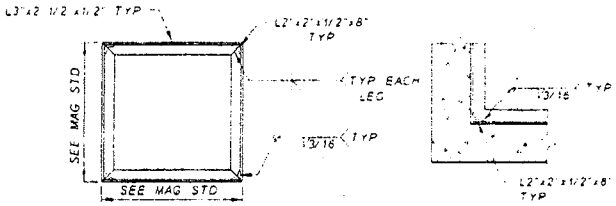

GRATE SEAT - PLAN

NOT TO SCALE

SECTION A-A

NOT TO SCALE

CATCH BASIN RAISED GRATE DETAILS

NOT TO SCALE

NO	REVISION	BY	DATE
3			
2			
1			

FLOOD CONTROL DISTRICT OF MARICOPA COUNTY
ENGINEERING DIVISION

MCDOWELL ROAD BASIN AND STORM DRAIN PROJECT
PCN 420.03 31

	BY	DATE
DESIGNED	SMN	10/04/06
DRAWN	MSK	10/04/06
CHECKED	KJK/DJL	10/04/06

Kimley-Horn and Associates, Inc.

DRAWING NO		SHEET OF
ST1	STRUCTURAL NOTES	43 74

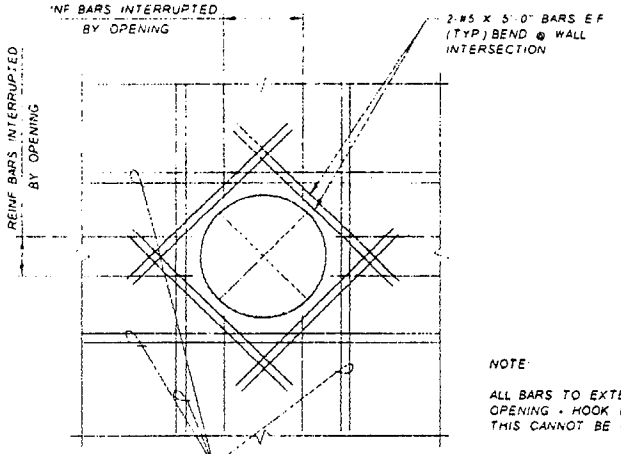

NOTE

NO ADD'L REINF REQ'D IF OPENINGS ARE LESS THAN 10"

NOTE

ALL BARS TO EXTEND 2'-6" PAST OPENING - HOOK BARS WHERE THIS CANNOT BE OBTAINED.

PROVIDE ADDITIONAL REINF BARS HAVING THE EQUIVALENT CROSS SECTIONAL AREA AND LENGTH OF REINF BARS INTERRUPTED BY OPENING. CONCENTRATE HALF EACH SIDE OF OPENING AT 3" (MAX) SPACING WHERE WALL OCCURS @ EDGES. CONCENTRATE ALL INTERRUPTED BARS AT SIDE OF OPENING OPPOSITE WALL

TYP REINFORCING AT OPENINGS

NOT TO SCALE

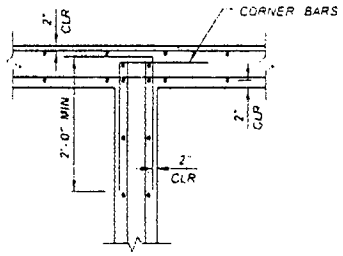

AT INTERSECTION - PLAN

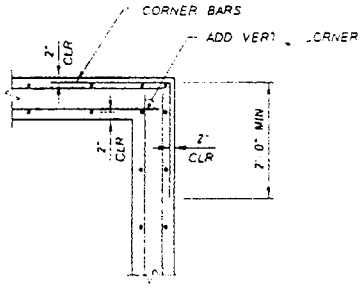

AT CORNER - PLAN

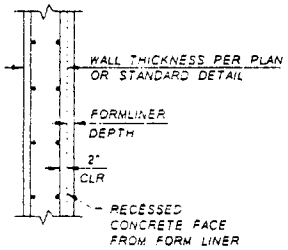

TYPICAL CLEAR COVER W/FORMLINER

NOT TO SCALE

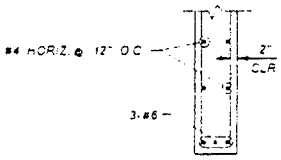

NOTE

SEE PLANS FOR TYPICAL WALL REINFORCING

OPENING - ELEVATION

AT TOP, BOTTOM & SIDE OF OPENING ALSO AT TOP & FREE ENDS OF WALL

TYPICAL CONCRTE WALL DETAILS

NOT TO SCALE

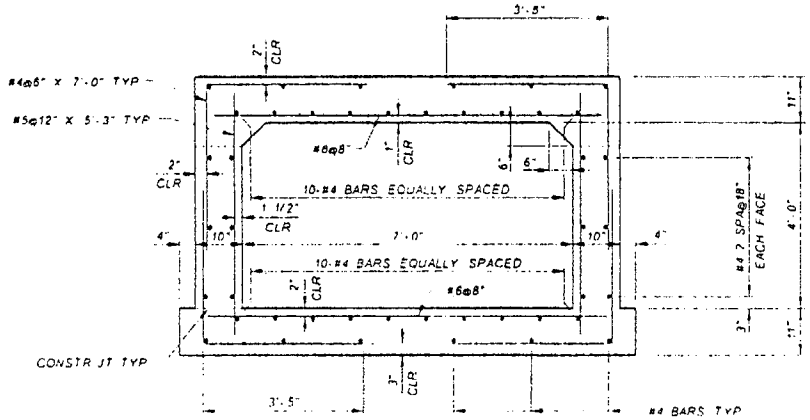

TYPICAL SECTION - 7'X4' RCBC

SCALE 1/2" = 1'-0"

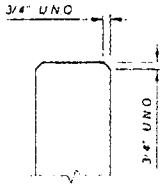

NOTE

CHAMFER ALL STRUCTURAL PIPE INLET AND OUTLET EXPOSED EDGES 3/4" UNO

CHAMFER DETAIL

NOT TO SCALE

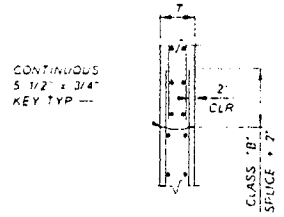

TYPICAL CONSTRUCTION JOINT

NOT TO SCALE

NO	REVISION	BY	DATE
3			
2			
1			

FLOOD CONTROL DISTRICT OF MARICOPA COUNTY
ENGINEERING DIVISION

MCDOWELL ROAD BASIN AND STORM DRAIN PROJECT
PCN 420 03 31

	BY	DATE
DESIGNED	SMN	10/04/06
DRAWN	MSK	10/04/06
CHECKED	KJKOL	10/04/06

Kimley-Horn and Associates, Inc.

DRAWING NO. S12 — TYPICAL DETAILS — SHEET 44 OF 74

STRUCTURE #2

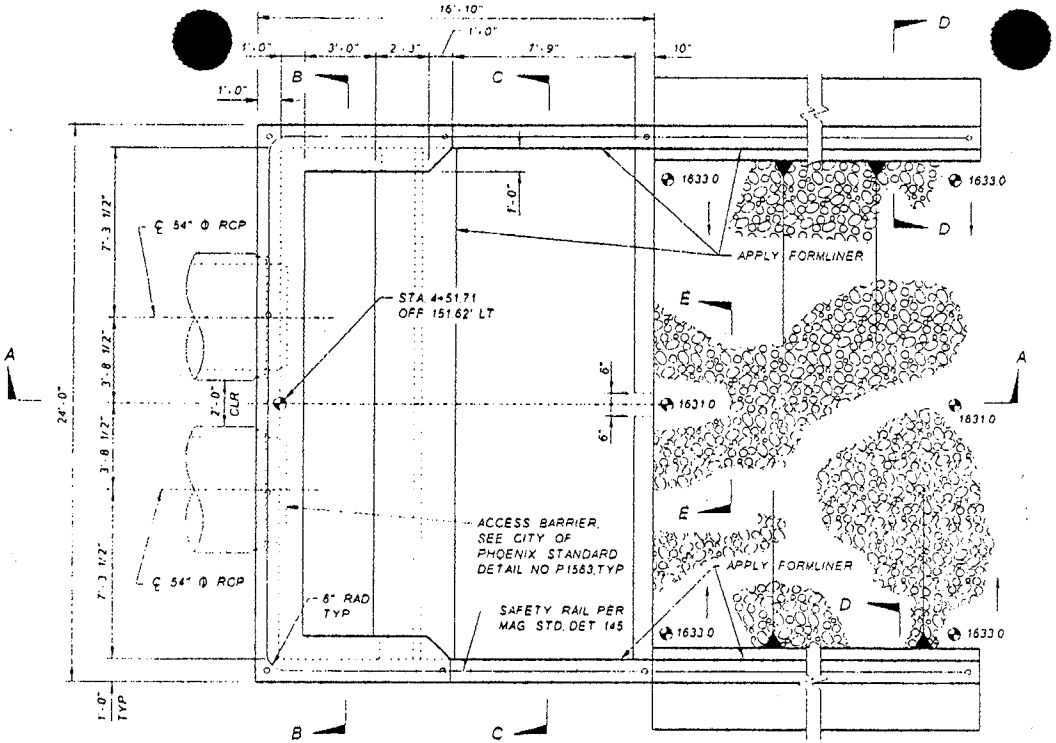

PLAN
SCALE = 3/8" = 1'-0"

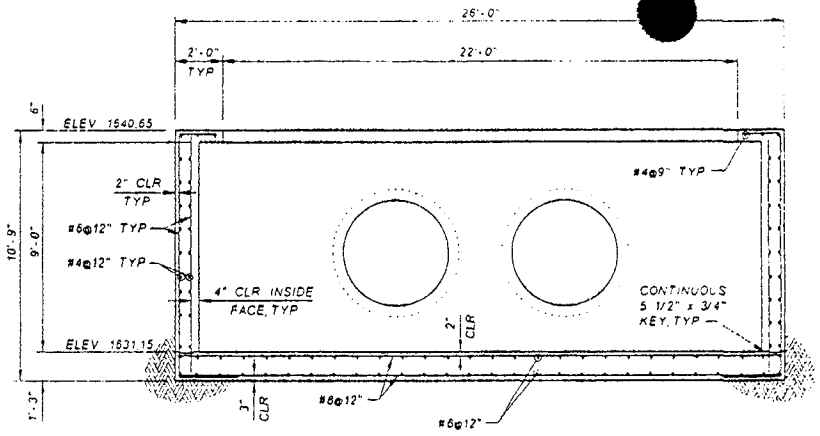

NOTE SAFETY RAIL NOT SHOWN

SECTION B-B
SCALE = 3/8" = 1'-0"

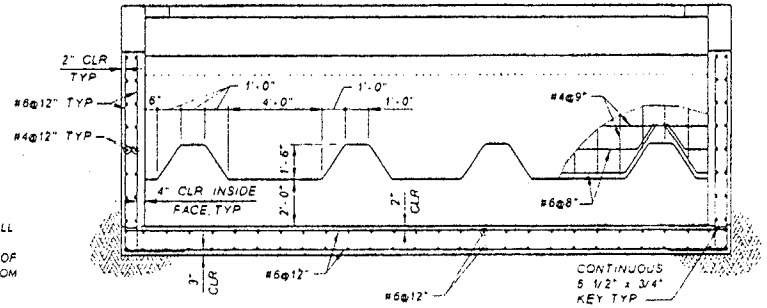

NOTE SAFETY RAIL NOT SHOWN

SECTION C-C
SCALE = 3/8" = 1'-0"

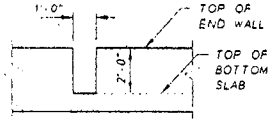

ELEVATION E-E

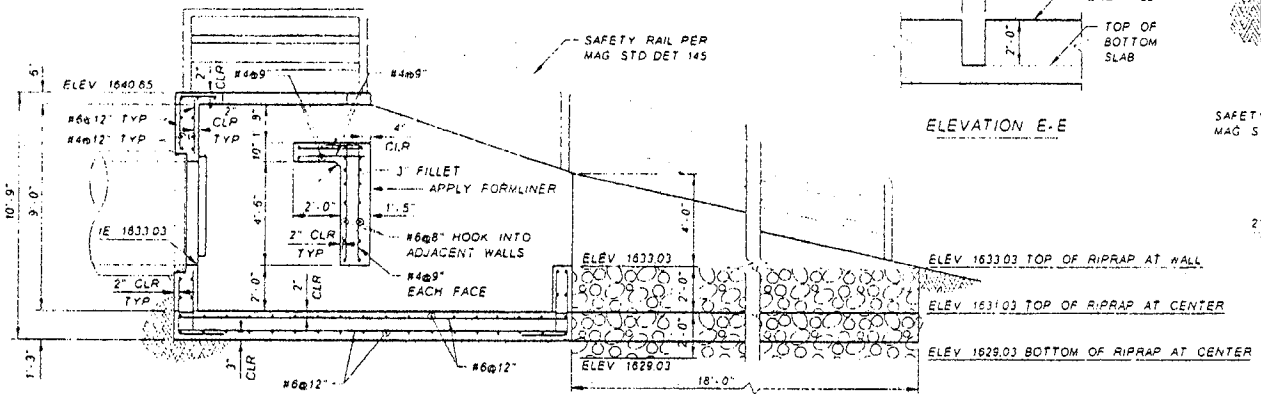

SECTION A-A
SCALE = 3/8" = 1'-0"

NOTE: FORMLINER SHALL MATCH REQUIREMENTS SPECIFIED IN THE SPECIAL PROVISIONS

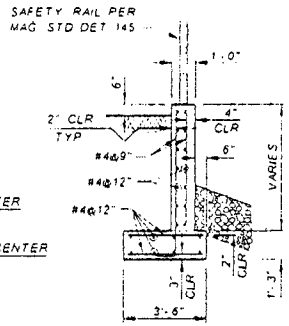

SECTION D-D
SCALE = 3/8" = 1'-0"

NO	REVISION	BY	DATE
3			
2			
1			

FLOOD CONTROL DISTRICT OF MARICOPA COUNTY
ENGINEERING DIVISION

MCDOWELL ROAD BASIN AND STORM DRAIN PROJECT
PCN 420.03.31

	BY	DATE
DESIGNED	BMA	10/04/06
DRAWN	MSK	10/04/06
CHECKED	KJK/DJL	10/04/06

Kimley-Horn and Associates, Inc

DRAWING NO ST3 | STRUCTURE #2 | SHEET 45 OF 74

Concrete Box Member Design Forces: STRUCTURE 2

Wall Information (Assumes design as a cantilevered retaining wall):

Wall Height: $h_{wall} := 9.5 \cdot ft$

Lateral Soil Pressure:

Soil angle of internal friction: $\phi := 34 \cdot deg$

Unit weight of soil: $\gamma := 120 \cdot pcf$

Bottom Slab Information (Assumes design a one-way simple span):

Design of bottom slab based on soil pressure. Soil pressure calculated assuming all loads are evenly distributed over the area of the bottom slab. - Since walls designed as vertical cantilevered walls will need to confirm if reinforcement requirements from moment transfer from vertical walls controls bottom slab design.

Design Bottom Slab Span:	$l_{bslab} := 9 \cdot ft$	
Design Bottom Slab Thickness:	$t_{bslab} := 15 \cdot in$	
Area of Bottom Slab	$area_{bslab} := 384 \cdot ft^2$	(24' x 16')
Perimeter of Box Structure:	$perim := 56 \cdot ft$	(conservatively assume full height wall on 3 sides)
Design Wall Thickness:	$t_{wall} := 12 \cdot in$	
Design Wall Height:	$h_{wall} := 9.5 \cdot ft$	
Baffle Beam Height:	$bb_h := 5.5 \cdot ft$	
Baffle Beam Thickness:	$bb_t := 1.25 \cdot ft$	
Baffle Beam Length:	$bb_l := 24 \cdot ft$	
Baffle Beam Top Overhang Width:	$bbt_w := 2.0 \cdot ft$	
Baffle Beam Top Overhang Thickness:	$bbt_t := 0.83 \cdot ft$	

Load from Wall Selfweight and Baffle Beam:

$$P_{wall\_baffle} := t_{wall} \cdot 150 \cdot pcf \cdot perim \cdot h_{wall} + 150 \cdot pcf \cdot \left(bb_h \cdot bb_t \cdot bb_l + bbt_w \cdot bbt_t \cdot bb_l\right)$$

Ignore Bottom Slab Selfweight since it will cancel itself out in the design

Total Load for soil pressure calculations:

$$P_{total} := P_{wall\_baffle} \qquad P_{total} = 110.526\,kip$$

Soil Pressure for Design of Bottom Slab:

$$soilpres := \frac{P_{total}}{area_{bslab}} \qquad soilpres = 0.288\,ksf$$

Positive Moment at Midspan of Bottom Slab:

$$M := \frac{soilpres \cdot 1\,ft \cdot l_{bslab}^{2}}{8} \qquad M = 2.914\,kft$$

$$M_u := 1.3M \qquad M_u = 3.789\,kft$$

Shear at End of wall:

$$V := \frac{soilpres \cdot 1\,ft \cdot l_{bslab}}{2} \qquad V = 1.295\,kip$$

$$V_u := 1.3V \qquad V_u = 1.684\,kip$$

Kimley-Horn and Associates, Inc.
7878 N. 16th Street
Suite 300
Phoenix, AZ 85020

Title: Outlet Wall Design - Structure 2 | Page
Job #: 091131012 | Dsgnr: KJK | Date: APR 4,2006
Description: Since open box design walls as cantilevered retaining

This Wall in File: K:\Rdwy\Structural\McDowell Road\Desig

Retain Pro 2005 (c) Copyright 1989-2005
www.retainpro.com/support for latest release
Registration # RP-1146815 2005003

Cantilevered Retaining Wall Design

Code: AASHTO

Criteria

Retained Height	=	9.00 ft
Wall height above soil	=	0.50 ft
Slope Behind Wall	=	0.00 :1
Height of Soil over Toe	=	0.00 in
Wind on Stem	=	0.0 psf

Vertical component of active lateral soil pressure options
USED for Soil Pressure
NOT USED for Sliding Resistance
NOT USED for Overturning Resistance

Soil Data

Allow Soil Bearing	=	2,000.0 psf
Rankine Soil Pressure calculation		
Soil Friction Angle	=	34.0 deg
Active Pressure Ka*Gamma	=	33.0 psf/ft
Passive Pressure Kp*Gamma	=	424.5 psf/ft
Soil Density	=	120.00 pcf
Footing/Soil Friction	=	0.300
Soil height to ignore for passive pressure	=	0.00 in

Footing Dimensions & Strengths

Toe Width	=	4.25 ft
Heel Width	=	1.00
Total Footing Width	=	5.25
Footing Thickness	=	15.00 in
Key Width	=	0.00 in
Key Depth	=	0.00 in
Key Distance from Toe	=	0.00 ft

f'c = 3,000 psi Fy = 60,000 psi
Footing Concrete Density = 150.00 pcf
Min. As % = 0.0018
Cover @ Top = 2.00 in @ Btm = 3.00 in

Surcharge Loads

Surcharge Over Heel = 120.0 psf
NOT Used To Resist Sliding & Overturning
Surcharge Over Toe = 0.0 psf
NOT Used for Sliding & Overturning

Lateral Load Applied to Stem

Lateral Load	=	0.0 #/ft
Height to Top	=	0.00 ft
Height to Bottom	=	0.00 ft

Adjacent Footing Load

Adjacent Footing Load	=	0.0 lbs
Footing Width	=	0.00 ft
Eccentricity	=	0.00 in
Wall to Ftg CL Dist	=	0.00 ft
Footing Type		
Base Above/Below Soil at Back of Wall	=	0.0 ft
Poisson's Ratio	=	0.300

Axial Load Applied to Stem

Axial Dead Load	=	0.0 lbs
Axial Live Load	=	0.0 lbs
Axial Load Eccentricity	=	0.0 in

*Design Summary

Wall Stability Ratios

Overturning	=	1.19 Ratio < 1.5*	
Slab Resists All Sliding *			
Total Bearing Load	=	2,954 lbs	
resultant ecc	=	13.82 in	
Soil Pressure @ Toe	=	1,337 psf	OK
Soil Pressure @ Heel	=	0 psf	OK
Allowable	=	2,000 psf	
Soil Pressure Less Than Allowable			
ACI Factored @ Toe	=	1,417 psf	
ACI Factored @ Heel	=	0 psf	
Footing Shear @ Toe	=	15.4 psi	OK
Footing Shear @ Heel	=	0.0 psi	OK
Allowable	=	93.1 psi	

Sliding Calcs Slab Resists All Sliding *

Lateral Sliding Force	=	2,103.4 lbs	
less 100% Passive Force	=	- 331.6 lbs	
less 100% Friction Force	=	- 722.8 lbs	
Added Force Req'd	=	1,049.0 lbs	NG
for 1.5 : 1 Stability	=	2,100.7 lbs	NG

Load Factors

Building Code	AASHTO
Dead Load	1.300
Live Load	2.170
Earth, H	1.690
Wind, W	1.300
Seismic, E	1.000

Stem Construction

		Top Stem
		Stem OK
Design Height Above Ftg	ft =	0.00
Wall Material Above "Ht"	=	Concrete
Thickness	=	12.00
Rebar Size	=	# 6
Rebar Spacing	=	12.00
Rebar Placed at	=	Edge
Design Data		
fb/FB + fa/Fa	=	0.510
Total Force @ Section	lbs =	2,838.1
Moment....Actual	ft-# =	9,288.2
Moment....Allowable	=	18,200.8
Shear....Actual	psi =	24.6
Shear....Allowable	psi =	82.2
Wall Weight	=	150.0
Rebar Depth 'd'	in =	9.63
LAP SPLICE IF ABOVE	in =	25.63
LAP SPLICE IF BELOW	in =	
HOOK EMBED INTO FTG	in =	6.00
Masonry Data		
f'm	psi =	
Fs	psi =	
Solid Grouting	=	
Special Inspection	=	
Modular Ratio 'n'	=	
Short Term Factor	=	
Equiv. Solid Thick.	=	
Masonry Block Type	=	
Concrete Data		
f'c	psi =	3,000.0
Fy	psi =	60,000.0

Kimley-Horn and Associates, Inc.
7878 N. 16th Street
Suite 300
Phoenix, AZ 85020

Title: Outlet Wall Design - Structure 2 | Page
Job #: 091131012 | Dsgnr: KJK | Date: APR 4,2006
Description: Since open box design walls as cantilevered retaining

This Wall in File: K:\Rdwy\Structural\McDowell Road\Desig

Retain Pro 2005 (c) Copyright 1989-2005
www.retainpro.com/support for latest release
Registration # RP-1146815 2005003

Cantilevered Retaining Wall Design

Code: AASHTO

Footing Design Results

		Toe	Heel
Factored Pressure	=	1,417	0 psf
Mu' Upward	=	8,697	0 ft-#
Mu' Downward	=	2,201	0 ft-#
Mu' Design	=	6,495	0 ft-#
Actual 1-Way Shear	=	15.40	0.00 psi
Allow 1-Way Shear	=	93.11	0.00 psi

Toe Reinforcing = # 6 @ 12.00 in
Heel Reinforcing = # 6 @ 12.00 in
Key Reinforcing = None Spec'd

Other Acceptable Sizes & Spacings
Toe: #4@ 9.75 in, #5@ 15.00 in, #6@ 21.50 in, #7@ 29.00 in, #8@ 38.25 in, #9@ 48
Heel: Not req'd: Mu < S * Fr
Key: No key defined

Summary of Overturning & Resisting Forces & Moments

Item		.....OVERTURNING..... Force lbs	Distance ft	Moment ft-#		.....RESISTING..... Force lbs	Distance ft	Moment ft-#
Heel Active Pressure	=	2,129.9	3.70	7,871.2	Soil Over Heel	=	5.25	
Toe Active Pressure	=	-26.5	0.42	-11.0	Sloped Soil Over Heel	=		
Surcharge Over Toe	=				Surcharge Over Heel	=		
Adjacent Footing Load	=				Adjacent Footing Load	=		
Added Lateral Load	=				Axial Dead Load on Stem	=	0.00	
Load @ Stem Above Soil	=				Soil Over Toe	=		
					Surcharge Over Toe	=		
					Stem Weight(s)	=	1,425.0	4.75	6,768.8
					Earth @ Stem Transitions	=		
					Footing Weight	=	984.4	2.63	2,584.0
					Key Weight	=		
					Vert. Component	=		
Total	=	2,103.4	O.T.M. =	7,860.2		Total =	2,409.4 lbs	R.M. =	9,352.7

Resisting/Overturning Ratio = 1.19

Vertical Loads used for Soil Pressure = 2,954.2 lbs

Vertical component of active pressure used for soil pressure

DESIGNER NOTES

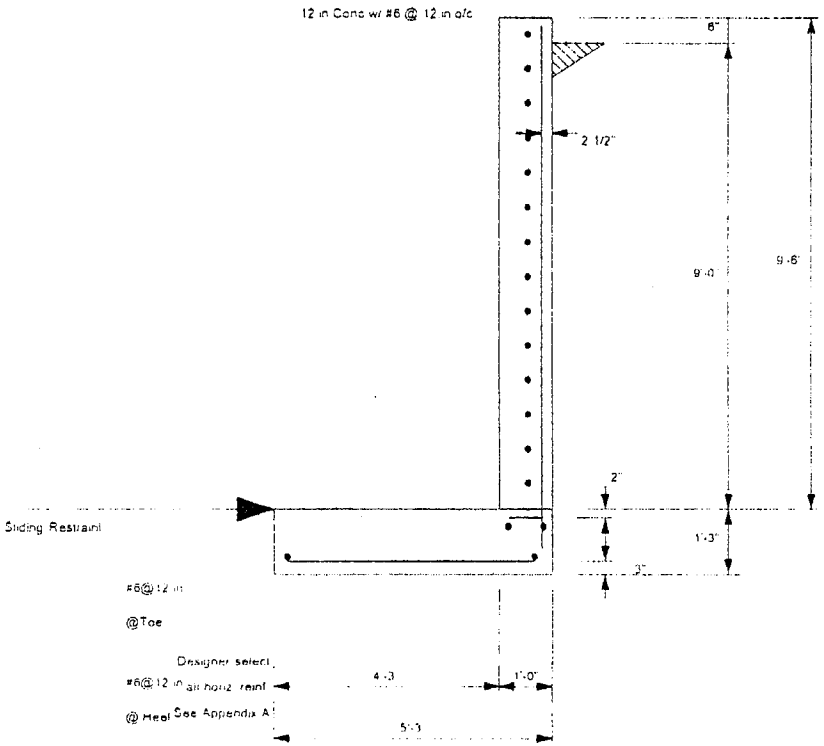
12 in Conc w/ #6 @ 12 in o/c
6"
2 1/2"
9'-0"
9'-6"
2"
1'-3"
3"
Sliding Restraint
#6@12 in
@Toe
Designer select
#6@12 in all horiz reinf
@ Heel See Appendix A
4'-3
1'-0"
5'-3

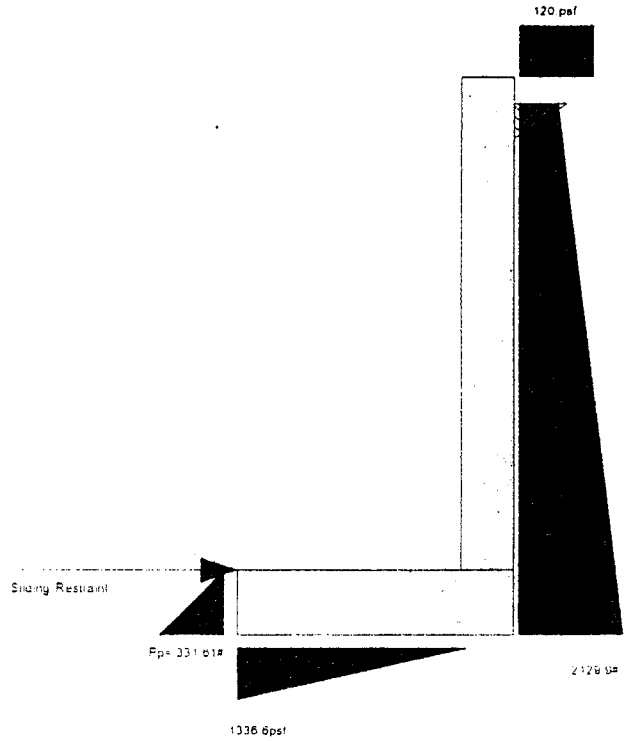
120 psf
Sliding Restraint
Pp= 331.61#
2128.9#
1336.6psf

Kimley-Horn and Associates, Inc.
7878 N. 16th Street
Suite 300
Phoenix, AZ 85020

Title : Wing Wall Design - Structure 2 Page
Job # 091131012 Dsgnr KJK Date APR 4,2006
Description
Wing wall design - assumed max wing wall height is 6'

This Wall in File: K:\Rdwy\Structural\McDowell Road\Desig

Retain Pro 2005 (c)Copyright 1989-2005
www.retainpro.com/support for latest releases
Registration # RP-1146816 2005003

Cantilevered Retaining Wall Design

Code: AASHTO

Criteria

Retained Height	=	5.00 ft
Wall height above soil	=	0.50 ft
Slope Behind Wall	=	0.00 :1
Height of Soil over Toe	=	0.00 in
Water on Stem	=	0.0 psf

Vertical component of active lateral soil pressure options
USED for Soil Pressure
NOT USED for Sliding Resistance
NOT USED for Overturning Resistance

Soil Data

Allow Soil Bearing	=	2,000.0 psf
Rankine Soil Pressure calculation		
Soil Friction Angle	=	34.0 deg
Active Pressure Ka*Gamma*		33.9 psf/ft
Passive Pressure Kp*Gamma		424.5 psf/ft
Soil Density	=	120.00 pcf
Footing/Soil Friction	=	0.300
Soil height to ignore for passive pressure	=	0.00 in

Footing Dimensions & Strengths

Toe Width	=	0.50 ft
Heel Width	=	3.00
Total Footing Width	=	3.50
Footing Thickness	=	15.00 in
Key Width	=	0.00 in
Key Depth	=	0.00 in
Key Distance from Toe	=	0.00 ft

f'c = 3,000 psi Fy = 60,000 psi
Footing Concrete Density = 150.00 pcf
Min. As % = 0.0018
Cover @ Top = 2.00 in @ Btm = 3.00 in

Surcharge Loads

Surcharge Over Heel	=	120.0 psf
NOT Used To Resist Sliding & Overturning		
Surcharge Over Toe	=	0.0 psf
NOT Used for Sliding & Overturning		

Axial Load Applied to Stem

Axial Dead Load	=	0.0 lbs
Axial Live Load	=	0.0 lbs
Axial Load Eccentricity	=	0.0 in

Lateral Load Applied to Stem

Lateral Load	=	0.0 #/ft
Height to Top	=	0.00 ft
Height to Bottom	=	0.00 ft

Adjacent Footing Load

Adjacent Footing Load	=	0.0 lbs
Footing Width	=	0.00 ft
Eccentricity	=	0.00 in
Wall to Ftg CL Dist	=	0.00 ft
Footing Type		Line Load
Base Above/Below Soil at Back of Wall	=	0.0 ft
Poisson's Ratio	=	0.300

OK SINCE TIED TO BASIN IT CANNOT MOVE

Design Summary

Wall Stability Ratios

Overturning	=	2.45 OK
Sliding	=	1.34 Ratio < 1.5!
Total Bearing Load	=	2,884 lbs
resultant ecc.	=	5.81 in
Soil Pressure @ Toe	=	1,508 psf OK
Soil Pressure @ Heel	=	140 psf OK
Allowable	=	2,000 psf
Soil Pressure Less Than Allowable		
ACI Factored @ Toe	=	1,822 psf
ACI Factored @ Heel	=	169 psf
Footing Shear @ Toe	=	0.0 psi OK
Footing Shear @ Heel	=	7.8 psi OK
Allowable	=	93.1 psi

Sliding Calcs (Vertical Component NOT Used)

Lateral Sliding Force	=	848.1 lbs
less 100% Passive Force	= -	331.6 lbs
less 100% Friction Force	= -	804.4 lbs
Added Force Req'd	=	0.0 lbs OK
for 1.5 : 1 Stability	=	136.2 lbs NG

Load Factors

Building Code	AASHTO
Dead Load	1.300
Live Load	2.170
Earth, H	1.690
Wind, W	1.300
Seismic, E	1.000

Stem Construction

		Top Stem	
		Stem OK	
Design Height Above Ftg	ft =	0.00	
Wall Material Above "Ht"	=	Concrete	
Thickness	=	12.00	
Rebar Size	=	# 4	
Rebar Spacing	=	10.00	
Rebar Placed at	=	Edge	
Design Data			
fb/FB + fa/Fa	=	0.177	
Total Force @ Section	lbs =	1,003.4	
Moment....Actual	ft-# =	1,911.2	
Moment....Allowable	=	10,815.1	
Shear.....Actual	psi =	8.2	
Shear.....Allowable	psi =	82.2	
Wall Weight	=	150.0	
Rebar Depth 'd'	in =	10.25	
LAP SPLICE IF ABOVE	in =	17.09	
LAP SPLICE IF BELOW	in =		
HOOK EMBED INTO FTG	in =	6.00	
Masonry Data			
fm	psi =		
Fs	psi =		
Solid Grouting	=		
Special Inspection	=		
Modular Ratio 'n'	=		
Short Term Factor	=		
Equiv. Solid Thick.	=		
Masonry Block Type = Medium Weight			
Concrete Data			
f'c	psi =	3,000.0	
Fy	psi =	60,000.0	

Kimley-Horn and Associates, Inc.
7878 N. 16th Street
Suite 300
Phoenix, AZ 85020

Title : Wing Wall Design - Structure 2 Page
Job # 091131012 Dsgnr KJK Date APR 4,2006
Description
Wing wall design - assumed max wing wall height is 6'

This Wall in File: K:\Rdwy\Structural\McDowell Road\Desig

Retain Pro 2005 (c)Copyright 1989-2005
www.retainpro.com/support for latest releases
Registration # RP-1146816 2005003

Cantilevered Retaining Wall Design

Code: AASHTO

Footing Design Results

		Toe	Heel
Factored Pressure	=	1,822	169 psf
Mu' Upward	=	218	968 ft-#
Mu' Downward	=	30	2,453 ft-#
Mu' Design	=	188	1,485 ft-#
Actual 1-Way Shear	=	0.00	7.80 psi
Allow 1-Way Shear	=	93.11	93.11 psi

Toe Reinforcing	=	# 4 @ 12.00 in
Heel Reinforcing	=	# 4 @ 12.00 in
Key Reinforcing	=	None Spec'd

Other Acceptable Sizes & Spacings
Toe: Not req'd Mu < S * Fr
Heel: Not req'd Mu < S * Fr
Key: No key defined

Summary of Overturning & Resisting Forces & Moments

Item		OVERTURNING Force lbs	Distance ft	Moment ft-#	RESISTING Force lbs	Distance ft	Moment ft-#
Heel Active Pressure	=	874.8	2.34	2,043.1			
Toe Active Pressure	=	-26.5	0.42	-11.0			
Surcharge Over Toe	=						
Adjacent Footing Load	=						
Added Lateral Load	=						
Load @ Stem Above Soil	=						
Soil Over Heel	=				1,200.0	2.50	3,000.0
Sloped Soil Over Heel	=						
Surcharge Over Heel	=						
Adjacent Footing Load	=						
Axial Dead Load on Stem	=					0.00	
Soil Over Toe	=						
Surcharge Over Toe	=						
Stem Weight(s)	=				825.0	1.00	825.0
Earth @ Stem Transitions	=						
Footing Weight	=				656.3	1.75	1,148.4
Key Weight	=						
Vert. Component	=						
Total	=	848.1	O.T.M. =	2,032.0	Total =	2,681.3 lbs	R.M.= 4,973.4

Resisting/Overturning Ratio = 2.45

Vertical Loads used for Soil Pressure = 2,883.8 lbs

Vertical component of active pressure used for soil pressure

DESIGNER NOTES

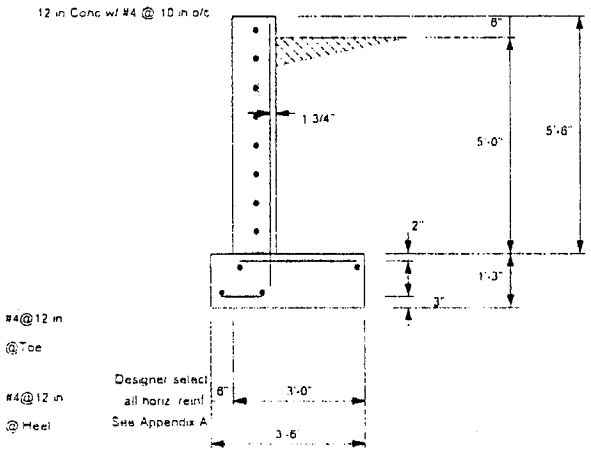
12 in Conc w/ #4 @ 10 in o/c
8"
1 3/4"
5'-0"
5'-6"
2"
1'-3"
3"
#4@12 in
@Toe
Designer select
all horiz reinf
See Appendix A
#4@12 in
@ Heel
8"
3'-0"
3'-6"

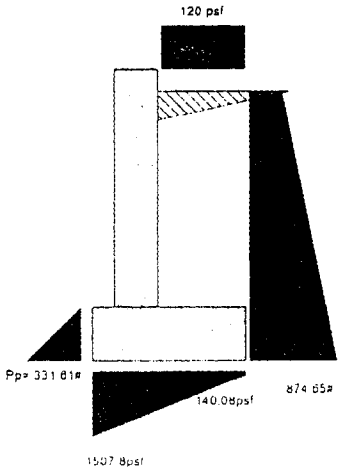
120 psf
Pp= 331.61#
140.08psf
874.65#
1507.8psf

Concrete Baffle Beam Member Design Forces:

STRUCTURE 2

Beam Information (Assumes design as a simple span beam for baffle beam):

Design Span Length: $span := 24 \cdot ft$

Spacing between dual 54" RCP: $spacing := 7.25 \cdot ft$

Load on Baffle due to flow from 2 - 54" RCP:

Flow rate per pipe (Q): $Q := 325 \cdot \frac{ft^3}{sec}$

Area of 54" RCP (A): $A := \frac{\pi \cdot (4.5 \cdot ft)^2}{4}$ $A = 15.904\ ft^2$

Flow velocity (v): $v := \frac{Q}{A}$ $v = 20.435\ \frac{ft}{sec}$

Water density (ρ) $\rho := 62.4 \cdot \frac{lb}{ft^3}$

Gravitational constant (g_c): $g_c := 32.2 \cdot \frac{lb \cdot ft}{lbf \cdot sec^2}$

Mass flow rate (*m*): $m := v \cdot A \cdot \rho$ $m = 20280\ \frac{lb}{sec}$

Force on baffle from flow rate (F): $F := \frac{m \cdot v}{g_c}$ $F = 12870\ lbf$

per 54" RCP

For design assume simple span span beam loaded with the reactions from the flow from the dual 54" RCP.

Positive Moment at Mid-span of baffle (per AISC LRFD Beam Diagrams pg 4-192):

$a := \frac{span - spacing}{2}$ $\quad a = 8.375\ ft$

$M_{midspan} := F \cdot a$ $\quad M_{midspan} = 107.787\ kft$

$M_{u\_midspan} := 1.3 \cdot 1.3 \cdot M_{midspan}$ $\quad M_{u\_midspan} = 182.16\ kft$

Shear at End of baffle (per AISC LRFD Beam Diagrams pg 4-192):

$V_{endwall} := F$ $\quad V_{endwall} = 12.87\ kip$

$V_{u\_endwall} := 1.3 \cdot 1.3 \cdot V_{endwall}$ $\quad V_{u\_endwall} = 21.75\ kip$

AASHTO REINFORCED CONCRETE BEAM DESIGN (LFD)

ENGLISH UNITS

REFERENCE: AASHTO 17th edition, 2002

Revision #	Revised By	Date	Checked By	Date	Description of Revision
1	BZS	12/29/04	DAC	12/29/04	Update of formatting

Kimley-Horn and Associates, Inc.

Job McDowell Road Subject Structure #2 Baffle Beam M+ Project No. 091131012

Designed by KJK Date 04/03/06 Checked by Date

AASHTO 17th Edition LFD R/C Beam Design

REFERENCE: AASHTO 17th Edition, 2002

Note: Input parameters are in yellow highlight. Checks for adequacy are in blue highlight with border

Base Units: ft = 1L lb = 1M sec = 1T K= 1K lbf = force

Define Units: kips := 1000·lbf degF := 1·K ksi := 1000psi

DESIGN LOCATION: BAFFLE BEAM M+

MATERIAL PROPERTIES:

CONCRETE :

$F'c := 3 \cdot ksi$ Concrete compressive strength

$z := 130 \frac{kips}{in}$ Quantity limiting distribution of flexural reinf. [AASHTO 8.16.8.4]

$W_c := .15 \cdot \frac{kips}{ft^3}$ [UNIT FORCE -- AASHTO 3.3.6]

REINFORCING STEEL :

$f_y := 60.0 \cdot ksi$ [Grade 60]

$f_s := 24.0 \cdot ksi$ [AASHTO 8.15.2.2 SERVICE LOAD]

$E_s := 29000ksi$ [AASHTO 8.7.2]

$\phi_m := .90$ Flexure - strength reduction factor [AASHTO 8.16.1.2.2]

$\phi_s := .85$ Shear - strength reduction factor [AASHTO 8.16.1.2.2]

CALCULATED MATERIAL PROPERTIES:

$fc := .4 \cdot F'c$ $\boxed{fc = 1.2ksi}$ [SERVICE LOAD]

$E_c := W_c^{1.5} \cdot 33 \cdot \sqrt{F'c} \cdot \left(\frac{ft^3}{lbf}\right)^{1.5} \cdot \sqrt{psi}$ $\boxed{E_c = 3320.56ksi}$ Elastic Modulus for concrete [AASHTO 8.7.1]

$n := floor\left(\frac{E_s}{E_c}\right) + if\left[.5 > \left(\frac{E_s}{E_c}\right) - floor\left(\frac{E_s}{E_c}\right), 0, 1\right]$ $\boxed{n = 9}$ Modular Ratio [AASHTO 8.15.3.4]

$\beta_1 := if\left[F'c \le 4 \cdot ksi, .85, .85 - (F'c - 4 \cdot ksi) \cdot .05 \cdot \frac{1}{ksi}\right]$ $\boxed{\beta_1 = 0.85}$ FOR F'c < 4ksi β_1 = .85 [AASHTO 8.16.2.7]

DESIGN LOADS:

LOAD FACTOR	SERVICE LOAD	
$Mu := 185 \cdot kips \cdot ft$	$M_{max} := 110 \cdot kips \cdot ft$	Use service load to check serviceabilty requirements
$Vu := 22 \cdot kips$	$M_{min} := 0 \cdot kips \cdot ft$	

GEOMETRY:

$b := 5.5 \cdot ft$ Width of compression flange $depth := 1.25 \cdot ft$ Gross depth of section

REINFORCING STEEL:

$cover := 2 \cdot in$ Clear cover to stirrups [AASHTO 8.22.1]

Use # $bar := 8$ **--- Moment reinforcement**

$AsNo := 6$ Total number of bars used Total Area of Reinforcing steel

$A_{bar} = 0.79\,in^2$ Bar area $As\_a := AsNo \cdot A_{bar}$

$diam_{bar} = 1\,in$ Bar dia. $As\_a = 4.74\,in^2$ Total area of flexure reinforcing

Use # $bar_s := 0$ **--- Shear reinforcement**

$AsNo_s := 4$ Total number of legs used Total Area of Reinforcing steel

$A_{bar_s} = 0\,in^2$ Bar area $As\_a_s := AsNo_s \cdot A_{bar_s}$

$diam_{bar_s} = 0\,in$ Bar dia. $As\_a_s = 0\,in^2$ Total area of shear reinforcing

Calc. the dc & d to tension reinf.:

$dc := cover + diam_{bar_s} + \frac{diam_{bar}}{2}$ $dc = 2.5\,in$ Distance from the tension face to centroid of first layer of tension reinf.

$d := depth - dc$ $\boxed{d = 12.5\,in}$ Distance from compression face to centroid of tension reinf.

BAR SPACING:

$main\_cover := cover + diam_{bar_s} + \frac{diam_{bar}}{2}$ assumes cover is uniform around bars (ie side cover = bottom cover)

$main\_cover = 2.5\,in$

$$main\_reinf\_spa := \frac{b - 2 \cdot (main\_cover)}{AsNo - 1}$$

$\boxed{main\_reinf\_spa = 12.2\,in}$ spacing between flexure reinforcing bars

ULTIMATE MOMENT CAPACITY: [AASHTO 8.16.3.1]

$$a := As\_a \cdot \frac{f_y}{.85 \cdot F'c \cdot b}$$ $a = 1.69\,in$

$$\phi Mn := \phi_m \cdot \left[As\_a \cdot f_y \cdot \left(d - \frac{a}{2} \right) \right]$$ $\boxed{\phi Mn = 248.6\,kips \cdot ft}$ > $\boxed{Mu = 185.00\,kips \cdot ft}$

MAX. FLEXURE REINF. [AASHTO 8.16.3.1.1]

$$\rho_{bal} := \frac{0.85 \cdot \beta_1 \cdot F'c}{f_y} \cdot \frac{87000 \cdot psi}{87000 \cdot psi + f_y} \qquad \rho_{bal} = 0.02138$$

$$\rho := \frac{As\_a}{b \cdot d} \qquad \rho = 0.00575 \qquad .75 \cdot \rho_{bal} = 0.01604 \quad > \quad \rho = 0.00575$$

MIN. FLEXURE REINF. [AASHTO 8.17.1.1]

$$Mc := \frac{b \cdot depth^2}{6} \cdot 7.5 \cdot \sqrt{psi} \cdot \sqrt{F'c} \qquad Mc = 84.73\,kips \cdot ft$$

CRACKING MOMENT on the basis of the modulus of rupture for normal weight concrete [AASHTO 8.15.2.1.1]

$\phi Mn = 248.6\,kips \cdot ft \quad > \quad 1.2 \cdot Mc = 101.67\,kips \cdot ft$

OR

[AASHTO 8.17.1.2] $\phi Mn = 248.6\,kips \cdot ft \quad > \quad 1.33 Mu = 246.05\,kips \cdot ft$

SERVICEABILITY REQUIREMENTS [AASHTO 8.16.8] - Use as general Check

$$k := \sqrt{2 \cdot n \cdot \rho + (n \cdot \rho)^2} - n \cdot \rho \qquad j := 1 - \frac{k}{3} \qquad k = 0.274$$

$$j = 0.9087$$

$$fs_{max} := \frac{M_{max}}{As\_a \cdot j \cdot d} \qquad fs_{min} := \frac{M_{min}}{As\_a \cdot j \cdot d} \qquad fc_{max} := fs_{max} \cdot \frac{k}{n \cdot (1 - k)}$$

$fs_{max} = 24.52\,ksi \quad < \quad f_s = 24\,ksi$

$fs_{min} = 0\,ksi$

$fc_{max} = 1.03\,ksi \quad < \quad fc = 1.2\,ksi$

FATIGUE STRESS LIMITS [AASHTO 8.16.8.3]

$rh := .3$ (r/h) of .3 is used as a default

$f_f := 21.\,ksi - 0.33 \cdot fs_{min} + 8.\,ksi \cdot rh \qquad f_f = 23.4\,ksi \quad > \quad (fs_{max} - fs_{min}) = 24.52\,ksi$

Max. stress range for reinf. steel

DISTRIBUTION OF FLEXURAL REINFORCEMENT [AASHTO 8.16.8.4]

$dc := if[cover > 2 \cdot in, dc - (cover - 2 \cdot in), dc] \qquad dc = 2.5\,in$ Use max. cover as 2"

$$A := \frac{2 \cdot dc \cdot b}{AsNo} \qquad A = 55\,in^2 \qquad f_{s\_z} := \frac{z}{(dc \cdot A)^{\frac{1}{3}}} \qquad f_{s\_z} = 25.19\,ksi$$

Effective tension area of conc. surrounding 1 bar
-- formula for 1 layer of steel

$f_{s\_df} := if(f_{s\_z} \le .6 \cdot f_y, f_{s\_z}, .6 \cdot f_y) \qquad f_{s\_df} = 25.19\,ksi \quad > \quad fs_{max} = 24.52\,ksi$

SHEAR STRENGTH [AASHTO 8.16.6.1.1]

$Vu_{reqd} := \frac{Vu}{\phi_s}$ $\boxed{Vu_{reqd} = 25.88\,kips}$

Shear Strength Provided by Concrete [AASHTO 8.16.6.2.1] (Assumes a rect. section)

$factor := \frac{Vu \cdot d}{Mu}$ $factor = 0.12$ $factor := if(factor > 1., 1., factor)$ $factor = 0.12$

$Fv_c := \begin{bmatrix} (1.9 \cdot \sqrt{psi} \cdot \sqrt{F'c} + 2500 \cdot psi \cdot \rho \cdot factor) \\ 2 \cdot \sqrt{psi} \cdot \sqrt{F'c} \end{bmatrix}$ $Fv_c = \begin{pmatrix} 105.85 \\ 109.54 \end{pmatrix} psi$

$Fvmax := 3.5 \cdot (\sqrt{psi} \cdot \sqrt{F'c})$ $Fvmax = 191.7\,psi$

$Fvc := if(max(Fv_c) < Fvmax, max(Fv_c), Fvmax)$ $Fvc = 109.54\,psi$ concrete shear strength

$Vc := Fvc \cdot b \cdot d$ $\boxed{Vc = 90.37\,kips}$ shear carried by concrete

IF $\boxed{Vc = 90.37\,kips}$ > $\boxed{Vu_{reqd} = 25.88\,kips}$ $\boxed{\text{No Shear reinf. required [AASHTO 8.19.1]}}$

If Shear Reinforcing is required [AASHTO 8.16.6.3]

$Vs_{reqd} := if(Vu_{reqd} - Vc < 0. \cdot kips, 0.000001 \cdot kips, Vu_{reqd} - Vc)$ $\boxed{Vs_{reqd} = 0\,kips}$

Max. shear reinf. spacing [AASHTO 8.19.1.2], AASHTO 8.19.3]

$smax := \begin{pmatrix} \frac{As\_a_s \cdot f_y}{50 \cdot psi \cdot b} \\ 24 \cdot in \\ \frac{d}{2} \end{pmatrix}$ $smax = \begin{pmatrix} 0 \\ 24 \\ 6.25 \end{pmatrix} in$ $smax := min(smax)$ $\boxed{smax = 0\,in}$

max stirrup spacing

Reduction for max spacing for high shear reinf. requirement: [AASHTO 8.16.6.3.8]

IF $\boxed{Vs_{reqd} = 0\,kips}$ > $\boxed{4 \cdot \sqrt{psi} \cdot \sqrt{F'c} \cdot b \cdot d = 180.75\,kips}$ Then reduce max. spacing by 1/2

$s_{max} := if(Vs_{reqd} > 4 \cdot \sqrt{psi} \cdot \sqrt{F'c} \cdot b \cdot d, .5 \cdot smax, smax)$ $\boxed{s_{max} = 0\,in}$

Max steel shear strength allowed: [AASHTO 8.16.6.3.9]

$\boxed{Vs_{reqd} = 0\,kips}$ < $\boxed{8 \cdot \sqrt{psi} \cdot \sqrt{F'c} \cdot b \cdot d = 361.5\,kips}$

Stirrup Spacing: [AASHTO 8.16.6.3]

$s := \frac{As\_a_s \cdot f_y \cdot d}{Vs_{reqd}}$ $s = 0\,in$

$s_{reqd} := if(s > s_{max}, s_{max}, s)$ Max. Stirrup spacing: $\boxed{s_{reqd} = 0\,in}$

CHECK CRACK CONTROL -- [AASHTO 17.6.4.7]

$d = 12.5\,in$ Distance from compression face to centroid of tension reinf.

$d_c := cover + 0.5 \cdot diam_{bar}$ Thickness of cover from tension fiber to center of tension reinf.

$\beta := 1 + \frac{d_c}{.7 \cdot (d)}$ $\beta = 1.29$ $A = 55\,in^2$ Effective tension area of conc. surrounding 1 bar. (1 layer of steel)

$f_s := \frac{155}{\beta \cdot \sqrt[3]{d_c \cdot A}} \cdot \frac{kip}{in}$ $fs_{ck} := if(f_s \le .6 \cdot f_y, f_s, .6 \cdot f_y)$

$fs_{ck} = 23.36\,ksi$

$f_s = 23.36\,ksi$

$\frac{fs_{ck}}{fs_{max}} = 0.95$ > 1.0

STRUCTURE #3

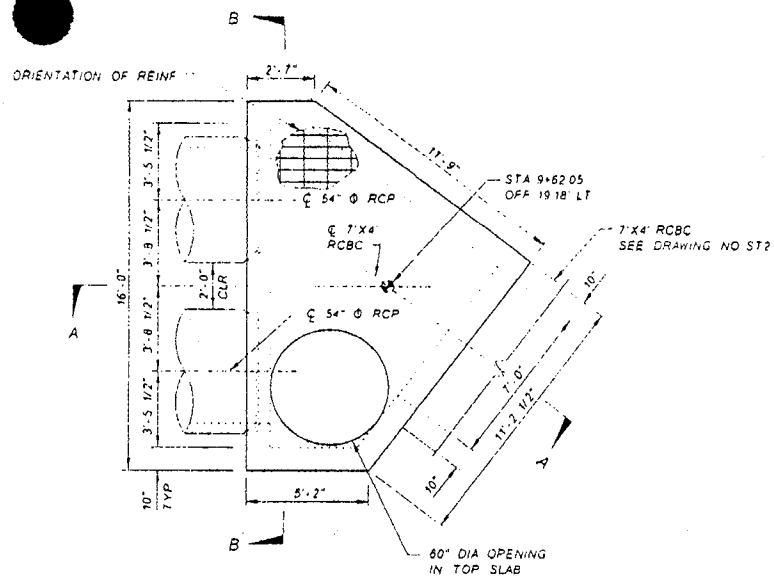

TOP PLAN
NTS

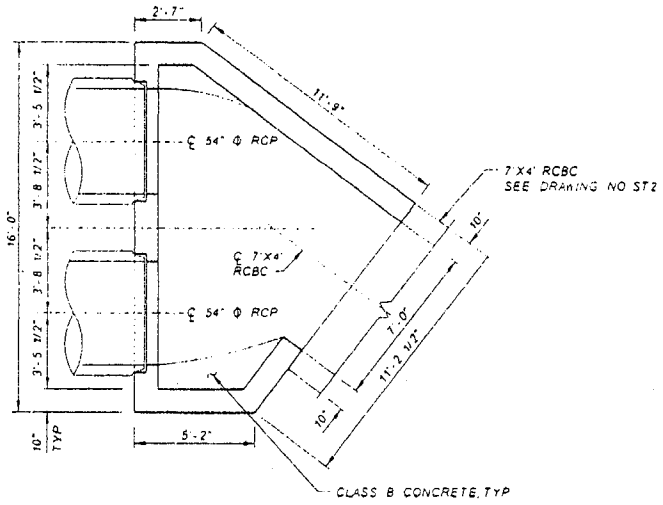

BOTTOM PLAN
NTS

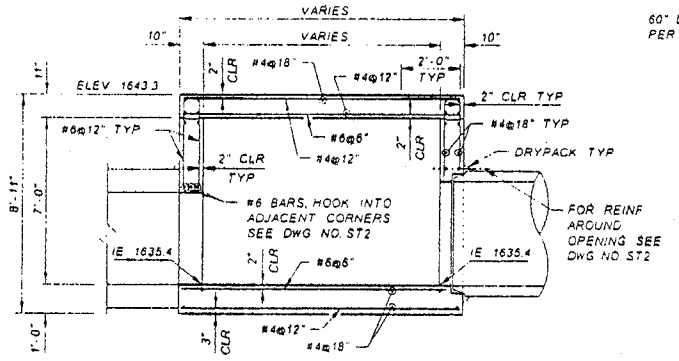

SECTION A-A
NTS

NOTE. MANHOLE RISER NOT SHOWN
FOR CLARITY

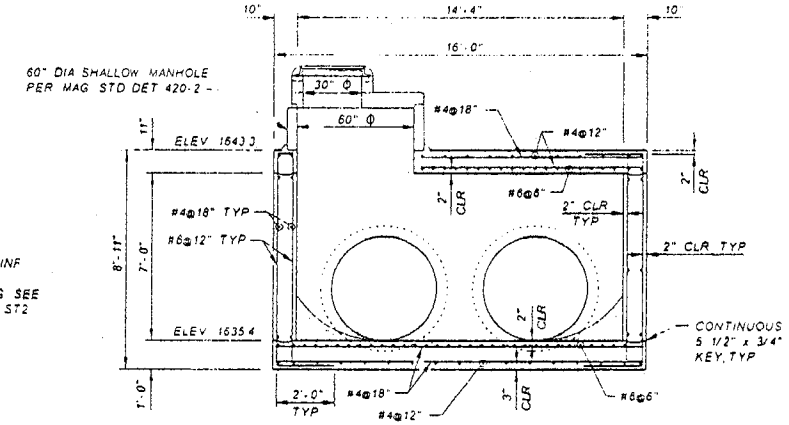

SECTION B-B
NTS

NO.	REVISION	BY	DATE
3			
2			
1			

FLOOD CONTROL DISTRICT
OF MARICOPA COUNTY
ENGINEERING DIVISION

MCDOWELL ROAD BASIN
AND STORM DRAIN PROJECT
PCN 420.03.31

	BY	DATE
DESIGNED	SMN	10/04/06
DRAWN	MSK	10/04/06
CHECKED	KJK/DJL	10/04/06

Kimley-Horn and Associates, Inc.

DRAWING NO. ST4 | STRUCTURE #3 | SHEET OF 46 74

Concrete Box Member Design Forces: STRUCTURE 3

Wall Information (Assumes design as a slab partiall fixed at the top and bottom slabs):

Wall Height: $h_{wall} := 7.0 \cdot ft$

Top Slab Thickness: $t_{tslab} := 0.917 \cdot ft$

Depth of Fill: $d_{fill} := 5.0 \cdot ft$

Height from btm wall to top of fill: $H := h_{wall} + t_{tslab} + d_{fill}$ $H = 12.917\ ft$

Per Geotechnical Report lateral load on walls is a uniform pressure since walls are restrained from moving.

Lateral Soil Pressure: $w_{soillat} := 20 \cdot H \cdot psf$ $w_{soillat} = 258.34\ plf$

Lateral Soil Pressure from Traffic Surcharge: $w_{soilsur} := 120 \cdot psf \cdot 1 \cdot ft$ $w_{soilsur} = 120\ plf$

Total Lateral Pressure on Wall: $w_{soil} := w_{soillat} + w_{soilsur}$

$w_{soil} = 378.34\ plf$

Positive Moment at Mid-span of wall (per AISC LRFD Beam Diagrams pg 4-190 & 4-195):

$$M_{midspan} := \frac{w_{soil} \cdot h_{wall}^2}{16} \qquad M_{midspan} = 1.159\ kft$$

$$M_{u\_midspan} := 1.3 \cdot M_{midspan} \qquad M_{u\_midspan} = 1.506\ kft$$

Negative Moment at End of wall (per AISC LRFD Beam Diagrams pg 4-195):

$$M_{endspan} := \frac{w_{soil} \cdot h_{wall}^2}{12} \qquad M_{endspan} = 1.545\ kft$$

$$M_{u\_endspan} := 1.3 \cdot M_{endspan} \qquad M_{u\_endspan} = 2.008\ kft$$

Shear at End of wall (per AISC LRFD Beam Diagrams pg 4-190):

$$V_{endwall} := \frac{w_{soil} \cdot h_{wall}}{2} \qquad V_{endwall} = 1.324\ kip$$

$$V_{u\_endwall} := 1.3 \cdot V_{endwall} \qquad V_{u\_endwall} = 1.721\ kip$$

Top Slab Information (Assumes design a one-way simple span):

Design Slab Span: $l_{slab} := 9.5 \cdot ft$

Design Slab Thickness: $t_{slab} := 10 \cdot in$

Depth of Fill: $d_{fill} := 5.0 \cdot ft$ $\quad$ $Impact := 1.00$

Unit Weight of Soil: $\gamma_{soil} := 125 \cdot pcf$

Truck Wheel Load (if applicable): $P := 16 \cdot kip$

Truck Wheel Load distribution per AASHTO 6.4 (if fill depth > 2 feet):

Distribute load over square with sides of "dist": $dist := 1.75 \cdot d_{fill}$ $\quad$ $dist = 8.75\ ft$

Equivalent uniform truck wheel load: $p_{wheel\_pres} := \frac{P}{dist^2} \cdot ft$ $\quad$ $p_{wheel\_pres} = 0.209\,klf$

Positive Moment at Midspan of Top Slab:

$$M_{DL} := \frac{\left(d_{fill} \cdot \gamma_{soil} + t_{slab} \cdot 150pcf\right) \cdot 1ft \cdot l_{slab}^2}{8} \qquad M_{DL} = 8.461\,kft$$

$$M_{LL} := \frac{1.2 \cdot p_{wheel\_pres} \cdot l_{slab}^2}{8} \qquad M_{LL} = 2.829\,kft$$

Modify equation based on fill depth - See above

$$M := M_{DL} + M_{LL} \cdot Impact \qquad M = 11.29\,kft$$

$$M_u := 1.3\left(1.0 \cdot M_{DL} + 1.67 \cdot M_{LL} \cdot Impact\right) \qquad M_u = 17.141\,kft$$

Shear at End of wall:

$$V_{DL} := \frac{\left(d_{fill} \cdot \gamma_{soil} + t_{slab} \cdot 150pcf\right) \cdot 1ft \cdot l_{slab}}{2} \qquad V_{DL} = 3.563\,kip$$

$$V_{LL} := \frac{1.2 \cdot p_{wheel\_pres} \cdot l_{slab}}{2} \qquad V_{LL} = 1.191\,kip$$

Modify equation based on fill depth - See above

$$V := V_{DL} + V_{LL} \cdot Impact \qquad V = 4.549\,kip$$

$$V_u := 1.3\left(1.0 \cdot V_{DL} + 1.67 \cdot V_{LL} \cdot Impact\right) \qquad V_u = 6.773\,kip$$

Bottom Slab Information (Assumes design a one-way simple span):

Design of bottom slab based on soil pressure. Soil pressure calculated assuming all loads are evenly distributed over the area of the bottom slab.

Design Bottom Slab Span: $l_{bslab} := 9.5 \cdot ft$

Design Bottom Slab Thickness: $t_{bslab} := 12 \cdot in$

Area of Top Slab $area_{tslab} := 130 \cdot ft^2$

Area of Bottom Slab $area_{bslab} := 130 \cdot ft^2$

Perimeter of Box Structure: $perim := 47 \cdot ft$

Design Wall Thickness: $t_{wall} := 10 \cdot in$

Design Wall Height: $h_{wall} := 7.0 \cdot ft$

Load from Fill on Top Slab:

$P_{fill} := d_{fill} \cdot \gamma_{soil} \cdot area_{tslab}$ $P_{fill} = 81.25\,kip$

Load from Truck Wheel Load on Top Slab:

$P := 16 \cdot kip$

Number of wheel loads that can be placed on tops slab: $N_P := 2$

$P_{truck} := P \cdot N_P$ $P_{truck} = 32\,kip$

Load from Top Slab Selfweight:

$P_{topslab} := t_{slab} \cdot 150 \cdot pcf \cdot area_{tslab}$ $P_{topslab} = 16.25\,kip$

Load from Wall Selfweight:

$P_{wall} := t_{wall} \cdot 150 \cdot pcf \cdot perim \cdot h_{wall}$ $P_{topslab} = 16.25\,kip$

Ignore Bottom Slab Selfweight since it will cancel itself out in the design

Total Load for soil pressure calculations:

$P_{total} := P_{fill} + P_{truck} + P_{topslab} + P_{wall}$ $P_{total} = 170.625\,kip$

Soil Pressure for Design of Bottom Slab:

$$soilpres := \frac{P_{total}}{area_{bslab}} \qquad soilpres = 1.313\,ksf$$

Positive Moment at Midspan of Bottom Slab:

$$M := \frac{soilpres \cdot 1\,ft \cdot l_{bslab}^{2}}{8} \qquad M = 14.807\,kft$$

$$M_u := 1.3M \qquad M_u = 19.249\,kft$$

Shear at End of wall:

$$V := \frac{soilpres \cdot 1\,ft \cdot l_{bslab}}{2} \qquad V = 6.234\,kip$$

$$V_u := 1.3V \qquad V_u = 8.105\,kip$$

Kimley-Horn and Associates, Inc.

Job McDowell Road Subject Structure #3 Top Slab M+ Project No. 091131012

Designed by KJK Date 06/05/06 Checked by _____ Date _____

AASHTO 17th Edition LFD R/C Beam Design

REFERENCE: AASHTO 17th Edition, 2002

Note: Input parameters are in yellow highlight. Checks for adequacy are in blue highlight with border

Base Units: ft = 1L lb = 1M sec = 1T K = 1K lbf = force

Define Units: kips := 1000·lbf degF := 1·K ksi := 1000psi

DESIGN LOCATION: TOP SLAB M+

MATERIAL PROPERTIES:

CONCRETE :

$F'c := 3 \cdot ksi$ Concrete compressive strength

$z := 130 \frac{kips}{in}$ Quantity limiting distribution of flexural reinf. [AASHTO 8.16.8.4]

$W_c := .15 \cdot \frac{kips}{ft^3}$ [UNIT FORCE -- AASHTO 3.3.6]

REINFORCING STEEL :

$f_y := 60.0 \cdot ksi$ [Grade 60]

$f_s := 24.0 \cdot ksi$ [AASHTO 8.15.2.2 SERVICE LOAD]

$E_s := 29000ksi$ [AASHTO 8.7.2]

$\phi m := .90$ Flexure - strength reduction factor [AASHTO 8.16.1.2.2]

$\phi s := .85$ Shear - strength reduction factor [AASHTO 8.16.1.2.2]

CALCULATED MATERIAL PROPERTIES:

$fc := .4 \cdot F'c$ $fc = 1.2ksi$ [SERVICE LOAD]

$E_c := W_c^{1.5} \cdot 33 \cdot \sqrt{F'c} \cdot \left(\frac{ft^3}{lbf}\right)^{1.5} \cdot \sqrt{psi}$ $E_c = 3320.56\,ksi$ Elastic Modulus for concrete [AASHTO 8.7.1]

$n := floor\left(\frac{E_s}{E_c}\right) + if\left[.5 > \left(\frac{E_s}{E_c}\right) - floor\left(\frac{E_s}{E_c}\right), 0, 1\right]$ $n = 9$ Modular Ratio [AASHTO 8.15.3.4]

$\beta_1 := if\left[F'c \le 4 \cdot ksi, .85, .85 - (F'c - 4 \cdot ksi) \cdot .05 \cdot \frac{1}{ksi}\right]$ $\beta_1 = 0.85$ FOR $F'c < 4ksi$ $\beta_1 = .85$ [AASHTO 8.16.2.7]

DESIGN LOADS:

LOAD FACTOR	SERVICE LOAD	
$Mu := 18 \cdot kips \cdot ft$	$M_{max} := 12 \cdot kips \cdot ft$	Use service load to check serviceabilty requirements
$Vu := 7 \cdot kips$	$M_{min} := 8 \cdot kips \cdot ft$	

GEOMETRY:

$b := 1 \cdot ft$ Width of compression flange $depth := .917 \cdot ft$ Gross depth of section

REINFORCING STEEL:

$cover := 2 \cdot in$ Clear cover to stirrups [AASHTO 8.22.1]

Use # $bar := 6$ **--- Moment reinforcement**

$AsNo := 2$ Total number of bars used Total Area of Reinforcing steel

$A_{bar} = 0.44\ in^2$ Bar area $As\_a := AsNo \cdot A_{bar}$

$diam_{bar} = 0.75\ in$ Bar dia. $As\_a = 0.88\ in^2$ Total area of flexure reinforcing

Use # $bar_s := 0$ **--- Shear reinforcement**

$AsNo_s := 0$ Total number of legs used Total Area of Reinforcing steel

$A_{bar_s} = 0\ in^2$ Bar area $As\_a_s := AsNo_s \cdot A_{bar_s}$

$diam_{bar_s} = 0\ in$ Bar dia. $As\_a_s = 0\ in^2$ Total area of shear reinforcing

Calc. the dc & d to tension reinf.:

$dc := cover + diam_{bar_s} + \frac{diam_{bar}}{2}$ $dc = 2.38\ in$ Distance from the tension face to centroid of first layer of tension reinf.

$d := depth - dc$ $\boxed{d = 8.63\ in}$ Distance from compression face to centroid of tension reinf.

ULTIMATE MOMENT CAPACITY: [AASHTO 8.16.3.1]

$a := As\_a \cdot \frac{f_y}{.85 \cdot F'c \cdot b}$ $a = 1.73\ in$

$\phi Mn := \phi_m \cdot \left[As\_a \cdot f_y \cdot \left(d - \frac{a}{2} \right) \right]$ $\phi Mn = 30.75\ kips \cdot ft$ > $Mu = 18.00\ kips \cdot ft$

MAX. FLEXURE REINF. [AASHTO 8.16.3.1.1]

$$\rho_{bal} := \frac{0.85 \cdot \beta_1 \cdot F'c}{f_y} \cdot \frac{87000 \cdot psi}{87000 \cdot psi + f_y} \qquad \rho_{bal} = 0.02138$$

$$\rho := \frac{As\_a}{b \cdot d} \qquad \rho = 0.0085 \qquad .75 \cdot \rho_{bal} = 0.01604 \quad > \quad \rho = 0.0085$$

MIN. FLEXURE REINF. [AASHTO 8.17.1.1]

$$Mc := \frac{b \cdot depth^2}{6} \cdot 7.5 \cdot \sqrt{psi} \cdot \sqrt{F'c} \qquad Mc = 8.29\,kips \cdot ft$$

CRACKING MOMENT on the basis of the modulus of rupture for normal weight concrete [AASHTO 8.15.2.1.1]

$$\phi Mn = 30.75\,kips \cdot ft \quad > \quad 1.2 \cdot Mc = 9.95\,kips \cdot ft$$

OR

[AASHTO 8.17.1.2] $\phi Mn = 30.75\,kips \cdot ft \quad > \quad 1.33 Mu = 23.94\,kips \cdot ft$

SERVICEABILITY REQUIREMENTS [AASHTO 8.16.8] - Use as general Check

$$k := \sqrt{2 \cdot n \cdot \rho + (n \cdot \rho)^2} - n \cdot \rho \qquad j := 1 - \frac{k}{3} \qquad k = 0.322 \qquad j = 0.8927$$

$$fs_{max} := \frac{M_{max}}{As\_a \cdot j \cdot d} \qquad fs_{min} := \frac{M_{min}}{As\_a \cdot j \cdot d} \qquad fc_{max} := fs_{max} \cdot \frac{k}{n \cdot (1 - k)}$$

$$fs_{max} = 21.24\,ksi \quad < \quad f_s = 24\,ksi$$

$$fs_{min} = 14.16\,ksi$$

$$fc_{max} = 1.12\,ksi \quad < \quad fc = 1.2\,ksi$$

FATIGUE STRESS LIMITS [AASHTO 8.16.8.3]

$rh := .3$ (r/h) of .3 is used as a default

$$f_f := 21.\cdot ksi - 0.33 \cdot fs_{min} + 8.\cdot ksi \cdot rh \qquad f_f = 18.73\,ksi \quad > \quad (fs_{max} - fs_{min}) = 7.08\,ksi$$

Max. stress range for reinf. steel

DISTRIBUTION OF FLEXURAL REINFORCEMENT [AASHTO 8.16.8.4]

$dc := if[cover > 2 \cdot in, dc - (cover - 2 \cdot in), dc]$ $\qquad dc = 2.38\,in$ $\qquad$ Use max. cover as 2"

$$A := \frac{2 \cdot dc \cdot b}{AsNo} \qquad A = 28.5\,in^2 \qquad f_{s\_z} := \frac{z}{(dc \cdot A)^{\frac{1}{3}}} \qquad f_{s\_z} = 31.9\,ksi$$

Effective tension area of conc. surrounding 1 bar
-- *formula for 1 layer of steel*

$$f_{s\_df} := if(f_{s\_z} \le .6 \cdot f_y, f_{s\_z}, .6 \cdot f_y) \qquad f_{s\_df} = 31.9\,ksi \quad > \quad fs_{max} = 21.24\,ksi$$

SHEAR STRENGTH [AASHTO 8.16.6.1.1]

$Vu_{reqd} := \frac{Vu}{\phi_s}$ $\boxed{Vu_{reqd} = 8.24\,kips}$

Shear Strength Provided by Concrete [AASHTO 8.16.6.2.1] (Assumes a rect. section)

$factor := \frac{Vu \cdot d}{Mu}$ $factor = 0.28$ $factor := if(factor > 1., 1., factor)$ $factor = 0.28$

$Fv_c := \begin{bmatrix} (1.9 \cdot \sqrt{psi} \cdot \sqrt{F'c} + 2500 \cdot psi \cdot \rho \cdot factor) \\ 2 \cdot \sqrt{psi} \cdot \sqrt{F'c} \end{bmatrix}$ $Fv_c = \begin{pmatrix} 110.01 \\ 109.54 \end{pmatrix} psi$

$Fvmax := 3.5 \cdot (\sqrt{psi} \cdot \sqrt{F'c})$ $Fvmax = 191.7\,psi$

$Fvc := if(max(Fv_c) < Fvmax, max(Fv_c), Fvmax)$ $Fvc = 110.01\,psi$ concrete shear strength

$Vc := Fvc \cdot b \cdot d$ $\boxed{Vc = 11.39\,kips}$ shear carried by concrete

IF $\boxed{Vc = 11.39\,kips}$ > $\boxed{Vu_{reqd} = 8.24\,kips}$ $\boxed{\text{No Shear reinf. required [AASHTO 8.19.1]}}$

If Shear Reinforcing is required [AASHTO 8.16.6.3]

$Vs_{reqd} := if(Vu_{reqd} - Vc < 0.\cdot kips, 0.000001 \cdot kips, Vu_{reqd} - Vc)$ $\boxed{Vs_{reqd} = 0\,kips}$

Max. shear reinf. spacing [AASHTO 8.19.1.2], AASHTO 8.19.3]

$smax := \begin{pmatrix} \frac{As\_a_s \cdot f_y}{50 \cdot psi \cdot b} \\ 24 \cdot in \\ \frac{d}{2} \end{pmatrix}$ $smax = \begin{pmatrix} 0 \\ 24 \\ 4.31 \end{pmatrix} in$ $smax := min(smax)$ $\boxed{smax = 0\,in}$

max stirrup spacing

Reduction for max spacing for high shear reinf. requirement: [AASHTO 8.16.6.3.8]

IF $\boxed{Vs_{reqd} = 0\,kips}$ > $\boxed{4 \cdot \sqrt{psi} \cdot \sqrt{F'c} \cdot b \cdot d = 22.69\,kips}$ Then reduce max. spacing by 1/2

$s_{max} := if(Vs_{reqd} > 4 \cdot \sqrt{psi} \cdot \sqrt{F'c} \cdot b \cdot d, .5 \cdot smax, smax)$ $\boxed{s_{max} = 0\,in}$

Max steel shear strength allowed: [AASHTO 8.16.6.3.9]

$\boxed{Vs_{reqd} = 0\,kips}$ < $\boxed{8 \cdot \sqrt{psi} \cdot \sqrt{F'c} \cdot b \cdot d = 45.37\,kips}$

Stirrup Spacing: [AASHTO 8.16.6.3]

$s := \frac{As\_a_s \cdot f_y \cdot d}{Vs_{reqd}}$ $s = 0\,in$

$s_{reqd} := if(s > s_{max}, s_{max}, s)$ Max. Stirrup spacing: $\boxed{s_{reqd} = 0\,in}$

CHECK CRACK CONTROL -- [AASHTO 17.6.4.7]

$d = 8.63\ in$ Distance from compression face to centroid of tension reinf.

$d_c := cover + 0.5 \cdot diam_{bar}$ Thickness of cover from tension fiber to center of tension reinf.

$\beta := 1 + \frac{d_c}{.7 \cdot (d)}$ $\beta = 1.39$ $A = 28.5\ in^2$ Effective tension area of conc. surrounding 1 bar. (1 layer of steel)

$f_s := \frac{155}{\beta \cdot \sqrt[3]{d_c \cdot A}} \cdot \frac{kip}{in}$ $fs_{ck} := if(f_s \le .6 \cdot f_y, f_s, .6 \cdot f_y)$

$fs_{ck} = 27.3\ ksi$

$f_s = 27.3\ ksi$

$\frac{fs_{ck}}{fs_{max}} = 1.29$ > 1.0

Kimley-Horn and Associates, Inc.

Job McDowell Road Subject Structure #3 Walls M- Project No. 091131012

Designed by KJK Date 05/18/06 Checked by_____ Date_____

AASHTO 17th Edition LFD R/C Beam Design

REFERENCE: AASHTO 17th Edition, 2002

Note: Input parameters are in yellow highlight. Checks for adequacy are in blue highlight with border.

Base Units: ft = 1L lb = 1M sec = 1T K= 1K lbf = force

Define Units: kips := 1000·lbf degF := 1·K ksi := 1000psi

DESIGN LOCATION: WALLS M-

MATERIAL PROPERTIES:

CONCRETE :

$F'c := 3 \cdot ksi$ Concrete compressive strength

$z := 130 \frac{kips}{in}$ Quantity limiting distribution of flexural reinf. [AASHTO 8.16.8.4]

$W_c := .15 \cdot \frac{kips}{ft^3}$ [UNIT FORCE -- AASHTO 3.3.6]

REINFORCING STEEL :

$f_y := 60.0 \cdot ksi$ [Grade 60]

$f_s := 24.0 \cdot ksi$ [AASHTO 8.15.2.2 SERVICE LOAD]

$E_s := 29000ksi$ [AASHTO 8.7.2]

$\phi_m := .90$ Flexure - strength reduction factor [AASHTO 8.16.1.2.2]

$\phi_s := .85$ Shear - strength reduction factor [AASHTO 8.16.1.2.2]

CALCULATED MATERIAL PROPERTIES:

$fc := .4 \cdot F'c$

$fc = 1.2 ksi$ [SERVICE LOAD]

$E_c := W_c^{1.5} \cdot 33 \cdot \sqrt{F'c} \cdot \left(\frac{ft^3}{lbf}\right)^{1.5} \cdot \sqrt{psi}$

$E_c = 3320.56 ksi$ Elastic Modulus for concrete [AASHTO 8.7.1]

$n := floor\left(\frac{E_s}{E_c}\right) + if\left[.5 > \left(\frac{E_s}{E_c}\right) - floor\left(\frac{E_s}{E_c}\right), 0, 1\right]$

$n = 9$ Modular Ratio [AASHTO 8.15.3.4]

$\beta_1 := if\left[F'c \le 4.\cdot ksi, .85, .85 - (F'c - 4 \cdot ksi) \cdot .05 \cdot \frac{1}{ksi}\right]$

$\beta_1 = 0.85$ FOR $F'c < 4ksi$ $\beta_1 = .85$ [AASHTO 8.16.2.7]

DESIGN LOADS:

LOAD FACTOR	SERVICE LOAD	
$Mu := 2 \cdot kips \cdot ft$	$M_{max} := 1.5 \cdot kips \cdot ft$	Use service load to check serviceabilty requirements
$Vu := 2 \cdot kips$	$M_{min} := 1.5 \cdot kips \cdot ft$	

GEOMETRY:

$b := 1 \cdot ft$ Width of compression flange $\quad$ $depth := .833 \cdot ft$ Gross depth of section

REINFORCING STEEL:

$cover := 2 \cdot in$ Clear cover to stirrups [AASHTO 8.22.1]

Use # $bar := 6$ **--- Moment reinforcement**

$AsNo := 1$ Total number of bars used $\quad$ Total Area of Reinforcing steel

$A_{bar} = 0.44\ in^2$ Bar area $\quad$ $As\_a := AsNo \cdot A_{bar}$

$diam_{bar} = 0.75\ in$ Bar dia. $\quad$ $As\_a = 0.44\ in^2$ Total area of flexure reinforcing

Use # $bar_s := 0$ **--- Shear reinforcement**

$AsNo_s := 0$ Total number of legs used $\quad$ Total Area of Reinforcing steel

$A_{bar_s} = 0\ in^2$ Bar area $\quad$ $As\_a_s := AsNo_s \cdot A_{bar_s}$

$diam_{bar_s} = 0\ in$ Bar dia. $\quad$ $As\_a_s = 0\ in^2$ Total area of shear reinforcing

Calc. the dc & d to tension reinf.:

$dc := cover + diam_{bar_s} + \frac{diam_{bar}}{2}$ $\quad$ $dc = 2.38\ in$ $\quad$ Distance from the tension face to centroid of first layer of tension reinf.

$d := depth - dc$ $\quad$ $d = 7.62\ in$ $\quad$ Distance from compression face to centroid of tension reinf.

ULTIMATE MOMENT CAPACITY: [AASHTO 8.16.3.1]

$a := As\_a \cdot \frac{f_y}{.85 \cdot F'c \cdot b}$ $\quad$ $a = 0.86\ in$

$\phi Mn := \phi_m \cdot \left[As\_a \cdot f_y \cdot \left(d - \frac{a}{2} \right) \right]$ $\quad$ $\phi Mn = 14.24\ kips \cdot ft$ $>$ $Mu = 2.00\ kips \cdot ft$

MAX. FLEXURE REINF. [AASHTO 8.16.3.1.1]

$$\rho_{bal} := \frac{0.85 \cdot \beta_1 \cdot F'c}{f_y} \cdot \frac{87000 \cdot psi}{87000 \cdot psi + f_y} \qquad \rho_{bal} = 0.02138$$

$$\rho := \frac{As\_a}{b \cdot d} \qquad \rho = 0.00481$$

$.75 \cdot \rho_{bal} = 0.01604$ > $\rho = 0.00481$ ✓

MIN. FLEXURE REINF. [AASHTO 8.17.1.1]

$$Mc := \frac{b \cdot depth^2}{6} \cdot 7.5 \cdot \sqrt{psi} \cdot \sqrt{F'c} \qquad Mc = 6.84\,kips \cdot ft$$

CRACKING MOMENT *on the basis of* the modulus of rupture for normal weight concrete [AASHTO 8.15.2.1.1]

$\phi Mn = 14.24\,kips \cdot ft$ > $1.2 \cdot Mc = 8.21\,kips \cdot ft$ ✓

OR

[AASHTO 8.17.1.2] $\phi Mn = 14.24\,kips \cdot ft$ > $1.33 Mu = 2.66\,kips \cdot ft$ ✓

SERVICEABILITY REQUIREMENTS [AASHTO 8.16.8] - Use as general Check

$$k := \sqrt{2 \cdot n \cdot \rho + (n \cdot \rho)^2} - n \cdot \rho \qquad j := 1 - \frac{k}{3} \qquad k = 0.2542$$

$$j = 0.9153$$

$$fs_{max} := \frac{M_{max}}{As\_a \cdot j \cdot d} \qquad fs_{min} := \frac{M_{min}}{As\_a \cdot j \cdot d} \qquad fc_{max} := fs_{max} \cdot \frac{k}{n \cdot (1 - k)}$$

$fs_{max} = 5.86\,ksi$ < $f_s = 24\,ksi$ ✓

$fs_{min} = 5.86\,ksi$

$fc_{max} = 0.22\,ksi$ < $fc = 1.2\,ksi$ ✓

FATIGUE STRESS LIMITS [AASHTO 8.16.8.3]

$rh := .3$ (r/h) of .3 is used as a default

$f_f := 21.\cdot ksi - 0.33 \cdot fs_{min} + 8.\cdot ksi \cdot rh$ $\qquad f_f = 21.46\,ksi$ > $(fs_{max} - fs_{min}) = 0\,ksi$ ✓

Max. stress range for reinf. steel

DISTRIBUTION OF FLEXURAL REINFORCEMENT [AASHTO 8.16.8.4]

$dc := if[cover > 2 \cdot in, dc - (cover - 2 \cdot in), dc]$ $\qquad dc = 2.38\,in$ $\qquad$ Use max. cover as 2"

$$A := \frac{2 \cdot dc \cdot b}{AsNo} \qquad A = 57\,in^2 \qquad f_{s\_z} := \frac{z}{(dc \cdot A)^{\frac{1}{3}}} \qquad f_{s\_z} = 25.32\,ksi$$

Effective tension area of conc. surrounding 1 bar
-- formula for 1 layer of steel

$f_{s\_df} := if(f_{s\_z} \le .6 \cdot f_y, f_{s\_z}, .6 \cdot f_y)$ $\qquad f_{s\_df} = 25.32\,ksi$ > $fs_{max} = 5.86\,ksi$ ✓

SHEAR STRENGTH [AASHTO 8.16.6.1.1]

$Vu_{reqd} := \frac{Vu}{\phi_s}$ $\boxed{Vu_{reqd} = 2.35\,kips}$

Shear Strength Provided by Concrete [AASHTO 8.16.6.2.1] (Assumes a rect. section)

$factor := \frac{Vu \cdot d}{Mu}$ $factor = 0.64$ $factor := if(factor > 1., 1., factor)$ $factor = 0.64$

$Fv_c := \begin{bmatrix} (1.9 \cdot \sqrt{psi} \cdot \sqrt{F'c} + 2500 \cdot psi \cdot \rho \cdot factor) \\ 2 \cdot \sqrt{psi} \cdot \sqrt{F'c} \end{bmatrix}$ $Fv_c = \begin{pmatrix} 111.71 \\ 109.54 \end{pmatrix} psi$

$Fvmax := 3.5 \cdot (\sqrt{psi} \cdot \sqrt{F'c})$ $Fvmax = 191.7\,psi$

$Fvc := if(max(Fv_c) < Fvmax, max(Fv_c), Fvmax)$ $Fvc = 111.71\,psi$ concrete shear strength

$Vc := Fvc \cdot b \cdot d$ $\boxed{Vc = 10.22\,kips}$ shear carried by concrete

IF $\boxed{Vc = 10.22\,kips}$ > $\boxed{Vu_{reqd} = 2.35\,kips}$ $\boxed{\text{No Shear reinf. required [AASHTO 8.19.1]}}$

If Shear Reinforcing is required [AASHTO 8.16.6.3]

$Vs_{reqd} := if(Vu_{reqd} - Vc < 0. \cdot kips, 0.000001 \cdot kips, Vu_{reqd} - Vc)$ $\boxed{Vs_{reqd} = 0\,kips}$

Max. shear reinf. spacing [AASHTO 8.19.1.2], AASHTO 8.19.3]

$smax := \begin{pmatrix} \frac{As\_a_s \cdot f_y}{50 \cdot psi \cdot b} \\ 24 \cdot in \\ \frac{d}{2} \end{pmatrix}$ $smax = \begin{pmatrix} 0 \\ 24 \\ 3.81 \end{pmatrix} in$ $smax := min(smax)$ $\boxed{smax = 0\,in}$

max stirrup spacing

Reduction for max spacing for high shear reinf. requirement: [AASHTO 8.16.6.3.8]

IF $\boxed{Vs_{reqd} = 0\,kips}$ > $\boxed{4 \cdot \sqrt{psi} \cdot \sqrt{F'c} \cdot b \cdot d = 20.04\,kips}$ Then reduce max. spacing by 1/2

$s_{max} := if(Vs_{reqd} > 4 \cdot \sqrt{psi} \cdot \sqrt{F'c} \cdot b \cdot d, .5 \cdot smax, smax)$ $\boxed{s_{max} = 0\,in}$

Max steel shear strength allowed: [AASHTO 8.16.6.3.9]

$\boxed{Vs_{reqd} = 0\,kips}$ < $\boxed{8 \cdot \sqrt{psi} \cdot \sqrt{F'c} \cdot b \cdot d = 40.07\,kips}$ ✓

Stirrup Spacing: [AASHTO 8.16.6.3]

$s := \frac{As\_a_s \cdot f_y \cdot d}{Vs_{reqd}}$ $s = 0\,in$

$s_{reqd} := if(s > s_{max}, s_{max}, s)$ Max. Stirrup spacing: $\boxed{s_{reqd} = 0\,in}$ ✓

CHECK CRACK CONTROL -- [AASHTO 17.6.4.7]

$d = 7.62\,in$ Distance from compression face to centroid of tension reinf.

$d_c := cover + 0.5 \cdot diam_{bar}$ Thickness of cover from tension fiber to center of tension reinf.

$\beta := 1 + \frac{d_c}{.7 \cdot (d)}$ $\beta = 1.45$ $A = 57\,in^2$ Effective tension area of conc. surrounding 1 bar. (1 layer of steel)

$f_s := \frac{155}{\beta \cdot \sqrt[3]{d_c \cdot A}} \cdot \frac{kip}{in}$

$fs_{ck} := if(f_s \le .6 \cdot f_y, f_s, .6 \cdot f_y)$

$fs_{ck} = 20.89\,ksi$

$f_s = 20.89\,ksi$

$\frac{fs_{ck}}{fs_{max}} = 3.56$ > 1.0 ✓

Kimley-Horn and Associates, Inc.

Job McDowell Road Subject Structure #3 Walls M+ Project No. 091131012

Designed by KJK Date 05/18/06 Checked by_____ Date_____

AASHTO 17th Edition LFD R/C Beam Design

REFERENCE: AASHTO 17th Edition, 2002

Note: Input parameters are in yellow highlight. Checks for adequacy are in blue highlight with border

Base Units: ft = 1L lb = 1M sec = 1T K = 1K lbf = force

Define Units: kips := 1000·lbf degF := 1·K ksi := 1000psi

DESIGN LOCATION: WALLS M+

MATERIAL PROPERTIES:

CONCRETE :

$F'c := 3\,ksi$ Concrete compressive strength

$z := 130\,\frac{kips}{in}$ Quantity limiting distribution of flexural reinf. [AASHTO 8.16.8.4]

$W_c := .15\cdot\frac{kips}{ft^3}$ [UNIT FORCE -- AASHTO 3.3.6]

REINFORCING STEEL :

$f_y := 60.0\cdot ksi$ [Grade 60]

$f_s := 24.0\cdot ksi$ [AASHTO 8.15.2.2 SERVICE LOAD]

$E_s := 29000ksi$ [AASHTO 8.7.2]

$\phi_m := .90$ Flexure - strength reduction factor [AASHTO 8.16.1.2.2]

$\phi_s := .85$ Shear - strength reduction factor [AASHTO 8.16.1.2.2]

CALCULATED MATERIAL PROPERTIES:

$fc := .4\cdot F'c$ $\boxed{fc = 1.2\,ksi}$ [SERVICE LOAD]

$E_c := W_c^{1.5}\cdot 33\cdot\sqrt{F'c}\cdot\left(\frac{ft^3}{lbf}\right)^{1.5}\cdot\sqrt{psi}$ $\boxed{E_c = 3320.56\,ksi}$ Elastic Modulus for concrete [AASHTO 8.7.1]

$n := floor\left(\frac{E_s}{E_c}\right) + if\left[.5 > \left(\frac{E_s}{E_c}\right) - floor\left(\frac{E_s}{E_c}\right), 0, 1\right]$ $\boxed{n = 9}$ Modular Ratio [AASHTO 8.15.3.4]

$\beta_1 := if\left[F'c \le 4.\cdot ksi, .85, .85 - (F'c - 4\cdot ksi)\cdot .05\cdot\frac{1}{ksi}\right]$ $\boxed{\beta_1 = 0.85}$ FOR F'c < 4ksi β_1 = .85 [AASHTO 8.16.2.7]

DESIGN LOADS:

LOAD FACTOR	SERVICE LOAD	
$Mu := 1.5 \cdot kips \cdot ft$	$M_{max} := 1 \cdot kips \cdot ft$	Use service load to check serviceabilty requirements
$Vu := 2 \cdot kips$	$M_{min} := 1 \cdot kips \cdot ft$	

GEOMETRY:

$b := 1 \cdot ft$ Width of compression flange $depth := .833 \cdot ft$ Gross depth of section

REINFORCING STEEL:

$cover := 2 \cdot in$ Clear cover to stirrups [AASHTO 8.22.1]

Use # $bar := 6$ **--- Moment reinforcement**

$AsNo := 1$ Total number of bars used Total Area of Reinforcing steel

$A_{bar} = 0.44\ in^2$ Bar area $As\_a := AsNo \cdot A_{bar}$

$diam_{bar} = 0.75\ in$ Bar dia. $As\_a = 0.44\ in^2$ Total area of flexure reinforcing

Use # $bar_s := 0$ **--- Shear reinforcement**

$AsNo_s := 0$ Total number of legs used Total Area of Reinforcing steel

$A_{bar_s} = 0\ in^2$ Bar area $As\_a_s := AsNo_s \cdot A_{bar_s}$

$diam_{bar_s} = 0\ in$ Bar dia. $As\_a_s = 0\ in^2$ Total area of shear reinforcing

Calc. the dc & d to tension reinf.:

$dc := cover + diam_{bar_s} + \frac{diam_{bar}}{2}$ $dc = 2.38\ in$ Distance from the tension face to centroid of first layer of tension reinf.

$d := depth - dc$ $d = 7.62\ in$ Distance from compression face to centroid of tension reinf.

ULTIMATE MOMENT CAPACITY: [AASHTO 8.16.3.1]

$a := As\_a \cdot \frac{f_y}{.85 \cdot F'c \cdot b}$ $a = 0.86\ in$

$\phi Mn := \phi_m \cdot \left[As\_a \cdot f_y \cdot \left(d - \frac{a}{2} \right) \right]$ $\phi Mn = 14.24\ kips \cdot ft$ > $Mu = 1.50\ kips \cdot ft$

MAX. FLEXURE REINF. [AASHTO 8.16.3.1.1]

$$\rho_{bal} := \frac{0.85 \cdot \beta_1 \cdot F'c}{f_y} \cdot \frac{87000 \cdot psi}{87000 \cdot psi + f_y} \qquad \rho_{bal} = 0.02138$$

$$\rho := \frac{As\_a}{b \cdot d} \qquad \rho = 0.00481$$

$.75 \cdot \rho_{bal} = 0.01604$ > $\rho = 0.00481$ ✓

MIN. FLEXURE REINF. [AASHTO 8.17.1.1]

$$Mc := \frac{b \cdot depth^2}{6} \cdot 7.5 \cdot \sqrt{psi} \cdot \sqrt{F'c} \qquad Mc = 6.84\,kips \cdot ft$$

CRACKING MOMENT on the basis of the modulus of rupture for normal weight concrete [AASHTO 8.15.2.1.1]

$\phi Mn = 14.24\,kips \cdot ft$ > $1.2 \cdot Mc = 8.21\,kips \cdot ft$ ✓

OR

[AASHTO 8.17.1.2] $\phi Mn = 14.24\,kips \cdot ft$ > $1.33 Mu = 2\,kips \cdot ft$ ✓

SERVICEABILITY REQUIREMENTS [AASHTO 8.16.8] - Use as general Check

$$k := \sqrt{2 \cdot n \cdot \rho + (n \cdot \rho)^2} - n \cdot \rho \qquad j := 1 - \frac{k}{3} \qquad k = 0.2542$$

$$j = 0.9153$$

$$fs_{max} := \frac{M_{max}}{As\_a \cdot j \cdot d} \qquad fs_{min} := \frac{M_{min}}{As\_a \cdot j \cdot d} \qquad fc_{max} := fs_{max} \cdot \frac{k}{n \cdot (1 - k)}$$

$fs_{max} = 3.91\,ksi$ < $f_s = 24\,ksi$ ✓

$fs_{min} = 3.91\,ksi$

$fc_{max} = 0.15\,ksi$ < $fc = 1.2\,ksi$ ✓

FATIGUE STRESS LIMITS [AASHTO 8.16.8.3]

$rh := .3$ (r/h) of .3 is used as a default

$f_f := 21.\cdot ksi - 0.33 \cdot fs_{min} + 8.\cdot ksi \cdot rh$ $\qquad f_f = 22.11\,ksi$ > $(fs_{max} - fs_{min}) = 0\,ksi$ ✓

Max. stress range for reinf. steel

DISTRIBUTION OF FLEXURAL REINFORCEMENT [AASHTO 8.16.8.4]

$dc := if[cover > 2 \cdot in, dc - (cover - 2 \cdot in), dc]$ $\qquad dc = 2.38\,in$ $\qquad$ Use max. cover as 2"

$$A := \frac{2 \cdot dc \cdot b}{AsNo} \qquad A = 57\,in^2 \qquad f_{s\_z} := \frac{z}{(dc \cdot A)^{\frac{1}{3}}} \qquad f_{s\_z} = 25.32\,ksi$$

Effective tension area of conc. surrounding 1 bar
-- formula for 1 layer of steel

$f_{s\_df} := if(f_{s\_z} \le .6 \cdot f_y, f_{s\_z}, .6 \cdot f_y)$ $\qquad f_{s\_df} = 25.32\,ksi$ > $fs_{max} = 3.91\,ksi$ ✓

SHEAR STRENGTH [AASHTO 8.16.6.1.1]

$Vu_{reqd} := \frac{Vu}{\phi_s}$ $\boxed{Vu_{reqd} = 2.35\,kips}$

Shear Strength Provided by Concrete [AASHTO 8.16.6.2.1] (Assumes a rect. section)

$factor := \frac{Vu \cdot d}{Mu}$ $factor = 0.85$ $factor := if(factor > 1., 1., factor)$ $factor = 0.85$

$Fv_c := \begin{bmatrix} (1.9 \cdot \sqrt{psi} \cdot \sqrt{F'c} + 2500 \cdot psi \cdot \rho \cdot factor) \\ 2 \cdot \sqrt{psi} \cdot \sqrt{F'c} \end{bmatrix}$ $Fv_c = \begin{pmatrix} 114.25 \\ 109.54 \end{pmatrix} psi$

$Fvmax := 3.5 \cdot (\sqrt{psi} \cdot \sqrt{F'c})$ $Fvmax = 191.7\,psi$

$Fvc := if(max(Fv_c) < Fvmax, max(Fv_c), Fvmax)$ $Fvc = 114.25\,psi$ concrete shear strength

$Vc := Fvc \cdot b \cdot d$ $\boxed{Vc = 10.45\,kips}$ shear carried by concrete

IF $\boxed{Vc = 10.45\,kips}$ > $\boxed{Vu_{reqd} = 2.35\,kips}$ $\boxed{\text{No Shear reinf. required [AASHTO 8.19.1]}}$

If Shear Reinforcing is required [AASHTO 8.16.6.3]

$Vs_{reqd} := if(Vu_{reqd} - Vc < 0. \cdot kips, 0.000001 \cdot kips, Vu_{reqd} - Vc)$ $\boxed{Vs_{reqd} = 0\,kips}$

Max. shear reinf. spacing [AASHTO 8.19.1.2], AASHTO 8.19.3]

$smax := \begin{pmatrix} \frac{As\_a_s \cdot f_y}{50 \cdot psi \cdot b} \\ 24 \cdot in \\ \frac{d}{2} \end{pmatrix}$ $smax = \begin{pmatrix} 0 \\ 24 \\ 3.81 \end{pmatrix} in$ $smax := min(smax)$ $\boxed{smax = 0\,in}$

max stirrup spacing

Reduction for max spacing for high shear reinf. requirement: [AASHTO 8.16.6.3.8]

IF $\boxed{Vs_{reqd} = 0\,kips}$ > $\boxed{4 \cdot \sqrt{psi} \cdot \sqrt{F'c} \cdot b \cdot d = 20.04\,kips}$ Then reduce max. spacing by 1/2

$s_{max} := if(Vs_{reqd} > 4 \cdot \sqrt{psi} \cdot \sqrt{F'c} \cdot b \cdot d, .5 \cdot smax, smax)$ $\boxed{s_{max} = 0\,in}$

Max steel shear strength allowed: [AASHTO 8.16.6.3.9]

$\boxed{Vs_{reqd} = 0\,kips}$ < $\boxed{8 \cdot \sqrt{psi} \cdot \sqrt{F'c} \cdot b \cdot d = 40.07\,kips}$ ✓

Stirrup Spacing: [AASHTO 8.16.6.3]

$s := \frac{As\_a_s \cdot f_y \cdot d}{Vs_{reqd}}$ $s = 0\,in$

$s_{reqd} := if(s > s_{max}, s_{max}, s)$ Max. Stirrup spacing: $\boxed{s_{reqd} = 0\,in}$ ✓

CHECK CRACK CONTROL -- [AASHTO 17.6.4.7]

$d = 7.62\,in$ Distance from compression face to centroid of tension reinf.

$d_c := cover + 0.5 \cdot diam_{bar}$ Thickness of cover from tension fiber to center of tension reinf.

$\beta := 1 + \frac{d_c}{.7 \cdot (d)}$ $\beta = 1.45$ $A = 57\,in^2$ Effective tension area of conc. surrounding 1 bar. (1 layer of steel)

$f_s := \frac{155}{\beta \cdot \sqrt[3]{d_c \cdot A}} \cdot \frac{kip}{in}$

$fs_{ck} := if(f_s \le .6 \cdot f_y, f_s, .6 \cdot f_y)$

$fs_{ck} = 20.89\,ksi$

$f_s = 20.89\,ksi$

$\frac{fs_{ck}}{fs_{max}} = 5.34$ > 1.0 ✓

Kimley-Horn and Associates, Inc.

Job McDowell Road Subject Structure #3 Btm Slab M+ Project No. 091131012

Designed by KJK Date 06/05/06 Checked by_____ Date_____

AASHTO 17th Edition LFD R/C Beam Design

REFERENCE: AASHTO 17th Edition, 2002

Note: Input parameters are in yellow highlight. Checks for adequacy are in blue highlight with border

Base Units: ft = 1L lb = 1M sec = 1T K = 1K lbf = force

Define Units: kips := 1000·lbf degF := 1·K ksi := 1000psi

DESIGN LOCATION: BTM SLAB M+

MATERIAL PROPERTIES:

CONCRETE :

$F'c := 3 \cdot ksi$ Concrete compressive strength

$z := 130 \frac{kips}{in}$ Quantity limiting distribution of flexural reinf. [AASHTO 8.16.8.4]

$W_c := .15 \cdot \frac{kips}{ft^3}$ [UNIT FORCE -- AASHTO 3.3.6]

REINFORCING STEEL :

$f_y := 60.0 \cdot ksi$ [Grade 60]

$f_s := 24.0 \cdot ksi$ [AASHTO 8.15.2.2 SERVICE LOAD]

$E_s := 29000ksi$ [AASHTO 8.7.2]

$\phi_m := .90$ Flexure - strength reduction factor [AASHTO 8.16.1.2.2]

$\phi_s := .85$ Shear - strength reduction factor [AASHTO 8.16.1.2.2]

CALCULATED MATERIAL PROPERTIES:

$fc := .4 \cdot F'c$

$\boxed{fc = 1.2ksi}$ [SERVICE LOAD]

$E_c := W_c^{1.5} \cdot 33 \cdot \sqrt{F'c} \cdot \left(\frac{ft^3}{lbf}\right)^{1.5} \cdot \sqrt{psi}$

$\boxed{E_c = 3320.56\,ksi}$ Elastic Modulus for concrete [AASHTO 8.7.1]

$n := floor\left(\frac{E_s}{E_c}\right) + if\left[.5 > \left(\frac{E_s}{E_c}\right) - floor\left(\frac{E_s}{E_c}\right), 0, 1\right]$

$\boxed{n = 9}$ Modular Ratio [AASHTO 8.15.3.4]

$\beta_1 := if\left[F'c \le 4. \cdot ksi, .85, .85 - (F'c - 4 \cdot ksi) \cdot .05 \cdot \frac{1}{ksi}\right]$

$\boxed{\beta_1 = 0.85}$ FOR $F'c < 4ksi$ $\beta_1 = .85$ [AASHTO 8.16.2.7]

DESIGN LOADS:

LOAD FACTOR	SERVICE LOAD	
$Mu := 20 \cdot kips \cdot ft$	$M_{max} := 15 \cdot kips \cdot ft$	Use service load to check serviceabilty requirements
$Vu := 8 \cdot kips$	$M_{min} := 15 \cdot kips \cdot ft$	

GEOMETRY:

$b := 1 \cdot ft$ Width of compression flange $depth := 1.0 \cdot ft$ Gross depth of section

REINFORCING STEEL:

$cover := 2 \cdot in$ Clear cover to stirrups [AASHTO 8.22.1]

Use # $bar := 6$ **--- Moment reinforcement**

$AsNo := 2$ Total number of bars used Total Area of Reinforcing steel

$A_{bar} = 0.44\ in^2$ Bar area $As\_a := AsNo \cdot A_{bar}$

$diam_{bar} = 0.75\ in$ Bar dia. $As\_a = 0.88\ in^2$ Total area of flexure reinforcing

Use # $bar_s := 0$ **--- Shear reinforcement**

$AsNo_s := 0$ Total number of legs used Total Area of Reinforcing steel

$A_{bar_s} = 0\ in^2$ Bar area $As\_a_s := AsNo_s \cdot A_{bar_s}$

$diam_{bar_s} = 0\ in$ Bar dia. $As\_a_s = 0\ in^2$ Total area of shear reinforcing

Calc. the dc & d to tension reinf.:

$dc := cover + diam_{bar_s} + \frac{diam_{bar}}{2}$ $dc = 2.38\ in$ Distance from the tension face to centroid of first layer of tension reinf.

$d := depth - dc$ $d = 9.62\ in$ Distance from compression face to centroid of tension reinf.

ULTIMATE MOMENT CAPACITY: [AASHTO 8.16.3.1]

$a := As\_a \cdot \frac{f_y}{.85 \cdot F'c \cdot b}$ $a = 1.73\ in$

$\phi Mn := \phi_m \cdot \left[As\_a \cdot f_y \cdot \left(d - \frac{a}{2} \right) \right]$ $\phi Mn = 34.7\ kips \cdot ft$ > $Mu = 20.00\ kips \cdot ft$

MAX. FLEXURE REINF. [AASHTO 8.16.3.1.1]

$$\rho_{bal} := \frac{0.85 \cdot \beta_1 \cdot F'c}{f_y} \cdot \frac{87000 \cdot psi}{87000 \cdot psi + f_y} \qquad \rho_{bal} = 0.02138$$

$$\rho := \frac{As\_a}{b \cdot d} \qquad \rho = 0.00762 \qquad .75 \cdot \rho_{bal} = 0.01604 \quad > \quad \rho = 0.00762$$

MIN. FLEXURE REINF. [AASHTO 8.17.1.1]

$$Mc := \frac{b \cdot depth^2}{6} \cdot 7.5 \cdot \sqrt{psi} \cdot \sqrt{F'c} \qquad Mc = 9.86\,kips \cdot ft$$

CRACKING MOMENT on the basis of the modulus of rupture for normal weight concrete [AASHTO 8.15.2.1.1]

$$\phi Mn = 34.7\,kips \cdot ft \quad > \quad 1.2 \cdot Mc = 11.83\,kips \cdot ft$$

OR

[AASHTO 8.17.1.2] $\phi Mn = 34.7\,kips \cdot ft \quad > \quad 1.33 Mu = 26.6\,kips \cdot ft$

SERVICEABILITY REQUIREMENTS [AASHTO 8.16.8] - Use as general Check

$$k := \sqrt{2 \cdot n \cdot \rho + (n \cdot \rho)^2} - n \cdot \rho \qquad j := 1 - \frac{k}{3} \qquad k = 0.3081 \qquad j = 0.8973$$

$$fs_{max} := \frac{M_{max}}{As\_a \cdot j \cdot d} \qquad fs_{min} := \frac{M_{min}}{As\_a \cdot j \cdot d} \qquad fc_{max} := fs_{max} \cdot \frac{k}{n \cdot (1 - k)}$$

$$fs_{max} = 23.68\,ksi \quad < \quad f_s = 24\,ksi$$

$$fs_{min} = 23.68\,ksi$$

$$fc_{max} = 1.17\,ksi \quad < \quad fc = 1.2\,ksi$$

FATIGUE STRESS LIMITS [AASHTO 8.16.8.3]

$rh := .3$ (r/h) of .3 is used as a default

$$f_f := 21.\cdot ksi - 0.33 \cdot fs_{min} + 8.\cdot ksi \cdot rh \qquad f_f = 15.58\,ksi \quad > \quad (fs_{max} - fs_{min}) = 0\,ksi$$

Max. stress range for reinf. steel

DISTRIBUTION OF FLEXURAL REINFORCEMENT [AASHTO 8.16.8.4]

$dc := if[cover > 2 \cdot in, dc - (cover - 2 \cdot in), dc]$ $\qquad dc = 2.38\,in$ $\qquad$ Use max. cover as 2"

$$A := \frac{2 \cdot dc \cdot b}{AsNo} \qquad A = 28.5\,in^2 \qquad f_{s\_z} := \frac{z}{(dc \cdot A)^{\frac{1}{3}}} \qquad f_{s\_z} = 31.9\,ksi$$

Effective tension area of conc. surrounding 1 bar
-- formula for 1 layer of steel

$$f_{s\_df} := if(f_{s\_z} \le .6 \cdot f_y, f_{s\_z}, .6 \cdot f_y) \qquad f_{s\_df} = 31.9\,ksi \quad > \quad fs_{max} = 23.68\,ksi$$

SHEAR STRENGTH [AASHTO 8.16.6.1.1]

$Vu_{reqd} := \frac{Vu}{\phi_s}$ $\boxed{Vu_{reqd} = 9.41\,kips}$

Shear Strength Provided by Concrete [AASHTO 8.16.6.2.1] (Assumes a rect. section)

$factor := \frac{Vu \cdot d}{Mu}$ $factor = 0.32$ $factor := if(factor > 1., 1., factor)$ $factor = 0.32$

$Fv_c := \begin{bmatrix} (1.9 \cdot \sqrt{psi} \cdot \sqrt{F'c} + 2500 \cdot psi \cdot \rho \cdot factor) \\ 2 \cdot \sqrt{psi} \cdot \sqrt{F'c} \end{bmatrix}$ $Fv_c = \begin{pmatrix} 110.18 \\ 109.54 \end{pmatrix} psi$

$Fvmax := 3.5 \cdot (\sqrt{psi} \cdot \sqrt{F'c})$ $Fvmax = 191.7\,psi$

$Fvc := if(max(Fv_c) < Fvmax, max(Fv_c), Fvmax)$ $Fvc = 110.18\,psi$ concrete shear strength

$Vc := Fvc \cdot b \cdot d$ $\boxed{Vc = 12.73\,kips}$ shear carried by concrete

IF $\boxed{Vc = 12.73\,kips}$ > $\boxed{Vu_{reqd} = 9.41\,kips}$ $\boxed{\text{No Shear reinf. required [AASHTO 8.19.1]}}$

If Shear Reinforcing is required [AASHTO 8.16.6.3]

$Vs_{reqd} := if(Vu_{reqd} - Vc < 0. \cdot kips, 0.000001 \cdot kips, Vu_{reqd} - Vc)$ $\boxed{Vs_{reqd} = 0\,kips}$

Max. shear reinf. spacing [AASHTO 8.19.1.2], AASHTO 8.19.3]

$smax := \begin{pmatrix} \frac{As\_a_s \cdot f_y}{50 \cdot psi \cdot b} \\ 24 \cdot in \\ \frac{d}{2} \end{pmatrix}$ $smax = \begin{pmatrix} 0 \\ 24 \\ 4.81 \end{pmatrix} in$ $smax := min(smax)$ $\boxed{smax = 0\,in}$

max stirrup spacing

Reduction for max spacing for high shear reinf. requirement: [AASHTO 8.16.6.3.8]

IF $\boxed{Vs_{reqd} = 0\,kips}$ > $\boxed{4 \cdot \sqrt{psi} \cdot \sqrt{F'c} \cdot b \cdot d = 25.3\,kips}$ Then reduce max. spacing by 1/2

$s_{max} := if(Vs_{reqd} > 4 \cdot \sqrt{psi} \cdot \sqrt{F'c} \cdot b \cdot d, .5 \cdot smax, smax)$ $\boxed{s_{max} = 0\,in}$

Max steel shear strength allowed: [AASHTO 8.16.6.3.9]

$\boxed{Vs_{reqd} = 0\,kips}$ < $\boxed{8 \cdot \sqrt{psi} \cdot \sqrt{F'c} \cdot b \cdot d = 50.61\,kips}$

Stirrup Spacing: [AASHTO 8.16.6.3]

$s := \frac{As\_a_s \cdot f_y \cdot d}{Vs_{reqd}}$ $s = 0\,in$

$s_{reqd} := if(s > s_{max}, s_{max}, s)$ Max. Stirrup spacing: $\boxed{s_{reqd} = 0\,in}$

CHECK CRACK CONTROL -- [AASHTO 17.6.4.7]

$d = 9.62\,in$ Distance from compression face to centroid of tension reinf.

$d_c := cover + 0.5 \cdot diam_{bar}$ Thickness of cover from tension fiber to center of tension reinf.

$\beta := 1 + \frac{d_c}{.7 \cdot (d)}$ $\beta = 1.35$ $A = 28.5\,in^2$ Effective tension area of conc. surrounding 1 bar. (1 layer of steel)

$f_s := \frac{155}{\beta \cdot \sqrt[3]{d_c \cdot A}} \cdot \frac{kip}{in}$ $fs_{ck} := if(f_s \le .6 \cdot f_y, f_s, .6 \cdot f_y)$

$f_s = 28.12\,ksi$ $fs_{ck} = 28.12\,ksi$ $\frac{fs_{ck}}{fs_{max}} = 1.19$ > 1.0

STRUCTURE #4

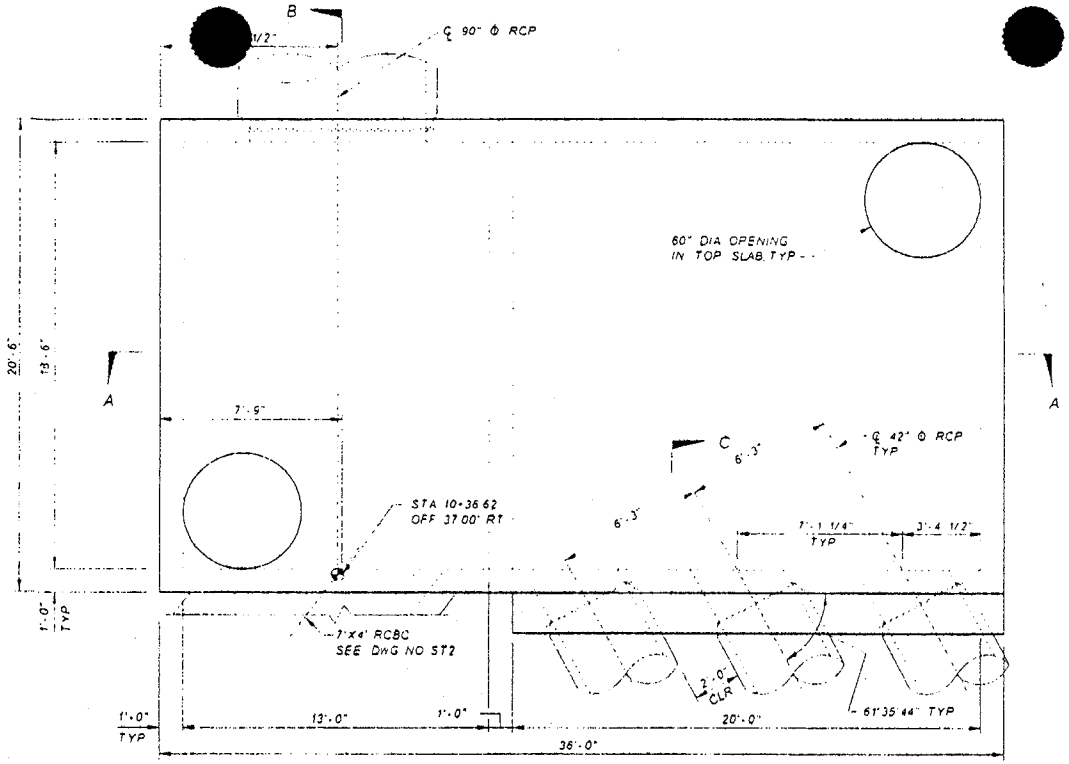

TOP PLAN
SCALE = 3/8" = 1'-0"

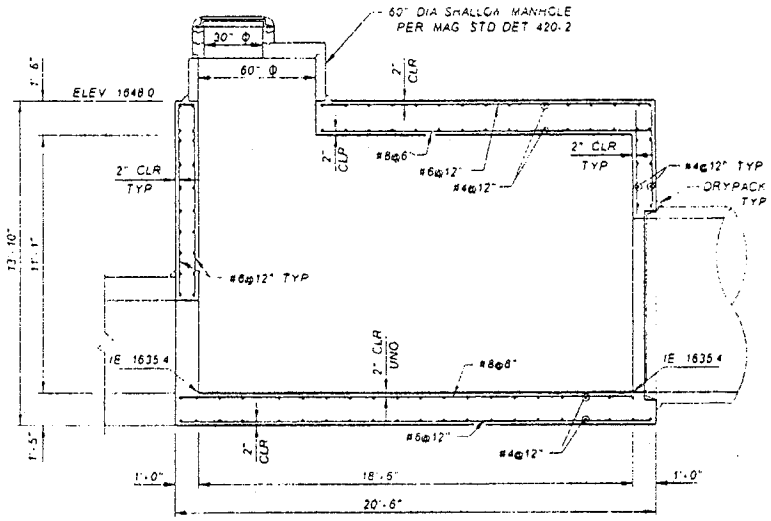

SECTION B-B
SCALE = 3/8" = 1'-0"

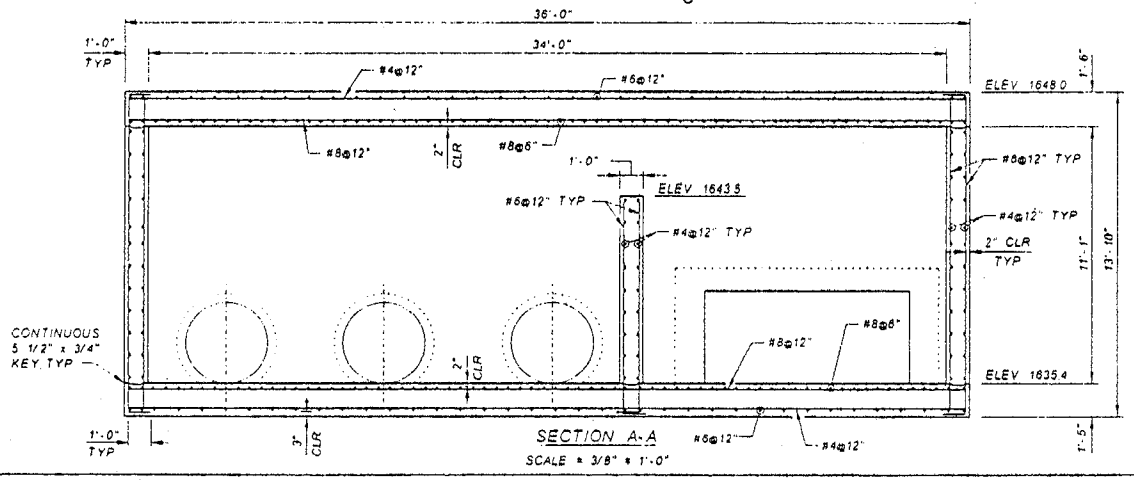

SECTION A-A
SCALE = 3/8" = 1'-0"

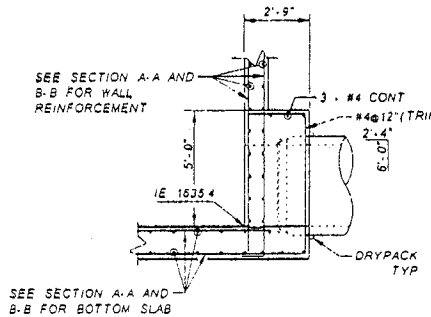

SECTION C-C
SCALE = 3/8" = 1'-0"

NO	REVISION	BY	DATE
3			
2			
1			

FLOOD CONTROL DISTRICT OF MARICOPA COUNTY
ENGINEERING DIVISION

MCDOWELL ROAD BASIN
AND STORM DRAIN PROJECT
PCN 420.03.31

	BY	DATE
DESIGNED	SMN	10/04/06
DRAWN	MSK	10/04/06
CHECKED	KJK/DJL	10/04/06

Kimley-Horn and Associates, Inc

DRAWING NO. ST5 | STRUCTURE #4 | SHEET 47 OF 74

Concrete Box Member Design Forces: STRUCTURE 4

Wall Information (Assumes design as a slab partiall fixed at the top and bottom slabs):

Wall Height: $h_{wall} := 11.08 \cdot ft$

Top Slab Thickness: $t_{tslab} := 1.5 \cdot ft$

Depth of Fill: $d_{fill} := 1.5 \cdot ft$

Height from btm wall to top of fill: $H := h_{wall} + t_{tslab} + d_{fill}$ $H = 14.08\ ft$

Per Geotechnical Report lateral load on walls is a uniform pressure since walls are restrained from moving.

Lateral Soil Pressure: $w_{soillat} := 20 \cdot H \cdot psf$ $w_{soillat} = 281.6\,plf$

Lateral Soil Pressure from Traffic Surcharge: $w_{soilsur} := 120 \cdot psf \cdot 1 \cdot ft$ $w_{soilsur} = 120\,plf$

Total Lateral Pressure on Wall: $w_{soil} := w_{soillat} + w_{soilsur}$

$w_{soil} = 401.6\,plf$

Positive Moment at Mid-span of wall (per AISC LRFD Beam Diagrams pg 4-190 & 4-195):

$$M_{midspan} := \frac{w_{soil} \cdot h_{wall}^2}{16} \qquad M_{midspan} = 3.081\,kft$$

$$M_{u\_midspan} := 1.3 \cdot M_{midspan} \qquad M_{u\_midspan} = 4.006\,kft$$

Negative Moment at End of wall (per AISC LRFD Beam Diagrams pg 4-195):

$$M_{endspan} := \frac{w_{soil} \cdot h_{wall}^2}{12} \qquad M_{endspan} = 4.109\,kft$$

$$M_{u\_endspan} := 1.3 \cdot M_{endspan} \qquad M_{u\_endspan} = 5.341\,kft$$

Shear at End of wall (per AISC LRFD Beam Diagrams pg 4-190):

$$V_{endwall} := \frac{w_{soil} \cdot h_{wall}}{2} \qquad V_{endwall} = 2.225\,kip$$

$$V_{u\_endwall} := 1.3 \cdot V_{endwall} \qquad V_{u\_endwall} = 2.892\,kip$$

Top Slab Information (Assumes design a one-way simple span):

Design Slab Span: $l_{slab} := 19.5 \cdot ft$

Design Slab Thickness: $t_{slab} := 18 \cdot in$

Depth of Fill: $d_{fill} := 1.5 \cdot ft$ $\quad$ $Impact := 1.3$

Unit Weight of Soil: $\gamma_{soil} := 125 \cdot pcf$

Truck Wheel Load (if applicable): $P := 4 \cdot kip$ $\quad$ Assume one 16 kip wheel load distributed over 4' width (AASHTO 3.24.3)

Truck Wheel Load distribution per AASHTO 6.4 (if fill depth > 2 feet):

Distribute load over square with sides of "dist": $dist := 1.75 \cdot d_{fill}$ $\quad$ $dist = 2.625\ ft$

Equivalent uniform truck wheel load: $p_{wheel\_pres} := \frac{P}{dist^2} \cdot ft$ $\quad$ $p_{wheel\_pres} = 0.58\ klf$

Positive Moment at Midspan of Top Slab:

$$M_{DL} := \frac{\left(d_{fill} \cdot \gamma_{soil} + t_{slab} \cdot 150pcf\right) \cdot 1ft \cdot l_{slab}^2}{8} \qquad M_{DL} = 19.607\ kft$$

$$M_{LL} := \frac{P \cdot l_{slab}}{4} \qquad M_{LL} = 19.5\ kft$$

Modify equation based on fill depth - See above

$$M := M_{DL} + M_{LL} \cdot Impact \qquad M = 44.957\ kft$$

$$M_u := 1.3\left(1.0 \cdot M_{DL} + 1.67 \cdot M_{LL} \cdot Impact\right) \qquad M_u = 80.523\ kft$$

Shear at End of wall:

$$V_{DL} := \frac{\left(d_{fill} \cdot \gamma_{soil} + t_{slab} \cdot 150pcf\right) \cdot 1ft \cdot l_{slab}}{2} \qquad V_{DL} = 4.022\ kip$$

$$V_{LL} := P \qquad V_{LL} = 4\ kip$$

Modify equation based on fill depth - See above

$$V := V_{DL} + V_{LL} \cdot Impact \qquad V = 9.222\ kip$$

$$V_u := 1.3\left(1.0 \cdot V_{DL} + 1.67 \cdot V_{LL} \cdot Impact\right) \qquad V_u = 16.518\ kip$$

Bottom Slab Information (Assumes design a one-way simple span):

Design of bottom slab based on soil pressure. Soil pressure calculated assuming all loads are evenly distributed over the area of the bottom slab.

Design Bottom Slab Span: $l_{bslab} := 19.5 \cdot ft$

Design Bottom Slab Thickness: $t_{bslab} := 17 \cdot in$

Area of Top Slab $area_{tslab} := 592 \cdot ft^2$

Area of Bottom Slab $area_{bslab} := 592 \cdot ft^2$

Perimeter of Box Structure: $perim := 109 \cdot ft$

Design Wall Thickness: $t_{wall} := 12 \cdot in$

Design Wall Height: $h_{wall} := 11.08 \cdot ft$

Load from Fill on Top Slab:

$P_{fill} := d_{fill} \cdot \gamma_{soil} \cdot area_{tslab}$ $P_{fill} = 111\ kip$

Load from Truck Wheel Load on Top Slab:

$P := 16 \cdot kip$

Number of wheel loads that can be placed on top slab: $N_P := 6$

$P_{truck} := P \cdot N_P \cdot 0.9$ (AASHTO3.12.1) $P_{truck} = 86.4\ kip$

Load from Top Slab Selfweight:

$P_{topslab} := t_{slab} \cdot 150 \cdot pcf \cdot area_{tslab}$ $P_{topslab} = 133.2\ kip$

Load from Wall Selfweight:

$P_{wall} := t_{wall} \cdot 150 \cdot pcf \cdot perim \cdot h_{wall}$ $P_{wall} = 181.158\ kip$

Ignore Bottom Slab Selfweight since it will cancel itself out in the design

Total Load for soil pressure calculations:

$P_{total} := P_{fill} + P_{truck} + P_{topslab} + P_{wall}$ $P_{total} = 511.758\ kip$

Soil Pressure for Design of Bottom Slab:

$$soilpres := \frac{P_{total}}{area_{bslab}} \qquad soilpres = 0.864\,ksf$$

Positive Moment at Midspan of Bottom Slab:

$$M := \frac{soilpres \cdot 1\,ft \cdot l_{bslab}^{2}}{8} \qquad M = 41.089\,kft$$

$$M_u := 1.3M \qquad M_u = 53.415\,kft$$

Shear at End of wall:

$$V := \frac{soilpres \cdot 1\,ft \cdot l_{bslab}}{2} \qquad V = 8.428\,kip$$

$$V_u := 1.3V \qquad V_u = 10.957\,kip$$

Kimley-Horn and Associates, Inc.

Job McDowell Road Subject Structure #4 Top Slab M+ Project No. 091131012

Designed by SMN Date 10/03/06 Checked by KJK Date

AASHTO 17th Edition LFD R/C Beam Design

REFERENCE: AASHTO 17th Edition, 2002

Note: Input parameters are in yellow highlight. Checks for adequacy are in blue highlight with border

Base Units: ft = 1L lb = 1M sec = 1T K = 1K lbf = force

Define Units: kips := 1000·lbf degF := 1·K ksi := 1000psi

DESIGN LOCATION: TOP SLAB M+

MATERIAL PROPERTIES:

CONCRETE :

$F'c := 3 \cdot ksi$ Concrete compressive strength

$z := 130 \frac{kips}{in}$ Quantity limiting distribution of flexural reinf. [AASHTO 8.16.8.4]

$W_c := .15 \cdot \frac{kips}{ft^3}$ [UNIT FORCE -- AASHTO 3.3.6]

REINFORCING STEEL :

$f_y := 60.0 \cdot ksi$ [Grade 60]

$f_s := 24.0 \cdot ksi$ [AASHTO 8.15.2.2 SERVICE LOAD]

$E_s := 29000ksi$ [AASHTO 8.7.2]

$\phi_m := .90$ Flexure - strength reduction factor [AASHTO 8.16.1.2.2]

$\phi_s := .85$ Shear - strength reduction factor [AASHTO 8.16.1.2.2]

CALCULATED MATERIAL PROPERTIES:

$fc := .4 \cdot F'c$ $fc = 1.2ksi$ [SERVICE LOAD]

$E_c := W_c^{1.5} \cdot 33 \cdot \sqrt{F'c} \cdot \left(\frac{ft^3}{lbf}\right)^{1.5} \cdot \sqrt{psi}$ $E_c = 3320.56\ ksi$ Elastic Modulus for concrete [AASHTO 8.7.1]

$n := floor\left(\frac{E_s}{E_c}\right) + if\left[.5 > \left(\frac{E_s}{E_c}\right) - floor\left(\frac{E_s}{E_c}\right), 0, 1\right]$ $n = 9$ Modular Ratio [AASHTO 8.15.3.4]

$\beta_1 := if\left[F'c \le 4.\cdot ksi, .85, .85 - (F'c - 4 \cdot ksi) \cdot .05 \cdot \frac{1}{ksi}\right]$ $\beta_1 = 0.85$ FOR $F'c < 4ksi$ $\beta_1 = .85$ [AASHTO 8.16.2.7]

DESIGN LOADS:

LOAD FACTOR	SERVICE LOAD	
$Mu := 80.5 \cdot kips \cdot ft$	$M_{max} := 45 \cdot kips \cdot ft$	Use service load to check serviceabilty requirements
$Vu := 16.5 \cdot kips$	$M_{min} := 19.6 \cdot kips \cdot ft$	

GEOMETRY:

$b := 1 \cdot ft$ Width of compression flange $depth := 1.50 \cdot ft$ Gross depth of section

REINFORCING STEEL:

$cover := 2 \cdot in$ Clear cover to stirrups [AASHTO 8.22.1]

Use # $bar := 8$ **--- Moment reinforcement**

$AsNo := 2$ Total number of bars used Total Area of Reinforcing steel

$A_{bar} = 0.79\ in^2$ Bar area $As\_a := AsNo \cdot A_{bar}$

$diam_{bar} = 1\ in$ Bar dia. $As\_a = 1.58\ in^2$ Total area of flexure reinforcing

Use # $bar_s := 0$ **--- Shear reinforcement**

$AsNo_s := 0$ Total number of legs used Total Area of Reinforcing steel

$A_{bar_s} = 0\ in^2$ Bar area $As\_a_s := AsNo_s \cdot A_{bar_s}$

$diam_{bar_s} = 0\ in$ Bar dia. $As\_a_s = 0\ in^2$ Total area of shear reinforcing

Calc. the dc & d to tension reinf.:

$dc := cover + diam_{bar_s} + \frac{diam_{bar}}{2}$ $dc = 2.5\ in$ Distance from the tension face to centroid of first layer of tension reinf.

$d := depth - dc$ $\boxed{d = 15.5\ in}$ Distance from compression face to centroid of tension reinf.

ULTIMATE MOMENT CAPACITY: [AASHTO 8.16.3.1]

$a := As\_a \cdot \frac{f_y}{.85 \cdot F'c \cdot b}$ $a = 3.1\ in$

$\phi Mn := \phi_m \cdot \left[As\_a \cdot f_y \cdot \left(d - \frac{a}{2} \right) \right]$ $\boxed{\phi Mn = 99.19\ kips \cdot ft}$ > $\boxed{Mu = 80.50\ kips \cdot ft}$

MAX. FLEXURE REINF. [AASHTO 8.16.3.1.1]

$$\rho_{bal} := \frac{0.85 \cdot \beta_1 \cdot F'c}{f_y} \cdot \frac{87000 \cdot psi}{87000 \cdot psi + f_y} \qquad \rho_{bal} = 0.02138$$

$$\rho := \frac{As\_a}{b \cdot d} \qquad \rho = 0.00849 \qquad \boxed{.75 \cdot \rho_{bal} = 0.01604} > \boxed{\rho = 0.00849}$$

MIN. FLEXURE REINF. [AASHTO 8.17.1.1]

$$Mc := \frac{b \cdot depth^2}{6} \cdot 7.5 \cdot \sqrt{psi} \cdot \sqrt{F'c} \qquad Mc = 22.18\,kips \cdot ft$$

CRACKING MOMENT on the basis of the modulus of rupture for normal weight concrete [AASHTO 8.15.2.1.1]

$$\boxed{\phi Mn = 99.19\,kips \cdot ft} > \boxed{1.2 \cdot Mc = 26.62\,kips \cdot ft}$$

OR

[AASHTO 8.17.1.2] $\boxed{\phi Mn = 99.19\,kips \cdot ft} > \boxed{1.33 Mu = 107.06\,kips \cdot ft}$

SERVICEABILITY REQUIREMENTS [AASHTO 8.16.8] - Use as general Check

$$k := \sqrt{2 \cdot n \cdot \rho + (n \cdot \rho)^2} - n \cdot \rho \qquad j := 1 - \frac{k}{3} \qquad k = 0.322$$

$$j = 0.8927$$

$$fs_{max} := \frac{M_{max}}{As\_a \cdot j \cdot d} \qquad fs_{min} := \frac{M_{min}}{As\_a \cdot j \cdot d} \qquad fc_{max} := fs_{max} \cdot \frac{k}{n \cdot (1 - k)}$$

$$\boxed{fs_{max} = 24.7\,ksi} < \boxed{f_s = 24\,ksi}$$

$$fs_{min} = 10.76\,ksi$$

$$\boxed{fc_{max} = 1.3\,ksi} < \boxed{fc = 1.2\,ksi}$$

FATIGUE STRESS LIMITS [AASHTO 8.16.8.3]

$rh := .3$ (r/h) of .3 is used as a default

$$f_f := 21.\cdot ksi - 0.33 \cdot fs_{min} + 8.\cdot ksi \cdot rh \qquad \boxed{f_f = 19.85\,ksi} > \boxed{(fs_{max} - fs_{min}) = 13.94\,ksi}$$

Max. stress range for reinf. steel

DISTRIBUTION OF FLEXURAL REINFORCEMENT [AASHTO 8.16.8.4]

$dc := if[cover > 2 \cdot in, dc - (cover - 2 \cdot in), dc]$ $\qquad dc = 2.5\,in$ $\qquad$ Use max. cover as 2"

$$A := \frac{2 \cdot dc \cdot b}{AsNo} \qquad A = 30\,in^2 \qquad f_{s\_z} := \frac{z}{(dc \cdot A)^{\frac{1}{3}}} \qquad f_{s\_z} = 30.83\,ksi$$

Effective tension area of conc. surrounding 1 bar
-- formula for 1 layer of steel

$$f_{s\_df} := if(f_{s\_z} \le .6 \cdot f_y, f_{s\_z}, .6 \cdot f_y) \qquad \boxed{f_{s\_df} = 30.83\,ksi} > \boxed{fs_{max} = 24.7\,ksi}$$

SHEAR STRENGTH [AASHTO 8.16.6.1.1]

$Vu_{reqd} := \frac{Vu}{\phi_s}$ $\boxed{Vu_{reqd} = 19.41\,kips}$

Shear Strength Provided by Concrete [AASHTO 8.16.6.2.1] (Assumes a rect. section)

$factor := \frac{Vu \cdot d}{Mu}$ $factor = 0.26$ $factor := if(factor > 1., 1., factor)$ $factor = 0.26$

$Fv_c := \begin{bmatrix} (1.9 \cdot \sqrt{psi} \cdot \sqrt{F'c} + 2500 \cdot psi \cdot \rho \cdot factor) \\ 2 \cdot \sqrt{psi} \cdot \sqrt{F'c} \end{bmatrix}$ $Fv_c = \begin{pmatrix} 109.69 \\ 109.54 \end{pmatrix} psi$

$Fvmax := 3.5 \cdot (\sqrt{psi} \cdot \sqrt{F'c})$ $Fvmax = 191.7\,psi$

$Fvc := if(max(Fv_c) < Fvmax, max(Fv_c), Fvmax)$ $Fvc = 109.69\,psi$ concrete shear strength

$Vc := Fvc \cdot b \cdot d$ $\boxed{Vc = 20.4\,kips}$ shear carried by concrete

IF $\boxed{Vc = 20.4\,kips}$ > $\boxed{Vu_{reqd} = 19.41\,kips}$ $\boxed{\text{No Shear reinf. required [AASHTO 8.19.1]}}$

If Shear Reinforcing is required [AASHTO 8.16.6.3]

$Vs_{reqd} := if(Vu_{reqd} - Vc < 0. \cdot kips, 0.000001 \cdot kips, Vu_{reqd} - Vc)$ $\boxed{Vs_{reqd} = 0\,kips}$

Max. shear reinf. spacing [AASHTO 8.19.1.2], AASHTO 8.19.3]

$smax := \begin{pmatrix} \frac{As\_a_s \cdot f_y}{50 \cdot psi \cdot b} \\ 24 \cdot in \\ \frac{d}{2} \end{pmatrix}$ $smax = \begin{pmatrix} 0 \\ 24 \\ 7.75 \end{pmatrix} in$ $smax := min(smax)$ $\boxed{smax = 0\,in}$

max stirrup spacing

Reduction for max spacing for high shear reinf. requirement: [AASHTO 8.16.6.3.8]

IF $\boxed{Vs_{reqd} = 0\,kips}$ > $\boxed{4 \cdot \sqrt{psi} \cdot \sqrt{F'c} \cdot b \cdot d = 40.75\,kips}$ Then reduce max. spacing by 1/2

$s_{max} := if(Vs_{reqd} > 4 \cdot \sqrt{psi} \cdot \sqrt{F'c} \cdot b \cdot d, .5 \cdot smax, smax)$ $\boxed{s_{max} = 0\,in}$

Max steel shear strength allowed: [AASHTO 8.16.6.3.9]

$\boxed{Vs_{reqd} = 0\,kips}$ < $\boxed{8 \cdot \sqrt{psi} \cdot \sqrt{F'c} \cdot b \cdot d = 81.5\,kips}$

Stirrup Spacing: [AASHTO 8.16.6.3]

$s := \frac{As\_a_s \cdot f_y \cdot d}{Vs_{reqd}}$ $s = 0\,in$

$s_{reqd} := if(s > s_{max}, s_{max}, s)$ Max. Stirrup spacing: $\boxed{s_{reqd} = 0\,in}$

CHECK CRACK CONTROL – [AASHTO 17.6.4.7]

$d = 15.5\,in$ Distance from compression face to centroid of tension reinf.

$d_c := cover + 0.5 \cdot diam_{bar}$ Thickness of cover from tension fiber to center of tension reinf.

$\beta := 1 + \frac{d_c}{.7 \cdot (d)}$ $\beta = 1.23$ $A = 30\,in^2$ Effective tension area of conc. surrounding 1 bar. (1 layer of steel)

$f_s := \frac{155}{\beta \cdot \sqrt[3]{d_c \cdot A}} \cdot \frac{kip}{in}$

$fs_{ck} := if(f_s \le .6 \cdot f_y, f_s, .6 \cdot f_y)$

$fs_{ck} = 29.87\,ksi$

$f_s = 29.87\,ksi$

$\frac{fs_{ck}}{fs_{max}} = 1.21$ > 1.0

Kimley-Horn and Associates, Inc.

Job McDowell Road Subject Structure #4 Btm Slab M+ Project No. 091131012

Designed by SMN Date 10/03/06 Checked by KJK Date

AASHTO 17th Edition LFD R/C Beam Design

REFERENCE: AASHTO 17th Edition, 2002

Note: Input parameters are in yellow highlight. Checks for adequacy are in blue highlight with border

Base Units: ft = 1L lb = 1M sec = 1T K = 1K lbf = force

Define Units: kips := 1000·lbf degF := 1·K ksi := 1000psi

DESIGN LOCATION: BOTTOM SLAB M+

MATERIAL PROPERTIES:

CONCRETE :

$F'c := 3 \cdot ksi$ Concrete compressive strength

$z := 130 \frac{kips}{in}$ Quantity limiting distribution of flexural reinf. [AASHTO 8.16.8.4]

$W_c := .15 \cdot \frac{kips}{ft^3}$ [UNIT FORCE -- AASHTO 3.3.6]

REINFORCING STEEL :

$f_y := 60.0 \cdot ksi$ [Grade 60]

$f_s := 24.0 \cdot ksi$ [AASHTO 8.15.2.2 SERVICE LOAD]

$E_s := 29000ksi$ [AASHTO 8.7.2]

$\phi_m := .90$ Flexure - strength reduction factor [AASHTO 8.16.1.2.2]

$\phi_s := .85$ Shear - strength reduction factor [AASHTO 8.16.1.2.2]

CALCULATED MATERIAL PROPERTIES:

$fc := .4 \cdot F'c$ $fc = 1.2ksi$ [SERVICE LOAD]

$E_c := W_c^{1.5} \cdot 33 \cdot \sqrt{F'c} \cdot \left(\frac{ft^3}{lbf}\right)^{1.5} \cdot \sqrt{psi}$ $E_c = 3320.56\,ksi$ Elastic Modulus for concrete [AASHTO 8.7.1]

$n := floor\left(\frac{E_s}{E_c}\right) + if\left[.5 > \left(\frac{E_s}{E_c}\right) - floor\left(\frac{E_s}{E_c}\right), 0, 1\right]$ $n = 9$ Modular Ratio [AASHTO 8.15.3.4]

$\beta_1 := if\left[F'c \le 4 \cdot ksi, .85, .85 - (F'c - 4 \cdot ksi) \cdot .05 \cdot \frac{1}{ksi}\right]$ $\beta_1 = 0.85$ FOR F'c < 4ksi β_1 = .85 [AASHTO 8.16.2.7]

DESIGN LOADS:

LOAD FACTOR	SERVICE LOAD	
$Mu := 53.4 \cdot kips \cdot ft$	$M_{max} := 41 \cdot kips \cdot ft$	Use service load to check serviceabilty requirements
$Vu := 11 \cdot kips$	$M_{min} := 35 \cdot kips \cdot ft$	

GEOMETRY:

$b := 1 \cdot ft$ Width of compression flange $depth := 1.4167 \cdot ft$ Gross depth of section

REINFORCING STEEL:

$cover := 2 \cdot in$ Clear cover to stirrups [AASHTO 8.22.1]

Use # $bar := 8$ **--- Moment reinforcement**

$AsNo := 2$ Total number of bars used Total Area of Reinforcing steel

$A_{bar} = 0.79\,in^2$ Bar area $As\_a := AsNo \cdot A_{bar}$

$diam_{bar} = 1\,in$ Bar dia. $As\_a = 1.58\,in^2$ Total area of flexure reinforcing

Use # $bar_s := 0$ **--- Shear reinforcement**

$AsNo_s := 0$ Total number of legs used Total Area of Reinforcing steel

$A_{bar_s} = 0\,in^2$ Bar area $As\_a_s := AsNo_s \cdot A_{bar_s}$

$diam_{bar_s} = 0\,in$ Bar dia. $As\_a_s = 0\,in^2$ Total area of shear reinforcing

Calc. the dc & d to tension reinf.:

$dc := cover + diam_{bar_s} + \frac{diam_{bar}}{2}$ $dc = 2.5\,in$ Distance from the tension face to centroid of first layer of tension reinf.

$d := depth - dc$ $\boxed{d = 14.5\,in}$ Distance from compression face to centroid of tension reinf.

ULTIMATE MOMENT CAPACITY: [AASHTO 8.16.3.1]

$a := As\_a \cdot \frac{f_y}{.85 \cdot F'c \cdot b}$ $a = 3.1\,in$

$\phi Mn := \phi_m \cdot \left[As\_a \cdot f_y \cdot \left(d - \frac{a}{2}\right)\right]$ $\boxed{\phi Mn = 92.08\,kips \cdot ft}$ > $\boxed{Mu = 53.40\,kips \cdot ft}$

MAX. FLEXURE REINF. [AASHTO 8.16.3.1.1]

$$\rho_{bal} := \frac{0.85 \cdot \beta_1 \cdot F'c}{f_y} \cdot \frac{87000 \cdot psi}{87000 \cdot psi + f_y} \qquad \rho_{bal} = 0.02138$$

$$\rho := \frac{As\_a}{b \cdot d} \qquad \rho = 0.00908 \qquad .75 \cdot \rho_{bal} = 0.01604 \quad > \quad \rho = 0.00908$$

MIN. FLEXURE REINF. [AASHTO 8.17.1.1]

$$Mc := \frac{b \cdot depth^2}{6} \cdot 7.5 \cdot \sqrt{psi} \cdot \sqrt{F'c} \qquad Mc = 19.79\,kips \cdot ft$$

CRACKING MOMENT on the basis of the modulus of rupture for normal weight concrete [AASHTO 8.15.2.1.1]

$$\phi Mn = 92.08\,kips \cdot ft \quad > \quad 1.2 \cdot Mc = 23.74\,kips \cdot ft$$

OR

[AASHTO 8.17.1.2] $\phi Mn = 92.08\,kips \cdot ft \quad > \quad 1.33 Mu = 71.02\,kips \cdot ft$

SERVICEABILITY REQUIREMENTS [AASHTO 8.16.8] - Use as general Check

$$k := \sqrt{2 \cdot n \cdot \rho + (n \cdot \rho)^2} - n \cdot \rho \qquad j := 1 - \frac{k}{3} \qquad k = 0.3307$$

$$j = 0.8898$$

$$fs_{max} := \frac{M_{max}}{As\_a \cdot j \cdot d} \qquad fs_{min} := \frac{M_{min}}{As\_a \cdot j \cdot d} \qquad fc_{max} := fs_{max} \cdot \frac{k}{n \cdot (1 - k)}$$

$$fs_{max} = 24.14\,ksi \quad < \quad f_s = 24\,ksi$$

$$fs_{min} = 20.6\,ksi$$

$$fc_{max} = 1.33\,ksi \quad < \quad fc = 1.2\,ksi$$

FATIGUE STRESS LIMITS [AASHTO 8.16.8.3]

$rh := .3$ (r/h) of .3 is used as a default

$$f_f := 21.\cdot ksi - 0.33 \cdot fs_{min} + 8.\cdot ksi \cdot rh \qquad f_f = 16.6\,ksi \quad > \quad (fs_{max} - fs_{min}) = 3.53\,ksi$$

Max. stress range for reinf. steel

DISTRIBUTION OF FLEXURAL REINFORCEMENT [AASHTO 8.16.8.4]

$dc := if[cover > 2 \cdot in, dc - (cover - 2 \cdot in), dc]$ $\qquad dc = 2.5\,in$ $\qquad$ Use max. cover as 2"

$$A := \frac{2 \cdot dc \cdot b}{AsNo} \qquad A = 30\,in^2 \qquad f_{s\_z} := \frac{z}{(dc \cdot A)^{\frac{1}{3}}} \qquad f_{s\_z} = 30.83\,ksi$$

Effective tension area of conc. surrounding 1 bar
-- formula for 1 layer of steel

$$f_{s\_df} := if(f_{s\_z} \le .6 \cdot f_y, f_{s\_z}, .6 \cdot f_y) \qquad f_{s\_df} = 30.83\,ksi \quad > \quad fs_{max} = 24.14\,ksi$$

SHEAR STRENGTH [AASHTO 8.16.6.1.1]

$Vu_{reqd} := \frac{Vu}{\phi_s}$ $\boxed{Vu_{reqd} = 12.94\,kips}$

Shear Strength Provided by Concrete [AASHTO 8.16.6.2.1] (Assumes a rect. section)

$factor := \frac{Vu \cdot d}{Mu}$ $factor = 0.25$ $factor := if(factor > 1., 1., factor)$ $factor = 0.25$

$Fv_c := \begin{bmatrix} (1.9 \cdot \sqrt{psi} \cdot \sqrt{F'c} + 2500 \cdot psi \cdot \rho \cdot factor) \\ 2 \cdot \sqrt{psi} \cdot \sqrt{F'c} \end{bmatrix}$ $Fv_c = \begin{pmatrix} 109.72 \\ 109.54 \end{pmatrix} psi$

$Fvmax := 3.5 \cdot (\sqrt{psi} \cdot \sqrt{F'c})$ $Fvmax = 191.7\,psi$

$Fvc := if(max(Fv_c) < Fvmax, max(Fv_c), Fvmax)$ $Fvc = 109.72\,psi$ concrete shear strength

$Vc := Fvc \cdot b \cdot d$ $\boxed{Vc = 19.09\,kips}$ shear carried by concrete

IF $\boxed{Vc = 19.09\,kips}$ > $\boxed{Vu_{reqd} = 12.94\,kips}$ $\boxed{\text{No Shear reinf. required [AASHTO 8.19.1]}}$

If Shear Reinforcing is required [AASHTO 8.16.6.3]

$Vs_{reqd} := if(Vu_{reqd} - Vc < 0. \cdot kips, 0.000001 \cdot kips, Vu_{reqd} - Vc)$ $\boxed{Vs_{reqd} = 0\,kips}$

Max. shear reinf. spacing [AASHTO 8.19.1.2], AASHTO 8.19.3]

$smax := \begin{pmatrix} \frac{As\_a_s \cdot f_y}{50 \cdot psi \cdot b} \\ 24 \cdot in \\ \frac{d}{2} \end{pmatrix}$ $smax = \begin{pmatrix} 0 \\ 24 \\ 7.25 \end{pmatrix} in$ $smax := min(smax)$ $\boxed{smax = 0\,in}$

max stirrup spacing

Reduction for max spacing for high shear reinf. requirement: [AASHTO 8.16.6.3.8]

IF $\boxed{Vs_{reqd} = 0\,kips}$ > $\boxed{4 \cdot \sqrt{psi} \cdot \sqrt{F'c} \cdot b \cdot d = 38.12\,kips}$ Then reduce max. spacing by 1/2

$s_{max} := if(Vs_{reqd} > 4 \cdot \sqrt{psi} \cdot \sqrt{F'c} \cdot b \cdot d, .5 \cdot smax, smax)$ $\boxed{s_{max} = 0\,in}$

Max steel shear strength allowed: [AASHTO 8.16.6.3.9]

$\boxed{Vs_{reqd} = 0\,kips}$ < $\boxed{8 \cdot \sqrt{psi} \cdot \sqrt{F'c} \cdot b \cdot d = 76.25\,kips}$

Stirrup Spacing: [AASHTO 8.16.6.3]

$s := \frac{As\_a_s \cdot f_y \cdot d}{Vs_{reqd}}$ $s = 0\,in$

$s_{reqd} := if(s > s_{max}, s_{max}, s)$ Max. Stirrup spacing: $\boxed{s_{reqd} = 0\,in}$

CHECK CRACK CONTROL -- [AASHTO 17.6.4.7]

$d = 14.5\,in$ Distance from compression face to centroid of tension reinf.

$d_c := cover + 0.5 \cdot diam_{bar}$ Thickness of cover from tension fiber to center of tension reinf.

$\beta := 1 + \frac{d_c}{.7 \cdot (d)}$ $\beta = 1.25$ $A = 30\,in^2$ Effective tension area of conc. surrounding 1 bar. (1 layer of steel)

$f_s := \frac{155}{\beta \cdot \sqrt[3]{d_c \cdot A}} \cdot \frac{kip}{in}$

$fs_{ck} := if\left(f_s \le .6 \cdot f_y, f_s, .6 \cdot f_y\right)$

$fs_{ck} = 29.49\,ksi$

$f_s = 29.49\,ksi$

$\boxed{\frac{fs_{ck}}{fs_{max}} = 1.22} > \boxed{1.0}$

Kimley-Horn and Associates, Inc.

Job McDowell Road Subject Structure #4 Walls M+ Project No. 091131012

Designed by SMN Date 10/03/06 Checked by KJK Date

AASHTO 17th Edition LFD R/C Beam Design

REFERENCE: AASHTO 17th Edition, 2002

Note: Input parameters are in yellow highlight. Checks for adequacy are in blue highlight with border

Base Units: ft = 1L lb = 1M sec = 1T K = 1K lbf = force

Define Units: kips := 1000·lbf degF := 1·K ksi := 1000psi

DESIGN LOCATION: WALLS M+

MATERIAL PROPERTIES:

CONCRETE :

$F'c := 3 \cdot ksi$ Concrete compressive strength

$z := 130 \frac{kips}{in}$ Quantity limiting distribution of flexural reinf. [AASHTO 8.16.8.4]

$W_c := .15 \cdot \frac{kips}{ft^3}$ [UNIT FORCE -- AASHTO 3.3.6]

REINFORCING STEEL :

$f_y := 60.0 \cdot ksi$ [Grade 60]

$f_s := 24.0 \cdot ksi$ [AASHTO 8.15.2.2 SERVICE LOAD]

$E_s := 29000ksi$ [AASHTO 8.7.2]

$\phi_m := .90$ Flexure - strength reduction factor [AASHTO 8.16.1.2.2]

$\phi_s := .85$ Shear - strength reduction factor [AASHTO 8.16.1.2.2]

CALCULATED MATERIAL PROPERTIES:

$fc := .4 \cdot F'c$ $fc = 1.2ksi$ [SERVICE LOAD]

$E_c := W_c^{1.5} \cdot 33 \cdot \sqrt{F'c} \cdot \left(\frac{ft^3}{lbf}\right)^{1.5} \cdot \sqrt{psi}$ $E_c = 3320.56\,ksi$ Elastic Modulus for concrete [AASHTO 8.7.1]

$n := floor\left(\frac{E_s}{E_c}\right) + if\left[.5 > \left(\frac{E_s}{E_c}\right) - floor\left(\frac{E_s}{E_c}\right), 0, 1\right]$ $n = 9$ Modular Ratio [AASHTO 8.15.3.4]

$\beta_1 := if\left[F'c \le 4 \cdot ksi, .85, .85 - (F'c - 4 \cdot ksi) \cdot .05 \cdot \frac{1}{ksi}\right]$ $\beta_1 = 0.85$ FOR F'c < 4ksi β_1 = .85 [AASHTO 8.16.2.7]

DESIGN LOADS:

LOAD FACTOR	SERVICE LOAD	
$Mu := 5.3 \cdot kips \cdot ft$	$M_{max} := 4 \cdot kips \cdot ft$	Use service load to check serviceabilty requirements
$Vu := 4 \cdot kips$	$M_{min} := 4 \cdot kips \cdot ft$	

GEOMETRY:

$b := 1 \cdot ft$ Width of compression flange $depth := 1 \cdot ft$ Gross depth of section

REINFORCING STEEL:

$cover := 2 \cdot in$ Clear cover to stirrups [AASHTO 8.22.1]

Use # $bar := 6$ **--- Moment reinforcement**

$AsNo := 1$ Total number of bars used Total Area of Reinforcing steel

$A_{bar} = 0.44\ in^2$ Bar area $As\_a := AsNo \cdot A_{bar}$

$diam_{bar} = 0.75\ in$ Bar dia. $As\_a = 0.44\ in^2$ Total area of flexure reinforcing

Use # $bar_s := 0$ **--- Shear reinforcement**

$AsNo_s := 0$ Total number of legs used Total Area of Reinforcing steel

$A_{bar_s} = 0\ in^2$ Bar area $As\_a_s := AsNo_s \cdot A_{bar_s}$

$diam_{bar_s} = 0\ in$ Bar dia. $As\_a_s = 0\ in^2$ Total area of shear reinforcing

Calc. the dc & d to tension reinf.:

$dc := cover + diam_{bar_s} + \frac{diam_{bar}}{2}$ $dc = 2.38\ in$ Distance from the tension face to centroid of first layer of tension reinf.

$d := depth - dc$ $\boxed{d = 9.63\ in}$ Distance from compression face to centroid of tension reinf.

ULTIMATE MOMENT CAPACITY: [AASHTO 8.16.3.1]

$a := As\_a \cdot \frac{f_y}{.85 \cdot F'c \cdot b}$ $a = 0.86\ in$

$\phi Mn := \phi_m \cdot \left[As\_a \cdot f_y \cdot \left(d - \frac{a}{2} \right) \right]$ $\boxed{\phi Mn = 18.2\ kips \cdot ft}$ $>$ $\boxed{Mu = 5.30\ kips \cdot ft}$

MAX. FLEXURE REINF. [AASHTO 8.16.3.1.1]

$$\rho_{bal} := \frac{0.85 \cdot \beta_1 \cdot F'c}{f_y} \cdot \frac{87000 \cdot psi}{87000 \cdot psi + f_y} \qquad \rho_{bal} = 0.02138$$

$$\rho := \frac{As\_a}{b \cdot d} \qquad \rho = 0.00381 \qquad .75 \cdot \rho_{bal} = 0.01604 \quad > \quad \rho = 0.00381$$

MIN. FLEXURE REINF. [AASHTO 8.17.1.1]

$$Mc := \frac{b \cdot depth^2}{6} \cdot 7.5 \cdot \sqrt{psi} \cdot \sqrt{F'c} \qquad Mc = 9.86\,kips \cdot ft$$

CRACKING MOMENT on the basis of the modulus of rupture for normal weight concrete [AASHTO 8.15.2.1.1]

$$\phi Mn = 18.2\,kips \cdot ft \quad > \quad 1.2 \cdot Mc = 11.83\,kips \cdot ft$$

OR

[AASHTO 8.17.1.2] $\phi Mn = 18.2\,kips \cdot ft \quad > \quad 1.33 Mu = 7.05\,kips \cdot ft$

SERVICEABILITY REQUIREMENTS [AASHTO 8.16.8] - Use as general Check

$$k := \sqrt{2 \cdot n \cdot \rho + (n \cdot \rho)^2} - n \cdot \rho \qquad j := 1 - \frac{k}{3} \qquad k = 0.2298$$

$$j = 0.9234$$

$$fs_{max} := \frac{M_{max}}{As\_a \cdot j \cdot d} \qquad fs_{min} := \frac{M_{min}}{As\_a \cdot j \cdot d} \qquad fc_{max} := fs_{max} \cdot \frac{k}{n \cdot (1 - k)}$$

$$fs_{max} = 12.27\,ksi \quad < \quad f_s = 24\,ksi$$

$$fs_{min} = 12.27\,ksi$$

$$fc_{max} = 0.41\,ksi \quad < \quad fc = 1.2\,ksi$$

FATIGUE STRESS LIMITS [AASHTO 8.16.8.3]

$rh := .3$ (r/h) of .3 is used as a default

$$f_f := 21.\,ksi - 0.33 \cdot fs_{min} + 8.\,ksi \cdot rh \qquad f_f = 19.35\,ksi \quad > \quad (fs_{max} - fs_{min}) = 0\,ksi$$

Max. stress range for reinf. steel

DISTRIBUTION OF FLEXURAL REINFORCEMENT [AASHTO 8.16.8.4]

$$dc := if[cover > 2 \cdot in, dc - (cover - 2 \cdot in), dc] \qquad dc = 2.38\,in$$

Use max. cover as 2"

$$A := \frac{2 \cdot dc \cdot b}{AsNo} \qquad A = 57\,in^2 \qquad f_{s\_z} := \frac{z}{(dc \cdot A)^{\frac{1}{3}}} \qquad f_{s\_z} = 25.32\,ksi$$

Effective tension area of conc. surrounding 1 bar
-- formula for 1 layer of steel

$$f_{s\_df} := if(f_{s\_z} \le .6 \cdot f_y, f_{s\_z}, .6 \cdot f_y) \qquad f_{s\_df} = 25.32\,ksi \quad > \quad fs_{max} = 12.27\,ksi$$

SHEAR STRENGTH [AASHTO 8.16.6.1.1]

$Vu_{reqd} := \frac{Vu}{\phi_s}$ $\boxed{Vu_{reqd} = 4.71\,kips}$

Shear Strength Provided by Concrete [AASHTO 8.16.6.2.1] (Assumes a rect. section)

$factor := \frac{Vu \cdot d}{Mu}$ $factor = 0.61$ $factor := if(factor > 1., 1., factor)$ $factor = 0.61$

$Fv_c := \begin{bmatrix} (1.9 \cdot \sqrt{psi} \cdot \sqrt{F'c} + 2500 \cdot psi \cdot \rho \cdot factor) \\ 2 \cdot \sqrt{psi} \cdot \sqrt{F'c} \end{bmatrix}$ $Fv_c = \begin{pmatrix} 109.83 \\ 109.54 \end{pmatrix} psi$

$Fvmax := 3.5 \cdot (\sqrt{psi} \cdot \sqrt{F'c})$ $Fvmax = 191.7\,psi$

$Fvc := if(max(Fv_c) < Fvmax, max(Fv_c), Fvmax)$ $Fvc = 109.83\,psi$ concrete shear strength

$Vc := Fvc \cdot b \cdot d$ $\boxed{Vc = 12.69\,kips}$ shear carried by concrete

IF $\boxed{Vc = 12.69\,kips}$ > $\boxed{Vu_{reqd} = 4.71\,kips}$ $\boxed{\text{No Shear reinf. required [AASHTO 8.19.1]}}$

If Shear Reinforcing is required [AASHTO 8.16.6.3]

$Vs_{reqd} := if(Vu_{reqd} - Vc < 0.\cdot kips, 0.000001 \cdot kips, Vu_{reqd} - Vc)$ $\boxed{Vs_{reqd} = 0\,kips}$

Max. shear reinf. spacing [AASHTO 8.19.1.2], AASHTO 8.19.3]

$smax := \begin{pmatrix} \frac{As\_a_s \cdot f_y}{50 \cdot psi \cdot b} \\ 24 \cdot in \\ \frac{d}{2} \end{pmatrix}$ $smax = \begin{pmatrix} 0 \\ 24 \\ 4.81 \end{pmatrix} in$ $smax := min(smax)$ $\boxed{smax = 0\,in}$

max stirrup spacing

Reduction for max spacing for high shear reinf. requirement: [AASHTO 8.16.6.3.8]

IF $\boxed{Vs_{reqd} = 0\,kips}$ > $\boxed{4 \cdot \sqrt{psi} \cdot \sqrt{F'c} \cdot b \cdot d = 25.3\,kips}$ Then reduce max. spacing by 1/2

$s_{max} := if(Vs_{reqd} > 4 \cdot \sqrt{psi} \cdot \sqrt{F'c} \cdot b \cdot d, .5 \cdot smax, smax)$ $\boxed{s_{max} = 0\,in}$

Max steel shear strength allowed: [AASHTO 8.16.6.3.9]

$\boxed{Vs_{reqd} = 0\,kips}$ < $\boxed{8 \cdot \sqrt{psi} \cdot \sqrt{F'c} \cdot b \cdot d = 50.61\,kips}$

Stirrup Spacing: [AASHTO 8.16.6.3]

$s := \frac{As\_a_s \cdot f_y \cdot d}{Vs_{reqd}}$ $s = 0\,in$

$s_{reqd} := if(s > s_{max}, s_{max}, s)$ Max. Stirrup spacing: $\boxed{s_{reqd} = 0\,in}$

CHECK CRACK CONTROL -- [AASHTO 17.6.4.7]

$d = 9.63\,in$ Distance from compression face to centroid of tension reinf.

$d_c := cover + 0.5 \cdot diam_{bar}$ Thickness of cover from tension fiber to center of tension reinf.

$\beta := 1 + \frac{d_c}{.7 \cdot (d)}$ $\beta = 1.35$ $A = 57\,in^2$ Effective tension area of conc. surrounding 1 bar. (1 layer of steel)

$f_s := \frac{155}{\beta \cdot \sqrt[3]{d_c \cdot A}} \cdot \frac{kip}{in}$

$fs_{ck} := if(f_s \le .6 \cdot f_y, f_s, .6 \cdot f_y)$

$fs_{ck} = 22.32\,ksi$

$f_s = 22.32\,ksi$

$\frac{fs_{ck}}{fs_{max}} = 1.82$ > 1.0

Kimley-Horn and Associates, Inc.

Job McDowell Road Subject Structure #4 Walls M- Project No. 091131012

Designed by SMN Date 10/03/06 Checked by KJK Date

AASHTO 17th Edition LFD R/C Beam Design

REFERENCE: AASHTO 17th Edition, 2002

Note: Input parameters are in yellow highlight. Checks for adequacy are in blue highlight with border

Base Units: ft = 1L lb = 1M sec = 1T K = 1K lbf = force

Define Units: kips := 1000·lbf degF := 1·K ksi := 1000psi

DESIGN LOCATION: WALLS M-

MATERIAL PROPERTIES:

CONCRETE :

$F'c := 3 \cdot ksi$ Concrete compressive strength

$z := 130 \frac{kips}{in}$ Quantity limiting distribution of flexural reinf. [AASHTO 8.16.8.4]

$W_c := .15 \cdot \frac{kips}{ft^3}$ [UNIT FORCE -- AASHTO 3.3.6]

REINFORCING STEEL :

$f_y := 60.0 \cdot ksi$ [Grade 60]

$f_s := 24.0 \cdot ksi$ [AASHTO 8.15.2.2 SERVICE LOAD]

$E_s := 29000ksi$ [AASHTO 8.7.2]

$\phi_m := .90$ Flexure - strength reduction factor [AASHTO 8.16.1.2.2]

$\phi_s := .85$ Shear - strength reduction factor [AASHTO 8.16.1.2.2]

CALCULATED MATERIAL PROPERTIES:

$fc := .4 \cdot F'c$

$fc = 1.2 ksi$ [SERVICE LOAD]

$E_c := W_c^{1.5} \cdot 33 \cdot \sqrt{F'c} \cdot \left(\frac{ft^3}{lbf}\right)^{1.5} \cdot \sqrt{psi}$

$E_c = 3320.56 ksi$ Elastic Modulus for concrete [AASHTO 8.7.1]

$n := floor\left(\frac{E_s}{E_c}\right) + if\left[.5 > \left(\frac{E_s}{E_c}\right) - floor\left(\frac{E_s}{E_c}\right), 0, 1\right]$

$n = 9$ Modular Ratio [AASHTO 8.15.3.4]

$\beta_1 := if\left[F'c \le 4. \cdot ksi, .85, .85 - (F'c - 4 \cdot ksi) \cdot .05 \cdot \frac{1}{ksi}\right]$

$\beta_1 = 0.85$ FOR $F'c < 4ksi$ $\beta_1 = .85$ [AASHTO 8.16.2.7]

DESIGN LOADS:

LOAD FACTOR	SERVICE LOAD	
$Mu := 5.3 \cdot kips \cdot ft$	$M_{max} := 4.1 \cdot kips \cdot ft$	Use service load to check serviceabilty requirements
$Vu := 3 \cdot kips$	$M_{min} := 4 \cdot kips \cdot ft$	

GEOMETRY:

$b := 1 \cdot ft$ Width of compression flange $depth := 1 \cdot ft$ Gross depth of section

REINFORCING STEEL:

$cover := 2 \cdot in$ Clear cover to stirrups [AASHTO 8.22.1]

Use # $bar := 6$ **--- Moment reinforcement**

$AsNo := 1$ Total number of bars used Total Area of Reinforcing steel

$A_{bar} = 0.44\ in^2$ Bar area $As\_a := AsNo \cdot A_{bar}$

$diam_{bar} = 0.75\ in$ Bar dia. $As\_a = 0.44\ in^2$ Total area of flexure reinforcing

Use # $bar_s := 0$ **--- Shear reinforcement**

$AsNo_s := 0$ Total number of legs used Total Area of Reinforcing steel

$A_{bar_s} = 0\ in^2$ Bar area $As\_a_s := AsNo_s \cdot A_{bar_s}$

$diam_{bar_s} = 0\ in$ Bar dia. $As\_a_s = 0\ in^2$ Total area of shear reinforcing

Calc. the dc & d to tension reinf.:

$dc := cover + diam_{bar_s} + \frac{diam_{bar}}{2}$ $dc = 2.38\ in$ Distance from the tension face to centroid of first layer of tension reinf.

$d := depth - dc$ $\boxed{d = 9.63\ in}$ Distance from compression face to centroid of tension reinf.

ULTIMATE MOMENT CAPACITY: [AASHTO 8.16.3.1]

$a := As\_a \cdot \frac{f_y}{.85 \cdot F'c \cdot b}$ $a = 0.86\ in$

$\phi Mn := \phi_m \cdot \left[As\_a \cdot f_y \cdot \left(d - \frac{a}{2} \right) \right]$ $\boxed{\phi Mn = 18.2\ kips \cdot ft}$ > $\boxed{Mu = 5.30\ kips \cdot ft}$

MAX. FLEXURE REINF. [AASHTO 8.16.3.1.1]

$$\rho_{bal} := \frac{0.85 \cdot \beta_1 \cdot F'c}{f_y} \cdot \frac{87000 \cdot psi}{87000 \cdot psi + f_y} \qquad \rho_{bal} = 0.02138$$

$$\rho := \frac{As\_a}{b \cdot d} \qquad \rho = 0.00381 \qquad .75 \cdot \rho_{bal} = 0.01604 \quad > \quad \rho = 0.00381$$

MIN. FLEXURE REINF. [AASHTO 8.17.1.1]

$$Mc := \frac{b \cdot depth^2}{6} \cdot 7.5 \cdot \sqrt{psi} \cdot \sqrt{F'c} \qquad Mc = 9.86\,kips \cdot ft$$

CRACKING MOMENT on the basis of the modulus of rupture for normal weight concrete [AASHTO 8.15.2.1.1]

$$\phi Mn = 18.2\,kips \cdot ft \quad > \quad 1.2 \cdot Mc = 11.83\,kips \cdot ft$$

OR

[AASHTO 8.17.1.2] $\phi Mn = 18.2\,kips \cdot ft \quad > \quad 1.33 Mu = 7.05\,kips \cdot ft$

SERVICEABILITY REQUIREMENTS [AASHTO 8.16.8] - Use as general Check

$$k := \sqrt{2 \cdot n \cdot \rho + (n \cdot \rho)^2} - n \cdot \rho \qquad j := 1 - \frac{k}{3} \qquad k = 0.2298$$

$$j = 0.9234$$

$$fs_{max} := \frac{M_{max}}{As\_a \cdot j \cdot d} \qquad fs_{min} := \frac{M_{min}}{As\_a \cdot j \cdot d} \qquad fc_{max} := fs_{max} \cdot \frac{k}{n \cdot (1 - k)}$$

$$fs_{max} = 12.58\,ksi \quad < \quad f_s = 24\,ksi$$

$$fs_{min} = 12.27\,ksi$$

$$fc_{max} = 0.42\,ksi \quad < \quad fc = 1.2\,ksi$$

FATIGUE STRESS LIMITS [AASHTO 8.16.8.3]

$rh := .3$ (r/h) of .3 is used as a default

$$f_f := 21.\,ksi - 0.33 \cdot fs_{min} + 8.\,ksi \cdot rh \qquad f_f = 19.35\,ksi \quad > \quad (fs_{max} - fs_{min}) = 0.31\,ksi$$

Max. stress range for reinf. steel

DISTRIBUTION OF FLEXURAL REINFORCEMENT [AASHTO 8.16.8.4]

$dc := if[cover > 2 \cdot in, dc - (cover - 2 \cdot in), dc]$ $\qquad dc = 2.38\,in$ $\qquad$ Use max. cover as 2"

$$A := \frac{2 \cdot dc \cdot b}{AsNo} \qquad A = 57\,in^2 \qquad f_{s\_z} := \frac{z}{(dc \cdot A)^{\frac{1}{3}}} \qquad f_{s\_z} = 25.32\,ksi$$

Effective tension area of conc. surrounding 1 bar
-- formula for 1 layer of steel

$$f_{s\_df} := if(f_{s\_z} \le .6 \cdot f_y, f_{s\_z}, .6 \cdot f_y) \qquad f_{s\_df} = 25.32\,ksi \quad > \quad fs_{max} = 12.58\,ksi$$

SHEAR STRENGTH [AASHTO 8.16.6.1.1]

$Vu_{reqd} := \frac{Vu}{\phi_s}$ $\boxed{Vu_{reqd} = 3.53\,kips}$

Shear Strength Provided by Concrete [AASHTO 8.16.6.2.1] (Assumes a rect. section)

$factor := \frac{Vu \cdot d}{Mu}$ $factor = 0.45$ $factor := if(factor > 1., 1., factor)$ $factor = 0.45$

$Fv_c := \begin{bmatrix} (1.9 \cdot \sqrt{psi} \cdot \sqrt{F'c} + 2500 \cdot psi \cdot \rho \cdot factor) \\ 2 \cdot \sqrt{psi} \cdot \sqrt{F'c} \end{bmatrix}$ $Fv_c = \begin{pmatrix} 108.39 \\ 109.54 \end{pmatrix} psi$

$Fvmax := 3.5 \cdot (\sqrt{psi} \cdot \sqrt{F'c})$ $Fvmax = 191.7\,psi$

$Fvc := if(max(Fv_c) < Fvmax, max(Fv_c), Fvmax)$ $Fvc = 109.54\,psi$ concrete shear strength

$Vc := Fvc \cdot b \cdot d$ $\boxed{Vc = 12.65\,kips}$ shear carried by concrete

IF $\boxed{Vc = 12.65\,kips}$ > $\boxed{Vu_{reqd} = 3.53\,kips}$ $\boxed{\text{No Shear reinf. required [AASHTO 8.19.1]}}$

If Shear Reinforcing is required [AASHTO 8.16.6.3]

$Vs_{reqd} := if(Vu_{reqd} - Vc < 0. \cdot kips, 0.000001 \cdot kips, Vu_{reqd} - Vc)$ $\boxed{Vs_{reqd} = 0\,kips}$

Max. shear reinf. spacing [AASHTO 8.19.1.2], AASHTO 8.19.3]

$smax := \begin{pmatrix} \frac{As\_a_s \cdot f_y}{50 \cdot psi \cdot b} \\ 24 \cdot in \\ \frac{d}{2} \end{pmatrix}$ $smax = \begin{pmatrix} 0 \\ 24 \\ 4.81 \end{pmatrix} in$ $smax := min(smax)$ $\boxed{smax = 0\,in}$

max stirrup spacing

Reduction for max spacing for high shear reinf. requirement: [AASHTO 8.16.6.3.8]

IF $\boxed{Vs_{reqd} = 0\,kips}$ > $\boxed{4 \cdot \sqrt{psi} \cdot \sqrt{F'c} \cdot b \cdot d = 25.3\,kips}$ Then reduce max. spacing by 1/2

$s_{max} := if(Vs_{reqd} > 4 \cdot \sqrt{psi} \cdot \sqrt{F'c} \cdot b \cdot d, .5 \cdot smax, smax)$ $\boxed{s_{max} = 0\,in}$

Max steel shear strength allowed: [AASHTO 8.16.6.3.9]

$\boxed{Vs_{reqd} = 0\,kips}$ < $\boxed{8 \cdot \sqrt{psi} \cdot \sqrt{F'c} \cdot b \cdot d = 50.61\,kips}$

Stirrup Spacing: [AASHTO 8.16.6.3]

$s := \frac{As\_a_s \cdot f_y \cdot d}{Vs_{reqd}}$ $s = 0\,in$

$s_{reqd} := if(s > s_{max}, s_{max}, s)$ Max. Stirrup spacing: $\boxed{s_{reqd} = 0\,in}$

CHECK CRACK CONTROL -- [AASHTO 17.6.4.7]

$d = 9.63\,in$ Distance from compression face to centroid of tension reinf.

$d_c := cover + 0.5 \cdot diam_{bar}$ Thickness of cover from tension fiber to center of tension reinf.

$\beta := 1 + \frac{d_c}{.7 \cdot (d)}$ $\beta = 1.35$ $A = 57\,in^2$ Effective tension area of conc. surrounding 1 bar. (1 layer of steel)

$f_s := \frac{155}{\beta \cdot \sqrt[3]{d_c \cdot A}} \cdot \frac{kip}{in}$

$fs_{ck} := if(f_s \le .6 \cdot f_y, f_s, .6 \cdot f_y)$

$fs_{ck} = 22.32\,ksi$

$f_s = 22.32\,ksi$

$\frac{fs_{ck}}{fs_{max}} = 1.77$ > 1.0

STRUCTURE #5 - #10

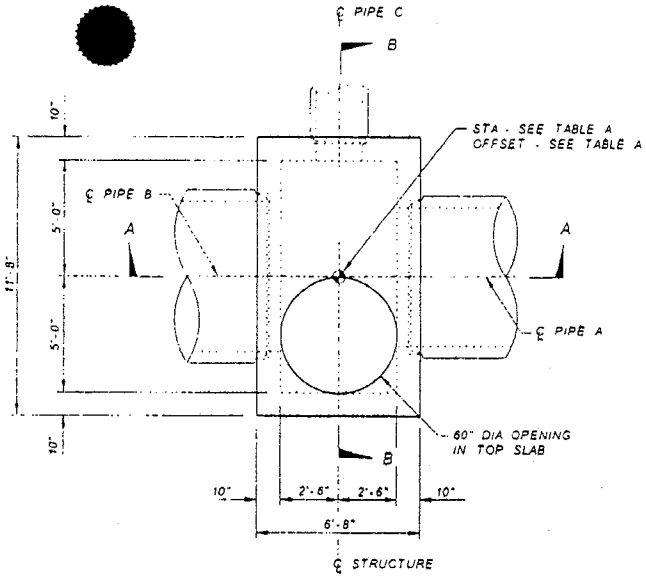

TOP PLAN
NTS

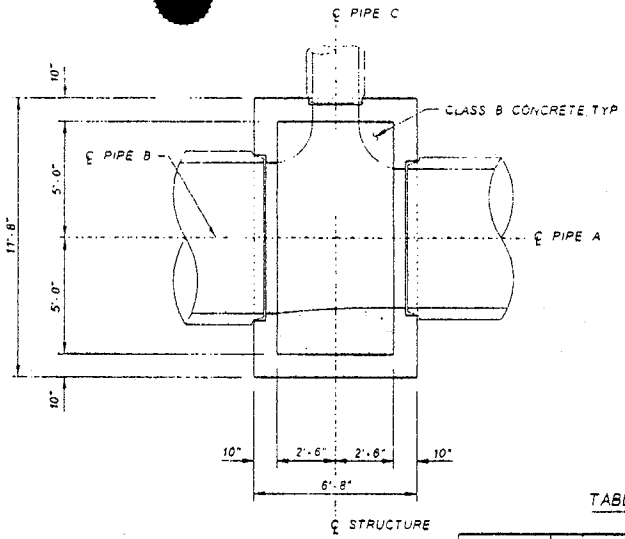

BOTTOM PLAN
NTS

TABLE A: STATION, OFFSETS, AND ELEVATIONS

STRUCTURE	STATION	OFFSET	IE A	IE B	IE C	ELEV A	ELEV B
5	19+99.50	37.00 RT	1652.7	1650.9	1653.2	1661.9	1650.9
6	25+47.00	37.00 RT	1664.5	1662.5	1662.5	1673.5	1662.5
7	33+18.50	37.00 RT	1679.8	1677.8	1684.2	1688.8	1677.8
8	36+98.50	37.00 RT	1687.5	1685.5	N/A	1695.5	1685.5
9	52+61.70	37.00 RT	1719.9	1717.9	1719.9	1728.9	1717.9
10	57+00.00	37.00 RT	1730.2	1728.2	1730.2	1739.2	1728.2

TABLE B: PIPE DIAMETERS

STRUCTURE	PIPE A DIA	PIPE B DIA	PIPE C DIA
5	78"	78"	24"
6	78"	78"	24"
7	78"	78"	24"
8	78"	78"	N/A
9	72"	72"	24"
10	72"	72"	24"

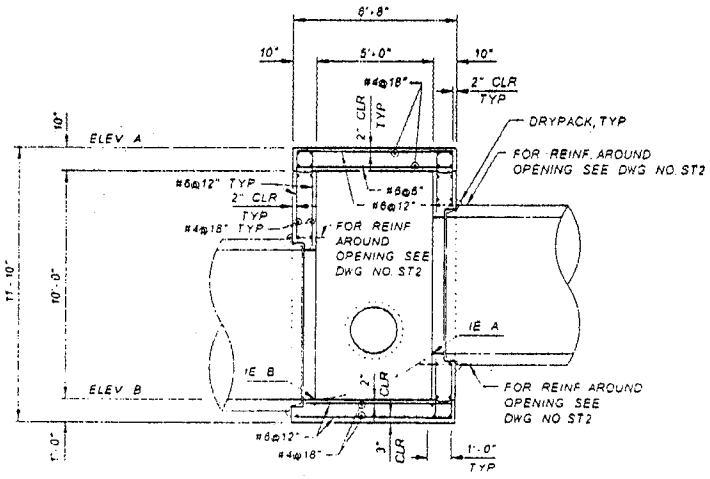

SECTION A-A
NTS

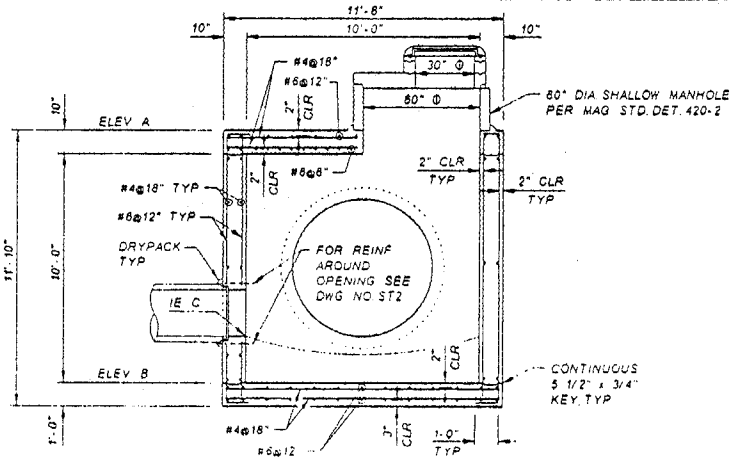

SECTION B-B
NTS

NO	REVISION	BY	DATE
3			
2			
1			

FLOOD CONTROL DISTRICT
OF MARICOPA COUNTY
ENGINEERING DIVISION

MCDOWELL ROAD BASIN
AND STORM DRAIN PROJECT
PCN 420.03.31

	BY	DATE
DESIGNED	SMN	10/04/06
DRAWN	MSK	10/04/06
CHECKED	KJK/DJL	10/04/06

Kimley-Horn and Associates Inc.

DRAWING NO. ST6 | STRUCTURES #5 TO #10 | SHEET 48 OF 74

2:20 AM 10/5/2006 kevin.kim K:\Water Resources\91131\012\CADD\11012x07.dgn

Concrete Box Member Design Forces: STRUCTURE 5 - 10

Wall Information (Assumes design as a slab partiall fixed at the top and bottom slabs):

Wall Height: $h_{wall} := 10.0 \cdot ft$

Top Slab Thickness: $t_{tslab} := .833 \cdot ft$

Depth of Fill: $d_{fill} := 3.2 \cdot ft$

Height from btm wall to top of fill: $H := h_{wall} + t_{tslab} + d_{fill}$ $H = 14.033\ ft$

Per Geotechnical Report lateral load on walls is a uniform pressure since walls are restrained from moving.

Lateral Soil Pressure: $w_{soillat} := 20 \cdot H \cdot psf$ $w_{soillat} = 280.66\,plf$

Lateral Soil Pressure from Traffic Surcharge: $w_{soilsur} := 120 \cdot psf \cdot 1 \cdot ft$ $w_{soilsur} = 120\,plf$

Total Lateral Pressure on Wall: $w_{soil} := w_{soillat} + w_{soilsur}$

$w_{soil} = 400.66\,plf$

Positive Moment at Mid-span of wall (per AISC LRFD Beam Diagrams pg 4-190 & 4-195):

$$M_{midspan} := \frac{w_{soil} \cdot h_{wall}^2}{16} \qquad M_{midspan} = 2.504\,kft$$

$$M_{u\_midspan} := 1.3 \cdot M_{midspan} \qquad M_{u\_midspan} = 3.255\,kft$$

Negative Moment at End of wall (per AISC LRFD Beam Diagrams pg 4-195):

$$M_{endspan} := \frac{w_{soil} \cdot h_{wall}^2}{12} \qquad M_{endspan} = 3.339\,kft$$

$$M_{u\_endspan} := 1.3 \cdot M_{endspan} \qquad M_{u\_endspan} = 4.34\,kft$$

Shear at End of wall (per AISC LRFD Beam Diagrams pg 4-190):

$$V_{endwall} := \frac{w_{soil} \cdot h_{wall}}{2} \qquad V_{endwall} = 2.003\,kip$$

$$V_{u\_endwall} := 1.3 \cdot V_{endwall} \qquad V_{u\_endwall} = 2.604\,kip$$

Top Slab Information (Assumes design a one-way simple span):

Design Slab Span: $l_{slab} := 6.0 \cdot ft$

Design Slab Thickness: $t_{slab} := 10 \cdot in$

Depth of Fill: $d_{fill} := 3.2 \cdot ft$ $\quad$ $Impact := 1.00$

Unit Weight of Soil: $\gamma_{soil} := 125 \cdot pcf$

Truck Wheel Load (if applicable): $P := 4 \cdot kip$ $\quad$ Assume one 16 kip wheel load distributed over 4' width (AASHTO 3.24.3)

Truck Wheel Load distribution per AASHTO 6.4 (if fill depth > 2 feet):

Distribute load over square with sides of "dist": $dist := 1.75 \cdot d_{fill}$ $\quad$ $dist = 5.6\ ft$

Equivalent uniform truck wheel load: $p_{wheel\_pres} := \frac{P}{dist^2} \cdot ft$ $\quad$ $p_{wheel\_pres} = 0.128\,klf$

Note: For structures #5 to #10 assume wheel load is not distributed through soil since soil depth varies on the different structures.

Positive Moment at Midspan of Top Slab:

$$M_{DL} := \frac{\left(d_{fill} \cdot \gamma_{soil} + t_{slab} \cdot 150pcf\right) \cdot 1\,ft \cdot l_{slab}^2}{8} \qquad M_{DL} = 2.363\,kft$$

$$M_{LL} := \frac{P \cdot l_{slab}}{4} \qquad M_{LL} = 6\,kft$$

Modify equation based on fill depth - See above

$$M := M_{DL} + M_{LL} \cdot Impact \qquad M = 8.362\,kft$$

$$M_u := 1.3\left(1.0 \cdot M_{DL} + 1.67 \cdot M_{LL} \cdot Impact\right) \qquad M_u = 16.097\,kft$$

Shear at End of wall:

$$V_{DL} := \frac{\left(d_{fill} \cdot \gamma_{soil} + t_{slab} \cdot 150pcf\right) \cdot 1\,ft \cdot l_{slab}}{2} \qquad V_{DL} = 1.575\,kip$$

$$V_{LL} := P \qquad V_{LL} = 4\,kip$$

Modify equation based on fill depth - See above

$$V := V_{DL} + V_{LL} \cdot Impact \qquad V = 5.575\,kip$$

$$V_u := 1.3\left(1.0 \cdot V_{DL} + 1.67 \cdot V_{LL} \cdot Impact\right) \qquad V_u = 10.732\,kip$$

Bottom Slab Information (Assumes design a one-way simple span):

Design of bottom slab based on soil pressure. Soil pressure calculated assuming all loads are evenly distributed over the area of the bottom slab.

Design Bottom Slab Span: $l_{bslab} := 6.0 \cdot ft$

Design Bottom Slab Thickness: $t_{bslab} := 12 \cdot in$

Area of Top Slab $area_{tslab} := 84 \cdot ft^2$

Area of Bottom Slab $area_{bslab} := 84 \cdot ft^2$

Perimeter of Box Structure: $perim := 38 \cdot ft$

Design Wall Thickness: $t_{wall} := 10 \cdot in$

Design Wall Height: $h_{wall} := 10.0 \cdot ft$

Load from Fill on Top Slab:

$P_{fill} := d_{fill} \cdot \gamma_{soil} \cdot area_{tslab}$ $P_{fill} = 33.6\,kip$

Load from Truck Wheel Load on Top Slab:

$P := 16 \cdot kip$

Number of wheel loads that can be placed on tops slab: $Np := 2$

$P_{truck} := P \cdot Np$ $P_{truck} = 32\,kip$

Load from Top Slab Selfweight:

$P_{topslab} := t_{slab} \cdot 150 \cdot pcf \cdot area_{tslab}$ $P_{topslab} = 10.5\,kip$

Load from Wall Selfweight:

$P_{wall} := t_{wall} \cdot 150 \cdot pcf \cdot perim \cdot h_{wall}$ $P_{wall} = 47.5\,kip$

Ignore Bottom Slab Selfweight since it will cancel itself out in the design

Total Load for soil pressure calculations:

$P_{total} := P_{fill} + P_{truck} + P_{topslab} + P_{wall}$ $P_{total} = 123.6\,kip$

Soil Pressure for Design of Bottom Slab:

$$soilpres := \frac{P_{total}}{area_{bslab}} \qquad soilpres = 1.471\,ksf$$

Positive Moment at Midspan of Bottom Slab:

$$M := \frac{soilpres \cdot 1\,ft \cdot l_{bslab}^{2}}{8} \qquad M = 6.621\,kft$$

$$M_u := 1.3M \qquad M_u = 8.608\,kft$$

Shear at End of wall:

$$V := \frac{soilpres \cdot 1\,ft \cdot l_{bslab}}{2} \qquad V = 4.414\,kip$$

$$V_u := 1.3V \qquad V_u = 5.739\,kip$$

Kimley-Horn and Associates, Inc.

Job McDowell Road Subject Structure #5 - #10 Top Slab M+ Project No. 091131012

Designed by KJK Date 06/05/06 Checked by _____ Date _____

AASHTO 17th Edition LFD R/C Beam Design

REFERENCE: AASHTO 17th Edition, 2002

Note: Input parameters are in yellow highlight. Checks for adequacy are in blue highlight with border

Base Units: ft = 1L lb = 1M sec = 1T K = 1K lbf = force

Define Units: kips := 1000·lbf degF := 1·K ksi := 1000psi

DESIGN LOCATION: TOP SLAB M+

MATERIAL PROPERTIES:

CONCRETE :

$F'c := 3 \cdot ksi$ Concrete compressive strength

$z := 130 \frac{kips}{in}$ Quantity limiting distribution of flexural reinf. [AASHTO 8.16.8.4]

$W_c := .15 \cdot \frac{kips}{ft^3}$ [UNIT FORCE -- AASHTO 3.3.6]

REINFORCING STEEL :

$f_y := 60.0 \cdot ksi$ [Grade 60]

$f_s := 24.0 \cdot ksi$ [AASHTO 8.15.2.2 SERVICE LOAD]

$E_s := 29000ksi$ [AASHTO 8.7.2]

$\phi_m := .90$ Flexure - strength reduction factor [AASHTO 8.16.1.2.2]

$\phi_s := .85$ Shear - strength reduction factor [AASHTO 8.16.1.2.2]

CALCULATED MATERIAL PROPERTIES:

$fc := .4 \cdot F'c$ $\boxed{fc = 1.2ksi}$ [SERVICE LOAD]

$E_c := W_c^{1.5} \cdot 33 \cdot \sqrt{F'c} \cdot \left(\frac{ft^3}{lbf}\right)^{1.5} \cdot \sqrt{psi}$ $\boxed{E_c = 3320.56\,ksi}$ Elastic Modulus for concrete [AASHTO 8.7.1]

$n := floor\left(\frac{E_s}{E_c}\right) + if\left[.5 > \left(\frac{E_s}{E_c}\right) - floor\left(\frac{E_s}{E_c}\right), 0, 1\right]$ $\boxed{n = 9}$ Modular Ratio [AASHTO 8.15.3.4]

$\beta_1 := if\left[F'c \le 4. \cdot ksi, .85, .85 - (F'c - 4 \cdot ksi) \cdot .05 \cdot \frac{1}{ksi}\right]$ $\boxed{\beta_1 = 0.85}$ FOR F'c < 4ksi β_1 = .85 [AASHTO 8.16.2.7]

DESIGN LOADS:

LOAD FACTOR	SERVICE LOAD	
$Mu := 16.1 \cdot kips \cdot ft$	$M_{max} := 8.5 \cdot kips \cdot ft$	Use service load to check serviceabilty requirements
$Vu := 10.8 \cdot kips$	$M_{min} := 2.4 \cdot kips \cdot ft$	

GEOMETRY:

$b := 1 \cdot ft$ Width of compression flange $depth := .833 \cdot ft$ Gross depth of section

REINFORCING STEEL:

$cover := 2 \cdot in$ Clear cover to stirrups [AASHTO 8.22.1]

Use # $bar := 6$ **--- Moment reinforcement**

$AsNo := 2$ Total number of bars used Total Area of Reinforcing steel

$A_{bar} = 0.44\ in^2$ Bar area $As\_a := AsNo \cdot A_{bar}$

$diam_{bar} = 0.75\ in$ Bar dia. $As\_a = 0.88\ in^2$ Total area of flexure reinforcing

Use # $bar_s := 0$ **--- Shear reinforcement**

$AsNo_s := 0$ Total number of legs used Total Area of Reinforcing steel

$A_{bar_s} = 0\ in^2$ Bar area $As\_a_s := AsNo_s \cdot A_{bar_s}$

$diam_{bar_s} = 0\ in$ Bar dia. $As\_a_s = 0\ in^2$ Total area of shear reinforcing

Calc. the dc & d to tension reinf.:

$dc := cover + diam_{bar_s} + \frac{diam_{bar}}{2}$ $dc = 2.38\ in$ Distance from the tension face to centroid of first layer of tension reinf.

$d := depth - dc$ $\boxed{d = 7.62\ in}$ Distance from compression face to centroid of tension reinf.

ULTIMATE MOMENT CAPACITY: [AASHTO 8.16.3.1]

$a := As\_a \cdot \frac{f_y}{.85 \cdot F'c \cdot b}$ $a = 1.73\ in$

$\phi Mn := \phi_m \left[As\_a \cdot f_y \cdot \left(d - \frac{a}{2} \right) \right]$ $\boxed{\phi Mn = 26.76\ kips \cdot ft}$ > $\boxed{Mu = 16.10\ kips \cdot ft}$

MAX. FLEXURE REINF. [AASHTO 8.16.3.1.1]

$$\rho_{bal} := \frac{0.85 \cdot \beta_1 \cdot F'c}{f_y} \cdot \frac{87000 \cdot psi}{87000 \cdot psi + f_y} \qquad \rho_{bal} = 0.02138$$

$$\rho := \frac{As\_a}{b \cdot d} \qquad \rho = 0.00962 \qquad .75 \cdot \rho_{bal} = 0.01604 \quad > \quad \rho = 0.00962$$

MIN. FLEXURE REINF. [AASHTO 8.17.1.1]

$$Mc := \frac{b \cdot depth^2}{6} \cdot 7.5 \cdot \sqrt{psi} \cdot \sqrt{F'c} \qquad Mc = 6.84\ kips \cdot ft$$

CRACKING MOMENT on the basis of the modulus of rupture for normal weight concrete [AASHTO 8.15.2.1.1]

$\phi Mn = 26.76\ kips \cdot ft \quad > \quad 1.2 \cdot Mc = 8.21\ kips \cdot ft$

OR

[AASHTO 8.17.1.2] $\phi Mn = 26.76\ kips \cdot ft \quad > \quad 1.33 Mu = 21.41\ kips \cdot ft$

SERVICEABILITY REQUIREMENTS [AASHTO 8.16.8] - Use as general Check

$$k := \sqrt{2 \cdot n \cdot \rho + (n \cdot \rho)^2} - n \cdot \rho \qquad j := 1 - \frac{k}{3} \qquad k = 0.3385 \qquad j = 0.8872$$

$$fs_{max} := \frac{M_{max}}{As\_a \cdot j \cdot d} \qquad fs_{min} := \frac{M_{min}}{As\_a \cdot j \cdot d} \qquad fc_{max} := fs_{max} \cdot \frac{k}{n \cdot (1 - k)}$$

$fs_{max} = 17.14\ ksi \quad < \quad f_s = 24\ ksi$

$fs_{min} = 4.84\ ksi$

$fc_{max} = 0.97\ ksi \quad < \quad fc = 1.2\ ksi$

FATIGUE STRESS LIMITS [AASHTO 8.16.8.3]

$rh := .3$ (r/h) of .3 is used as a default

$f_f := 21. \cdot ksi - 0.33 \cdot fs_{min} + 8. \cdot ksi \cdot rh \qquad f_f = 21.8\ ksi \quad > \quad (fs_{max} - fs_{min}) = 12.3\ ksi$

Max. stress range for reinf. steel

DISTRIBUTION OF FLEXURAL REINFORCEMENT [AASHTO 8.16.8.4]

$dc := if[cover > 2 \cdot in, dc - (cover - 2 \cdot in), dc] \qquad dc = 2.38\ in$ Use max. cover as 2"

$$A := \frac{2 \cdot dc \cdot b}{AsNo} \qquad A = 28.5\ in^2 \qquad f_{s\_z} := \frac{z}{(dc \cdot A)^{\frac{1}{3}}} \qquad f_{s\_z} = 31.9\ ksi$$

Effective tension area of conc. surrounding 1 bar
-- formula for 1 layer of steel

$f_{s\_df} := if(f_{s\_z} \le .6 \cdot f_y, f_{s\_z}, .6 \cdot f_y) \qquad f_{s\_df} = 31.9\ ksi \quad > \quad fs_{max} = 17.14\ ksi$

SHEAR STRENGTH [AASHTO 8.16.6.1.1]

Per AASHTO 3.24.4: Slabs designed for bending moment in accordance with Article 3.24.3 shall be considered satisfactory in bond and shear. Therefore, shear check is not required.

$Vu_{reqd} := \frac{Vu}{\phi_s}$ $\quad Vu_{reqd} = 12.71\,kips$

Shear Strength Provided by Concrete [AASHTO 8.16.6.2.1] (Assumes a rect. section)

$factor := \frac{Vu \cdot d}{Mu}$ $\quad factor = 0.43$ $\quad factor := if(factor > 1., 1., factor)$ $\quad factor = 0.43$

$Fv_c := \begin{bmatrix} (1.9 \cdot \sqrt{psi} \cdot \sqrt{F'c} + 2500 \cdot psi \cdot \rho \cdot factor) \\ 2 \cdot \sqrt{psi} \cdot \sqrt{F'c} \end{bmatrix}$ $\quad Fv_c = \begin{pmatrix} 114.32 \\ 109.54 \end{pmatrix} psi$

$Fvmax := 3.5 \cdot (\sqrt{psi} \cdot \sqrt{F'c})$ $\quad Fvmax = 191.7\,psi$

$Fvc := if(max(Fv_c) < Fvmax, max(Fv_c), Fvmax)$ $\quad Fvc = 114.32\,psi$ $\quad$ concrete shear strength

$Vc := Fvc \cdot b \cdot d$ $\quad Vc = 10.45\,kips$ $\quad$ shear carried by concrete

IF $Vc = 10.45\,kips$ > $Vu_{reqd} = 12.71\,kips$ $\quad$ No Shear reinf. required [AASHTO 8.19.1]

If Shear Reinforcing is required [AASHTO 8.16.6.3]

$Vs_{reqd} := if(Vu_{reqd} - Vc < 0. \cdot kips, 0.000001 \cdot kips, Vu_{reqd} - Vc)$ $\quad Vs_{reqd} = 2.25\,kips$

Max. shear reinf. spacing [AASHTO 8.19.1.2], AASHTO 8.19.3]

$smax := \begin{pmatrix} \frac{As\_a_s \cdot f_y}{50 \cdot psi \cdot b} \\ 24 \cdot in \\ \frac{d}{2} \end{pmatrix}$ $\quad smax = \begin{pmatrix} 0 \\ 24 \\ 3.81 \end{pmatrix} in$ $\quad smax := min(smax)$ $\quad smax = 0\,in$

max stirrup spacing

Reduction for max spacing for high shear reinf. requirement: [AASHTO 8.16.6.3.8]

IF $Vs_{reqd} = 2.25\,kips$ > $4 \cdot \sqrt{psi} \cdot \sqrt{F'c} \cdot b \cdot d = 20.04\,kips$ Then reduce max. spacing by 1/2

$s_{max} := if(Vs_{reqd} > 4 \cdot \sqrt{psi} \cdot \sqrt{F'c} \cdot b \cdot d, .5 \cdot smax, smax)$ $\quad s_{max} = 0\,in$

Max steel shear strength allowed: [AASHTO 8.16.6.3.9]

$Vs_{reqd} = 2.25\,kips$ < $8 \cdot \sqrt{psi} \cdot \sqrt{F'c} \cdot b \cdot d = 40.07\,kips$

Stirrup Spacing: [AASHTO 8.16.6.3]

$s := \frac{As\_a_s \cdot f_y \cdot d}{Vs_{reqd}}$ $\quad s = 0\,in$

$s_{reqd} := if(s > s_{max}, s_{max}, s)$ $\quad$ Max. Stirrup spacing: $s_{reqd} = 0\,in$

CHECK CRACK CONTROL -- [AASHTO 17.6.4.7]

$d = 7.62\,in$ Distance from compression face to centroid of tension reinf.

$d_c := cover + 0.5 \cdot diam_{bar}$ Thickness of cover from tension fiber to center of tension reinf.

$\beta := 1 + \frac{d_c}{.7 \cdot (d)}$ $\beta = 1.45$ $A = 28.5\,in^2$ Effective tension area of conc. surrounding 1 bar. (1 layer of steel)

$f_s := \frac{155}{\beta \cdot \sqrt[3]{d_c \cdot A}} \cdot \frac{kip}{in}$ $fs_{ck} := if(f_s \le .6 \cdot f_y, f_s, .6 \cdot f_y)$

$f_s = 26.32\,ksi$ $fs_{ck} = 26.32\,ksi$ $\frac{fs_{ck}}{fs_{max}} = 1.54$ > 1.0

Kimley-Horn and Associates, Inc.

Job McDowell Road Subject Structure #5 - #10 Walls M+ Project No. 091131012

Designed by KJK Date 06/05/06 Checked by_____ Date_____

AASHTO 17th Edition LFD R/C Beam Design

REFERENCE: AASHTO 17th Edition, 2002

Note: Input parameters are in yellow highlight. Checks for adequacy are in blue highlight with border

Base Units: ft = 1L lb = 1M sec = 1T K = 1K lbf = force

Define Units: kips := 1000·lbf degF := 1·K ksi := 1000psi

DESIGN LOCATION: WALLS M+

MATERIAL PROPERTIES:

CONCRETE :

$F'c := 3 \cdot ksi$ Concrete compressive strength

$z := 130 \frac{kips}{in}$ Quantity limiting distribution of flexural reinf. [AASHTO 8.16.8.4]

$W_c := .15 \cdot \frac{kips}{ft^3}$ [UNIT FORCE -- AASHTO 3.3.6]

REINFORCING STEEL :

$f_y := 60.0 \cdot ksi$ [Grade 60]

$f_s := 24.0 \cdot ksi$ [AASHTO 8.15.2.2 SERVICE LOAD]

$E_s := 29000ksi$ [AASHTO 8.7.2]

$\phi_m := .90$ Flexure - strength reduction factor [AASHTO 8.16.1.2.2]

$\phi_s := .85$ Shear - strength reduction factor [AASHTO 8.16.1.2.2]

CALCULATED MATERIAL PROPERTIES:

$fc := .4 \cdot F'c$ $fc = 1.2ksi$ [SERVICE LOAD]

$E_c := W_c^{1.5} \cdot 33 \cdot \sqrt{F'c} \cdot \left(\frac{ft^3}{lbf}\right)^{1.5} \cdot \sqrt{psi}$ $E_c = 3320.56\,ksi$ Elastic Modulus for concrete [AASHTO 8.7.1]

$n := floor\left(\frac{E_s}{E_c}\right) + if\left[.5 > \left(\frac{E_s}{E_c}\right) - floor\left(\frac{E_s}{E_c}\right), 0, 1\right]$ $n = 9$ Modular Ratio [AASHTO 8.15.3.4]

$\beta_1 := if\left[F'c \le 4 \cdot ksi, .85, .85 - (F'c - 4 \cdot ksi) \cdot .05 \cdot \frac{1}{ksi}\right]$ $\beta_1 = 0.85$ FOR F'c < 4ksi β_1 = .85 [AASHTO 8.16.2.7]

DESIGN LOADS:

LOAD FACTOR	SERVICE LOAD	
$Mu := 4 \cdot kips \cdot ft$	$M_{max} := 3 \cdot kips \cdot ft$	Use service load to check serviceabilty requirements
$Vu := 3 \cdot kips$	$M_{min} := 3 \cdot kips \cdot ft$	

GEOMETRY:

$b := 1 \cdot ft$ Width of compression flange $depth := .833 \cdot ft$ Gross depth of section

REINFORCING STEEL:

$cover := 2 \cdot in$ Clear cover to stirrups [AASHTO 8.22.1]

Use # $bar := 6$ **--- Moment reinforcement**

$AsNo := 1$ Total number of bars used Total Area of Reinforcing steel

$A_{bar} = 0.44\ in^2$ Bar area $As\_a := AsNo \cdot A_{bar}$

$diam_{bar} = 0.75\ in$ Bar dia. $As\_a = 0.44\ in^2$ Total area of flexure reinforcing

Use # $bar_s := 0$ **--- Shear reinforcement**

$AsNo_s := 0$ Total number of legs used Total Area of Reinforcing steel

$A_{bar_s} = 0\ in^2$ Bar area $As\_a_s := AsNo_s \cdot A_{bar_s}$

$diam_{bar_s} = 0\ in$ Bar dia. $As\_a_s = 0\ in^2$ Total area of shear reinforcing

Calc. the dc & d to tension reinf.:

$dc := cover + diam_{bar_s} + \frac{diam_{bar}}{2}$ $dc = 2.38\ in$ Distance from the tension face to centroid of first layer of tension reinf.

$d := depth - dc$ $\boxed{d = 7.62\ in}$ Distance from compression face to centroid of tension reinf.

ULTIMATE MOMENT CAPACITY: [AASHTO 8.16.3.1]

$a := As\_a \cdot \frac{f_y}{.85 \cdot F'c \cdot b}$ $a = 0.86\ in$

$\phi Mn := \phi_m \cdot \left[As\_a \cdot f_y \cdot \left(d - \frac{a}{2} \right) \right]$ $\boxed{\phi Mn = 14.24\ kips \cdot ft}$ > $\boxed{Mu = 4.00\ kips \cdot ft}$

MAX. FLEXURE REINF. [AASHTO 8.16.3.1.1]

$$\rho_{bal} := \frac{0.85 \cdot \beta_1 \cdot F'c}{f_y} \cdot \frac{87000 \cdot psi}{87000 \cdot psi + f_y} \qquad \rho_{bal} = 0.02138$$

$$\rho := \frac{As\_a}{b \cdot d} \qquad \rho = 0.00481 \qquad .75 \cdot \rho_{bal} = 0.01604 \quad > \quad \rho = 0.00481$$

MIN. FLEXURE REINF. [AASHTO 8.17.1.1]

$$Mc := \frac{b \cdot depth^2}{6} \cdot 7.5 \cdot \sqrt{psi} \cdot \sqrt{F'c} \qquad Mc = 6.84\,kips \cdot ft$$

CRACKING MOMENT on the basis of the modulus of rupture for normal weight concrete [AASHTO 8.15.2.1.1]

$$\phi Mn = 14.24\,kips \cdot ft \quad > \quad 1.2 \cdot Mc = 8.21\,kips \cdot ft$$

OR

[AASHTO 8.17.1.2] $\phi Mn = 14.24\,kips \cdot ft \quad > \quad 1.33 Mu = 5.32\,kips \cdot ft$

SERVICEABILITY REQUIREMENTS [AASHTO 8.16.8] - Use as general Check

$$k := \sqrt{2 \cdot n \cdot \rho + (n \cdot \rho)^2} - n \cdot \rho \qquad j := 1 - \frac{k}{3} \qquad k = 0.2542 \qquad j = 0.9153$$

$$fs_{max} := \frac{M_{max}}{As\_a \cdot j \cdot d} \qquad fs_{min} := \frac{M_{min}}{As\_a \cdot j \cdot d} \qquad fc_{max} := fs_{max} \cdot \frac{k}{n \cdot (1 - k)}$$

$$fs_{max} = 11.73\,ksi \quad < \quad f_s = 24\,ksi$$

$$fs_{min} = 11.73\,ksi$$

$$fc_{max} = 0.44\,ksi \quad < \quad fc = 1.2\,ksi$$

FATIGUE STRESS LIMITS [AASHTO 8.16.8.3]

$rh := .3$ (r/h) of .3 is used as a default

$$f_f := 21.\cdot ksi - 0.33 \cdot fs_{min} + 8.\cdot ksi \cdot rh \qquad f_f = 19.53\,ksi \quad > \quad (fs_{max} - fs_{min}) = 0\,ksi$$

Max. stress range for reinf. steel

DISTRIBUTION OF FLEXURAL REINFORCEMENT [AASHTO 8.16.8.4]

$dc := if[cover > 2 \cdot in, dc - (cover - 2 \cdot in), dc]$ $\qquad dc = 2.38\,in$ $\qquad$ Use max. cover as 2"

$$A := \frac{2 \cdot dc \cdot b}{AsNo} \qquad A = 57\,in^2 \qquad f_{s\_z} := \frac{z}{(dc \cdot A)^{\frac{1}{3}}} \qquad f_{s\_z} = 25.32\,ksi$$

Effective tension area of conc. surrounding 1 bar
-- formula for 1 layer of steel

$$f_{s\_df} := if(f_{s\_z} \le .6 \cdot f_y, f_{s\_z}, .6 \cdot f_y) \qquad f_{s\_df} = 25.32\,ksi \quad > \quad fs_{max} = 11.73\,ksi$$

SHEAR STRENGTH [AASHTO 8.16.6.1.1]

$Vu_{reqd} := \frac{Vu}{\phi_s}$ $\boxed{Vu_{reqd} = 3.53\,kips}$

Shear Strength Provided by Concrete [AASHTO 8.16.6.2.1] (Assumes a rect. section)

$factor := \frac{Vu \cdot d}{Mu}$ $factor = 0.48$ $factor := if(factor > 1., 1., factor)$ $factor = 0.48$

$Fv_c := \begin{bmatrix} (1.9 \cdot \sqrt{psi} \cdot \sqrt{F'c} + 2500 \cdot psi \cdot \rho \cdot factor) \\ 2 \cdot \sqrt{psi} \cdot \sqrt{F'c} \end{bmatrix}$ $Fv_c = \begin{pmatrix} 109.8 \\ 109.54 \end{pmatrix} psi$

$Fvmax := 3.5 \cdot (\sqrt{psi} \cdot \sqrt{F'c})$ $Fvmax = 191.7\,psi$

$Fvc := if(max(Fv_c) < Fvmax, max(Fv_c), Fvmax)$ $Fvc = 109.8\,psi$ concrete shear strength

$Vc := Fvc \cdot b \cdot d$ $\boxed{Vc = 10.04\,kips}$ shear carried by concrete

IF $\boxed{Vc = 10.04\,kips}$ > $\boxed{Vu_{reqd} = 3.53\,kips}$ $\boxed{\text{No Shear reinf. required [AASHTO 8.19.1]}}$

If Shear Reinforcing is required [AASHTO 8.16.6.3]

$Vs_{reqd} := if(Vu_{reqd} - Vc < 0. \cdot kips, 0.000001 \cdot kips, Vu_{reqd} - Vc)$ $\boxed{Vs_{reqd} = 0\,kips}$

Max. shear reinf. spacing [AASHTO 8.19.1.2], AASHTO 8.19.3]

$smax := \begin{pmatrix} \frac{As\_a_s \cdot f_y}{50 \cdot psi \cdot b} \\ 24 \cdot in \\ \frac{d}{2} \end{pmatrix}$ $smax = \begin{pmatrix} 0 \\ 24 \\ 3.81 \end{pmatrix} in$ $smax := min(smax)$ $\boxed{smax = 0\,in}$

max stirrup spacing

Reduction for max spacing for high shear reinf. requirement: [AASHTO 8.16.6.3.8]

IF $\boxed{Vs_{reqd} = 0\,kips}$ > $\boxed{4 \cdot \sqrt{psi} \cdot \sqrt{F'c} \cdot b \cdot d = 20.04\,kips}$ Then reduce max. spacing by 1/2

$s_{max} := if(Vs_{reqd} > 4 \cdot \sqrt{psi} \cdot \sqrt{F'c} \cdot b \cdot d, .5 \cdot smax, smax)$ $\boxed{s_{max} = 0\,in}$

Max steel shear strength allowed: [AASHTO 8.16.6.3.9]

$\boxed{Vs_{reqd} = 0\,kips}$ < $\boxed{8 \cdot \sqrt{psi} \cdot \sqrt{F'c} \cdot b \cdot d = 40.07\,kips}$

Stirrup Spacing: [AASHTO 8.16.6.3]

$s := \frac{As\_a_s \cdot f_y \cdot d}{Vs_{reqd}}$ $s = 0\,in$

$s_{reqd} := if(s > s_{max}, s_{max}, s)$ Max. Stirrup spacing: $\boxed{s_{reqd} = 0\,in}$

CHECK CRACK CONTROL -- [AASHTO 8.16.8.4]

$d = 7.62\,in$ Distance from compression face to centroid of tension reinf.

$d_c := cover + 0.5 \cdot diam_{bar}$ Thickness of cover from tension fiber to center of tension reinf.

$\beta := 1 + \frac{d_c}{.7 \cdot (d)}$ $\beta = 1.45$ $A = 57\,in^2$ Effective tension area of conc. surrounding 1 bar. (1 layer of steel)

$f_s := \frac{155}{\beta \cdot \sqrt[3]{d_c \cdot A}} \cdot \frac{kip}{in}$ $fs_{ck} := if(f_s \le .6 \cdot f_y, f_s, .6 \cdot f_y)$

$f_s = 20.89\,ksi$ $fs_{ck} = 20.89\,ksi$ $\frac{fs_{ck}}{fs_{max}} = 1.78$ > 1.0

Kimley-Horn and Associates, Inc.

Job McDowell Road Subject Structure #5 - #10 Walls M- Project No. 091131012

Designed by KJK Date 06/05/06 Checked by _____ Date _____

AASHTO 17th Edition LFD R/C Beam Design

REFERENCE: AASHTO 17th Edition, 2002

Note: Input parameters are in yellow highlight. Checks for adequacy are in blue highlight with border

Base Units: ft = 1L lb = 1M sec = 1T K = 1K lbf = force

Define Units: kips := 1000·lbf degF := 1·K ksi := 1000psi

DESIGN LOCATION: WALLS M-

MATERIAL PROPERTIES:

CONCRETE :

$F'c := 3 \cdot ksi$ Concrete compressive strength

$z := 130 \frac{kips}{in}$ Quantity limiting distribution of flexural reinf. [AASHTO 8.16.8.4]

$W_c := 15 \cdot \frac{kips}{ft^3}$ [UNIT FORCE -- AASHTO 3.3.6]

REINFORCING STEEL :

$f_y := 60.0 \cdot ksi$ [Grade 60]

$f_s := 24.0 \cdot ksi$ [AASHTO 8.15.2.2 SERVICE LOAD]

$E_s := 29000ksi$ [AASHTO 8.7.2]

$\phi_m := .90$ Flexure - strength reduction factor [AASHTO 8.16.1.2.2]

$\phi_s := .85$ Shear - strength reduction factor [AASHTO 8.16.1.2.2]

CALCULATED MATERIAL PROPERTIES:

$fc := .4 \cdot F'c$

$fc = 1.2ksi$ [SERVICE LOAD]

$E_c := W_c^{1.5} \cdot 33 \cdot \sqrt{F'c} \cdot \left(\frac{ft^3}{lbf}\right)^{1.5} \cdot \sqrt{psi}$

$E_c = 3320.56\,ksi$ Elastic Modulus for concrete [AASHTO 8.7.1]

$n := floor\left(\frac{E_s}{E_c}\right) + if\left[.5 > \left(\frac{E_s}{E_c}\right) - floor\left(\frac{E_s}{E_c}\right), 0, 1\right]$

$n = 9$ Modular Ratio [AASHTO 8.15.3.4]

$\beta_1 := if\left[F'c \le 4.\cdot ksi, .85, .85 - (F'c - 4 \cdot ksi) \cdot .05 \cdot \frac{1}{ksi}\right]$

$\beta_1 = 0.85$ FOR $F'c < 4ksi$ $\beta_1 = .85$ [AASHTO 8.16.2.7]

DESIGN LOADS:

LOAD FACTOR	SERVICE LOAD	
$Mu := 5 \cdot kips \cdot ft$	$M_{max} := 4 \cdot kips \cdot ft$	Use service load to check serviceabilty requirements
$Vu := 3 \cdot kips$	$M_{min} := 4 \cdot kips \cdot ft$	

GEOMETRY:

$b := 1 \cdot ft$ Width of compression flange $depth := .833 \cdot ft$ Gross depth of section

REINFORCING STEEL:

$cover := 2 \cdot in$ Clear cover to stirrups [AASHTO 8.22.1]

Use # $bar := 6$ **--- Moment reinforcement**

$AsNo := 1$ Total number of bars used Total Area of Reinforcing steel

$A_{bar} = 0.44\ in^2$ Bar area $As\_a := AsNo \cdot A_{bar}$

$diam_{bar} = 0.75\ in$ Bar dia. $As\_a = 0.44\ in^2$ Total area of flexure reinforcing

Use # $bar_s := 0$ **--- Shear reinforcement**

$AsNo_s := 0$ Total number of legs used Total Area of Reinforcing steel

$A_{bar_s} = 0\ in^2$ Bar area $As\_a_s := AsNo_s \cdot A_{bar_s}$

$diam_{bar_s} = 0\ in$ Bar dia. $As\_a_s = 0\ in^2$ Total area of shear reinforcing

Calc. the dc & d to tension reinf.:

$dc := cover + diam_{bar_s} + \frac{diam_{bar}}{2}$ $dc = 2.38\ in$ Distance from the tension face to centroid of first layer of tension reinf.

$d := depth - dc$ $\boxed{d = 7.62\ in}$ Distance from compression face to centroid of tension reinf.

ULTIMATE MOMENT CAPACITY: [AASHTO 8.16.3.1]

$a := As\_a \cdot \frac{f_y}{.85 \cdot F'c \cdot b}$ $a = 0.86\ in$

$\phi Mn := \phi_m \cdot \left[As\_a \cdot f_y \cdot \left(d - \frac{a}{2} \right) \right]$ $\boxed{\phi Mn = 14.24\ kips \cdot ft}$ > $\boxed{Mu = 5.00\ kips \cdot ft}$

MAX. FLEXURE REINF. [AASHTO 8.16.3.1.1]

$$\rho_{bal} := \frac{0.85 \cdot \beta_1 \cdot F'c}{f_y} \cdot \frac{87000 \cdot psi}{87000 \cdot psi + f_y} \qquad \rho_{bal} = 0.02138$$

$$\rho := \frac{As\_a}{b \cdot d} \qquad \rho = 0.00481 \qquad .75 \cdot \rho_{bal} = 0.01604 \quad > \quad \rho = 0.00481$$

MIN. FLEXURE REINF. [AASHTO 8.17.1.1]

$$Mc := \frac{b \cdot depth^2}{6} \cdot 7.5 \cdot \sqrt{psi} \cdot \sqrt{F'c} \qquad Mc = 6.84\,kips \cdot ft$$

CRACKING MOMENT on the basis of the modulus of rupture for normal weight concrete [AASHTO 8.15.2.1.1]

$$\phi Mn = 14.24\,kips \cdot ft \quad > \quad 1.2 \cdot Mc = 8.21\,kips \cdot ft$$

OR

[AASHTO 8.17.1.2] $\phi Mn = 14.24\,kips \cdot ft \quad > \quad 1.33 Mu = 6.65\,kips \cdot ft$

SERVICEABILITY REQUIREMENTS [AASHTO 8.16.8] - Use as general Check

$$k := \sqrt{2 \cdot n \cdot \rho + (n \cdot \rho)^2} - n \cdot \rho \qquad j := 1 - \frac{k}{3} \qquad k = 0.2542 \qquad j = 0.9153$$

$$fs_{max} := \frac{M_{max}}{As\_a \cdot j \cdot d} \qquad fs_{min} := \frac{M_{min}}{As\_a \cdot j \cdot d} \qquad fc_{max} := fs_{max} \cdot \frac{k}{n \cdot (1 - k)}$$

$$fs_{max} = 15.64\,ksi \quad < \quad f_s = 24\,ksi$$

$$fs_{min} = 15.64\,ksi$$

$$fc_{max} = 0.59\,ksi \quad < \quad fc = 1.2\,ksi$$

FATIGUE STRESS LIMITS [AASHTO 8.16.8.3]

$rh := .3$ (r/h) of .3 is used as a default

$$f_f := 21.\,ksi - 0.33 \cdot fs_{min} + 8.\,ksi \cdot rh \qquad f_f = 18.24\,ksi \quad > \quad (fs_{max} - fs_{min}) = 0\,ksi$$

Max. stress range for reinf. steel

DISTRIBUTION OF FLEXURAL REINFORCEMENT [AASHTO 8.16.8.4]

$dc := if[cover > 2 \cdot in, dc - (cover - 2 \cdot in), dc]$ $\qquad dc = 2.38\,in$ $\qquad$ Use max. cover as 2"

$$A := \frac{2 \cdot dc \cdot b}{AsNo} \qquad A = 57\,in^2 \qquad f_{s\_z} := \frac{z}{(dc \cdot A)^{\frac{1}{3}}} \qquad f_{s\_z} = 25.32\,ksi$$

Effective tension area of conc. surrounding 1 bar
-- formula for 1 layer of steel

$$f_{s\_df} := if(f_{s\_z} \le .6 \cdot f_y, f_{s\_z}, .6 \cdot f_y) \qquad f_{s\_df} = 25.32\,ksi \quad > \quad fs_{max} = 15.64\,ksi$$

SHEAR STRENGTH [AASHTO 8.16.6.1.1]

$Vu_{reqd} := \frac{Vu}{\phi_s}$ $\boxed{Vu_{reqd} = 3.53\,kips}$

Shear Strength Provided by Concrete [AASHTO 8.16.6.2.1] (Assumes a rect. section)

$factor := \frac{Vu \cdot d}{Mu}$ $factor = 0.38$ $factor := if(factor > 1., 1., factor)$ $factor = 0.38$

$Fv_c := \begin{bmatrix} (1.9 \cdot \sqrt{psi} \cdot \sqrt{F'c} + 2500 \cdot psi \cdot \rho \cdot factor) \\ 2 \cdot \sqrt{psi} \cdot \sqrt{F'c} \end{bmatrix}$ $Fv_c = \begin{pmatrix} 108.65 \\ 109.54 \end{pmatrix} psi$

$Fvmax := 3.5 \cdot (\sqrt{psi} \cdot \sqrt{F'c})$ $Fvmax = 191.7\,psi$

$Fvc := if(max(Fv_c) < Fvmax, max(Fv_c), Fvmax)$ $Fvc = 109.54\,psi$ concrete shear strength

$Vc := Fvc \cdot b \cdot d$ $\boxed{Vc = 10.02\,kips}$ shear carried by concrete

IF $\boxed{Vc = 10.02\,kips}$ > $\boxed{Vu_{reqd} = 3.53\,kips}$ $\boxed{\text{No Shear reinf. required [AASHTO 8.19.1]}}$

If Shear Reinforcing is required [AASHTO 8.16.6.3]

$Vs_{reqd} := if(Vu_{reqd} - Vc < 0.\text{-}kips, 0.000001 \cdot kips, Vu_{reqd} - Vc)$ $\boxed{Vs_{reqd} = 0\,kips}$

Max. shear reinf. spacing [AASHTO 8.19.1.2], AASHTO 8.19.3]

$smax := \begin{pmatrix} \frac{As\_a_s \cdot f_y}{50 \cdot psi \cdot b} \\ 24 \cdot in \\ \frac{d}{2} \end{pmatrix}$ $smax = \begin{pmatrix} 0 \\ 24 \\ 3.81 \end{pmatrix} in$ $smax := min(smax)$ $\boxed{smax = 0\,in}$

max stirrup spacing

Reduction for max spacing for high shear reinf. requirement: [AASHTO 8.16.6.3.8]

IF $\boxed{Vs_{reqd} = 0\,kips}$ > $\boxed{4 \cdot \sqrt{psi} \cdot \sqrt{F'c} \cdot b \cdot d = 20.04\,kips}$ Then reduce max. spacing by 1/2

$s_{max} := if(Vs_{reqd} > 4 \cdot \sqrt{psi} \cdot \sqrt{F'c} \cdot b \cdot d, .5 \cdot smax, smax)$ $\boxed{s_{max} = 0\,in}$

Max steel shear strength allowed: [AASHTO 8.16.6.3.9]

$\boxed{Vs_{reqd} = 0\,kips}$ < $\boxed{8 \cdot \sqrt{psi} \cdot \sqrt{F'c} \cdot b \cdot d = 40.07\,kips}$

Stirrup Spacing: [AASHTO 8.16.6.3]

$s := \frac{As\_a_s \cdot f_y \cdot d}{Vs_{reqd}}$ $s = 0\,in$

$s_{reqd} := if(s > s_{max}, s_{max}, s)$ Max. Stirrup spacing: $\boxed{s_{reqd} = 0\,in}$

CHECK CRACK CONTROL – [AASHTO 17.6.4.7]

$d = 7.62\,in$ Distance from compression face to centroid of tension reinf.

$d_c := cover + 0.5 \cdot diam_{bar}$ Thickness of cover from tension fiber to center of tension reinf.

$\beta := 1 + \frac{d_c}{.7 \cdot (d)}$ $\beta = 1.45$ $A = 57\,in^2$ Effective tension area of conc. surrounding 1 bar. (1 layer of steel)

$f_s := \frac{155}{\beta \cdot \sqrt[3]{d_c \cdot A}} \cdot \frac{kip}{in}$ $fs_{ck} := if(f_s \le .6 \cdot f_y, f_s, .6 \cdot f_y)$

$fs_{ck} = 20.89\,ksi$

$f_s = 20.89\,ksi$

$\boxed{\frac{fs_{ck}}{fs_{max}} = 1.34} > \boxed{1.0}$

Kimley-Horn and Associates, Inc.

Job McDowell Road Subject Structure #5 - #10 Btm Slab M+ Project No. 091131012

Designed by KJK Date 06/05/06 Checked by _____ Date _____

AASHTO 17th Edition LFD R/C Beam Design

REFERENCE: AASHTO 17th Edition, 2002

Note: Input parameters are in yellow highlight. Checks for adequacy are in blue highlight with border

Base Units: ft = 1L lb = 1M sec = 1T K = 1K lbf = force

Define Units: kips := 1000·lbf degF := 1·K ksi := 1000psi

DESIGN LOCATION: BTM SLAB M+

MATERIAL PROPERTIES:

CONCRETE :

$F'c := 3 \cdot ksi$ Concrete compressive strength

$z := 130 \frac{kips}{in}$ Quantity limiting distribution of flexural reinf. [AASHTO 8.16.8.4]

$W_c := .15 \cdot \frac{kips}{ft^3}$ [UNIT FORCE -- AASHTO 3.3.6]

REINFORCING STEEL :

$f_y := 60.0 \cdot ksi$ [Grade 60]

$f_s := 24.0 \cdot ksi$ [AASHTO 8.15.2.2 SERVICE LOAD]

$E_s := 29000ksi$ [AASHTO 8.7.2]

$\phi_m := .90$ Flexure - strength reduction factor [AASHTO 8.16.1.2.2]

$\phi_s := .85$ Shear - strength reduction factor [AASHTO 8.16.1.2.2]

CALCULATED MATERIAL PROPERTIES:

$fc := .4 \cdot F'c$ $fc = 1.2ksi$ [SERVICE LOAD]

$E_c := W_c^{1.5} \cdot 33 \cdot \sqrt{F'c} \cdot \left(\frac{ft^3}{lbf}\right)^{1.5} \cdot \sqrt{psi}$ $E_c = 3320.56\,ksi$ Elastic Modulus for concrete [AASHTO 8.7.1]

$n := floor\left(\frac{E_s}{E_c}\right) + if\left[.5 > \left(\frac{E_s}{E_c}\right) - floor\left(\frac{E_s}{E_c}\right), 0, 1\right]$ $n = 9$ Modular Ratio [AASHTO 8.15.3.4]

$\beta_1 := if\left[F'c \le 4 \cdot ksi, .85, .85 - (F'c - 4 \cdot ksi) \cdot .05 \cdot \frac{1}{ksi}\right]$ $\beta_1 = 0.85$ FOR $F'c < 4ksi$ $\beta_1 = .85$ [AASHTO 8.16.2.7]

DESIGN LOADS:

LOAD FACTOR	SERVICE LOAD	
$Mu := 10 \cdot kips \cdot ft$	$M_{max} := 7 \cdot kips \cdot ft$	Use service load to check serviceabilty requirements
$Vu := 6 \cdot kips$	$M_{min} := 7 \cdot kips \cdot ft$	

GEOMETRY:

$b := 1 \cdot ft$ Width of compression flange $depth := 1.0 \cdot ft$ Gross depth of section

REINFORCING STEEL:

$cover := 2 \cdot in$ Clear cover to stirrups [AASHTO 8.22.1]

Use # $bar := 6$ **--- Moment reinforcement**

$AsNo := 1$ Total number of bars used Total Area of Reinforcing steel

$A_{bar} = 0.44\ in^2$ Bar area $As\_a := AsNo \cdot A_{bar}$

$diam_{bar} = 0.75\ in$ Bar dia. $As\_a = 0.44\ in^2$ Total area of flexure reinforcing

Use # $bar_s := 0$ **--- Shear reinforcement**

$AsNo_s := 0$ Total number of legs used Total Area of Reinforcing steel

$A_{bar_s} = 0\ in^2$ Bar area $As\_a_s := AsNo_s \cdot A_{bar_s}$

$diam_{bar_s} = 0\ in$ Bar dia. $As\_a_s = 0\ in^2$ Total area of shear reinforcing

Calc. the dc & d to tension reinf.:

$dc := cover + diam_{bar_s} + \frac{diam_{bar}}{2}$ $dc = 2.38\ in$ Distance from the tension face to centroid of first layer of tension reinf.

$d := depth - dc$ $\boxed{d = 9.62\ in}$ Distance from compression face to centroid of tension reinf.

ULTIMATE MOMENT CAPACITY: [AASHTO 8.16.3.1]

$a := As\_a \cdot \frac{f_y}{.85 \cdot F'c \cdot b}$ $a = 0.86\ in$

$\phi Mn := \phi_m \cdot \left[As\_a \cdot f_y \cdot \left(d - \frac{a}{2} \right) \right]$ $\phi Mn = 18.2\ kips \cdot ft$ > $Mu = 10.00\ kips \cdot ft$

MAX. FLEXURE REINF. [AASHTO 8.16.3.1.1]

$$\rho_{bal} := \frac{0.85 \cdot \beta_1 \cdot F'c}{f_y} \cdot \frac{87000 \cdot psi}{87000 \cdot psi + f_y} \qquad \rho_{bal} = 0.02138$$

$$\rho := \frac{As\_a}{b \cdot d} \qquad \rho = 0.00381$$

$.75 \cdot \rho_{bal} = 0.01604$ > $\rho = 0.00381$

MIN. FLEXURE REINF. [AASHTO 8.17.1.1]

$$Mc := \frac{b \cdot depth^2}{6} \cdot 7.5 \cdot \sqrt{psi} \cdot \sqrt{F'c} \qquad Mc = 9.86\,kips \cdot ft$$

CRACKING MOMENT on the basis of the modulus of rupture for normal weight concrete [AASHTO 8.15.2.1.1]

$\phi Mn = 18.2\,kips \cdot ft$ > $1.2 \cdot Mc = 11.83\,kips \cdot ft$

OR

[AASHTO 8.17.1.2] $\phi Mn = 18.2\,kips \cdot ft$ > $1.33Mu = 13.3\,kips \cdot ft$

SERVICEABILITY REQUIREMENTS [AASHTO 8.16.8] - Use as general Check

$$k := \sqrt{2 \cdot n \cdot \rho + (n \cdot \rho)^2} - n \cdot \rho \qquad j := 1 - \frac{k}{3} \qquad k = 0.2298$$

$$j = 0.9234$$

$$fs_{max} := \frac{M_{max}}{As\_a \cdot j \cdot d} \qquad fs_{min} := \frac{M_{min}}{As\_a \cdot j \cdot d} \qquad fc_{max} := fs_{max} \cdot \frac{k}{n \cdot (1 - k)}$$

$fs_{max} = 21.48\,ksi$ < $f_s = 24\,ksi$

$fs_{min} = 21.48\,ksi$

$fc_{max} = 0.71\,ksi$ < $fc = 1.2\,ksi$

FATIGUE STRESS LIMITS [AASHTO 8.16.8.3]

$rh := .3$ (r/h) of .3 is used as a default

$$f_f := 21.\cdot ksi - 0.33 \cdot fs_{min} + 8.\cdot ksi \cdot rh$$

$f_f = 16.31\,ksi$ > $(fs_{max} - fs_{min}) = 0\,ksi$

Max. stress range for reinf. steel

DISTRIBUTION OF FLEXURAL REINFORCEMENT [AASHTO 8.16.8.4]

$dc := if[cover > 2 \cdot in, dc - (cover - 2 \cdot in), dc]$ $\qquad dc = 2.38\,in$ $\qquad$ Use max. cover as 2"

$$A := \frac{2 \cdot dc \cdot b}{AsNo} \qquad A = 57\,in^2 \qquad f_{s\_z} := \frac{z}{(dc \cdot A)^{\frac{1}{3}}} \qquad f_{s\_z} = 25.32\,ksi$$

Effective tension area of conc. surrounding 1 bar
-- formula for 1 layer of steel

$$f_{s\_df} := if(f_{s\_z} \le .6 \cdot f_y, f_{s\_z}, .6 \cdot f_y)$$

$f_{s\_df} = 25.32\,ksi$ > $fs_{max} = 21.48\,ksi$

SHEAR STRENGTH [AASHTO 8.16.6.1.1]

$Vu_{reqd} := \frac{Vu}{\phi_s}$ $\boxed{Vu_{reqd} = 7.06\,kips}$

Shear Strength Provided by Concrete [AASHTO 8.16.6.2.1] (Assumes a rect. section)

$factor := \frac{Vu \cdot d}{Mu}$ $factor = 0.48$ $factor := if(factor > 1., 1., factor)$ $factor = 0.48$

$Fv_c := \begin{bmatrix} (1.9 \cdot \sqrt{psi} \cdot \sqrt{F'c} + 2500 \cdot psi \cdot \rho \cdot factor) \\ 2 \cdot \sqrt{psi} \cdot \sqrt{F'c} \end{bmatrix}$ $Fv_c = \begin{pmatrix} 108.65 \\ 109.54 \end{pmatrix} psi$

$Fvmax := 3.5 \cdot (\sqrt{psi} \cdot \sqrt{F'c})$ $Fvmax = 191.7\,psi$

$Fvc := if(max(Fv_c) < Fvmax, max(Fv_c), Fvmax)$ $Fvc = 109.54\,psi$ concrete shear strength

$Vc := Fvc \cdot b \cdot d$ $\boxed{Vc = 12.65\,kips}$ shear carried by concrete

IF $\boxed{Vc = 12.65\,kips}$ > $\boxed{Vu_{reqd} = 7.06\,kips}$ $\boxed{\text{No Shear reinf. required [AASHTO 8.19.1]}}$

If Shear Reinforcing is required [AASHTO 8.16.6.3]

$Vs_{reqd} := if(Vu_{reqd} - Vc < 0. \cdot kips, 0.000001 \cdot kips, Vu_{reqd} - Vc)$ $\boxed{Vs_{reqd} = 0\,kips}$

Max. shear reinf. spacing [AASHTO 8.19.1.2], AASHTO 8.19.3]

$smax := \begin{pmatrix} \frac{As\_a_s \cdot f_y}{50 \cdot psi \cdot b} \\ 24 \cdot in \\ \frac{d}{2} \end{pmatrix}$ $smax = \begin{pmatrix} 0 \\ 24 \\ 4.81 \end{pmatrix} in$ $smax := min(smax)$ $\boxed{smax = 0\,in}$

max stirrup spacing

Reduction for max spacing for high shear reinf. requirement: [AASHTO 8.16.6.3.8]

IF $\boxed{Vs_{reqd} = 0\,kips}$ > $\boxed{4 \cdot \sqrt{psi} \cdot \sqrt{F'c} \cdot b \cdot d = 25.3\,kips}$ Then reduce max. spacing by 1/2

$s_{max} := if(Vs_{reqd} > 4 \cdot \sqrt{psi} \cdot \sqrt{F'c} \cdot b \cdot d, .5 \cdot smax, smax)$ $\boxed{s_{max} = 0\,in}$

Max steel shear strength allowed: [AASHTO 8.16.6.3.9]

$\boxed{Vs_{reqd} = 0\,kips}$ < $\boxed{8 \cdot \sqrt{psi} \cdot \sqrt{F'c} \cdot b \cdot d = 50.61\,kips}$

Stirrup Spacing: [AASHTO 8.16.6.3]

$s := \frac{As\_a_s \cdot f_y \cdot d}{Vs_{reqd}}$ $s = 0\,in$

$s_{reqd} := if(s > s_{max}, s_{max}, s)$ Max. Stirrup spacing: $\boxed{s_{reqd} = 0\,in}$

CHECK CRACK CONTROL -- [AASHTO 17.6.4.7]

$d = 9.62\,in$ Distance from compression face to centroid of tension reinf.

$d_c := cover + 0.5 \cdot diam_{bar}$ Thickness of cover from tension fiber to center of tension reinf.

$\beta := 1 + \frac{d_c}{.7 \cdot (d)}$ $\beta = 1.35$ $A = 57\,in^2$ Effective tension area of conc. surrounding 1 bar. (1 layer of steel)

$f_s := \frac{155}{\beta \cdot \sqrt[3]{d_c \cdot A}} \cdot \frac{kip}{in}$ $fs_{ck} := if(f_s \le .6 \cdot f_y, f_s, .6 \cdot f_y)$

$fs_{ck} = 22.32\,ksi$

$f_s = 22.32\,ksi$

$\frac{fs_{ck}}{fs_{max}} = 1.04$ > 1.0

STRUCTURE #11

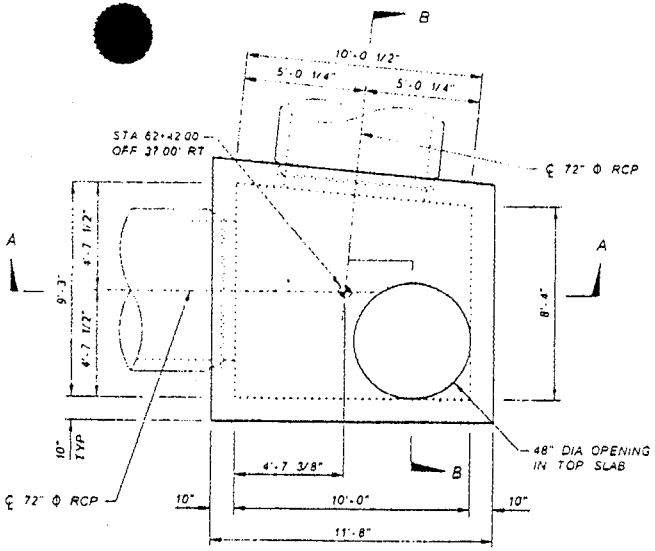

TOP PLAN
NTS

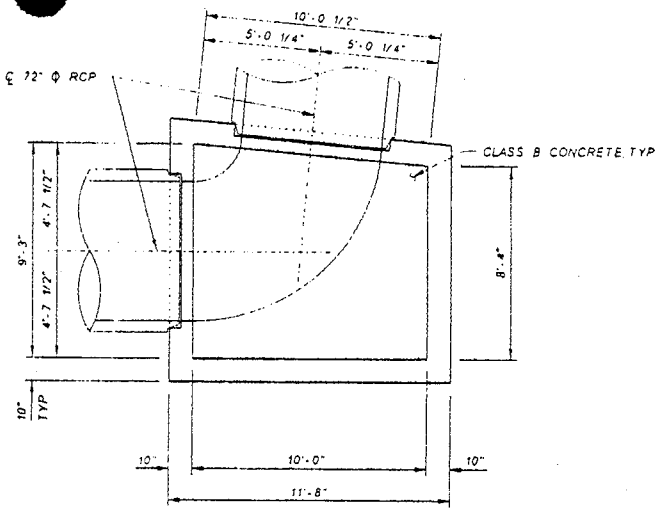

BOTTOM PLAN
NTS

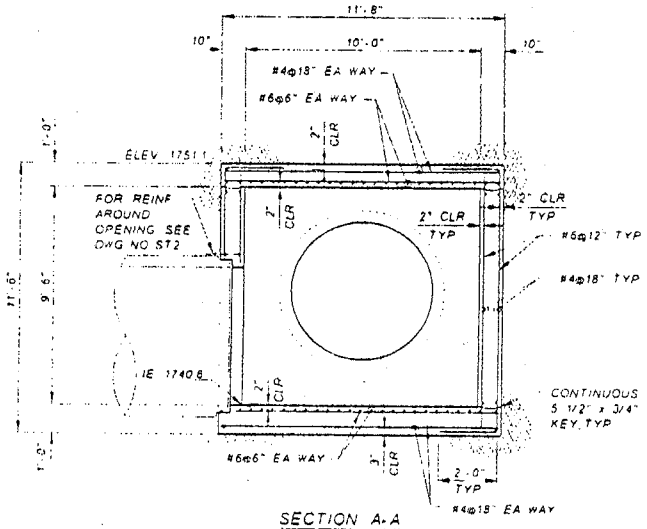

SECTION A-A
NTS

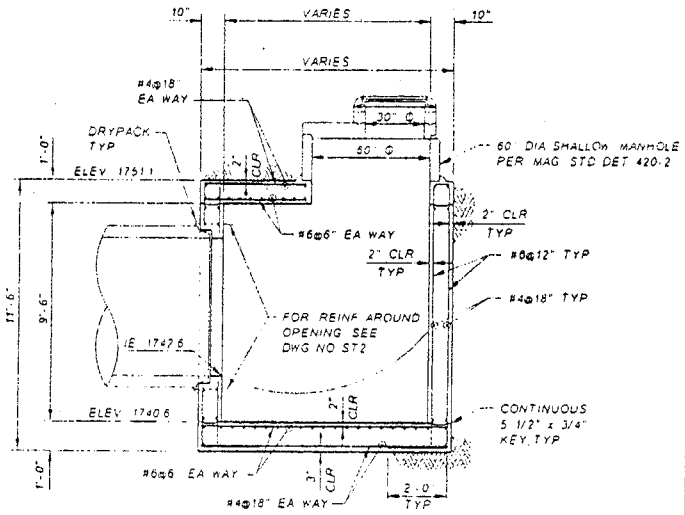

SECTION B-B
NTS

NO	REVISION	BY	DATE
3			
2			
1			

FLOOD CONTROL DISTRICT OF MARICOPA COUNTY
ENGINEERING DIVISION

MCDOWELL ROAD BASIN
AND STORM DRAIN PROJECT
PCN 420.03.31

	BY	DATE
DESIGNED	SMN	10/04/06
DRAWN	MSK	10/04/06
CHECKED	KJK/DJL	10/04/06

Kimley-Horn and Associates, Inc.

DRAWING NO ST2 | STRUCTURE #11 | SHEET 40 OF 74

1 AM 10/5/2006 kevin.kimm K:\Water\Resources\911\01\01\ACD\11\012\108.dwg

Concrete Box Member Design Forces: STRUCTURE 11

Wall Information (Assumes design as a slab partiall fixed at the top and bottom slabs):

Wall Height: $h_{wall} := 9.5 \cdot ft$

Top Slab Thickness: $t_{tslab} := 1.0 \cdot ft$

Depth of Fill: $d_{fill} := 2.0 \cdot ft$

Height from btm wall to top of fill: $H := h_{wall} + t_{tslab} + d_{fill}$

Per Geotechnical Report lateral load on walls is a uniform pressure since walls are restrained from moving.

Lateral Soil Pressure: $w_{soillat} := 20 \cdot H \cdot psf$ $\quad w_{soillat} = 250\,plf$

Lateral Soil Pressure from Traffic Surcharge: $w_{soilsur} := 120 \cdot psf \cdot 1 \cdot ft$ $\quad w_{soilsur} = 120\,plf$

Total Lateral Pressure on Wall: $w_{soil} := w_{soillat} + w_{soilsur}$

$w_{soil} = 370\,plf$

Positive Moment at Mid-span of wall (per AISC LRFD Beam Diagrams pg 4-190 & 4-195):

$$M_{midspan} := \frac{w_{soil} \cdot h_{wall}^2}{16} \qquad M_{midspan} = 2.087\,kft$$

$$M_{u\_midspan} := 1.3 \cdot M_{midspan} \qquad M_{u\_midspan} = 2.713\,kft$$

Negative Moment at End of wall (per AISC LRFD Beam Diagrams pg 4-195):

$$M_{endspan} := \frac{w_{soil} \cdot h_{wall}^2}{12} \qquad M_{endspan} = 2.783\,kft$$

$$M_{u\_endspan} := 1.3 \cdot M_{endspan} \qquad M_{u\_endspan} = 3.618\,kft$$

Shear at End of wall (per AISC LRFD Beam Diagrams pg 4-190):

$$V_{endwall} := \frac{w_{soil} \cdot h_{wall}}{2} \qquad V_{endwall} = 1.758\,kip$$

$$V_{u\_endwall} := 1.3 \cdot V_{endwall} \qquad V_{u\_endwall} = 2.285\,kip$$

Top Slab Information (Assumes design a one-way simple span):

Design Slab Span: $l_{slab} := 9 \cdot ft$

Design Slab Thickness: $t_{slab} := 12 \cdot in$

Depth of Fill: $d_{fill} := 2 \cdot ft$ $\quad$ $Impact := 1.20$

Unit Weight of Soil: $\gamma_{soil} := 125 \cdot pcf$

Truck Wheel Load (if applicable): $P := 4 \cdot kip$ $\quad$ Assume one 16 kip wheel load distributed over 4' width (AASHTO 3.24.3)

Truck Wheel Load distribution per AASHTO 6.4 (if fill depth > 2 feet):

Distribute load over square with sides of "dist": $dist := 1.75 \cdot d_{fill}$ $\quad$ $dist = 3.5\ ft$

Equivalent uniform truck wheel load: $p_{wheel\_pres} := \frac{P}{dist^2}$ $\quad$ $p_{wheel\_pres} = 0.327\,ksf$

Conservatively assume uniform wheel load over length of slab to account for any additional wheel loads that could be placed on the slab.

$p_{wheel} := p_{wheel\_pres} \cdot 1\,ft$ $\quad$ $p_{wheel} = 326.531\ ft\,psf$

Positive Moment at Midspan of Top Slab:

$$M_{DL} := \frac{\left(d_{fill} \cdot \gamma_{soil} + t_{slab} \cdot 150pcf\right) \cdot 1\,ft \cdot l_{slab}^2}{8} \qquad M_{DL} = 4.05\,kft$$

$$M_{LL} := \frac{P \cdot l_{slab}}{4} \qquad M_{LL} = 9\,kft$$

Modify equation based on fill depth - See above

$$M := M_{DL} + M_{LL} \cdot Impact \qquad M = 14.85\,kft$$

$$M_u := 1.3\left(1.0 \cdot M_{DL} + 1.67 \cdot M_{LL} \cdot Impact\right) \qquad M_u = 28.712\,kft$$

Shear at End of wall:

$$V_{DL} := \frac{\left(d_{fill} \cdot \gamma_{soil} + t_{slab} \cdot 150pcf\right) \cdot 1\,ft \cdot l_{slab}}{2} \qquad V_{DL} = 1.8\,kip$$

$$V_{LL} := P \qquad V_{LL} = 4\,kip$$

Modify equation based on fill depth - See above

$$V := V_{DL} + V_{LL} \cdot Impact \qquad V = 6.6\,kip$$

$$V_u := 1.3\left(1.0 \cdot V_{DL} + 1.67 \cdot V_{LL} \cdot Impact\right) \qquad V_u = 12.761\,kip$$

Bottom Slab Information (Assumes design a one-way simple span):

Design of bottom slab based on soil pressure. Soil pressure calculated assuming all loads are evenly distributed over the area of the bottom slab.

Design Bottom Slab Span: $l_{bslab} := 9 \cdot ft$

Design Bottom Slab Thickness: $t_{bslab} := 12 \cdot in$

Area of Top Slab $area_{tslab} := 130 \cdot ft^2$

Area of Bottom Slab $area_{bslab} := 130 \cdot ft^2$

Perimeter of Box Structure: $perim := 46 \cdot ft$

Design Wall Thickness: $t_{wall} := 10 \cdot in$

Design Wall Height: $h_{wall} := 9.5 \cdot ft$

Load from Fill on Top Slab:

$P_{fill} := d_{fill} \cdot \gamma_{soil} \cdot area_{tslab}$ $P_{fill} = 32.5\,kip$

Load from Truck Wheel Load on Top Slab:

$P := 16 \cdot kip$

Number of wheel loads that can be placed on tops slab: $N_P := 2$

$P_{truck} := P \cdot N_P$ $P_{truck} = 32\,kip$

Load from Top Slab Selfweight:

$P_{topslab} := t_{slab} \cdot 150 \cdot pcf \cdot area_{tslab}$ $P_{topslab} = 19.5\,kip$

Load from Wall Selfweight:

$P_{wall} := t_{wall} \cdot 150 \cdot pcf \cdot perim \cdot h_{wall}$ $P_{topslab} = 19.5\,kip$

Ignore Bottom Slab Selfweight since it will cancel itself out in the design

Total Load for soil pressure calculations:

$P_{total} := P_{fill} + P_{truck} + P_{topslab} + P_{wall}$ $P_{total} = 138.625\,kip$

Soil Pressure for Design of Bottom Slab:

$$soilpres := \frac{P_{total}}{area_{bslab}} \qquad soilpres = 1.066\,ksf$$

Positive Moment at Midspan of Bottom Slab:

$$M := \frac{soilpres \cdot 1\,ft \cdot l_{bslab}^{2}}{8} \qquad M = 10.797\,kft$$

$$M_u := 1.3M \qquad M_u = 14.036\,kft$$

Shear at End of wall:

$$V := \frac{soilpres \cdot 1\,ft \cdot l_{bslab}}{2} \qquad V = 4.799\,kip$$

$$V_u := 1.3V \qquad V_u = 6.238\,kip$$

Kimley-Horn and Associates, Inc.

Job McDowell Road Subject Structure #11 Top Slab M+ Project No. 091131012

Designed by KJK Date 06/05/06 Checked by _____ Date _____

AASHTO 17th Edition LFD R/C Beam Design

REFERENCE: AASHTO 17th Edition, 2002

Note: Input parameters are in yellow highlight. Checks for adequacy are in blue highlight with border

Base Units: ft = 1L lb = 1M sec = 1T K = 1K lbf = force

Define Units: kips := 1000·lbf degF := 1·K ksi := 1000psi

DESIGN LOCATION: TOP SLAB M+

MATERIAL PROPERTIES:

CONCRETE :

$F'c := 3 \cdot ksi$ Concrete compressive strength

$z := 130 \frac{kips}{in}$ Quantity limiting distribution of flexural reinf. [AASHTO 8.16.8.4]

$W_c := .15 \cdot \frac{kips}{ft^3}$ [UNIT FORCE -- AASHTO 3.3.6]

REINFORCING STEEL :

$f_y := 60.0 \cdot ksi$ [Grade 60]

$f_s := 24.0 \cdot ksi$ [AASHTO 8.15.2.2 SERVICE LOAD]

$E_s := 29000ksi$ [AASHTO 8.7.2]

$\phi_m := .90$ Flexure - strength reduction factor [AASHTO 8.16.1.2.2]

$\phi_s := .85$ Shear - strength reduction factor [AASHTO 8.16.1.2.2]

CALCULATED MATERIAL PROPERTIES:

$fc := .4 \cdot F'c$ $fc = 1.2ksi$ [SERVICE LOAD]

$E_c := W_c^{1.5} \cdot 33 \cdot \sqrt{F'c} \cdot \left(\frac{ft^3}{lbf}\right)^{1.5} \cdot \sqrt{psi}$ $E_c = 3320.56\,ksi$ Elastic Modulus for concrete [AASHTO 8.7.1]

$n := floor\left(\frac{E_s}{E_c}\right) + if\left[.5 > \left(\frac{E_s}{E_c}\right) - floor\left(\frac{E_s}{E_c}\right), 0, 1\right]$ $n = 9$ Modular Ratio [AASHTO 8.15.3.4]

$\beta_1 := if\left[F'c \le 4 \cdot ksi, .85, .85 - (F'c - 4 \cdot ksi) \cdot .05 \cdot \frac{1}{ksi}\right]$ $\beta_1 = 0.85$ FOR F'c < 4ksi $\beta_1 = .85$ [AASHTO 8.16.2.7]

DESIGN LOADS:

LOAD FACTOR	SERVICE LOAD	
$Mu := 29 \cdot kips \cdot ft$	$M_{max} := 15 \cdot kips \cdot ft$	Use service load to check serviceabilty requirements
$Vu := 12.8 \cdot kips$	$M_{min} := 5 \cdot kips \cdot ft$	

GEOMETRY:

$b := 1 \cdot ft$ Width of compression flange $depth := 1.0 \cdot ft$ Gross depth of section

REINFORCING STEEL:

$cover := 2 \cdot in$ Clear cover to stirrups [AASHTO 8.22.1]

Use # $bar := 6$ **--- Moment reinforcement**

$AsNo := 2$ Total number of bars used Total Area of Reinforcing steel

$A_{bar} = 0.44\ in^2$ Bar area $As\_a := AsNo \cdot A_{bar}$

$diam_{bar} = 0.75\ in$ Bar dia. $As\_a = 0.88\ in^2$ Total area of flexure reinforcing

Use # $bar_s := 0$ ***--- Shear reinforcement***

$AsNo_s := 0$ Total number of legs used Total Area of Reinforcing steel

$A_{bar_s} = 0\ in^2$ Bar area $As\_a_s := AsNo_s \cdot A_{bar_s}$

$diam_{bar_s} = 0\ in$ Bar dia. $As\_a_s = 0\ in^2$ Total area of shear reinforcing

Calc. the dc & d to tension reinf.:

$dc := cover + diam_{bar_s} + \frac{diam_{bar}}{2}$ $dc = 2.38\ in$ Distance from the tension face to centroid of first layer of tension reinf.

$d := depth - dc$ $\boxed{d = 9.62\ in}$ Distance from compression face to centroid of tension reinf.

ULTIMATE MOMENT CAPACITY: [AASHTO 8.16.3.1]

$a := As\_a \cdot \frac{f_y}{.85 \cdot F'c \cdot b}$ $a = 1.73\ in$

$\phi Mn := \phi_m \cdot \left[As\_a \cdot f_y \cdot \left(d - \frac{a}{2} \right) \right]$ $\boxed{\phi Mn = 34.7\ kips \cdot ft}$ > $\boxed{Mu = 29.00\ kips \cdot ft}$

MAX. FLEXURE REINF. [AASHTO 8.16.3.1.1]

$$\rho_{bal} := \frac{0.85 \cdot \beta_1 \cdot F'c}{f_y} \cdot \frac{87000 \cdot psi}{87000 \cdot psi + f_y} \qquad \rho_{bal} = 0.02138$$

$$\rho := \frac{As\_a}{b \cdot d} \qquad \rho = 0.00762 \qquad \boxed{.75 \cdot \rho_{bal} = 0.01604} > \boxed{\rho = 0.00762}$$

MIN. FLEXURE REINF. [AASHTO 8.17.1.1]

$$Mc := \frac{b \cdot depth^2}{6} \cdot 7.5 \cdot \sqrt{psi} \cdot \sqrt{F'c} \qquad Mc = 9.86\ kips \cdot ft$$

CRACKING MOMENT on the basis of the modulus of rupture for normal weight concrete [AASHTO 8.15.2.1.1]

$$\boxed{\phi Mn = 34.7\ kips \cdot ft} > \boxed{1.2 \cdot Mc = 11.83\ kips \cdot ft}$$

OR

[AASHTO 8.17.1.2] $\boxed{\phi Mn = 34.7\ kips \cdot ft} > \boxed{1.33 Mu = 38.57\ kips \cdot ft}$

SERVICEABILITY REQUIREMENTS [AASHTO 8.16.8] - Use as general Check

$$k := \sqrt{2 \cdot n \cdot \rho + (n \cdot \rho)^2} - n \cdot \rho \qquad j := 1 - \frac{k}{3} \qquad k = 0.3081$$

$$j = 0.8973$$

$$fs_{max} := \frac{M_{max}}{As\_a \cdot j \cdot d} \qquad fs_{min} := \frac{M_{min}}{As\_a \cdot j \cdot d} \qquad fc_{max} := fs_{max} \cdot \frac{k}{n \cdot (1 - k)}$$

$$\boxed{fs_{max} = 23.68\ ksi} < \boxed{f_s = 24\ ksi}$$

$$fs_{min} = 7.89\ ksi$$

$$\boxed{fc_{max} = 1.17\ ksi} < \boxed{fc = 1.2\ ksi}$$

FATIGUE STRESS LIMITS [AASHTO 8.16.8.3]

$rh := .3$ (r/h) of .3 is used as a default

$$f_f := 21 \cdot ksi - 0.33 \cdot fs_{min} + 8 \cdot ksi \cdot rh \qquad \boxed{f_f = 20.79\ ksi} > \boxed{(fs_{max} - fs_{min}) = 15.79\ ksi}$$

Max. stress range for reinf. steel

DISTRIBUTION OF FLEXURAL REINFORCEMENT [AASHTO 8.16.8.4]

$dc := if[cover > 2 \cdot in, dc - (cover - 2 \cdot in), dc]$ $\qquad dc = 2.38\ in$ $\qquad$ Use max. cover as 2"

$$A := \frac{2 \cdot dc \cdot b}{AsNo} \qquad A = 28.5\ in^2 \qquad f_{s\_z} := \frac{z}{(dc \cdot A)^{\frac{1}{3}}} \qquad f_{s\_z} = 31.9\ ksi$$

Effective tension area of conc. surrounding 1 bar
-- formula for 1 layer of steel

$$f_{s\_df} := if(f_{s\_z} \le .6 \cdot f_y, f_{s\_z}, .6 \cdot f_y) \qquad \boxed{f_{s\_df} = 31.9\ ksi} > \boxed{fs_{max} = 23.68\ ksi}$$

SHEAR STRENGTH [AASHTO 8.16.6.1.1]

$Vu_{reqd} := \frac{Vu}{\phi_s}$ $\boxed{Vu_{reqd} = 15.06\,kips}$

Per AASHTO 3.24.4: Slabs designed for bending moment in accordance with Article 3.24.3 shall be considered satisfactory in bond and shear. Therefore, shear check is not required.

Shear Strength Provided by Concrete [AASHTO 8.16.6.2.1] (Assumes a rect. section)

$factor := \frac{Vu \cdot d}{Mu}$ $factor = 0.35$ $factor := if(factor > 1., 1., factor)$ $factor = 0.35$

$Fv_c := \begin{bmatrix} (1.9 \cdot \sqrt{psi} \cdot \sqrt{F'c} + 2500 \cdot psi \cdot \rho \cdot factor) \\ 2 \cdot \sqrt{psi} \cdot \sqrt{F'c} \end{bmatrix}$ $Fv_c = \begin{pmatrix} 110.81 \\ 109.54 \end{pmatrix} psi$

$Fvmax := 3.5 \cdot (\sqrt{psi} \cdot \sqrt{F'c})$ $Fvmax = 191.7\,psi$

$Fvc := if(max(Fv_c) < Fvmax, max(Fv_c), Fvmax)$ $Fvc = 110.81\,psi$ concrete shear strength

$Vc := Fvc \cdot b \cdot d$ $\boxed{Vc = 12.8\,kips}$ shear carried by concrete

IF $\boxed{Vc = 12.8\,kips}$ > $\boxed{Vu_{reqd} = 15.06\,kips}$ $\boxed{\text{No Shear reinf. required [AASHTO 8.19.1]}}$

If Shear Reinforcing is required [AASHTO 8.16.6.3]

$Vs_{reqd} := if(Vu_{reqd} - Vc < 0. \cdot kips, 0.000001 \cdot kips, Vu_{reqd} - Vc)$ $\boxed{Vs_{reqd} = 2.26\,kips}$

Max. shear reinf. spacing [AASHTO 8.19.1.2], AASHTO 8.19.3]

$smax := \begin{pmatrix} \frac{As\_a_s \cdot f_y}{50 \cdot psi \cdot b} \\ 24 \cdot in \\ \frac{d}{2} \end{pmatrix}$ $smax = \begin{pmatrix} 0 \\ 24 \\ 4.81 \end{pmatrix} in$ $smax := min(smax)$ $\boxed{smax = 0\,in}$

max stirrup spacing

Reduction for max spacing for high shear reinf. requirement: [AASHTO 8.16.6.3.8]

IF $\boxed{Vs_{reqd} = 2.26\,kips}$ > $\boxed{4 \cdot \sqrt{psi} \cdot \sqrt{F'c} \cdot b \cdot d = 25.3\,kips}$ Then reduce max. spacing by 1/2

$s_{max} := if(Vs_{reqd} > 4 \cdot \sqrt{psi} \cdot \sqrt{F'c} \cdot b \cdot d, .5 \cdot smax, smax)$ $\boxed{s_{max} = 0\,in}$

Max steel shear strength allowed: [AASHTO 8.16.6.3.9]

$\boxed{Vs_{reqd} = 2.26\,kips}$ < $\boxed{8 \cdot \sqrt{psi} \cdot \sqrt{F'c} \cdot b \cdot d = 50.61\,kips}$

Stirrup Spacing: [AASHTO 8.16.6.3]

$s := \frac{As\_a_s \cdot f_y \cdot d}{Vs_{reqd}}$ $s = 0\,in$

$s_{reqd} := if(s > s_{max}, s_{max}, s)$ Max. Stirrup spacing: $\boxed{s_{reqd} = 0\,in}$

CHECK CRACK CONTROL – [AASHTO 17.6.4.7]

$d = 9.62\,in$ Distance from compression face to centroid of tension reinf.

$d_c := cover + 0.5 \cdot diam_{bar}$ Thickness of cover from tension fiber to center of tension reinf.

$\beta := 1 + \frac{d_c}{.7 \cdot (d)}$ $\beta = 1.35$ $A = 28.5\,in^2$ Effective tension area of conc. surrounding 1 bar. (1 layer of steel)

$f_s := \frac{155}{\beta \cdot \sqrt[3]{d_c \cdot A}} \cdot \frac{kip}{in}$ $fs_{ck} := if(f_s \le .6 \cdot f_y, f_s, .6 \cdot f_y)$

$f_s = 28.12\,ksi$ $fs_{ck} = 28.12\,ksi$ $\frac{fs_{ck}}{fs_{max}} = 1.19$ > 1.0

Kimley-Horn and Associates, Inc.

Job McDowell Road Subject Structure #11 Walls M+ Project No. 091131012

Designed by KJK Date 05/18/06 Checked by_____ Date_____

AASHTO 17th Edition LFD R/C Beam Design

REFERENCE: AASHTO 17th Edition, 2002

Note: Input parameters are in yellow highlight. Checks for adequacy are in blue highlight with border

Base Units: ft = 1L lb = 1M sec = 1T K = 1K lbf = force

Define Units: kips := 1000·lbf degF := 1·K ksi := 1000psi

DESIGN LOCATION: WALLS M+

MATERIAL PROPERTIES:

CONCRETE :

$F'c := 3 \cdot ksi$ Concrete compressive strength

$z := 130 \frac{kips}{in}$ Quantity limiting distribution of flexural reinf. [AASHTO 8.16.8.4]

$W_c := .15 \cdot \frac{kips}{ft^3}$ [UNIT FORCE -- AASHTO 3.3.6]

REINFORCING STEEL :

$f_y := 60.0 \cdot ksi$ [Grade 60]

$f_s := 24.0 \cdot ksi$ [AASHTO 8.15.2.2 SERVICE LOAD]

$E_s := 29000ksi$ [AASHTO 8.7.2]

$\phi_m := .90$ Flexure - strength reduction factor [AASHTO 8.16.1.2.2]

$\phi_s := .85$ Shear - strength reduction factor [AASHTO 8.16.1.2.2]

CALCULATED MATERIAL PROPERTIES:

$fc := .4 \cdot F'c$ $fc = 1.2ksi$ [SERVICE LOAD]

$E_c := W_c^{1.5} \cdot 33 \cdot \sqrt{F'c} \cdot \left(\frac{ft^3}{lbf}\right)^{1.5} \cdot \sqrt{psi}$ $E_c = 3320.56\,ksi$ Elastic Modulus for concrete [AASHTO 8.7.1]

$n := floor\left(\frac{E_s}{E_c}\right) + if\left[.5 > \left(\frac{E_s}{E_c}\right) - floor\left(\frac{E_s}{E_c}\right), 0, 1\right]$ $n = 9$ Modular Ratio [AASHTO 8.15.3.4]

$\beta_1 := if\left[F'c \le 4 \cdot ksi, .85, .85 - (F'c - 4 \cdot ksi) \cdot .05 \cdot \frac{1}{ksi}\right]$ $\beta_1 = 0.85$ FOR F'c < 4ksi $\beta_1 = .85$ [AASHTO 8.16.2.7]

DESIGN LOADS:

LOAD FACTOR	SERVICE LOAD	
$Mu := 3 \cdot kips \cdot ft$	$M_{max} := 2.1 \cdot kips \cdot ft$	Use service load to check serviceabilty requirements
$Vu := 2.5 \cdot kips$	$M_{min} := 2.1 \cdot kips \cdot ft$	

GEOMETRY:

$b := 1 \cdot ft$ Width of compression flange $depth := 0.833 \cdot ft$ Gross depth of section

REINFORCING STEEL:

$cover := 2 \cdot in$ Clear cover to stirrups [AASHTO 8.22.1]

Use # $bar := 6$ **--- Moment reinforcement**

$AsNo := 1$ Total number of bars used Total Area of Reinforcing steel

$A_{bar} = 0.44\ in^2$ Bar area $As\_a := AsNo \cdot A_{bar}$

$diam_{bar} = 0.75\ in$ Bar dia. $As\_a = 0.44\ in^2$ Total area of flexure reinforcing

Use # $bar_s := 0$ **--- Shear reinforcement**

$AsNo_s := 0$ Total number of legs used Total Area of Reinforcing steel

$A_{bar_s} = 0\ in^2$ Bar area $As\_a_s := AsNo_s \cdot A_{bar_s}$

$diam_{bar_s} = 0\ in$ Bar dia. $As\_a_s = 0\ in^2$ Total area of shear reinforcing

Calc. the dc & d to tension reinf.:

$dc := cover + diam_{bar_s} + \frac{diam_{bar}}{2}$ $dc = 2.38\ in$ Distance from the tension face to centroid of first layer of tension reinf.

$d := depth - dc$ $\boxed{d = 7.62\ in}$ Distance from compression face to centroid of tension reinf.

ULTIMATE MOMENT CAPACITY: [AASHTO 8.16.3.1]

$a := As\_a \cdot \frac{f_y}{.85 \cdot F'c \cdot b}$ $a = 0.86\ in$

$\phi Mn := \phi_m \cdot \left[As\_a \cdot f_y \cdot \left(d - \frac{a}{2} \right) \right]$ $\boxed{\phi Mn = 14.24\ kips \cdot ft}$ > $\boxed{Mu = 3.00\ kips \cdot ft}$

MAX. FLEXURE REINF. [AASHTO 8.16.3.1.1]

$$\rho_{bal} := \frac{0.85 \cdot \beta_1 \cdot F'c}{f_y} \cdot \frac{87000 \cdot psi}{87000 \cdot psi + f_y} \qquad \rho_{bal} = 0.02138$$

$$\rho := \frac{As\_a}{b \cdot d} \qquad \rho = 0.00481 \qquad \boxed{.75 \cdot \rho_{bal} = 0.01604} > \boxed{\rho = 0.00481}$$

MIN. FLEXURE REINF. [AASHTO 8.17.1.1]

$$Mc := \frac{b \cdot depth^2}{6} \cdot 7.5 \cdot \sqrt{psi} \cdot \sqrt{F'c} \qquad Mc = 6.84\,kips \cdot ft$$

CRACKING MOMENT on the basis of the modulus of rupture for normal weight concrete [AASHTO 8.15.2.1.1]

$$\boxed{\phi Mn = 14.24\,kips \cdot ft} > \boxed{1.2 \cdot Mc = 8.21\,kips \cdot ft}$$

OR

[AASHTO 8.17.1.2] $\boxed{\phi Mn = 14.24\,kips \cdot ft} > \boxed{1.33 Mu = 3.99\,kips \cdot ft}$

SERVICEABILITY REQUIREMENTS [AASHTO 8.16.8] - Use as general Check

$$k := \sqrt{2 \cdot n \cdot \rho + (n \cdot \rho)^2} - n \cdot \rho \qquad j := 1 - \frac{k}{3} \qquad k = 0.2542$$

$$j = 0.9153$$

$$fs_{max} := \frac{M_{max}}{As\_a \cdot j \cdot d} \qquad fs_{min} := \frac{M_{min}}{As\_a \cdot j \cdot d} \qquad fc_{max} := fs_{max} \cdot \frac{k}{n \cdot (1 - k)}$$

$$\boxed{fs_{max} = 8.21\,ksi} < \boxed{f_s = 24\,ksi}$$

$$fs_{min} = 8.21\,ksi$$

$$\boxed{fc_{max} = 0.31\,ksi} < \boxed{fc = 1.2\,ksi}$$

FATIGUE STRESS LIMITS [AASHTO 8.16.8.3]

$rh := .3$ (r/h) of .3 is used as a default

$$f_f := 21.\text{-}ksi - 0.33 \cdot fs_{min} + 8.\text{-}ksi \cdot rh \qquad \boxed{f_f = 20.69\,ksi} > \boxed{(fs_{max} - fs_{min}) = 0\,ksi}$$

Max. stress range for reinf. steel

DISTRIBUTION OF FLEXURAL REINFORCEMENT [AASHTO 8.16.8.4]

$dc := if[cover > 2 \cdot in, dc - (cover - 2 \cdot in), dc]$ $\qquad dc = 2.38\,in$ $\qquad$ Use max. cover as 2"

$$A := \frac{2 \cdot dc \cdot b}{AsNo} \qquad A = 57\,in^2 \qquad f_{s\_z} := \frac{z}{(dc \cdot A)^{\frac{1}{3}}} \qquad f_{s\_z} = 25.32\,ksi$$

Effective tension area of conc. surrounding 1 bar
-- formula for 1 layer of steel

$$f_{s\_df} := if(f_{s\_z} \le .6 \cdot f_y, f_{s\_z}, .6 \cdot f_y) \qquad \boxed{f_{s\_df} = 25.32\,ksi} > \boxed{fs_{max} = 8.21\,ksi}$$

SHEAR STRENGTH [AASHTO 8.16.6.1.1]

$Vu_{reqd} := \frac{Vu}{\phi_s}$ $\boxed{Vu_{reqd} = 2.94\,kips}$

Shear Strength Provided by Concrete [AASHTO 8.16.6.2.1] (Assumes a rect. section)

$factor := \frac{Vu \cdot d}{Mu}$ $factor = 0.53$ $factor := if(factor > 1., 1., factor)$ $factor = 0.53$

$Fv_c := \begin{bmatrix} (1.9 \cdot \sqrt{psi} \cdot \sqrt{F'c} + 2500 \cdot psi \cdot \rho \cdot factor) \\ 2 \cdot \sqrt{psi} \cdot \sqrt{F'c} \end{bmatrix}$ $Fv_c = \begin{pmatrix} 110.43 \\ 109.54 \end{pmatrix} psi$

$Fvmax := 3.5 \cdot (\sqrt{psi} \cdot \sqrt{F'c})$ $Fvmax = 191.7\,psi$

$Fvc := if(max(Fv_c) < Fvmax, max(Fv_c), Fvmax)$ $Fvc = 110.43\,psi$ concrete shear strength

$Vc := Fvc \cdot b \cdot d$ $\boxed{Vc = 10.1\,kips}$ shear carried by concrete

IF $\boxed{Vc = 10.1\,kips}$ > $\boxed{Vu_{reqd} = 2.94\,kips}$ $\boxed{\text{No Shear reinf. required [AASHTO 8.19.1]}}$

If Shear Reinforcing is required [AASHTO 8.16.6.3]

$Vs_{reqd} := if(Vu_{reqd} - Vc < 0. \cdot kips, 0.000001 \cdot kips, Vu_{reqd} - Vc)$ $\boxed{Vs_{reqd} = 0\,kips}$

Max. shear reinf. spacing [AASHTO 8.19.1.2], AASHTO 8.19.3]

$smax := \begin{pmatrix} \frac{As\_a_s \cdot f_y}{50 \cdot psi \cdot b} \\ 24 \cdot in \\ \frac{d}{2} \end{pmatrix}$ $smax = \begin{pmatrix} 0 \\ 24 \\ 3.81 \end{pmatrix} in$ $smax := min(smax)$ $\boxed{smax = 0\,in}$

max stirrup spacing

Reduction for max spacing for high shear reinf. requirement: [AASHTO 8.16.6.3.8]

IF $\boxed{Vs_{reqd} = 0\,kips}$ > $\boxed{4 \cdot \sqrt{psi} \cdot \sqrt{F'c} \cdot b \cdot d = 20.04\,kips}$ Then reduce max. spacing by 1/2

$s_{max} := if(Vs_{reqd} > 4 \cdot \sqrt{psi} \cdot \sqrt{F'c} \cdot b \cdot d, .5 \cdot smax, smax)$ $\boxed{s_{max} = 0\,in}$

Max steel shear strength allowed: [AASHTO 8.16.6.3.9]

$\boxed{Vs_{reqd} = 0\,kips}$ < $\boxed{8 \cdot \sqrt{psi} \cdot \sqrt{F'c} \cdot b \cdot d = 40.07\,kips}$

Stirrup Spacing: [AASHTO 8.16.6.3]

$s := \frac{As\_a_s \cdot f_y \cdot d}{Vs_{reqd}}$ $s = 0\,in$

$s_{reqd} := if(s > s_{max}, s_{max}, s)$ Max. Stirrup spacing: $\boxed{s_{reqd} = 0\,in}$

CHECK CRACK CONTROL -- [AASHTO 17.6.4.7]

$d = 7.62\,in$ Distance from compression face to centroid of tension reinf.

$d_c := cover + 0.5 \cdot diam_{bar}$ Thickness of cover from tension fiber to center of tension reinf.

$\beta := 1 + \frac{d_c}{.7 \cdot (d)}$ $\beta = 1.45$ $A = 57\,in^2$ Effective tension area of conc. surrounding 1 bar. (1 layer of steel)

$f_s := \frac{155}{\beta \cdot \sqrt[3]{d_c \cdot A}} \cdot \frac{kip}{in}$

$fs_{ck} := if(f_s \le .6 \cdot f_y, f_s, .6 \cdot f_y)$

$fs_{ck} = 20.89\,ksi$

$f_s = 20.89\,ksi$

$\frac{fs_{ck}}{fs_{max}} = 2.54$ > 1.0 ✓

Kimley-Horn and Associates, Inc.

Job McDowell Road Subject Structure #11 Walls M- Project No. 091131012

Designed by KJK Date 05/18/06 Checked by_____ Date_____

AASHTO 17th Edition LFD R/C Beam Design

REFERENCE: AASHTO 17th Edition, 2002

Note: Input parameters are in yellow highlight. Checks for adequacy are in blue highlight with border

Base Units: ft = 1L lb = 1M sec = 1T K = 1K lbf = force

Define Units: kips := 1000·lbf degF := 1·K ksi := 1000psi

DESIGN LOCATION: WALLS M-

MATERIAL PROPERTIES:

CONCRETE :

$F'c := 3 \cdot ksi$ Concrete compressive strength

$z := 130 \frac{kips}{in}$ Quantity limiting distribution of flexural reinf. [AASHTO 8.16.8.4]

$W_c := .15 \cdot \frac{kips}{ft^3}$ [UNIT FORCE -- AASHTO 3.3.6]

REINFORCING STEEL :

$f_y := 60.0 \cdot ksi$ [Grade 60]

$f_s := 24.0 \cdot ksi$ [AASHTO 8.15.2.2 SERVICE LOAD]

$E_s := 29000ksi$ [AASHTO 8.7.2]

$\phi_m := .90$ Flexure - strength reduction factor [AASHTO 8.16.1.2.2]

$\phi_s := .85$ Shear - strength reduction factor [AASHTO 8.16.1.2.2]

CALCULATED MATERIAL PROPERTIES:

$fc := .4 \cdot F'c$ $\boxed{fc = 1.2\,ksi}$ [SERVICE LOAD]

$E_c := W_c^{1.5} \cdot 33 \cdot \sqrt{F'c} \cdot \left(\frac{ft^3}{lbf}\right)^{1.5} \cdot \sqrt{psi}$ $\boxed{E_c = 3320.56\,ksi}$ Elastic Modulus for concrete [AASHTO 8.7.1]

$n := floor\left(\frac{E_s}{E_c}\right) + if\left[.5 > \left(\frac{E_s}{E_c}\right) - floor\left(\frac{E_s}{E_c}\right), 0, 1\right]$ $\boxed{n = 9}$ Modular Ratio [AASHTO 8.15.3.4]

$\beta_1 := if\left[F'c \le 4. \cdot ksi, .85, .85 - (F'c - 4 \cdot ksi) \cdot .05 \cdot \frac{1}{ksi}\right]$ $\boxed{\beta_1 = 0.85}$ FOR F'c < 4ksi β_1 = .85 [AASHTO 8.16.2.7]

DESIGN LOADS:

LOAD FACTOR	SERVICE LOAD	
$Mu := 4 \cdot kips \cdot ft$	$M_{max} := 3 \cdot kips \cdot ft$	Use service load to check serviceabilty requirements
$Vu := 2.5 \cdot kips$	$M_{min} := 3 \cdot kips \cdot ft$	

GEOMETRY:

$b := 1 \cdot ft$ Width of compression flange $depth := 0.833 \cdot ft$ Gross depth of section

REINFORCING STEEL:

$cover := 2 \cdot in$ Clear cover to stirrups [AASHTO 8.22.1]

Use # $bar := 6$ **--- Moment reinforcement**

$AsNo := 1$ Total number of bars used Total Area of Reinforcing steel

$A_{bar} = 0.44\ in^2$ Bar area $As\_a := AsNo \cdot A_{bar}$

$diam_{bar} = 0.75\ in$ Bar dia. $As\_a = 0.44\ in^2$ Total area of flexure reinforcing

Use # $bar_s := 0$ **--- Shear reinforcement**

$AsNo_s := 0$ Total number of legs used Total Area of Reinforcing steel

$A_{bar_s} = 0\ in^2$ Bar area $As\_a_s := AsNo_s \cdot A_{bar_s}$

$diam_{bar_s} = 0\ in$ Bar dia. $As\_a_s = 0\ in^2$ Total area of shear reinforcing

Calc. the dc & d to tension reinf.:

$dc := cover + diam_{bar_s} + \frac{diam_{bar}}{2}$ $dc = 2.38\ in$ Distance from the tension face to centroid of first layer of tension reinf.

$d := depth - dc$ $\boxed{d = 7.62\ in}$ Distance from compression face to centroid of tension reinf.

ULTIMATE MOMENT CAPACITY: [AASHTO 8.16.3.1]

$a := As\_a \cdot \frac{f_y}{.85 \cdot F'c \cdot b}$ $a = 0.86\ in$

$\phi Mn := \phi_m \cdot \left[As\_a \cdot f_y \cdot \left(d - \frac{a}{2} \right) \right]$ $\boxed{\phi Mn = 14.24\ kips \cdot ft}$ > $\boxed{Mu = 4.00\ kips \cdot ft}$

MAX. FLEXURE REINF. [AASHTO 8.16.3.1.1]

$$\rho_{bal} := \frac{0.85 \cdot \beta_1 \cdot F'c}{f_y} \cdot \frac{87000 \cdot psi}{87000 \cdot psi + f_y} \qquad \rho_{bal} = 0.02138$$

$$\rho := \frac{As\_a}{b \cdot d} \qquad \rho = 0.00481$$

$.75 \cdot \rho_{bal} = 0.01604$ > $\rho = 0.00481$ ✓

MIN. FLEXURE REINF. [AASHTO 8.17.1.1]

$$Mc := \frac{b \cdot depth^2}{6} \cdot 7.5 \cdot \sqrt{psi} \cdot \sqrt{F'c} \qquad Mc = 6.84\ kips \cdot ft$$

CRACKING MOMENT on the basis of the modulus of rupture for normal weight concrete [AASHTO 8.15.2.1.1]

$\phi Mn = 14.24\ kips \cdot ft$ > $1.2 \cdot Mc = 8.21\ kips \cdot ft$ ✓

OR

[AASHTO 8.17.1.2] $\phi Mn = 14.24\ kips \cdot ft$ > $1.33 Mu = 5.32\ kips \cdot ft$ ✓

SERVICEABILITY REQUIREMENTS [AASHTO 8.16.8] - Use as general Check

$$k := \sqrt{2 \cdot n \cdot \rho + (n \cdot \rho)^2} - n \cdot \rho \qquad j := 1 - \frac{k}{3} \qquad k = 0.2542 \qquad j = 0.9153$$

$$fs_{max} := \frac{M_{max}}{As\_a \cdot j \cdot d} \qquad fs_{min} := \frac{M_{min}}{As\_a \cdot j \cdot d} \qquad fc_{max} := fs_{max} \cdot \frac{k}{n \cdot (1 - k)}$$

$fs_{max} = 11.73\ ksi$ < $f_s = 24\ ksi$ ✓

$fs_{min} = 11.73\ ksi$

$fc_{max} = 0.44\ ksi$ < $fc = 1.2\ ksi$ ✓

FATIGUE STRESS LIMITS [AASHTO 8.16.8.3]

$rh := .3$ (r/h) of .3 is used as a default

$f_f := 21.\cdot ksi - 0.33 \cdot fs_{min} + 8.\cdot ksi \cdot rh$ $\qquad f_f = 19.53\ ksi$ > $(fs_{max} - fs_{min}) = 0\ ksi$ ✓

Max. stress range for reinf. steel

DISTRIBUTION OF FLEXURAL REINFORCEMENT [AASHTO 8.16.8.4]

$dc := if[cover > 2 \cdot in, dc - (cover - 2 \cdot in), dc]$ $\qquad dc = 2.38\ in$ $\qquad$ Use max. cover as 2"

$$A := \frac{2 \cdot dc \cdot b}{AsNo} \qquad A = 57\ in^2 \qquad f_{s\_z} := \frac{z}{(dc \cdot A)^{\frac{1}{3}}} \qquad f_{s\_z} = 25.32\ ksi$$

Effective tension area of conc. surrounding 1 bar
-- formula for 1 layer of steel

$f_{s\_df} := if(f_{s\_z} \le .6 \cdot f_y, f_{s\_z}, .6 \cdot f_y)$ $\qquad f_{s\_df} = 25.32\ ksi$ > $fs_{max} = 11.73\ ksi$ ✓

SHEAR STRENGTH [AASHTO 8.16.6.1.1]

$Vu_{reqd} := \frac{Vu}{\phi_s}$ $\boxed{Vu_{reqd} = 2.94\,kips}$

Shear Strength Provided by Concrete [AASHTO 8.16.6.2.1] (Assumes a rect. section)

$factor := \frac{Vu \cdot d}{Mu}$ $factor = 0.4$ $factor := if(factor > 1., 1., factor)$ $factor = 0.4$

$Fv_c := \begin{bmatrix} (1.9 \cdot \sqrt{psi} \cdot \sqrt{F'c} + 2500 \cdot psi \cdot \rho \cdot factor) \\ 2 \cdot \sqrt{psi} \cdot \sqrt{F'c} \end{bmatrix}$ $Fv_c = \begin{pmatrix} 108.84 \\ 109.54 \end{pmatrix} psi$

$Fvmax := 3.5 \cdot (\sqrt{psi} \cdot \sqrt{F'c})$ $Fvmax = 191.7\,psi$

$Fvc := if(max(Fv_c) < Fvmax, max(Fv_c), Fvmax)$ $Fvc = 109.54\,psi$ concrete shear strength

$Vc := Fvc \cdot b \cdot d$ $\boxed{Vc = 10.02\,kips}$ shear carried by concrete

IF $\boxed{Vc = 10.02\,kips}$ > $\boxed{Vu_{reqd} = 2.94\,kips}$ $\boxed{\text{No Shear reinf. required [AASHTO 8.19.1]}}$ ✓

If Shear Reinforcing is required [AASHTO 8.16.6.3]

$Vs_{reqd} := if(Vu_{reqd} - Vc < 0. \cdot kips, 0.000001 \cdot kips, Vu_{reqd} - Vc)$ $\boxed{Vs_{reqd} = 0\,kips}$

Max. shear reinf. spacing [AASHTO 8.19.1.2], AASHTO 8.19.3]

$smax := \begin{pmatrix} \frac{As\_a_s \cdot f_y}{50 \cdot psi \cdot b} \\ 24 \cdot in \\ \frac{d}{2} \end{pmatrix}$ $smax = \begin{pmatrix} 0 \\ 24 \\ 3.81 \end{pmatrix} in$ $smax := min(smax)$ $\boxed{smax = 0\,in}$

max stirrup spacing

Reduction for max spacing for high shear reinf. requirement: [AASHTO 8.16.6.3.8]

IF $\boxed{Vs_{reqd} = 0\,kips}$ > $\boxed{4 \cdot \sqrt{psi} \cdot \sqrt{F'c} \cdot b \cdot d = 20.04\,kips}$ Then reduce max. spacing by 1/2

$s_{max} := if(Vs_{reqd} > 4 \cdot \sqrt{psi} \cdot \sqrt{F'c} \cdot b \cdot d, .5 \cdot smax, smax)$ $\boxed{s_{max} = 0\,in}$

Max steel shear strength allowed: [AASHTO 8.16.6.3.9]

$\boxed{Vs_{reqd} = 0\,kips}$ < $\boxed{8 \cdot \sqrt{psi} \cdot \sqrt{F'c} \cdot b \cdot d = 40.07\,kips}$ ✓

Stirrup Spacing: [AASHTO 8.16.6.3]

$s := \frac{As\_a_s \cdot f_y \cdot d}{Vs_{reqd}}$ $s = 0\,in$

$s_{reqd} := if(s > s_{max}, s_{max}, s)$ Max. Stirrup spacing: $\boxed{s_{reqd} = 0\,in}$ ✓

CHECK CRACK CONTROL -- [AASHTO 17.6.4.7]

$d = 7.62\,in$ Distance from compression face to centroid of tension reinf.

$d_c := cover + 0.5 \cdot diam_{bar}$ Thickness of cover from tension fiber to center of tension reinf.

$\beta := 1 + \frac{d_c}{.7 \cdot (d)}$ $\beta = 1.45$ $A = 57\,in^2$ Effective tension area of conc. surrounding 1 bar. (1 layer of steel)

$f_s := \frac{155}{\beta \cdot \sqrt[3]{d_c \cdot A}} \cdot \frac{kip}{in}$ $fs_{ck} := if(f_s \le .6 \cdot f_y, f_s, .6 \cdot f_y)$

$fs_{ck} = 20.89\,ksi$

$f_s = 20.89\,ksi$

$\boxed{\frac{fs_{ck}}{fs_{max}} = 1.78} > \boxed{1.0}$ ✓

Kimley-Horn and Associates, Inc.

Job McDowell Road Subject Structure #11 Btm Slab M+ Project No. 091131012

Designed by KJK Date 05/18/06 Checked by_____ Date_____

AASHTO 17th Edition LFD R/C Beam Design

REFERENCE: AASHTO 17th Edition, 2002

Note: Input parameters are in yellow highlight. Checks for adequacy are in blue highlight with border

Base Units: ft = 1L lb = 1M sec = 1T K = 1K lbf = force

Define Units: kips := 1000·lbf degF := 1·K ksi := 1000psi

DESIGN LOCATION: BOTTOM SLAB M+

MATERIAL PROPERTIES:

CONCRETE :

$F'c := 3 \cdot ksi$ Concrete compressive strength

$z := 130 \frac{kips}{in}$ Quantity limiting distribution of flexural reinf. [AASHTO 8.16.8.4]

$W_c := .15 \cdot \frac{kips}{ft^3}$ [UNIT FORCE -- AASHTO 3.3.6]

REINFORCING STEEL :

$f_y := 60.0 \cdot ksi$ [Grade 60]

$f_s := 24.0 \cdot ksi$ [AASHTO 8.15.2.2 SERVICE LOAD]

$E_s := 29000ksi$ [AASHTO 8.7.2]

$\phi_m := .90$ Flexure - strength reduction factor [AASHTO 8.16.1.2.2]

$\phi_s := .85$ Shear - strength reduction factor [AASHTO 8.16.1.2.2]

CALCULATED MATERIAL PROPERTIES:

$fc := .4 \cdot F'c$

$fc = 1.2\,ksi$ [SERVICE LOAD]

$E_c := W_c^{1.5} \cdot 33 \cdot \sqrt{F'c} \cdot \left(\frac{ft^3}{lbf}\right)^{1.5} \cdot \sqrt{psi}$

$E_c = 3320.56\,ksi$ Elastic Modulus for concrete [AASHTO 8.7.1]

$n := floor\left(\frac{E_s}{E_c}\right) + if\left[.5 > \left(\frac{E_s}{E_c}\right) - floor\left(\frac{E_s}{E_c}\right), 0, 1\right]$

$n = 9$ Modular Ratio [AASHTO 8.15.3.4]

$\beta_1 := if\left[F'c \le 4.\cdot ksi, .85, .85 - (F'c - 4 \cdot ksi) \cdot .05 \cdot \frac{1}{ksi}\right]$

$\beta_1 = 0.85$ FOR F'c < 4ksi β_1 = .85 [AASHTO 8.16.2.7]

DESIGN LOADS:

LOAD FACTOR	SERVICE LOAD	
$Mu := 15 \cdot kips \cdot ft$	$M_{max} := 11 \cdot kips \cdot ft$	Use service load to check serviceabilty requirements
$Vu := 7 \cdot kips$	$M_{min} := 5 \cdot kips \cdot ft$	

GEOMETRY:

$b := 1 \cdot ft$ Width of compression flange $depth := 1.0 \cdot ft$ Gross depth of section

REINFORCING STEEL:

$cover := 3 \cdot in$ Clear cover to stirrups [AASHTO 8.22.1]

Use # $bar := 6$ **--- Moment reinforcement**

$AsNo := 2$ Total number of bars used Total Area of Reinforcing steel

$A_{bar} = 0.44\ in^2$ Bar area $As\_a := AsNo \cdot A_{bar}$

$diam_{bar} = 0.75\ in$ Bar dia. $As\_a = 0.88\ in^2$ Total area of flexure reinforcing

Use # $bar_s := 0$ **--- Shear reinforcement**

$AsNo_s := 0$ Total number of legs used Total Area of Reinforcing steel

$A_{bar_s} = 0\ in^2$ Bar area $As\_a_s := AsNo_s \cdot A_{bar_s}$

$diam_{bar_s} = 0\ in$ Bar dia. $As\_a_s = 0\ in^2$ Total area of shear reinforcing

Calc. the dc & d to tension reinf.:

$dc := cover + diam_{bar_s} + \frac{diam_{bar}}{2}$ $dc = 3.38\ in$ Distance from the tension face to centroid of first layer of tension reinf.

$d := depth - dc$ $d = 8.63\ in$ Distance from compression face to centroid of tension reinf.

ULTIMATE MOMENT CAPACITY: [AASHTO 8.16.3.1]

$a := As\_a \cdot \frac{f_y}{.85 \cdot F'c \cdot b}$ $a = 1.73\ in$

$\phi Mn := \phi_m \cdot \left[As\_a \cdot f_y \cdot \left(d - \frac{a}{2} \right) \right]$ $\phi Mn = 30.74\ kips \cdot ft$ > $Mu = 15.00\ kips \cdot ft$

MAX. FLEXURE REINF. [AASHTO 8.16.3.1.1]

$$\rho_{bal} := \frac{0.85 \cdot \beta_1 \cdot F'c}{f_y} \cdot \frac{87000 \cdot psi}{87000 \cdot psi + f_y} \qquad \rho_{bal} = 0.02138$$

$$\rho := \frac{As\_a}{b \cdot d} \qquad \rho = 0.0085$$

$.75 \cdot \rho_{bal} = 0.01604$ > $\rho = 0.0085$ ✓

MIN. FLEXURE REINF. [AASHTO 8.17.1.1]

$$Mc := \frac{b \cdot depth^2}{6} \cdot 7.5 \cdot \sqrt{psi} \cdot \sqrt{F'c} \qquad Mc = 9.86\ kips \cdot ft$$

CRACKING MOMENT on the basis of the modulus of rupture for normal weight concrete [AASHTO 8.15.2.1.1]

$\phi Mn = 30.74\ kips \cdot ft$ > $1.2 \cdot Mc = 11.83\ kips \cdot ft$ ✓

OR

[AASHTO 8.17.1.2] $\phi Mn = 30.74\ kips \cdot ft$ > $1.33 Mu = 19.95\ kips \cdot ft$ ✓

SERVICEABILITY REQUIREMENTS [AASHTO 8.16.8] - Use as general Check

$$k := \sqrt{2 \cdot n \cdot \rho + (n \cdot \rho)^2} - n \cdot \rho \qquad j := 1 - \frac{k}{3} \qquad k = 0.3221$$

$$j = 0.8926$$

$$fs_{max} := \frac{M_{max}}{As\_a \cdot j \cdot d} \qquad fs_{min} := \frac{M_{min}}{As\_a \cdot j \cdot d} \qquad fc_{max} := fs_{max} \cdot \frac{k}{n \cdot (1 - k)}$$

$fs_{max} = 19.48\ ksi$ < $f_s = 24\ ksi$ ✓

$fs_{min} = 8.86\ ksi$

$fc_{max} = 1.03\ ksi$ < $fc = 1.2\ ksi$ ✓

FATIGUE STRESS LIMITS [AASHTO 8.16.8.3]

$rh := .3$ (r/h) of .3 is used as a default

$f_f := 21.\cdot ksi - 0.33 \cdot fs_{min} + 8.\cdot ksi \cdot rh$ $\qquad f_f = 20.48\ ksi$ > $(fs_{max} - fs_{min}) = 10.63\ ksi$ ✓

Max. stress range for reinf. steel

DISTRIBUTION OF FLEXURAL REINFORCEMENT [AASHTO 8.16.8.4]

$dc := if[cover > 2 \cdot in, dc - (cover - 2 \cdot in), dc]$ $\qquad dc = 2.38\ in$ $\qquad$ Use max. cover as 2"

$$A := \frac{2 \cdot dc \cdot b}{AsNo} \qquad A = 28.5\ in^2 \qquad f_{s\_z} := \frac{z}{(dc \cdot A)^{\frac{1}{3}}} \qquad f_{s\_z} = 31.9\ ksi$$

Effective tension area of conc. surrounding 1 bar
-- formula for 1 layer of steel

$f_{s\_df} := if(f_{s\_z} \le .6 \cdot f_y, f_{s\_z}, .6 \cdot f_y)$ $\qquad f_{s\_df} = 31.9\ ksi$ > $fs_{max} = 19.48\ ksi$ ✓

SHEAR STRENGTH [AASHTO 8.16.6.1.1]

$Vu_{reqd} := \frac{Vu}{\phi_s}$ $\boxed{Vu_{reqd} = 8.24\,kips}$

Shear Strength Provided by Concrete [AASHTO 8.16.6.2.1] (Assumes a rect. section)

$factor := \frac{Vu \cdot d}{Mu}$ $factor = 0.34$ $factor := if(factor > 1., 1., factor)$ $factor = 0.34$

$Fv_c := \begin{bmatrix} (1.9 \cdot \sqrt{psi} \cdot \sqrt{F'c} + 2500 \cdot psi \cdot \rho \cdot factor) \\ 2 \cdot \sqrt{psi} \cdot \sqrt{F'c} \end{bmatrix}$ $Fv_c = \begin{pmatrix} 111.2 \\ 109.54 \end{pmatrix} psi$

$Fvmax := 3.5 \cdot (\sqrt{psi} \cdot \sqrt{F'c})$ $Fvmax = 191.7\,psi$

$Fvc := if(max(Fv_c) < Fvmax, max(Fv_c), Fvmax)$ $Fvc = 111.2\,psi$ concrete shear strength

$Vc := Fvc \cdot b \cdot d$ $\boxed{Vc = 11.51\,kips}$ shear carried by concrete

IF $\boxed{Vc = 11.51\,kips}$ > $\boxed{Vu_{reqd} = 8.24\,kips}$ $\boxed{\text{No Shear reinf. required [AASHTO 8.19.1]}}$ ✓

If Shear Reinforcing is required [AASHTO 8.16.6.3]

$Vs_{reqd} := if(Vu_{reqd} - Vc < 0.\text{-}kips, 0.000001 \cdot kips, Vu_{reqd} - Vc)$ $\boxed{Vs_{reqd} = 0\,kips}$

Max. shear reinf. spacing [AASHTO 8.19.1.2], AASHTO 8.19.3]

$smax := \begin{pmatrix} \frac{As\_a_s \cdot f_y}{50 \cdot psi \cdot b} \\ 24 \cdot in \\ \frac{d}{2} \end{pmatrix}$ $smax = \begin{pmatrix} 0 \\ 24 \\ 4.31 \end{pmatrix} in$ $smax := min(smax)$ $\boxed{smax = 0\,in}$

max stirrup spacing

Reduction for max spacing for high shear reinf. requirement: [AASHTO 8.16.6.3.8]

IF $\boxed{Vs_{reqd} = 0\,kips}$ > $\boxed{4 \cdot \sqrt{psi} \cdot \sqrt{F'c} \cdot b \cdot d = 22.68\,kips}$ Then reduce max. spacing by 1/2

$s_{max} := if(Vs_{reqd} > 4 \cdot \sqrt{psi} \cdot \sqrt{F'c} \cdot b \cdot d, .5 \cdot smax, smax)$ $\boxed{s_{max} = 0\,in}$

Max steel shear strength allowed: [AASHTO 8.16.6.3.9]

$\boxed{Vs_{reqd} = 0\,kips}$ < $\boxed{8 \cdot \sqrt{psi} \cdot \sqrt{F'c} \cdot b \cdot d = 45.35\,kips}$ ✓

Stirrup Spacing: [AASHTO 8.16.6.3]

$s := \frac{As\_a_s \cdot f_y \cdot d}{Vs_{reqd}}$ $s = 0\,in$

$s_{reqd} := if(s > s_{max}, s_{max}, s)$ Max. Stirrup spacing: $\boxed{s_{reqd} = 0\,in}$ ✓

CHECK CRACK CONTROL -- [AASHTO 17.6.4.7]

$d = 8.63\,in$ Distance from compression face to centroid of tension reinf.

$d_c := cover + 0.5 \cdot diam_{bar}$ Thickness of cover from tension fiber to center of tension reinf.

$\beta := 1 + \frac{d_c}{.7 \cdot (d)}$ $\beta = 1.56$ $A = 28.5\,in^2$ Effective tension area of conc. surrounding 1 bar. (1 layer of steel)

$f_s := \frac{155}{\beta \cdot \sqrt[3]{d_c \cdot A}} \cdot \frac{kip}{in}$

$fs_{ck} := if(f_s \le .6 \cdot f_y, f_s, .6 \cdot f_y)$

$f_s = 21.7\,ksi$

$fs_{ck} = 21.7\,ksi$

$\frac{fs_{ck}}{fs_{max}} = 1.11$ > 1.0 ✓

STRUCTURE #12

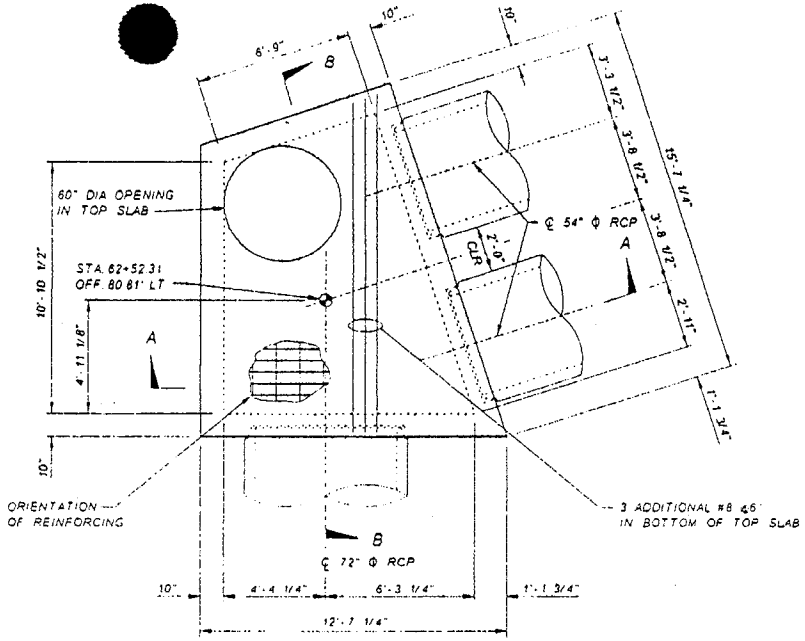

TOP PLAN
NTS

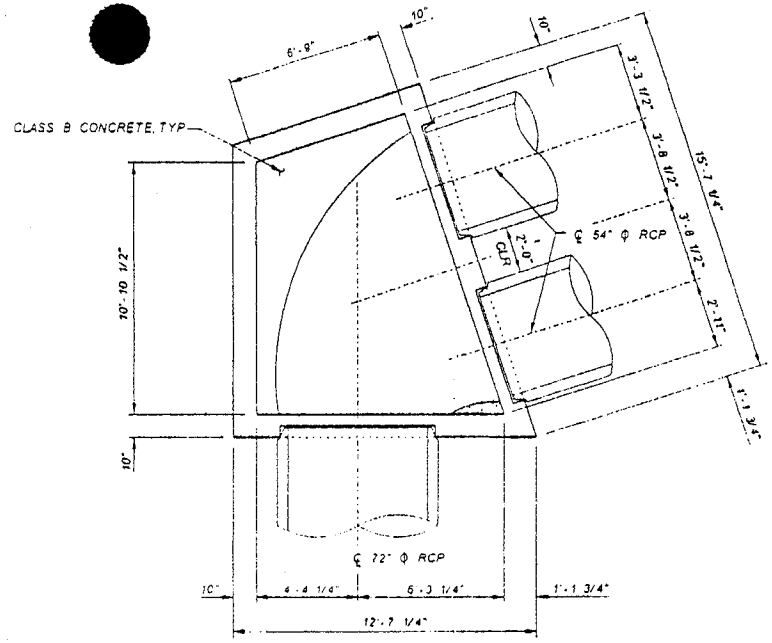

BOTTOM PLAN
NTS

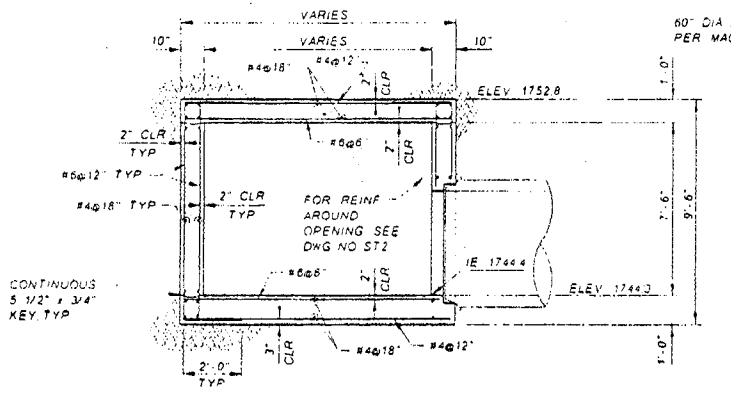

SECTION A-A
NTS

NOTE MANHOLE RISER NOT SHOWN FOR CLARITY

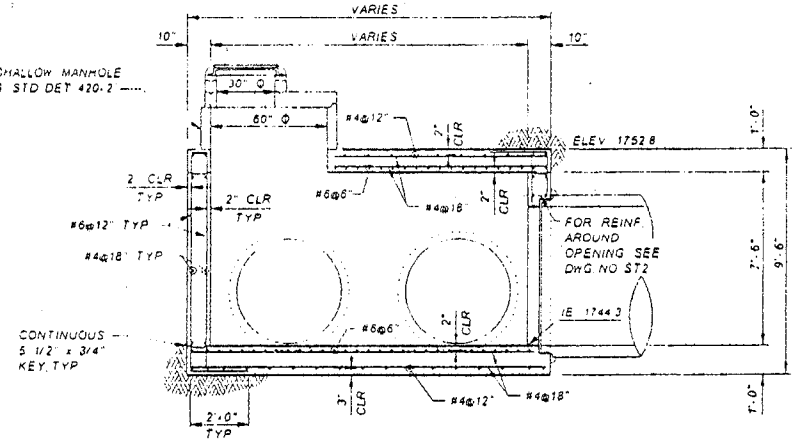

SECTION B-B
NTS

NO	REVISION	BY	DATE
3			
2			
1			

FLOOD CONTROL DISTRICT OF MARICOPA COUNTY
ENGINEERING DIVISION

MCDOWELL ROAD BASIN
AND STORM DRAIN PROJECT
PCN 420.03.31

	BY	DATE
DESIGNED	SMN	10/04/06
DRAWN	MSK	10/04/06
CHECKED	KJK/DJL	10/04/06

Kimley-Horn and Associates, Inc

DRAWING NO ST8 | STRUCTURE #12 | SHEET 50 OF 74

22 AM 10/5/2006 kevin.kimm K:\water\Resources\911310121\CADD\11310121ST09.dgn

Concrete Box Member Design Forces: STRUCTURE 12

Wall Information (Assumes design as a slab partiall fixed at the top and bottom slabs):

Wall Height: $h_{wall} := 7.5 \cdot ft$

Top Slab Thickness: $t_{tslab} := 1.0 \cdot ft$

Depth of Fill: $d_{fill} := 2.0 \cdot ft$

Height from btm wall to top of fill: $H := h_{wall} + t_{tslab} + d_{fill}$

Per Geotechnical Report lateral load on walls is a uniform pressure since walls are restrained from moving.

Lateral Soil Pressure: $w_{soillat} := 20 \cdot H \cdot psf$ $\quad w_{soillat} = 210\,plf$

Lateral Soil Pressure from Traffic Surcharge: $w_{soilsur} := 120 \cdot psf \cdot 1 \cdot ft$ $\quad w_{soilsur} = 120\,plf$

Total Lateral Pressure on Wall: $w_{soil} := w_{soillat} + w_{soilsur}$

$w_{soil} = 330\,plf$

Positive Moment at Mid-span of wall (per AISC LRFD Beam Diagrams pg 4-190 & 4-195):

$$M_{midspan} := \frac{w_{soil} \cdot h_{wall}^2}{16} \qquad M_{midspan} = 1.16\,kft$$

$$M_{u\_midspan} := 1.3 \cdot M_{midspan} \qquad M_{u\_midspan} = 1.508\,kft$$

Negative Moment at End of wall (per AISC LRFD Beam Diagrams pg 4-195):

$$M_{endspan} := \frac{w_{soil} \cdot h_{wall}^2}{12} \qquad M_{endspan} = 1.547\,kft$$

$$M_{u\_endspan} := 1.3 \cdot M_{endspan} \qquad M_{u\_endspan} = 2.011\,kft$$

Shear at End of wall (per AISC LRFD Beam Diagrams pg 4-190):

$$V_{endwall} := \frac{w_{soil} \cdot h_{wall}}{2} \qquad V_{endwall} = 1.237\,kip$$

$$V_{u\_endwall} := 1.3 \cdot V_{endwall} \qquad V_{u\_endwall} = 1.609\,kip$$

Top Slab Information (Assumes design a one-way simple span):

Design Slab Span: $l_{slab} := 9 \cdot ft$

Design Slab Thickness: $t_{slab} := 12 \cdot in$

Depth of Fill: $d_{fill} := 2 \cdot ft$ $\quad$ $Impact := 1.20$

Unit Weight of Soil: $\gamma_{soil} := 125 \cdot pcf$

Truck Wheel Load (if applicable): $P := 4 \cdot kip$ $\quad$ Assume one 16 kip wheel load distributed over 4' width (AASHTO 3.24.3)

Truck Wheel Load distribution per AASHTO 6.4 (if fill depth > 2 feet):

Distribute load over square with sides of "dist": $dist := 1.75 \cdot d_{fill}$ $\quad$ $dist = 3.5\ ft$

Equivalent uniform truck wheel load: $P_{wheel\_pres} := \frac{P}{dist^2}$ $\quad$ $P_{wheel\_pres} = 0.327\,ksf$

Positive Moment at Midspan of Top Slab:

$$M_{DL} := \frac{\left(d_{fill} \cdot \gamma_{soil} + t_{slab} \cdot 150pcf\right) \cdot 1ft \cdot l_{slab}^2}{8} \qquad M_{DL} = 4.05\,kft$$

$$M_{LL} := \frac{P \cdot l_{slab}}{4} \qquad M_{LL} = 9\,kft$$

Modify equation based on fill depth - See above

$$M := M_{DL} + M_{LL} \cdot Impact \qquad M = 14.85\,kft$$

$$M_u := 1.3\left(1.0 \cdot M_{DL} + 1.67 \cdot M_{LL} \cdot Impact\right) \qquad M_u = 28.712\,kft$$

Shear at End of wall:

$$V_{DL} := \frac{\left(d_{fill} \cdot \gamma_{soil} + t_{slab} \cdot 150pcf\right) \cdot 1ft \cdot l_{slab}}{2} \qquad V_{DL} = 1.8\,kip$$

$$V_{LL} := P \qquad V_{LL} = 4\,kip$$

Modify equation based on fill depth - See above

$$V := V_{DL} + V_{LL} \cdot Impact \qquad V = 6.6\,kip$$

$$V_u := 1.3\left(1.0 \cdot V_{DL} + 1.67 \cdot V_{LL} \cdot Impact\right) \qquad V_u = 12.761\,kip$$

Bottom Slab Information (Assumes design a one-way simple span):

Design of bottom slab based on soil pressure. Soil pressure calculated assuming all loads are evenly distributed over the area of the bottom slab.

Design Bottom Slab Span: $l_{bslab} := 9 \cdot ft$

Design Bottom Slab Thickness: $t_{bslab} := 12 \cdot in$

Area of Top Slab $area_{tslab} := 150 \cdot ft^2$

Area of Bottom Slab $area_{bslab} := 150 \cdot ft^2$

Perimeter of Box Structure: $perim := 50 \cdot ft$

Design Wall Thickness: $t_{wall} := 10 \cdot in$

Design Wall Height: $h_{wall} := 7.5 \cdot ft$

Load from Fill on Top Slab:

$P_{fill} := d_{fill} \cdot \gamma_{soil} \cdot area_{tslab}$ $P_{fill} = 37.5\,kip$

Load from Truck Wheel Load on Top Slab:

$P := 16 \cdot kip$

Number of wheel loads that can be placed on tops slab: $N_P := 2$

$P_{truck} := P \cdot N_P$ $P_{truck} = 32\,kip$

Load from Top Slab Selfweight:

$P_{topslab} := t_{slab} \cdot 150 \cdot pcf \cdot area_{tslab}$ $P_{topslab} = 22.5\,kip$

Load from Wall Selfweight:

$P_{wall} := t_{wall} \cdot 150 \cdot pcf \cdot perim \cdot h_{wall}$ $P_{topslab} = 22.5\,kip$

Ignore Bottom Slab Selfweight since it will cancel itself out in the design

Total Load for soil pressure calculations:

$P_{total} := P_{fill} + P_{truck} + P_{topslab} + P_{wall}$ $P_{total} = 138.875\,kip$

Soil Pressure for Design of Bottom Slab:

$$soilpres := \frac{P_{total}}{area_{bslab}} \qquad soilpres = 0.926\,ksf$$

Positive Moment at Midspan of Bottom Slab:

$$M := \frac{soilpres \cdot 1\,ft \cdot l_{bslab}^{2}}{8} \qquad M = 9.374\,kft$$

$$M_u := 1.3M \qquad M_u = 12.186\,kft$$

Shear at End of wall:

$$V := \frac{soilpres \cdot 1\,ft \cdot l_{bslab}}{2} \qquad V = 4.166\,kip$$

$$V_u := 1.3V \qquad V_u = 5.416\,kip$$

Kimley-Horn and Associates, Inc.

Job McDowell Road Subject Structure #12 Top Slab M+ Project No. 091131012

Designed by KJK Date 06/05/06 Checked by_____ Date_____

AASHTO 17th Edition LFD R/C Beam Design

REFERENCE: AASHTO 17th Edition, 2002

Note: Input parameters are in yellow highlight Checks for adequacy are in blue highlight with border

Base Units: ft = 1L lb = 1M sec = 1T K= 1K lbf = force

Define Units: kips := 1000·lbf degF := 1·K ksi := 1000psi

DESIGN LOCATION: TOP SLAB M+

MATERIAL PROPERTIES:

CONCRETE :

$F'c := 3 \cdot ksi$ Concrete compressive strength

$z := 130 \frac{kips}{in}$ Quantity limiting distribution of flexural reinf. [AASHTO 8.16.8.4]

$W_c := .15 \cdot \frac{kips}{ft^3}$ [UNIT FORCE -- AASHTO 3.3.6]

REINFORCING STEEL :

$f_y := 60.0 \cdot ksi$ [Grade 60]

$f_s := 24.0 \cdot ksi$ [AASHTO 8.15.2.2 SERVICE LOAD]

$E_s := 29000ksi$ [AASHTO 8.7.2]

$\phi_m := .90$ Flexure - strength reduction factor [AASHTO 8.16.1.2.2]

$\phi_s := .85$ Shear - strength reduction factor [AASHTO 8.16.1.2.2]

CALCULATED MATERIAL PROPERTIES:

$fc := .4 \cdot F'c$ $fc = 1.2 ksi$ [SERVICE LOAD]

$E_c := W_c^{1.5} \cdot 33 \cdot \sqrt{F'c} \cdot \left(\frac{ft^3}{lbf}\right)^{1.5} \cdot \sqrt{psi}$ $E_c = 3320.56 ksi$ Elastic Modulus for concrete [AASHTO 8.7.1]

$n := floor\left(\frac{E_s}{E_c}\right) + if\left[.5 > \left(\frac{E_s}{E_c}\right) - floor\left(\frac{E_s}{E_c}\right), 0, 1\right]$ $n = 9$ Modular Ratio [AASHTO 8.15.3.4]

$\beta_1 := if\left[F'c \le 4.\cdot ksi, .85, .85 - (F'c - 4 \cdot ksi) \cdot .05 \cdot \frac{1}{ksi}\right]$ $\beta_1 = 0.85$ FOR $F'c < 4ksi$ $\beta_1 = .85$ [AASHTO 8.16.2.7]

DESIGN LOADS:

LOAD FACTOR	SERVICE LOAD	
$Mu := 29 \cdot kips \cdot ft$	$M_{max} := 15 \cdot kips \cdot ft$	Use service load to check serviceabilty requirements
$Vu := 12.8 \cdot kips$	$M_{min} := 5 \cdot kips \cdot ft$	

GEOMETRY:

$b := 1 \cdot ft$ Width of compression flange $depth := 1.0 \cdot ft$ Gross depth of section

REINFORCING STEEL:

$cover := 2 \cdot in$ Clear cover to stirrups [AASHTO 8.22.1]

Use # $bar := 6$ **--- Moment reinforcement**

$AsNo := 2$ Total number of bars used Total Area of Reinforcing steel

$A_{bar} = 0.44\ in^2$ Bar area $As\_a := AsNo \cdot A_{bar}$

$diam_{bar} = 0.75\ in$ Bar dia. $As\_a = 0.88\ in^2$ Total area of flexure reinforcing

Use # $bar_s := 0$ **--- Shear reinforcement**

$AsNo_s := 0$ Total number of legs used Total Area of Reinforcing steel

$A_{bar_s} = 0\ in^2$ Bar area $As\_a_s := AsNo_s \cdot A_{bar_s}$

$diam_{bar_s} = 0\ in$ Bar dia. $As\_a_s = 0\ in^2$ Total area of shear reinforcing

Calc. the dc & d to tension reinf.:

$dc := cover + diam_{bar_s} + \frac{diam_{bar}}{2}$ $dc = 2.38\ in$ Distance from the tension face to centroid of first layer of tension reinf.

$d := depth - dc$ $\boxed{d = 9.62\ in}$ Distance from compression face to centroid of tension reinf.

ULTIMATE MOMENT CAPACITY: [AASHTO 8.16.3.1]

$a := As\_a \cdot \frac{f_y}{.85 \cdot F'c \cdot b}$ $a = 1.73\ in$

$\phi Mn := \phi_m \cdot \left[As\_a \cdot f_y \cdot \left(d - \frac{a}{2} \right) \right]$ $\phi Mn = 34.7\ kips \cdot ft$ > $Mu = 29.00\ kips \cdot ft$

MAX. FLEXURE REINF. [AASHTO 8.16.3.1.1]

$$\rho_{bal} := \frac{0.85 \cdot \beta_1 \cdot F'c}{f_y} \cdot \frac{87000 \cdot psi}{87000 \cdot psi + f_y} \qquad \rho_{bal} = 0.02138$$

$$\rho := \frac{As\_a}{b \cdot d} \qquad \rho = 0.00762 \qquad .75 \cdot \rho_{bal} = 0.01604 \quad > \quad \rho = 0.00762$$

MIN. FLEXURE REINF. [AASHTO 8.17.1.1]

$$Mc := \frac{b \cdot depth^2}{6} \cdot 7.5 \cdot \sqrt{psi} \cdot \sqrt{F'c} \qquad Mc = 9.86\,kips \cdot ft$$

CRACKING MOMENT on the basis of the modulus of rupture for normal weight concrete [AASHTO 8.15.2.1.1]

$\phi Mn = 34.7\,kips \cdot ft \quad > \quad 1.2\,Mc = 11.83\,kips \cdot ft$

OR

[AASHTO 8.17.1.2] $\phi Mn = 34.7\,kips \cdot ft \quad > \quad 1.33\,Mu = 38.57\,kips \cdot ft$

SERVICEABILITY REQUIREMENTS [AASHTO 8.16.8] - Use as general Check

$$k := \sqrt{2 \cdot n \cdot \rho + (n \cdot \rho)^2} - n \cdot \rho \qquad j := 1 - \frac{k}{3} \qquad k = 0.3081 \qquad j = 0.8973$$

$$fs_{max} := \frac{M_{max}}{As\_a \cdot j \cdot d} \qquad fs_{min} := \frac{M_{min}}{As\_a \cdot j \cdot d} \qquad fc_{max} := fs_{max} \cdot \frac{k}{n \cdot (1 - k)}$$

$fs_{max} = 23.68\,ksi \quad < \quad f_s = 24\,ksi$

$fs_{min} = 7.89\,ksi$

$fc_{max} = 1.17\,ksi \quad < \quad fc = 1.2\,ksi$

FATIGUE STRESS LIMITS [AASHTO 8.16.8.3]

$rh := .3$ (r/h) of .3 is used as a default

$f_f := 21 \cdot ksi - 0.33 \cdot fs_{min} + 8 \cdot ksi \cdot rh \qquad f_f = 20.79\,ksi \quad > \quad (fs_{max} - fs_{min}) = 15.79\,ksi$

Max. stress range for reinf. steel

DISTRIBUTION OF FLEXURAL REINFORCEMENT [AASHTO 8.16.8.4]

$dc := if[cover > 2 \cdot in, dc - (cover - 2 \cdot in), dc] \qquad dc = 2.38\,in$ Use max. cover as 2"

$$A := \frac{2 \cdot dc \cdot b}{AsNo} \qquad A = 28.5\,in^2 \qquad f_{s\_z} := \frac{z}{(dc \cdot A)^{\frac{1}{3}}} \qquad f_{s\_z} = 31.9\,ksi$$

Effective tension area of conc. surrounding 1 bar
-- formula for 1 layer of steel

$f_{s\_df} := if(f_{s\_z} \le .6 \cdot f_y, f_{s\_z}, .6 \cdot f_y) \qquad f_{s\_df} = 31.9\,ksi \quad > \quad fs_{max} = 23.68\,ksi$

SHEAR STRENGTH [AASHTO 8.16.6.1.1]

$Vu_{reqd} := \frac{Vu}{\phi_s}$ $\boxed{Vu_{reqd} = 15.06\,kips}$

Per AASHTO 3.24.4: Slabs designed for bending moment in accordance with Article 3.24.3 shall be considered satisfactory in bond and shear. Therefore, shear check is not required.

Shear Strength Provided by Concrete [AASHTO 8.16.6.2.1] (Assumes a rect. section)

$factor := \frac{Vu \cdot d}{Mu}$ $factor = 0.35$ $factor := if(factor > 1., 1., factor)$ $factor = 0.35$

$Fv_c := \begin{bmatrix} (1.9 \cdot \sqrt{psi} \cdot \sqrt{F'c} + 2500 \cdot psi \cdot \rho \cdot factor) \\ 2 \cdot \sqrt{psi} \cdot \sqrt{F'c} \end{bmatrix}$ $Fv_c = \begin{pmatrix} 110.81 \\ 109.54 \end{pmatrix} psi$

$Fvmax := 3.5 \cdot (\sqrt{psi} \cdot \sqrt{F'c})$ $Fvmax = 191.7\,psi$

$Fvc := if(max(Fv_c) < Fvmax, max(Fv_c), Fvmax)$ $Fvc = 110.81\,psi$ concrete shear strength

$Vc := Fvc \cdot b \cdot d$ $\boxed{Vc = 12.8\,kips}$ shear carried by concrete

IF $\boxed{Vc = 12.8\,kips}$ > $\boxed{Vu_{reqd} = 15.06\,kips}$ $\boxed{\text{No Shear reinf. required [AASHTO 8.19.1]}}$

If Shear Reinforcing is required [AASHTO 8.16.6.3]

$Vs_{reqd} := if(Vu_{reqd} - Vc < 0. \cdot kips, 0.000001 \cdot kips, Vu_{reqd} - Vc)$ $\boxed{Vs_{reqd} = 2.26\,kips}$

Max. shear reinf. spacing [AASHTO 8.19.1.2], AASHTO 8.19.3]

$smax := \begin{pmatrix} \frac{As\_a_s \cdot f_y}{50 \cdot psi \cdot b} \\ 24 \cdot in \\ \frac{d}{2} \end{pmatrix}$ $smax = \begin{pmatrix} 0 \\ 24 \\ 4.81 \end{pmatrix} in$ $smax := min(smax)$ $\boxed{smax = 0\,in}$

max stirrup spacing

Reduction for max spacing for high shear reinf. requirement: [AASHTO 8.16.6.3.8]

IF $\boxed{Vs_{reqd} = 2.26\,kips}$ > $\boxed{4 \cdot \sqrt{psi} \cdot \sqrt{F'c} \cdot b \cdot d = 25.3\,kips}$ Then reduce max. spacing by 1/2

$s_{max} := if(Vs_{reqd} > 4 \cdot \sqrt{psi} \cdot \sqrt{F'c} \cdot b \cdot d, .5 \cdot smax, smax)$ $\boxed{s_{max} = 0\,in}$

Max steel shear strength allowed: [AASHTO 8.16.6.3.9]

$\boxed{Vs_{reqd} = 2.26\,kips}$ < $\boxed{8 \cdot \sqrt{psi} \cdot \sqrt{F'c} \cdot b \cdot d = 50.61\,kips}$

Stirrup Spacing: [AASHTO 8.16.6.3]

$s := \frac{As\_a_s \cdot f_y \cdot d}{Vs_{reqd}}$ $s = 0\,in$

$s_{reqd} := if(s > s_{max}, s_{max}, s)$ Max. Stirrup spacing: $\boxed{s_{reqd} = 0\,in}$

CHECK CRACK CONTROL – [AASHTO 17.6.4.7]

$d = 9.62\,in$ Distance from compression face to centroid of tension reinf.

$d_c := cover + 0.5 \cdot diam_{bar}$ Thickness of cover from tension fiber to center of tension reinf.

$\beta := 1 + \frac{d_c}{.7 \cdot (d)}$ $\beta = 1.35$ $A = 28.5\,in^2$ Effective tension area of conc. surrounding 1 bar. (1 layer of steel)

$f_s := \frac{155}{\beta \cdot \sqrt[3]{d_c \cdot A}} \cdot \frac{kip}{in}$ $fs_{ck} := if(f_s \le .6 \cdot f_y, f_s, .6 \cdot f_y)$

$f_s = 28.12\,ksi$ $fs_{ck} = 28.12\,ksi$ $\boxed{\frac{fs_{ck}}{fs_{max}} = 1.19} > \boxed{1.0}$

Kimley-Horn and Associates, Inc.

Job McDowell Road Subject Structure #12 Walls M+ Project No. 091131012

Designed by KJK Date 05/18/06 Checked by_____ Date_____

AASHTO 17th Edition LFD R/C Beam Design

REFERENCE: AASHTO 17th Edition, 2002

Note: Input parameters are in yellow highlight. Checks for adequacy are in blue highlight with border

Base Units: ft = 1L lb = 1M sec = 1T K= 1K lbf = force

Define Units: $kips := 1000 \cdot lbf$ $degF := 1 \cdot K$ $ksi := 1000psi$

DESIGN LOCATION: WALLS M+

MATERIAL PROPERTIES:

CONCRETE :

$F'c := 3 \cdot ksi$ Concrete compressive strength

$z := 130 \frac{kips}{in}$ Quantity limiting distribution of flexural reinf. [AASHTO 8.16.8.4]

$W_c := .15 \cdot \frac{kips}{ft^3}$ [UNIT FORCE -- AASHTO 3.3.6]

REINFORCING STEEL :

$f_y := 60.0 \cdot ksi$ [Grade 60]

$f_s := 24.0 \cdot ksi$ [AASHTO 8.15.2.2 SERVICE LOAD]

$E_s := 29000ksi$ [AASHTO 8.7.2]

$\phi_m := .90$ Flexure - strength reduction factor [AASHTO 8.16.1.2.2]

$\phi_s := .85$ Shear - strength reduction factor [AASHTO 8.16.1.2.2]

CALCULATED MATERIAL PROPERTIES:

$fc := .4 \cdot F'c$ $fc = 1.2ksi$ [SERVICE LOAD]

$E_c := W_c^{1.5} \cdot 33 \cdot \sqrt{F'c} \cdot \left(\frac{ft^3}{lbf}\right)^{1.5} \cdot \sqrt{psi}$ $E_c = 3320.56\,ksi$ Elastic Modulus for concrete [AASHTO 8.7.1]

$n := floor\left(\frac{E_s}{E_c}\right) + if\left[.5 > \left(\frac{E_s}{E_c}\right) - floor\left(\frac{E_s}{E_c}\right), 0, 1\right]$ $n = 9$ Modular Ratio [AASHTO 8.15.3.4]

$\beta_1 := if\left[F'c \le 4 \cdot ksi, .85, .85 - (F'c - 4 \cdot ksi) \cdot .05 \cdot \frac{1}{ksi}\right]$ $\beta_1 = 0.85$ FOR $F'c < 4ksi$ $\beta_1 = .85$ [AASHTO 8.16.2.7]

DESIGN LOADS:

LOAD FACTOR	SERVICE LOAD	
$Mu := 1.5 \cdot kips \cdot ft$	$M_{max} := 1.2 \cdot kips \cdot ft$	Use service load to check serviceabilty requirements
$Vu := 1.6 \cdot kips$	$M_{min} := 1.2 \cdot kips \cdot ft$	

GEOMETRY:

$b := 1 \cdot ft$ Width of compression flange $depth := 0.833 \cdot ft$ Gross depth of section

REINFORCING STEEL:

$cover := 2 \cdot in$ Clear cover to stirrups [AASHTO 8.22.1]

Use # $bar := 6$ **--- Moment reinforcement**

$AsNo := 1$ Total number of bars used Total Area of Reinforcing steel

$A_{bar} = 0.44\ in^2$ Bar area $As\_a := AsNo \cdot A_{bar}$

$diam_{bar} = 0.75\ in$ Bar dia. $As\_a = 0.44\ in^2$ Total area of flexure reinforcing

Use # $bar_s := 0$ **--- Shear reinforcement**

$AsNo_s := 0$ Total number of legs used Total Area of Reinforcing steel

$A_{bar_s} = 0\ in^2$ Bar area $As\_a_s := AsNo_s \cdot A_{bar_s}$

$diam_{bar_s} = 0\ in$ Bar dia. $As\_a_s = 0\ in^2$ Total area of shear reinforcing

Calc. the dc & d to tension reinf.:

$dc := cover + diam_{bar_s} + \frac{diam_{bar}}{2}$ $dc = 2.38\ in$ Distance from the tension face to centroid of first layer of tension reinf.

$d := depth - dc$ $d = 7.62\ in$ Distance from compression face to centroid of tension reinf.

ULTIMATE MOMENT CAPACITY: [AASHTO 8.16.3.1]

$a := As\_a \cdot \frac{f_y}{.85 \cdot F'c \cdot b}$ $a = 0.86\ in$

$\phi Mn := \phi_m \cdot \left[As\_a \cdot f_y \cdot \left(d - \frac{a}{2} \right) \right]$ $\phi Mn = 14.24\ kips \cdot ft$ > $Mu = 1.50\ kips \cdot ft$

MAX. FLEXURE REINF. [AASHTO 8.16.3.1.1]

$$\rho_{bal} := \frac{0.85 \cdot \beta_1 \cdot F'c}{f_y} \cdot \frac{87000 \cdot psi}{87000 \cdot psi + f_y} \qquad \rho_{bal} = 0.02138$$

$$\rho := \frac{As\_a}{b \cdot d} \qquad \rho = 0.00481 \qquad .75 \cdot \rho_{bal} = 0.01604 \quad > \quad \rho = 0.00481$$

MIN. FLEXURE REINF. [AASHTO 8.17.1.1]

$$Mc := \frac{b \cdot depth^2}{6} \cdot 7.5 \cdot \sqrt{psi} \cdot \sqrt{F'c} \qquad Mc = 6.84\ kips \cdot ft$$

CRACKING MOMENT on the basis of the modulus of rupture for normal weight concrete [AASHTO 8.15.2.1.1]

$\phi Mn = 14.24\ kips \cdot ft \quad > \quad 1.2 \cdot Mc = 8.21\ kips \cdot ft$

OR

[AASHTO 8.17.1.2] $\phi Mn = 14.24\ kips \cdot ft \quad > \quad 1.33 Mu = 2\ kips \cdot ft$

SERVICEABILITY REQUIREMENTS [AASHTO 8.16.8] - Use as general Check

$$k := \sqrt{2 \cdot n \cdot \rho + (n \cdot \rho)^2} - n \cdot \rho \qquad j := 1 - \frac{k}{3} \qquad k = 0.2542 \qquad j = 0.9153$$

$$fs_{max} := \frac{M_{max}}{As\_a \cdot j \cdot d} \qquad fs_{min} := \frac{M_{min}}{As\_a \cdot j \cdot d} \qquad fc_{max} := fs_{max} \cdot \frac{k}{n \cdot (1 - k)}$$

$fs_{max} = 4.69\ ksi \quad < \quad f_s = 24\ ksi$

$fs_{min} = 4.69\ ksi$

$fc_{max} = 0.18\ ksi \quad < \quad fc = 1.2\ ksi$

FATIGUE STRESS LIMITS [AASHTO 8.16.8.3]

$rh := .3$ (r/h) of .3 is used as a default

$f_f := 21.\cdot ksi - 0.33 \cdot fs_{min} + 8.\cdot ksi \cdot rh \qquad f_f = 21.85\ ksi \quad > \quad (fs_{max} - fs_{min}) = 0\ ks$

Max. stress range for reinf. steel

DISTRIBUTION OF FLEXURAL REINFORCEMENT [AASHTO 8.16.8.4]

$dc := if[cover > 2 \cdot in, dc - (cover - 2 \cdot in), dc] \qquad dc = 2.38\ in$ Use max. cover as 2"

$$A := \frac{2 \cdot dc \cdot b}{AsNo} \qquad A = 57\ in^2 \qquad f_{s\_z} := \frac{z}{(dc \cdot A)^{\frac{1}{3}}} \qquad f_{s\_z} = 25.32\ ksi$$

Effective tension area of conc. surrounding 1 bar
-- formula for 1 layer of steel

$f_{s\_df} := if(f_{s\_z} \le .6 \cdot f_y, f_{s\_z}, .6 \cdot f_y) \qquad f_{s\_df} = 25.32\ ksi \quad > \quad fs_{max} = 4.69\ ksi$

SHEAR STRENGTH [AASHTO 8.16.6.1.1]

$Vu_{reqd} := \frac{Vu}{\phi_s}$ $\boxed{Vu_{reqd} = 1.88\,kips}$

Shear Strength Provided by Concrete [AASHTO 8.16.6.2.1] (Assumes a rect. section)

$factor := \frac{Vu \cdot d}{Mu}$ $factor = 0.68$ $factor := if(factor > 1., 1., factor)$ $factor = 0.68$

$Fv_c := \begin{bmatrix} (1.9 \cdot \sqrt{psi} \cdot \sqrt{F'c} + 2500 \cdot psi \cdot \rho \cdot factor) \\ 2 \cdot \sqrt{psi} \cdot \sqrt{F'c} \end{bmatrix}$ $Fv_c = \begin{pmatrix} 112.22 \\ 109.54 \end{pmatrix} psi$

$Fvmax := 3.5 \cdot (\sqrt{psi} \cdot \sqrt{F'c})$ $Fvmax = 191.7\,psi$

$Fvc := if(max(Fv_c) < Fvmax, max(Fv_c), Fvmax)$ $Fvc = 112.22\,psi$ concrete shear strength

$Vc := Fvc \cdot b \cdot d$ $\boxed{Vc = 10.26\,kips}$ shear carried by concrete

IF $\boxed{Vc = 10.26\,kips}$ > $\boxed{Vu_{reqd} = 1.88\,kips}$ $\boxed{\text{No Shear reinf. required [AASHTO 8.19.1]}}$

If Shear Reinforcing is required [AASHTO 8.16.6.3]

$Vs_{reqd} := if(Vu_{reqd} - Vc < 0. \cdot kips, 0.000001 \cdot kips, Vu_{reqd} - Vc)$ $\boxed{Vs_{reqd} = 0\,kips}$

Max. shear reinf. spacing [AASHTO 8.19.1.2], AASHTO 8.19.3]

$smax := \begin{pmatrix} \frac{As\_a_s \cdot f_y}{50 \cdot psi \cdot b} \\ 24 \cdot in \\ \frac{d}{2} \end{pmatrix}$ $smax = \begin{pmatrix} 0 \\ 24 \\ 3.81 \end{pmatrix} in$ $smax := min(smax)$ $\boxed{smax = 0\,in}$

max stirrup spacing

Reduction for max spacing for high shear reinf. requirement: [AASHTO 8.16.6.3.8]

IF $\boxed{Vs_{reqd} = 0\,kips}$ > $\boxed{4 \cdot \sqrt{psi} \cdot \sqrt{F'c} \cdot b \cdot d = 20.04\,kips}$ Then reduce max. spacing by 1/2

$s_{max} := if(Vs_{reqd} > 4 \cdot \sqrt{psi} \cdot \sqrt{F'c} \cdot b \cdot d, .5 \cdot smax, smax)$ $\boxed{s_{max} = 0\,in}$

Max steel shear strength allowed: [AASHTO 8.16.6.3.9]

$\boxed{Vs_{reqd} = 0\,kips}$ < $\boxed{8 \cdot \sqrt{psi} \cdot \sqrt{F'c} \cdot b \cdot d = 40.07\,kips}$

Stirrup Spacing: [AASHTO 8.16.6.3]

$s := \frac{As\_a_s \cdot f_y \cdot d}{Vs_{reqd}}$ $s = 0\,in$

$s_{reqd} := if(s > s_{max}, s_{max}, s)$ Max. Stirrup spacing: $\boxed{s_{reqd} = 0\,in}$

CHECK CRACK CONTROL -- [AASHTO 17.6.4.7]

$d = 7.62\,in$ Distance from compression face to centroid of tension reinf.

$d_c := cover + 0.5 \cdot diam_{bar}$ Thickness of cover from tension fiber to center of tension reinf.

$\beta := 1 + \frac{d_c}{.7 \cdot (d)}$ $\beta = 1.45$ $A = 57\,in^2$ Effective tension area of conc. surrounding 1 bar. (1 layer of steel)

$f_s := \frac{155}{\beta \cdot \sqrt[3]{d_c \cdot A}} \cdot \frac{kip}{in}$

$fs_{ck} := if(f_s \le .6 \cdot f_y, f_s, .6 \cdot f_y)$

$fs_{ck} = 20.89\,ksi$

$f_s = 20.89\,ksi$

$\frac{fs_{ck}}{fs_{max}} = 4.45$ > 1.0 ✓

Kimley-Horn and Associates, Inc.

Job McDowell Road Subject Structure #12 Walls M- Project No. 091131012

Designed by KJK Date 05/18/06 Checked by_____ Date_____

AASHTO 17th Edition LFD R/C Beam Design

REFERENCE: AASHTO 17th Edition, 2002

Note: Input parameters are in yellow highlight. Checks for adequacy are in blue highlight with border

Base Units: ft = 1L lb = 1M sec = 1T K= 1K lbf = force

Define Units: kips := 1000·lbf degF := 1·K ksi := 1000psi

DESIGN LOCATION: WALLS M-

MATERIAL PROPERTIES:

CONCRETE :

$F'c := 3 \cdot ksi$ Concrete compressive strength

$z := 130 \frac{kips}{in}$ Quantity limiting distribution of flexural reinf. [AASHTO 8.16.8.4]

$W_c := .15 \cdot \frac{kips}{ft^3}$ [UNIT FORCE -- AASHTO 3.3.6]

REINFORCING STEEL :

$f_y := 60.0 \cdot ksi$ [Grade 60]

$f_s := 24.0 \cdot ksi$ [AASHTO 8.15.2.2 SERVICE LOAD]

$E_s := 29000ksi$ [AASHTO 8.7.2]

$\phi_m := .90$ Flexure - strength reduction factor [AASHTO 8.16.1.2.2]

$\phi_s := .85$ Shear - strength reduction factor [AASHTO 8.16.1.2.2]

CALCULATED MATERIAL PROPERTIES:

$fc := .4 \cdot F'c$ $\boxed{fc = 1.2ksi}$ [SERVICE LOAD]

$E_c := W_c^{1.5} \cdot 33 \cdot \sqrt{F'c} \cdot \left(\frac{ft^3}{lbf}\right)^{1.5} \cdot \sqrt{psi}$ $\boxed{E_c = 3320.56\,ksi}$ Elastic Modulus for concrete [AASHTO 8.7.1]

$n := floor\left(\frac{E_s}{E_c}\right) + if\left[.5 > \left(\frac{E_s}{E_c}\right) - floor\left(\frac{E_s}{E_c}\right), 0, 1\right]$ $\boxed{n = 9}$ Modular Ratio [AASHTO 8.15.3.4]

$\beta_1 := if\left[F'c \le 4.\cdot ksi, .85, .85 - (F'c - 4 \cdot ksi) \cdot .05 \cdot \frac{1}{ksi}\right]$ $\boxed{\beta_1 = 0.85}$ FOR F'c < 4ksi β_1 = .85 [AASHTO 8.16.2.7]

DESIGN LOADS:

LOAD FACTOR	SERVICE LOAD	
$Mu := 2.0 \cdot kips \cdot ft$	$M_{max} := 1.6 \cdot kips \cdot ft$	Use service load to check serviceabilty requirements
$Vu := 1.3 \cdot kips$	$M_{min} := 1.6 \cdot kips \cdot ft$	

GEOMETRY:

$b := 1 \cdot ft$ Width of compression flange $depth := 0.833 \cdot ft$ Gross depth of section

REINFORCING STEEL:

$cover := 2 \cdot in$ Clear cover to stirrups [AASHTO 8.22.1]

Use # $bar := 6$ **--- Moment reinforcement**

$AsNo := 1$ Total number of bars used Total Area of Reinforcing steel

$A_{bar} = 0.44\ in^2$ Bar area $As\_a := AsNo \cdot A_{bar}$

$diam_{bar} = 0.75\ in$ Bar dia. $As\_a = 0.44\ in^2$ Total area of flexure reinforcing

Use # $bar_s := 0$ **--- Shear reinforcement**

$AsNo_s := 0$ Total number of legs used Total Area of Reinforcing steel

$A_{bar_s} = 0\ in^2$ Bar area $As\_a_s := AsNo_s \cdot A_{bar_s}$

$diam_{bar_s} = 0\ in$ Bar dia. $As\_a_s = 0\ in^2$ Total area of shear reinforcing

Calc. the dc & d to tension reinf.:

$dc := cover + diam_{bar_s} + \frac{diam_{bar}}{2}$ $dc = 2.38\ in$ Distance from the tension face to centroid of first layer of tension reinf.

$d := depth - dc$ $\boxed{d = 7.62\ in}$ Distance from compression face to centroid of tension reinf.

ULTIMATE MOMENT CAPACITY: [AASHTO 8.16.3.1]

$a := As\_a \cdot \frac{f_y}{.85 \cdot F'c \cdot b}$ $a = 0.86\ in$

$\phi Mn := \phi_m \cdot \left[As\_a \cdot f_y \cdot \left(d - \frac{a}{2} \right) \right]$ $\boxed{\phi Mn = 14.24\ kips \cdot ft}$ > $\boxed{Mu = 2.00\ kips \cdot ft}$

MAX. FLEXURE REINF. [AASHTO 8.16.3.1.1]

$$\rho_{bal} := \frac{0.85 \cdot \beta_1 \cdot F'c}{f_y} \cdot \frac{87000 \cdot psi}{87000 \cdot psi + f_y} \qquad \rho_{bal} = 0.02138$$

$$\rho := \frac{As\_a}{b \cdot d} \qquad \rho = 0.00481 \qquad .75 \cdot \rho_{bal} = 0.01604 \quad > \quad \rho = 0.00481$$

MIN. FLEXURE REINF. [AASHTO 8.17.1.1]

$$Mc := \frac{b \cdot depth^2}{6} \cdot 7.5 \cdot \sqrt{psi} \cdot \sqrt{F'c} \qquad Mc = 6.84\ kips \cdot ft$$

CRACKING MOMENT on the basis of the modulus of rupture for normal weight concrete [AASHTO 8.15.2.1.1]

$$\phi Mn = 14.24\ kips \cdot ft \quad > \quad 1.2 \cdot Mc = 8.21\ kips \cdot ft$$

OR

[AASHTO 8.17.1.2] $\phi Mn = 14.24\ kips \cdot ft \quad > \quad 1.33 Mu = 2.66\ kips \cdot ft$

SERVICEABILITY REQUIREMENTS [AASHTO 8.16.8] - Use as general Check

$$k := \sqrt{2 \cdot n \cdot \rho + (n \cdot \rho)^2} - n \cdot \rho \qquad j := 1 - \frac{k}{3} \qquad k = 0.2542 \qquad j = 0.9153$$

$$fs_{max} := \frac{M_{max}}{As\_a \cdot j \cdot d} \qquad fs_{min} := \frac{M_{min}}{As\_a \cdot j \cdot d} \qquad fc_{max} := fs_{max} \cdot \frac{k}{n \cdot (1 - k)}$$

$$fs_{max} = 6.26\ ksi \quad < \quad f_s = 24\ ksi$$

$$fs_{min} = 6.26\ ksi$$

$$fc_{max} = 0.24\ ksi \quad < \quad fc = 1.2\ ksi$$

FATIGUE STRESS LIMITS [AASHTO 8.16.8.3]

$rh := .3$ (r/h) of .3 is used as a default

$$f_f := 21.\cdot ksi - 0.33 \cdot fs_{min} + 8.\cdot ksi \cdot rh \qquad f_f = 21.34\ ksi \quad > \quad (fs_{max} - fs_{min}) = 0\ ksi$$

Max. stress range for reinf. steel

DISTRIBUTION OF FLEXURAL REINFORCEMENT [AASHTO 8.16.8.4]

$$dc := if[cover > 2 \cdot in, dc - (cover - 2 \cdot in), dc] \qquad dc = 2.38\ in$$

Use max. cover as 2"

$$A := \frac{2 \cdot dc \cdot b}{AsNo} \qquad A = 57\ in^2 \qquad f_{s\_z} := \frac{z}{(dc \cdot A)^{\frac{1}{3}}} \qquad f_{s\_z} = 25.32\ ksi$$

Effective tension area of conc. surrounding 1 bar
-- formula for 1 layer of steel

$$f_{s\_df} := if(f_{s\_z} \le .6 \cdot f_y, f_{s\_z}, .6 \cdot f_y) \qquad f_{s\_df} = 25.32\ ksi \quad > \quad fs_{max} = 6.26\ ksi$$

SHEAR STRENGTH [AASHTO 8.16.6.1.1]

$Vu_{reqd} := \frac{Vu}{\phi_s}$ $\boxed{Vu_{reqd} = 1.53\,kips}$

Shear Strength Provided by Concrete [AASHTO 8.16.6.2.1] (Assumes a rect. section)

$factor := \frac{Vu \cdot d}{Mu}$ $factor = 0.41$ $factor := if(factor > 1., 1., factor)$ $factor = 0.41$

$Fv_c := \begin{bmatrix} (1.9 \cdot \sqrt{psi} \cdot \sqrt{F'c} + 2500 \cdot psi \cdot \rho \cdot factor) \\ 2 \cdot \sqrt{psi} \cdot \sqrt{F'c} \end{bmatrix}$ $Fv_c = \begin{pmatrix} 109.03 \\ 109.54 \end{pmatrix} psi$

$Fvmax := 3.5 \cdot (\sqrt{psi} \cdot \sqrt{F'c})$ $Fvmax = 191.7\,psi$

$Fvc := if(max(Fv_c) < Fvmax, max(Fv_c), Fvmax)$ $Fvc = 109.54\,psi$ concrete shear strength

$Vc := Fvc \cdot b \cdot d$ $\boxed{Vc = 10.02\,kips}$ shear carried by concrete

IF $\boxed{Vc = 10.02\,kips}$ > $\boxed{Vu_{reqd} = 1.53\,kips}$ $\boxed{\text{No Shear reinf. required [AASHTO 8.19.1]}}$ ✓

If Shear Reinforcing is required [AASHTO 8.16.6.3]

$Vs_{reqd} := if(Vu_{reqd} - Vc < 0. \cdot kips, 0.000001 \cdot kips, Vu_{reqd} - Vc)$ $\boxed{Vs_{reqd} = 0\,kips}$

Max. shear reinf. spacing [AASHTO 8.19.1.2], AASHTO 8.19.3]

$smax := \begin{pmatrix} \frac{As\_a_s \cdot f_y}{50 \cdot psi \cdot b} \\ 24 \cdot in \\ \frac{d}{2} \end{pmatrix}$ $smax = \begin{pmatrix} 0 \\ 24 \\ 3.81 \end{pmatrix} in$ $smax := min(smax)$ $\boxed{smax = 0\,in}$

max stirrup spacing

Reduction for max spacing for high shear reinf. requirement: [AASHTO 8.16.6.3.8]

IF $\boxed{Vs_{reqd} = 0\,kips}$ > $\boxed{4 \cdot \sqrt{psi} \cdot \sqrt{F'c} \cdot b \cdot d = 20.04\,kips}$ Then reduce max. spacing by 1/2

$s_{max} := if(Vs_{reqd} > 4 \cdot \sqrt{psi} \cdot \sqrt{F'c} \cdot b \cdot d, .5 \cdot smax, smax)$ $\boxed{s_{max} = 0\,in}$

Max steel shear strength allowed: [AASHTO 8.16.6.3.9]

$\boxed{Vs_{reqd} = 0\,kips}$ < $\boxed{8 \cdot \sqrt{psi} \cdot \sqrt{F'c} \cdot b \cdot d = 40.07\,kips}$ ✓

Stirrup Spacing: [AASHTO 8.16.6.3]

$s := \frac{As\_a_s \cdot f_y \cdot d}{Vs_{reqd}}$ $s = 0\,in$

$s_{reqd} := if(s > s_{max}, s_{max}, s)$ Max. Stirrup spacing: $\boxed{s_{reqd} = 0\,in}$ ✓

CHECK CRACK CONTROL -- [AASHTO 17.6.4.7]

$d = 7.62\,in$ Distance from compression face to centroid of tension reinf.

$d_c := cover + 0.5 \cdot diam_{bar}$ Thickness of cover from tension fiber to center of tension reinf.

$\beta := 1 + \frac{d_c}{.7 \cdot (d)}$ $\beta = 1.45$ $A = 57\,in^2$ Effective tension area of conc. surrounding 1 bar. (1 layer of steel)

$f_s := \frac{155}{\beta \cdot \sqrt[3]{d_c \cdot A}} \cdot \frac{kip}{in}$

$fs_{ck} := if(f_s \le .6 \cdot f_y, f_s, .6 \cdot f_y)$

$fs_{ck} = 20.89\,ksi$

$f_s = 20.89\,ksi$

$\frac{fs_{ck}}{fs_{max}} = 3.34$ > 1.0 ✓

Kimley-Horn and Associates, Inc.

Job McDowell Road Subject Structure #12 Btm Slab M+ Project No. 091131012

Designed by KJK Date 05/18/06 Checked by _____ Date _____

AASHTO 17th Edition LFD R/C Beam Design

REFERENCE: AASHTO 17th Edition, 2002

Note: Input parameters are in yellow highlight. Checks for adequacy are in blue highlight with border.

Base Units: ft = 1L lb = 1M sec = 1T K = 1K lbf = force

Define Units: kips := 1000·lbf degF := 1·K ksi := 1000psi

DESIGN LOCATION: BOTTOM SLAB M+

MATERIAL PROPERTIES:

CONCRETE :

$F'c := 3 \cdot ksi$ Concrete compressive strength

$z := 130 \frac{kips}{in}$ Quantity limiting distribution of flexural reinf. [AASHTO 8.16.8.4]

$W_c := .15 \cdot \frac{kips}{ft^3}$ [UNIT FORCE -- AASHTO 3.3.6]

REINFORCING STEEL :

$f_y := 60.0 \cdot ksi$ [Grade 60]

$f_s := 24.0 \cdot ksi$ [AASHTO 8.15.2.2 SERVICE LOAD]

$E_s := 29000ksi$ [AASHTO 8.7.2]

$\phi_m := .90$ Flexure - strength reduction factor [AASHTO 8.16.1.2.2]

$\phi_s := .85$ Shear - strength reduction factor [AASHTO 8.16.1.2.2]

CALCULATED MATERIAL PROPERTIES:

$fc := .4 \cdot F'c$ $fc = 1.2ksi$ [SERVICE LOAD]

$E_c := W_c^{1.5} \cdot 33 \cdot \sqrt{F'c} \cdot \left(\frac{ft^3}{lbf}\right)^{1.5} \cdot \sqrt{psi}$ $E_c = 3320.56\,ksi$ Elastic Modulus for concrete [AASHTO 8.7.1]

$n := floor\left(\frac{E_s}{E_c}\right) + if\left[.5 > \left(\frac{E_s}{E_c}\right) - floor\left(\frac{E_s}{E_c}\right), 0, 1\right]$ $n = 9$ Modular Ratio [AASHTO 8.15.3.4]

$\beta_1 := if\left[F'c \le 4.\cdot ksi, .85, .85 - (F'c - 4 \cdot ksi) \cdot .05 \cdot \frac{1}{ksi}\right]$ $\beta_1 = 0.85$ FOR F'c < 4ksi β_1 = .85 [AASHTO 8.16.2.7]

DESIGN LOADS:

LOAD FACTOR	SERVICE LOAD	
$Mu := 15 \cdot kips \cdot ft$	$M_{max} := 10 \cdot kips \cdot ft$	Use service load to check serviceabilty requirements
$Vu := 6 \cdot kips$	$M_{min} := 5 \cdot kips \cdot ft$	

GEOMETRY:

$b := 1 \cdot ft$ Width of compression flange $depth := 1.0 \cdot ft$ Gross depth of section

REINFORCING STEEL:

$cover := 3 \cdot in$ Clear cover to stirrups [AASHTO 8.22.1]

Use # $bar := 6$ **--- Moment reinforcement**

$AsNo := 2$ Total number of bars used Total Area of Reinforcing steel

$A_{bar} = 0.44\ in^2$ Bar area $As\_a := AsNo \cdot A_{bar}$

$diam_{bar} = 0.75\ in$ Bar dia. $As\_a = 0.88\ in^2$ Total area of flexure reinforcing

Use # $bar_s := 0$ **--- Shear reinforcement**

$AsNo_s := 0$ Total number of legs used Total Area of Reinforcing steel

$A_{bar_s} = 0\ in^2$ Bar area $As\_a_s := AsNo_s \cdot A_{bar_s}$

$diam_{bar_s} = 0\ in$ Bar dia. $As\_a_s = 0\ in^2$ Total area of shear reinforcing

Calc. the dc & d to tension reinf.:

$dc := cover + diam_{bar_s} + \frac{diam_{bar}}{2}$ $dc = 3.38\ in$ Distance from the tension face to centroid of first layer of tension reinf.

$d := depth - dc$ $d = 8.63\ in$ Distance from compression face to centroid of tension reinf.

ULTIMATE MOMENT CAPACITY: [AASHTO 8.16.3.1]

$a := As\_a \cdot \frac{f_y}{.85 \cdot F'c \cdot b}$ $a = 1.73\ in$

$\phi Mn := \phi_m \cdot \left[As\_a \cdot f_y \cdot \left(d - \frac{a}{2} \right) \right]$ $\phi Mn = 30.74\ kips \cdot ft$ > $Mu = 15.00\ kips \cdot ft$

MAX. FLEXURE REINF. [AASHTO 8.16.3.1.1]

$$\rho_{bal} := \frac{0.85 \cdot \beta_1 \cdot F'c}{f_y} \cdot \frac{87000 \cdot psi}{87000 \cdot psi + f_y} \qquad \rho_{bal} = 0.02138$$

$$\rho := \frac{As\_a}{b \cdot d} \qquad \rho = 0.0085$$

$.75 \cdot \rho_{bal} = 0.01604$ > $\rho = 0.0085$

MIN. FLEXURE REINF. [AASHTO 8.17.1.1]

$$Mc := \frac{b \cdot depth^2}{6} \cdot 7.5 \cdot \sqrt{psi} \cdot \sqrt{F'c} \qquad Mc = 9.86\ kips \cdot ft$$

CRACKING MOMENT on the basis of the modulus of rupture for normal weight concrete [AASHTO 8.15.2.1.1]

$\phi Mn = 30.74\ kips \cdot ft$ > $1.2 \cdot Mc = 11.83\ kips \cdot ft$

OR

[AASHTO 8.17.1.2] $\phi Mn = 30.74\ kips \cdot ft$ > $1.33 Mu = 19.95\ kips \cdot ft$

SERVICEABILITY REQUIREMENTS [AASHTO 8.16.8] - Use as general Check

$$k := \sqrt{2 \cdot n \cdot \rho + (n \cdot \rho)^2} - n \cdot \rho \qquad j := 1 - \frac{k}{3} \qquad k = 0.3221$$

$$j = 0.8926$$

$$fs_{max} := \frac{M_{max}}{As\_a \cdot j \cdot d} \qquad fs_{min} := \frac{M_{min}}{As\_a \cdot j \cdot d} \qquad fc_{max} := fs_{max} \cdot \frac{k}{n \cdot (1 - k)}$$

$fs_{max} = 17.71\ ksi$ < $f_s = 24\ ksi$

$fs_{min} = 8.86\ ksi$

$fc_{max} = 0.94\ ksi$ < $fc = 1.2\ ksi$

FATIGUE STRESS LIMITS [AASHTO 8.16.8.3]

$rh := .3$ (r/h) of .3 is used as a default

$f_f := 21.\cdot ksi - 0.33 \cdot fs_{min} + 8.\cdot ksi \cdot rh$ $\qquad f_f = 20.48\ ksi$ > $(fs_{max} - fs_{min}) = 8.86\ ksi$

Max. stress range for reinf. steel

DISTRIBUTION OF FLEXURAL REINFORCEMENT [AASHTO 8.16.8.4]

$dc := if[cover > 2 \cdot in, dc - (cover - 2 \cdot in), dc]$ $\qquad dc = 2.38\ in$ $\qquad$ Use max. cover as 2"

$$A := \frac{2 \cdot dc \cdot b}{AsNo} \qquad A = 28.5\ in^2 \qquad f_{s\_z} := \frac{z}{(dc \cdot A)^{\frac{1}{3}}} \qquad f_{s\_z} = 31.9\ ksi$$

Effective tension area of conc. surrounding 1 bar
-- formula for 1 layer of steel

$f_{s\_df} := if(f_{s\_z} \le .6 \cdot f_y, f_{s\_z}, .6 \cdot f_y)$ $\qquad f_{s\_df} = 31.9\ ksi$ > $fs_{max} = 17.71\ ksi$

SHEAR STRENGTH [AASHTO 8.16.6.1.1]

$Vu_{reqd} := \frac{Vu}{\phi_s}$ $\boxed{Vu_{reqd} = 7.06\,kips}$

Shear Strength Provided by Concrete [AASHTO 8.16.6.2.1] (Assumes a rect. section)

$factor := \frac{Vu \cdot d}{Mu}$ $factor = 0.29$ $factor := if(factor > 1., 1., factor)$ $factor = 0.29$

$Fv_c := \begin{bmatrix} (1.9 \cdot \sqrt{psi} \cdot \sqrt{F'c} + 2500 \cdot psi \cdot \rho \cdot factor) \\ 2 \cdot \sqrt{psi} \cdot \sqrt{F'c} \end{bmatrix}$ $Fv_c = \begin{pmatrix} 110.18 \\ 109.54 \end{pmatrix} psi$

$Fvmax := 3.5 \cdot (\sqrt{psi} \cdot \sqrt{F'c})$ $Fvmax = 191.7\,psi$

$Fvc := if(max(Fv_c) < Fvmax, max(Fv_c), Fvmax)$ $Fvc = 110.18\,psi$ concrete shear strength

$Vc := Fvc \cdot b \cdot d$ $\boxed{Vc = 11.4\,kips}$ shear carried by concrete

IF $\boxed{Vc = 11.4\,kips}$ > $\boxed{Vu_{reqd} = 7.06\,kips}$ $\boxed{\text{No Shear reinf. required [AASHTO 8.19.1]}}$ ✓

If Shear Reinforcing is required [AASHTO 8.16.6.3]

$Vs_{reqd} := if(Vu_{reqd} - Vc < 0. \cdot kips, 0.000001 \cdot kips, Vu_{reqd} - Vc)$ $\boxed{Vs_{reqd} = 0\,kips}$

Max. shear reinf. spacing [AASHTO 8.19.1.2], AASHTO 8.19.3]

$smax := \begin{pmatrix} \frac{As\_a_s \cdot f_y}{50 \cdot psi \cdot b} \\ 24 \cdot in \\ \frac{d}{2} \end{pmatrix}$ $smax = \begin{pmatrix} 0 \\ 24 \\ 4.31 \end{pmatrix} in$ $smax := min(smax)$ $\boxed{smax = 0\,in}$

max stirrup spacing

Reduction for max spacing for high shear reinf. requirement: [AASHTO 8.16.6.3.8]

IF $\boxed{Vs_{reqd} = 0\,kips}$ > $\boxed{4 \cdot \sqrt{psi} \cdot \sqrt{F'c} \cdot b \cdot d = 22.68\,kips}$ Then reduce max. spacing by 1/2

$s_{max} := if(Vs_{reqd} > 4 \cdot \sqrt{psi} \cdot \sqrt{F'c} \cdot b \cdot d, .5 \cdot smax, smax)$ $\boxed{s_{max} = 0\,in}$

Max steel shear strength allowed: [AASHTO 8.16.6.3.9]

$\boxed{Vs_{reqd} = 0\,kips}$ < $\boxed{8 \cdot \sqrt{psi} \cdot \sqrt{F'c} \cdot b \cdot d = 45.35\,kips}$ ✓

Stirrup Spacing: [AASHTO 8.16.6.3]

$s := \frac{As\_a_s \cdot f_y \cdot d}{Vs_{reqd}}$ $s = 0\,in$

$s_{reqd} := if(s > s_{max}, s_{max}, s)$ Max. Stirrup spacing: $\boxed{s_{reqd} = 0\,in}$ ✓

CHECK CRACK CONTROL -- [AASHTO 17.6.4.7]

$d = 8.63\,in$ — Distance from compression face to centroid of tension reinf.

$d_c := cover + 0.5 \cdot diam_{bar}$ — Thickness of cover from tension fiber to center of tension reinf.

$\beta := 1 + \frac{d_c}{.7 \cdot (d)}$ $\quad \beta = 1.56$ $\quad A = 28.5\,in^2$ — Effective tension area of conc. surrounding 1 bar. (1 layer of steel).

$f_s := \frac{155}{\beta \cdot \sqrt[3]{d_c \cdot A}} \cdot \frac{kip}{in}$

$fs_{ck} := if(f_s \le .6 \cdot f_y, f_s, .6 \cdot f_y)$

$fs_{ck} = 21.7\,ksi$

$f_s = 21.7\,ksi$

$\frac{fs_{ck}}{f_{s_{max}}} = 1.23 > 1.0$ ✓

STRUCTURE #13

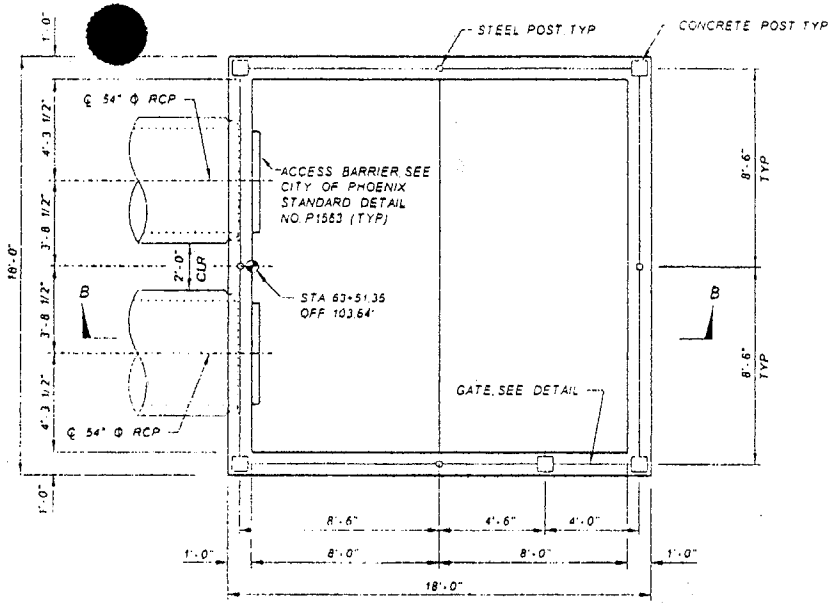

PLAN
SCALE 3/8" = 1'-0"

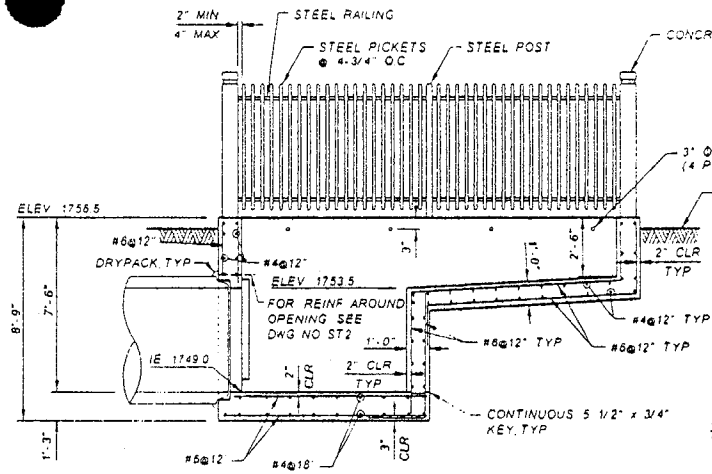

SECTION B-B
SCALE 3/8" = 1'-0"

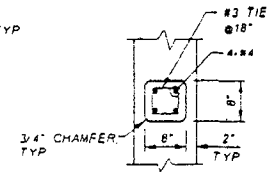

SECTION C-C
SCALE 1" = 1'-0"

NOTE

CONCRETE COLOR SHALL MATCH REQUIREMENTS SPECIFIED IN SPECIAL PROVISIONS

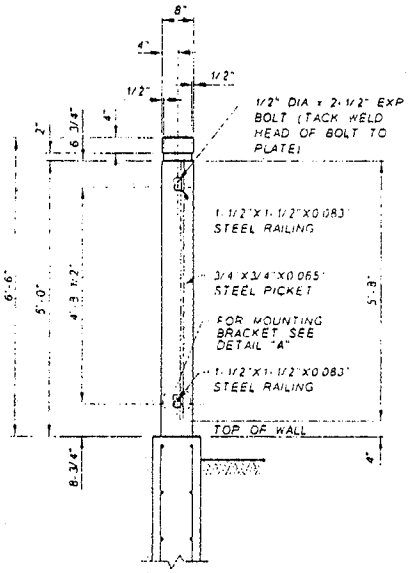

CONCRETE POST DETAIL
SCALE 3/4" = 1'-0"

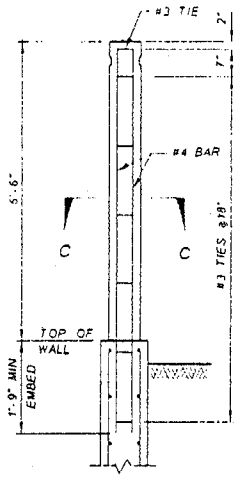

CONCRETE POST SECTION
SCALE 3/4" = 1'-0"

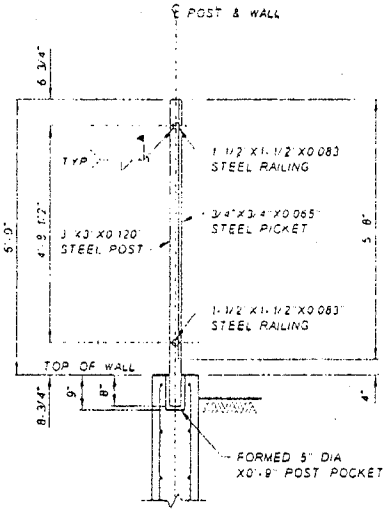

STEEL POST DETAIL
SCALE 3/4" = 1'-0"

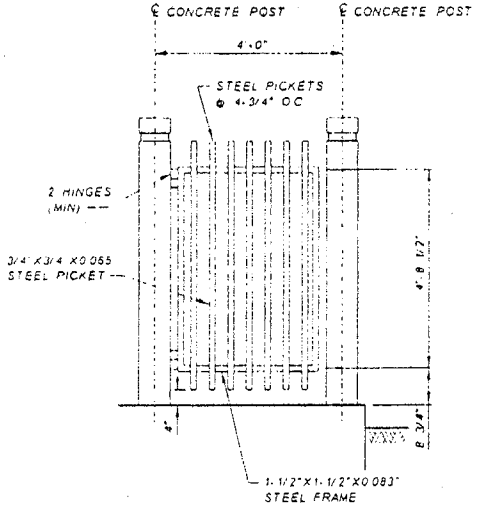

GATE DETAIL
SCALE 3/4" = 1'-0"

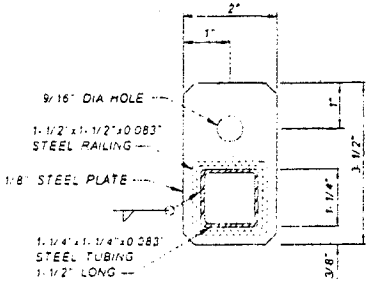

DETAIL "A"
NTS

NO.	REVISION	BY	DATE
3			
2			
1			

FLOOD CONTROL DISTRICT OF MARICOPA COUNTY
ENGINEERING DIVISION

MCDOWELL ROAD BASIN AND STORM DRAIN PROJECT
PCN 420.03.31

	BY	DATE
DESIGNED	SMN	10/04/06
DRAWN	MSK	10/04/06
CHECKED	KJK/DJL	10/04/06

Kimley-Horn and Associates, Inc.

DRAWING NO ST5 | STRUCTURE #13 | SHEET OF 51 74

23 AM 10/5/2006 kevin.kimm K:\WaterResources\011310121\CAD\011310121st10.dgn

Kimley-Horn and Associates, Inc.

Job McDowell Rd Subject Open Box Sheet No. ___ of ___
Job No. ___
Designed by JSS Date 3/21/06 Checked by ___ Date ___

GEOMETRY

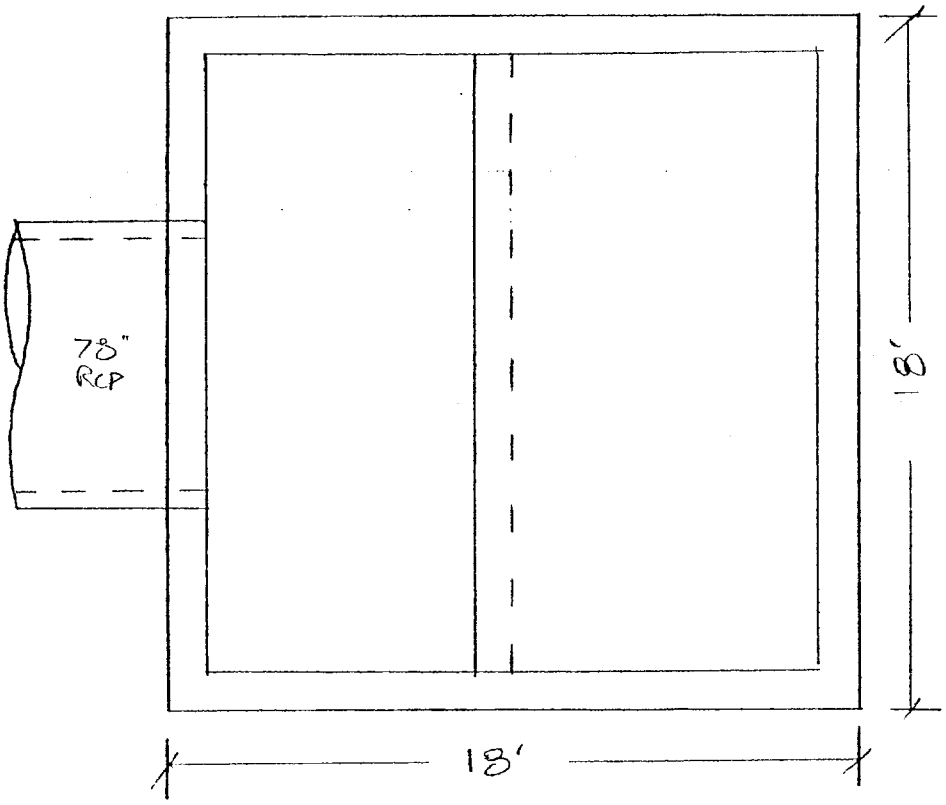

NOTE: BOX DEPTH REDUCED BY APPROXIMATELY 3'
∴ DESIGN IS CONSERVATIVE
KJK 4/11/06

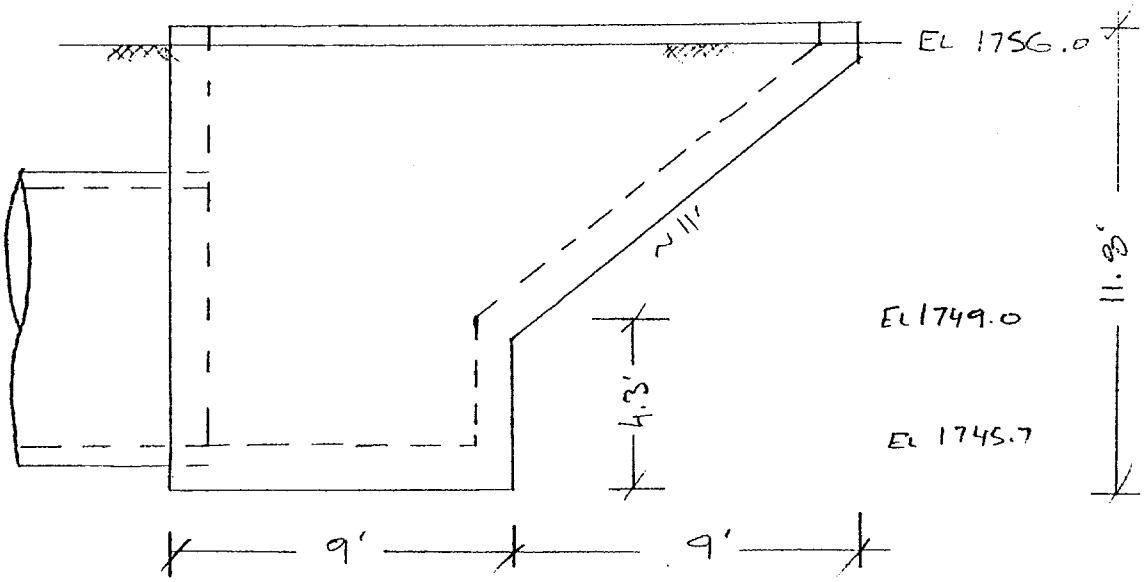

Kimley-Horn and Associates, Inc.

Job McDowell Rd Subject Open Box Sheet No. ____ of ____
Job No. ____
Designed by JSS Date 3/21/06 Checked by ____ Date ____

Wall Loads

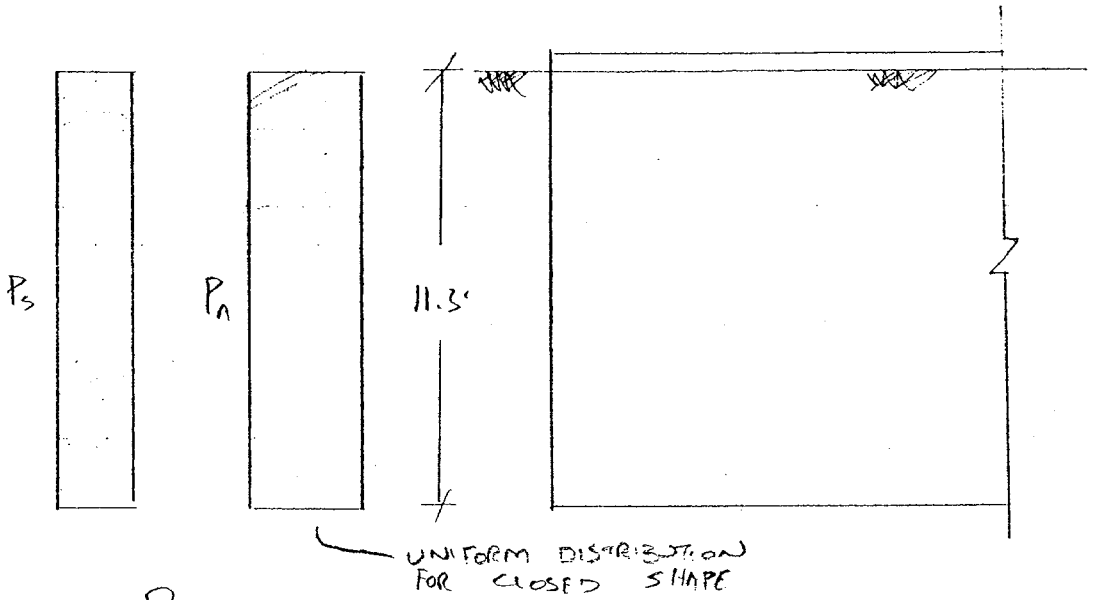

$P_s = 120$ PSF

$P_n = 20H$ PSF $= (20)(11.3') = 226$ PSF

$P_{TOTAL} = 120\text{ PSF}(1') + 226\text{ PSF}(1') = 346$ PLF

Bottom Slab Loads

- WALL LOADS ONLY APPLY
- TOTAL DEAD WT. $= (1')(18')(11.8')(150\text{ PCF}) = 31.9$ KIPS
  $+ (2)(1')(140\text{ SF})(150\text{ PCF}) = 42.0$ KIPS
  $+ (1')(11')(18')(150\text{ PCF}) = 29.7$ KIPS
  $+ (1')(4.3')(18')(150\text{ PCF}) = 11.6$ KIPS
  115.2 KIPS

$DL = 115.2\text{ KIPS} / 9' \times 18' = 711$ PSF

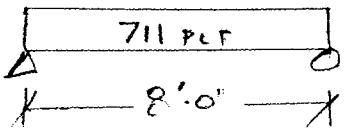

Concrete Box Member Design Forces: STRUCTURE 13

Wall Information (Assumes design as a cantilevered retaining wall):

Wall Height: $h_{wall} := 9.5 \cdot ft$

Lateral Soil Pressure:

Soil angle of internal friction: $\phi := 30 \cdot deg$ FROM WHERE?

Unit weight of soil: $\gamma := 125 \cdot pcf$

Bottom Slab Information (Assumes design a one-way simple span):

Design of bottom slab based on soil pressure. Soil pressure calculated assuming all loads are evenly distributed over the area of the bottom slab.

Design Bottom Slab Span: $l_{bslab} := 9 \cdot ft$

Design Bottom Slab Thickness: $t_{bslab} := 15 \cdot in$

Area of Bottom Slab $area_{bslab} := 144 \cdot ft^2$ (8' x 18')

Perimeter of Box Structure: $perim := 72 \cdot ft$ (conservatively assume 18' x 18')

Design Wall Thickness: $t_{wall} := 12 \cdot in$

Design Wall Height: $h_{wall} := 9.5 \cdot ft$

Load from Wall Selfweight:

$$P_{wall} := t_{wall} \cdot 150 \cdot pcf \cdot perim \cdot h_{wall}$$

Ignore Bottom Slab Selfweight since it will cancel itself out in the design

Total Load for soil pressure calculations:

$$P_{total} := P_{wall} \qquad P_{total} = 102.6\,kip$$

Soil Pressure for Design of Bottom Slab:

$$soilpres := \frac{P_{total}}{area_{bslab}} \qquad soilpres = 0.712\,ksf$$

Positive Moment at Midspan of Bottom Slab:

$$M := \frac{soilpres \cdot 1\,ft \cdot l_{bslab}^2}{8} \qquad M = 7.214\,kft$$

$$M_u := 1.3M \qquad M_u = 9.378\,kft$$

Shear at End of wall:

$$V := \frac{soilpres \cdot 1\,ft \cdot l_{bslab}}{2} \qquad V = 3.206\,kip$$

$$V_u := 1.3V \qquad V_u = 4.168\,kip$$

AASHTO REINFORCED CONCRETE BEAM DESIGN (LFD)

ENGLISH UNITS

REFERENCE: AASHTO 17th edition, 2002

Revision #	Revised By	Date	Checked By	Date	Description of Revision
1	BZS	12/29/04	DAC	12/29/04	Update of formatting

Kimley-Horn and Associates, Inc.

Job McDowell Road Subject Structure #13 Btm Slab M+ Project No. 091131012

Designed by KJK Date 03/30/06 Checked by _____ Date _____

AASHTO 17th Edition LFD R/C Beam Design

REFERENCE: AASHTO 17th Edition, 2002

Note: Input parameters are in yellow highlight. Checks for adequacy are in blue highlight with border

Base Units: ft = 1L lb = 1M sec = 1T K = 1K lbf = force

Define Units: kips := 1000·lbf degF := 1·K ksi := 1000psi

DESIGN LOCATION: BTM SLAB M

MATERIAL PROPERTIES:

CONCRETE :

$F'c := 3\cdot ksi$ Concrete compressive strength

$z := 130\frac{kips}{in}$ Quantity limiting distribution of flexural reinf. [AASHTO 8.16.8.4]

$W_c := .15\cdot\frac{kips}{ft^3}$ [UNIT FORCE -- AASHTO 3.3.6]

REINFORCING STEEL :

$f_y := 60.0\cdot ksi$ [Grade 60]

$f_s := 24.0\cdot ksi$ [AASHTO 8.15.2.2 SERVICE LOAD]

$E_s := 29000ksi$ [AASHTO 8.7.2]

$\phi_m := .90$ Flexure - strength reduction factor [AASHTO 8.16.1.2.2]

$\phi_s := .85$ Shear - strength reduction factor [AASHTO 8.16.1.2.2]

CALCULATED MATERIAL PROPERTIES:

$fc := .4\cdot F'c$ $fc = 1.2ksi$ [SERVICE LOAD]

$E_c := W_c^{1.5}\cdot 33\cdot\sqrt{F'c}\cdot\left(\frac{ft^3}{lbf}\right)^{1.5}\cdot\sqrt{psi}$ $E_c = 3320.56\,ksi$ Elastic Modulus for concrete [AASHTO 8.7.1]

$n := floor\left(\frac{E_s}{E_c}\right) + if\left[.5 > \left(\frac{E_s}{E_c}\right) - floor\left(\frac{E_s}{E_c}\right), 0, 1\right]$ $n = 9$ Modular Ratio [AASHTO 8.15.3.4]

$\beta_1 := if\left[F'c \le 4.\cdot ksi, .85, .85 - (F'c - 4\cdot ksi)\cdot .05\cdot\frac{1}{ksi}\right]$ $\beta_1 = 0.85$ FOR $F'c < 4ksi$ $\beta_1 = .85$ [AASHTO 8.16.2.7]

DESIGN LOADS:

LOAD FACTOR	SERVICE LOAD	
$Mu := 10 \cdot kips \cdot ft$	$M_{max} := 8 \cdot kips \cdot ft$	Use service load to check serviceabilty requirements
$Vu := 5 \cdot kips$	$M_{min} := 8 \cdot kips \cdot ft$	

GEOMETRY:

$b := 1 \cdot ft$ Width of compression flange $depth := 1.25 \cdot ft$ Gross depth of section

REINFORCING STEEL:

$cover := 3 \cdot in$ Clear cover to stirrups [AASHTO 8.22.1]

Use # $bar := 6$ --- **Moment reinforcement**

$AsNo := 1$ Total number of bars used Total Area of Reinforcing steel

$A_{bar} = 0.44\ in^2$ Bar area $As\_a := AsNo \cdot A_{bar}$

$diam_{bar} = 0.75\ in$ Bar dia. $As\_a = 0.44\ in^2$ Total area of flexure reinforcing

Use # $bar_s := 0$ --- **Shear reinforcement**

$AsNo_s := 0$ Total number of legs used Total Area of Reinforcing steel

$A_{bar_s} = 0\ in^2$ Bar area $As\_a_s := AsNo_s \cdot A_{bar_s}$

$diam_{bar_s} = 0\ in$ Bar dia. $As\_a_s = 0\ in^2$ Total area of shear reinforcing

Calc. the dc & d to tension reinf.:

$dc := cover + diam_{bar_s} + \frac{diam_{bar}}{2}$ $dc = 3.38\ in$ Distance from the tension face to centroid of first layer of tension reinf.

$d := depth - dc$ $\boxed{d = 11.62\ in}$ Distance from compression face to centroid of tension reinf.

ULTIMATE MOMENT CAPACITY: [AASHTO 8.16.3.1]

$a := As\_a \cdot \frac{f_y}{.85 \cdot F'c \cdot b}$ $a = 0.86\ in$

$\phi Mn := \phi_m \cdot \left[As\_a \cdot f_y \cdot \left(d - \frac{a}{2} \right) \right]$ $\boxed{\phi Mn = 22.16\ kips \cdot ft}$ > $\boxed{Mu = 10.00\ kips \cdot ft}$

MAX. FLEXURE REINF. [AASHTO 8.16.3.1.1]

$$\rho_{bal} := \frac{0.85 \cdot \beta_1 \cdot F'c}{f_y} \cdot \frac{87000 \cdot psi}{87000 \cdot psi + f_y} \qquad \rho_{bal} = 0.02138$$

$$\rho := \frac{As\_a}{b \cdot d} \qquad \rho = 0.00315$$

$.75 \cdot \rho_{bal} = 0.01604$ > $\rho = 0.00315$

MIN. FLEXURE REINF. [AASHTO 8.17.1.1]

$$Mc := \frac{b \cdot depth^2}{6} \cdot 7.5 \cdot \sqrt{psi} \cdot \sqrt{F'c} \qquad Mc = 15.4\,kips \cdot ft$$

CRACKING MOMENT on the basis of the modulus of rupture for normal weight concrete [AASHTO 8.15.2.1.1]

$\phi Mn = 22.16\,kips \cdot ft$ > $1.2 \cdot Mc = 18.49\,kips \cdot ft$

OR

[AASHTO 8.17.1.2] $\phi Mn = 22.16\,kips \cdot ft$ > $1.33Mu = 13.3\,kips \cdot ft$

SERVICEABILITY REQUIREMENTS [AASHTO 8.16.8] - Use as general Check

$$k := \sqrt{2 \cdot n \cdot \rho + (n \cdot \rho)^2} - n \cdot \rho \qquad j := 1 - \frac{k}{3}, \qquad k = 0.2116$$

$$j = 0.9295$$

$$fs_{max} := \frac{M_{max}}{As\_a \cdot j \cdot d} \qquad fs_{min} := \frac{M_{min}}{As\_a \cdot j \cdot d} \qquad fc_{max} := fs_{max} \cdot \frac{k}{n \cdot (1 - k)}$$

$fs_{max} = 20.19\,ksi$ < $f_s = 24\,ksi$

$fs_{min} = 20.19\,ksi$

$fc_{max} = 0.6\,ksi$ < $fc = 1.2\,ksi$

FATIGUE STRESS LIMITS [AASHTO 8.16.8.3]

$rh := .3$ (r/h) of .3 is used as a default

$f_f := 21.\cdot ksi - 0.33 \cdot fs_{min} + 8.\cdot ksi \cdot rh$ $\qquad f_f = 16.74\,ksi$ > $(fs_{max} - fs_{min}) = 0\,ksi$

Max. stress range for reinf. steel

DISTRIBUTION OF FLEXURAL REINFORCEMENT [AASHTO 8.16.8.4]

$dc := if[cover > 2 \cdot in, dc - (cover - 2 \cdot in), dc]$ $\qquad dc = 2.38\,in$ $\qquad$ Use max. cover as 2"

$$A := \frac{2 \cdot dc \cdot b}{AsNo} \qquad A = 57\,in^2 \qquad f_{s\_z} := \frac{z}{(dc \cdot A)^{\frac{1}{3}}} \qquad f_{s\_z} = 25.32\,ksi$$

Effective tension area of conc. surrounding 1 bar
-- formula for 1 layer of steel

$f_{s\_df} := if(f_{s\_z} \le .6 \cdot f_y, f_{s\_z}, .6 \cdot f_y)$ $\qquad f_{s\_df} = 25.32\,ksi$ > $fs_{max} = 20.19\,ksi$

SHEAR STRENGTH [AASHTO 8.16.6.1.1]

$Vu_{reqd} := \frac{Vu}{\phi_s}$ $\boxed{Vu_{reqd} = 5.88\,kips}$

Shear Strength Provided by Concrete [AASHTO 8.16.6.2.1] (Assumes a rect. section)

$factor := \frac{Vu \cdot d}{Mu}$ $factor = 0.48$ $factor := if(factor > 1., 1., factor)$ $factor = 0.48$

$Fv_c := \begin{bmatrix} (1.9 \cdot \sqrt{psi} \cdot \sqrt{F'c} + 2500 \cdot psi \cdot \rho \cdot factor) \\ 2 \cdot \sqrt{psi} \cdot \sqrt{F'c} \end{bmatrix}$ $Fv_c = \begin{pmatrix} 107.89 \\ 109.54 \end{pmatrix} psi$

$Fvmax := 3.5 \cdot (\sqrt{psi} \cdot \sqrt{F'c})$ $Fvmax = 191.7\,psi$

$Fvc := if(max(Fv_c) < Fvmax, max(Fv_c), Fvmax)$ $Fvc = 109.54\,psi$ concrete shear strength

$Vc := Fvc \cdot b \cdot d$ $\boxed{Vc = 15.28\,kips}$ shear carried by concrete

IF $\boxed{Vc = 15.28\,kips}$ > $\boxed{Vu_{reqd} = 5.88\,kips}$ $\boxed{\text{No Shear reinf. required [AASHTO 8.19.1]}}$

If Shear Reinforcing is required [AASHTO 8.16.6.3]

$Vs_{reqd} := if(Vu_{reqd} - Vc < 0.\cdot kips, 0.000001 \cdot kips, Vu_{reqd} - Vc)$ $\boxed{Vs_{reqd} = 0\,kips}$

Max. shear reinf. spacing [AASHTO 8.19.1.2], AASHTO 8.19.3]

$smax := \begin{pmatrix} \frac{As\_a_s \cdot f_y}{50 \cdot psi \cdot b} \\ 24 \cdot in \\ \frac{d}{2} \end{pmatrix}$ $smax = \begin{pmatrix} 0 \\ 24 \\ 5.81 \end{pmatrix} in$ $smax := min(smax)$ $\boxed{smax = 0\,in}$

max stirrup spacing

Reduction for max spacing for high shear reinf. requirement: [AASHTO 8.16.6.3.8]

IF $\boxed{Vs_{reqd} = 0\,kips}$ > $\boxed{4 \cdot \sqrt{psi} \cdot \sqrt{F'c} \cdot b \cdot d = 30.56\,kips}$ Then reduce max. spacing by 1/2

$s_{max} := if(Vs_{reqd} > 4 \cdot \sqrt{psi} \cdot \sqrt{F'c} \cdot b \cdot d, .5 \cdot smax, smax)$ $\boxed{s_{max} = 0\,in}$

Max steel shear strength allowed: [AASHTO 8.16.6.3.9]

$\boxed{Vs_{reqd} = 0\,kips}$ < $\boxed{8 \cdot \sqrt{psi} \cdot \sqrt{F'c} \cdot b \cdot d = 61.13\,kips}$

Stirrup Spacing: [AASHTO 8.16.6.3]

$s := \frac{As\_a_s \cdot f_y \cdot d}{Vs_{reqd}}$ $s = 0\,in$

$s_{reqd} := if(s > s_{max}, s_{max}, s)$ Max. Stirrup spacing: $\boxed{s_{reqd} = 0\,in}$

CHECK CRACK CONTROL -- [AASHTO 17.6.4.7]

$d = 11.62\,in$ Distance from compression face to centroid of tension reinf.

$d_c := cover + 0.5 \cdot diam_{bar}$ Thickness of cover from tension fiber to center of tension reinf.

$\beta := 1 + \frac{d_c}{.7 \cdot (d)}$ $\beta = 1.41$ $A = 57\,in^2$ Effective tension area of conc. surrounding 1 bar. (1 layer of steel)

$f_s := \frac{155}{\beta \cdot \sqrt[3]{d_c \cdot A}} \cdot \frac{kip}{in}$ $fs_{ck} := if(f_s \le .6 \cdot f_y, f_s, .6 \cdot f_y)$

$f_s = 18.98\,ksi$ $fs_{ck} = 18.98\,ksi$ $\boxed{\frac{fs_{ck}}{fs_{max}} = 0.94}$ > $\boxed{1.0}$

N.G.

Kimley-Horn and Assocaites, Inc.
7878 N. 16th Street
Suite 300
Phoenix, AZ 85020

Title: Wall Design - Structure 13 | Page: _____
Job #: 091131012 | Dsgnr: KJK | Date: MAR 30,2006
Description: ...
Since open box design walls as cantilevered retaining

This Wall in File: K:\Rdwy\Structural\McDowell Road\Desig

Retain Pro 2005 , 1-December-2005 (c) 1989-2005
www.retainpro.com/support for latest release
Registration # : RP-1146815 2005003

Cantilevered Retaining Wall Design

Code: AASHTO

Criteria

Retained Height	=	9.00 ft
Wall height above soil	=	0.50 ft
Slope Behind Wall	=	0.00 : 1
Height of Soil over Toe	=	0.00 in
Wind on Stem	=	0.0 psf

Vertical component of active lateral soil pressure options:
USED for Soil Pressure.
NOT USED for Sliding Resistance.
NOT USED for Overturning Resistance.

Soil Data

Allow Soil Bearing	=	2,000.0 psf
Rankine Soil Presure calculation		
Soil Friction Angle	=	34.0 deg
Active Pressure Ka*Gamma=		33.9 psf/ft
Passive Pressure Kp*Gamma		424.5 psf/ft
Soil Density	=	120.00 pcf
Footing||Soil Friction	=	0.300 0.35
Soil height to ignore for passive pressure	=	0.00 in

Footing Dimensions & Strengths

Toe Width	=	4.25 ft
Heel Width	=	1.00
Total Footing Width	=	5.25
Footing Thickness	=	15.00 in
Key Width	=	0.00 in
Key Depth	=	0.00 in
Key Distance from Toe	=	0.00 ft

f'c = 3,000 psi Fy = 60,000 psi
Footing Concrete Density = 150.00 pcf
Min. As % = 0.0018
Cover @ Top = 2.00 in @ Btm. = 3.00 in

Surcharge Loads

Surcharge Over Heel = 120.0 psf
NOT Used To Resist Sliding & Overturning
Surcharge Over Toe = 0.0 psf
NOT Used for Sliding & Overturning

Axial Load Applied to Stem

Axial Dead Load	=	0.0 lbs
Axial Live Load	=	0.0 lbs
Axial Load Eccentricity	=	0.0 in

Lateral Load Applied to Stem

Lateral Load	=	0.0 #/ft
...Height to Top	=	0.00 ft
...Height to Bottom	=	0.00 ft

Adjacent Footing Load

Adjacent Footing Load	=	0.0 lbs
Footing Width	=	0.00 ft
Eccentricity	=	0.00 in
Wall to Ftg CL Dist	=	0.00 ft
Footing Type		Line Load
Base Above/Below Soil at Back of Wall	=	0.0 ft
Poisson's Ratio	=	0.300

*Design Summary

Wall Stability Ratios

Overturning = 1.19 Ratio < 1.5!
Slab Resists All Sliding ! OK

Total Bearing Load	=	2,954 lbs
...resultant ecc.	=	13.82 in
Soil Pressure @ Toe	=	1,337 psf OK
Soil Pressure @ Heel	=	0 psf OK
Allowable	=	2,000 psf

Soil Pressure Less Than Allowable

ACI Factored @ Toe	=	1,417 psf
ACI Factored @ Heel	=	0 psf
Footing Shear @ Toe	=	15.4 psi OK
Footing Shear @ Heel	=	0.0 psi OK
Allowable	=	93.1 psi

Sliding Calcs Slab Resists All Sliding !

Lateral Sliding Force	=	2,103.4 lbs
less 100% Passive Force	= -	331.6 lbs
less 100% Friction Force	= -	722.8 lbs
Added Force Req'd	=	1,049.0 lbs NG OK
....for 1.5 : 1 Stability	=	2,100.7 lbs NG

Load Factors

Building Code	AASHTO
Dead Load	1.300
Live Load	2.170
Earth, H	1.690
Wind, W	1.300
Seismic, E	1.000

Stem Construction

Top Stem

Stem OK

Design Height Above Ftg	ft =	0.00
Wall Material Above "Ht"	=	Concrete
Thickness	=	12.00
Rebar Size	=	# 6
Rebar Spacing	=	12.00
Rebar Placed at	=	Edge

Design Data

fb/FB + fa/Fa	=	0.510
Total Force @ Section	lbs =	2,838.1
Moment....Actual	ft-# =	9,288.2
Moment....Allowable	=	18,200.8
Shear.....Actual	psi =	24.6
Shear.....Allowable	psi =	82.2
Wall Weight	=	150.0
Rebar Depth 'd'	in =	9.63
LAP SPLICE IF ABOVE	in =	25.63
LAP SPLICE IF BELOW	in =	
HOOK EMBED INTO FTG	in =	6.00

Masonry Data

f'm	psi =	
Fs	psi =	
Solid Grouting	=	
Special Inspection	=	
Modular Ratio 'n'	=	
Short Term Factor	=	
Equiv. Solid Thick.	=	

Masonry Block Type = Medium Weight

Concrete Data

f'c	psi =	3,000.0
Fy	psi =	60,000.0

Kimley-Horn and Assocaites, Inc.
7878 N. 16th Street
Suite 300
Phoenix, AZ 85020

Title : Wall Design - Structure 13 Page: _____
Job # : 091131012 Dsgnr: KJK Date: MAR 30,2006
Description....
Since open box design walls as cantilevered retaining

This Wall in File: K:\Rdwy\Structural\McDowell Road\Desig

etain Pro 2005 , 1-December-2005, (c) 1989-2005
www.retainpro.com/support for latest release
Registration # : RP-1146815 2005003

Cantilevered Retaining Wall Design

Code: AASHTO

Footing Design Results

		Toe	Heel
Factored Pressure	=	1,417	0 psf
Mu' : Upward	=	8,697	0 ft-#
Mu' : Downward	=	2,201	0 ft-#
Mu : Design	=	6,495	0 ft-#
Actual 1-Way Shear	=	15.40	0.00 psi
Allow 1-Way Shear	=	93.11	0.00 psi
Toe Reinforcing	=	# 6 @ 12.00 in	
Heel Reinforcing	=	# 6 @ 12.00 in	
Key Reinforcing	=	None Spec'd	

Other Acceptable Sizes & Spacings

Toe: #4@ 9.75 in, #5@ 15.00 in, #6@ 21.50 in, #7@ 29.00 in, #8@ 38.25 in, #9@ 48
Heel: Not req'd, Mu < S * Fr
Key: No key defined

Summary of Overturning & Resisting Forces & Moments

Item		.....OVERTURNING..... Force lbs	Distance ft	Moment ft-#
Heel Active Pressure	=	2,129.9	3.70	7,871.2
Toe Active Pressure	=	-26.5	0.42	-11.0
Surcharge Over Toe	=			
Adjacent Footing Load	=			
Added Lateral Load	=			
Load @ Stem Above Soil	=			
Total	=	2,103.4	O.T.M. =	7,860.2

		.....RESISTING..... Force lbs	Distance ft	Moment ft-#
Soil Over Heel	=		5.25	
Sloped Soil Over Heel	=			
Surcharge Over Heel	=			
Adjacent Footing Load	=			
Axial Dead Load on Stem	=		0.00	
Soil Over Toe	=			
Surcharge Over Toe	=			
Stem Weight(s)	=	1,425.0	4.75	6,768.8
Earth @ Stem Transitions	=			
Footing Weight	=	984.4	2.63	2,584.0
Key Weight	=			
Vert. Component	=			
Total	=	2,409.4 lbs	R.M.=	9,352.7

Resisting/Overturning Ratio = **1.19**

Vertical Loads used for Soil Pressure = 2,954.2 lbs

Vertical component of active pressure used for soil pressure

DESIGNER NOTES:

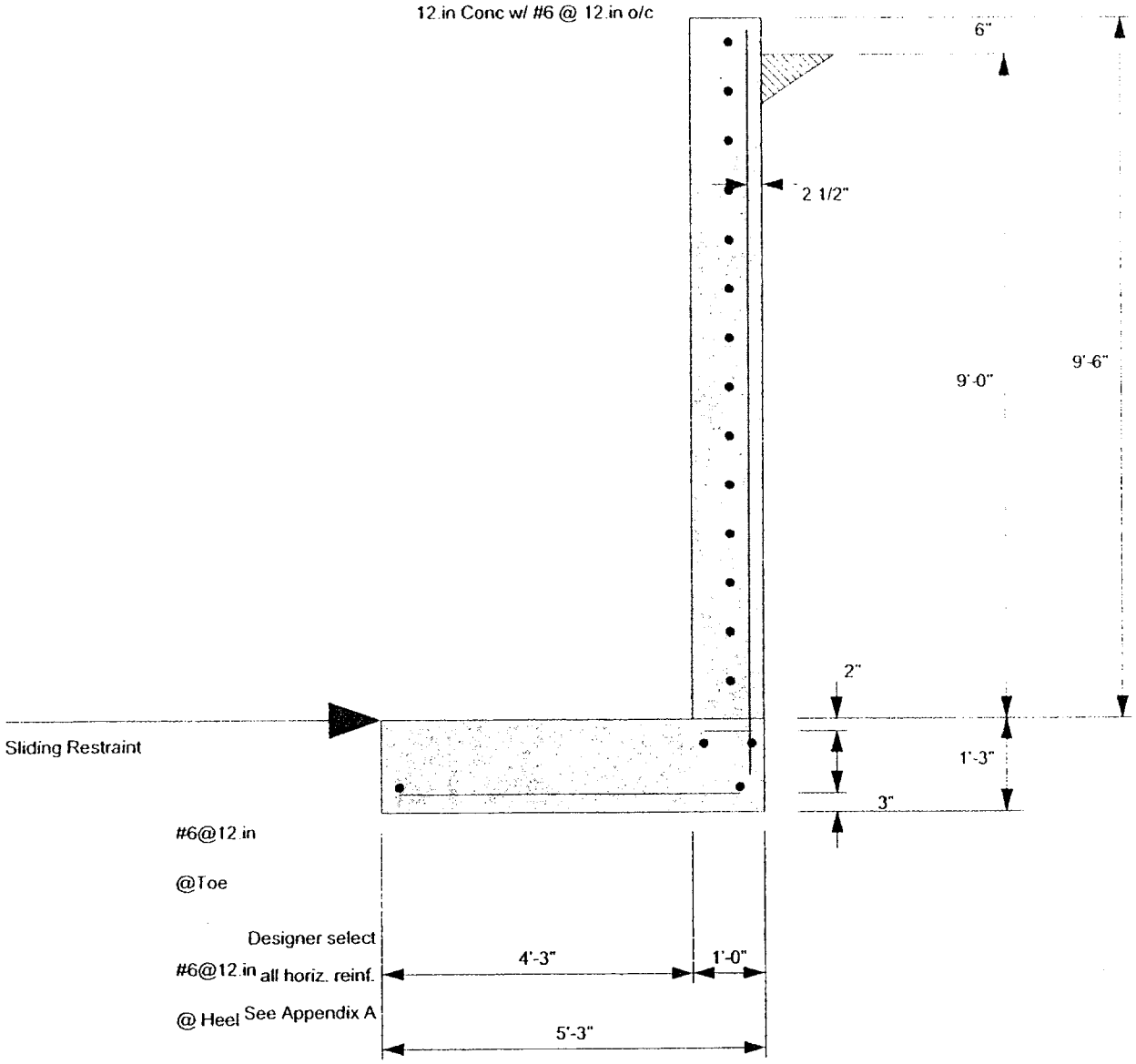
12 in Conc w/ #6 @ 12 in o/c
6"
2 1/2"
9'-6"
9'-0"
2"
1'-3"
3"
Sliding Restraint
#6@12 in
@Toe
Designer select
#6@12 in all horiz. reinf.
@ Heel See Appendix A
4'-3"
1'-0"
5'-3"

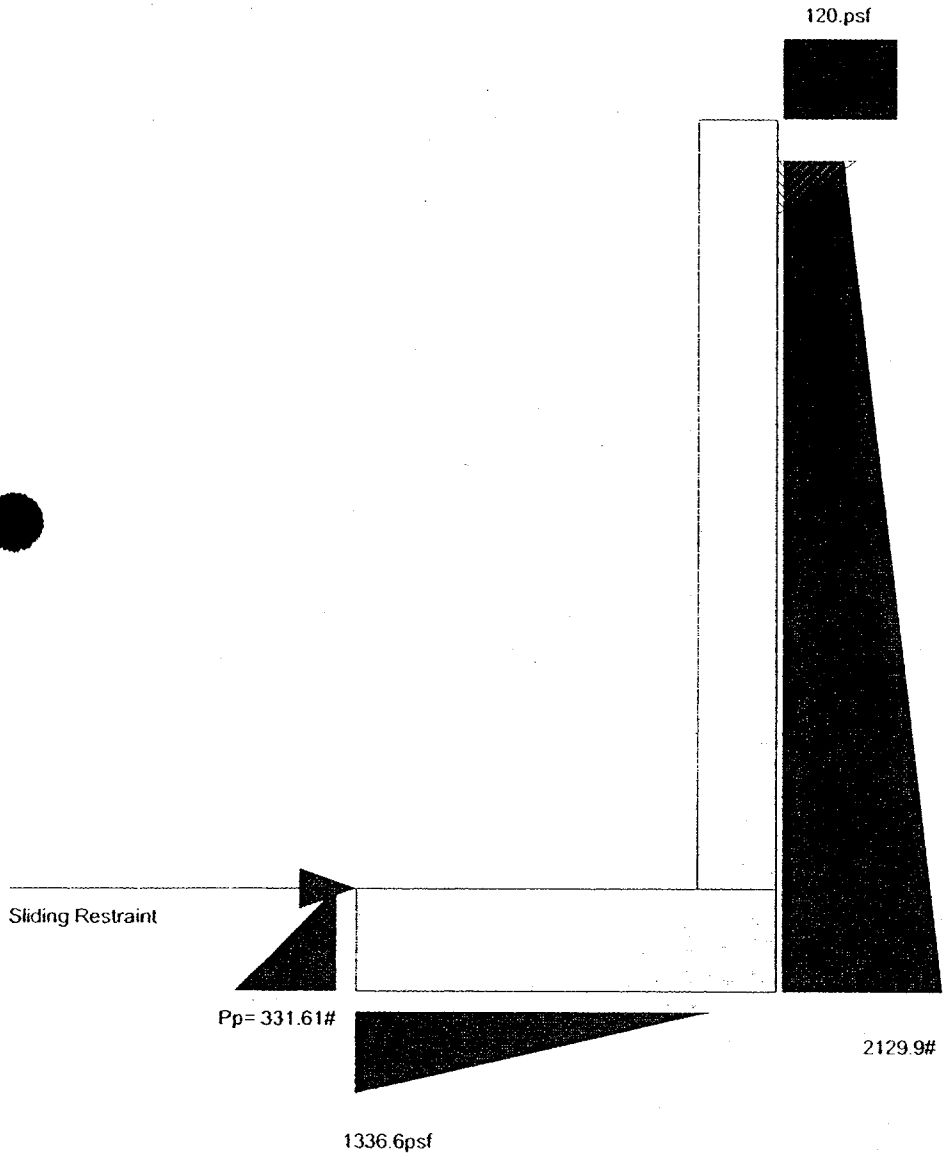
120.psf
Sliding Restraint
Pp= 331.61#
2129.9#
1336.6psf

RCP D-LOAD CALCULATIONS

D-LOAD CALCULATIONS
RCP IN SRP EASEMENT

McDowell Road Basin and Storm Drain Project

Prepared By:
Kimley-Horn and Associates, Inc.
7878 N. 16th Street
Suite 300
Phoenix, AZ 85020

Date: September 26, 2006

Registered Professional Engineer (Civil)
CERTIFICATE NO.
43306
KEVIN
KIMM
Date Signed 9-26-06
ARIZONA, U.S.A.

Kimley-Horn
and Associates, Inc.

Design Specification:

1. Standard Specifications for Highway Bridges, 17th Edition – 2002.

TABLE OF CONTENTS

Page No.

48" RCP

Design Calculations 1

Dual 54" RCP

Design Calculations 4

Triple 42" RCP

Design Calculations 7

DESIGN CRITERIA:

Specifications:

1. AASHTO "Standard Specifications For Highway Bridges", 17th Edition, 2002.

Constants:

$plf \equiv \frac{lbf}{ft}$ $psf \equiv \frac{lbf}{ft^2}$ $pcf \equiv \frac{lbf}{ft^3}$ $psi \equiv \frac{lbf}{in^2}$

$sy \equiv yd^2$ $cy \equiv yd^3$ $sf \equiv ft^2$

$kip \equiv 1000 \cdot lbf$ $klf \equiv \frac{kip}{ft}$ $ksf \equiv \frac{kip}{ft^2}$ $ksi \equiv \frac{kip}{in^2}$

$kft \equiv kip \cdot ft$ $kin \equiv kip \cdot in$

Unit Weights:

Concrete: $w_c \equiv 150 \cdot pcf$

Steel: $w_s \equiv 490 \cdot pcf$

Earth: $w_e \equiv 120 \cdot pcf$

Water: $w_w \equiv 62.4 \cdot pcf$

GENERAL DESIGN INFORMATION:

Pipe Outside Diameter:	$Pipe_{OD} := 59.5in$	Assumes Wall C RCP
Pipe Inside Diameter:	$Pipe_{ID} := 48in$	$S_i := Pipe_{ID}$
Depth of Earth Cover:	$H := 3.5ft$	
Unit Weight of Earth:	$\gamma_{soil} := 140pcf$	$w := \gamma_{soil}$
Type of Installation:	Trench	

EARTH LOADS:

Loads (AASHTO 16.4.4.2):

Earth Load - AASHTO 16.4.4.2.1.1 (W_E)

$$W_E := F_e \cdot w \cdot B_c \cdot H$$

$F_e := 1.40$ Per Figure 16.4A - assumes Installation Type 3

$w = 140\ pcf$

$B_c := Pipe_{OD}$ Out-to-out horizontal span of pipe

$H = 3.5\ ft$

$W_E := F_e \cdot w \cdot B_c \cdot H$ $W_E = 3401.42\ plf$

Fluid Load - AASHTO 16.4.4.2.2 (W_f)

$$W_f := w_w \cdot \left(\frac{\pi \cdot S_i^2}{4}\right)$$ $W_f = 784.14\ plf$

Live Load - AASHTO 16.4.4.2.3 (WL)

Outrigger Pressure at Top of Soil ($Pres_{top}$) $Pres_{top} := 320psi$

Outrigger Diameter (Dia_{outr}) $Dia_{outr} := 27in$

Outrigger Area (A_{outr}) $A_{outr} := \frac{\pi \cdot Dia_{outr}^2}{4}$ $A_{outr} = 3.98\ ft^2$

Outrigger Diameter at Top of Pipe (Dia_{tpipe}) $Dia_{tpipe} := Dia_{outr} + 1.75 \cdot H$ $Dia_{tpipe} = 100.5\,in$

Outrigger Area at Top of Pipe (A_{tpipe}) $A_{tpipe} := \frac{\pi \cdot Dia_{tpipe}^2}{4}$ $A_{tpipe} = 55.09\ ft^2$

Outrigger Pressure at Top of Pipe ($Pres_{tpipe}$) $Pres_{tpipe} := \frac{Pres_{top} \cdot A_{outr}}{A_{tpipe}}$ $Pres_{tpipe} = 3325.89\,psf$

$W_L := Pres_{tpipe} \cdot B_c$ $W_L = 16490.87\,plf$

Indirect Design Method Based on Pipe Strength and Load-Carrying Capacity (AASHTO 16.4.4.2):

Loads - AASHTO 16.4.5.1 (D)

D-load of the pipe (D) $D := \left(\frac{1}{S_i}\right) \cdot \left(\frac{W_E + W_f}{B_{fe}} + \frac{W_L}{B_{fLL}}\right)$

Earth Load Bedding Factor (B_{fe}) $B_{fe} := 2.2$ Per Table 16.4E - assumes Installation Type 3

Live Load Bedding Factor (B_{fLL}) $B_{fLL} := 2.2$ Per Table 16.4F - assumes Fill Height = 3.5 ft

$$D := \left(\frac{1}{S_i}\right) \cdot \left(\frac{W_E + W_f}{B_{fe}} + \frac{W_L}{B_{fLL}}\right) \qquad D = 2349.59\,psf$$

Therefore, specify **Class V** RCP per ASTM C 76 and provide a minimum of 3.5 ft of cover.

DESIGN CRITERIA:

Specifications:

1. AASHTO "Standard Specifications For Highway Bridges", 17th Edition, 2002.

Constants:

$plf \equiv \frac{lbf}{ft}$ $psf \equiv \frac{lbf}{ft^2}$ $pcf \equiv \frac{lbf}{ft^3}$ $psi \equiv \frac{lbf}{in^2}$

$sy \equiv yd^2$ $cy \equiv yd^3$ $sf \equiv ft^2$

$kip \equiv 1000 \cdot lbf$ $klf \equiv \frac{kip}{ft}$ $ksf \equiv \frac{kip}{ft^2}$ $ksi \equiv \frac{kip}{in^2}$

$kft \equiv kip \cdot ft$ $kin \equiv kip \cdot in$

Unit Weights:

Concrete: $w_c \equiv 150 \cdot pcf$

Steel: $w_s \equiv 490 \cdot pcf$

Earth: $w_e \equiv 120 \cdot pcf$

Water: $w_w \equiv 62.4 \cdot pcf$

GENERAL DESIGN INFORMATION:

Pipe Outside Diameter:	$Pipe_{OD} := 66.5in$	Assumes Wall C RCP
Pipe Inside Diameter:	$Pipe_{ID} := 54in$	$S_i := Pipe_{ID}$
Depth of Earth Cover:	$H := 3.5ft$	
Unit Weight of Earth:	$\gamma_{soil} := 140pcf$	$w := \gamma_{soil}$
Type of Installation:	Trench	

EARTH LOADS:

Loads (AASHTO 16.4.4.2):

Earth Load - AASHTO 16.4.4.2.1.1 (W_E)

$$W_E := F_e \cdot w \cdot B_c \cdot H$$

$F_e := 1.40$ Per Figure 16.4A - assumes Installation Type 3

$w = 140\,pcf$

$B_c := Pipe_{OD}$ Out-to-out horizontal span of pipe

$H = 3.5\,ft$

$W_E := F_e \cdot w \cdot B_c \cdot H$ $W_E = 3801.58\,plf$

Fluid Load - AASHTO 16.4.4.2.2 (W_f)

$$W_f := w_w \cdot \left(\frac{\pi \cdot S_i^2}{4}\right)$$ $W_f = 992.43\,plf$

Live Load - AASHTO 16.4.4.2.3 (WL)

Outrigger Pressure at Top of Soil ($Pres_{top}$) $Pres_{top} := 320psi$

Outrigger Diameter (Dia_{outr}) $Dia_{outr} := 27in$

Outrigger Area (A_{outr}) $A_{outr} := \frac{\pi \cdot Dia_{outr}^2}{4}$ $A_{outr} = 3.98\ ft^2$

Outrigger Diameter at Top of Pipe (Dia_{tpipe}) $Dia_{tpipe} := Dia_{outr} + 1.75 \cdot H$ $Dia_{tpipe} = 100.5\,in$

Outrigger Area at Top of Pipe (A_{tpipe}) $A_{tpipe} := \frac{\pi \cdot Dia_{tpipe}^2}{4}$ $A_{tpipe} = 55.09\ ft^2$

Outrigger Pressure at Top of Pipe ($Pres_{tpipe}$) $Pres_{tpipe} := \frac{Pres_{top} \cdot A_{outr}}{A_{tpipe}}$ $Pres_{tpipe} = 3325.89\,psf$

$W_L := Pres_{tpipe} \cdot B_c$ $W_L = 18430.97\,plf$

Indirect Design Method Based on Pipe Strength and Load-Carrying Capacity (AASHTO 16.4.4.2):

Loads - AASHTO 16.4.5.1 (D)

D-load of the pipe (D) $D := \left(\frac{1}{S_i}\right) \cdot \left(\frac{W_E + W_f}{B_{fe}} + \frac{W_L}{B_{fLL}}\right)$

Earth Load Bedding Factor (B_{fe}) $B_{fe} := 2.2$ Per Table 16.4E - assumes Installation Type 3

Live Load Bedding Factor (B_{fLL}) $B_{fLL} := 2.2$ Per Table 16.4F - assumes Fill Height = 3.5 ft

$$D := \left(\frac{1}{S_i}\right) \cdot \left(\frac{W_E + W_f}{B_{fe}} + \frac{W_L}{B_{fLL}}\right) \qquad D = 2345.96\,psf$$

Therefore, specify **Class V** RCP per ASTM C 76 and provide a minimum of 3.5 ft of cover.

DESIGN CRITERIA:

Specifications:

1. AASHTO "Standard Specifications For Highway Bridges", 17th Edition, 2002.

Constants:

$plf \equiv \frac{lbf}{ft}$ $psf \equiv \frac{lbf}{ft^2}$ $pcf \equiv \frac{lbf}{ft^3}$ $psi \equiv \frac{lbf}{in^2}$

$sy \equiv yd^2$ $cy \equiv yd^3$ $sf \equiv ft^2$

$kip \equiv 1000 \cdot lbf$ $klf \equiv \frac{kip}{ft}$ $ksf \equiv \frac{kip}{ft^2}$ $ksi \equiv \frac{kip}{in^2}$

$kft \equiv kip \cdot ft$ $kin \equiv kip \cdot in$

Unit Weights:

Concrete: $w_c \equiv 150 \cdot pcf$

Steel: $w_s \equiv 490 \cdot pcf$

Earth: $w_e \equiv 120 \cdot pcf$

Water: $w_w \equiv 62.4 \cdot pcf$

GENERAL DESIGN INFORMATION:

Pipe Outside Diameter:	$Pipe_{OD} := 52.5in$	Assumes Wall C RCP
Pipe Inside Diameter:	$Pipe_{ID} := 42in$	$S_i := Pipe_{ID}$
Depth of Earth Cover:	$H := 9.5ft$	
Unit Weight of Earth:	$\gamma_{soil} := 140pcf$	$w := \gamma_{soil}$
Type of Installation:	Trench	

EARTH LOADS:

Loads (AASHTO 16.4.4.2):

Earth Load - AASHTO 16.4.4.2.1.1 (W_E)

$$W_E := F_e \cdot w \cdot B_c \cdot H$$

$F_e := 1.40$ Per Figure 16.4A - assumes Installation Type 3

$w = 140\,pcf$

$B_c := Pipe_{OD}$ Out-to-out horizontal span of pipe

$H = 9.5\,ft$

$W_E := F_e \cdot w \cdot B_c \cdot H$ $W_E = 8146.25\,plf$

Fluid Load - AASHTO 16.4.4.2.2 (W_f)

$$W_f := w_w \cdot \left(\frac{\pi \cdot S_i^2}{4}\right)$$ $W_f = 600.36\,plf$

Live Load - AASHTO 16.4.4.2.3 (WL)

Outrigger Pressure at Top of Soil ($Pres_{top}$) $Pres_{top} := 320psi$

Outrigger Diameter (Dia_{outr}) $Dia_{outr} := 27in$

Outrigger Area (A_{outr}) $A_{outr} := \frac{\pi \cdot Dia_{outr}^2}{4}$ $A_{outr} = 3.98\ ft^2$

Outrigger Diameter at Top of Pipe (Dia_{tpipe}) $Dia_{tpipe} := Dia_{outr} + 1.75 \cdot H$ $Dia_{tpipe} = 226.5\,in$

Outrigger Area at Top of Pipe (A_{tpipe}) $A_{tpipe} := \frac{\pi \cdot Dia_{tpipe}^2}{4}$ $A_{tpipe} = 279.81\ ft^2$

Outrigger Pressure at Top of Pipe ($Pres_{tpipe}$) $Pres_{tpipe} := \frac{Pres_{top} \cdot A_{outr}}{A_{tpipe}}$ $Pres_{tpipe} = 654.79\,psf$

$W_L := Pres_{tpipe} \cdot B_c$ $W_L = 2864.72\,plf$

Indirect Design Method Based on Pipe Strength and Load-Carrying Capacity (AASHTO 16.4.4.2):

Loads - AASHTO 16.4.5.1 (D)

D-load of the pipe (D) $D := \left(\frac{1}{S_i}\right) \cdot \left(\frac{W_E + W_f}{B_{fe}} + \frac{W_L}{B_{fLL}}\right)$

Earth Load Bedding Factor (B_{fe}) $B_{fe} := 2.2$ Per Table 16.4E - assumes Installation Type 3

Live Load Bedding Factor (B_{fLL}) $B_{fLL} := 2.2$ Per Table 16.4F - assumes Fill Height = 9.5 ft

$D := \left(\frac{1}{S_i}\right) \cdot \left(\frac{W_E + W_f}{B_{fe}} + \frac{W_L}{B_{fLL}}\right)$ $D = 1507.96\,psf$

Therefore, specify **Class V** RCP per ASTM C 76.