REPORT ON
GEOTECHNICAL ENGINEERING SERVICES
UNIVERSITY DRIVE IMPROVEMENTS
HIGLEY ROAD TO POWER ROAD
FCDMC PROJECT NO. FCD 92-12
MARICOPA COUNTY, ARIZONA

Registered Professional Engineer (Civil)
CERTIFICATE NO.
7354
JOHN P.
BOYD
Date Signed 6-24-93
ARIZONA, U.S.A.

THOMAS-HARTIG & ASSOCIATES, INC.

GEOTECHNICAL, MATERIALS TESTING, AND ENVIRONMENTAL CONSULTANTS

A441.901

REPORT ON
GEOTECHNICAL ENGINEERING SERVICES
UNIVERSITY DRIVE IMPROVEMENTS
HIGLEY ROAD TO POWER ROAD
FCDMC PROJECT NO. FCD 92-12
MARICOPA COUNTY, ARIZONA

Submitted to:

Entranco
Attention: William S. Kantor, Jr., P.E.
2400 West Dunlap Avenue, Suite 100
Phoenix, Arizona 85021

Project No. 93-0579
Report No. 2

24 June 1993

Property of
Flood Control District of MC Library
Please Return to
2801 W. Durango
Phoenix, AZ 85009

THOMAS-HARTIG & ASSOCIATES, INC.

Geotechnical, Materials Testing, and Environmental Consultants

7031 West Oakland Street • Chandler, Arizona 85226

Chandler: Phone (602) 961-1169, Fax (602) 940-0952 • Phoenix: Phone (602) 437-5450

Tom W. Thomas, P.E.
James R. Morrow
John P. Boyd, P.E.
Kenneth L. Ricker, P.E.

Charles H. Atkinson, P.E.
James M. Willson, P.E.
Steven A. Haire, P.E.

Judith A. McBee
Dale V. Bedenkop, P.E.
John C. Patton
Kenneth D. Walsh, P.E.

Entranco
2400 West Dunlap Avenue, Suite 100
Phoenix, Arizona 85021

24 June 1993

Attention: William S. Kantor, Jr., P.E.

Subject: Report for Geotechnical Engineering Services
University Drive Improvements
Higley Road to Power Road
FCDMC Project No. FCD 92-12
Maricopa County, Arizona

Project No. 93-0579
Report No. 2

This report presents the results of the geotechnical engineering services authorized on the site for the proposed University Drive Improvements in Maricopa County, Arizona.

The purpose of these services is to determine the soil conditions at the locations indicated which thereby provide a basis for the design discussions and recommendations presented herein. This firm should be notified for evaluation if conditions other than described herein are encountered during construction.

The services performed provide an evaluation at selected locations of the soils throughout the zone of significant foundation influence. Our field services have not included exploration for underlying geologic conditions or evaluation of potential geologic hazards such as seismic activity, faulting, and ground subsidence/cracking potential due to groundwater withdrawal, or the presence of contamination.

The recommendations presented in this report are based upon the project information received and described in "Scope" Part I. This firm should be contacted for review if the design conditions are changed substantially.

If requested, we will be available to review project plans and specifications relative to compliance to the intent of this report.

Respectfully submitted,

THOMAS-HARTIG & ASSOCIATES, INC.

Registered Professional Engineer (Civil) CERTIFICATE NO. 7354 JOHN P. BOYD Date Signed 6-24-93 ARIZONA, U.S.A.

By:

Reviewed By:

Registered Professional Engineer (Civil) CERTIFICATE NO. 10971 KENNETH L. RICKER Date Signed 6-24-93 ARIZONA, U.S.A.

/cm
Copies to: Addressee (5)

TABLE OF CONTENTS

PART I - REPORT

Scope 1
Site Description 1
Investigation 1
Soil and Pavement Conditions 2
Discussion and Recommendations:
- General 3
- Expansion Potential 3
- Storm Drain Support 3
- Lateral Design Parameters 4
- Storm Drain Backfills 4
- Pipe Bedding Materials 5
- Excavation Conditions 5
- Construction Excavation Stability 6
- Detention Pond Slopes 7
- Percolation Tests 7
- Corrosion 7
- Geological Conditions 8

PART II - MATERIALS

Fill Materials 10

PART III - EXECUTION

Site Grading 11

APPENDIX A - FIELD RESULTS

Site Plan 13
Legend 15
Legend of Soil Types 16
Boring Logs 17

APPENDIX B- LABORATORY RESULTS

Sieve and Plasticity Index 25
Direct Shear 26
ASTM D698 30
pH and Minimum Resistivity 34
pH, Soluble Chlorides & Sulfates 35
Expansion 36

Registered Professional Engineer (Civil)
CERTIFICATE NO. 7354
JOHN P. BOYD
Date Signed 6-24-93
ARIZONA, U.S.A.

PROJECT NO. 93-0579

PART I

REPORT

SCOPE

The proposed University Drive storm drainage facilities will include storm drains along University Drive from Higley Road to approximately 200 feet east of 62nd Street and from approximately 100 feet west of 64th Street to 67th Street; a storm drain along Recker Road from University Drive to approximately 705 feet north of University Drive; and a detention pond on the north side of University Drive from 62nd Street to 64th Street. The storm drain diameters will vary from 24 to 72 inches, and embeddment depths will range between approximately 7 and 19 feet. Cast-in-place concrete pipe is being considered for the storm drains. The detention pond will be located in an area with existing drainage channel, detention pond and drywell facilities and will consist of enlarging and deepening the existing pond and constructing inlet and outlet structures between the pond and the University Drive storm drains.

SITE DESCRIPTION

The proposed drainage improvements will be constructed concurrently with repaving of University Drive from Higley Road to Power Road in Maricopa County, Arizona. The proposed University Drive storm drains will be located approximately 5 feet south of the centerline, and the Recker Road branch will be located approximately 20 feet east of the centerline. Both the reconstructed University Drive and the existing Recker Road pavements will include two lanes in each direction with a center turn lane and have an approximate 68-foot width.

INVESTIGATION

The field investigation included a site reconnaissance, 15 test borings at proposed storm drain alignments along University Drive and Recker Road, three test borings within the detention pond area, and three percolation tests in the detention pond area. The locations of test borings and percolation tests are shown on the attached site plans. The test borings were drilled with a CME-75 drill rig using 7-inch diameter hollow stem augers, and the percolation test borings were drilled with a 15-inch diameter flight auger section and conducted in 12-inch casings with a bentonite seal between the casing and the test boring sides. Relatively undisturbed soil samples were obtained from the test borings by driving a 2.42 inch I.D., ring-lined soil sampler at selected intervals. During the test drilling, soils encountered were visually classified and representative bulk soil samples were obtained at selected depths. The results of the test drilling and percolation testing are presented in the boring logs in Appendix A, "Field Test Results".

Representative samples obtained during the test drilling were subjected to the following laboratory analyses:

Test	Samples	Purpose
Sieve Analysis & Atterberg Limits	Representative (15)	Classification and correlation of engineering properties
Direct Shear	Undisturbed (4)	Lateral earth pressure and slope stability analyses
ASTM D698	Representative (4)	Compaction characteristics
pH and Resistivity	Representative (6)	Corrosion potential
pH, Soluble Chlorides, and Sulfates	Representative (6)	Corrosion potential
Expansion	Representative subgrade soil (5)	Swell characteristics
Dry Density and Moisture Content	Undisturbed (67)	In-situ density and moisture determination to correlate engineering properties

The results of the moisture and density testing are presented on the graphical boring logs in Appendix A. The results of the remainder of the testing are presented in Appendix B.

SOIL AND PAVEMENT CONDITIONS

Test Borings 1 through 17, excluding 11 and 16, were drilled in the existing asphalt paved streets. Along University Drive the asphalt concrete thickness varied between 3 and 5.5 inches and the base course varied between 0 and 11 inches, with no base course encountered in Test Borings 4 through 15, inclusive. At Test Boring 17 in Recker Road, the asphalt pavement thickness was 3.5 inches and the base course thickness 13 inches. Soil profiles encountered below the pavement section and in the detention pond area were variable, and detailed descriptions are presented on the boring logs in Appendix A. In general, soils consisted of irregularly stratified sandy clay to clayey sand soil deposits of low to high plasticity and variable stiff to hard consistency. Silty clay soil deposits of low plasticity were encountered to approximately 5 feet in Test Boring 5, and silty sands of medium density and very low

plasticity were encountered to approximately 4 feet in Test Borings 15 and 17 and below approximately 6 feet in Test Boring 20. Soil moisture contents were relatively low with soils described as slightly damp to damp, and no free groundwater was encountered in the test borings during drilling.

DISCUSSION AND RECOMMENDATIONS

General: Geotechnical engineering recommendations for design of drainage facilities are presented in the following sections. These recommendations are based upon the results of the field and laboratory testing presented in Appendices A and B of this report. Alternative recommendations may be possible and will be considered upon request.

Expansion Potential: Tests were performed on five samples to evaluate the swelling potential. The resulting swell measured on compacted subgrades from the test borings ranged between 0.7 and 4.8 percent. The samples were remolded to 95 percent of the maximum ASTM D698 dry density and a moisture content 2 percent below optimum. A 100 psf surcharge pressure was placed on the sample. This swell is considered to range from low to moderate.

Storm Drain Support: The proposed storm drain will be embedded between approximately 7 and 19 feet below surface grade with some shallower facilities possible within the detention pond area. Subsurface soils along the storm drain alignment are relatively strong, and the drain will be lighter than the soil it replaces. Therefore, we anticipate settlements of less than 1/4 inch due to construction related disturbance. Allowable bearing pressures of 5000 psf may be used for miscellaneous structures, manholes, etc. with embeddment depths of 7 feet or more, and 3000 psf for facilities embedded between 2 and 7 feet.

A modulus of subgrade reaction of 150 pci may be used for compacted site soil and natural soil to depths of 5 feet. For cemented natural soils below 5 feet a modulus of subgrade reaction of 250 pci may be used. These values are estimated for a 1 foot square plate and should be multiplied by the reciprocal of the width for wider elements.

Lateral Design Parameters: The following tabulation presents recommendations for lateral stability analyses assuming compacted granular backfills for retaining structures:

[1]Foundation Toe Pressures ---------- 1.33 x allowable
[2]Lateral Backfill Pressures:
Unrestrained walls..... 35 psf/ft.
Restrained walls.....60 psf/ft.
Lateral Passive Pressures:
Surface to 5 foot level:
Continuous walls/footings ----------250 psf/ft.
Spread columns/footings ----------350 psf/ft.
[3]Below 5 foot Level:
Continuous walls/footings ----------400 psf/ft.
Spread columns/footings ----------550 psf/ft.
Coefficient of Base Friction:
Independent of passive resistance------ 0.40
In conjunction with passive resistance - 0.30

[1]Increase in allowable foundation bearing pressure (previously tabulated) for foundation toe pressures due to eccentric or lateral loading. The entire footing bearing surface should remain in compression.

[2]Equivalent fluid pressures for vertical walls and horizontal backfill surfaces (maximum 15-foot height). Backfills must be of compacted granular materials. Pressures do not include temporary forces imposed during compaction of the backfill, swelling pressures developed by over-compacted clayey backfill, hydrostatic pressures from inundation of backfill, or surcharge loads. Walls should be suitably braced during backfilling to prevent damage and excessive deflection. We will estimated compaction forces, on request, when backfill configuration and compaction equipment are defined.

[3]For embedded elements in contact with natural undisturbed clay soils 5 feet or more below existing grade.

Compaction of the backfill soils against embedded footings or walls designed to provide passive resistance should be accomplished to a minimum 95 percent of the maximum ASTM D986 density to develop this resistance with low strains.

Storm Drain Backfills: Backfill adjacent to and over the storm drain will support utilities and pavement sections. In order to limit settlement of the backfill material, the backfill

should be compacted to density criteria presented in Parts II and III of this report. If backfills are not compacted as recommended, subsidence may result in the pavement section and in utilities supported in the backfill. Even properly compacted deep backfills may tend to settle differentially relative to the storm drain which may result in some surface movement and pavement cracking.

Saturation of backfill and development of hydrostatic pressures is possible during construction as the result of the breakage of utility lines or from infiltration of storm water runoff. Backfill compaction should be accomplished by mechanical methods. Water jetting or flooding of loose, dumped backfills must be prohibited.

Pipe Bedding Materials: Sandy clays and clayey sands mostly of medium to high plasticity were predominantly encountered to the expected embedment depth of the proposed storm drain, with only occasional sand intervals encountered (see Test Borings 15 and 17). Either well graded sand (similar to concrete sand) or sand and gravel materials conforming with the MAG specifications for Type B Select Materials (Section 702) are recommended for steel or precast concrete pipe bedding. If any plastic pipe is used, the bedding material should conform with these requirements, but should not contain angular, crushed rock or gravel fragments.

Excavation Conditions: The test drilling and field sampling at the site were performed for design purposes. It is not possible to accurately correlate auger drilling results with the ease or difficulty of digging for various types and sizes of excavation equipment. We present the following general comments regarding excavatability for the designers' information with the understanding that they are approximations based only on test boring data. More accurate information regarding excavatability should be evaluated by contractors or other interested parties from test excavations using the intended equipment.

The near surface soils are non-cemented to weakly cemented and can probably be removed with conventional earth excavating equipment. However, intermittent light to moderate carbonate cementation (caliche) was generally encountered below several feet, and excavations into very stiff to hard cemented soils could be somewhat difficult and require specialized equipment. Prewetting may make excavation easier for cast-in-place pipe if desiccated, cemented clayey soils are present and may also reduce overbreak of any blocky dry clays which have experienced shrinkage cracking.

However, slow penetration of water through site subsurface soils should be expected. Shaping trenches for cast-in-place pipe may not be successful where localized, cohesionless silty sand deposits are encountered (ie. Test Borings 15 and 17). Where such sands are encountered, prewetting or over-excavation and replacement with compacted cohesive backfills may prove necessary to facilitate shaping. All excavations should be sloped or braced as required to provide personnel safety and satisfy local safety code requirements.

Construction Excavation Stability: We anticipate that excavations can be cut vertically into the site soils and remain temporarily stable for a sufficient length of time to install shoring, trench boxes, or pre-cast pipe, except where localized naturally occurring silty sand deposits of major thickness or prior backfills are encountered. Personnel entry into laterally unsupported vertical excavations is not recommended.

The following criteria are presented to aid in the development of excavation plans if personnel entry is required.

1. Unbraced excavations into undisturbed soils should be no steeper than 1H:1V to a depth of approximately 5 feet, or to the bottom of random sand deposits where deeper. Below this level, unbraced excavations in cemented clayey soils can probably be steepened to between 1/4 to 1/2H:1V. Where deep sand layers or existing backfills are encountered, excavation slopes may have to be flattened or horizontal benches provided.

2. Surface areas behind the crest of excavations should be graded so that surface water does not pond within 15 feet of the crest, nor drain into the excavation.

3. Heavy material stockpiles should not be placed within 10 feet of the crest of slopes. Similarly, heavy construction equipment should not pass over or be parked within 10 feet of the crest.

4. The crest of slopes should be monitored daily for evidence of movement or potential problems.

The design of any bracing systems should be reviewed by the geotechnical engineer. Also, observations should be made by the geotechnical engineer during excavating to evaluate site conditions and determine if modifications are necessary in excavation procedures. If unbraced slopes are utilized, some surface raveling, erosion, and spalling should be expected unless measures are taken to stabilize exposed cut surfaces.

Detention Pond Slopes: The proposed detention pond will be predominantly cut below existing grade, but fill slopes may be locally required. Side slopes will be 4:1 (horizontal:vertical) and probably unprotected. These slopes will have an adequate factor of safety against rotational slides. Where fill slopes are required, the existing surface should be leveled and compacted and fill materials placed in horizontal compacted layers as recommended in Parts II and III. Fills should be constructed beyond the designed slope surface and trimmed to final configuration to obtain a dense, compacted slope surface. If the basin does not have erosion protection, slope rilling and channel cutting are likely, and periodic maintenance will probably be required.

Percolation Tests: Shallow percolation tests were conducted in cased 12-inch diameter boring as shown on the accompanying site plan. The test results are attached and indicate the measured percolation rate. The average tested percolation rate was 14.8 minutes per inch which corresponds to approximately 0.34 $ft.^3/hr./ft.^2$ discharge from the bottom of the one foot diameter cased boring. However, the rate of discharge from a detention basin is normally much slower than the tested percolation rate as a result of modeling factors from a 12-inch diameter boring to a wide basin, partial saturation of near surface soils from repetitive wetting, compaction of the basin bottom during excavation and landscaping and siltation. The effective rate of discharge is difficult to determine for unsaturated clayey soils but often appears to be on the order of 5 to 25 times or more slower than percolation test rates from small diameter borings.

Corrosion: Corrosion is most likely to occur in fills and natural soils with high moisture content. Laboratory tests were performed on selected samples to determine pH, soluble sulfates, soluble chlorides and resistivity. The results are presented in Appendix B. Soluble sulfates contents of the tested soils from the storm drain alignments were well less than 0.1 percent. Based on these values, the corrosion

potential to concrete ranges from negligible to slight. Therefore, concrete in contact with soil should use Type I or II cement. Resistivity test results indicate potentials for corrosion of buried metal conduits, and ADOT design criteria would require bituminous coated or aluminum alloy culverts. Consideration should be given to the use of approved non-metallic, coated or cathodic protected conduits. Also, special protection may be necessary where dissimilar metals are placed in close proximity or are joined. We recommend that these test results be reviewed by a person or firm experienced in corrosion protection designs.

Geological Conditions: This site is located in the northeastern part of the Phoenix Basin in an area where moderately deep alluvium (mapped at more than 800 feet)[1] covers rock units forming the valley floor. The nearest rock exposures to the north and east are predominantly pre-Cambrian granitics with some more recent (Tertiary) volcanics and intrusives. Recent faulting or recent movement or Tertiary or older faults have apparently not been reported in the general Phoenix region. Historical data, beginning in the 1880's, show no major seismic events originating in central Arizona. Records of major seismic events originating in Mexico and California show negligible effect in the general Phoenix area. For these reasons, this site is considered to have a very low seismic risk factor, and is designated as Seismic Zone 1 in the Uniform Building Code, 1991 edition.

The site is located adjacent to an area of major land subsidence due to groundwater withdrawal. Carpenter[2] documents approximately 1.6 meters of subsidence for a benchmark near Power Road and Apache Trail (Main Street) between 1948 and 1980. The National Oceanic and Atmospheric Administration[3] (NOAA) plots subsidence greater than 1 meter in the vicinity of Power Road and Main Street and for a short distance north and west, but does not identify specific data points. Apparently the subsidence is continuing. Winikka[4] comments that 1981 level surveys indicate that subsidence is continuing at a rate of 0.2 feet per year, and Pewe[5] comments that even if pumping stopped, subsidence would continue for 20 years.

Several related, documented earth fissures or fissure hazard zones are mapped near the site locality with the nearest fissure trending toward University Drive a short distance east of Power Road. Fissures in the locality were mapped in 1978 by Laney, et.al.[6]; and in 1986 the associated potential fissure hazard zones were mapped by Schumann and Genualdi.[7] The nearest fissure (mapped location) crosses Apache

Trail east of Sossaman Road then trends northwestward toward University Drive approximately 0.4 mile east of Power Road. To our knowledge, this fissure has never been documented as actually extending to University Drive. Since the existing fissure and potential fissure hazard zone (as mapped) do not intersect nor trend toward the project site, it does not, in our opinion, presently jeopardize the planned drainage facilities. However, there is no precise method of determining whether future non-related cracks may develop, existing fissures extend along non-linear alignments, or secondary cracks develop along a diverging alignment from an existing fissure, and enter the site.

[1]Laney, R. L., and Hahn, Mary Ellen, Hydrogeology of the Eastern Part of the Salt River Valley Area, Arizona: Department of the Interior, United States Geological Survey, Water-Resources Investigation Report 86-4147, Tucson, Arizona 1986.

[2]Carpenter, Michael C., Water-Level Declines, Land Subsidence, and Specific Compaction Near Apache Junction, South-Central Arizona: Department of the Interior United States Geological Survey, Water Resources Investigation Report 86-4071, Tucson, Arizona 1987.

[3]Subsidence Monitoring for State of Arizona: U.S. Department of Commerce, National Oceanic and Atmospheric Administration, Rockville, Maryland, 1983.

[4]Winikka, C. G.; 1984; A View of Subsidence: Fieldnotes, Arizona Bureau of Geology and Mineral Technology, Volume 14, Number 3, Fall, 1984.

[5]Pewe, Troy L.; Newspaper Article: Arizona Republic, December 4, 1984.

[6]Laney, R.L., Raymond, R.H., and Winikka, C.G., Maps Showing Water Level Declines, Land Subsidence, and Earth Fissures in South-Central Arizona, U.S.G.S. Water Resources Investigation 78-83, Tucson, Arizona, 1978.

[7]Schumann, H.H. and Genualdi, R.B., Map Showing Land Subsidence, Earth Fissures, and Water Level Change in Southern Arizona: Arizona Bureau of Geology and Mineral Technology, Geological Survey Branch, Tucson, Arizona, 1986.

PART II

MATERIALS

FILL MATERIALS

All fill materials should be inorganic soils free of vegetation, debris, organic contaminants and fragments larger than *6 inches in size. Clayey site soils become moderately expansive when compacted. These soils may be used for required fills below bituminous pavement, in storm drain backfills and in unimproved areas. However, these soils should not be used in structural fill sections below concrete slabs and foundations, nor as retaining wall backfill. Rather, structural fills should be of imported soils or selectively borrowed on-site soils with low expansive potentials. Pipe bedding materials should be non-expansive sand or sand and gravel materials as described previously on page 5 of this report.

Any imported subbase fill materials for use within facility and concrete slab areas should conform with the following specification requirements:

Maximum particle size----------6 inches*
Maximum percent expansion----------1.5**
Maximum percent passing no. 200 sieve--------25***
Maximum plasticity index----------nonplastic***

*Maximum size may be reduced at engineer's direction to satisfy trenching and landscaping requirements, etc.

**Performed on sample remolded to 95 percent of the maximum ASTM D698 density and 2 percent below optimum moisture under a 100 psf surcharge pressure.

***Required for structural backfill materials within 5 feet of retaining walls.

PART III

EXECUTION

SITE GRADING

The following recommendations are presented for site grading within facility and pavement areas. These recommended site grading procedures are intended to provide support for facilities and pavement sections constructed on or below-grade. Therefore, all phases of earthwork should be performed under observation and testing directed by the geotechnical engineer.

1. Remove vegetation and organic contaminants, subsurface remnants of any former facilities, any surface fills and backfills, and any unstable soils (loose, disturbed, wet, etc.) Observe the cleared surface before and during subsequent scarification for evidences of debris-laden soils, disturbance, or loose zones requiring additional removal.

2. Widen any resulting depressions as necessary to accommodate compaction equipment and provide a level base for placing fill.

3. Scarify, moisture condition and compact exposed surface soils to a minimum 8-inch depth beneath structures and pavement areas.

4. Delete subgrade compaction below embedded facilities. Remove disturbed soils and fill any over-cut areas with compacted, low-expansive soils. Maintain the cut surface in a moist condition and prevent inadvertent over-compaction by construction equipment during construction.

5. Place backfill or fill materials required to elevate site areas to specified subbase grade. Fill materials should be placed and compacted in horizontal lifts of thicknesses compatible with the compaction equipment used.

6. Compaction of cleaned exposed soil, and each lift of backfill, subbase fill, and base course materials should be accomplished to the following density criteria:

Material	Percent Compaction (ASTM D698)
Subgrade Soil:	
Below base of footing or mats	95 min.
Below asphalt paving	95 min.
Subbase Fill:	
Below base of footing or mats	95 min.
Below asphalt paving	95 min.
*Structural Backfill	95 min.
**Storm Drain Backfill	
To 2 feet above top of pipe	90 min.
Two feet above top of pipe to roadbed grade	95 min.

*Wall backfill should not be used for support of facilities which are susceptible to damage from settlement of the backfill section.

**Not intended for thrust block, utility line, or structure support.

Compaction of subgrade soil and fill material within 3 feet below asphalt pavement should be accomplished at a moisture content 2 percent below optimum, or lower. Compaction of fill or backfill more than 3 feet below asphalt pavement should be accomplished at a moisture content between optimum -2% and optimum +3%. Compaction should be conducted by mechanical means. Water jetting or settling should not be used.

Natural undisturbed soils or compacted soils subsequently disturbed or removed by construction operations should be replaced with materials compacted as specified above.

APPENDIX A

FIELD RESULTS

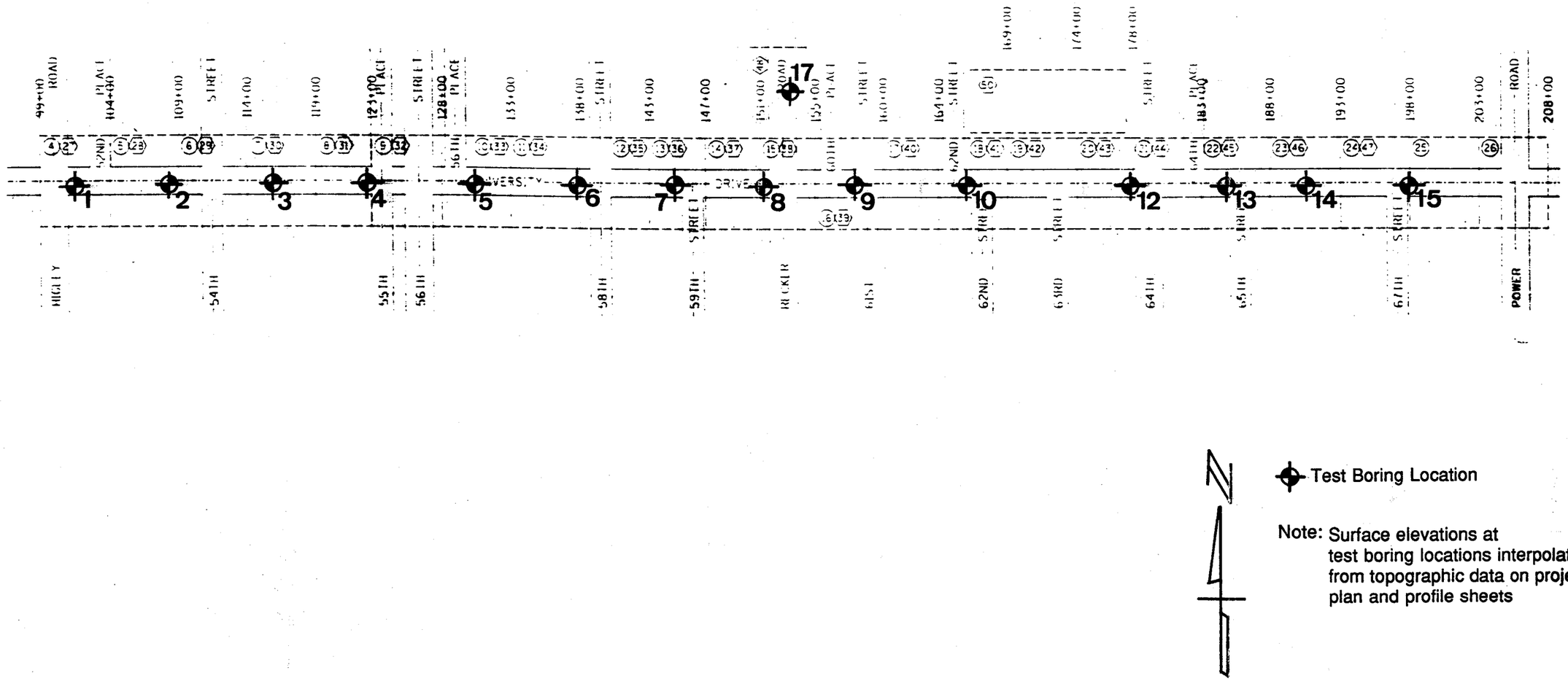

Test Boring Location

Note: Surface elevations at test boring locations interpolated from topographic data on project plan and profile sheets

STORM DRAIN SITE PLAN

Project No. 93-0579

THOMAS-HARTIG & ASSOCIATES, INC.

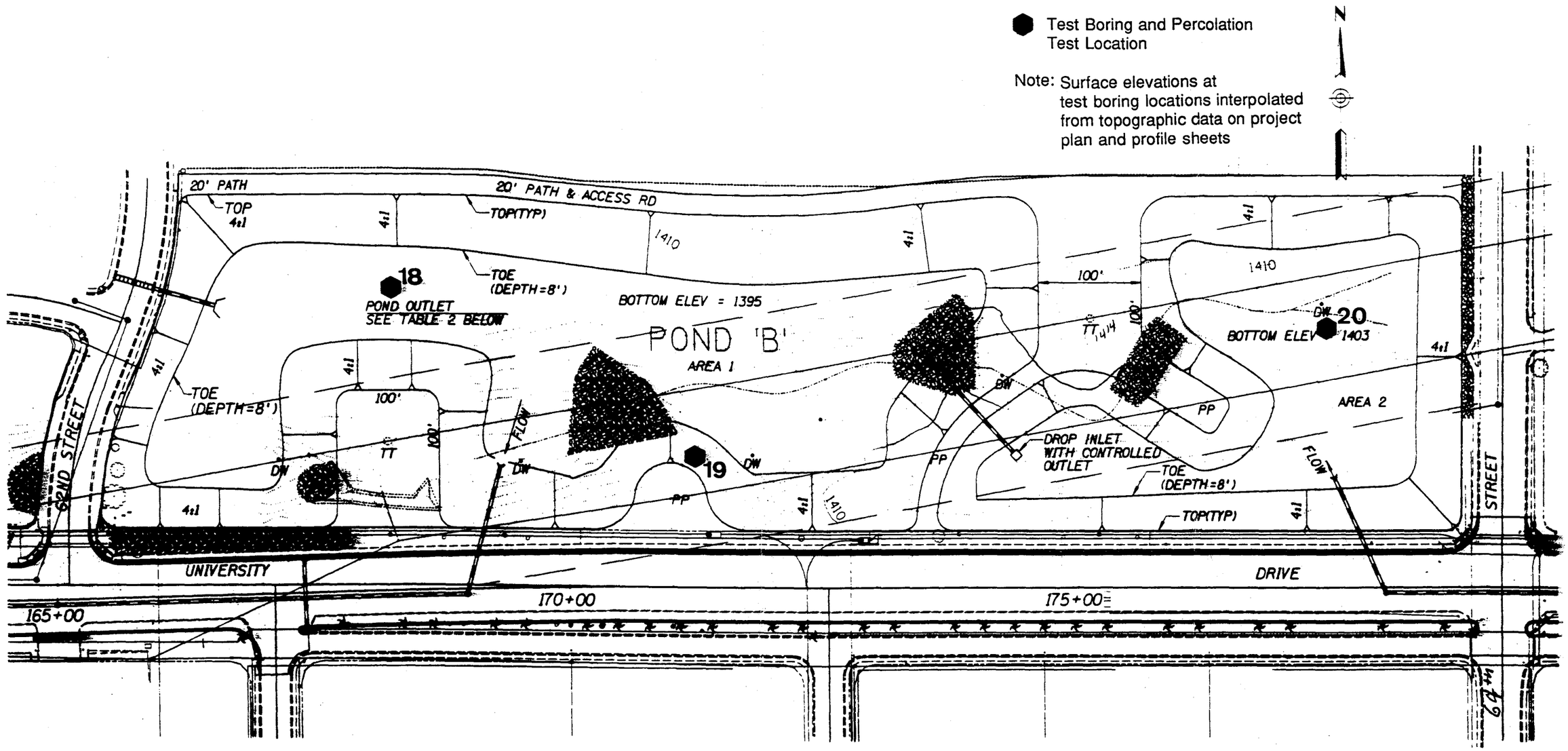

DETENTION POND SITE PLAN

Project No. 93-0579

THOMAS-HARTIG & ASSOCIATES, INC.

LEGEND

SOIL CLASSIFICATION

COARSE-GRAINED SOIL

More than 50% larger than 200 sieve size

SYMBOL	LETTER	DESCRIPTION	MAJOR DIVISIONS
	GW	WELL-GRADED GRAVELS OR GRAVEL-SAND MIXTURES. LESS THAN 5% - #200 FINES	GRAVELS More than half of coarse fraction is larger than No. 4 sieve size
	GP	POORLY-GRADED GRAVELS OR GRAVEL-SAND MIXTURES. LESS THAN 5% - #200 FINES	
	GM	SILTY GRAVELS. GRAVEL-SAND-SILT MIXTURES. MORE THAN 12% - #200 FINES	
	GC	CLAYEY GRAVELS. GRAVEL-SAND-CLAY MIXTURES. MORE THAN 12% - #200 FINES	
	SW	WELL-GRADED SANDS OR GRAVELLY SANDS. LESS THAN 5% - #200 FINES	SANDS More than half of coarse fraction is smaller than No. 4 sieve size
	SP	POORLY-GRADED SANDS OR GRAVELLY SANDS. LESS THAN 5% - #200 FINES	
	SM	SILTY SANDS. SAND-SILT MIXTURES MORE THAN 12% - #200 FINES	
	SC	CLAYEY SANDS. SAND-CLAY MIXTURES MORE THAN 12% - #200 FINES	

FINE-GRAINED SOIL

More than 50% smaller than 200 sieve size

SYMBOL	LETTER	DESCRIPTION	MAJOR DIVISIONS
	ML	INORGANIC SILTS. ROCK FLOUR. AND FINE SANDY OR CLAYEY SILTS OF LOW TO MEDIUM PLASTICITY	SILTS AND CLAYS Liquid limit less than 50
	CL	INORGANIC CLAYS. GRAVELLY CLAYS. SANDY CLAYS. SILTY CLAYS. AND LEAN CLAYS OF LOW TO MEDIUM PLASTICITY	
	OL	ORGANIC SILTS AND ORGANIC SILT-CLAY MIXTURES OF LOW TO MEDIUM PLASTICITY	
	MH	INORGANIC SILTS. MICACEOUS OR DIATOMACEOUS. AND FINE SANDY OR CLAYEY SILTS OF HIGH PLASTICITY	SILTS AND CLAYS Liquid limit greater than 50
	CH	INORGANIC CLAYS. FAT CLAYS. AND SILTY CLAYS OF HIGH PLASTICITY	
	OH	ORGANIC CLAYS AND ORGANIC SILTS OF MEDIUM TO HIGH PLASTICITY	
	PT	PEAT AND OTHER HIGHLY ORGANIC SOILS	

LEGEND FOR GRAPHICAL BORING LOGS:

Log denotes visual approximation unless accompanied by mechanical analysis and Atterberg limits.

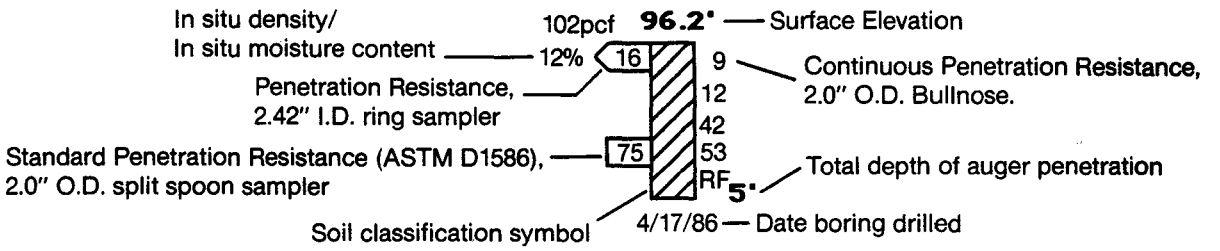

PENETRATION RESISTANCE: Blows per foot using 140 lb. hammer with 30" free-fall unless otherwise noted.

GRAIN SIZES

U.S. STANDARD SERIES SIEVE: 200, 40, 10, 4 — CLEAR SQUARE SIEVE OPENINGS: 3/4", 3", 12"

SILTS & CLAYS DISTINGUISHED ON BASIS OF PLASTICITY	SAND			GRAVEL		COBBLES	BOULDERS
	FINE	MEDIUM	COARSE	FINE	COARSE		

MOISTURE CONDITION (INCREASING MOISTURE →)

DRY — SLIGHTLY DAMP — DAMP (Plastic Limit) — MOIST — VERY MOIST — WET (SATURATED) (Liquid Limit)

CONSISTENCY CORRELATION		RELATIVE DENSITY CORRELATION	
CLAYS & SILTS	BLOWS/FOOT*	SANDS & GRAVELS	BLOWS/FOOT*
VERY SOFT	0-2	VERY LOOSE	0-4
SOFT	2-4	LOOSE	4-10
FIRM	4-8	MEDIUM DENSE	10-30
STIFF	8-16	DENSE	30-50
VERY STIFF	16-32	VERY DENSE	OVER 50
HARD	OVER 32		

*Number of blows of 140 lb. hammer falling 30" to drive a 2" O.D. (1-3/8" I.D.) split-spoon sampler (ASTM D1586).

Project No. 93-0579

LEGEND OF SOIL TYPES

ASPHALT CONCRETE ON SAND AND GRAVEL BASE COURSE (See logs for thicknesses).

SANDY CLAY (CL); brown; medium plasticity; stiff to hard; variable light to moderate cementation (caliche); stratified with some clayey sand lenses (SC); slightly damp to damp.

SANDY CLAY (CH); light brown; high plasticity; very stiff to hard; light to moderate cementation (caliche); stratified with some clayey sand lenses (SC); slightly damp to damp.

CLAYEY SAND (SC); brown to light brown; low to medium plasticity; stiff to hard; poorly graded fine to coarse sand; with traces of fine gravel; variable light to moderate cementation (caliche); stratified with some sandy clay (CL) lenses; slightly damp to damp.

CLAYEY SAND (SC); brown to light brown; medium to high plasticity; stiff to hard; poorly graded fine to coarse sand; with traces of fine gravel; light to moderate cementation (caliche); stratified with some sandy clay lenses (CL/CH); slightly damp to damp.

SILTY SANDY CLAY (CL-ML); brown; low plasticity; firm to stiff; slightly damp.

SILTY SAND (SM); brown; very low plasticity; medium dense; poorly graded fine to coarse sand; traces fine gravel; slightly damp to damp.

SANDY CLAY (CL/CH); brown to light brown; medium to high plasticity; very stiff to hard; light to moderate cementation (caliche); stratified with some clayey sand (SC) lenses; slightly damp to damp.

NOTE: The data presented on the boring logs represents subsurface conditions only at the specific locations and at the time designated. This data may not represent conditions at other locations and/or times. Contacts between soil strata are approximate and changes between soil types may be gradual rather than abrupt. This boring data was compiled primarily for design purposes and should not be construed as part of the plans governing construction or defining construction techniques. Bidders are fully responsible for interpretations or conclusions they draw from the boring log.

GRAPHICAL BORING LOGS

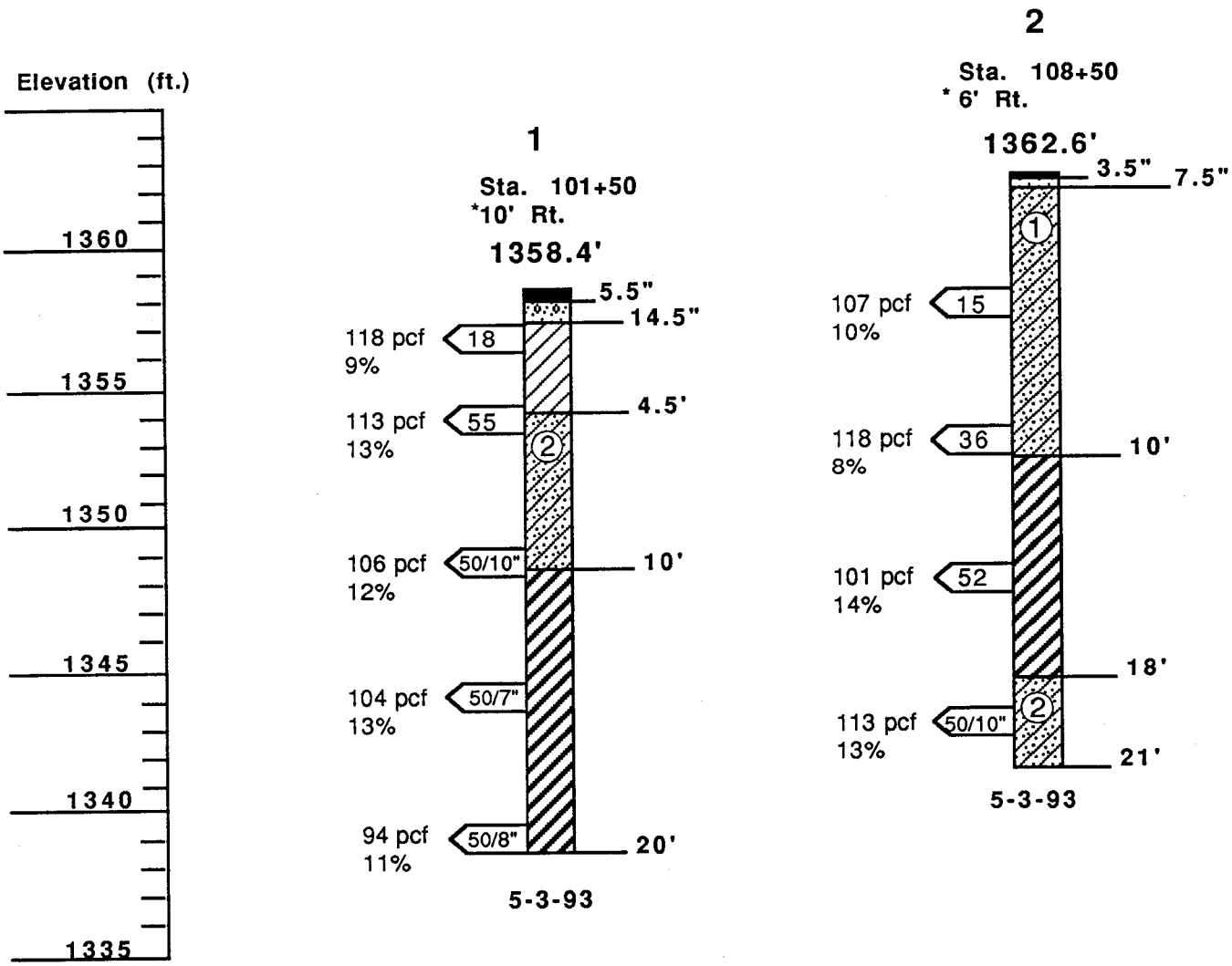

*Offset from Centerline
(typ. of 15)

No free groundwater was encountered in any of the borings during drilling.

All borings drilled with 7" diameter hollow stem auger unless otherwise noted.

NOTE: The data presented on the boring logs represents subsurface conditions only at the specific locations and at the time designated. This data may not represent conditions at other locations and/or times. Contacts between soil strata are approximate and changes between soil types may be gradual rather than abrupt. This boring data was compiled primarily for design purposes and should not be construed as part of the plans governing construction or defining construction techniques. Bidders are fully responsible for interpretations or conclusions they draw from the boring log.

Project No. 93-0579, Report 2
Thomas-Hartig & Associates

GRAPHICAL BORING LOGS

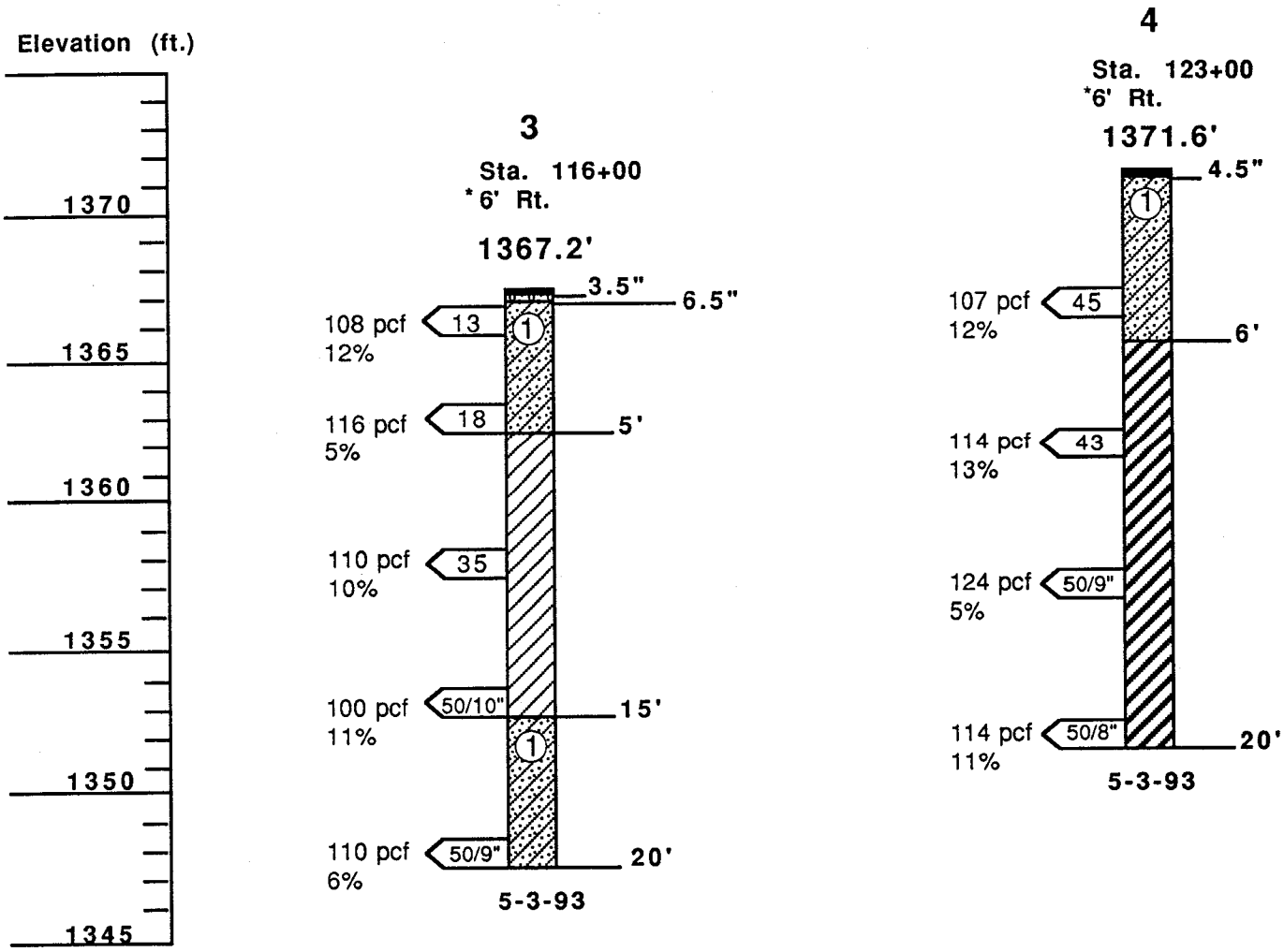

No free groundwater was encountered in any of the borings during drilling.

All borings drilled with 7" diameter hollow stem auger unless otherwise noted.

NOTE: The data presented on the boring logs represents subsurface conditions only at the specific locations and at the time designated. This data may not represent conditions at other locations and/or times. Contacts between soil strata are approximate and changes between soil types may be gradual rather than abrupt. This boring data was compiled primarily for design purposes and should not be construed as part of the plans governing construction or defining construction techniques. Bidders are fully responsible for interpretations or conclusions they draw from the boring log.

GRAPHICAL BORING LOGS

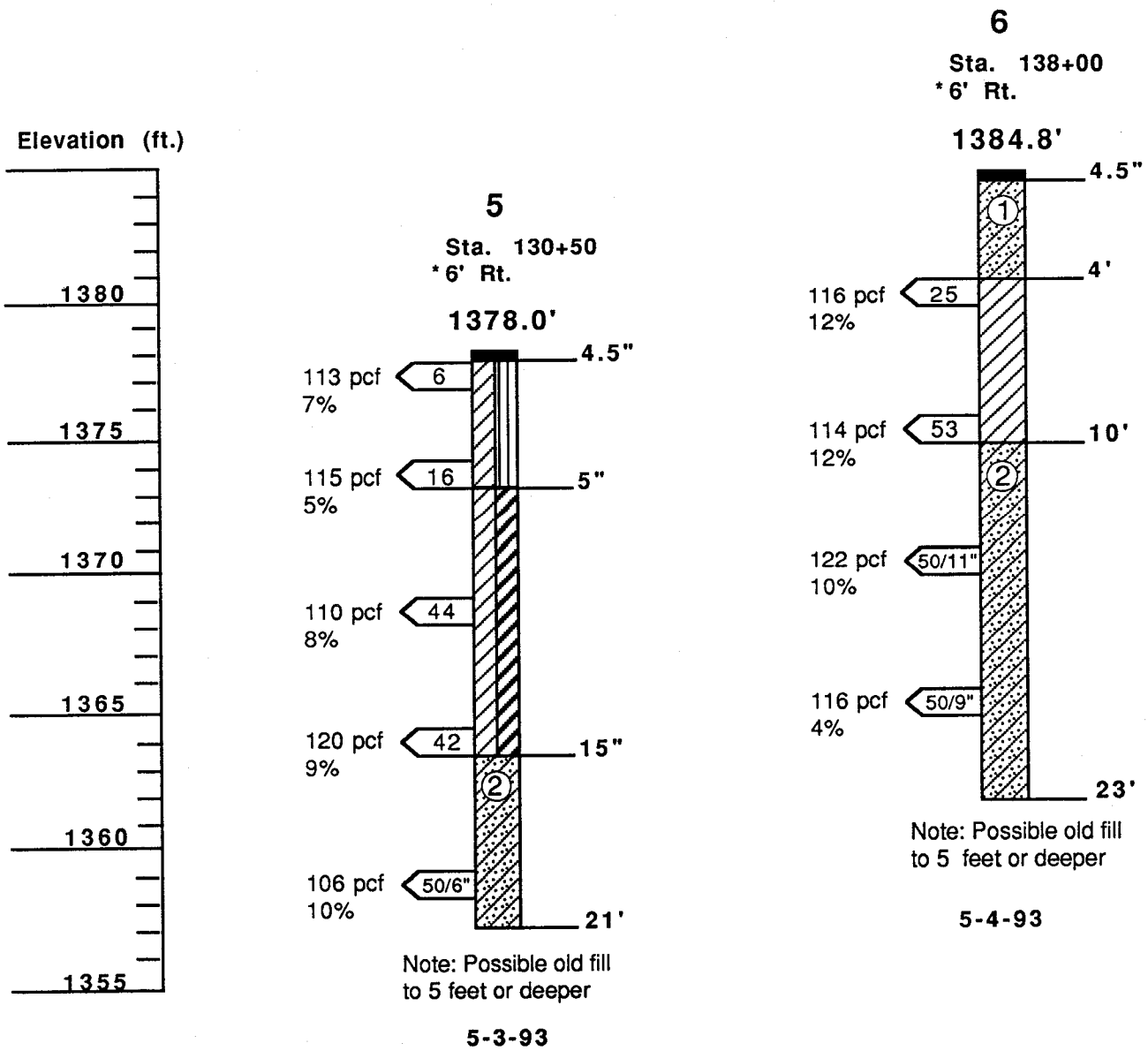

No free groundwater was encountered in any of the borings during drilling.

All borings drilled with 7" diameter hollow stem auger unless otherwise noted.

NOTE: The data presented on the boring logs represents subsurface conditions only at the specific locations and at the time designated. This data may not represent conditions at other locations and/or times. Contacts between soil strata are approximate and changes between soil types may be gradual rather than abrupt. This boring data was compiled primarily for design purposes and should not be construed as part of the plans governing construction or defining construction techniques. Bidders are fully responsible for interpretations or conclusions they draw from the boring log.

GRAPHICAL BORING LOGS

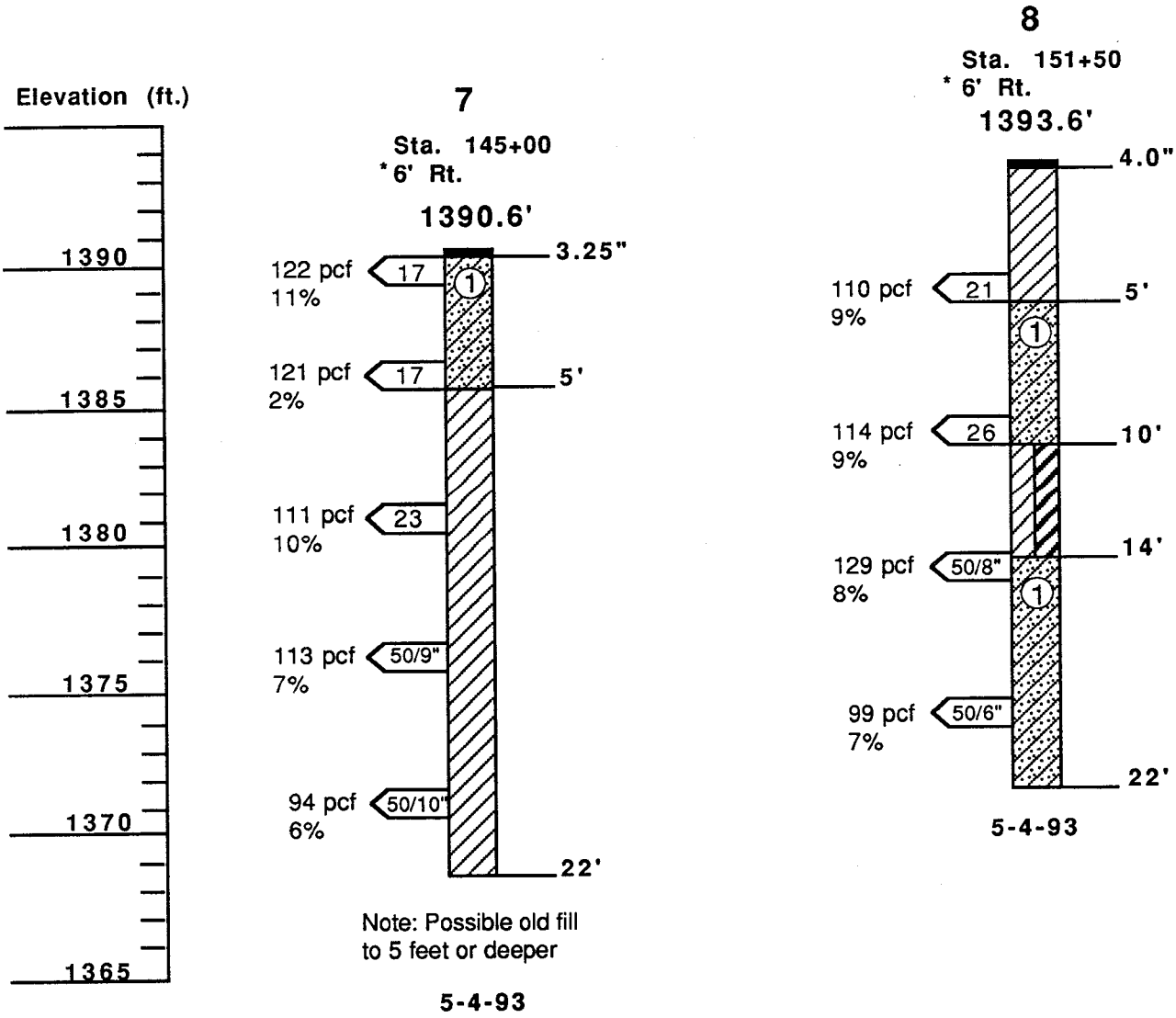

No free groundwater was encountered in any of the borings during drilling.

All borings drilled with 7" diameter hollow stem auger unless otherwise noted.

NOTE: The data presented on the boring logs represents subsurface conditions only at the specific locations and at the time designated. This data may not represent conditions at other locations and/or times. Contacts between soil strata are approximate and changes between soil types may be gradual rather than abrupt. This boring data was compiled primarily for design purposes and should not be construed as part of the plans governing construction or defining construction techniques. Bidders are fully responsible for interpretations or conclusions they draw from the boring log.

GRAPHICAL BORING LOGS

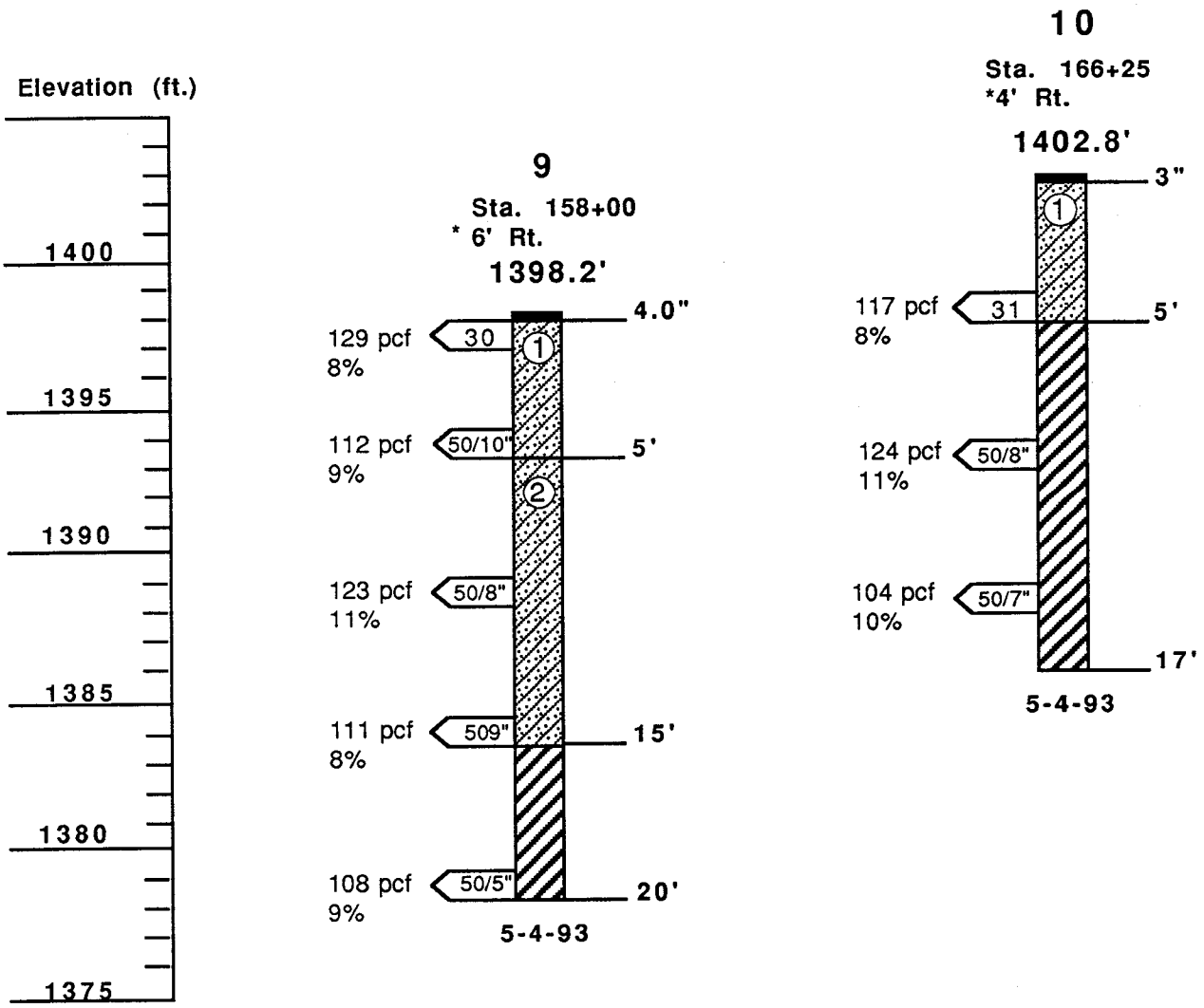

No free groundwater was encountered in any of the borings during drilling.

All borings drilled with 7" diameter hollow stem auger unless otherwise noted.

NOTE: The data presented on the boring logs represents subsurface conditions only at the specific locations and at the time designated. This data may not represent conditions at other locations and/or times. Contacts between soil strata are approximate and changes between soil types may be gradual rather than abrupt. This boring data was compiled primarily for design purposes and should not be construed as part of the plans governing construction or defining construction techniques. Bidders are fully responsible for interpretations or conclusions they draw from the boring log.

GRAPHICAL BORING LOGS

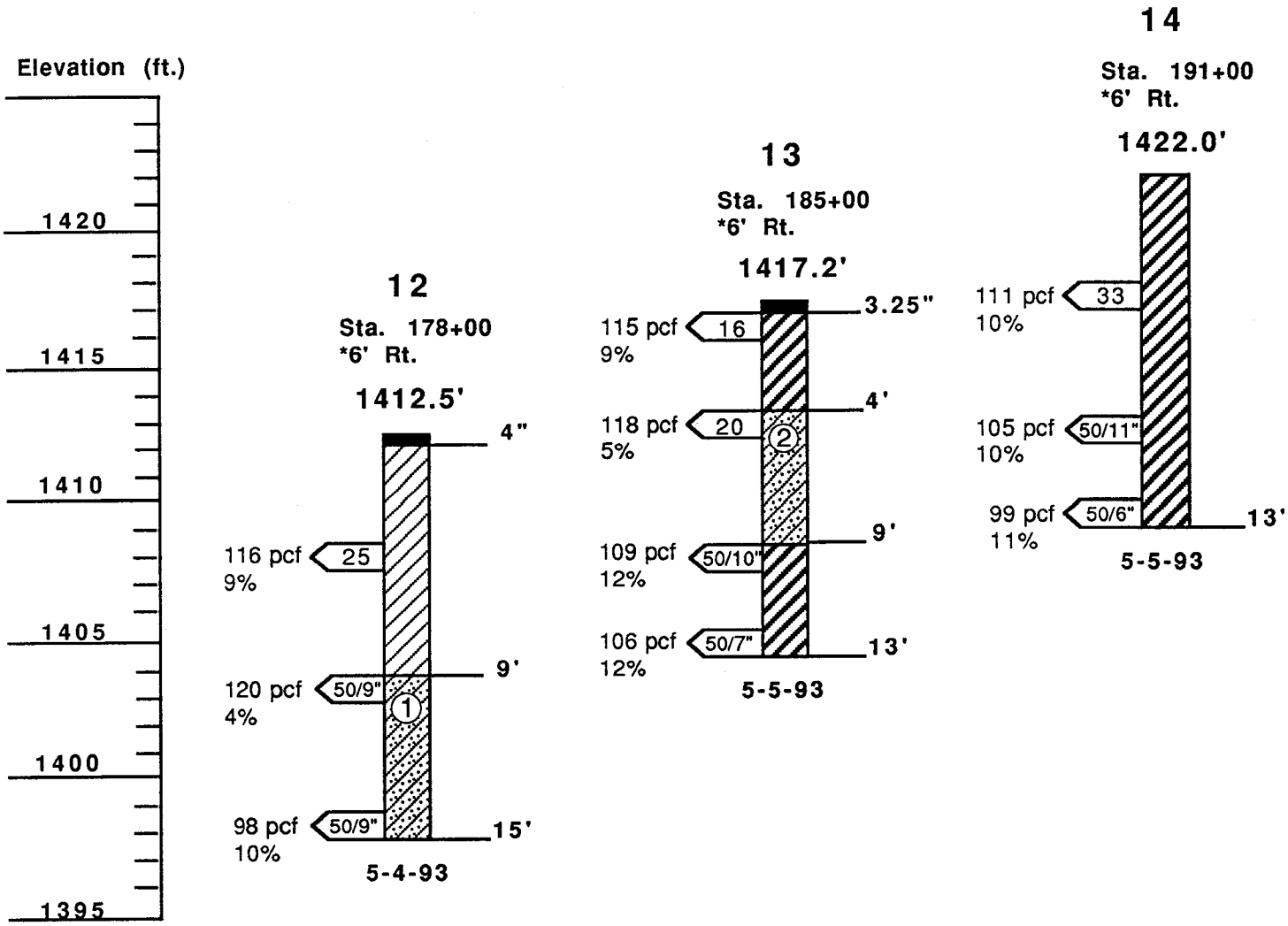

No free groundwater was encountered in any of the borings during drilling.

All borings drilled with 7" diameter hollow stem auger unless otherwise noted.

NOTE: The data presented on the boring logs represents subsurface conditions only at the specific locations and at the time designated. This data may not represent conditions at other locations and/or times. Contacts between soil strata are approximate and changes between soil types may be gradual rather than abrupt. This boring data was compiled primarily for design purposes and should not be construed as part of the plans governing construction or defining construction techniques. Bidders are fully responsible for interpretations or conclusions they draw from the boring log.

GRAPHICAL BORING LOGS

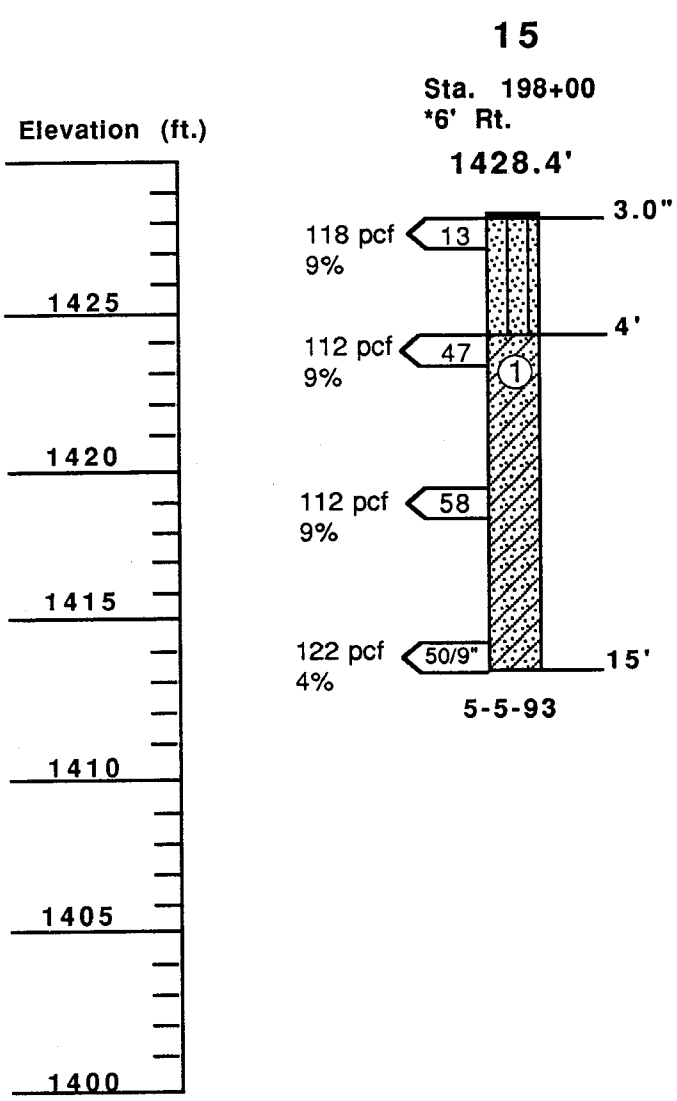

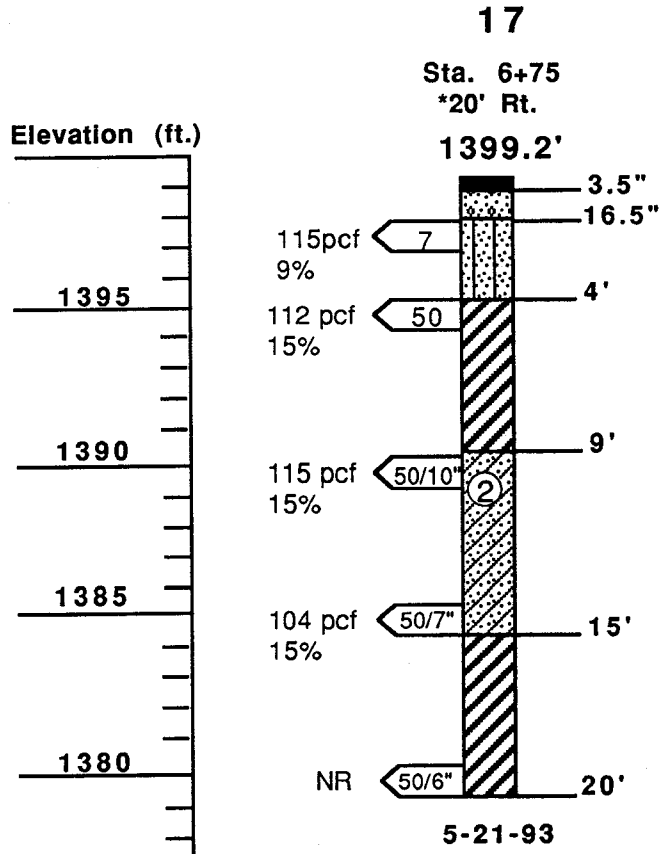

NR = No Recovery

No free groundwater was encountered in any of the borings during drilling.

All borings drilled with 7" diameter hollow stem auger unless otherwise noted.

NOTE: The data presented on the boring logs represents subsurface conditions only at the specific locations and at the time designated. This data may not represent conditions at other locations and/or times. Contacts between soil strata are approximate and changes between soil types may be gradual rather than abrupt. This boring data was compiled primarily for design purposes and should not be construed as part of the plans governing construction or defining construction techniques. Bidders are fully responsible for interpretations or conclusions they draw from the boring log.

GRAPHICAL BORING LOGS

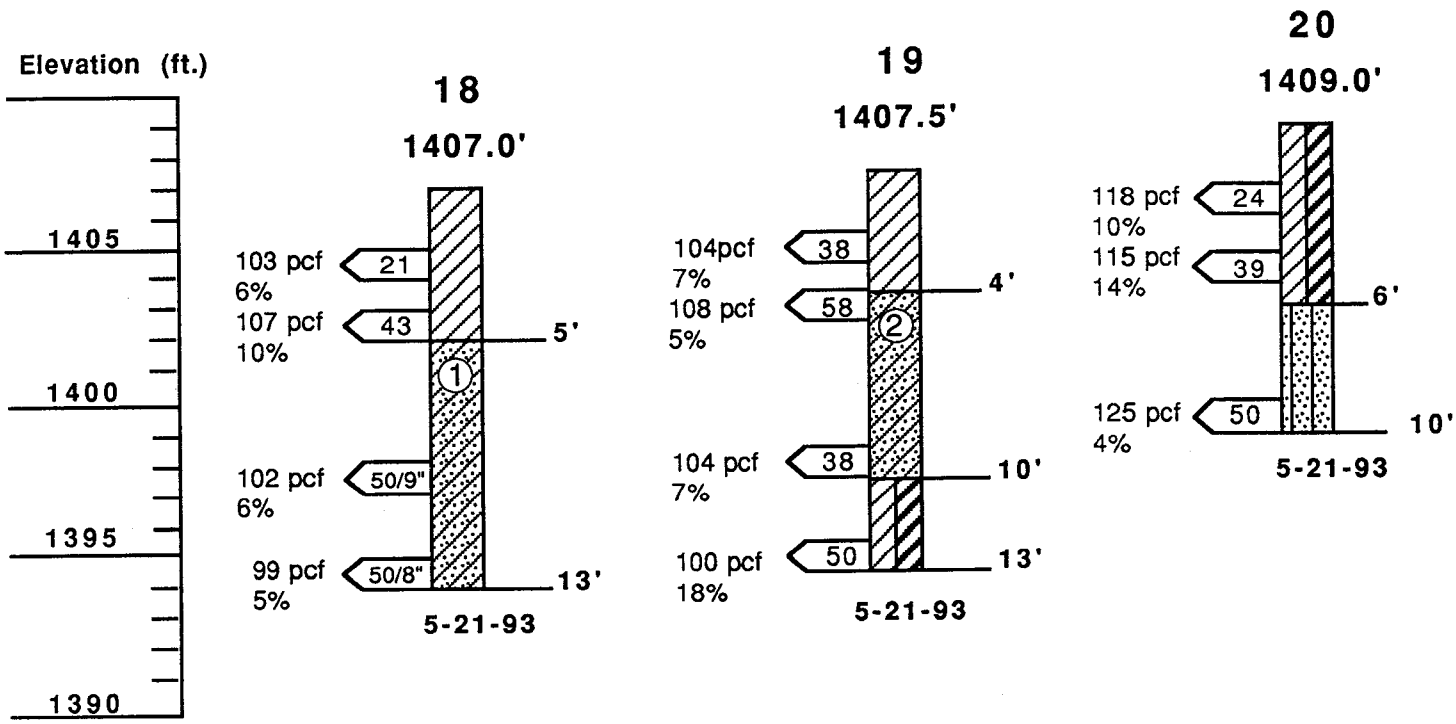

No free groundwater was encountered in any of the borings during drilling.

All borings drilled with 7" diameter hollow stem auger unless otherwise noted.

NOTE: The data presented on the boring logs represents subsurface conditions only at the specific locations and at the time designated. This data may not represent conditions at other locations and/or times. Contacts between soil strata are approximate and changes between soil types may be gradual rather than abrupt. This boring data was compiled primarily for design purposes and should not be construed as part of the plans governing construction or defining construction techniques. Bidders are fully responsible for interpretations or conclusions they draw from the boring log.

APPENDIX B

LABORATORY RESULTS

REPORT ON SIEVE ANALYSIS AND PLASTICITY INDEX

SAMPLE: Date: 6-1-93

Source: Noted Below

Type: Bulk

Material: Surface and Subsurface Soil

Sampled By: TH/Thompson

TESTED: Sieve Analysis and Plasticity Index

RESULTS

			Sieve Size -					Accumulative % Passing						*
Sample	LL	PI	200	100	50	30	16	8	4	3/8"	3/8"	1 1/2"	3"	Class.
1; 5 - 10'	53	27	47	56	60	64	73	84	94	99	100			SC
2; 10 - 15'	62	33	52	61	66	70	77	87	95	100				CH
3; 15 - 20'	46	19	37	43	47	54	66	83	94	99	100			SC
4; 0.5 - 5'	38	19	41	49	53	59	68	81	92	98	100			SC
5; 15 - 20'	60	31	49	56	60	65	73	84	94	99	100			SC
6; 10 - 15'	53	29	36	42	47	55	66	81	93	100				SC
7; 5 - 10'	44	24	51	60	64	69	76	86	95	99	100			CL
8; 15 - 22'	48	21	41	48	52	57	66	81	93	99	100			SC
9; 5 - 10'	51	26	43	49	54	60	71	83	94	99	100			SC
10; 10 - 17'	52	25	51	60	65	70	79	89	96	100				CH
12; 0.5 - 5'	43	24	54	63	67	72	79	89	96	99	100			CL
13; 5 - 9'	58	32	40	47	51	55	65	79	92	99	100			SC
14; 0 - 5'	53	32	61	69	73	77	83	92	97	99	100			CH
15; 5 - 10'	44	22	48	57	61	66	72	83	93	100				SC
17; 10 - 15'	69	40	48	54	58	63	70	81	91	98	100			SC

*Unified Soil Classification

Project No. 93-0579, Report 2

RESULTS OF DIRECT SHEAR TESTS

SAMPLE: **Date:** 19-May-93

Source: 1 @ 9'-10'
Type: Driven Ring; 106 pcf Dry Density; 12% Field Moisture
Material: Sandy Clay (CL)
Sampled By: TH/Thompson

TESTED: ASTM D3080; Samples not soaked.

RESULTS:

Friction Angle (phi) = 25 deg. Cohesion (c) = 1.9 ksf

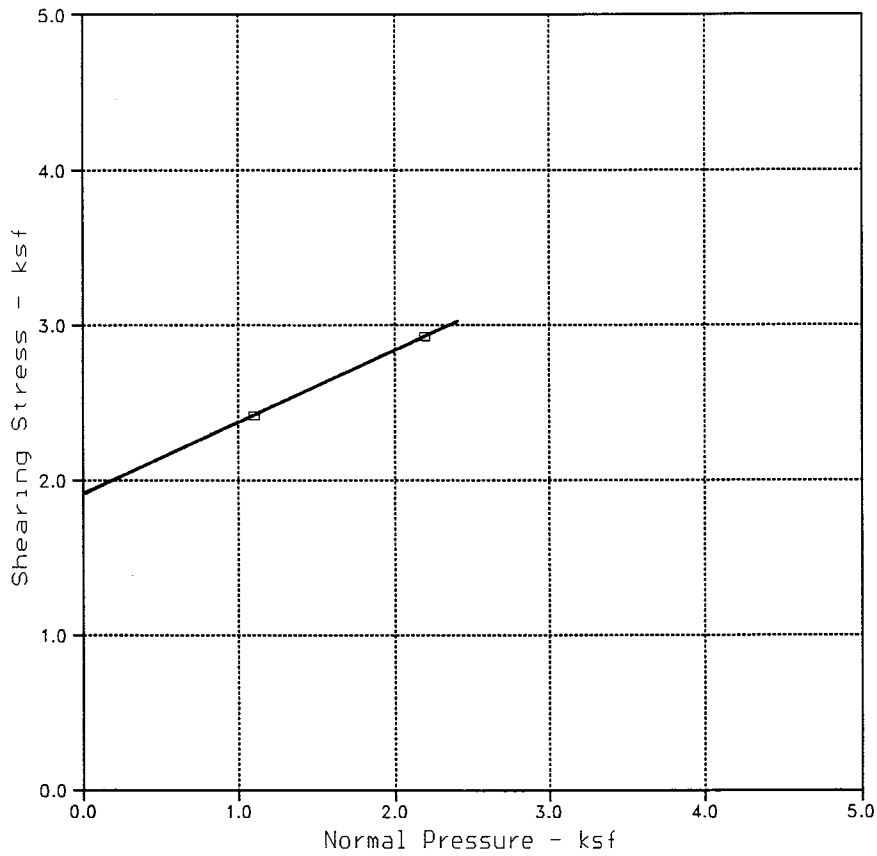

Project No. 93-0579

RESULTS OF DIRECT SHEAR TESTS

SAMPLE: **Date:** 19-May-93

Source: 4 @ 9'-10'
Type: Driven Ring; 114 pcf Dry Density; 13% Field Moisture
Material: Sandy Clay (CH)
Sampled By: TH/Thompson

TESTED: ASTM D3080; Samples not soaked.

RESULTS:

Friction Angle (phi) = 16 deg. Cohesion (c) = 2.2 ksf

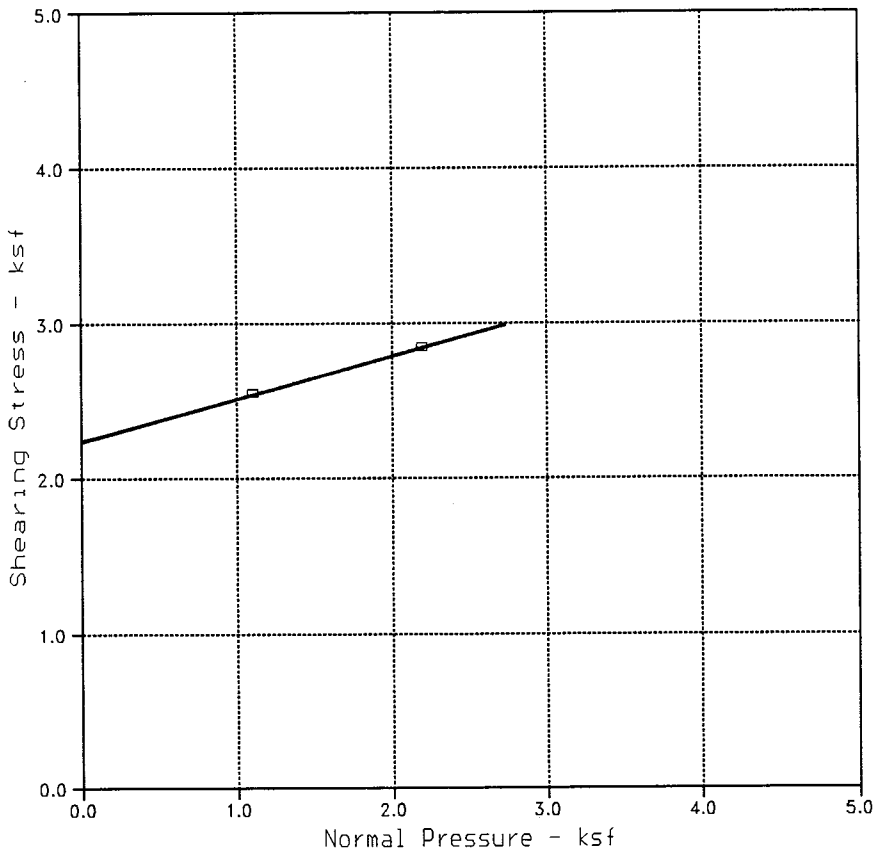

Project No. 93-0579

RESULTS OF DIRECT SHEAR TESTS

SAMPLE: **Date:** 19-May-93

Source: 7 @ 14'-15'
Type: Driven Ring; 113 pcf Dry Density; 7% Field Moisture
Material: Sandy Clay (CL)
Sampled By: TH/Thompson

TESTED: ASTM D3080; Samples not soaked.

RESULTS:

Friction Angle (phi) = 0 deg. Cohesion (c) = 3.4 ksf

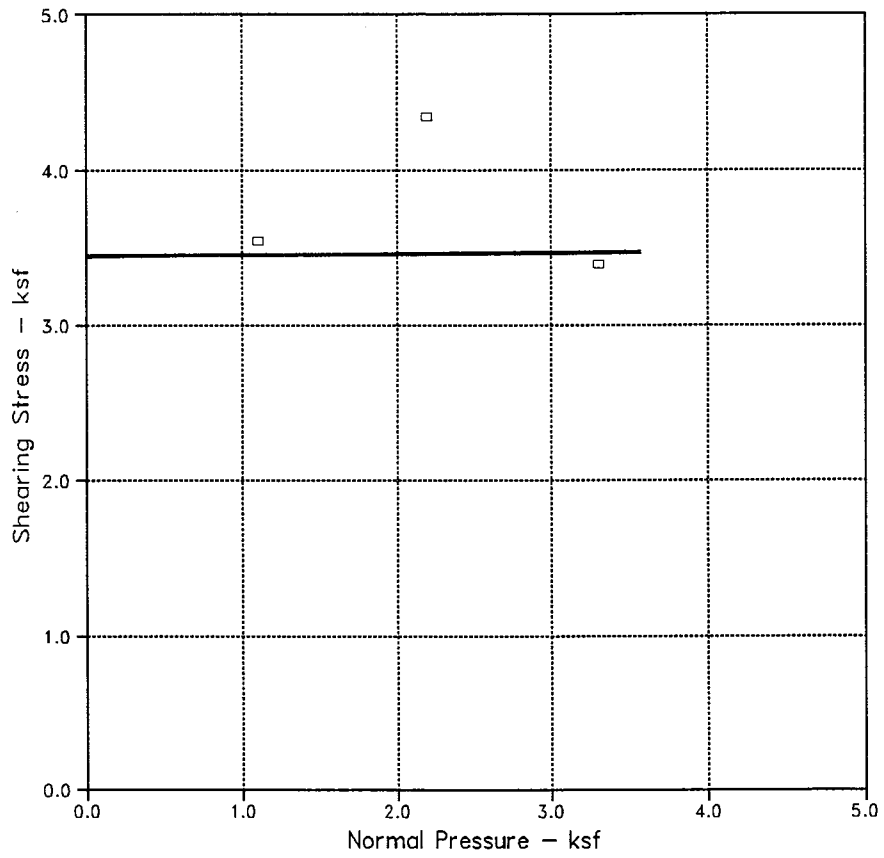

Project No. 93-0579

RESULTS OF DIRECT SHEAR TESTS

SAMPLE: **Date:** 19-May-93

Source: 14 @ 4'-5'
Type: Driven Ring; 111 pcf Dry Density; 10% Field Moisture
Material: Sandy Clay (CH)
Sampled By: TH/Thompson

TESTED: ASTM D3080; Samples not soaked.

RESULTS:

Friction Angle (phi) = 48 deg. Cohesion (c) = 0.6 ksf

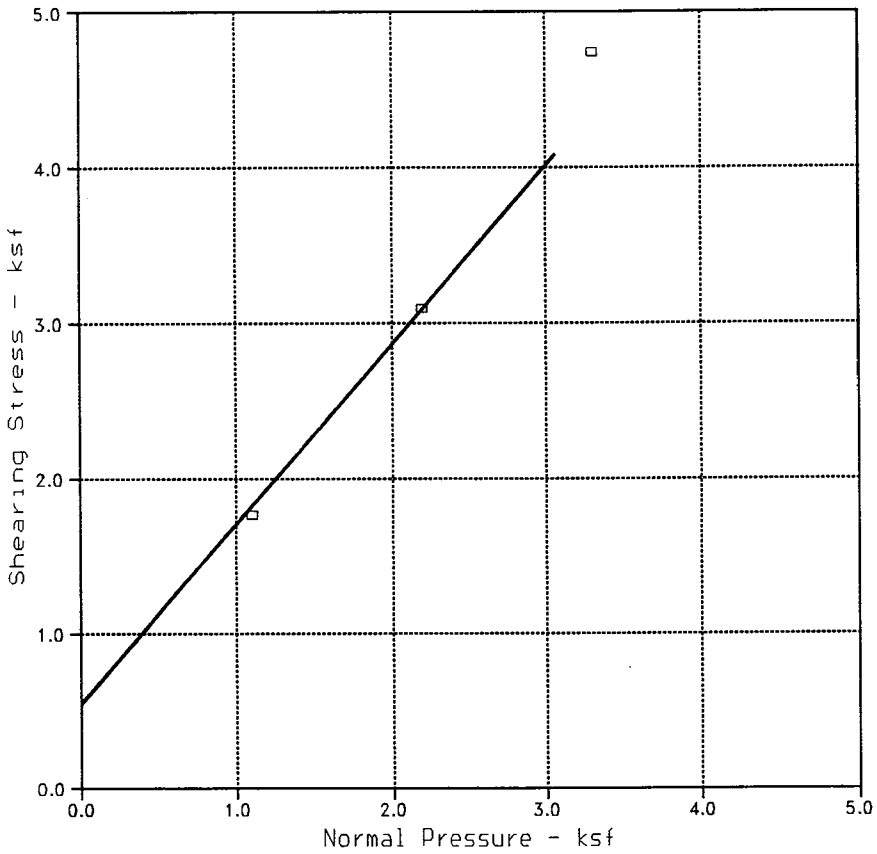

Project No. 93-0579

MAXIMUM DENSITY-OPTIMUM MOISTURE

(ASTM D698, METHOD A)

SAMPLE: **Date:** 27-May-93

Source: 2 @ 10'-15'
Type: Bulk
Material: Sandy Clay (CH)
Sampled By: TH/Thompson

RESULTS:

Maximum Dry Density (pcf) = 110.8

Optimum Moisture Content (%) = 16.0

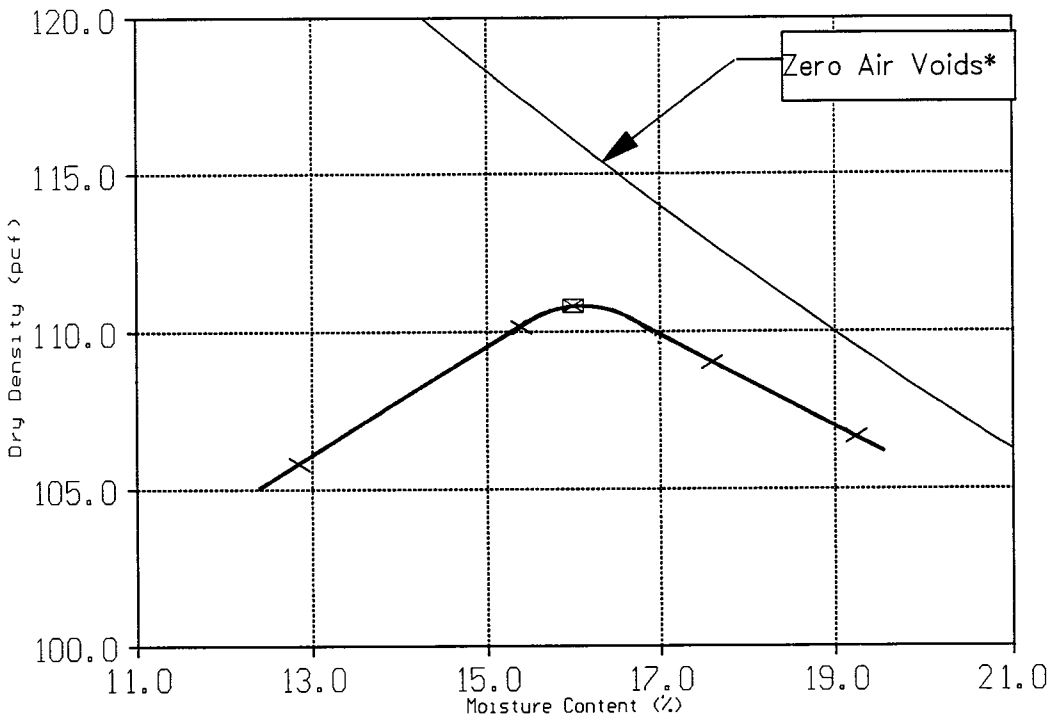

* Assumed Gs = 2.65

Project No.: 93-0579

MAXIMUM DENSITY-OPTIMUM MOISTURE

(ASTM D698, METHOD A)

SAMPLE: **Date:** 27-May-93

Source: 7 @ 5'-10'
Type: Bulk
Material: Sandy Clay (CL)
Sampled By: TH/Thompson

RESULTS:

Maximum Dry Density (pcf) = 114.9

Optimum Moisture Content (%) = 13.9

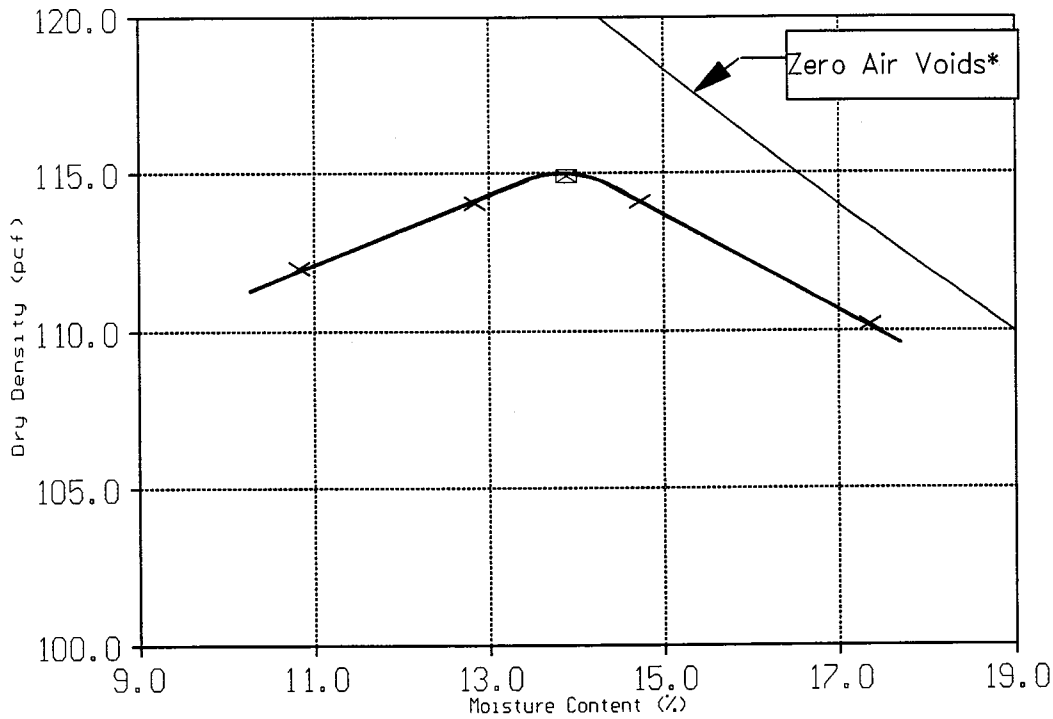

* Assumed Gs = 2.65

Project No.: 93-0579

MAXIMUM DENSITY-OPTIMUM MOISTURE

(ASTM D698, METHOD A)

SAMPLE: **Date:** 27-May-93

Source: 12 @ 0'-5'
Type: Bulk
Material: Sandy Clay (CL)
Sampled By: TH/Thompson

RESULTS:

Maximum Dry Density (pcf) = 116.9

Optimum Moisture Content (%) = 13.4

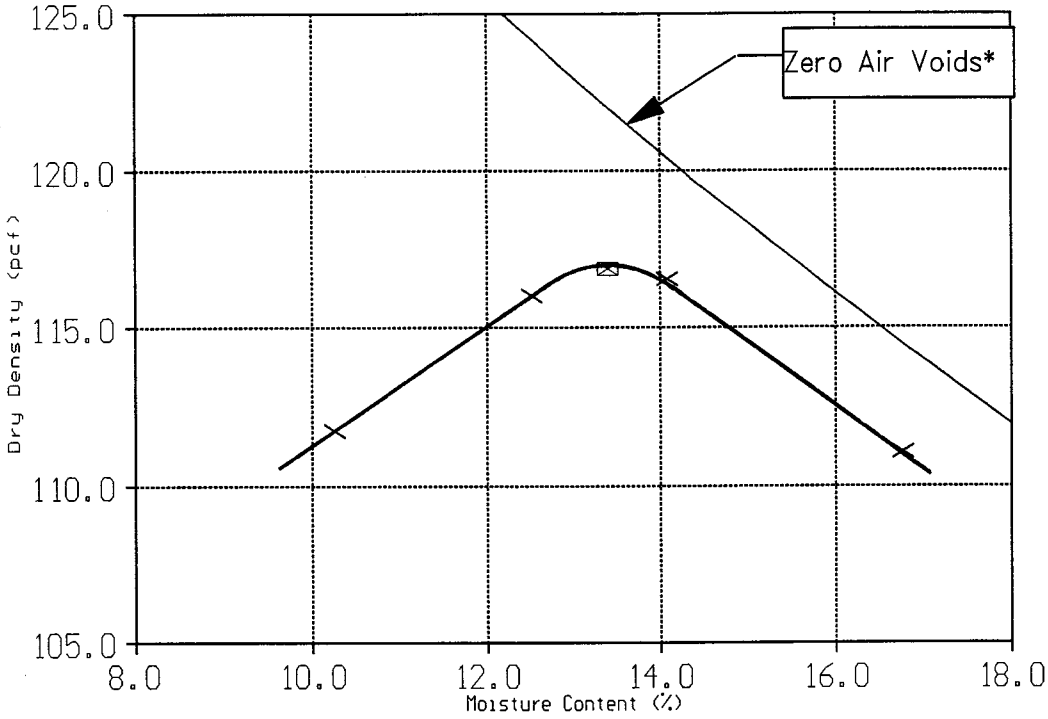

* Assumed Gs = 2.65

Project No.: 93-0579

MAXIMUM DENSITY-OPTIMUM MOISTURE

(ASTM D698, METHOD A)

SAMPLE: **Date:** 27-May-93

Source: 15 @ 5'-10'
Type: Bulk
Material: Clayey Sand (SC)
Sampled By: TH/Thompson

RESULTS:

Maximum Dry Density (pcf) = 116.3

Optimum Moisture Content (%) = 12.8

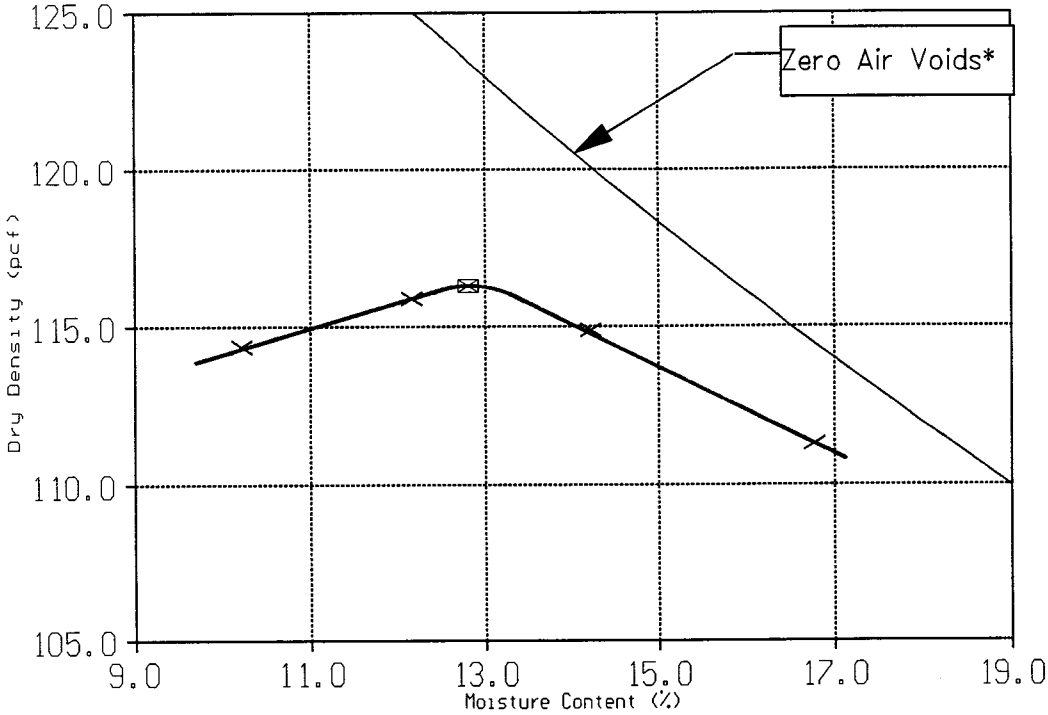

* Assumed Gs = 2.65

Project No.: 93-0579

REPORT ON pH AND MINIMUM RESISTIVITY

SAMPLE: Date: 6-1-93

Source: Noted Below
Type: Bulk Sample
Material: Subsurface Soil
Sampled By: TH/Thompson

TESTED: pH and Minimum Resistivity

TEST RESULTS

Sample	pH	Minimum Resistivity (ohm-cm)
1; 5 - 10'	8.1	2430
4; 5 - 05'	8.2	2360
7; 5 - 10'	8.0`	1140
8; 5 - 10'	8.4	1580
13; 5 - 09'	8.8	2570
14; 5 - 05'	8.3	1570

Project No. 93-0579

REPORT ON pH, SOLUBLE CHLORIDES & SULFATES

SAMPLE: Date: 6-3-93

Source: Noted Below
Type: Bulk Sample
Material: Subsurface Soil
Sampled By: TH/Thompson

TESTED: pH, Soluble Chlorides & Sulfates

TEST RESULTS

Sample	pH	Soluble Chlorides Percent	Soluble Sulfates Percent
2; 10 - 15'	8.3	0.0190	0.0150
5; 15 - 20'	7.9	0.0160	0.0090
8; 15 - 22'	9.3	0.0100	0.0210
10; 10 - 17'	9.3	0.0200	0.0300
15; 5 - 10'	8.0	0.0090	0.0060
17; 10 - 15'	8.1	0.0040	0.0120

Project No. 93-0579

REPORT ON EXPANSION TEST

SAMPLE: Date: 6-1-93

Source: Noted Below
Type: Bulk Sample
Material: Surface Soil
Sampled By: TH/Thompson

TESTED: Percent expansion upon soaking of remolded sample compacted to approximately 95% of the maximum ASTM D698 dry density at approximately 2% less than optimum moisture content.

Sample	Dry Density (pcf)	Initial Moisture (Percent)	Surcharge Pressure (psf)	Expansion Upon Soaking (Percent)
3; 0.5' - 3.5'	115	11	100	1.55
5; 0.4' - 3.4'	122	7	100	0.69
8A; 0.3' - 3.3'	109	14	100	2.47
12; 0.3' - 5'	111	11	100	3.02
13; 0.3' - 3.3'	107	13	100	4.78

Project No. 93-0579

Thomas-Hartig & Associates, Inc.