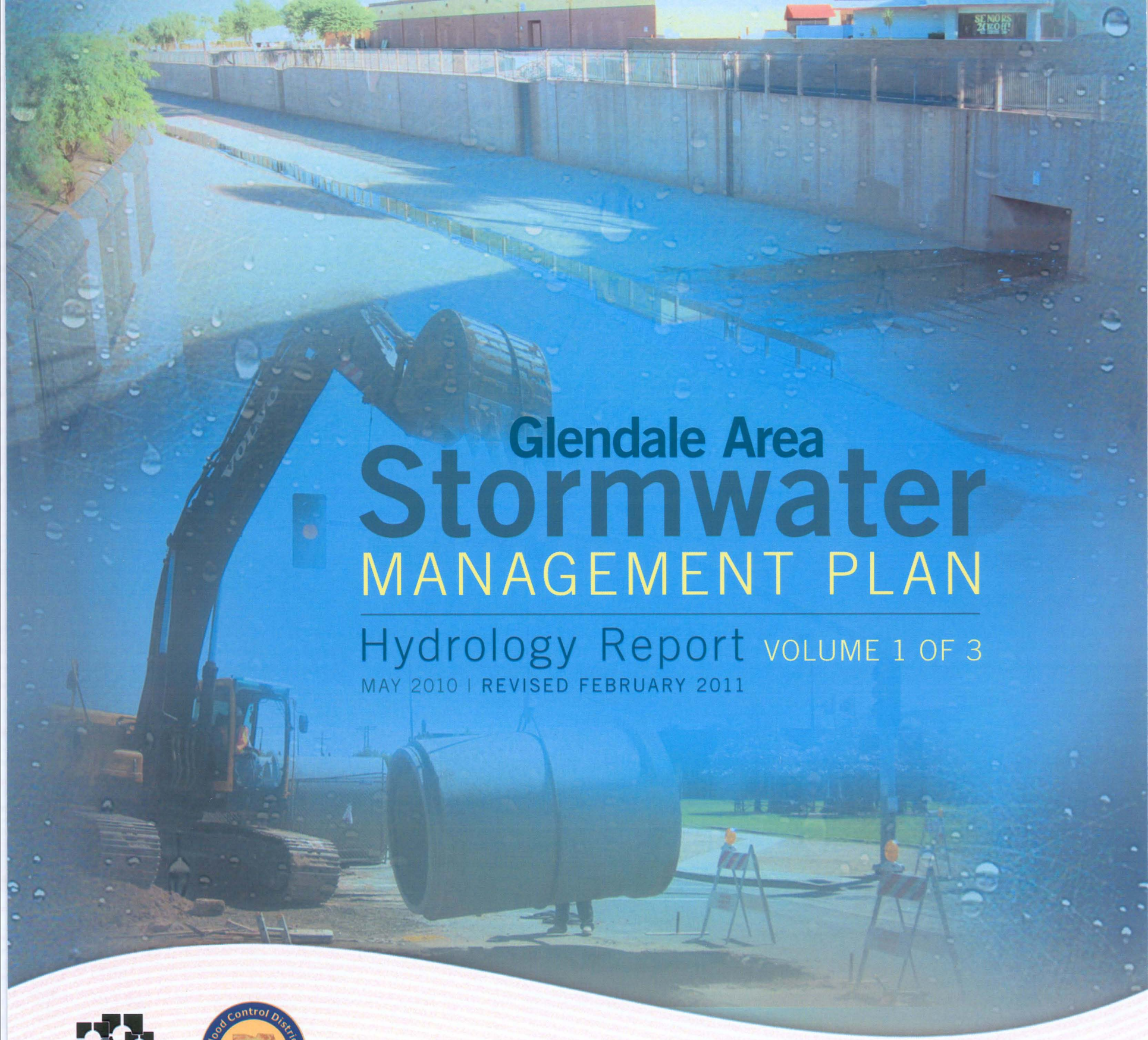

Glendale Area Stormwater MANAGEMENT PLAN

Hydrology Report VOLUME 1 OF 3

MAY 2010 | REVISED FEBRUARY 2011

GLENDALE AZ

Flood Control District of Maricopa County

Prepared for: City of Glendale and the Flood Control District of Maricopa County

Kimley-Horn and Associates, Inc.

Kimley-Horn and Associates, Inc.

GLENDALE AREA STORMWATER MANAGEMENT PLAN

HYDROLOGY REPORT VOLUME 1 OF 3

MARYVALE ADMS WATERSHED AND GLENDALE/PEORIA ADMPU WATERSHED

FINAL

Prepared for:
City of Glendale
5850 W. Glendale Ave., Ste. 315
Glendale, AZ 85301

In Association with
Flood Control District of Maricopa County
2801 W. Durango Street
Phoenix, AZ 85009

Prepared by:
Kimley-Horn and Associates, Inc.
7878 North 16th Street
Suite 300
Phoenix, AZ 85020

Registered Professional Engineer (Civil) CERTIFICATE NO. 50746 MELANIE A. FIFE Date Signed 2/9/11 ARIZONA, U.S.A. Expires 03-31-2013

Registered Professional Engineer (Civil) CERTIFICATE NO. 36852 DAVID E. JENSEN Date Signed 2/9/11 ARIZONA U. S. A. EXPIRES 9/30/2013

091910009
May 2010
Revised February 2011

Copyright © 2011, Kimley-Horn and Associates, Inc.

This document, together with the concepts and designs presented herein, as an instrument of service, is intended only for the specific purpose and client for which it was prepared. Reuse of and improper reliance on this document without written authorization and adaptation by Kimley-Horn and Associates, Inc., shall be without liability to Kimley-Horn and Associates, Inc.

Registered Professional Engineer (Civil) CERTIFICATE NO. 36852 DAVID E. JENSEN Date Signed 2/9/11 ARIZONA U. S. A.

EXPIRES 9/30/2013

Registered Professional Engineer (Civil) CERTIFICATE NO. 50746 MELANIE A. FIFE Date Signed 2/9/11 ARIZONA, U.S.A. Expires 03-31-2013

TABLE OF CONTENTS

Volume 1

Section | Page No.

1.0 Introduction 1
- 1.1 Purpose 1
- 1.2 Contact Information 1
- 1.3 Location 2
- 1.4 General Description 2

2.0 Previous Hydrologic Investigations 6
- 2.1 Drainage Reports 6
- 2.2 As-Built Plans 7

3.0 Nomenclature 8

4.0 Hydrologic Parameters 10
- 4.1 General Model Description 10
- 4.2 Rainfall Data 11
- 4.3 Topographic Mapping 11
- 4.4 Subbasin Delineation 13
- 4.5 Flow paths and Times of Concentration 13
- 4.6 Land Use 14
- 4.7 Soils 15
- 4.8 Rainfall Loss Parameters 15
- 4.9 Retention 15
- 4.10 Storage Routing 16
- 4.11 Channel Routing 18
- 4.12 Diversions 21
  - 4.12.1 Storm Drain Diversions 21
  - 4.12.2 Multiple Street Diversions 21
  - 4.12.3 Single Street Intersection Diversions 22
  - 4.12.4 Parallel Street Diversions 22
  - 4.12.5 Topographic Diversions 24
  - 4.12.6 Channel Capacity Diversions 24
- 4.13 Cumulative Area for Areal Reduction 26

5.0 Significant Drainage Features 27
- 5.1 Grand Avenue 27
- 5.2 Grand Canal 27
- 5.3 Bethany Home Outfall Channel 28
- 5.4 Arizona Canal Diversion Channel 29
- 5.5 Arrowhead Lakes 29

6.0 Verification and Conclusions 31
- 6.1 Comparisons with Previous Studies 31
- 6.2 Verification Using Regression Analysis 31
- 6.3 Conclusions 32

7.0 References 33

Registered Professional Engineer (Civil) CERTIFICATE NO. 36852 DAVID E. JENSEN Date Signed 2/9/11 ARIZONA U. S. A.
EXPIRES 9/30/2013

Registered Professional Engineer (Civil) CERTIFICATE NO. 50746 MELANIE A. FIFE Date Signed 2/9/11 ARIZONA, U.S.A. Expires 03-31-2013

TABLE OF CONTENTS (continued)

Volume 1 (continued)

List of Tables

Table 1. Boundary Abbreviations 8
Table 2. Prefixes for Modeling Operations 9
Table 3. Maryvale ADMS Regional Detention Basins 17
Table 4. Glendale/Peoria ADMPU Regional Detention Basins. 18
Table 5. Roughness Coefficients. 19
Table 6. Storage Routing Upstream of Grand Avenue. 27
Table 7. Storage Routing Upstream of the Grand Canal. 28
Table 8. Storage Routing Along the Bethany Home Outfall Channel. 29
Table 9. Comparison of Attenuation from Arrowhead Lakes. 30

List of Figures

Figure 1. Vicinity Map 3
Figure 2. Typical Maryvale ADMS Watershed Subbasin Schematic 10
Figure 3. FCDMC Mapping Sources 12
Figure 4. Typical Parallel Street Diversion within the Maryvale ADMS Watershed 23
Figure 5. Typical Parallel Street Diversion within the Glendale/Peoria ADMPU Watershed. 24

Registered Professional Engineer (Civil) CERTIFICATE NO. 36852 DAVID E. JENSEN Date Signed 2/9/11 ARIZONA U. S. A.

EXPIRES 9/30/2013

Registered Professional Engineer (Civil) CERTIFICATE NO. 50746 MELANIE A. FIFE Date Signed 2/9/11 ARIZONA, U.S.A. Expires 03-31-2013

TABLE OF CONTENTS (CONTINUED)

Volume 1 (continued)

List of Appendices

Appendix A Maryvale ADMS Area DDMSW Data
- Rainfall Data
- Existing and Future Subbasin Data
- Existing and Future Land Use by Subbasin
- Soils by Subbasin

Appendix B Glendale/Peoria ADMPU Area DDMSW Data
- Rainfall Data
- Subbasin Slope Adjustments
- Existing and Future Subbasin Data
- Existing and Future Land Use by Subbasin
- Soils by Subbasin

Appendix C Land Use Data
- Comparison of Glendale and Phoenix Land Use with MAG
- DDMSW Land Use Defaults
- Land Use Parameters Documentation

Appendix D Retention Calculations
- Maryvale ADMS Area Calculations
- Glendale/Peoria ADMPU Area Calcuations

Appendix E Storage Routing Calculations
- Arrowhead Lakes Map and Calculations
- Regional Detention Basins Calculations

Appendix F Typical Street and Channel Sections
- Typical Channel Sections Summary
- Typical Street Sections Summary
- City of Glendale Typical Street Sections
- City of Phoenix Typical Street Sections
- City of Peoria Typical Street Sections

Appendix G Routing and Diversion Data
- Maryvale ADMS Area Data
- Glendale/Peoria ADMPU Area Data

Appendix H Cumulative Area Calculations
- Maryvale ADMS Area Calculations
- Glendale/Peoria ADMPU Area Calculations

Appendix I HEC-1 Model Results
- Maryvale ADMS Area Model Results
- Glendale/Peoria ADMPU Area Model Results

Registered Professional Engineer (Civil) CERTIFICATE NO. 36852 DAVID E. JENSEN Date Signed 2/9/11 ARIZONA U. S. A.
EXPIRES 9/30/2013

Registered Professional Engineer (Civil) CERTIFICATE NO. 50746 MELANIE A. FIFE Date Signed 2/9/11 ARIZONA, U.S.A. Expires 03-31-2013

TABLE OF CONTENTS (CONTINUED)

Volume 2

List of Appendices

Appendix J Exhibits

List of Exhibits in Appendix J

Exhibit 1. Existing Conditions HEC-1 Schematic

Exhibit 2. Future Conditions HEC-1 Schematic

Exhibit 3. Subbasin Delineation Map

Exhibit 4. Existing Conditions Land Use Map

Exhibit 5. Future Conditions Land Use Map

Exhibit 6. Soils Map

Exhibit 7. Pre- and Post-1990 Developed Areas Map

Exhibit 8. Pipe Routing Map

Exhibit 9. Hydrology Results for the Existing Conditions 100-Year Storm Event

Exhibit 10. Hydrology Results for the Future Conditions 100-Year Storm Event

Exhibit 11. Hydrology Results for the 10-Year Storm Event

Registered Professional Engineer (Civil) CERTIFICATE NO. 36852 DAVID E. JENSEN Date Signed 2/9/11 ARIZONA U. S. A.

EXPIRES 9/30/2013

Registered Professional Engineer (Civil) CERTIFICATE NO. 50746 MELANIE A. FIFE Date Signed 2/9/11 ARIZONA, U.S.A. Expires 03-31-2013

TABLE OF CONTENTS (CONTINUED)

Volume 3

List of Models

File Name	Description
MV6E100	Maryvale ADMS Area Existing Conditions 100-Year, 6-Hour Storm
GP6E100	Glendale/Peoria ADMPU Area Existing Conditions 100-Year, 6-Hour Storm
MV24E100	Maryvale ADMS Area Existing Conditions 100-Year, 24-Hour Storm
GP24E100	Glendale/Peoria ADMPU Area Existing Conditions 100-Year, 24-Hour Storm
MV6E10	Maryvale ADMS Area Existing Conditions 10-Year, 6-Hour Storm
GP6E10	Glendale/Peoria ADMPU Area Existing Conditions 10-Year, 6-Hour Storm
MV24E10	Maryvale ADMS Area Existing Conditions 10-Year, 24-Hour Storm
GP24E10	Glendale/Peoria ADMPU Area Existing Conditions 10-Year, 24-Hour Storm
MV6F100	Maryvale ADMS Area Future Conditions 100-Year, 6-Hour Storm
GP6F100	Glendale/Peoria ADMPU Area Future Conditions 100-Year, 6-Hour Storm
MV24F100	Maryvale ADMS Area Future Conditions 100-Year, 24-Hour Storm
GP24F100	Glendale/Peoria ADMPU Area Future Conditions 100-Year, 24-Hour Storm
MV6F10	Maryvale ADMS Area Future Conditions 10-Year, 6-Hour Storm
GP6F10	Glendale/Peoria ADMPU Area Future Conditions 10-Year, 6-Hour Storm
MV24F10	Maryvale ADMS Area Future Conditions 10-Year, 24-Hour Storm
GP24F10	Glendale/Peoria ADMPU Area Future Conditions 10-Year, 24-Hour Storm

1.0 Introduction

The City of Glendale initiated the Glendale Area Stormwater Management Plan (SMP) to update the current Stormwater Management Plan that was completed in 1986. Numerous changes and improvements to the stormwater drainage system have been completed since 1986. These changes and improvements were developed in the Glendale/Peoria Area Drainage Master Plan and Update (ADMP and ADMPU respectively) and the Maryvale Area Drainage Master Study (ADMS).

1.1 Purpose

As part of the Glendale Area SMP, Kimley-Horn and Associates, Inc. (KHA) updated the hydrology and discharge rates for the Maryvale ADMS and Glendale/Peoria ADMPU. The HEC-1 hydrology models were updated based upon land use changes, new precipitation data, and drainage facilities that have been constructed since the previous studies were completed. The purpose of the hydrology update includes the following:

- Evaluate the 10-year and 100-year, 6-hour and 24-hour storm events for the existing and future conditions for the two watersheds
- Evaluate the existing storm drain system in the City of Glendale
- Provide a planning tool for formulating and analyzing alternatives for the Glendale SMP

This report documents the hydrologic analysis, methodology, results and conclusions of the hydrology update. The report includes subbasin delineation maps, existing and future conditions land use maps, soils maps, and other pertinent hydrologic data and information. The hydrologic models developed as part of the analysis are included in the report appendices.

KHA previously submitted the *Pilot Hydrology Study for Area 1* (Pilot Area 1) and the *Pilot Hydrology Study for Area 2* (Pilot Area 2) to evaluate and recommend the hydrology methodology to be utilized in the Glendale Area SMP hydrology update. These procedures follow the guidelines established in the Flood Control District of Maricopa County's *Drainage Design Manual – Hydrology* (DDM).

1.2 Contact Information

The City of Glendale and the Flood Control District of Maricopa County (FCDMC) are funding this project. The City of Glendale project number is 089017. The contact information for the project manager representing each agency is provided below.

City of Glendale
Wade B. Ansell, P.E., R.L.S.
5850 W. Glendale Avenue, Suite 315
Glendale, AZ 85301

Flood Control District of Maricopa County
Greg Jones, P.E., CFM
2801 W. Durango Street
Phoenix, AZ 85009

Kimley-Horn and Associates, Inc.
David Jensen, P.E., CFM
7878 North 16th Street, Suite 300
Phoenix, AZ 85020

1.3 Location

The Glendale Area SMP consists of two study areas, Maryvale ADMS and Glendale/Peoria ADMPU. The areas are described in the following paragraphs. **Figure 1** is the vicinity map for the entire SMP project area and shows the watershed boundaries.

Maryvale ADMS

The Maryvale ADMS study area encompasses portions of the Cities of Glendale, Phoenix, Peoria, Avondale and Tolleson as well as portions of unincorporated Maricopa County. The study area is bound by the Arizona Canal Diversion Channel (ACDC) and Skunk Creek on the north, Interstate 17 (I-17) on the east, Interstate 10 (I-10) on the south and Loop 101, New River, and Agua Fria River on the west.

Glendale/Peoria ADMPU

The Glendale/Peoria ADMPU study area encompasses Youngtown, Sun City, portions of the Cities of Glendale, Phoenix, Peoria, and Surprise as well as portions of unincorporated Maricopa County. The study area is bound by the mountains near the New River Dam and the Central Arizona Project (CAP) canal to the north, the ACDC to the south, I-17 and New River to the east, and Agua Fria River to the west. It should be noted that the eastern boundary in the Glendale/Peoria ADMPU is 51st Avenue between the ACDC and Loop 101. This study includes a portion of the ACDC ADMS watershed from 51st Avenue to I-17.

1.4 General Description

Maryvale ADMS

The land in the Maryvale ADMS watershed generally slopes from northeast to southwest at a slope of approximately 0.4 percent. Surface water drainage is primarily conveyed south and west in the streets. One major exception to this is along Grand Avenue, which transects the watershed on a diagonal. Grand Avenue parallels the BNSF Railroad alignment, which is typically a barrier to flow. The Grand Canal, which crosses the Maryvale ADMS watershed, also acts as a significant flow barrier.

Figure 1. Project Vicinity Map

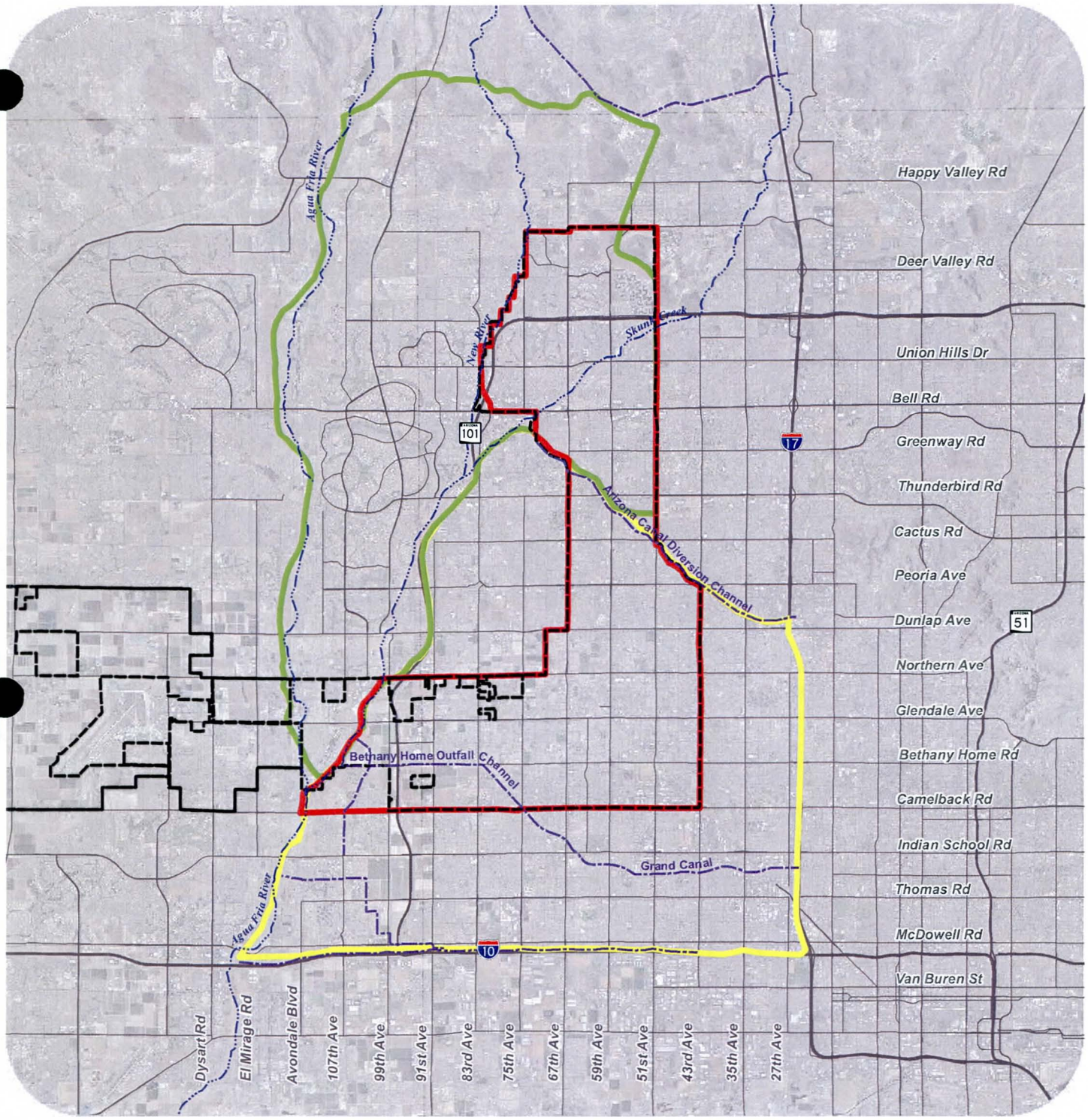

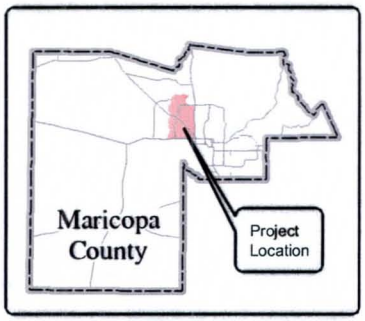

Legend

- Glendale City Limits
- 1986 Glendale Stormwater Master Plan Study Area
- 1997 Maryvale Area Drainage Master Plan Study Area
- 2001 Glendale/Peoria Area Drainage Master Plan Update Study Area

0 1.25 2.5 5 Miles

Kimley-Horn and Associates, Inc.

Skunk Creek and the ACDC are located along the northern boundary of the Maryvale ADMS watershed. The 100-year storm runoff coming from the north will be intercepted by these drainage facilities and conveyed west to New River. The eastern watershed boundary is the I-17 freeway which acts as a drainage barrier for flow coming from the east.

Three regional channels convey flow across the watershed. The I-10 drainage channel intercepts stormwater north of I-10 and conveys flow west to Agua Fria River. The Loop 101 drainage channel is located east of Loop 101 and conveys flow south and west underneath the freeway at several locations to New River and Agua Fria River. The Bethany Home Outfall Channel (BHOC) alleviates flooding north of the Grand Canal and conveys flow from 67th Avenue to the Agua Fria River.

Several regional storm drains also convey flow either south to the I-10 drainage channel or west to New River. Storm drains in the Cities of Glendale and Peoria are described in the *Facility Inventory Report* completed as part of the Glendale SMP and consist of the Cactus Drainage System, the Olive Avenue Drainage System, the Orangewood Drainage System and the Bethany Home Road/Grand Canal Drainage System. These storm drains all convey flow west to New River. City of Phoenix storm drains are located in each north/south mile and half-mile street between I-17 and 43rd Avenue and in each north/south mile street between 43rd Avenue and 91st Avenue. The City of Phoenix storm drains convey flow south to the I-10 drainage channel. **Exhibit 8** in **Appendix J** shows the location of the storm drains in the Maryvale ADMS watershed.

One storm drain was under construction and two were being designed at the time this hydrology report was prepared. The Northern Avenue storm drain is currently under construction and was included as part of the existing conditions model. The Bethany Home storm drain from 71st Avenue to 79th Avenue and the Camelback Road storm drain from 59th Avenue to BHOC are being designed and were included in the future conditions analysis.

Several regional detention/retention basins are located in the Maryvale ADMS watershed. Some of these basins act as surge basins for the storm drains and others are located along the upstream end of Grand Avenue or at other locations to help alleviate ponding. The regional detention basins are shown on **Exhibit 3** in **Appendix J**.

Glendale/Peoria ADMPU

The terrain in the Glendale/Peoria ADMPU watershed is characterized by steep hills draining to milder slopes in the area north of Pinnacle Peak Road. In this northern area there are several natural channels that have not been significantly altered by development. South of Pinnacle Peak Road the land generally slopes to the south and drains to the ACDC, New River or Agua Fria River through man-made channels.

The ACDC, Skunk Creek, New River and Agua Fria River are all downstream boundaries of this model. Flows conveyed in these channels from areas upstream of the

Glendale/Peoria ADMPU watershed have not been modeled. It is not the intention of this report to model the flows in any of these drainage facilities.

There are relatively few existing storm drains in the Glendale/Peoria ADMPU watershed. In the Cities of Glendale and Phoenix, storm drains convey flow south to the ACDC. The City of Phoenix also has a storm drain in Union Hills Drive that conveys flow west to Skunk Creek. Two storm drain systems were identified in the City of Peoria. The Pinnacle Peak storm drain located between 91st Avenue and 83rd Avenue conveys flow east and south to a channel at Williams and 83rd Avenue. There is also a drainage system in Union Hills and Bell Road which conveys flow from 91st Avenue east to New River. **Exhibit 8** in **Appendix J** shows the location of the storm drains in the Glendale/Peoria ADMPU watershed.

Regional detention/retention basins located within the Glendale/Peoria ADMPU watershed help to attenuate flow. These regional basins consist of the Arrowhead Lakes and surge basins associated with storm drains. Although the Arrowhead Lakes are associated with a development, they are considered regional basins because they retain more than the required 100-year, 2-hour storm volume. The regional detention basins are shown on **Exhibit 3** in **Appendix J**.

2.0 Previous Hydrologic Investigations

Previous hydrology studies and investigations were reviewed for historical as well as hydrologic information that could be used in this analysis. Particular attention was given to drainage issues and problems, subbasin delineation, reach routing methods, diversion methods, routing of detention basins, and potential future drainage structures. The following section presents a brief summary of previous relevant investigations that were conducted within the project watersheds.

2.1 Drainage Reports

Several drainage reports were received from the City of Glendale and screened for those that were pertinent to this project. The drainage reports relevant to this study are discussed in this section.

Maryvale Area Drainage Master Study (February 1997). This study was conducted for the FCDMC and the Cities of Glendale, Phoenix, Tolleson, and Avondale to develop a hydrology model and identify flooding issues within the Maryvale ADMS project area. Hydrology models were prepared for the 10-year, 6-hour; 100-year, 6-hour; and the 100-year, 24-hour storm events. Ponding areas were identified along Grand Avenue, the Grand Canal and the Roosevelt Irrigation District canal, as well as along 27th and 35th Avenues. The study also indicated that the I-10 drainage channel may not have capacity for the 100-year storm event near 83rd and 91st Avenues.

Glendale/Peoria Area Drainage Master Plan Update (May 2001). This study was conducted for the FCDMC, the Cities of Glendale, Peoria and several other cities to update the Glendale/Peoria ADMPU area study hydrology. The study was updated for the purposes of developing a hydrology model to identify and quantify flooding issues within the Glendale/Peoria ADMPU project area. A detailed study of the Arrowhead Lakes was included as part of the update.

Glendale/Peoria ADMPU Northwest Region Update (May 2007). This study was conducted for the FCDMC to update the hydrology for the portion of the Glendale/Peoria ADMPU watershed north of Union Hills Road and west of New River. The purpose of the update was to incorporate new developments in the area into the hydrology model. The report was reviewed for subbasin delineations as well as flow paths and diversion data.

Metro Phoenix Area Drainage Master Study/Plan (October 2006). This study was conducted for the FCDMC and the City of Phoenix to develop a hydrology model and identify flooding issues within the Metro Phoenix ADMP project area. It was reviewed for hydrologic methodology.

Determination of Mapping and Flood Zone Changes and Elevation Certifications Technical Data Notebook (September 2008). This report was prepared for the City of Glendale to analyze three floodplain locations along Grand Avenue and one location

along the Grand Canal. It documents the changes that have taken place along Grand Avenue and the Grand Canal to alleviate flooding associated with ponding.

Bethany Home/Grand Canal Flood Control Project (September 2000). This study was conducted in response to flooding issues identified in the Maryvale ADMS. This pre-design study developed a concept for the Bethany Home Outfall Channel between 97th Avenue and 73rd Avenue.

2.2 As-Built Plans

As-built plans for various structures were collected from several agencies, including Arizona Department of Transportation (ADOT), FCDMC, and the Cities of Glendale and Phoenix. Several records were received and reviewed from each agency. For simplicity, individual records that were reviewed are not listed here, but plans are divided and discussed generally by agency.

City of Glendale As-built and Design Plans. The Glendale as-built data consisted of several regional basins located within the City of Glendale and storm drain plans. The plans for the regional basins were used to calculate stage-storage-discharge curves. The design plans for the Northern Avenue storm drain, Bethany Home Road storm drain and Camelback storm drain were obtained to include in the model along with the storm drain data received from the City of Glendale storm drain database.

ADOT As-built Plans. ADOT as-built plans were obtained to review the drainage structures along Loop 101, I-10 and Grand Avenue. The geometry and slope of the Loop 101 drainage channel was taken from these records. The plans for the I-10 drainage channel were reviewed to confirm the geometry used in the Maryvale ADMS. Stage-storage-discharge data was also calculated for several ADOT basins along Grand Avenue using the as-built grading plans.

FCDMC As-built Plans. These plans include the Bethany Home Outfall Channel plans and several storm drain plans, including the Northern/Orangewood storm drain and the Pinnacle Peak storm drain. These plans contained storm drain and regional basin data that were input into the models.

City of Phoenix As-built Plans. These plans include grading plans for the Maryvale Ballpark, Sunset Basin, and Verde basin. Stage-storage-discharge data was calculated from this as-built data.

3.0 Nomenclature

The naming conventions for subbasins, routing reaches, diversions and combination points are based on the intersection that each modeling operation is draining towards. This intersection could be the intersection of two streets, a street intersecting a river or wash, or a street intersecting a large structure such as the Grand Canal. The first two characters of each subbasin name refer to the east/west boundary (street, channel or structure) that the subbasin drains towards. The second two characters are designated based on the name for the north/south boundary (street, channel or structure). The north/south streets that have three digits will only be designated by the last two digits. For example, the subbasin that drains to Bell Road and 115th Avenue will be identified as BL15. See **Table 1** for the two letter abbreviation associated with each boundary.

Table 1. Boundary Abbreviations

Boundary Name	Abbr.	Boundary Name	Abbr.	Boundary Name	Abbr.
101st Avenue	01	97th Avenue	97	Jomax Road	JM
103rd Avenue	03	99th Avenue	99	Lake Pleasant Boulevard	LP
107th Avenue	07	ACDC	AC	Loop 101	LO
111th Avenue	11	Acoma Drive	AM	McDowell Road	MD
114th Avenue	14	Agua Fria River	AF	Meade Drive	ME
115th Avenue	15	Athens Street	AT	Mitchell Drive	ML
27th Avenue	27	Avondale Boulevard	AV	Mountain View Road	MV
35th Avenue	35	Beardsley Road	BY	New River	NR
43rd Avenue	43	Bell Road	BL	Northern Avenue	NO
51st Avenue	51	Bethany Home Road	BH	Olive Avenue	OL
53rd Avenue	53	Black Rock Boulevard	BR	Orangewood Avenue	OW
55th Avenue	55	Brown Street	BR	Peoria Avenue	PE
56th Avenue	56	Burns Drive	BN	Pinnacle Peak Road	PP
57th Avenue	57	Cactus Road	CT	Rock Springs Wash	RS
59th Avenue	59	Calle Lejos	CL	Roosevelt Irrigation	RI
67th Avenue	67	Camelback Road	CB	Rose Garden Lane	RG
73rd Avenue	73	Deer Valley Road	DV	Royal Oak Road	RO
75th Avenue	75	Del Webb Boulevard	DW	Skunk Creek	SK
76th Avenue	76	Glen Harbor Boulevard	GH	Talisman Road	TL
77th Avenue	77	Glendale Avenue	GL	Thomas Road	TM
80th Avenue	80	Grand Avenue	GR	Thunderbird Road	TB
81st Avenue	81	Grand Canal	GC	Union Hills Drive	UH
83rd Avenue	83	Greenway Road	GW	Van Buren Street	VB
87th Avenue	87	Happy Valley Road	HV	Westwing Parkway	WW
91st Avenue	91	Indian School Road	IS	Williams Road	WL
93rd Avenue	93	Interstate 10	IN	Yearling Road	YL

A one or two letter prefix before the intersection identification (e.g. BL15) indicates the type of modeling operation to be performed. For routes and diversions associated with storm drains, the first street in the identification indicates the street where the storm drain is located. For example, RPNO59 indicates that the storm drain is in Northern Avenue,

while RP27CB indicates that the storm drain is in 27th Avenue. The type of modeling operation indicated by each prefix is identified in **Table 2**.

Table 2. Prefixes for Modeling Operations

Prefix	Type of Modeling Operation
RW	Routing flow in the west direction
RS	Routing flow in the south direction
RP	Routing storm drain pipe flow
R	Routing flow (no direction is specified)
C	Combination point for surface flow
CI	Combination point for flow combining at an intersection
CP	Combination point for pipe flow with surface flow
SR	Storage routing for regional detention/retention basins
ER	Retention for existing developments (based on NOAA Atlas 2)
FR	Retention for future developments (based on NOAA 14)
X	Existing or future retention diversion does not return to model
DW	Divert surface flow to the west
DE	Divert flow to the east
DS	Divert surface flow to the south
DN	Divert flow to the north
DR	Divert retrieval from surface flow
D	Divert surface flow (flow that remains after storm drain divert)
DI	Divert retrieval from intersection flow
DP	Divert flow to a storm drain pipe
PR	Divert retrieval from a storm drain pipe

4.0 Hydrologic Parameters

4.1 General Model Description

The hydrologic modeling was conducted using the U.S. Army Corps of Engineers (USACE) HEC-1 modeling software. The model input parameters were prepared using the FCDMC Drainage Design Management System for Windows, version 4.1.9 (DDMSW). The existing and future conditions HEC-1 schematics are shown on **Exhibit 1**and **Exhibit 2** in **Appendix J**.

Maryvale ADMS

The runoff generated in a subbasin under natural (undeveloped) conditions typically converges to a single point. However, due to the nature of urban hydrology, where stormwater is conveyed along a network of streets, runoff may leave the subbasin at any point along the subbasin boundary through street flow. Typically, in the Maryvale ADMS study area the concentration point is represented by the south and west subbasin boundaries.

In general, the flow generated in a subbasin is combined with the surface flow routed from the north and the west. This combined surface flow is combined with the upstream storm drain flow. From the combined surface water and storm drain flow, the capacity of the storm drain is diverted and routed separately. The remaining surface flow is diverted either south or west and combined with flow generated in the downstream subbasin. A typical schematic of the routing and diversions associated with one subbasin is shown in **Figure 2**.

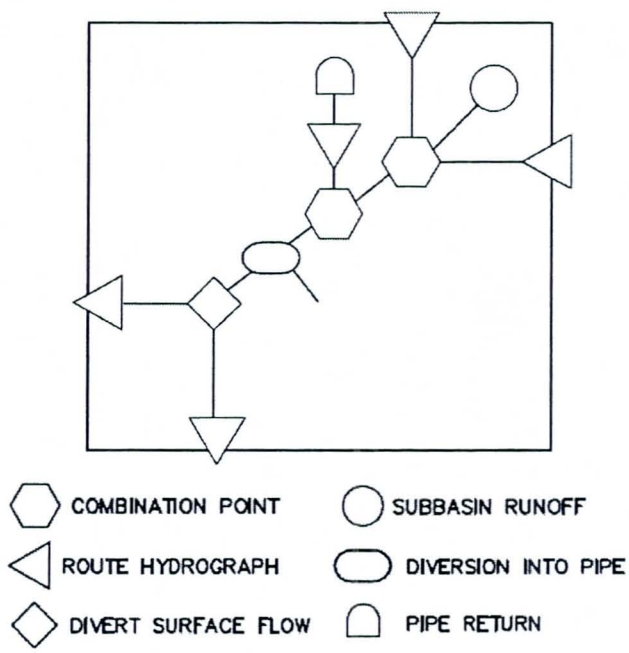

Figure 2. Typical Maryvale ADMS Watershed Subbasin Schematic

Glendale/Peoria ADMPU

The portion of the Glendale/Peoria ADMPU project area south of Skunk Creek is typically urban with stormwater conveyed along a network of streets. In these urban areas the model is arranged similar to the Maryvale ADMS study area as shown in **Figure 2**.

The remainder of the Glendale/Peoria ADMPU project area conveys stormwater in a combination of channels and streets that act as channels. In this area the flow from one subbasin is typically routed downstream in one direction.

4.2 Rainfall Data

National Oceanic and Atmospheric Administration (NOAA) 14 was utilized to obtain the rainfall data. The NOAA 14 rainfall depths are less than the NOAA Atlas 2 rainfall depths used in the current Maryvale ADMS and Glendale/Peoria ADMPU. The NOAA 14 data was obtained from the NOAA 14 Index Map included with the DDMSW software. The NOAA 14 rainfall data is located in **Appendix A**. The rainfall depths were reduced using depth-area reduction factors.

4.3 Topographic Mapping

The topography for the study area was obtained from the FCDMC and consisted of topographic data files collected from several different projects ranging in date from 1987 to 2005. This topography includes data with two-, four- and ten-foot contour intervals. **Figure 3** shows the areas covered by different topographic sources and the dates of the mapping.

Figure 3. FCDMC Mapping Sources

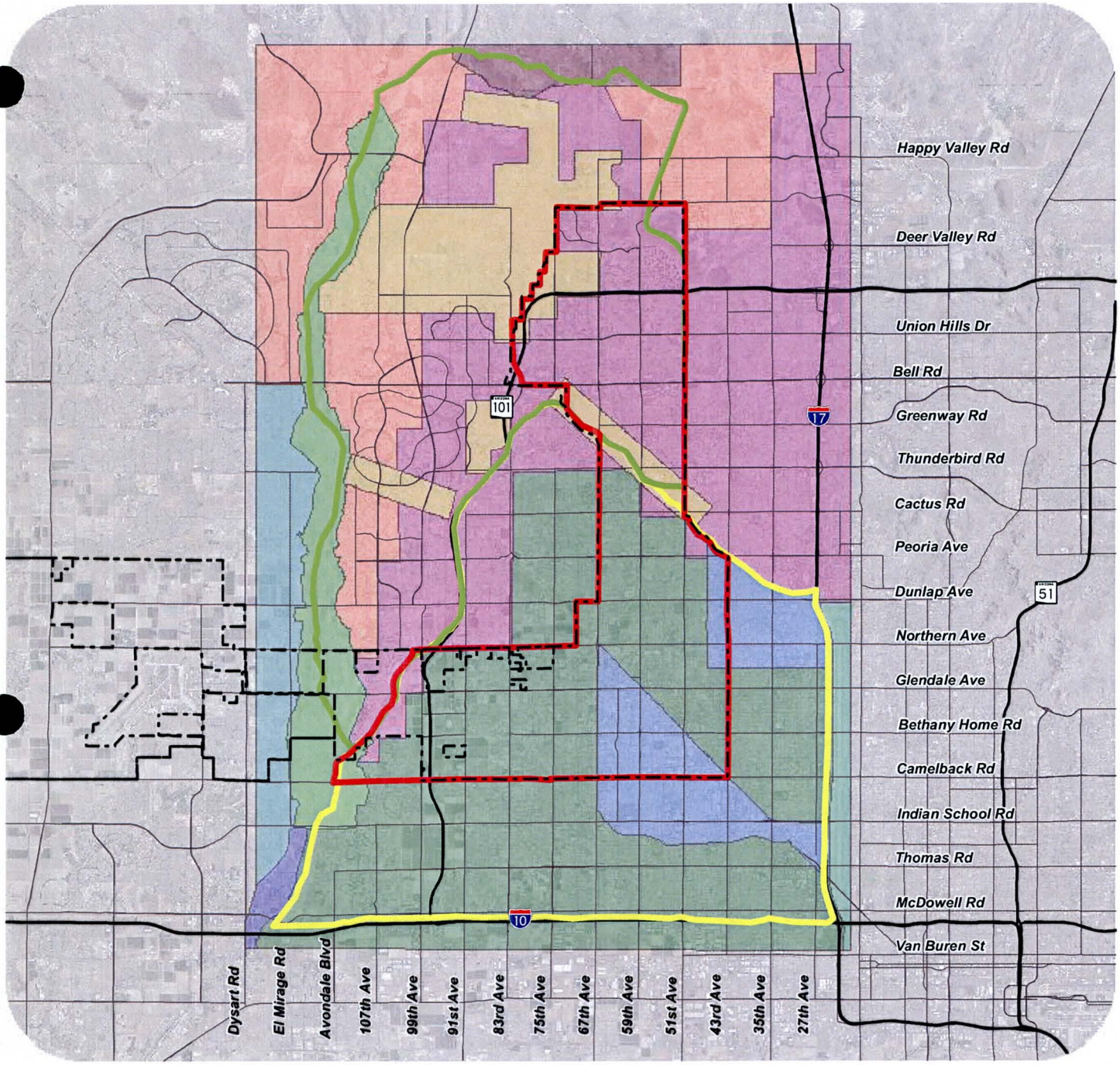

0 1 2 4
Miles

FCDMC Mapping Sources

- Agua Fria River FDS Re-Study (7/22/1987), 4ft Contours
- Agua Fria River Mapping (2/26/1995), 2 ft Contours
- Arizona Canal Diversion Channel ADMS (8/2/1991), 2 ft Contours
- Countywide 10 Foot Contour Mapping (12/16/2000), 10 ft Contours
- Glendale/Peoria Mapping (1/10/2000), 2 ft Contours
- Maryvale ADMS (3/28/1994), 1 ft Contours
- Maryvale ADMS (3/28/1994), 2 ft Contours
- Metro ADMS (5/15/1998), 2 ft Contours
- New River Mapping (4/10/2003), 2 ft Contours
- White Tanks - Agua Fria ADMS (2/10/1990), 2 ft Contours

Legend

- Glendale City Limits
- 2001 Glendale/Peoria Area Drainage Master Plan Update Study Area
- 1997 Maryvale Area Drainage Master Plan Study Area
- 1986 Glendale Stormwater Master Plan Study Area

Kimley-Horn and Associates, Inc.

4.4 Subbasin Delineation

Maryvale ADMS

Subbasin boundaries within the Maryvale ADMS project area are typically defined by the mile streets. The area of each subbasin in this area is approximately one square mile. The total area included in the Maryvale ADMS watershed is 96 square miles for a total of 148 subbasins. These areas are approximately the same as those delineated in the 1997 Maryvale ADMS.

Glendale/Peoria ADMPU

To keep the Glendale/Peoria ADMPU hydrology model consistent with the Maryvale ADMS hydrology model, where possible, subbasins were delineated to create approximate one square mile areas. Some subbasins were further subdivided due to topography. Subbasin delineations were based on major streets, topography, and 2009 aerial orthophotography obtained from FCDMC. The subbasin delineations were also compared with the Glendale/Peoria ADMPU and Northwest Region Update subbasin delineations. The subbasin boundaries of all three models are similar, although the subbasins delineated in this hydrology update are typically larger and encompass multiple subbasins from the previous studies. The total area included in the Glendale/Peoria ADMPU watershed is approximately 100 square miles with a total of 158 subbasins. The subbasin delineations are located on **Exhibit 3** in **Appendix J**.

4.5 Flow paths and Times of Concentration

The time of concentration was determined using the Papadakis and Kazan equation per the DDM. The calculation is based on the flowpath length, subbasin slope, watershed resistance coefficient (K_b) and the average rainfall excess intensity. DDMSW was utilized to calculate the time of concentration for each subbasin.

The selection of the K_b value used in the time of concentration calculation can be subjective. For consistency, Figure 5.5 in the DDM provides K_b values based on watershed size and classification. A composite K_b value is computed for each subbasin in DDMSW according to the land use. According to Table 5.3 in the DDM, residential areas are typically assigned a K_b value of Type A. These applications are intended for small developments where flowpaths may run directly from roofs to streets. Based on discussions with the FCDMC, it is appropriate for large master plan areas to represent residential areas with higher roughness coefficients due to the impact of landscaping, walls, and buildings in proportion to lot sizes.

The K_b values used in the Maryvale ADMS, the Glendale/Peoria ADMPU and the Northwest Region Update were reviewed for this analysis. The Maryvale ADMS used K_b values of Type C for residential areas while the Glendale/Peoria ADMPU and Northwest Region Update assigned the K_b value to Type B for residential areas. Based on engineering judgment, input from FCDMC, field observations, and model calibration, the K_b values for this study were set to Type C for all residential areas within the project area.

Maryvale ADMS

In the Maryvale ADMS project area it is assumed that the runoff for each subbasin will flow along the streets. The watershed generally flows in a south and west direction. The length of the flowpath is approximately the length of the subbasin plus the width of the subbasin or approximately two miles.

The slope of the subbasin was assumed to be the slope of the flowpath. Elevations were obtained from contour data provided by the FCDMC. Two-foot topography was available for the entire Maryvale ADMS project area.

Glendale/Peoria ADMPU

Flowpaths in the Glendale/Peoria ADMPU project area were delineated based on a combination of the composite topography and the 2009 aerial orthophotography. It is assumed the runoff for each subbasin will be conveyed in drainage channels where present. In some subbasins the flow is directed in several channels to the downstream subbasin. In these subbasins the longest flowpath was used as the representative flowpath for the subbasin. In some areas, flowpaths transition from sheet flow to channel flow in developed areas. Where flowpaths travel through developed areas, the 2009 aerial orthophotography was used to delineate the flowpath through drainage channels or in streets. Flowpath delineations are located on **Exhibit 3** in **Appendix J**.

The slope of the subbasin was assumed to be the slope of the flowpath. Elevations were obtained from the composite two-foot, four-foot, and ten-foot contour data provided by the FCDMC. In locations where two-foot contour data was not available, four-foot and ten-foot contour data was used. For consistency, the upstream and downstream elevations of each flowpath were obtained from the same topographic source.

There were a few cases where a subbasin included mountainous regions as well as relatively flat, developed areas. To estimate a more accurate subbasin slope and to eliminate unreasonable runoff quantities for these subbasins, an average slope was calculated and used in the time of concentration calculations. The procedures followed for calculating an average subbasin slope are in the *Standards Manual for Drainage Design and Floodplain Management in Tucson, Arizona*. The adjusted slope calculations are located in **Appendix B**.

4.6 Land Use

Land use was obtained from the City of Glendale and the City of Phoenix General Plan GIS shapefiles. Maricopa Association of Governments (MAG) 2007 general plan and future land use shapefiles were obtained from the FCDMC and used in areas outside of these municipalities.

Land use data is typically based on zoning or general planning information. Each municipality may have different zoning or planning categories for the same type of land use. Land use descriptions for each municipality were related to a MAG land use category for use in DDMSW. The comparison of City of Glendale and City of Phoenix

land use descriptions with the associated MAG land use descriptions is located in **Appendix C**.

Existing and future conditions land use files obtained from municipalities and MAG were reviewed with 2009 orthophotography obtained from the FCDMC. Revisions were made to the existing land use data for discrepancies with areas larger than 160 acres. It is assumed that in the future, all currently empty lots will be built out according to the future conditions land use. **Appendix A** provides the general land use parameters as well as the land use for each subbasin. The existing and future land use maps for the project area are provided on **Exhibit 4** and **Exhibit 5** in **Appendix J**.

4.7 Soils

GIS shapefiles were obtained from the FCDMC. The soils in the project area are from the SCS Soil Studies *Aguila-Carefree Area, Part of Maricopa and Pinal Counties, Arizona* and *Maricopa County, Arizona, Central Part*. This data was uploaded directly into DDMSW for analysis. The soil data for each subbasin is located in **Appendix A**. The Soils Map is shown on **Exhibit 6** in **Appendix J**.

4.8 Rainfall Loss Parameters

The Green and Ampt method was used to estimate rainfall losses. The procedures are outlined in the DDM. Use of the Green and Ampt method requires the estimation of five parameters for each subbasin: initial loss (IA), saturated hydraulic conductivity (XKSAT), volumetric soil moisture deficit (DTHETA), average wetting front suction (PSIF), and effective impervious area (RTIMP). Default values for each of these parameters are provided in DDMSW for each land use and soil type. The default values were evaluated and revised in accordance with the actual watershed characteristics. In general, the vegetative cover was decreased by comparing land use types with the aerial orthophotography. RTIMP and IA values were also evaluated for each land use type. The values for IA are consistent with those in Table 4.2 of the DDM. The DTHETA values for "normal" moisture conditions were used in most areas, as is consistent with irrigated or watered areas. In areas of vacant land and passive open space which includes mountain preserves and washes, the DTHETA value for "dry" moisture conditions was utilized. **Appendix A** provides the general land use parameters.

4.9 Retention

Retention was modeled by diverting 80% of the 100-year, 2-hour volume out of the model for areas constructed after 1990 when the retention requirement was adopted by the City of Glendale. The procedure for calculating volume, as outlined in the DDM, requires a runoff coefficient (C), rainfall depth, and drainage area. It was assumed that the retention was 80% of the design capacity. Runoff coefficients for MAG land use classifications are provided in Table 6.3 of the *Maricopa County Drainage Policies and Standards Manual*. These values were reviewed and applied to the land use classifications in this study.

The rainfall depths for the existing conditions retention calculations were obtained from the NOAA Atlas 2 isopluvial map in the DDM. NOAA Atlas 2 was the required source for rainfall depths when the existing retention basins were designed. The rainfall depths for the future conditions models were obtained from the NOAA 14 data in DDMSW. It is presumed that future retention basins will be developed based on NOAA 14. Drainage areas are based on land use type and apply only to developed areas. Several developed areas were excluded from the retention calculations and are explained in further detail below. The retention calculations are provided in **Appendix D**.

Areas developed after 1990 were required to retain the 100-year, 2-hour volume on-site. However, there are several developments built prior to 1990 in the project area that did not need to meet these requirements. Because of this discrepancy in retention requirements, developed areas were divided into pre-1990 and post-1990 areas. Areas developed prior to 1990 were not modeled with retention. Both watersheds include areas that were developed after 1990, and retention is provided in the hydrology models based on the 100-year, 2-hour requirement.

It is common for developments located along a major watercourse to be waived from meeting the 100-year, 2-hour retention requirement, provided that post-development discharges do not exceed pre-development levels and that first flush requirements are met. It was assumed that developments located along Agua Fria River, New River, Skunk Creek, Bethany Home Outfall Channel and the ACDC did not retain the full 100-year, 2-hour volume. Retention is also not required for individual residential parcels greater than one acre in area. Retention was not modeled for these developments.

Additionally, the Arrowhead Lakes, located north of Loop 101 and east of 75th Avenue, are modeled as regional basins. Because the retention was modeled with storage routing, additional retention was not modeled for the developments that drain to the Arrowhead Lakes. **Exhibit 7** in **Appendix J** identifies the pre-1990 developments, the post-1990 existing developments where retention is being modeled, and the area where it is anticipated that retention will be required in the future.

4.10 Storage Routing

The HEC-1 level-pool storage routing routine was used to route through regional detention basins as well as ponding areas along significant drainage barriers. Regional detention basins were defined as surge basins used in conjunction with storm drains or basins that retain more than local subdivision drainage. Local subdivision retention is accounted for in the model and is described in further detail in **Section 4.9**.

Maryvale ADMS

Several ponding areas exist in the Maryvale ADMS project area along Grand Avenue, the Grand Canal and the Roosevelt Irrigation District canal. Stage-storage-discharge information was obtained for these ponding areas from the Maryvale ADMS hydrology model as well as from HEC-1 models that were updated with the Bethany Home Outfall Channel data and with ponding along the Grand Canal. The HEC-1 model that included

the most recent information for each ponding area was used. This information was reviewed by comparing against the composite topographic data and 2009 aerial orthophotography.

As-built drawings were available for most of the regional detention basins in the Maryvale ADMS study area. The stage, area, outlet, and spillway information from the as-built drawings were input into a spreadsheet to calculate volume and discharge at each stage.

If as-built records were not available, the storage routing data for the detention basins were determined from the composite two-foot topographic data provided by the FCDMC. The stage-area information obtained from the topography is not as precise as information from as-builts, however, it is adequate to model attenuation for this study. Storm drain information was determined from GIS storm drain databases received from the Cities of Glendale, Phoenix, and Peoria.

The regional detention basins that were included in the Maryvale ADMS hydrology model are presented in **Table 3** and can be located on **Exhibit 3** in **Appendix J**. See **Appendix E** for the stage-storage worksheets.

Table 3. Maryvale ADMS Regional Detention Basins.

Basin ID	Data Source	Basin Name	Location
SRPE67	As-built	Sunnyside Park	63rd Ave and Cholla Ave
SRBR63	As-built	Sahuaro Ranch Park	63rd Ave and Brown St
SR67MV	As-built	Chaparral Ranch Detention Basin	67th Ave and Mountain View Rd
SROL71	Topography		71st Ave and Olive Ave
SROL83	Topography		83rd Ave and Olive Ave
SRNO59	As-built	Butler Park Retention Basins	57th Ave north of Butler Dr
SRGR75	As-built	ADOT basin along Grand Avenue	75th Ave and Grand Ave
SRNO91	As-built	Peoria Basin (surge basin for Northern and Butler Storm Drain)	85th Ave and Northern Ave
SRBH51	Topography	Maryland Lakes Park Basin and Rose Lane Park Detention Basin	47th Ave and Marlette Ave 51st Ave and Marlette Ave
SRGR67	As-built	East Basin (surge basin for Orangewood Avenue Storm Drain)	63rd Ave and Grand Ave
SROW75	As-built	West Basin (surge basin for Orangewood Avenue Storm Drain)	69th Ave and Orangewood Ave
SRGR43	HEC-1 model	ADOT basins along Grand Avenue	43rd Ave and Grand Ave
SRISGC	As-built	Sunset Basin	Grand Canal and Indian School Rd
SRGC75	As-built	Bethany Home Outfall Channel	Along the Grand Canal between 67th Ave and 75th Ave
SRGC53	As-built	Maryvale Baseball Park	51st Ave and the Grand Canal
SRTM27	Final Plans	Verde Basin	26th Ave and Thomas Rd
SRGR27	As-built	ADOT basin along Grand Avenue	27th Ave and Grand Ave
SRINLO	As-built	ADOT basin along I-10 and L101	Interstate-10 and Loop 101

Glendale/Peoria ADMPU

As-built records were available for the 59th Avenue detention basin. The stage, area, outlet, and spillway information from the as-built drawings were input into a spreadsheet to calculate volume and discharge at each stage.

No information could be located for the Desert Amethyst Basin. Data for this regional basin was taken directly from the Glendale/Peoria ADMPU.

Stage-storage-discharge data was provided in drainage reports or hydrology reports for the remainder of the regional detention basins. Stage-storage data for most of the Arrowhead Lakes were combined into one stage-storage-discharge record for each subbasin. Because elevations varied widely throughout the subbasin, volumes were combined by summing the volume at similar depths for each lake. Discharge values were only used for the most downstream lakes. The attenuation from these combined storage routes were compared with the attenuation from the Glendale/Peoria ADMPU. See **Section 5.5** for more detailed discussion of the Arrowhead Lakes.

The regional detention basins that were included in the Glendale/Peoria ADMPU hydrology model are presented in **Table 4** and are located on **Exhibit 3** in **Appendix J**. See **Appendix E** for the stage-storage worksheets.

Table 4. Glendale/Peoria ADMPU Regional Detention Basins.

Basin ID	Data Source	Basin Name	Location
SRAM59	As-built	Surge basin for 59th Ave storm drain	59th Ave and Acoma Dr
SRPP87	Report	Surge basin for storm drain	87th Ave and Avenida del Sol
SRPP83	Report	Surge basin for storm drain	83rd Ave and Pinnacle Peak Rd
SRAT91	Model	Desert Amethyst Detention Basin	91st Ave and Athens St
SRDV56	Report	Arrowhead Lake 1	
SRLO51	Report	Arrowhead Lakes 2 thru 5	
SRDV67	Report	Arrowhead Lakes 6, 7, 11, 12, and 13	
SRLO67	Report	Arrowhead Lakes 8 thru 10 and 14 thru 21	
SRLO75	Report	Arrowhead Lakes L21AP1 thru L21AP5	

4.11 Channel Routing

Channel routing was conducted using two different methods. Those methods were the Kinematic Wave routine for routing the flow through storm drains and the Modified Puls (Normal Depth) routine for overland flow.

The Kinematic Wave method allows a circular pipe shape to be defined. The slope and diameter of the pipe were taken from the GIS storm drain databases received from the Cities of Glendale, Phoenix, and Peoria. When slopes were not provided, the slope of the ground was used as an approximation of the storm drain slope. A storm drain was

considered existing if it was either already constructed or under construction at the time of this study. Because of this, some storm drains were modeled that were not provided in the GIS databases. The information for these storm drains was obtained from as-built plans or design plans. While there may be several storm drain alignments planned for the future, only future storm drains with actual design plans were included in the future conditions model. Future planned storm drains that have not been designed were not included in the model. Slopes and diameters of future storm drains were obtained from the design plans. The locations of the pipe routing reaches are shown on **Exhibit 8** in **Appendix J**.

The normal depth routing method allows the definition of an eight-point representative cross section for the routing reach with overbank and main channel roughness values. The cross section geometry is based on the type of channel routing. A discussion of the types of channel routing is included below in the section for each model.

The roughness coefficients were selected based on the channel material. The roughness coefficients are provided in **Table 5**. The overbank roughness coefficient for street routing is less than the overbank roughness coefficients for natural channels. This is because the street overbank represents the street right-of-way, which typically has fewer obstructions than the overbanks of natural channels.

Table 5. Roughness Coefficients.

Material	Channel	Overbank	Description
Asphalt	0.015	0.035	Street routing
Concrete	0.015	0.045	Channel routing
Bare soil	0.020	0.045	Channel routing, no vegetation
Natural ground	0.035	0.045	Channel routing, vegetation present

Channel slopes for the normal depth routing method were calculated using the length of the routing reach and upstream and downstream elevation using the composite topographic data provided by the FCDMC. For consistency, the upstream and downstream elevations of each routing reach were obtained from the same topographic source. The Subbasin Delineation Map, **Exhibit 3** in **Appendix J**, shows the location of the routing reaches.

Two types of overland flow routing were identified in the project area. These types are composite street routing and single street or channel routing. Single street or channel routing uses a typical street or channel section to route the flow downstream.

Composite street routing is used where the area is typically urban with multiple streets acting as conveyance channels. In these urban areas water may flow along several of the streets concurrently. A composite cross-section was developed to represent all of the streets conveying flow in the same direction through a subbasin. This means that a typical subbasin has a composite street section routing flow to the west and a composite street section routing flow to the south.

Each street was categorized as either arterial, collector, or local. For the purposes of this study, the mile streets are designated as arterials, the half-mile streets as collectors, and all other streets are local streets. For areas within the City of Glendale, typical street sections were based on the City of Glendale typical streets sections. For all areas outside of the City of Glendale limits, typical street sections were created based on an average geometry of typical street sections from the City of Phoenix and the City of Peoria. **Appendix F** provides the typical channel and street sections utilized for each channel size and street designation referenced above.

The width of the main channel portion of the eight-point cross section was based on the composite widths of the streets in a single direction. The left and right overbanks extended to the composite limits of the right-of-way at a slope of 1%. The length of the routing reach was the length of the subbasin, or one mile. Slopes were estimated along the arterial street. **Appendix G** provides calculations for the composite street widths and slopes.

Maryvale ADMS

Normal depth routing in the Maryvale ADMS project area was generally modeled with composite street routing. The exceptions to this routing method were along three major channels: the Bethany Home Outfall Channel, the Loop 101 drainage channel and the I-10 drainage channel. The cross sections and slopes of these routing reaches were obtained from as-built plans.

Glendale/Peoria ADMPU

The portion of the Glendale/Peoria ADMPU project south of Skunk Creek is typically urban with the streets acting as conveyance channels. Normal depth routing in these areas was modeled with composite street routing.

The remainder of the Glendale/Peoria ADMPU project area typically conveys the flow in channels or in single streets which act as channels. Some channel cross sections were obtained from measured sections in the Glendale/Peoria ADMPU and the Northwest Region Update. These measured channels include Rock Springs Wash and some smaller drainage channels along arterial streets. For all other channels, four typical channel sizes were created to represent various channel cross sections. Channel sizes were assigned to routing reaches based on 2009 aerial orthophotography and field observation. In locations where a street acts as a channel for the routing reach, cross sections are based on the street designation as described for composite street routing. **Appendix F** provides the typical channel and street sections utilized for each channel size and street designation referenced above.

It should be noted that there is no routing in New River, Agua Fria River, Skunk Creek or the ACDC. These drainage channels are considered the downstream boundary of the Glendale/Peoria ADMPU watershed because flows conveyed in these channels from areas upstream of the Glendale/Peoria ADMPU watershed have not been included in the hydrology model. "Dummy" combines have been included along New River, Agua Fria

River, Skunk Creek and the ACDC for modeling purposes only. These values should not be used as flows in the channels.

4.12 Diversions

Two primary types of diversions were utilized in the study: storm drain diversions and surface flow diversions. Several methods were used to determine the surface flow diversions, including multiple street diversions, single street intersection diversions, parallel street diversions, topographic diversions, and channel capacity diversions. Calculations for the diversions are located in **Appendix G**. These methods are explained in greater detail below.

4.12.1 Storm Drain Diversions

The storm drain diversions divert the full flow capacity of the storm drain away from the surface flow. Full flow capacities were estimated based on the slope and the diameter of the pipe. Slopes and diameters were determined from the GIS storm drain databases received from the Cities of Glendale, Phoenix, and Peoria.

Storm drain flow was accounted for at each subbasin located adjacent to a storm drain system with a diameter of 24 inches or greater. Storm drains completely contained within a subbasin were not modeled. After each subbasin hydrograph, the full flow capacity of the pipe was diverted into the storm drain. To better facilitate tracking flow in the storm drain, it was retrieved after each combination point. The storm drain retrieval was combined with the surface flow at the next downstream point and then the full flow capacity of the pipe was diverted back into the storm drain at that location.

4.12.2 Multiple Street Diversions

Multiple street diversions occur in urban areas where the streets act as conveyance channels. In these urban areas water may split off from the main flow at several locations along the subbasin boundary. This flow pattern is typical for most of the Maryvale ADMS watershed and the portion of the Glendale/Peoria ADMPU watershed north of the ACDC and east of Skunk Creek.

These diversions take place after a subbasin combination to estimate how much of the runoff will flow south and how much will flow west for each one-square mile area. The diversion is a constant ratio based on normal depth calculations using Manning's equation. The ratio is based on the composite widths and the slope of the north/south streets compared to the composite widths and the slope of the east/west streets.

Similar to composite street routing reaches, the streets utilized in the diversion calculations were categorized as arterial, collector, or local. **Appendix F** provides the typical sections utilized for each street designation referenced above. A more detailed explanation can be found in **Appendix G**.

Maryvale ADMS

The multiple street diversions along the Grand Canal were modified slightly. Elevated banks along the Grand Canal prevent flow from being conveyed south until the elevation of the banks is exceeded. Diversion records used in the Maryvale ADMS were reviewed and confirmed with the composite topography obtained for the study area. Those diversion records were incorporated into this study model.

4.12.3 Single Street Intersection Diversions

Most of the subbasins in the Glendale/Peoria ADMPU watershed are not square mile subbasins. Single street intersection diversions are used in these areas to account for flow splits. Single street diversions take place after a subbasin combination to estimate how much of the runoff will flow south and how much will flow west. This diversion is similar to the multiple street diversions except flow is split between one east/west street and one north/south street rather than a composite of multiple streets in each direction. The diversion is a constant ratio based on normal depth calculations using Manning's equation. The ratio is based on the width and the slope of the north/south street compared to the width and the slope of the east/west street. The ratios are the same as the ratios derived above for the multiple street diversions. See **Appendix F** for the typical sections utilized for each street designation.

4.12.4 Parallel Street Diversions

Maryvale ADMS

The parallel street diversion always occurs after a multiple street diversion in the Maryvale ADMS watershed. The multiple street diversion splits the flow to the south and west. The parallel street diversion estimates how much of the flow in one direction will be directed down the arterial street and how much will be directed down the collector and local streets. This occurs near Grand Avenue because the arterial street directs the flow to a different subbasin than the collector and local streets. This split is shown below in **Figure 4**.

The diversion is a constant ratio based on the width of the arterial street compared to the composite width of the local and collector streets. It is assumed that the slope of the collector and local streets are similar to the slope of the arterial street and, so the effect of the slope will be negligible.

Similar to composite street routing reaches and other diversions that occur along streets, the streets utilized in these diversion calculations were categorized as arterial, collector, or local. **Appendix F** provides the typical sections utilized for each street designation referenced above.

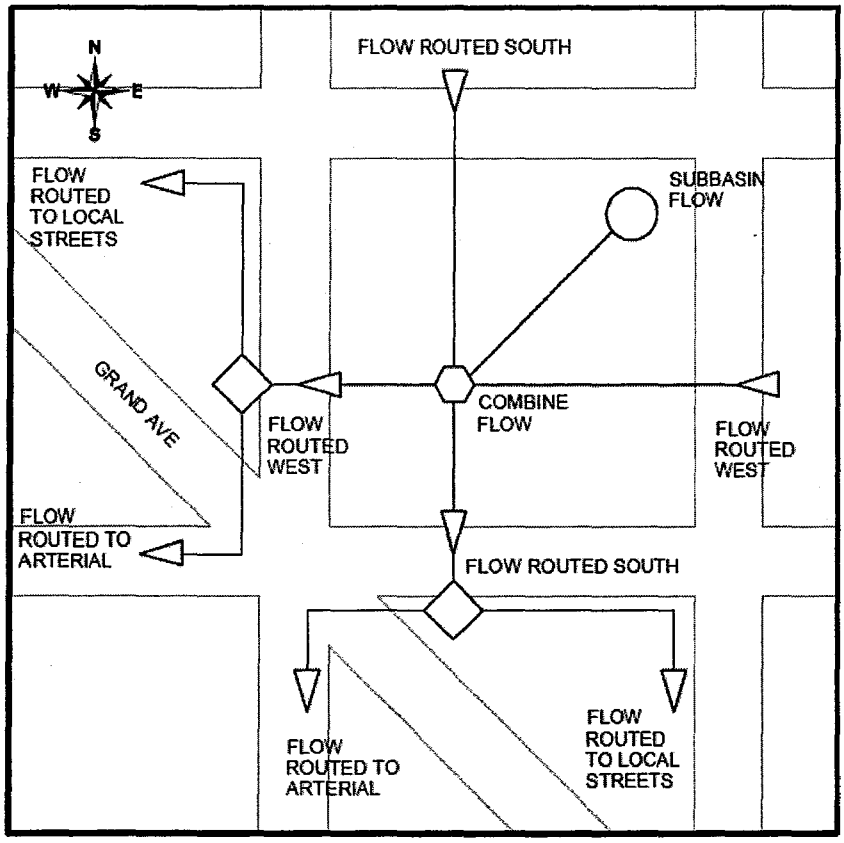

Figure 4. Typical Parallel Street Diversion within the Maryvale ADMS Watershed.

Glendale/Peoria ADMPU

The parallel street diversions within the Glendale/Peoria ADMPU watershed are similar to the parallel street diversions that occur within the Maryvale ADMS watershed, except that this diversion may be between two single streets or a composite of parallel streets. This split is shown below in **Figure 5**. The diversion is a constant ratio based on the composite width of the streets in one subbasin compared to the composite width of the streets in the other subbasin. Slope is not included in the ratio because it is assumed that the difference in slope is negligible.

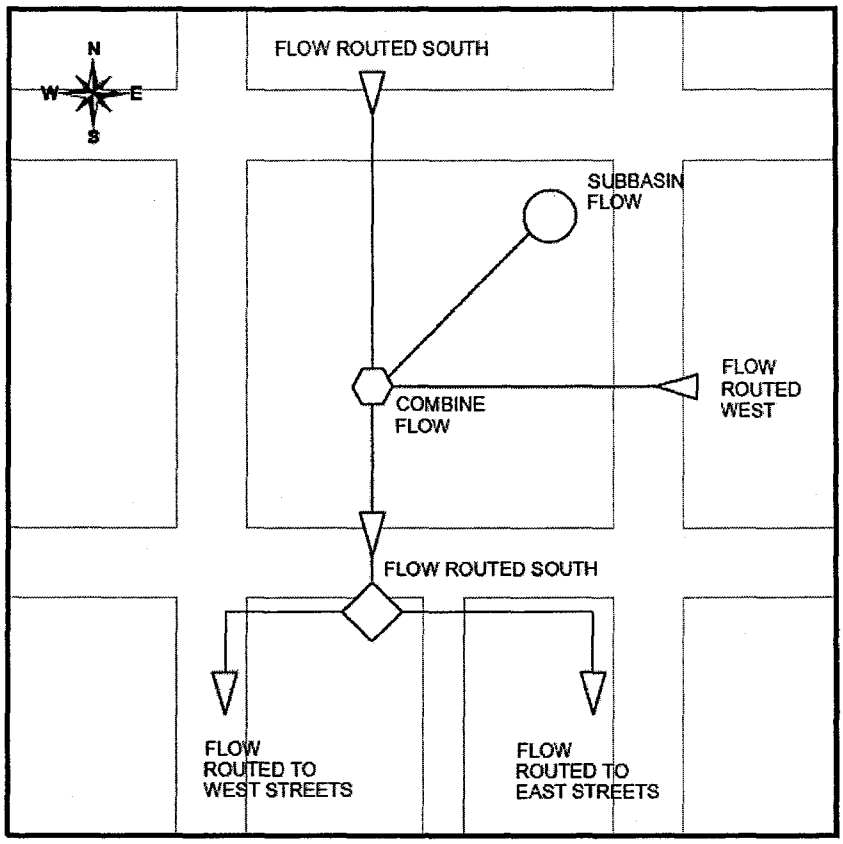

Figure 5. Typical Parallel Street Diversion within the Glendale/Peoria ADMPU Watershed.

4.12.5 Topographic Diversions

There are relatively few instances where the flow in a subbasin was split based on topography rather than on the streets. Diversions were used to avoid creating several small subbasins. This consideration is consistent with the intent of a large master plan study. The divisions were based on a combination of topography and 2009 aerial orthophotography.

4.12.6 Channel Capacity Diversions

Maryvale ADMS

There are two freeway systems in the Maryvale ADMS study area which have large drainage channels. The drainage channel for I-10 directs flow west to the Agua Fria River. Flow that exceeds the capacity of the channel is diverted to the south and out of the model, consistent with the topography of the area. The drainage channel for Loop 101 is broken up into segments which convey flow to the south and then west under the freeway to the Agua Fria River. Flow that exceeds the capacity of the channel is not conveyed west but is diverted to the south following the local topography.

Glendale/Peoria ADMPU

There are several areas in the Glendale/Peoria ADMPU watershed which have large drainage channels. All channel capacity diversions result from the capacity of a channel being exceeded and the excess flow continuing in a natural flow direction different from the channel. The diversion locations are discussed below.

Flow is conveyed to the south in a drainage channel along 99th Avenue. At the intersection of 99th Avenue and Del Webb Boulevard the channel alignment turns west to convey flow along the Del Webb Boulevard alignment. Flow that exceeds the capacity of the channel will continue to the south. Near the intersection of Del Webb Boulevard and Bell Road, the channel turns west to convey flow along the Bell Road alignment. Flow that exceeds the capacity of the channel at this location will continue to the south.

Flow is conveyed west in a drainage channel north of Greenway Road between 91st Avenue and New River. Flow that exceeds the capacity of the channel is not conveyed west but is diverted to the south.

A channel along Pinnacle Peak Road is currently being designed but not yet constructed. For the existing conditions model, the channel capacity is set to zero and all flow goes south since the channel does not yet exist. In the future conditions model, the channel capacity was included and any flow exceeding the capacity of the channel was diverted south. At the time of this report the 30% design plans have not yet been completed so preliminary design data was used for the Pinnacle Peak channel.

Flow is conveyed west in the Rose Garden Lane channel from 93rd Avenue to the Agua Fria River. This channel was designed with the capacity to convey the 100-year storm event; however there is a channel just east of 101st Avenue which conveys some of the flow from the Rose Garden Lane channel to the south. East of the Rose Garden Lane channel is a local retention area that releases stormwater west to the channel and south in a channel towards Beardsley Road. The data for both of these Rose Garden Lane channel diversions were taken from the Northwest Region Update and modified to switch the direction of the diversion to fit the current model. Previously the flow was diverted to the south and the model continued to the west. These diversions were revised so flow was diverted in the west direction and the model continued south.

A drainage channel south of Beardsley Road conveys flow to the west from 99th Avenue to the Agua Fria River. Some flow will continue south at 99th Avenue. This diversion was taken from the Northwest Region Update and modified to switch the direction to fit the current model. Previously the flow was diverted to the south and the model continued to the west. These diversions were revised so flow was diverted in the west direction and the model continued south.

Several local channels west of 67th Avenue and north of Deer Valley Road convey flow from various subdivisions west to New River. Flow that exceeds the capacity of these channels is not conveyed west but is diverted to the south. As-built data for these channels was not available. The data was obtained from the Glendale/Peoria ADMPU.

4.13 Cumulative Area for Areal Reduction

The use of areal reduction factors in conjunction with diversions in HEC-1 models may cause an error at combination points downstream of diversions. This error occurs because the diversion does not keep track of the upstream contributing area. The error was corrected by hard coding the total area at the combination point downstream of a diversion. The area contributing to each combination point was calculated based on the percent of flow diverted from the upstream combination point. Cumulative area calculations are located in **Appendix H**.

5.0 Significant Drainage Features

5.1 Grand Avenue

Grand Avenue is a major street that runs diagonally northwest/southeast through both project areas, along the BNSF Railroad alignment. Grand Avenue is situated perpendicular to the flow direction and typically acts as a drainage barrier. Because Grand Avenue crosses major intersections at a diagonal, a third possible flow path is created. At several of these major intersections a fly-over has been constructed.

Detention basins along Grand Avenue near 27th Avenue, 43rd Avenue, 63rd Avenue, and 75th Avenue were added into the HEC-1 models. Preparation of new detailed topographic and survey data were not a part of this study. Stage, storage, and discharge data for these basins was developed from the following sources:

- As-Built data
- Existing data from the 1997 Maryvale ADMS study or the 2008 Floodplain Delineation Study (this data was confirmed using FCDMC topography)
- Topography provided by FCDMC completed for the City

The HEC-1 level-pool storage routing routine was used to route through ponding areas and detention basins along Grand Avenue. **Table 6** provides information on each storage route along Grand Avenue.

Table 6. Storage Routing Upstream of Grand Avenue.

Basin ID	Data Source	Basin Name	Location
SRGR91	Maryvale ADMS	NA – ponding area	NW of 83rd Ave and Grand Ave
SRGR83	Maryvale ADMS	NA – ponding area	Between 75th and 83rd Ave along Grand Ave
SRGR75	As-built	ADOT basin along Grand Ave	75th Ave and Grand Ave
SROL71	Topography	Unnamed basin	71st Ave and Olive Ave
SRGR67	As-built	East Basin (surge basin for Orangewood Ave Storm Drain)	63rd Ave and Grand Ave
SRGR59	Maryvale ADMS	NA – ponding area	NW of 51st Ave and Grand Ave
SRGR43	Floodplain Delineation Study	Unnamed basin	Between 43rd and 51st Ave along Grand Ave
SRTM27	Final Plans	Verde Basin	26th Ave and Thomas Rd
SRGR27	As-built	ADOT basin along Grand Ave	27th Ave and Grand Ave

5.2 Grand Canal

The Grand Canal is part of the Salt River Project (SRP) distribution system. The canal is located in the Maryvale ADMS study area. Historically, ponding has occurred upstream

of the canal due to the embankments. The Bethany Home Outfall Channel was constructed to alleviate ponding upstream of the Grand Canal west of 63rd Avenue. The Sunset Basin accepts runoff from the east to 59th Avenue along the Canal. The Maryvale Ballpark detention basin located west of 51st Avenue also helps to alleviate the ponding. Storm drains that discharge into the Maryvale Ballpark extend from 57th Avenue back to the Ballpark.

Between 51st Avenue and 27th Avenue, runoff along the Grand Canal was modeled in a similar fashion as the 1997 Maryvale ADMS. The full flow capacity of existing storm drains was diverted to the south. Excess runoff will pond up against the Grand Canal and eventually overtop the canal or flow west. The rating curves of flow overtopping the Canal from the 1997 Maryvale ADMS were based upon survey data and were utilized for this study.

The HEC-1 level-pool storage routing routine was used to route through ponding areas and detention basins along the Grand Canal. **Table 7** provides information on storage areas between 27th and 59th Avenues along the Grand Canal. See **Table 8** for storage information along the Bethany Home Outfall Channel.

Table 7. Storage Routing Upstream of the Grand Canal.

Basin ID	Data Source	Basin Name	Location
SRGCGR	Maryvale ADMS	NA – ponding area	Between 27th and Grand Ave along the Grand Canal
SRGC43	Maryvale ADMS	NA – ponding area	Between 35th and 43rd Ave along the Grand Canal
SRGC51	Maryvale ADMS	NA – ponding area	Between 43rd and 51st Ave along the Grand Canal
SRGC53	As-built	Maryvale Ball Park	51st Ave and the Grand Canal

5.3 Bethany Home Outfall Channel

The Bethany Home Outfall Channel (BHOC) parallels the Grand Canal from east of 67th Avenue to New River. It was constructed to alleviate ponding upstream of the Grand Canal. Three reaches of the BHOC have been constructed and one is currently under construction. Reach A is an earth lined trapezoidal channel from Loop 101 to 83rd Avenue. Reach C consists of two nine-foot by nine-foot concrete box culverts between 83rd Avenue and 75th Avenue. Reach B extends from 75th Avenue to 67th Avenue. Reach B consists of a detention basin adjacent to the Grand Canal from 67th Avenue to 73rd Avenue; a rectangular concrete channel along the canal from 73rd Avenue to south of Camelback Road; and a concrete box culvert from south of Camelback Road to Reach C.

Reach D connects the Sunset Basin at Indian School Road and 63rd Avenue to Reach B through a 96-inch diameter storm drain. The majority of the Reach D storm drain is actually sloped back toward the Sunset Basin.

Future reaches of the BHOC system are under design and were included in the future conditions hydrology models. Reach E consists of a proposed storm drain in Camelback

Road. The size of Reach E ranges from 108-inches at the stub to 54 inches at 59th Avenue. Reach F is a proposed 96-inch diameter storm drain in Bethany Home Road that will eventually extend from Reach C to 43rd Avenue. The design between 71st and 79th Avenue has been completed and this portion was included in the future conditions model.

Reaches A and C were modeled using the Modified Puls (Normal Depth) channel routing routine. The HEC-1 level-pool storage routing routine was used to route through Reach B and Sunset Basin. **Table 8** provides information on the BHOC storage areas.

Table 8. Storage Routing Along the Bethany Home Outfall Channel.

Basin ID	Data Source	Basin Name	Location
SRISGC	As-built	Sunset Basin	Grand Canal and Indian School Rd
SRGC75	As-built	Bethany Home Outfall Channel Reach B	Along the Grand Canal between 67th Ave and 75th Ave

5.4 Arizona Canal Diversion Channel

The Arizona Canal Diversion Channel (ACDC) is the boundary between the Maryvale ADMS and Glendale/Peoria ADMPU study areas. It was constructed to provide 100-year flood protection to downstream areas. The channel is an earthen trapezoidal channel from Skunk Creek to 54th Avenue. East of 54th Avenue the ACDC becomes a concrete lined channel.

Because the ACDC provides 100-year protection, it is assumed that no flow will cross the channel in either the 10-year or 100-year storm events. It is the upstream boundary for the Maryvale ADMS watershed. The ACDC is the downstream boundary of the Glendale/Peoria ADMPU watershed because flows conveyed in the ACDC from areas upstream of the Glendale/Peoria ADMPU watershed have not been included in the hydrology model. "Dummy" combines have been included along the ACDC for modeling purposes only. These values should not be used as flows in the ACDC.

5.5 Arrowhead Lakes

The Arrowhead Lakes are located in the Glendale/Peoria ADMPU study area, north of Loop101 and east of 75th Avenue. They were constructed as part of the Arrowhead Lakes development to provide irrigation and to attenuate stormwater runoff. The lakes were designed for the 100-year, 24-hour storm event using the Natural Resources Conservation Service (NRCS) TR20 model. The lakes can be grouped into systems. Each system contains several lakes arranged in succession where upstream lakes discharge directly to the next lake in the sequence through a series of weirs. Some of the lake systems eventually drain to another lake system. The ultimate discharge of Arrowhead Lakes one through five consists of a channel near the 55th Avenue alignment conveying flow south of Loop 101 to Skunk Creek. The ultimate discharge for the remainder of the lakes is the drainage channel north of Loop 101 which conveys flow west to New River.

A special study for the Arrowhead Lakes was included as part of the Glendale/Peoria ADMPU (volume 13). The Glendale/Peoria ADMPU model included as-built data for each weir, drainage structure, and ground adjacent to the Arrowhead Lakes. As part of the Glendale/Peoria ADMPU, stage-storage-discharge relations were developed for each lake using 1996 topographic mapping and a detailed survey of the structures conducted as part of the project. These relations assumed that the initial water surface elevation was the top of the weir crest elevation. According to the Glendale/Peoria ADMPU, this was probably a conservative assumption since some of the lakes may be operating at a lower level, but it is unlikely that the lakes are operating above the weir crest elevation.

The Glendale/Peoria ADMPU hydrology model subdivided the Arrowhead Lakes area into five subwatersheds and over 90 subbasins. This model routes each of the 26 lakes separately. This level of detail was beyond the scope of this hydrology update. Some simplifying assumptions were made and compared with the Glendale/Peoria ADMPU results to ensure the results were reasonable. The Arrowhead Lakes drainage area was divided into five subbasins which correspond to the five sub-watersheds from the Glendale/Peoria ADMPU model. A composite stage-storage-discharge relationship was developed for all the lakes within each subbasin in order to use one storage route per subbasin.

Because lake elevations varied widely throughout some of the subbasin, volumes were combined by summing the volume at similar depths for each lake. Discharge values were only used for the most downstream lakes. The attenuation from these combined storage routes were compared with the attenuation from the Glendale/Peoria ADMPU. The comparison is presented in **Table 9** and the results are considered reasonable for this level of study.

Table 9. Comparison of Attenuation from Arrowhead Lakes.

Subbasin ID	Glendale/Peoria ADMPU Results			Current Study Results			Difference in Percent Reduction (%)
	Pre-Route Discharge (cfs)	Post-Route Discharge (cfs)	Percent Reduction (%)	Pre-Route Discharge (cfs)	Post-Route Discharge (cfs)	Percent Reduction (%)	
DV56	1,171	1,010	14%	475	382	20%	6%
LO51	1,869	730	61%	1,091	265	76%	15%
Total	**3,040**	**1,740**	**43%**	**1,566**	**647**	**59%**	**16%**
DV67	992	574	42%	1,026	716	30%	-12%
LO67	1,706	462	73%	1,414	443	69%	-4%
LO75	570	464	19%	1,003	622	38%	19%
Total	**3,268**	**1,500**	**54%**	**3,443**	**1,781**	**48%**	**-6%**

Notes:
Pre-Route Discharge is the sum of all the discharges contributing to all the storage routes within the subbasin.
Post-Route Discharge is the sum of all the discharges of the downstream lakes after the storage routes. Lakes which discharge to other lakes were not included in this total.

6.0 Verification and Conclusions

The hydrology models developed in this study for the Glendale Stormwater Management Plan were prepared in order to estimate on a planning level, the discharges associated with the 10-year and 100-year storm events for the project area. The hydrologic models will be used as base models to further develop stormwater alternatives in the City of Glendale. A summary of results are provided in **Appendix I**. A map with the results of the 100-year and 10-year storm events is provided on **Exhibit 9** and **Exhibit 11** in **Appendix J**.

6.1 Comparisons with Previous Studies

Maryvale ADMS

The 100-year peak discharge generated in each subbasin was compared with the corresponding subbasins in the Maryvale ADMS. Overall, the peak discharges from the model are, on the average, approximately 20% lower than the previous study. This decrease was anticipated due to the change from NOAA Atlas 2 to NOAA 14 rainfall depths. Although other changes between the previous and current study, such as land use, may have impacted localized changes in the hydrology results, the major factor in such a broad-based decrease in flows is most likely due to the change in rainfall.

Glendale/Peoria ADMPU

The 100-year peak discharge generated in each subbasin was compared with the corresponding subbasins in the Glendale/Peoria ADMPU and the Northwest Region Update. In order to make the comparison on a subbasin basis, the peak flow from several subbasins in the previous studies were combined and compared to a comparable subbasin in the model. Overall, the peak discharges from the model are approximately 30% lower than the previous studies. Similar to the Maryvale ADMS study area, this decrease was expected due to the change in rainfall depths.

6.2 Verification Using Regression Analysis

The peak discharges presented in this study are based on analytic methods which requires the input of numerous parameters. The DDM outlines procedures to qualitatively verify the peak discharges obtained by analytic methods. Verification for this study was conducted using regression analysis methodology. This method is based on an analysis of streamflow data throughout a number of western states that resulted in 16 sets of regional regression equations. The study area is located in Region 12.

The peak discharge values for the subbasins were compared with peak discharge values determined from the regression analysis approximation method for Region 12. It should be noted that the regression equations are empirical calculations and the results are only applicable to watersheds that are hydrologically similar to those used to derive the equations. The majority of the regression data was obtained from undeveloped

watersheds. Urbanized watersheds such as this study can have can have significantly higher discharges. Additionally, the equations for Region 12 are functions of drainage area and mean basin elevation. The mean basin elevations for subbasins in this project area do not fall within the "cloud of common values" specified for Region 12 regression data. With this understanding, the model results are reasonable when compared with the regression analysis.

6.3 Conclusions

The purpose of this hydrology investigation was to update the hydrology for existing and future conditions in the Maryvale ADMS and Glendale/Peoria ADMPU study areas. The results of the hydrology study will be used to develop a recommended Stormwater Management Plan to manage existing and potential flooding problems within the City of Glendale. The hydrology models provide a basis for the subsequent detailed examination of various site specific drainage improvements.

7.0 References

1. Arizona Department of Transportation (ADOT). *State Highway Agua Fria Freeway (101L), Camelback Road-Northern Avenue* As-built records. Prepared by De Leuw, Cather Co. 2001.

2. ADOT. *State Highway Agua Fria Freeway (101L), Encanto Blvd-Camelback Rd* As-built records. Prepared by Premier. 1999.

3. ADOT. *State Highway Wickenburg-Phoenix Highway (US 60) – 27th Ave/Thomas Rd, 91st Ave Ramps to101L* As-built records. Prepared by Earth Tech. 2001.

4. ADOT. *State Highway Wickenburg-Phoenix Highway (US 60), Grand Ave: 59th-Glendale Ave*. Prepared by Baker. 2004.

5. ADOT. *State Highway Wickenburg-Phoenix Highway (US 60), Grand Ave: 75th Ave-Olive Ave* As-built records. Prepared by Aztec. 2004.

6. ADOT. *Urban Highway Northwest Outer Loop, Addendum No. 1* As-built records. Prepared by Franzoy Corey and Associates. 1991.

7. ADOT. *Urban Highway Northwest Outer Loop, Consolidated Drawings* As-built records. Prepared by Franzoy Corey and Associates. 1991.

8. City of Glendale. *59th Avenue Detention Basin*. Prepared by Ellis-Murphy. August 1990.

9. City of Glendale. *Bethany Home Road Storm Drain, 79th Avenue to 71st Avenue* 30% Preliminary plans. Plot date January 2010.

10. City of Glendale. *Butler Park Detention Basin Plan* As-built records. 1991.

11. City of Glendale. *Butler Park Street Improvements and Retention Basin* As-built records. 1990.

12. City of Glendale. *Chaparral Ranch Retention Basin*. Prepared by Coe and Van Loo. 1984.

13. City of Glendale. *Determination of Mapping and Flood Zone Changes and Elevation Certificates, Three Floodplain Locations along Grand Avenue, One Floodplain Location along Grand Canal, Technical Data Notebook*. Project Engineering Consultants, Ltd. September 2008.

14. City of Glendale. *Engineering Standards*. 2002.

15. City of Glendale. GIS land use shapefiles. Received August 10, 2009.

16. City of Glendale. GIS storm drain shapefiles. Received March 19, 2009.

17. City of Glendale. *Northern Avenue Storm Drain and Raw Water, 47th Avenue to 63rd Avenue*. Prepared by Stantec Consulting, Inc. and Premier. July 2009.

18. City of Glendale. *Orangewood Ave Storm Drain Sub-Phase "C" Contract fcd 99-07 Phase II* As-built records. Prepared by Wood, Patel, and Associates, Inc. 1980.

19. City of Glendale. *Plans for the Construction of Camelback Road Storm Drain, 59th Avenue to 75th Avenue* 100% Plans.

20. City of Glendale. *Standard Details*. 2002.

21. City of Glendale. *Sahuaro Ranch Park – Phase VI* Civil Survey. 1988.

22. City of Glendale. *Sunnyside Park* As-built records. 1991.

23. City of Peoria. GIS storm drain shapefiles. Received August 10, 2009.

24. City of Peoria. *Standard Details*. 2007.

25. City of Phoenix. *26th Avenue and Verde Lane Drainage Improvement Project Phase II*. Prepared by David Evans and Associates, Inc. 2006.

26. City of Phoenix. GIS land use shapefiles. Received August 18, 2009.

27. City of Phoenix. GIS storm drain shapefiles. Received August 21, 2009.

28. City of Phoenix. *Maryvale Baseball Park* As-built records. Prepared by Ellerbe Becket, Inc. and Wood, Patel, and Associates, Inc. 1997.

29. City of Phoenix. *Standard Details*. 2002.

30. City of Tucson. *Standards Manual for Drainage Design and Floodplain Management in Tucson, Arizona*. Prepared by Simons, Li and Associates, Inc. Revised July 1998.

31. Flood Control District of Maricopa County (FCDMC). *Bethany Home Outfall Channel, Technical Data Notebook Conditional Letter of Map Revision*. Prepared by DMJM Harris. January 2003.

32. FCDMC. *Drainage Design Manual for Maricopa County –Hydrology*. November 2009.

33. FCDMC. *Drainage Policies and Standards for Maricopa County, Arizona*. September 2009.

34. FCDMC. DDMSW version 4.1.9 NOAA 14 Maps.

35. FCDMC. *Final Drainage Report, 83rd Avenue/Pinnacle Peak Road Drainage Improvements*. January 2006.

36. FCDMC. GIS shapefiles including soils and MAG landuse, DTM data and orthophotographic tiles in electronic format for the project area. Extracted from the database July 24, 2009.

37. FCDMC. *Glendale/Peoria Area Drainage Master Plan Update Hydrology Report.* Prepared by Entellus. May 30, 2001.

38. FCDMC. *Glendale/Peoria Area Drainage Master Plan Update Northwest Region Update Hydrology Study.* Prepared by Wood, Patel & Associates, Inc. May 2007.

39. FCDMC. *Maryvale Area Drainage Master Study Hydrology.* Prepared by Wood, Patel & Associates, Inc. February 1997.

40. FCDMC. *Metro Phoenix Area Drainage Master Study/Plan Hydrology Study Report.* Prepared by Wood, Patel & Associates, Inc. October 2006.

41. FCDMC. *Northern and Butler Storm Drains Sub-Phase "A" Phase II* As-built records. Prepared by Wood, Patel, and Associates, Inc. 2001.

42. FCDMC. *Plans for the Construction of 83rd Avenue/Pinnacle Peak Road Drainage Improvements* As-built records. Prepared by Jacobs Civil Inc. 2007.

43. FCDMC. *Plans for the Construction of Bethany Home Outfall Channel Reach B – 73rd Avenue to 67th Avenue* As-built records. Prepared by DMJM Harris. 2007.

44. FCDMC. *Plans for the Construction of Bethany Home Outfall Channel Reach C – 83rd Avenue to 73rd Avenue* As-built records. Prepared by DMJM Harris. 2007.

45. FCDMC. *Plans for the Construction of: Bethany Home Outfall Channel SR 101L to 83rd Avenue* As-built records. Prepared by DMJM Harris. 2004.

Appendix A Maryvale ADMS Area DDMSW Data

Rainfall Data

Existing and Future Subbasin Data

Existing and Future Land Use by Subbasin

Soils by Subbasin

Rainfall Data

ID	Method	Duration	2 Year	5 Year	10 Year	25 Year	50 Year	100 Year
DEFAULT	NOAA14	5 MIN	0.261	0.354	0.425	0.519	0.593	0.667
	NOAA14	10 MIN	0.397	0.538	0.646	0.791	0.902	1.015
	NOAA14	15 MIN	0.492	0.667	0.801	0.980	1.118	1.258
	NOAA14	30 MIN	0.662	0.899	1.079	1.320	1.506	1.695
	NOAA14	1 HOUR	0.820	1.112	1.336	1.634	1.864	2.097
	NOAA14	2 HOUR	0.927	1.240	1.479	1.803	2.050	2.307
	NOAA14	3 HOUR	0.972	1.279	1.522	1.858	2.126	2.406
	NOAA14	6 HOUR	1.146	1.469	1.725	2.076	2.351	2.638
	NOAA14	12 HOUR	1.274	1.614	1.881	2.241	2.516	2.801
	NOAA14	24 HOUR	1.453	1.883	2.222	2.691	3.063	3.450

Existing Subbasin Data

Area ID	Sub Basin Parameters: Area (sq mi)	Length (mi)	Slope (ft/mi)	Adj Slope	Time-Area	Kb	Rainfall Losses: IA (in)	DTHETA	PSIF (in)	XKSAT (in/hr)	RTIMP (%)		Return Period Parameters: 2 Yr	5 Yr	10 Yr	25 Yr	50 Yr	100 Yr
Major Basin ID: MV																		
BH27	0.258	1.00	22.0	22.0	Urban	0.067	0.21	0.25	4.80	0.25	55	Tc (Hrs)	1.042*	1.042*	1.019*	0.935*	0.881	0.834
												Vel (f/s)	1.41	1.41	1.44	1.57	1.66	1.76
												R (Hrs)	0.838	0.838	0.818	0.743	0.696	0.654
BH35	1.005	1.00	20.5	20.5	Urban	0.068	0.24	0.25	5.20	0.22	36	Tc (Hrs)	1.198*	1.198*	1.163*	1.039*	0.969*	0.910
												Vel (f/s)	1.22	1.22	1.26	1.41	1.51	1.61
												R (Hrs)	0.451	0.451	0.436	0.385	0.356	0.332
BH43	0.993	2.00	13.4	13.4	Urban	0.069	0.23	0.25	5.20	0.24	32	Tc (Hrs)	1.500*	1.500*	1.500*	1.500*	1.500*	1.498*
												Vel (f/s)	1.96	1.96	1.96	1.96	1.96	1.96
												R (Hrs)	1.014	1.014	1.014	1.014	1.014	1.013
BH51	0.995	2.03	10.9	10.9	Urban	0.066	0.22	0.23	6.20	0.15	43	Tc (Hrs)	1.500*	1.500*	1.500*	1.500*	1.500*	1.500*
												Vel (f/s)	1.98	1.98	1.98	1.98	1.98	1.98
												R (Hrs)	1.025	1.025	1.025	1.025	1.025	1.025
BH59	0.493	1.00	13.1	13.1	Urban	0.035	0.17	0.26	5.00	0.23	66	Tc (Hrs)	0.847	0.847	0.830	0.764	0.723	0.687
												Vel (f/s)	1.73	1.73	1.77	1.92	2.03	2.13
												R (Hrs)	0.460	0.460	0.450	0.411	0.386	0.365
BH67	0.971	1.97	14.0	14.0	Urban	0.072	0.23	0.26	5.60	0.19	38	Tc (Hrs)	1.500*	1.500*	1.500*	1.500*	1.500*	1.466*
												Vel (f/s)	1.93	1.93	1.93	1.93	1.93	1.97
												R (Hrs)	1.015	1.015	1.015	1.015	1.015	0.990
BH75	1.003	2.00	13.9	13.9	Urban	0.069	0.27	0.15	9.70	0.05	32	Tc (Hrs)	1.500*	1.500*	1.500*	1.500*	1.456*	1.384*
												Vel (f/s)	1.96	1.96	1.96	1.96	2.01	2.12
												R (Hrs)	1.009	1.009	1.009	1.009	0.976	0.922
BH83	0.998	2.01	13.8	13.8	Urban	0.061	0.27	0.19	7.60	0.09	24	Tc (Hrs)	1.500*	1.500*	1.500*	1.500*	1.415*	1.336*
												Vel (f/s)	1.97	1.97	1.97	1.97	2.08	2.21
												R (Hrs)	1.016	1.016	1.016	1.016	0.952	0.893
BH91	1.032	2.10	12.9	12.9	Urban	0.063	0.27	0.16	7.60	0.10	21	Tc (Hrs)	1.500*	1.500*	1.500*	1.500*	1.500*	1.422*
												Vel (f/s)	2.05	2.05	2.05	2.05	2.05	2.17
												R (Hrs)	1.032	1.032	1.032	1.032	1.032	0.973

* Non default value or value out of range

Area ID	Sub Basin Parameters: Area (sq mi)	Length (mi)	Slope (ft/mi)	Adj Slope	Time-Area	Kb	Rainfall Losses: IA (in)	DTHETA	PSIF (in)	XKSAT (in/hr)	RTIMP (%)		Return Period Parameters: 2 Yr	5 Yr	10 Yr	25 Yr	50 Yr	100 Yr
Major Basin ID: MV																		
BH99	0.184	1.10	9.1	9.1	Urban	0.046	0.39	0.19	6.60	0.19	20	Tc (Hrs)	1.329*	1.329*	1.292*	1.154*	1.070*	0.998*
												Vel (f/s)	1.21	1.21	1.25	1.40	1.51	1.62
												R (Hrs)	1.437	1.437	1.393	1.229	1.130	1.046
BHLO	0.788	1.75	10.8	10.8	Urban	0.023	0.10	0.15	7.30	0.09	81	Tc (Hrs)	0.921*	0.921*	0.903	0.839	0.799	0.763
												Vel (f/s)	2.79	2.79	2.84	3.06	3.21	3.36
												R (Hrs)	0.605	0.605	0.592	0.546	0.517	0.491
BHNR	0.258	0.75	10.7	10.7	Urban	0.055	0.45	0.25	6.20	0.24		Tc (Hrs)	1.372*	1.372*	1.309*	1.130*	1.035*	0.951*
												Vel (f/s)	0.80	0.80	0.84	0.97	1.06	1.16
												R (Hrs)	0.904	0.904	0.858	0.729	0.661	0.602
BHRI	0.512	1.39	13.4	13.4	Urban	0.047	0.48	0.24	6.20	0.25		Tc (Hrs)	1.500*	1.500*	1.500*	1.340*	1.227*	1.125*
												Vel (f/s)	1.36	1.36	1.36	1.52	1.66	1.81
												R (Hrs)	1.106	1.106	1.106	0.976	0.885	0.804
CB07	0.317	0.99	7.3	7.3	Urban	0.088	0.31	0.26	6.00	0.22	4	Tc (Hrs)	1.500*	1.500*	1.500*	1.500*	1.500*	1.496*
												Vel (f/s)	0.97	0.97	0.97	0.97	0.97	0.97
												R (Hrs)	1.108	1.108	1.108	1.108	1.108	1.105
CB27	0.262	1.01	17.9	17.9	Urban	0.062	0.20	0.25	5.10	0.22	54	Tc (Hrs)	1.070*	1.070*	1.047*	0.958*	0.903	0.855
												Vel (f/s)	1.38	1.38	1.41	1.55	1.64	1.73
												R (Hrs)	0.863	0.863	0.842	0.763	0.715	0.673
CB35	1.000	2.00	11.2	11.2	Urban	0.062	0.24	0.25	5.00	0.25	39	Tc (Hrs)	1.500*	1.500*	1.500*	1.500*	1.500*	1.483*
												Vel (f/s)	1.96	1.96	1.96	1.96	1.96	1.98
												R (Hrs)	1.010	1.010	1.010	1.010	1.010	0.997
CB43	0.999	1.00	21.1	21.1	Urban	0.075	0.24	0.25	4.80	0.26	35	Tc (Hrs)	1.270*	1.270*	1.233*	1.100*	1.023*	0.959*
												Vel (f/s)	1.15	1.15	1.19	1.33	1.43	1.53
												R (Hrs)	0.483	0.483	0.467	0.411	0.380	0.353
CB51	0.483	0.98	24.9	24.9	Urban	0.024	0.15	0.25	5.00	0.23	80	Tc (Hrs)	0.546	0.546	0.536	0.496	0.471	0.449
												Vel (f/s)	2.63	2.63	2.68	2.90	3.05	3.20
												R (Hrs)	0.282	0.282	0.276	0.253	0.239	0.227

* Non default value or value out of range

Area ID	Sub Basin Parameters: Area (sq mi)	Length (mi)	Slope (ft/mi)	Adj Slope	Time-Area	Kb	Rainfall Losses: IA (in)	DTHETA	PSIF (in)	XKSAT (in/hr)	RTIMP (%)		Return Period Parameters: 2 Yr	5 Yr	10 Yr	25 Yr	50 Yr	100 Yr
Major Basin ID: MV																		
CB59	1.010	2.02	14.4	14.4	Urban	0.041	0.18	0.27	5.10	0.22	60	Tc (Hrs)	1.343*	1.343*	1.311*	1.195*	1.127*	1.068*
												Vel (f/s)	2.21	2.21	2.26	2.48	2.63	2.77
												R (Hrs)	0.895	0.895	0.872	0.787	0.737	0.695
CB67	0.970	1.97	14.7	14.7	Urban	0.073	0.24	0.15	7.60	0.08	35	Tc (Hrs)	1.500*	1.500*	1.500*	1.500*	1.468*	1.394*
												Vel (f/s)	1.93	1.93	1.93	1.93	1.97	2.07
												R (Hrs)	1.016	1.016	1.016	1.016	0.992	0.936
CB75	0.998	2.00	13.4	13.4	Urban	0.074	0.25	0.15	7.30	0.10	32	Tc (Hrs)	1.500*	1.500*	1.500*	1.500*	1.500*	1.470*
												Vel (f/s)	1.96	1.96	1.96	1.96	1.96	2.00
												R (Hrs)	1.012	1.012	1.012	1.012	1.012	0.989
CB83	0.554	1.02	20.7	20.7	Urban	0.083	0.27	0.15	8.00	0.08	20	Tc (Hrs)	1.220*	1.220*	1.187*	1.074*	1.009*	0.955*
												Vel (f/s)	1.23	1.23	1.26	1.39	1.48	1.57
												R (Hrs)	0.656	0.656	0.636	0.569	0.531	0.500
CB91	0.961	1.95	14.4	14.4	Urban	0.048	0.41	0.17	8.80	0.08	6	Tc (Hrs)	1.500*	1.500*	1.500*	1.361*	1.259*	1.177*
												Vel (f/s)	1.91	1.91	1.91	2.10	2.27	2.43
												R (Hrs)	1.013	1.013	1.013	0.909	0.834	0.774
CB99	0.201	1.18	14.5	14.5	Urban	0.051	0.21	0.25	7.30	0.09	35	Tc (Hrs)	1.124*	1.124*	1.096*	0.994*	0.937*	0.886
												Vel (f/s)	1.54	1.54	1.58	1.74	1.85	1.95
												R (Hrs)	1.201	1.201	1.166	1.048	0.980	0.922
CBLO	0.818	1.82	13.2	13.2	Urban	0.045	0.39	0.15	8.80	0.08	14	Tc (Hrs)	1.464*	1.464*	1.418*	1.262*	1.176*	1.104*
												Vel (f/s)	1.82	1.82	1.88	2.12	2.27	2.42
												R (Hrs)	1.023	1.023	0.987	0.867	0.802	0.748
CBNR	0.466	1.72	11.1	11.1	Urban	0.042	0.13	0.30	5.80	0.24	3	Tc (Hrs)	1.500*	1.500*	1.500*	1.381*	1.271*	1.176*
												Vel (f/s)	1.68	1.68	1.68	1.83	1.98	2.15
												R (Hrs)	1.384	1.384	1.384	1.262	1.152	1.056
CBRI	0.698	2.02	12.4	12.4	Urban	0.068	0.34	0.15	7.00	0.13	21	Tc (Hrs)	1.500*	1.500*	1.500*	1.500*	1.500*	1.467*
												Vel (f/s)	1.98	1.98	1.98	1.98	1.98	2.02
												R (Hrs)	1.250	1.250	1.250	1.250	1.250	1.219

* Non default value or value out of range

Area ID	Sub Basin Parameters: Area (sq mi)	Length (mi)	Slope (ft/mi)	Adj Slope	Time-Area	Kb	Rainfall Losses: IA (in)	DTHETA	PSIF (in)	XKSAT (in/hr)	RTIMP (%)		Return Period Parameters: 2 Yr	5 Yr	10 Yr	25 Yr	50 Yr	100 Yr
Major Basin ID: MV																		
CT59	0.296	0.90	20.7	20.7	Urban	0.082	0.24	0.15	8.80	0.06	30	Tc (Hrs)	1.093*	1.093*	1.066*	0.974*	0.920*	0.874
												Vel (f/s)	1.21	1.21	1.24	1.36	1.43	1.51
												R (Hrs)	0.751	0.751	0.731	0.661	0.621	0.586
CT67	0.910	1.62	23.5	23.5	Urban	0.068	0.28	0.15	7.30	0.11	26	Tc (Hrs)	1.379*	1.379*	1.340*	1.208*	1.134*	1.070*
												Vel (f/s)	1.72	1.72	1.77	1.97	2.10	2.22
												R (Hrs)	0.821	0.821	0.795	0.708	0.660	0.619
CT75	1.003	2.00	17.1	17.1	Urban	0.076	0.28	0.15	8.80	0.06	25	Tc (Hrs)	1.500*	1.500*	1.500*	1.500*	1.449*	1.375*
												Vel (f/s)	1.96	1.96	1.96	1.96	2.02	2.13
												R (Hrs)	1.009	1.009	1.009	1.009	0.971	0.916
CT83	1.008	2.01	16.8	16.8	Urban	0.078	0.25	0.15	8.40	0.06	30	Tc (Hrs)	1.500*	1.500*	1.500*	1.500*	1.471*	1.397*
												Vel (f/s)	1.97	1.97	1.97	1.97	2.00	2.11
												R (Hrs)	1.010	1.010	1.010	1.010	0.988	0.933
CTLO	0.865	2.26	21.3	21.3	Urban	0.072	0.20	0.15	7.30	0.09	47	Tc (Hrs)	1.500*	1.500*	1.500*	1.449*	1.373*	1.306*
												Vel (f/s)	2.21	2.21	2.21	2.29	2.41	2.54
												R (Hrs)	1.210	1.210	1.210	1.165	1.097	1.037
GC35	0.077	0.37	17.4	17.4	Urban	0.029	0.15	0.25	4.25	0.35	80	Tc (Hrs)	0.415	0.415	0.407	0.377	0.359	0.342
												Vel (f/s)	1.31	1.31	1.33	1.44	1.51	1.59
												R (Hrs)	0.271	0.271	0.266	0.244	0.231	0.219
GC43	0.370	1.47	6.9	6.9	Urban	0.025	0.15	0.25	6.00	0.15	80	Tc (Hrs)	1.011*	1.011*	0.991*	0.918*	0.873	0.832
												Vel (f/s)	2.13	2.13	2.18	2.35	2.47	2.59
												R (Hrs)	0.899	0.899	0.879	0.807	0.763	0.724
GC51	0.448	1.44	7.7	7.7	Urban	0.081	0.24	0.25	5.00	0.24	36	Tc (Hrs)	1.500*	1.500*	1.500*	1.500*	1.500*	1.500*
												Vel (f/s)	1.41	1.41	1.41	1.41	1.41	1.41
												R (Hrs)	1.228	1.228	1.228	1.228	1.228	1.228
GC59	0.410	1.21	12.3	12.3	Urban	0.056	0.24	0.23	6.20	0.16	42	Tc (Hrs)	1.279*	1.279*	1.248*	1.132*	1.064*	1.005*
												Vel (f/s)	1.39	1.39	1.42	1.57	1.67	1.77
												R (Hrs)	0.941	0.941	0.916	0.822	0.767	0.720

* Non default value or value out of range

Area ID	Sub Basin Parameters: Area (sq mi)	Length (mi)	Slope (ft/mi)	Adj Slope	Time-Area	Kb	Rainfall Losses: IA (in)	DTHETA	PSIF (in)	XKSAT (in/hr)	RTIMP (%)		Return Period Parameters: 2 Yr	5 Yr	10 Yr	25 Yr	50 Yr	100 Yr
Major Basin ID: MV																		
GC67	0.936	1.73	12.8	12.8	Urban	0.061	0.21	0.15	7.30	0.11	28	Tc (Hrs)	1.500*	1.500*	1.500*	1.410*	1.327*	1.256*
												Vel (f/s)	1.69	1.69	1.69	1.80	1.91	2.02
												R (Hrs)	0.934	0.934	0.934	0.872	0.815	0.767
GC75	0.410	1.86	6.9	6.9	Urban	0.085	0.24	0.15	8.00	0.07	33	Tc (Hrs)	1.500*	1.500*	1.500*	1.500*	1.500*	1.500*
												Vel (f/s)	1.82	1.82	1.82	1.82	1.82	1.82
												R (Hrs)	1.585	1.585	1.585	1.585	1.585	1.585
GC83	0.426	2.12	7.3	7.3	Urban	0.072	0.25	0.15	8.40	0.07	26	Tc (Hrs)	1.500*	1.500*	1.500*	1.500*	1.500*	1.500*
												Vel (f/s)	2.07	2.07	2.07	2.07	2.07	2.07
												R (Hrs)	1.722	1.722	1.722	1.722	1.722	1.722
GCGR	0.376	0.33	35.7	35.7	Urban	0.034	0.15	0.25	5.00	0.23	77	Tc (Hrs)	0.342	0.342	0.335	0.310	0.294*	0.280*
												Vel (f/s)	1.42	1.42	1.44	1.56	1.65	1.73
												R (Hrs)	0.081	0.081	0.079	0.073	0.068	0.065
GL27	0.258	1.00	22.0	22.0	Urban	0.086	0.23	0.17	6.80	0.11	45	Tc (Hrs)	1.163*	1.163*	1.135*	1.037*	0.980*	0.930*
												Vel (f/s)	1.26	1.26	1.29	1.41	1.50	1.58
												R (Hrs)	0.947	0.947	0.922	0.834	0.783	0.739
GL35	1.004	2.01	10.5	10.5	Urban	0.073	0.23	0.23	6.20	0.15	34	Tc (Hrs)	1.500*	1.500*	1.500*	1.500*	1.500*	1.500*
												Vel (f/s)	1.97	1.97	1.97	1.97	1.97	1.97
												R (Hrs)	1.012	1.012	1.012	1.012	1.012	1.012
GL43	0.998	1.99	14.6	14.6	Urban	0.071	0.24	0.15	7.30	0.09	36	Tc (Hrs)	1.500*	1.500*	1.500*	1.500*	1.462*	1.388*
												Vel (f/s)	1.95	1.95	1.95	1.95	2.00	2.10
												R (Hrs)	1.007	1.007	1.007	1.007	0.979	0.924
GL51	1.002	2.00	12.0	12.0	Urban	0.069	0.23	0.25	5.40	0.20	41	Tc (Hrs)	1.500*	1.500*	1.500*	1.500*	1.500*	1.500*
												Vel (f/s)	1.96	1.96	1.96	1.96	1.96	1.96
												R (Hrs)	1.009	1.009	1.009	1.009	1.009	1.009
GL59	1.015	2.03	15.1	15.1	Urban	0.060	0.20	0.25	5.20	0.22	46	Tc (Hrs)	1.500*	1.500*	1.500*	1.482*	1.390*	1.312*
												Vel (f/s)	1.98	1.98	1.98	2.01	2.14	2.27
												R (Hrs)	1.014	1.014	1.014	1.001	0.932	0.874

* Non default value or value out of range

Area ID	Sub Basin Parameters: Area (sq mi)	Length (mi)	Slope (ft/mi)	Adj Slope	Time-Area	Kb	Rainfall Losses: IA (in)	DTHETA	PSIF (in)	XKSAT (in/hr)	RTIMP (%)		Return Period Parameters: 2 Yr	5 Yr	10 Yr	25 Yr	50 Yr	100 Yr
Major Basin ID: MV																		
GL67	0.359	0.96	20.4	20.4	Urban	0.045	0.19	0.25	5.40	0.19	63	Tc (Hrs)	0.826	0.826	0.809	0.743	0.703	0.667
												Vel (f/s)	1.70	1.70	1.74	1.90	2.00	2.11
												R (Hrs)	0.520	0.520	0.507	0.462	0.434	0.410
GL75	0.499	1.50	15.0	15.0	Urban	0.078	0.26	0.15	8.80	0.05	42	Tc (Hrs)	1.491*	1.491*	1.457*	1.336*	1.266*	1.205*
												Vel (f/s)	1.48	1.48	1.51	1.65	1.74	1.83
												R (Hrs)	1.185	1.185	1.155	1.049	0.988	0.936
GL83	0.495	1.49	17.5	17.5	Urban	0.078	0.27	0.16	7.00	0.11	28	Tc (Hrs)	1.500*	1.500*	1.466*	1.325*	1.246*	1.177*
												Vel (f/s)	1.46	1.46	1.49	1.65	1.75	1.86
												R (Hrs)	1.192	1.192	1.162	1.039	0.970	0.911
GL91	0.979	1.99	12.2	12.2	Urban	0.065	0.28	0.19	6.80	0.13	25	Tc (Hrs)	1.500*	1.500*	1.500*	1.500*	1.500*	1.447*
												Vel (f/s)	1.95	1.95	1.95	1.95	1.95	2.02
												R (Hrs)	1.019	1.019	1.019	1.019	1.019	0.979
GLLO	0.848	1.61	16.0	16.0	Urban	0.048	0.37	0.21	6.60	0.18	21	Tc (Hrs)	1.500*	1.500*	1.485*	1.306*	1.207*	1.124*
												Vel (f/s)	1.77	1.77	1.79	2.03	2.20	2.36
												R (Hrs)	1.025	1.025	1.013	0.878	0.805	0.744
GLNR	0.483	1.86	13.9	13.9	Urban	0.050	0.32	0.25	6.40	0.17	25	Tc (Hrs)	1.500*	1.500*	1.500*	1.353*	1.258*	1.177*
												Vel (f/s)	1.82	1.82	1.82	2.02	2.17	2.32
												R (Hrs)	1.444	1.444	1.444	1.288	1.188	1.103
GR27	0.407	0.91	23.7	23.7	Urban	0.045	0.18	0.15	8.40	0.06	66	Tc (Hrs)	0.735	0.735	0.720	0.666	0.634	0.604
												Vel (f/s)	1.82	1.82	1.85	2.00	2.11	2.21
												R (Hrs)	0.407	0.407	0.398	0.365	0.345	0.328
GR35	0.531	1.05	20.8	20.8	Urban	0.054	0.21	0.26	4.80	0.26	49	Tc (Hrs)	0.997*	0.997*	0.974*	0.890	0.837	0.790
												Vel (f/s)	1.54	1.54	1.58	1.73	1.84	1.95
												R (Hrs)	0.550	0.550	0.536	0.485	0.453	0.425
GR43	0.514	1.01	24.0	24.0	Urban	0.061	0.22	0.26	4.90	0.24	44	Tc (Hrs)	1.006*	1.006*	0.982*	0.896	0.840	0.792
												Vel (f/s)	1.47	1.47	1.51	1.65	1.76	1.87
												R (Hrs)	0.549	0.549	0.534	0.482	0.449	0.421

* Non default value or value out of range

Area ID	Sub Basin Parameters: Area (sq mi)	Length (mi)	Slope (ft/mi)	Adj Slope	Time-Area	Kb	Rainfall Losses: IA (in)	DTHETA	PSIF (in)	XKSAT (in/hr)	RTIMP (%)		Return Period Parameters: 2 Yr	5 Yr	10 Yr	25 Yr	50 Yr	100 Yr
Major Basin ID: MV																		
GR59	0.518	0.99	29.4	29.4	Urban	0.046	0.16	0.25	4.80	0.25	62	Tc (Hrs)	0.765	0.765	0.749	0.689	0.651	0.618
												Vel (f/s)	1.90	1.90	1.94	2.11	2.23	2.35
												R (Hrs)	0.397	0.397	0.388	0.353	0.332	0.313
GR67	0.497	0.99	15.5	15.5	Urban	0.050	0.18	0.16	7.60	0.09	43	Tc (Hrs)	0.962*	0.962*	0.940*	0.862	0.815	0.775
												Vel (f/s)	1.51	1.51	1.54	1.68	1.78	1.87
												R (Hrs)	0.524	0.524	0.511	0.463	0.436	0.412
GR75	0.496	0.98	16.5	16.5	Urban	0.056	0.25	0.17	8.80	0.05	42	Tc (Hrs)	0.988*	0.988*	0.965*	0.885	0.838	0.797
												Vel (f/s)	1.45	1.45	1.49	1.62	1.72	1.80
												R (Hrs)	0.536	0.536	0.522	0.474	0.446	0.422
GR83	0.468	0.98	14.3	14.3	Urban	0.064	0.18	0.14	10.10	0.03	53	Tc (Hrs)	1.069*	1.069*	1.047*	0.970*	0.923*	0.880
												Vel (f/s)	1.34	1.34	1.37	1.48	1.56	1.63
												R (Hrs)	0.604	0.604	0.591	0.543	0.513	0.487
GR91	0.514	0.94	13.4	13.4	Urban	0.068	0.25	0.13	10.10	0.03	37	Tc (Hrs)	1.123*	1.123*	1.098*	1.011*	0.960*	0.915
												Vel (f/s)	1.23	1.23	1.26	1.36	1.44	1.51
												R (Hrs)	0.585	0.585	0.571	0.521	0.492	0.466
GW83	0.291	1.34	23.8	23.8	Urban	0.077	0.30	0.25	4.70	0.31	24	Tc (Hrs)	1.437*	1.437*	1.397*	1.257*	1.173*	1.095*
												Vel (f/s)	1.37	1.37	1.41	1.56	1.68	1.79
												R (Hrs)	1.413	1.413	1.370	1.218	1.129	1.046
IN07	0.256	1.27	21.6	21.6	Urban	0.036	0.26	0.15	8.40	0.08	50	Tc (Hrs)	0.824	0.824	0.806	0.739	0.699	0.664
												Vel (f/s)	2.26	2.26	2.31	2.52	2.66	2.81
												R (Hrs)	0.786	0.786	0.766	0.696	0.654	0.618
IN27	0.105	0.63	14.4	14.4	Urban	0.029	0.14	0.25	5.60	0.18	80	Tc (Hrs)	0.570	0.570	0.559	0.517	0.492	0.469
												Vel (f/s)	1.62	1.62	1.65	1.79	1.88	1.97
												R (Hrs)	0.495	0.495	0.484	0.444	0.420	0.398
IN35	0.242	0.20	12.1	12.1	Urban	0.048	0.17	0.13	10.10	0.03	64	Tc (Hrs)	0.433	0.433	0.425	0.395	0.376	0.359
												Vel (f/s)	0.68	0.68	0.69	0.74	0.78	0.82
												R (Hrs)	0.091	0.091	0.089	0.082	0.077	0.073

* Non default value or value out of range

Area ID	Sub Basin Parameters: Area (sq mi)	Length (mi)	Slope (ft/mi)	Adj Slope	Time-Area	Kb	Rainfall Losses: IA (in)	DTHETA	PSIF (in)	XKSAT (in/hr)	RTIMP (%)		Return Period Parameters: 2 Yr	5 Yr	10 Yr	25 Yr	50 Yr	100 Yr
Major Basin ID: MV																		
IN43	0.256	0.27	9.4	9.4	Urban	0.071	0.20	0.15	9.70	0.04	49	Tc (Hrs)	0.682	0.682	0.667	0.616	0.585	0.558
												Vel (f/s)	0.58	0.58	0.59	0.64	0.68	0.71
												R (Hrs)	0.185	0.185	0.180	0.165	0.156	0.148
IN51	0.232	1.22	15.4	15.4	Urban	0.028	0.13	0.16	9.70	0.04	75	Tc (Hrs)	0.748	0.748	0.734	0.682	0.649	0.620
												Vel (f/s)	2.39	2.39	2.44	2.62	2.76	2.89
												R (Hrs)	0.723	0.723	0.708	0.652	0.618	0.587
IN59	0.202	1.14	9.5	9.5	Urban	0.065	0.20	0.16	9.70	0.04	54	Tc (Hrs)	1.330*	1.330*	1.302*	1.202*	1.143*	1.089*
												Vel (f/s)	1.26	1.26	1.28	1.39	1.46	1.54
												R (Hrs)	1.403	1.403	1.370	1.255	1.186	1.125
IN67	0.197	1.12	6.6	6.6	Urban	0.073	0.21	0.16	9.70	0.04	53	Tc (Hrs)	1.500*	1.500*	1.500*	1.419*	1.348*	1.285*
												Vel (f/s)	1.10	1.10	1.10	1.16	1.22	1.28
												R (Hrs)	1.604	1.604	1.604	1.508	1.425	1.351
IN75	0.199	1.13	8.5	8.5	Urban	0.062	0.19	0.21	6.60	0.12	55	Tc (Hrs)	1.385*	1.385*	1.354*	1.241*	1.174*	1.115*
												Vel (f/s)	1.20	1.20	1.22	1.34	1.41	1.49
												R (Hrs)	1.471	1.471	1.433	1.301	1.224	1.156
IN83	0.196	1.16	10.0	10.0	Urban	0.059	0.18	0.15	7.00	0.10	64	Tc (Hrs)	1.261*	1.261*	1.235*	1.140*	1.083*	1.032*
												Vel (f/s)	1.35	1.35	1.38	1.49	1.57	1.65
												R (Hrs)	1.365	1.365	1.333	1.220	1.152	1.092
IN91	0.185	1.13	25.3	25.3	Urban	0.042	0.11	0.17	9.70	0.04	64	Tc (Hrs)	0.768	0.768	0.753	0.698	0.665	0.634
												Vel (f/s)	2.16	2.16	2.20	2.37	2.49	2.61
												R (Hrs)	0.797	0.797	0.780	0.717	0.678	0.644
INAF	0.472	1.65	16.1	16.1	Urban	0.067	0.23	0.30	6.20	0.16	20	Tc (Hrs)	1.500*	1.500*	1.500*	1.422*	1.320*	1.236*
												Vel (f/s)	1.61	1.61	1.61	1.70	1.83	1.96
												R (Hrs)	1.329	1.329	1.329	1.253	1.153	1.072
INAV	0.235	1.14	25.4	25.4	Urban	0.040	0.32	0.15	8.00	0.10	37	Tc (Hrs)	0.818	0.818	0.797	0.723	0.681	0.644
												Vel (f/s)	2.04	2.04	2.10	2.31	2.46	2.60
												R (Hrs)	0.751	0.751	0.729	0.655	0.612	0.575

* Non default value or value out of range

Area ID	Sub Basin Parameters: Area (sq mi)	Length (mi)	Slope (ft/mi)	Adj Slope	Time-Area	Kb	Rainfall Losses: IA (in)	DTHETA	PSIF (in)	XKSAT (in/hr)	RTIMP (%)		Return Period Parameters: 2 Yr	5 Yr	10 Yr	25 Yr	50 Yr	100 Yr
Major Basin ID: MV																		
INLO	0.147	0.89	25.7	25.7	Urban	0.069	0.10	0.21	9.70	0.04	35	Tc (Hrs)	0.903	0.903	0.884	0.814	0.772	0.735
												Vel (f/s)	1.45	1.45	1.48	1.60	1.69	1.78
												R (Hrs)	0.898	0.898	0.877	0.800	0.755	0.715
IS07	1.021	2.03	10.8	10.8	Urban	0.060	0.22	0.16	8.00	0.08	27	Tc (Hrs)	1.500*	1.500*	1.500*	1.500*	1.496*	1.419*
												Vel (f/s)	1.98	1.98	1.98	1.98	1.99	2.10
												R (Hrs)	1.010	1.010	1.010	1.010	1.008	0.950
IS27	0.239	1.00	9.8	9.8	Urban	0.070	0.20	0.15	7.30	0.09	58	Tc (Hrs)	1.297*	1.297*	1.270*	1.169*	1.110*	1.057*
												Vel (f/s)	1.13	1.13	1.15	1.25	1.32	1.39
												R (Hrs)	1.117	1.117	1.090	0.995	0.939	0.890
IS35	0.990	1.00	20.0	20.0	Urban	0.069	0.24	0.15	7.60	0.09	31	Tc (Hrs)	1.115*	1.115*	1.087*	0.988*	0.931*	0.883
												Vel (f/s)	1.32	1.32	1.35	1.48	1.58	1.66
												R (Hrs)	0.420	0.420	0.408	0.367	0.344	0.324
IS43	0.467	0.93	23.4	23.4	Urban	0.025	0.15	0.25	4.80	0.25	80	Tc (Hrs)	0.554	0.554	0.544	0.504	0.479	0.456
												Vel (f/s)	2.46	2.46	2.51	2.71	2.85	2.99
												R (Hrs)	0.280	0.280	0.274	0.252	0.238	0.225
IS51	0.994	1.99	13.3	13.3	Urban	0.050	0.21	0.27	5.00	0.23	47	Tc (Hrs)	1.500*	1.500*	1.500*	1.394*	1.306*	1.232*
												Vel (f/s)	1.95	1.95	1.95	2.09	2.23	2.37
												R (Hrs)	1.010	1.010	1.010	0.931	0.866	0.811
IS59	1.014	2.01	13.9	13.9	Urban	0.066	0.22	0.25	5.30	0.21	43	Tc (Hrs)	1.500*	1.500*	1.500*	1.500*	1.499*	1.413*
												Vel (f/s)	1.97	1.97	1.97	1.97	1.97	2.09
												R (Hrs)	1.006	1.006	1.006	1.006	1.005	0.942
IS75	0.615	1.29	16.3	16.3	Urban	0.072	0.23	0.15	7.60	0.08	41	Tc (Hrs)	1.319*	1.319*	1.288*	1.179*	1.115*	1.060*
												Vel (f/s)	1.43	1.43	1.47	1.60	1.70	1.78
												R (Hrs)	0.814	0.814	0.793	0.719	0.676	0.639
IS83	0.991	1.98	16.2	16.2	Urban	0.074	0.24	0.17	6.80	0.12	34	Tc (Hrs)	1.500*	1.500*	1.500*	1.500*	1.466*	1.387*
												Vel (f/s)	1.94	1.94	1.94	1.94	1.98	2.09
												R (Hrs)	1.007	1.007	1.007	1.007	0.982	0.924

* Non default value or value out of range

Area ID	Sub Basin Parameters: Area (sq mi)	Length (mi)	Slope (ft/mi)	Adj Slope	Time-Area	Kb	Rainfall Losses: IA (in)	DTHETA	PSIF (in)	XKSAT (in/hr)	RTIMP (%)		Return Period Parameters: 2 Yr	5 Yr	10 Yr	25 Yr	50 Yr	100 Yr
Major Basin ID: MV																		
IS91	0.999	2.00	13.8	13.8	Urban	0.073	0.25	0.15	9.70	0.04	37	Tc (Hrs)	1.500*	1.500*	1.500*	1.500*	1.489*	1.416*
												Vel (f/s)	1.96	1.96	1.96	1.96	1.97	2.07
												R (Hrs)	1.011	1.011	1.011	1.011	1.002	0.948
IS99	0.323	1.20	10.4	10.4	Urban	0.045	0.44	0.15	9.70	0.07	12	Tc (Hrs)	1.265*	1.265*	1.226*	1.091*	1.016*	0.952*
												Vel (f/s)	1.39	1.39	1.44	1.61	1.73	1.85
												R (Hrs)	1.059	1.059	1.022	0.898	0.829	0.772
ISAF	0.989	2.30	10.0	10.0	Urban	0.061	0.23	0.25	4.80	0.26	45	Tc (Hrs)	1.500*	1.500*	1.500*	1.500*	1.500*	1.500*
												Vel (f/s)	2.25	2.25	2.25	2.25	2.25	2.25
												R (Hrs)	1.137	1.137	1.137	1.137	1.137	1.137
ISGC	0.159	1.04	6.7	6.7	Urban	0.093	0.25	0.15	7.00	0.11	32	Tc (Hrs)	1.500*	1.500*	1.500*	1.500*	1.500*	1.439*
												Vel (f/s)	1.02	1.02	1.02	1.02	1.02	1.06
												R (Hrs)	1.708	1.708	1.708	1.708	1.708	1.632
ISLO	0.684	1.51	12.6	12.6	Urban	0.059	0.34	0.15	9.70	0.06	21	Tc (Hrs)	1.473*	1.473*	1.432*	1.290*	1.211*	1.143*
												Vel (f/s)	1.50	1.50	1.55	1.72	1.83	1.94
												R (Hrs)	0.982	0.982	0.951	0.847	0.790	0.741
MD07	0.783	1.55	7.2	7.2	Urban	0.069	0.24	0.15	8.80	0.05	36	Tc (Hrs)	1.500*	1.500*	1.500*	1.500*	1.500*	1.471*
												Vel (f/s)	1.52	1.52	1.52	1.52	1.52	1.55
												R (Hrs)	0.947	0.947	0.947	0.947	0.947	0.927
MD27	0.241	0.97	18.6	18.6	Urban	0.026	0.15	0.15	8.00	0.07	80	Tc (Hrs)	0.606	0.606	0.595	0.552	0.526	0.502
												Vel (f/s)	2.35	2.35	2.39	2.58	2.70	2.83
												R (Hrs)	0.466	0.466	0.456	0.420	0.398	0.378
MD35	0.999	1.97	11.6	11.6	Urban	0.052	0.19	0.13	10.10	0.03	58	Tc (Hrs)	1.485*	1.485*	1.456*	1.349*	1.283*	1.224*
												Vel (f/s)	1.95	1.95	1.98	2.14	2.25	2.36
												R (Hrs)	0.988	0.988	0.966	0.888	0.840	0.797
MD43	0.999	1.00	18.8	18.8	Urban	0.075	0.22	0.15	9.70	0.04	41	Tc (Hrs)	1.132*	1.132*	1.107*	1.018*	0.966*	0.920*
												Vel (f/s)	1.30	1.30	1.32	1.44	1.52	1.59
												R (Hrs)	0.425	0.425	0.414	0.378	0.356	0.337

* Non default value or value out of range

Area ID	Sub Basin Parameters: Area (sq mi)	Length (mi)	Slope (ft/mi)	Adj Slope	Time-Area	Kb	Rainfall Losses: IA (in)	DTHETA	PSIF (in)	XKSAT (in/hr)	RTIMP (%)		Return Period Parameters: 2 Yr	5 Yr	10 Yr	25 Yr	50 Yr	100 Yr
Major Basin ID: MV																		
MD51	1.001	2.00	10.3	10.3	Urban	0.070	0.23	0.15	8.40	0.07	35	Tc (Hrs)	1.500*	1.500*	1.500*	1.500*	1.500*	1.500*
												Vel (f/s)	1.96	1.96	1.96	1.96	1.96	1.96
												R (Hrs)	1.010	1.010	1.010	1.010	1.010	1.010
MD59	1.005	2.00	12.8	12.8	Urban	0.074	0.25	0.15	7.60	0.08	33	Tc (Hrs)	1.500*	1.500*	1.500*	1.500*	1.500*	1.481*
												Vel (f/s)	1.96	1.96	1.96	1.96	1.96	1.98
												R (Hrs)	1.008	1.008	1.008	1.008	1.008	0.993
MD67	0.978	1.98	13.3	13.3	Urban	0.064	0.22	0.15	8.40	0.07	29	Tc (Hrs)	1.500*	1.500*	1.500*	1.500*	1.420*	1.348*
												Vel (f/s)	1.94	1.94	1.94	1.94	2.05	2.15
												R (Hrs)	1.015	1.015	1.015	1.015	0.955	0.902
MD75	1.002	1.99	13.3	13.3	Urban	0.067	0.23	0.15	7.60	0.08	38	Tc (Hrs)	1.500*	1.500*	1.500*	1.500*	1.453*	1.381*
												Vel (f/s)	1.95	1.95	1.95	1.95	2.01	2.11
												R (Hrs)	1.005	1.005	1.005	1.005	0.970	0.917
MD83	0.992	2.01	13.9	13.9	Urban	0.034	0.23	0.17	8.80	0.06	47	Tc (Hrs)	1.181*	1.181*	1.154*	1.059*	1.003*	0.954*
												Vel (f/s)	2.50	2.50	2.55	2.78	2.94	3.09
												R (Hrs)	0.782	0.782	0.762	0.692	0.652	0.617
MD91	1.007	2.00	12.9	12.9	Urban	0.067	0.23	0.15	8.80	0.05	39	Tc (Hrs)	1.500*	1.500*	1.500*	1.500*	1.456*	1.385*
												Vel (f/s)	1.96	1.96	1.96	1.96	2.01	2.12
												R (Hrs)	1.006	1.006	1.006	1.006	0.974	0.921
MD99	0.319	1.48	7.0	7.0	Urban	0.044	0.43	0.15	9.70	0.07	13	Tc (Hrs)	1.500*	1.500*	1.500*	1.349*	1.256*	1.179*
												Vel (f/s)	1.45	1.45	1.45	1.61	1.73	1.84
												R (Hrs)	1.523	1.523	1.523	1.354	1.251	1.165
MDAF	0.834	2.30	11.9	11.9	Urban	0.069	0.25	0.29	5.20	0.23	19	Tc (Hrs)	1.500*	1.500*	1.500*	1.500*	1.500*	1.500*
												Vel (f/s)	2.25	2.25	2.25	2.25	2.25	2.25
												R (Hrs)	1.253	1.253	1.253	1.253	1.253	1.253
MDAV	0.954	2.00	7.6	7.6	Urban	0.069	0.23	0.14	7.60	0.09	25	Tc (Hrs)	1.500*	1.500*	1.500*	1.500*	1.500*	1.500*
												Vel (f/s)	1.96	1.96	1.96	1.96	1.96	1.96
												R (Hrs)	1.038	1.038	1.038	1.038	1.038	1.038

* Non default value or value out of range

Area ID	Sub Basin Parameters: Area (sq mi)	Length (mi)	Slope (ft/mi)	Adj Slope	Time-Area	Kb	Rainfall Losses: IA (in)	DTHETA	PSIF (in)	XKSAT (in/hr)	RTIMP (%)		Return Period Parameters: 2 Yr	5 Yr	10 Yr	25 Yr	50 Yr	100 Yr
Major Basin ID: MV																		
MDLO	0.671	1.01	10.9	10.9	Urban	0.063	0.21	0.16	9.70	0.04	44	Tc (Hrs)	1.208*	1.208*	1.181*	1.088*	1.033*	0.983*
												Vel (f/s)	1.23	1.23	1.25	1.36	1.43	1.51
												R (Hrs)	0.577	0.577	0.563	0.514	0.485	0.460
NO27	0.126	1.14	16.6	16.6	Urban	0.045	0.18	0.15	8.80	0.05	63	Tc (Hrs)	0.917*	0.917*	0.898	0.831	0.791	0.754
												Vel (f/s)	1.82	1.82	1.86	2.01	2.11	2.22
												R (Hrs)	1.215	1.215	1.187	1.090	1.031	0.978
NO35	0.991	1.77	11.2	11.2	Urban	0.071	0.24	0.25	5.80	0.17	38	Tc (Hrs)	1.500*	1.500*	1.500*	1.500*	1.500*	1.471*
												Vel (f/s)	1.73	1.73	1.73	1.73	1.73	1.76
												R (Hrs)	0.921	0.921	0.921	0.921	0.921	0.901
NO43	0.995	1.99	15.1	15.1	Urban	0.075	0.24	0.21	6.40	0.14	33	Tc (Hrs)	1.500*	1.500*	1.500*	1.500*	1.500*	1.451*
												Vel (f/s)	1.95	1.95	1.95	1.95	1.95	2.01
												R (Hrs)	1.009	1.009	1.009	1.009	1.009	0.973
NO51	0.993	1.99	14.3	14.3	Urban	0.068	0.24	0.25	6.00	0.16	36	Tc (Hrs)	1.500*	1.500*	1.500*	1.500*	1.500*	1.414*
												Vel (f/s)	1.95	1.95	1.95	1.95	1.95	2.06
												R (Hrs)	1.010	1.010	1.010	1.010	1.010	0.947
NO59	0.992	1.99	15.5	15.5	Urban	0.070	0.25	0.15	7.60	0.09	28	Tc (Hrs)	1.500*	1.500*	1.500*	1.500*	1.437*	1.362*
												Vel (f/s)	1.95	1.95	1.95	1.95	2.03	2.14
												R (Hrs)	1.011	1.011	1.011	1.011	0.964	0.908
NO67	0.956	1.96	14.4	14.4	Urban	0.065	0.27	0.15	8.80	0.06	37	Tc (Hrs)	1.500*	1.500*	1.500*	1.459*	1.379*	1.310*
												Vel (f/s)	1.92	1.92	1.92	1.97	2.08	2.19
												R (Hrs)	1.020	1.020	1.020	0.989	0.929	0.878
NO75	0.506	0.99	16.2	16.2	Urban	0.048	0.21	0.15	8.40	0.07	58	Tc (Hrs)	0.906	0.906	0.887	0.817	0.776	0.739
												Vel (f/s)	1.60	1.60	1.64	1.78	1.87	1.96
												R (Hrs)	0.485	0.485	0.474	0.433	0.408	0.387
NO83	1.005	2.01	17.7	17.7	Urban	0.054	0.33	0.15	8.80	0.07	35	Tc (Hrs)	1.451*	1.451*	1.413*	1.281*	1.206*	1.142*
												Vel (f/s)	2.03	2.03	2.09	2.30	2.44	2.58
												R (Hrs)	0.975	0.975	0.947	0.849	0.794	0.747

* Non default value or value out of range

Area ID	Sub Basin Parameters: Area (sq mi)	Length (mi)	Slope (ft/mi)	Adj Slope	Time-Area	Kb	Rainfall Losses: IA (in)	DTHETA	PSIF (in)	XKSAT (in/hr)	RTIMP (%)		Return Period Parameters: 2 Yr	5 Yr	10 Yr	25 Yr	50 Yr	100 Yr
Major Basin ID: MV																		
NO91	0.993	2.00	14.3	14.3	Urban	0.068	0.29	0.17	8.00	0.08	23	Tc (Hrs)	1.500*	1.500*	1.500*	1.500*	1.469*	1.388*
												Vel (f/s)	1.96	1.96	1.96	1.96	2.00	2.11
												R (Hrs)	1.014	1.014	1.014	1.014	0.991	0.931
NOLO	0.280	1.66	12.3	12.3	Urban	0.026	0.10	0.15	7.30	0.09	85	Tc (Hrs)	0.898	0.898	0.881	0.819	0.780	0.746
												Vel (f/s)	2.71	2.71	2.76	2.97	3.12	3.26
												R (Hrs)	1.017	1.017	0.996	0.918	0.871	0.828
OL35	0.214	1.22	11.4	11.4	Urban	0.027	0.10	0.25	5.40	0.23	58	Tc (Hrs)	0.867	0.867	0.848	0.778	0.735	0.697
												Vel (f/s)	2.06	2.06	2.11	2.30	2.43	2.57
												R (Hrs)	0.891	0.891	0.870	0.791	0.742	0.700
OL43	0.635	1.32	14.1	14.1	Urban	0.080	0.25	0.25	5.40	0.20	33	Tc (Hrs)	1.500*	1.500*	1.500*	1.428*	1.333*	1.253*
												Vel (f/s)	1.29	1.29	1.29	1.36	1.45	1.55
												R (Hrs)	0.939	0.939	0.939	0.889	0.823	0.768
OL51	0.993	2.00	17.9	17.9	Urban	0.070	0.23	0.15	7.30	0.10	35	Tc (Hrs)	1.500*	1.500*	1.500*	1.455*	1.372*	1.301*
												Vel (f/s)	1.96	1.96	1.96	2.02	2.14	2.25
												R (Hrs)	1.014	1.014	1.014	0.981	0.919	0.866
OL59	0.990	1.99	17.1	17.1	Urban	0.074	0.24	0.15	8.80	0.05	34	Tc (Hrs)	1.500*	1.500*	1.500*	1.483*	1.405*	1.336*
												Vel (f/s)	1.95	1.95	1.95	1.97	2.08	2.18
												R (Hrs)	1.012	1.012	1.012	1.000	0.941	0.890
OL67	0.960	1.96	15.3	15.3	Urban	0.053	0.23	0.15	8.40	0.07	36	Tc (Hrs)	1.447*	1.447*	1.412*	1.290*	1.220*	1.159*
												Vel (f/s)	1.99	1.99	2.04	2.23	2.36	2.48
												R (Hrs)	0.978	0.978	0.952	0.861	0.809	0.764
OL75	1.004	2.01	16.2	16.2	Urban	0.071	0.23	0.15	8.80	0.06	32	Tc (Hrs)	1.500*	1.500*	1.500*	1.495*	1.414*	1.344*
												Vel (f/s)	1.97	1.97	1.97	1.97	2.08	2.19
												R (Hrs)	1.012	1.012	1.012	1.009	0.948	0.896
OL83	0.537	1.03	14.1	14.1	Urban	0.061	0.30	0.15	10.10	0.04	28	Tc (Hrs)	1.134*	1.134*	1.106*	1.008*	0.951*	0.904
												Vel (f/s)	1.33	1.33	1.37	1.50	1.59	1.67
												R (Hrs)	0.621	0.621	0.604	0.545	0.511	0.483

* Non default value or value out of range

Area ID	Sub Basin Parameters: Area (sq mi)	Length (mi)	Slope (ft/mi)	Adj Slope	Time-Area	Kb	Rainfall Losses: IA (in)	DTHETA	PSIF (in)	XKSAT (in/hr)	RTIMP (%)		Return Period Parameters: 2 Yr	5 Yr	10 Yr	25 Yr	50 Yr	100 Yr
Major Basin ID: MV																		
OL91	1.016	2.03	14.8	14.8	Urban	0.064	0.22	0.15	9.70	0.04	40	Tc (Hrs)	1.500*	1.500*	1.500*	1.441*	1.367*	1.301*
												Vel (f/s)	1.98	1.98	1.98	2.07	2.18	2.29
												R (Hrs)	1.013	1.013	1.013	0.969	0.914	0.865
OLLO	0.160	1.12	11.3	11.3	Urban	0.028	0.10	0.15	8.80	0.05	85	Tc (Hrs)	0.783	0.783	0.769	0.715	0.682	0.651
												Vel (f/s)	2.10	2.10	2.14	2.30	2.41	2.52
												R (Hrs)	0.878	0.878	0.860	0.793	0.752	0.715
OW67	0.119	0.53	17.7	17.7	Urban	0.034	0.23	0.15	8.00	0.08	62	Tc (Hrs)	0.538	0.538	0.526	0.485	0.460	0.439
												Vel (f/s)	1.44	1.44	1.48	1.60	1.69	1.77
												R (Hrs)	0.376	0.376	0.367	0.336	0.317	0.300
OW75	0.498	1.50	15.1	15.1	Urban	0.037	0.24	0.17	8.80	0.05	48	Tc (Hrs)	1.004*	1.004*	0.982*	0.902	0.855	0.814
												Vel (f/s)	2.19	2.19	2.24	2.44	2.57	2.70
												R (Hrs)	0.765	0.765	0.746	0.679	0.640	0.606
OW83	0.496	1.50	14.6	14.6	Urban	0.073	0.29	0.17	8.40	0.07	21	Tc (Hrs)	1.500*	1.500*	1.499*	1.354*	1.272*	1.203*
												Vel (f/s)	1.47	1.47	1.47	1.62	1.73	1.83
												R (Hrs)	1.197	1.197	1.196	1.069	0.997	0.937
PE51	0.419	1.01	19.4	19.4	Urban	0.079	0.22	0.15	8.80	0.05	37	Tc (Hrs)	1.136*	1.136*	1.111*	1.019*	0.966*	0.920*
												Vel (f/s)	1.30	1.30	1.33	1.45	1.53	1.61
												R (Hrs)	0.706	0.706	0.688	0.625	0.590	0.558
PE59	0.989	1.93	19.6	19.6	Urban	0.074	0.25	0.15	8.80	0.05	31	Tc (Hrs)	1.500*	1.500*	1.500*	1.405*	1.330*	1.264*
												Vel (f/s)	1.89	1.89	1.89	2.01	2.13	2.24
												R (Hrs)	0.988	0.988	0.988	0.919	0.864	0.817
PE67	0.962	1.96	16.9	16.9	Urban	0.069	0.23	0.15	7.60	0.09	36	Tc (Hrs)	1.500*	1.500*	1.500*	1.446*	1.365*	1.295*
												Vel (f/s)	1.92	1.92	1.92	1.99	2.11	2.22
												R (Hrs)	1.016	1.016	1.016	0.976	0.915	0.864
PE75	1.007	2.01	15.0	15.0	Urban	0.074	0.24	0.15	8.00	0.07	33	Tc (Hrs)	1.500*	1.500*	1.500*	1.500*	1.484*	1.409*
												Vel (f/s)	1.97	1.97	1.97	1.97	1.99	2.09
												R (Hrs)	1.010	1.010	1.010	1.010	0.998	0.943

* Non default value or value out of range

Area ID	Sub Basin Parameters: Area (sq mi)	Length (mi)	Slope (ft/mi)	Adj Slope	Time-Area	Kb	Rainfall Losses: IA (in)	DTHETA	PSIF (in)	XKSAT (in/hr)	RTIMP (%)		Return Period Parameters: 2 Yr	5 Yr	10 Yr	25 Yr	50 Yr	100 Yr
Major Basin ID: MV																		
PE83	1.000	2.00	13.0	13.0	Urban	0.074	0.24	0.13	10.10	0.03	34	Tc (Hrs)	1.500*	1.500*	1.500*	1.500*	1.500*	1.445*
												Vel (f/s)	1.96	1.96	1.96	1.96	1.96	2.03
												R (Hrs)	1.010	1.010	1.010	1.010	1.010	0.969
PE91	0.509	1.00	19.2	19.2	Urban	0.069	0.21	0.16	9.70	0.04	45	Tc (Hrs)	1.045*	1.045*	1.023*	0.942*	0.894	0.852
												Vel (f/s)	1.40	1.40	1.43	1.56	1.64	1.72
												R (Hrs)	0.571	0.571	0.557	0.509	0.480	0.455
PELO	0.271	1.07	18.6	18.6	Urban	0.085	0.19	0.24	6.40	0.13	39	Tc (Hrs)	1.301*	1.301*	1.268*	1.150*	1.083*	1.024*
												Vel (f/s)	1.21	1.21	1.24	1.36	1.45	1.53
												R (Hrs)	1.101	1.101	1.070	0.961	0.898	0.844
RI07	0.759	1.52	11.5	11.5	Urban	0.054	0.41	0.15	8.80	0.08	12	Tc (Hrs)	1.500*	1.500*	1.498*	1.330*	1.236*	1.160*
												Vel (f/s)	1.49	1.49	1.49	1.68	1.80	1.92
												R (Hrs)	0.949	0.949	0.948	0.830	0.766	0.714
RIAF	0.659	2.07	4.8	4.8	Urban	0.059	0.22	0.18	6.60	0.13	41	Tc (Hrs)	1.500*	1.500*	1.500*	1.500*	1.500*	1.500*
												Vel (f/s)	2.02	2.02	2.02	2.02	2.02	2.02
												R (Hrs)	1.317	1.317	1.317	1.317	1.317	1.317
TB67	0.265	0.72	24.5	24.5	Urban	0.071	0.23	0.16	9.70	0.05	17	Tc (Hrs)	0.871	0.871	0.849	0.772	0.729	0.692
												Vel (f/s)	1.21	1.21	1.24	1.37	1.45	1.53
												R (Hrs)	0.520	0.520	0.506	0.455	0.427	0.403
TB75	1.026	1.55	19.0	19.0	Urban	0.074	0.23	0.15	7.00	0.10	32	Tc (Hrs)	1.465*	1.465*	1.427*	1.298*	1.224*	1.160*
												Vel (f/s)	1.55	1.55	1.59	1.75	1.86	1.96
												R (Hrs)	0.791	0.791	0.768	0.692	0.648	0.611
TB83	0.994	2.01	16.7	16.7	Urban	0.074	0.25	0.21	6.40	0.14	31	Tc (Hrs)	1.500*	1.500*	1.500*	1.500*	1.494*	1.408*
												Vel (f/s)	1.97	1.97	1.97	1.97	1.97	2.09
												R (Hrs)	1.018	1.018	1.018	1.018	1.013	0.949
TBLO	0.099	0.88	14.7	14.7	Urban	0.056	0.15	0.15	8.80	0.05	71	Tc (Hrs)	0.929*	0.929*	0.911	0.845	0.804	0.768
												Vel (f/s)	1.39	1.39	1.42	1.53	1.61	1.68
												R (Hrs)	1.150	1.150	1.125	1.035	0.980	0.931

* Non default value or value out of range

Area ID	Sub Basin Parameters: Area (sq mi)	Length (mi)	Slope (ft/mi)	Adj Slope	Time-Area	Kb	Rainfall Losses: IA (in)	DTHETA	PSIF (in)	XKSAT (in/hr)	RTIMP (%)		Return Period Parameters: 2 Yr	5 Yr	10 Yr	25 Yr	50 Yr	100 Yr
Major Basin ID: MV																		
TM07	0.265	0.97	6.2	6.2	Urban	0.088	0.29	0.16	9.70	0.05	13	Tc (Hrs)	1.500*	1.500*	1.500*	1.500*	1.460*	1.383*
												Vel (f/s)	0.95	0.95	0.95	0.95	0.97	1.03
												R (Hrs)	1.207	1.207	1.207	1.207	1.172	1.103
TM35	0.393	0.97	22.1	22.1	Urban	0.034	0.14	0.15	7.60	0.08	80	Tc (Hrs)	0.662	0.662	0.649	0.603	0.574	0.548
												Vel (f/s)	2.15	2.15	2.19	2.36	2.48	2.60
												R (Hrs)	0.389	0.389	0.381	0.350	0.332	0.315
TM43	0.636	1.58	10.9	10.9	Urban	0.080	0.23	0.15	8.80	0.05	37	Tc (Hrs)	1.500*	1.500*	1.500*	1.500*	1.469*	1.398*
												Vel (f/s)	1.54	1.54	1.54	1.54	1.58	1.66
												R (Hrs)	1.083	1.083	1.083	1.083	1.058	1.001
TM51	0.545	1.55	10.2	10.2	Urban	0.080	0.24	0.19	6.60	0.13	33	Tc (Hrs)	1.500*	1.500*	1.500*	1.500*	1.500*	1.449*
												Vel (f/s)	1.52	1.52	1.52	1.52	1.52	1.57
												R (Hrs)	1.165	1.165	1.165	1.165	1.165	1.121
TM59	0.599	1.53	13.0	13.0	Urban	0.072	0.24	0.21	6.60	0.13	31	Tc (Hrs)	1.500*	1.500*	1.500*	1.442*	1.353*	1.276*
												Vel (f/s)	1.50	1.50	1.50	1.56	1.66	1.76
												R (Hrs)	1.092	1.092	1.092	1.045	0.974	0.913
TM67	0.813	1.71	13.4	13.4	Urban	0.074	0.24	0.15	8.00	0.07	36	Tc (Hrs)	1.500*	1.500*	1.500*	1.482*	1.402*	1.332*
												Vel (f/s)	1.67	1.67	1.67	1.69	1.79	1.88
												R (Hrs)	1.003	1.003	1.003	0.990	0.930	0.879
TM75	0.997	2.00	13.7	13.7	Urban	0.060	0.23	0.15	9.70	0.04	41	Tc (Hrs)	1.500*	1.500*	1.500*	1.415*	1.343*	1.278*
												Vel (f/s)	1.96	1.96	1.96	2.07	2.18	2.30
												R (Hrs)	1.012	1.012	1.012	0.949	0.895	0.847
TM83	0.992	1.99	13.7	13.7	Urban	0.072	0.24	0.15	7.30	0.10	34	Tc (Hrs)	1.500*	1.500*	1.500*	1.500*	1.500*	1.432*
												Vel (f/s)	1.95	1.95	1.95	1.95	1.95	2.04
												R (Hrs)	1.011	1.011	1.011	1.011	1.011	0.960
TM91	1.003	2.00	13.6	13.6	Urban	0.073	0.24	0.15	7.30	0.09	36	Tc (Hrs)	1.500*	1.500*	1.500*	1.500*	1.500*	1.443*
												Vel (f/s)	1.96	1.96	1.96	1.96	1.96	2.03
												R (Hrs)	1.009	1.009	1.009	1.009	1.009	0.966

* Non default value or value out of range

Area ID	Sub Basin Parameters: Area (sq mi)	Length (mi)	Slope (ft/mi)	Adj Slope	Time-Area	Kb	Rainfall Losses: IA (in)	DTHETA	PSIF (in)	XKSAT (in/hr)	RTIMP (%)		Return Period Parameters: 2 Yr	5 Yr	10 Yr	25 Yr	50 Yr	100 Yr
Major Basin ID: MV																		
TM99	0.505	1.50	6.7	6.7	Urban	0.044	0.46	0.15	8.80	0.09	8	Tc (Hrs)	1.500*	1.500*	1.500*	1.419*	1.315*	1.228*
												Vel (ft/s)	1.47	1.47	1.47	1.55	1.67	1.79
												R (Hrs)	1.185	1.185	1.185	1.114	1.024	0.949
TMAF	0.762	2.06	10.5	10.5	Urban	0.068	0.22	0.16	6.80	0.11	38	Tc (Hrs)	1.500*	1.500*	1.500*	1.500*	1.500*	1.500*
												Vel (ft/s)	2.01	2.01	2.01	2.01	2.01	2.01
												R (Hrs)	1.208	1.208	1.208	1.208	1.208	1.208
TMLO	0.496	1.50	10.1	10.1	Urban	0.046	0.45	0.15	8.80	0.09	8	Tc (Hrs)	1.493*	1.493*	1.442*	1.275*	1.182*	1.104*
												Vel (ft/s)	1.47	1.47	1.53	1.73	1.86	1.99
												R (Hrs)	1.191	1.191	1.146	0.999	0.919	0.852
TMRI	0.240	0.49	14.0	14.0	Urban	0.038	0.30	0.15	9.70	0.07	2	Tc (Hrs)	0.660	0.660	0.640	0.572	0.534	0.503
												Vel (ft/s)	1.09	1.09	1.12	1.26	1.35	1.43
												R (Hrs)	0.298	0.298	0.288	0.254	0.235	0.220

* Non default value or value out of range

Future Subbasin Data

Area ID	Sub Basin Parameters: Area (sq mi)	Length (mi)	Slope (ft/mi)	Adj Slope	Time-Area	Kb	Rainfall Losses: IA (in)	DTHETA	PSIF (in)	XKSAT (in/hr)	RTIMP (%)		Return Period Parameters: 2 Yr	5 Yr	10 Yr	25 Yr	50 Yr	100 Yr
Major Basin ID: MV																		
BH27	0.258	1.00	22.0	22.0	Urban	0.067	0.21	0.25	4.80	0.25	55	Tc (Hrs)	1.042*	1.042*	1.019*	0.935*	0.881	0.834
												Vel (f/s)	1.41	1.41	1.44	1.57	1.66	1.76
												R (Hrs)	0.838	0.838	0.818	0.743	0.696	0.654
BH35	1.005	1.00	20.5	20.5	Urban	0.070	0.23	0.25	5.20	0.22	37	Tc (Hrs)	1.209*	1.209*	1.174*	1.051*	0.980*	0.922*
												Vel (f/s)	1.21	1.21	1.25	1.40	1.50	1.59
												R (Hrs)	0.456	0.456	0.441	0.390	0.361	0.337
BH43	0.993	2.00	13.4	13.4	Urban	0.069	0.23	0.25	5.20	0.24	32	Tc (Hrs)	1.500*	1.500*	1.500*	1.500*	1.500*	1.498*
												Vel (f/s)	1.96	1.96	1.96	1.96	1.96	1.96
												R (Hrs)	1.014	1.014	1.014	1.014	1.014	1.013
BH51	0.995	2.03	10.9	10.9	Urban	0.066	0.22	0.23	6.20	0.15	43	Tc (Hrs)	1.500*	1.500*	1.500*	1.500*	1.500*	1.500*
												Vel (f/s)	1.98	1.98	1.98	1.98	1.98	1.98
												R (Hrs)	1.025	1.025	1.025	1.025	1.025	1.025
BH59	0.493	1.00	13.1	13.1	Urban	0.034	0.16	0.25	5.00	0.23	71	Tc (Hrs)	0.824	0.824	0.807	0.745	0.706	0.671
												Vel (f/s)	1.78	1.78	1.82	1.97	2.08	2.19
												R (Hrs)	0.446	0.446	0.436	0.399	0.376	0.356
BH67	0.971	1.97	14.0	14.0	Urban	0.072	0.23	0.25	5.60	0.19	40	Tc (Hrs)	1.500*	1.500*	1.500*	1.500*	1.500*	1.459*
												Vel (f/s)	1.93	1.93	1.93	1.93	1.93	1.98
												R (Hrs)	1.015	1.015	1.015	1.015	1.015	0.985
BH75	1.003	2.00	13.9	13.9	Urban	0.073	0.24	0.15	9.70	0.04	37	Tc (Hrs)	1.500*	1.500*	1.500*	1.500*	1.485*	1.413*
												Vel (f/s)	1.96	1.96	1.96	1.96	1.98	2.08
												R (Hrs)	1.009	1.009	1.009	1.009	0.997	0.944
BH83	0.998	2.01	13.8	13.8	Urban	0.061	0.22	0.15	7.60	0.09	31	Tc (Hrs)	1.500*	1.500*	1.500*	1.471*	1.388*	1.316*
												Vel (f/s)	1.97	1.97	1.97	2.00	2.12	2.24
												R (Hrs)	1.016	1.016	1.016	0.994	0.931	0.879
BH91	1.032	2.10	12.9	12.9	Urban	0.068	0.23	0.15	7.60	0.09	28	Tc (Hrs)	1.500*	1.500*	1.500*	1.500*	1.500*	1.460*
												Vel (f/s)	2.05	2.05	2.05	2.05	2.05	2.11
												R (Hrs)	1.032	1.032	1.032	1.032	1.032	1.001

* Non default value or value out of range

Area ID	Sub Basin Parameters: Area (sq mi)	Length (mi)	Slope (ft/mi)	Adj Slope	Time-Area	Kb	Rainfall Losses: IA (in)	DTHETA	PSIF (in)	XKSAT (in/hr)	RTIMP (%)		Return Period Parameters: 2 Yr	5 Yr	10 Yr	25 Yr	50 Yr	100 Yr
Major Basin ID: MV																		
BH99	0.184	1.10	9.1	9.1	Urban	0.077	0.10	0.19	6.60	0.12	78	Tc (Hrs)	1.431*	1.431*	1.403*	1.300*	1.237*	1.180*
												Vel (f/s)	1.13	1.13	1.15	1.24	1.30	1.37
												R (Hrs)	1.560	1.560	1.526	1.402	1.327	1.260
BHLO	0.788	1.75	10.8	10.8	Urban	0.023	0.10	0.15	7.30	0.09	81	Tc (Hrs)	0.921*	0.921*	0.903	0.839	0.799	0.763
												Vel (f/s)	2.79	2.79	2.84	3.06	3.21	3.36
												R (Hrs)	0.605	0.605	0.592	0.546	0.517	0.491
BHNR	0.258	0.75	10.7	10.7	Urban	0.095	0.10	0.25	6.20	0.14	71	Tc (Hrs)	1.278*	1.278*	1.252*	1.156*	1.097*	1.045*
												Vel (f/s)	0.86	0.86	0.88	0.95	1.00	1.05
												R (Hrs)	0.836	0.836	0.817	0.747	0.705	0.668
BHRI	0.512	1.39	13.4	13.4	Urban	0.086	0.10	0.24	6.20	0.14	77	Tc (Hrs)	1.500*	1.500*	1.497*	1.385*	1.316*	1.255*
												Vel (f/s)	1.36	1.36	1.36	1.47	1.55	1.62
												R (Hrs)	1.106	1.106	1.103	1.012	0.957	0.907
CB07	0.317	0.99	7.3	7.3	Urban	0.092	0.29	0.26	6.00	0.21	6	Tc (Hrs)	1.500*	1.500*	1.500*	1.500*	1.500*	1.500*
												Vel (f/s)	0.97	0.97	0.97	0.97	0.97	0.97
												R (Hrs)	1.108	1.108	1.108	1.108	1.108	1.108
CB27	0.262	1.01	17.9	17.9	Urban	0.062	0.20	0.25	5.10	0.22	54	Tc (Hrs)	1.070*	1.070*	1.047*	0.958*	0.903	0.855
												Vel (f/s)	1.38	1.38	1.41	1.55	1.64	1.73
												R (Hrs)	0.863	0.863	0.842	0.763	0.715	0.673
CB35	1.000	2.00	11.2	11.2	Urban	0.062	0.24	0.25	5.00	0.25	39	Tc (Hrs)	1.500*	1.500*	1.500*	1.500*	1.500*	1.483*
												Vel (f/s)	1.96	1.96	1.96	1.96	1.96	1.98
												R (Hrs)	1.010	1.010	1.010	1.010	1.010	0.997
CB43	0.999	1.00	21.1	21.1	Urban	0.075	0.24	0.25	4.80	0.26	35	Tc (Hrs)	1.270*	1.270*	1.233*	1.100*	1.023*	0.959*
												Vel (f/s)	1.15	1.15	1.19	1.33	1.43	1.53
												R (Hrs)	0.483	0.483	0.467	0.411	0.380	0.353
CB51	0.483	0.98	24.9	24.9	Urban	0.024	0.15	0.25	5.00	0.23	80	Tc (Hrs)	0.546	0.546	0.536	0.496	0.471	0.449
												Vel (f/s)	2.63	2.63	2.68	2.90	3.05	3.20
												R (Hrs)	0.282	0.282	0.276	0.253	0.239	0.227

* Non default value or value out of range

Area ID	Sub Basin Parameters: Area (sq mi)	Length (mi)	Slope (ft/mi)	Adj Slope	Time-Area	Kb	Rainfall Losses: IA (in)	DTHETA	PSIF (in)	XKSAT (in/hr)	RTIMP (%)		Return Period Parameters: 2 Yr	5 Yr	10 Yr	25 Yr	50 Yr	100 Yr
Major Basin ID: MV																		
CB59	1.010	2.02	14.4	14.4	Urban	0.038	0.16	0.25	5.10	0.22	72	Tc (Hrs)	1.243*	1.243*	1.216*	1.118*	1.059*	1.007*
												Vel (f/s)	2.38	2.38	2.44	2.65	2.80	2.94
												R (Hrs)	0.822	0.822	0.802	0.731	0.688	0.651
CB67	0.970	1.97	14.7	14.7	Urban	0.073	0.24	0.15	7.60	0.08	36	Tc (Hrs)	1.500*	1.500*	1.500*	1.500*	1.467*	1.393*
												Vel (f/s)	1.93	1.93	1.93	1.93	1.97	2.07
												R (Hrs)	1.016	1.016	1.016	1.016	0.991	0.936
CB75	0.998	2.00	13.4	13.4	Urban	0.075	0.24	0.15	7.30	0.10	33	Tc (Hrs)	1.500*	1.500*	1.500*	1.500*	1.500*	1.478*
												Vel (f/s)	1.96	1.96	1.96	1.96	1.96	1.98
												R (Hrs)	1.012	1.012	1.012	1.012	1.012	0.995
CB83	0.554	1.02	20.7	20.7	Urban	0.083	0.27	0.15	8.00	0.08	20	Tc (Hrs)	1.220*	1.220*	1.187*	1.074*	1.009*	0.955*
												Vel (f/s)	1.23	1.23	1.26	1.39	1.48	1.57
												R (Hrs)	0.656	0.656	0.636	0.569	0.531	0.500
CB91	0.961	1.95	14.4	14.4	Urban	0.076	0.25	0.15	8.80	0.06	28	Tc (Hrs)	1.500*	1.500*	1.500*	1.500*	1.500*	1.424*
												Vel (f/s)	1.91	1.91	1.91	1.91	1.91	2.01
												R (Hrs)	1.013	1.013	1.013	1.013	1.013	0.956
CB99	0.201	1.18	14.5	14.5	Urban	0.069	0.10	0.15	7.30	0.09	79	Tc (Hrs)	1.202*	1.202*	1.179*	1.094*	1.042*	0.995*
												Vel (f/s)	1.44	1.44	1.47	1.58	1.66	1.74
												R (Hrs)	1.293	1.293	1.265	1.165	1.104	1.048
CBLO	0.818	1.82	13.2	13.2	Urban	0.052	0.18	0.15	8.80	0.06	53	Tc (Hrs)	1.390*	1.390*	1.360*	1.254*	1.190*	1.134*
												Vel (f/s)	1.92	1.92	1.96	2.13	2.24	2.35
												R (Hrs)	0.965	0.965	0.942	0.861	0.813	0.770
CBNR	0.466	1.72	11.1	11.1	Urban	0.048	0.13	0.28	5.80	0.24	5	Tc (Hrs)	1.500*	1.500*	1.500*	1.460*	1.345*	1.247*
												Vel (f/s)	1.68	1.68	1.68	1.73	1.88	2.02
												R (Hrs)	1.384	1.384	1.384	1.343	1.226	1.127
CBRI	0.698	2.02	12.4	12.4	Urban	0.082	0.24	0.15	7.00	0.10	36	Tc (Hrs)	1.500*	1.500*	1.500*	1.500*	1.500*	1.500*
												Vel (f/s)	1.98	1.98	1.98	1.98	1.98	1.98
												R (Hrs)	1.250	1.250	1.250	1.250	1.250	1.250

* Non default value or value out of range

Area ID	Sub Basin Parameters: Area (sq mi)	Length (mi)	Slope (ft/mi)	Adj Slope	Time-Area	Kb	Rainfall Losses: IA (in)	DTHETA	PSIF (in)	XKSAT (in/hr)	RTIMP (%)		Return Period Parameters: 2 Yr	5 Yr	10 Yr	25 Yr	50 Yr	100 Yr
Major Basin ID: MV																		
CT59	0.296	0.90	20.7	20.7	Urban	0.082	0.24	0.15	8.80	0.06	30	Tc (Hrs)	1.093*	1.093*	1.066*	0.974*	0.920*	0.874
												Vel (f/s)	1.21	1.21	1.24	1.36	1.43	1.51
												R (Hrs)	0.751	0.751	0.731	0.661	0.621	0.586
CT67	0.910	1.62	23.5	23.5	Urban	0.072	0.26	0.15	7.30	0.11	28	Tc (Hrs)	1.408*	1.408*	1.369*	1.238*	1.163*	1.099*
												Vel (f/s)	1.69	1.69	1.74	1.92	2.04	2.16
												R (Hrs)	0.840	0.840	0.814	0.728	0.679	0.638
CT75	1.003	2.00	17.1	17.1	Urban	0.078	0.26	0.15	8.80	0.06	27	Tc (Hrs)	1.500*	1.500*	1.500*	1.500*	1.465*	1.390*
												Vel (f/s)	1.96	1.96	1.96	1.96	2.00	2.11
												R (Hrs)	1.009	1.009	1.009	1.009	0.982	0.927
CT83	1.008	2.01	16.8	16.8	Urban	0.078	0.25	0.15	8.40	0.06	30	Tc (Hrs)	1.500*	1.500*	1.500*	1.500*	1.471*	1.397*
												Vel (f/s)	1.97	1.97	1.97	1.97	2.00	2.11
												R (Hrs)	1.010	1.010	1.010	1.010	0.988	0.933
CTLO	0.865	2.26	21.3	21.3	Urban	0.070	0.20	0.15	7.30	0.09	47	Tc (Hrs)	1.500*	1.500*	1.500*	1.428*	1.353*	1.287*
												Vel (f/s)	2.21	2.21	2.21	2.32	2.45	2.58
												R (Hrs)	1.210	1.210	1.210	1.146	1.079	1.021
GC35	0.077	0.37	17.4	17.4	Urban	0.029	0.15	0.25	4.25	0.35	80	Tc (Hrs)	0.415	0.415	0.407	0.377	0.359	0.342
												Vel (f/s)	1.31	1.31	1.33	1.44	1.51	1.59
												R (Hrs)	0.271	0.271	0.266	0.244	0.231	0.219
GC43	0.370	1.47	6.9	6.9	Urban	0.025	0.15	0.25	6.00	0.15	80	Tc (Hrs)	1.011*	1.011*	0.991*	0.918*	0.873	0.832
												Vel (f/s)	2.13	2.13	2.18	2.35	2.47	2.59
												R (Hrs)	0.899	0.899	0.879	0.807	0.763	0.724
GC51	0.448	1.44	7.7	7.7	Urban	0.081	0.24	0.25	5.00	0.24	36	Tc (Hrs)	1.500*	1.500*	1.500*	1.500*	1.500*	1.500*
												Vel (f/s)	1.41	1.41	1.41	1.41	1.41	1.41
												R (Hrs)	1.228	1.228	1.228	1.228	1.228	1.228
GC59	0.410	1.21	12.3	12.3	Urban	0.056	0.24	0.23	6.20	0.16	42	Tc (Hrs)	1.279*	1.279*	1.248*	1.132*	1.064*	1.005*
												Vel (f/s)	1.39	1.39	1.42	1.57	1.67	1.77
												R (Hrs)	0.941	0.941	0.916	0.822	0.767	0.720

* Non default value or value out of range

Area ID	Sub Basin Parameters: Area (sq mi)	Length (mi)	Slope (ft/mi)	Adj Slope	Time-Area	Kb	Rainfall Losses: IA (in)	DTHETA	PSIF (in)	XKSAT (in/hr)	RTIMP (%)		Return Period Parameters: 2 Yr	5 Yr	10 Yr	25 Yr	50 Yr	100 Yr
Major Basin ID: MV																		
GC67	0.936	1.73	12.8	12.8	Urban	0.061	0.21	0.15	7.30	0.11	28	Tc (Hrs)	1.500*	1.500*	1.500*	1.410*	1.327*	1.256*
												Vel (f/s)	1.69	1.69	1.69	1.80	1.91	2.02
												R (Hrs)	0.934	0.934	0.934	0.872	0.815	0.767
GC75	0.410	1.86	6.9	6.9	Urban	0.085	0.24	0.15	8.00	0.07	33	Tc (Hrs)	1.500*	1.500*	1.500*	1.500*	1.500*	1.500*
												Vel (f/s)	1.82	1.82	1.82	1.82	1.82	1.82
												R (Hrs)	1.585	1.585	1.585	1.585	1.585	1.585
GC83	0.426	2.12	7.3	7.3	Urban	0.076	0.23	0.15	8.40	0.07	30	Tc (Hrs)	1.500*	1.500*	1.500*	1.500*	1.500*	1.500*
												Vel (f/s)	2.07	2.07	2.07	2.07	2.07	2.07
												R (Hrs)	1.722	1.722	1.722	1.722	1.722	1.722
GCGR	0.376	0.33	35.7	35.7	Urban	0.034	0.15	0.25	5.00	0.23	77	Tc (Hrs)	0.342	0.342	0.335	0.310	0.294*	0.280*
												Vel (f/s)	1.42	1.42	1.44	1.56	1.65	1.73
												R (Hrs)	0.081	0.081	0.079	0.073	0.068	0.065
GL27	0.258	1.00	22.0	22.0	Urban	0.086	0.23	0.17	6.80	0.11	45	Tc (Hrs)	1.163*	1.163*	1.135*	1.037*	0.980*	0.930*
												Vel (f/s)	1.26	1.26	1.29	1.41	1.50	1.58
												R (Hrs)	0.947	0.947	0.922	0.834	0.783	0.739
GL35	1.004	2.01	10.5	10.5	Urban	0.073	0.23	0.23	6.20	0.15	34	Tc (Hrs)	1.500*	1.500*	1.500*	1.500*	1.500*	1.500*
												Vel (f/s)	1.97	1.97	1.97	1.97	1.97	1.97
												R (Hrs)	1.012	1.012	1.012	1.012	1.012	1.012
GL43	0.998	1.99	14.6	14.6	Urban	0.071	0.24	0.15	7.30	0.09	36	Tc (Hrs)	1.500*	1.500*	1.500*	1.500*	1.462*	1.388*
												Vel (f/s)	1.95	1.95	1.95	1.95	2.00	2.10
												R (Hrs)	1.007	1.007	1.007	1.007	0.979	0.924
GL51	1.002	2.00	12.0	12.0	Urban	0.069	0.23	0.25	5.40	0.20	42	Tc (Hrs)	1.500*	1.500*	1.500*	1.500*	1.500*	1.500*
												Vel (f/s)	1.96	1.96	1.96	1.96	1.96	1.96
												R (Hrs)	1.009	1.009	1.009	1.009	1.009	1.009
GL59	1.015	2.03	15.1	15.1	Urban	0.060	0.20	0.25	5.20	0.22	47	Tc (Hrs)	1.500*	1.500*	1.500*	1.479*	1.388*	1.310*
												Vel (f/s)	1.98	1.98	1.98	2.01	2.15	2.27
												R (Hrs)	1.014	1.014	1.014	0.998	0.930	0.872

* Non default value or value out of range

Area ID	Sub Basin Parameters: Area (sq mi)	Length (mi)	Slope (ft/mi)	Adj Slope	Time-Area	Kb	Rainfall Losses: IA (in)	DTHETA	PSIF (in)	XKSAT (in/hr)	RTIMP (%)		Return Period Parameters: 2 Yr	5 Yr	10 Yr	25 Yr	50 Yr	100 Yr
Major Basin ID: MV																		
GL67	0.359	0.96	20.4	20.4	Urban	0.045	0.19	0.25	5.40	0.19	63	Tc (Hrs)	0.826	0.826	0.809	0.743	0.703	0.667
												Vel (f/s)	1.70	1.70	1.74	1.90	2.00	2.11
												R (Hrs)	0.520	0.520	0.507	0.462	0.434	0.410
GL75	0.499	1.50	15.0	15.0	Urban	0.081	0.24	0.15	8.80	0.05	46	Tc (Hrs)	1.500*	1.500*	1.476*	1.357*	1.287*	1.226*
												Vel (f/s)	1.47	1.47	1.49	1.62	1.71	1.79
												R (Hrs)	1.193	1.193	1.172	1.067	1.007	0.953
GL83	0.495	1.49	17.5	17.5	Urban	0.082	0.25	0.15	7.00	0.11	31	Tc (Hrs)	1.500*	1.500*	1.485*	1.348*	1.269*	1.202*
												Vel (f/s)	1.46	1.46	1.47	1.62	1.72	1.82
												R (Hrs)	1.192	1.192	1.179	1.059	0.990	0.932
GL91	0.979	1.99	12.2	12.2	Urban	0.070	0.25	0.17	6.80	0.12	34	Tc (Hrs)	1.500*	1.500*	1.500*	1.500*	1.500*	1.475*
												Vel (f/s)	1.95	1.95	1.95	1.95	1.95	1.98
												R (Hrs)	1.019	1.019	1.019	1.019	1.019	1.000
GLLO	0.848	1.81	16.0	16.0	Urban	0.077	0.10	0.19	6.60	0.12	80	Tc (Hrs)	1.500*	1.500*	1.500*	1.428*	1.359*	1.297*
												Vel (f/s)	1.77	1.77	1.77	1.86	1.95	2.05
												R (Hrs)	1.025	1.025	1.025	0.970	0.918	0.872
GLNR	0.483	1.86	13.9	13.9	Urban	0.077	0.10	0.21	6.40	0.13	76	Tc (Hrs)	1.500*	1.500*	1.500*	1.491*	1.418*	1.352*
												Vel (f/s)	1.82	1.82	1.82	1.83	1.92	2.02
												R (Hrs)	1.444	1.444	1.444	1.434	1.356	1.286
GR27	0.407	0.91	23.7	23.7	Urban	0.045	0.18	0.15	8.40	0.06	66	Tc (Hrs)	0.735	0.735	0.720	0.666	0.634	0.604
												Vel (f/s)	1.82	1.82	1.85	2.00	2.11	2.21
												R (Hrs)	0.407	0.407	0.398	0.365	0.345	0.328
GR35	0.531	1.05	20.8	20.8	Urban	0.057	0.20	0.25	4.80	0.26	51	Tc (Hrs)	1.017*	1.017*	0.994*	0.909	0.855	0.808
												Vel (f/s)	1.51	1.51	1.55	1.69	1.80	1.91
												R (Hrs)	0.562	0.562	0.548	0.497	0.464	0.436
GR43	0.514	1.01	24.0	24.0	Urban	0.060	0.21	0.25	4.90	0.24	51	Tc (Hrs)	0.975*	0.975*	0.953*	0.872	0.820	0.775
												Vel (f/s)	1.52	1.52	1.55	1.70	1.81	1.91
												R (Hrs)	0.530	0.530	0.517	0.468	0.437	0.411

* Non default value or value out of range

Area ID	Sub Basin Parameters: Area (sq mi)	Length (mi)	Slope (ft/mi)	Adj Slope	Time-Area	Kb	Rainfall Losses: IA (in)	DTHETA	PSIF (in)	XKSAT (in/hr)	RTIMP (%)		Return Period Parameters: 2 Yr	5 Yr	10 Yr	25 Yr	50 Yr	100 Yr
Major Basin ID: MV																		
GR59	0.518	0.99	29.4	29.4	Urban	0.045	0.16	0.25	4.80	0.25	62	Tc (Hrs)	0.757	0.757	0.741	0.681	0.644	0.611
												Vel (f/s)	1.92	1.92	1.96	2.13	2.25	2.38
												R (Hrs)	0.392	0.392	0.383	0.349	0.327	0.309
GR67	0.497	0.99	15.5	15.5	Urban	0.049	0.16	0.15	7.60	0.09	44	Tc (Hrs)	0.946*	0.946*	0.925*	0.849	0.804	0.765
												Vel (f/s)	1.53	1.53	1.57	1.71	1.81	1.90
												R (Hrs)	0.514	0.514	0.501	0.456	0.429	0.406
GR75	0.496	0.98	16.5	16.5	Urban	0.067	0.21	0.15	8.80	0.05	55	Tc (Hrs)	1.060*	1.060*	1.038*	0.957*	0.910	0.867
												Vel (f/s)	1.36	1.36	1.38	1.50	1.58	1.66
												R (Hrs)	0.579	0.579	0.566	0.517	0.489	0.463
GR83	0.468	0.98	14.3	14.3	Urban	0.067	0.17	0.13	10.10	0.03	58	Tc (Hrs)	1.089*	1.089*	1.068*	0.990*	0.942*	0.899
												Vel (f/s)	1.32	1.32	1.35	1.45	1.53	1.60
												R (Hrs)	0.617	0.617	0.604	0.555	0.525	0.499
GR91	0.514	0.94	13.4	13.4	Urban	0.071	0.23	0.13	10.10	0.03	40	Tc (Hrs)	1.143*	1.143*	1.118*	1.032*	0.980*	0.934*
												Vel (f/s)	1.21	1.21	1.23	1.34	1.41	1.48
												R (Hrs)	0.597	0.597	0.582	0.533	0.503	0.477
GW83	0.291	1.34	23.8	23.8	Urban	0.088	0.25	0.25	4.70	0.28	30	Tc (Hrs)	1.481*	1.481*	1.443*	1.305*	1.219*	1.142*
												Vel (f/s)	1.33	1.33	1.36	1.51	1.61	1.72
												R (Hrs)	1.461	1.461	1.420	1.270	1.178	1.095
IN07	0.256	1.27	21.6	21.6	Urban	0.027	0.10	0.15	8.40	0.06	83	Tc (Hrs)	0.672	0.672	0.659	0.613	0.584	0.558
												Vel (f/s)	2.77	2.77	2.83	3.04	3.19	3.34
												R (Hrs)	0.626	0.626	0.613	0.566	0.536	0.510
IN27	0.105	0.63	14.4	14.4	Urban	0.029	0.14	0.25	5.60	0.18	80	Tc (Hrs)	0.570	0.570	0.559	0.517	0.492	0.469
												Vel (f/s)	1.62	1.62	1.65	1.79	1.88	1.97
												R (Hrs)	0.495	0.495	0.484	0.444	0.420	0.398
IN35	0.242	0.20	12.1	12.1	Urban	0.048	0.17	0.13	10.10	0.03	64	Tc (Hrs)	0.433	0.433	0.425	0.395	0.376	0.359
												Vel (f/s)	0.68	0.68	0.69	0.74	0.78	0.82
												R (Hrs)	0.091	0.091	0.089	0.082	0.077	0.073

* Non default value or value out of range

Area ID	Sub Basin Parameters: Area (sq mi)	Length (mi)	Slope (ft/mi)	Adj Slope	Time-Area	Kb	Rainfall Losses: IA (in)	DTHETA	PSIF (in)	XKSAT (in/hr)	RTIMP (%)		Return Period Parameters: 2 Yr	5 Yr	10 Yr	25 Yr	50 Yr	100 Yr
Major Basin ID: MV																		
IN43	0.256	0.27	9.4	9.4	Urban	0.071	0.20	0.15	9.70	0.04	49	Tc (Hrs)	0.682	0.682	0.667	0.616	0.585	0.558
												Vel (f/s)	0.58	0.58	0.59	0.64	0.68	0.71
												R (Hrs)	0.185	0.185	0.180	0.165	0.156	0.148
IN51	0.232	1.22	15.4	15.4	Urban	0.026	0.12	0.15	9.70	0.04	80	Tc (Hrs)	0.717	0.717	0.703	0.654	0.623	0.595
												Vel (f/s)	2.50	2.50	2.55	2.74	2.87	3.01
												R (Hrs)	0.689	0.689	0.675	0.623	0.590	0.561
IN59	0.202	1.14	9.5	9.5	Urban	0.070	0.19	0.15	9.70	0.04	59	Tc (Hrs)	1.373*	1.373*	1.345*	1.244*	1.184*	1.129*
												Vel (f/s)	1.22	1.22	1.24	1.34	1.41	1.48
												R (Hrs)	1.454	1.454	1.421	1.303	1.233	1.170
IN67	0.197	1.12	6.6	6.6	Urban	0.076	0.20	0.15	9.70	0.04	56	Tc (Hrs)	1.500*	1.500*	1.500*	1.444*	1.373*	1.309*
												Vel (f/s)	1.10	1.10	1.10	1.14	1.20	1.25
												R (Hrs)	1.604	1.604	1.604	1.538	1.454	1.379
IN75	0.199	1.13	8.5	8.5	Urban	0.060	0.17	0.19	6.60	0.12	64	Tc (Hrs)	1.334*	1.334*	1.305*	1.203*	1.141*	1.086*
												Vel (f/s)	1.24	1.24	1.27	1.38	1.45	1.53
												R (Hrs)	1.410	1.410	1.377	1.257	1.185	1.122
IN83	0.196	1.16	10.0	10.0	Urban	0.059	0.18	0.15	7.00	0.10	64	Tc (Hrs)	1.261*	1.261*	1.235*	1.140*	1.083*	1.032*
												Vel (f/s)	1.35	1.35	1.38	1.49	1.57	1.65
												R (Hrs)	1.365	1.365	1.333	1.220	1.152	1.092
IN91	0.185	1.13	25.3	25.3	Urban	0.029	0.11	0.15	9.70	0.04	78	Tc (Hrs)	0.627	0.627	0.615	0.571	0.544	0.520
												Vel (f/s)	2.64	2.64	2.69	2.90	3.05	3.19
												R (Hrs)	0.635	0.635	0.622	0.574	0.544	0.517
INAF	0.472	1.65	16.1	16.1	Urban	0.045	0.15	0.23	6.20	0.18	42	Tc (Hrs)	1.223*	1.223*	1.194*	1.084*	1.020*	0.964*
												Vel (f/s)	1.98	1.98	2.03	2.23	2.37	2.51
												R (Hrs)	1.060	1.060	1.032	0.927	0.866	0.814
INAV	0.235	1.14	25.4	25.4	Urban	0.035	0.10	0.15	8.00	0.07	83	Tc (Hrs)	0.693	0.693	0.680	0.632	0.603	0.576
												Vel (f/s)	2.41	2.41	2.46	2.65	2.77	2.90
												R (Hrs)	0.625	0.625	0.612	0.564	0.535	0.508

* Non default value or value out of range

Area ID	Sub Basin Parameters: Area (sq mi)	Length (mi)	Slope (ft/mi)	Adj Slope	Time-Area	Kb	Rainfall Losses: IA (in)	DTHETA	PSIF (in)	XKSAT (in/hr)	RTIMP (%)		Return Period Parameters: 2 Yr	5 Yr	10 Yr	25 Yr	50 Yr	100 Yr
Major Basin ID: MV																		
INLO	0.147	0.89	25.7	25.7	Urban	0.028	0.10	0.15	9.70	0.04	78	Tc (Hrs)	0.543	0.543	0.533	0.495	0.472	0.451
												Vel (f/s)	2.40	2.40	2.45	2.64	2.77	2.89
												R (Hrs)	0.511	0.511	0.500	0.461	0.437	0.415
IS07	1.021	2.03	10.8	10.8	Urban	0.060	0.21	0.15	8.00	0.08	32	Tc (Hrs)	1.500*	1.500*	1.500*	1.500*	1.487*	1.411*
												Vel (f/s)	1.98	1.98	1.98	1.98	2.00	2.11
												R (Hrs)	1.010	1.010	1.010	1.010	1.000	0.944
IS27	0.239	1.00	9.8	9.8	Urban	0.070	0.20	0.15	7.30	0.09	58	Tc (Hrs)	1.297*	1.297*	1.270*	1.169*	1.110*	1.057*
												Vel (f/s)	1.13	1.13	1.15	1.25	1.32	1.39
												R (Hrs)	1.117	1.117	1.090	0.995	0.939	0.890
IS35	0.990	1.00	20.0	20.0	Urban	0.069	0.24	0.15	7.60	0.09	31	Tc (Hrs)	1.115*	1.115*	1.087*	0.988*	0.931*	0.883
												Vel (f/s)	1.32	1.32	1.35	1.48	1.58	1.66
												R (Hrs)	0.420	0.420	0.408	0.367	0.344	0.324
IS43	0.467	0.93	23.4	23.4	Urban	0.025	0.15	0.25	4.80	0.25	80	Tc (Hrs)	0.554	0.554	0.544	0.504	0.479	0.456
												Vel (f/s)	2.46	2.46	2.51	2.71	2.85	2.99
												R (Hrs)	0.280	0.280	0.274	0.252	0.238	0.225
IS51	0.994	1.99	13.3	13.3	Urban	0.047	0.19	0.25	5.00	0.23	59	Tc (Hrs)	1.468*	1.468*	1.433*	1.306*	1.232*	1.167*
												Vel (f/s)	1.99	1.99	2.04	2.23	2.37	2.50
												R (Hrs)	0.986	0.986	0.960	0.866	0.811	0.764
IS59	1.014	2.01	13.9	13.9	Urban	0.066	0.22	0.25	5.30	0.21	43	Tc (Hrs)	1.500*	1.500*	1.500*	1.500*	1.499*	1.413*
												Vel (f/s)	1.97	1.97	1.97	1.97	1.97	2.09
												R (Hrs)	1.006	1.006	1.006	1.006	1.005	0.942
IS75	0.615	1.29	16.3	16.3	Urban	0.072	0.23	0.15	7.60	0.08	41	Tc (Hrs)	1.319*	1.319*	1.288*	1.179*	1.115*	1.060*
												Vel (f/s)	1.43	1.43	1.47	1.60	1.70	1.78
												R (Hrs)	0.814	0.814	0.793	0.719	0.676	0.639
IS83	0.991	1.98	16.2	16.2	Urban	0.074	0.24	0.17	6.80	0.12	34	Tc (Hrs)	1.500*	1.500*	1.500*	1.500*	1.466*	1.387*
												Vel (f/s)	1.94	1.94	1.94	1.94	1.98	2.09
												R (Hrs)	1.007	1.007	1.007	1.007	0.982	0.924

* Non default value or value out of range

Area ID	Sub Basin Parameters: Area (sq mi)	Length (mi)	Slope (ft/mi)	Adj Slope	Time-Area	Kb	Rainfall Losses: IA (in)	DTHETA	PSIF (in)	XKSAT (in/hr)	RTIMP (%)		Return Period Parameters: 2 Yr	5 Yr	10 Yr	25 Yr	50 Yr	100 Yr
Major Basin ID: MV																		
IS91	0.999	2.00	13.8	13.8	Urban	0.073	0.25	0.15	9.70	0.04	37	Tc (Hrs)	1.500*	1.500*	1.500*	1.500*	1.489*	1.416*
												Vel (f/s)	1.96	1.96	1.96	1.96	1.97	2.07
												R (Hrs)	1.011	1.011	1.011	1.011	1.002	0.948
IS99	0.323	1.20	10.4	10.4	Urban	0.026	0.10	0.15	9.70	0.04	80	Tc (Hrs)	0.803	0.803	0.788	0.732	0.698	0.667
												Vel (f/s)	2.19	2.19	2.23	2.40	2.52	2.64
												R (Hrs)	0.639	0.639	0.626	0.577	0.547	0.520
ISAF	0.989	2.30	10.0	10.0	Urban	0.060	0.22	0.25	4.80	0.25	47	Tc (Hrs)	1.500*	1.500*	1.500*	1.500*	1.500*	1.500*
												Vel (f/s)	2.25	2.25	2.25	2.25	2.25	2.25
												R (Hrs)	1.137	1.137	1.137	1.137	1.137	1.137
ISGC	0.159	1.04	6.7	6.7	Urban	0.093	0.25	0.15	7.00	0.11	32	Tc (Hrs)	1.500*	1.500*	1.500*	1.500*	1.500*	1.439*
												Vel (f/s)	1.02	1.02	1.02	1.02	1.02	1.06
												R (Hrs)	1.708	1.708	1.708	1.708	1.708	1.632
ISLO	0.684	1.51	12.6	12.6	Urban	0.050	0.17	0.15	9.70	0.04	56	Tc (Hrs)	1.233*	1.233*	1.208*	1.117*	1.062*	1.013*
												Vel (f/s)	1.80	1.80	1.83	1.98	2.09	2.19
												R (Hrs)	0.806	0.806	0.788	0.723	0.683	0.648
MD07	0.783	1.55	7.2	7.2	Urban	0.066	0.22	0.15	8.80	0.05	41	Tc (Hrs)	1.500*	1.500*	1.500*	1.500*	1.500*	1.433*
												Vel (f/s)	1.52	1.52	1.52	1.52	1.52	1.59
												R (Hrs)	0.947	0.947	0.947	0.947	0.947	0.900
MD27	0.241	0.97	18.6	18.6	Urban	0.026	0.15	0.15	8.00	0.07	80	Tc (Hrs)	0.606	0.606	0.595	0.552	0.526	0.502
												Vel (f/s)	2.35	2.35	2.39	2.58	2.70	2.83
												R (Hrs)	0.466	0.466	0.456	0.420	0.398	0.378
MD35	0.999	1.97	11.6	11.6	Urban	0.053	0.19	0.13	10.10	0.03	59	Tc (Hrs)	1.499*	1.499*	1.469*	1.362*	1.296*	1.236*
												Vel (f/s)	1.93	1.93	1.97	2.12	2.23	2.34
												R (Hrs)	0.998	0.998	0.976	0.897	0.849	0.806
MD43	0.999	1.00	18.8	18.8	Urban	0.075	0.22	0.15	9.70	0.04	41	Tc (Hrs)	1.132*	1.132*	1.107*	1.018*	0.966*	0.920*
												Vel (f/s)	1.30	1.30	1.32	1.44	1.52	1.59
												R (Hrs)	0.425	0.425	0.414	0.378	0.356	0.337

* Non default value or value out of range

Area ID	Sub Basin Parameters: Area (sq mi)	Length (mi)	Slope (ft/mi)	Adj Slope	Time-Area	Kb	Rainfall Losses: IA (in)	DTHETA	PSIF (in)	XKSAT (in/hr)	RTIMP (%)		Return Period Parameters: 2 Yr	5 Yr	10 Yr	25 Yr	50 Yr	100 Yr
Major Basin ID: MV																		
MD51	1.001	2.00	10.3	10.3	Urban	0.070	0.23	0.15	8.40	0.07	35	Tc (Hrs)	1.500*	1.500*	1.500*	1.500*	1.500*	1.500*
												Vel (f/s)	1.96	1.96	1.96	1.96	1.96	1.96
												R (Hrs)	1.010	1.010	1.010	1.010	1.010	1.010
MD59	1.005	2.00	12.8	12.8	Urban	0.074	0.25	0.15	7.60	0.08	33	Tc (Hrs)	1.500*	1.500*	1.500*	1.500*	1.500*	1.481*
												Vel (f/s)	1.96	1.96	1.96	1.96	1.96	1.98
												R (Hrs)	1.008	1.008	1.008	1.008	1.008	0.993
MD67	0.978	1.98	13.3	13.3	Urban	0.063	0.22	0.15	8.40	0.07	30	Tc (Hrs)	1.500*	1.500*	1.500*	1.489*	1.407*	1.336*
												Vel (f/s)	1.94	1.94	1.94	1.95	2.06	2.17
												R (Hrs)	1.015	1.015	1.015	1.007	0.946	0.893
MD75	1.002	1.99	13.3	13.3	Urban	0.067	0.22	0.15	7.60	0.08	40	Tc (Hrs)	1.500*	1.500*	1.500*	1.500*	1.450*	1.378*
												Vel (f/s)	1.95	1.95	1.95	1.95	2.01	2.12
												R (Hrs)	1.005	1.005	1.005	1.005	0.968	0.915
MD83	0.992	2.01	13.9	13.9	Urban	0.029	0.12	0.15	8.80	0.05	76	Tc (Hrs)	1.038*	1.038*	1.018*	0.946*	0.901	0.860
												Vel (f/s)	2.84	2.84	2.90	3.12	3.27	3.43
												R (Hrs)	0.677	0.677	0.663	0.611	0.578	0.550
MD91	1.007	2.00	12.9	12.9	Urban	0.067	0.22	0.15	8.80	0.05	43	Tc (Hrs)	1.500*	1.500*	1.500*	1.500*	1.452*	1.382*
												Vel (f/s)	1.96	1.96	1.96	1.96	2.02	2.12
												R (Hrs)	1.006	1.006	1.006	1.006	0.971	0.919
MD99	0.319	1.48	7.0	7.0	Urban	0.026	0.10	0.15	9.70	0.04	80	Tc (Hrs)	1.008*	1.008*	0.989*	0.920*	0.876	0.837
												Vel (f/s)	2.15	2.15	2.19	2.36	2.48	2.59
												R (Hrs)	0.980	0.980	0.959	0.885	0.839	0.797
MDAF	0.834	2.30	11.9	11.9	Urban	0.068	0.21	0.26	5.20	0.22	36	Tc (Hrs)	1.500*	1.500*	1.500*	1.500*	1.500*	1.500*
												Vel (f/s)	2.25	2.25	2.25	2.25	2.25	2.25
												R (Hrs)	1.253	1.253	1.253	1.253	1.253	1.253
MDAV	0.954	2.00	7.6	7.6	Urban	0.069	0.21	0.13	7.60	0.08	28	Tc (Hrs)	1.500*	1.500*	1.500*	1.500*	1.500*	1.500*
												Vel (f/s)	1.96	1.96	1.96	1.96	1.96	1.96
												R (Hrs)	1.038	1.038	1.038	1.038	1.038	1.038

* Non default value or value out of range

Area ID	Sub Basin Parameters: Area (sq mi)	Length (mi)	Slope (ft/mi)	Adj Slope	Time-Area	Kb	Rainfall Losses: IA (in)	DTHETA	PSIF (in)	XKSAT (in/hr)	RTIMP (%)		Return Period Parameters: 2 Yr	5 Yr	10 Yr	25 Yr	50 Yr	100 Yr
Major Basin ID: MV																		
MDLO	0.671	1.01	10.9	10.9	Urban	0.064	0.20	0.15	9.70	0.04	48	Tc (Hrs)	1.210*	1.210*	1.184*	1.092*	1.038*	0.989*
												Vel (f/s)	1.22	1.22	1.25	1.36	1.43	1.50
												R (Hrs)	0.578	0.578	0.565	0.516	0.488	0.462
NO27	0.126	1.14	16.6	16.6	Urban	0.045	0.18	0.15	8.80	0.05	63	Tc (Hrs)	0.917*	0.917*	0.898	0.831	0.791	0.754
												Vel (f/s)	1.82	1.82	1.86	2.01	2.11	2.22
												R (Hrs)	1.215	1.215	1.187	1.090	1.031	0.978
NO35	0.991	1.77	11.2	11.2	Urban	0.071	0.24	0.25	5.80	0.17	38	Tc (Hrs)	1.500*	1.500*	1.500*	1.500*	1.500*	1.471*
												Vel (f/s)	1.73	1.73	1.73	1.73	1.73	1.76
												R (Hrs)	0.921	0.921	0.921	0.921	0.921	0.901
NO43	0.995	1.99	15.1	15.1	Urban	0.075	0.24	0.21	6.40	0.14	33	Tc (Hrs)	1.500*	1.500*	1.500*	1.500*	1.500*	1.451*
												Vel (f/s)	1.95	1.95	1.95	1.95	1.95	2.01
												R (Hrs)	1.009	1.009	1.009	1.009	1.009	0.973
NO51	0.993	1.99	14.3	14.3	Urban	0.069	0.24	0.25	6.00	0.16	37	Tc (Hrs)	1.500*	1.500*	1.500*	1.500*	1.500*	1.423*
												Vel (f/s)	1.95	1.95	1.95	1.95	1.95	2.05
												R (Hrs)	1.010	1.010	1.010	1.010	1.010	0.953
NO59	0.992	1.99	15.5	15.5	Urban	0.069	0.23	0.15	7.60	0.09	33	Tc (Hrs)	1.500*	1.500*	1.500*	1.500*	1.418*	1.345*
												Vel (f/s)	1.95	1.95	1.95	1.95	2.06	2.17
												R (Hrs)	1.011	1.011	1.011	1.011	0.950	0.896
NO67	0.956	1.96	14.4	14.4	Urban	0.071	0.22	0.15	8.80	0.05	45	Tc (Hrs)	1.500*	1.500*	1.500*	1.500*	1.427*	1.358*
												Vel (f/s)	1.92	1.92	1.92	1.92	2.01	2.12
												R (Hrs)	1.020	1.020	1.020	1.020	0.965	0.914
NO75	0.506	0.99	16.2	16.2	Urban	0.056	0.10	0.15	8.40	0.06	80	Tc (Hrs)	0.951*	0.951*	0.933*	0.867	0.826	0.789
												Vel (f/s)	1.53	1.53	1.56	1.67	1.76	1.84
												R (Hrs)	0.512	0.512	0.501	0.462	0.438	0.416
NO83	1.005	2.01	17.7	17.7	Urban	0.073	0.10	0.15	8.80	0.05	80	Tc (Hrs)	1.500*	1.500*	1.500*	1.415*	1.348*	1.288*
												Vel (f/s)	1.97	1.97	1.97	2.08	2.19	2.29
												R (Hrs)	1.012	1.012	1.012	0.948	0.899	0.854

* Non default value or value out of range

Area ID	Sub Basin Parameters: Area (sq mi)	Length (mi)	Slope (ft/mi)	Adj Slope	Time-Area	Kb	Rainfall Losses: IA (in)	DTHETA	PSIF (in)	XKSAT (in/hr)	RTIMP (%)		Return Period Parameters: 2 Yr	5 Yr	10 Yr	25 Yr	50 Yr	100 Yr
Major Basin ID: MV																		
NO91	0.993	2.00	14.3	14.3	Urban	0.074	0.24	0.15	8.00	0.07	33	Tc (Hrs)	1.500*	1.500*	1.500*	1.500*	1.500*	1.426*
												Vel (f/s)	1.96	1.96	1.96	1.96	1.96	2.06
												R (Hrs)	1.014	1.014	1.014	1.014	1.014	0.959
NOLO	0.280	1.66	12.3	12.3	Urban	0.026	0.10	0.15	7.30	0.09	84	Tc (Hrs)	0.899	0.899	0.882	0.819	0.781	0.746
												Vel (f/s)	2.71	2.71	2.76	2.97	3.12	3.26
												R (Hrs)	1.019	1.019	0.997	0.919	0.871	0.828
OL35	0.214	1.22	11.4	11.4	Urban	0.027	0.10	0.25	5.40	0.23	58	Tc (Hrs)	0.867	0.867	0.848	0.778	0.735	0.697
												Vel (f/s)	2.06	2.06	2.11	2.30	2.43	2.57
												R (Hrs)	0.891	0.891	0.870	0.791	0.742	0.700
OL43	0.635	1.32	14.1	14.1	Urban	0.080	0.25	0.25	5.40	0.20	33	Tc (Hrs)	1.500*	1.500*	1.500*	1.428*	1.333*	1.253*
												Vel (f/s)	1.29	1.29	1.29	1.36	1.45	1.55
												R (Hrs)	0.939	0.939	0.939	0.889	0.823	0.768
OL51	0.993	2.00	17.9	17.9	Urban	0.070	0.23	0.15	7.30	0.10	36	Tc (Hrs)	1.500*	1.500*	1.500*	1.453*	1.370*	1.300*
												Vel (f/s)	1.96	1.96	1.96	2.02	2.14	2.26
												R (Hrs)	1.014	1.014	1.014	0.979	0.918	0.865
OL59	0.990	1.99	17.1	17.1	Urban	0.074	0.24	0.15	8.80	0.05	34	Tc (Hrs)	1.500*	1.500*	1.500*	1.483*	1.405*	1.336*
												Vel (f/s)	1.95	1.95	1.95	1.97	2.08	2.18
												R (Hrs)	1.012	1.012	1.012	1.000	0.941	0.890
OL67	0.960	1.96	15.3	15.3	Urban	0.053	0.23	0.15	8.40	0.07	36	Tc (Hrs)	1.447*	1.447*	1.412*	1.290*	1.220*	1.159*
												Vel (f/s)	1.99	1.99	2.04	2.23	2.36	2.48
												R (Hrs)	0.978	0.978	0.952	0.861	0.809	0.764
OL75	1.004	2.01	16.2	16.2	Urban	0.071	0.23	0.15	8.80	0.06	32	Tc (Hrs)	1.500*	1.500*	1.500*	1.495*	1.414*	1.344*
												Vel (f/s)	1.97	1.97	1.97	1.97	2.08	2.19
												R (Hrs)	1.012	1.012	1.012	1.009	0.948	0.896
OL83	0.537	1.03	14.1	14.1	Urban	0.071	0.19	0.13	10.10	0.03	53	Tc (Hrs)	1.164*	1.164*	1.141*	1.057*	1.005*	0.958*
												Vel (f/s)	1.30	1.30	1.32	1.43	1.50	1.58
												R (Hrs)	0.639	0.639	0.625	0.574	0.543	0.515

* Non default value or value out of range

Area ID	Sub Basin Parameters: Area (sq mi)	Length (mi)	Slope (ft/mi)	Adj Slope	Time-Area	Kb	Rainfall Losses: IA (in)	DTHETA	PSIF (in)	XKSAT (in/hr)	RTIMP (%)		Return Period Parameters: 2 Yr	5 Yr	10 Yr	25 Yr	50 Yr	100 Yr
Major Basin ID: MV																		
OL91	1.016	2.03	14.8	14.8	Urban	0.063	0.21	0.15	9.70	0.04	43	Tc (Hrs)	1.500*	1.500*	1.500*	1.426*	1.353*	1.288*
												Vel (f/s)	1.98	1.98	1.98	2.09	2.20	2.31
												R (Hrs)	1.013	1.013	1.013	0.958	0.904	0.856
OLLO	0.160	1.12	11.3	11.3	Urban	0.028	0.10	0.15	8.80	0.05	83	Tc (Hrs)	0.784	0.784	0.770	0.716	0.682	0.652
												Vel (f/s)	2.10	2.10	2.13	2.29	2.41	2.52
												R (Hrs)	0.879	0.879	0.861	0.794	0.753	0.716
OW67	0.119	0.53	17.7	17.7	Urban	0.028	0.15	0.15	8.00	0.07	80	Tc (Hrs)	0.473	0.473	0.464	0.430	0.410	0.392
												Vel (f/s)	1.64	1.64	1.68	1.81	1.90	1.98
												R (Hrs)	0.326	0.326	0.319	0.294	0.278	0.265
OW75	0.498	1.50	15.1	15.1	Urban	0.038	0.17	0.15	8.80	0.05	60	Tc (Hrs)	0.996*	0.996*	0.975*	0.902	0.858	0.818
												Vel (f/s)	2.21	2.21	2.26	2.44	2.56	2.69
												R (Hrs)	0.758	0.758	0.741	0.679	0.642	0.610
OW83	0.496	1.50	14.6	14.6	Urban	0.081	0.25	0.15	8.40	0.07	33	Tc (Hrs)	1.500*	1.500*	1.500*	1.398*	1.320*	1.253*
												Vel (f/s)	1.47	1.47	1.47	1.57	1.67	1.76
												R (Hrs)	1.197	1.197	1.197	1.107	1.038	0.980
PE51	0.419	1.01	19.4	19.4	Urban	0.079	0.22	0.15	8.80	0.05	37	Tc (Hrs)	1.136*	1.136*	1.111*	1.019*	0.966*	0.920*
												Vel (f/s)	1.30	1.30	1.33	1.45	1.53	1.61
												R (Hrs)	0.706	0.706	0.688	0.625	0.590	0.558
PE59	0.989	1.93	19.6	19.6	Urban	0.074	0.25	0.15	8.80	0.05	31	Tc (Hrs)	1.500*	1.500*	1.500*	1.405*	1.330*	1.264*
												Vel (f/s)	1.89	1.89	1.89	2.01	2.13	2.24
												R (Hrs)	0.988	0.988	0.988	0.919	0.864	0.817
PE67	0.962	1.96	16.9	16.9	Urban	0.069	0.23	0.15	7.60	0.09	37	Tc (Hrs)	1.500*	1.500*	1.500*	1.444*	1.364*	1.295*
												Vel (f/s)	1.92	1.92	1.92	1.99	2.11	2.22
												R (Hrs)	1.016	1.016	1.016	0.975	0.914	0.863
PE75	1.007	2.01	15.0	15.0	Urban	0.074	0.24	0.15	8.00	0.07	33	Tc (Hrs)	1.500*	1.500*	1.500*	1.500*	1.484*	1.409*
												Vel (f/s)	1.97	1.97	1.97	1.97	1.99	2.09
												R (Hrs)	1.010	1.010	1.010	1.010	0.998	0.943

* Non default value or value out of range

Area ID	Sub Basin Parameters: Area (sq mi)	Length (mi)	Slope (ft/mi)	Adj Slope	Time-Area	Kb	Rainfall Losses: IA (in)	DTHETA	PSIF (in)	XKSAT (in/hr)	RTIMP (%)		Return Period Parameters: 2 Yr	5 Yr	10 Yr	25 Yr	50 Yr	100 Yr
Major Basin ID: MV																		
PE83	1.000	2.00	13.0	13.0	Urban	0.074	0.24	0.13	10.10	0.03	35	Tc (Hrs)	1.500*	1.500*	1.500*	1.500*	1.500*	1.444*
												Vel (f/s)	1.96	1.96	1.96	1.96	1.96	2.03
												R (Hrs)	1.010	1.010	1.010	1.010	1.010	0.969
PE91	0.509	1.00	19.2	19.2	Urban	0.068	0.20	0.15	9.70	0.04	50	Tc (Hrs)	1.030*	1.030*	1.008*	0.930*	0.884	0.842
												Vel (f/s)	1.42	1.42	1.46	1.58	1.66	1.74
												R (Hrs)	0.562	0.562	0.548	0.502	0.474	0.450
PELO	0.271	1.07	18.6	18.6	Urban	0.075	0.19	0.21	6.40	0.13	52	Tc (Hrs)	1.178*	1.178*	1.151*	1.053*	0.995*	0.944*
												Vel (f/s)	1.33	1.33	1.36	1.49	1.58	1.66
												R (Hrs)	0.986	0.986	0.961	0.870	0.818	0.771
RI07	0.759	1.52	11.5	11.5	Urban	0.068	0.17	0.15	8.80	0.05	58	Tc (Hrs)	1.500*	1.500*	1.471*	1.361*	1.293*	1.233*
												Vel (f/s)	1.49	1.49	1.52	1.64	1.72	1.81
												R (Hrs)	0.949	0.949	0.929	0.852	0.805	0.764
RIAF	0.659	2.07	4.8	4.8	Urban	0.059	0.22	0.18	6.60	0.13	41	Tc (Hrs)	1.500*	1.500*	1.500*	1.500*	1.500*	1.500*
												Vel (f/s)	2.02	2.02	2.02	2.02	2.02	2.02
												R (Hrs)	1.317	1.317	1.317	1.317	1.317	1.317
TB67	0.265	0.72	24.5	24.5	Urban	0.071	0.21	0.15	9.70	0.05	25	Tc (Hrs)	0.857	0.857	0.836	0.764	0.723	0.687
												Vel (f/s)	1.23	1.23	1.26	1.38	1.46	1.54
												R (Hrs)	0.511	0.511	0.497	0.450	0.423	0.400
TB75	1.026	1.55	19.0	19.0	Urban	0.074	0.23	0.15	7.00	0.11	33	Tc (Hrs)	1.473*	1.473*	1.435*	1.303*	1.227*	1.163*
												Vel (f/s)	1.54	1.54	1.58	1.74	1.85	1.95
												R (Hrs)	0.796	0.796	0.773	0.695	0.650	0.612
TB83	0.994	2.01	16.7	16.7	Urban	0.074	0.25	0.21	6.40	0.14	31	Tc (Hrs)	1.500*	1.500*	1.500*	1.500*	1.494*	1.408*
												Vel (f/s)	1.97	1.97	1.97	1.97	1.97	2.09
												R (Hrs)	1.018	1.018	1.018	1.018	1.013	0.949
TBLO	0.099	0.88	14.7	14.7	Urban	0.051	0.14	0.15	8.80	0.05	72	Tc (Hrs)	0.883	0.883	0.866	0.804	0.766	0.731
												Vel (f/s)	1.46	1.46	1.49	1.61	1.68	1.77
												R (Hrs)	1.088	1.088	1.064	0.980	0.928	0.881

* Non default value or value out of range

Area ID	Sub Basin Parameters: Area (sq mi)	Length (mi)	Slope (ft/mi)	Adj Slope	Time-Area	Kb	Rainfall Losses: IA (in)	DTHETA	PSIF (in)	XKSAT (in/hr)	RTIMP (%)		Return Period Parameters: 2 Yr	5 Yr	10 Yr	25 Yr	50 Yr	100 Yr
Major Basin ID: MV																		
TM07	0.265	0.97	6.2	6.2	Urban	0.092	0.29	0.15	9.70	0.05	15	Tc (Hrs)	1.500*	1.500*	1.500*	1.500*	1.489*	1.411*
												Vel (f/s)	0.95	0.95	0.95	0.95	0.96	1.01
												R (Hrs)	1.207	1.207	1.207	1.207	1.197	1.128
TM35	0.393	0.97	22.1	22.1	Urban	0.034	0.14	0.15	7.60	0.08	80	Tc (Hrs)	0.662	0.662	0.649	0.603	0.574	0.548
												Vel (f/s)	2.15	2.15	2.19	2.36	2.48	2.60
												R (Hrs)	0.389	0.389	0.381	0.350	0.332	0.315
TM43	0.636	1.58	10.9	10.9	Urban	0.080	0.23	0.15	8.80	0.05	37	Tc (Hrs)	1.500*	1.500*	1.500*	1.500*	1.469*	1.398*
												Vel (f/s)	1.54	1.54	1.54	1.54	1.58	1.66
												R (Hrs)	1.083	1.083	1.083	1.083	1.058	1.001
TM51	0.545	1.55	10.2	10.2	Urban	0.080	0.24	0.19	6.60	0.13	33	Tc (Hrs)	1.500*	1.500*	1.500*	1.500*	1.500*	1.449*
												Vel (f/s)	1.52	1.52	1.52	1.52	1.52	1.57
												R (Hrs)	1.165	1.165	1.165	1.165	1.165	1.121
TM59	0.599	1.53	13.0	13.0	Urban	0.066	0.24	0.19	6.60	0.14	31	Tc (Hrs)	1.500*	1.500*	1.500*	1.378*	1.293*	1.220*
												Vel (f/s)	1.50	1.50	1.50	1.63	1.74	1.84
												R (Hrs)	1.092	1.092	1.092	0.994	0.926	0.868
TM67	0.813	1.71	13.4	13.4	Urban	0.074	0.24	0.15	8.00	0.07	36	Tc (Hrs)	1.500*	1.500*	1.500*	1.482*	1.402*	1.332*
												Vel (f/s)	1.67	1.67	1.67	1.69	1.79	1.88
												R (Hrs)	1.003	1.003	1.003	0.990	0.930	0.879
TM75	0.997	2.00	13.7	13.7	Urban	0.061	0.22	0.15	9.70	0.04	41	Tc (Hrs)	1.500*	1.500*	1.500*	1.427*	1.354*	1.289*
												Vel (f/s)	1.96	1.96	1.96	2.06	2.17	2.28
												R (Hrs)	1.012	1.012	1.012	0.957	0.903	0.855
TM83	0.992	1.99	13.7	13.7	Urban	0.072	0.24	0.15	7.30	0.10	34	Tc (Hrs)	1.500*	1.500*	1.500*	1.500*	1.500*	1.432*
												Vel (f/s)	1.95	1.95	1.95	1.95	1.95	2.04
												R (Hrs)	1.011	1.011	1.011	1.011	1.011	0.960
TM91	1.003	2.00	13.6	13.6	Urban	0.073	0.24	0.15	7.30	0.09	36	Tc (Hrs)	1.500*	1.500*	1.500*	1.500*	1.500*	1.443*
												Vel (f/s)	1.96	1.96	1.96	1.96	1.96	2.03
												R (Hrs)	1.009	1.009	1.009	1.009	1.009	0.966

* Non default value or value out of range

Area ID	Sub Basin Parameters: Area (sq mi)	Length (mi)	Slope (ft/mi)	Adj Slope	Time-Area	Kb	Rainfall Losses: IA (in)	DTHETA	PSIF (in)	XKSAT (in/hr)	RTIMP (%)		Return Period Parameters: 2 Yr	5 Yr	10 Yr	25 Yr	50 Yr	100 Yr
Major Basin ID: MV																		
TM99	0.505	1.50	6.7	6.7	Urban	0.024	0.10	0.15	8.80	0.05	80	Tc (Hrs)	0.989*	0.989*	0.971*	0.902	0.860	0.821
												Vel (f/s)	2.22	2.22	2.27	2.44	2.56	2.68
												R (Hrs)	0.747	0.747	0.731	0.674	0.639	0.607
TMAF	0.762	2.06	10.5	10.5	Urban	0.068	0.22	0.16	6.80	0.11	38	Tc (Hrs)	1.500*	1.500*	1.500*	1.500*	1.500*	1.500*
												Vel (f/s)	2.01	2.01	2.01	2.01	2.01	2.01
												R (Hrs)	1.208	1.208	1.208	1.208	1.208	1.208
TMLO	0.496	1.50	10.1	10.1	Urban	0.028	0.11	0.15	8.80	0.05	75	Tc (Hrs)	0.947*	0.947*	0.929*	0.863	0.822	0.785
												Vel (f/s)	2.32	2.32	2.37	2.55	2.68	2.80
												R (Hrs)	0.719	0.719	0.704	0.648	0.614	0.583
TMRI	0.240	0.49	14.0	14.0	Urban	0.026	0.10	0.15	9.70	0.05	40	Tc (Hrs)	0.484	0.484	0.474	0.437	0.415	0.395
												Vel (f/s)	1.48	1.48	1.52	1.64	1.73	1.82
												R (Hrs)	0.211	0.211	0.206	0.188	0.178	0.168

* Non default value or value out of range

Existing Land Use by Subbasin

Sub Basin	Land Use Code	Area (sq mi)	Area (%)	Initial Loss (IA)	Percent Impervious (RTIMP)	Vegetable Cover (%)	DTHETA	Kb
Major Basin ID: MV								
BH27	150	0.000		0.25	30	15.0	NORMAL	0.095
	180	0.000		0.25	45	5.0	NORMAL	0.095
	190	0.156	60.3	0.25	45	5.0	NORMAL	0.095
	200	0.056	21.5	0.10	80	5.0	NORMAL	0.026
	520	0.027	10.5	0.29	40	40.0	NORMAL	0.026
	550	0.006	2.5	0.10	80	10.0	NORMAL	0.026
	610	0.013	5.1	0.10	80	5.0	NORMAL	0.026
		0.258	**99.9**					
BH35	150	0.756	75.2	0.25	30	15.0	NORMAL	0.080
	180	0.039	3.8	0.25	45	5.0	NORMAL	0.080
	190	0.000		0.25	45	5.0	NORMAL	0.080
	200	0.118	11.8	0.10	80	5.0	NORMAL	0.022
	520	0.053	5.2	0.29	40	40.0	NORMAL	0.022
	550	0.000		0.10	80	10.0	NORMAL	0.022
	900	0.040	3.9	0.30	0	5.0	DRY	0.041
		1.005	**99.9**					
BH43	150	0.788	79.3	0.25	30	15.0	NORMAL	0.080
	190	0.023	2.3	0.25	45	5.0	NORMAL	0.080
	200	0.054	5.4	0.10	80	5.0	NORMAL	0.022
	520	0.058	5.8	0.29	40	40.0	NORMAL	0.022
	710	0.071	7.2	0.10	5	80.0	NORMAL	0.022
		0.994	**100.0**					
BH51	150	0.375	37.6	0.25	30	15.0	NORMAL	0.080
	180	0.081	8.1	0.25	45	5.0	NORMAL	0.080
	190	0.294	29.5	0.25	45	5.0	NORMAL	0.080
	200	0.152	15.2	0.10	80	5.0	NORMAL	0.022
	320	0.001	0.1	0.15	80	0.0	NORMAL	0.022
	400	0.001	0.1	0.10	80	5.0	NORMAL	0.080
	520	0.051	5.1	0.29	40	40.0	NORMAL	0.022
	710	0.041	4.2	0.10	5	80.0	NORMAL	0.022
		0.996	**99.9**					
BH59	150	0.037	7.4	0.25	30	15.0	NORMAL	0.088
	180	0.022	4.4	0.25	45	5.0	NORMAL	0.088
	190	0.015	3.0	0.25	45	5.0	NORMAL	0.088
	200	0.023	4.7	0.10	80	5.0	NORMAL	0.024
	320	0.336	68.1	0.15	80	0.0	NORMAL	0.024
	550	0.011	2.2	0.10	80	10.0	NORMAL	0.024
	710	0.016	3.2	0.10	5	80.0	NORMAL	0.024
	900	0.034	6.8	0.30	0	5.0	DRY	0.046
		0.493	**99.8**					
BH67	150	0.527	54.3	0.25	30	15.0	NORMAL	0.080
	170	0.067	6.9	0.25	45	10.0	NORMAL	0.080
	180	0.151	15.5	0.25	45	5.0	NORMAL	0.080
	190	0.052	5.3	0.25	45	5.0	NORMAL	0.080
	200	0.092	9.5	0.10	80	5.0	NORMAL	0.023
	320	0.000		0.15	80	0.0	NORMAL	0.023
	520	0.020	2.1	0.29	40	40.0	NORMAL	0.023
	550	0.010	1.1	0.10	80	10.0	NORMAL	0.023
	710	0.012	1.3	0.10	5	80.0	NORMAL	0.023
	730	0.028	2.9	0.10	0	5.0	DRY	0.080
	750	0.000		0.50	0	85.0	NORMAL	0.042
	900	0.011	1.1	0.30	0	5.0	DRY	0.042
		0.970	**100.0**					
BH75	140	0.000		0.25	30	15.0	NORMAL	0.080
	150	0.621	61.9	0.25	30	15.0	NORMAL	0.080
	170	0.004	0.4	0.25	45	10.0	NORMAL	0.080

Sub Basin	Land Use Code	Area (sq mi)	Area (%)	Initial Loss (IA)	Percent Impervious (RTIMP)	Vegetable Cover (%)	DTHETA	Kb
Major Basin ID: MV								
BH75	180	0.008	0.8	0.25	45	5.0	NORMAL	0.080
	190	0.153	15.2	0.25	45	5.0	NORMAL	0.080
	200	0.019	1.9	0.10	80	5.0	NORMAL	0.022
	320	0.025	2.5	0.15	80	0.0	NORMAL	0.022
	520	0.049	4.9	0.29	40	40.0	NORMAL	0.022
	550	0.001	0.1	0.10	80	10.0	NORMAL	0.022
	710	0.011	1.1	0.10	5	80.0	NORMAL	0.022
	750	0.104	10.3	0.50	0	85.0	NORMAL	0.041
	900	0.008	0.8	0.30	0	5.0	DRY	0.041
		1.003	**99.9**					
BH83	120	0.000		0.30	5	50.0	NORMAL	0.080
	130	0.004	0.4	0.30	15	30.0	NORMAL	0.080
	140	0.272	27.3	0.25	30	15.0	NORMAL	0.080
	150	0.282	28.2	0.25	30	15.0	NORMAL	0.080
	170	0.016	1.6	0.25	45	10.0	NORMAL	0.080
	200	0.019	1.9	0.10	80	5.0	NORMAL	0.022
	400	0.000		0.10	80	5.0	NORMAL	0.080
	520	0.086	8.6	0.29	40	40.0	NORMAL	0.022
	550	0.021	2.1	0.10	80	10.0	NORMAL	0.022
	710	0.015	1.5	0.10	5	80.0	NORMAL	0.022
	750	0.067	6.7	0.50	0	85.0	NORMAL	0.041
	900	0.132	13.2	0.30	0	5.0	DRY	0.041
	950	0.085	8.5	0.30	0	5.0	DRY	0.041
		0.998	**100.0**					
BH91	120	0.065	6.3	0.30	5	50.0	NORMAL	0.080
	130	0.000		0.30	15	30.0	NORMAL	0.080
	140	0.544	52.7	0.25	30	15.0	NORMAL	0.080
	150	0.047	4.6	0.25	30	15.0	NORMAL	0.080
	200	0.016	1.5	0.10	80	5.0	NORMAL	0.022
	400	0.007	0.7	0.10	80	5.0	NORMAL	0.080
	520	0.023	2.3	0.29	40	40.0	NORMAL	0.022
	710	0.134	13.0	0.10	5	80.0	NORMAL	0.022
	750	0.133	12.9	0.50	0	85.0	NORMAL	0.041
	900	0.032	3.1	0.30	0	5.0	DRY	0.041
	950	0.032	3.1	0.30	0	5.0	DRY	0.041
		1.032	**100.2**					
BH99	200	0.000	0.1	0.10	80	5.0	NORMAL	0.027
	610	0.045	24.7	0.10	80	5.0	NORMAL	0.027
	730	0.004	2.0	0.10	0	5.0	DRY	0.098
	750	0.135	73.3	0.50	0	85.0	NORMAL	0.052
		0.184	**100.1**					
BHLO	140	0.001	0.1	0.25	30	15.0	NORMAL	0.082
	250	0.704	89.3	0.10	85	0.0	NORMAL	0.023
	550	0.002	0.2	0.10	80	10.0	NORMAL	0.023
	610	0.043	5.4	0.10	80	5.0	NORMAL	0.023
	710	0.038	4.8	0.10	5	80.0	NORMAL	0.023
	750	0.000	0.1	0.50	0	85.0	NORMAL	0.043
	810	0.000		0.10	80	5.0	NORMAL	0.082
	900	0.000		0.30	0	5.0	DRY	0.043
		0.788	**99.9**					
BHNR	730	0.029	11.3	0.10	0	5.0	DRY	0.095
	750	0.229	88.7	0.50	0	85.0	NORMAL	0.050
		0.258	**100.0**					
BHRI	200	0.000		0.10	80	5.0	NORMAL	0.024
	730	0.020	4.0	0.10	0	5.0	DRY	0.087
	750	0.492	96.0	0.50	0	85.0	NORMAL	0.045

Sub Basin	Land Use Code	Area (sq mi)	Area (%)	Initial Loss (IA)	Percent Impervious (RTIMP)	Vegetable Cover (%)	DTHETA	Kb
Major Basin ID: MV								
BHRI	900	0.000		0.30	0	5.0	DRY	0.045
		0.513	**100.0**					
CB07	120	0.274	86.2	0.30	5	50.0	NORMAL	0.092
	130	0.002	0.5	0.30	15	30.0	NORMAL	0.092
	710	0.000		0.10	5	80.0	NORMAL	0.026
	730	0.014	4.4	0.10	0	5.0	DRY	0.092
	750	0.028	8.9	0.50	0	85.0	NORMAL	0.048
	900	0.000		0.30	0	5.0	DRY	0.048
		0.318	**100.0**					
CB27	150	0.087	33.2	0.25	30	15.0	NORMAL	0.094
	180	0.050	19.3	0.25	45	5.0	NORMAL	0.094
	200	0.068	25.9	0.10	80	5.0	NORMAL	0.026
	320	0.026	9.9	0.15	80	0.0	NORMAL	0.026
	520	0.018	7.0	0.29	40	40.0	NORMAL	0.026
	610	0.012	4.7	0.10	80	5.0	NORMAL	0.026
		0.262	**100.0**					
CB35	150	0.498	49.8	0.25	30	15.0	NORMAL	0.080
	180	0.167	16.7	0.25	45	5.0	NORMAL	0.080
	190	0.031	3.1	0.25	45	5.0	NORMAL	0.080
	200	0.078	7.8	0.10	80	5.0	NORMAL	0.022
	520	0.192	19.2	0.29	40	40.0	NORMAL	0.022
	550	0.008	0.8	0.10	80	10.0	NORMAL	0.022
	710	0.026	2.6	0.10	5	80.0	NORMAL	0.022
		1.000	**100.0**					
CB43	150	0.803	80.4	0.25	30	15.0	NORMAL	0.080
	180	0.106	10.6	0.25	45	5.0	NORMAL	0.080
	190	0.000		0.25	45	5.0	NORMAL	0.080
	200	0.056	5.6	0.10	80	5.0	NORMAL	0.022
	320	0.000		0.15	80	0.0	NORMAL	0.022
	520	0.033	3.3	0.29	40	40.0	NORMAL	0.022
		0.999	**99.9**					
CB51	200	0.000		0.10	80	5.0	NORMAL	0.024
	320	0.483	100.0	0.15	80	0.0	NORMAL	0.024
	610	0.000		0.10	80	5.0	NORMAL	0.088
		0.483	**100.0**					
CB59	150	0.000		0.25	30	15.0	NORMAL	0.080
	180	0.111	11.0	0.25	45	5.0	NORMAL	0.080
	190	0.091	9.0	0.25	45	5.0	NORMAL	0.080
	200	0.106	10.5	0.10	80	5.0	NORMAL	0.022
	320	0.462	45.7	0.15	80	0.0	NORMAL	0.022
	710	0.016	1.5	0.10	5	80.0	NORMAL	0.022
	810	0.079	7.8	0.10	80	5.0	NORMAL	0.080
	900	0.147	14.5	0.30	0	5.0	DRY	0.041
		1.010	**100.0**					
CB67	150	0.640	65.9	0.25	30	15.0	NORMAL	0.080
	170	0.000		0.25	45	10.0	NORMAL	0.080
	180	0.085	8.8	0.25	45	5.0	NORMAL	0.080
	190	0.116	11.9	0.25	45	5.0	NORMAL	0.080
	200	0.051	5.3	0.10	80	5.0	NORMAL	0.023
	520	0.040	4.1	0.29	40	40.0	NORMAL	0.023
	710	0.022	2.3	0.10	5	80.0	NORMAL	0.023
	900	0.016	1.6	0.30	0	5.0	DRY	0.042
		0.970	**99.9**					
CB75	150	0.835	83.7	0.25	30	15.0	NORMAL	0.080

* Non default value

Sub Basin	Land Use Code	Area (sq mi)	Area (%)	Initial Loss (IA)	Percent Impervious (RTIMP)	Vegetable Cover (%)	DTHETA	Kb
Major Basin ID: MV								
CB75	170	0.031	3.1	0.25	45	10.0	NORMAL	0.080
	180	0.011	1.1	0.25	45	5.0	NORMAL	0.080
	190	0.016	1.6	0.25	45	5.0	NORMAL	0.080
	200	0.039	3.9	0.10	80	5.0	NORMAL	0.022
	520	0.032	3.2	0.29	40	40.0	NORMAL	0.022
	550	0.000		0.10	80	10.0	NORMAL	0.022
	710	0.011	1.1	0.10	5	80.0	NORMAL	0.022
	750	0.023	2.3	0.50	0	85.0	NORMAL	0.041
		0.998	**100.0**					
CB83	120	0.052	9.4	0.30	5	50.0	NORMAL	0.086
	130	0.301	54.4	0.30	15	30.0	NORMAL	0.086
	150	0.173	31.3	0.25	30	15.0	NORMAL	0.086
	200	0.009	1.7	0.10	80	5.0	NORMAL	0.024
	710	0.018	3.3	0.10	5	80.0	NORMAL	0.024
	750	0.000		0.50	0	85.0	NORMAL	0.045
		0.554	**100.1**					
CB91	120	0.000		0.30	5	50.0	NORMAL	0.080
	130	0.064	6.7	0.30	15	30.0	NORMAL	0.080
	140	0.116	12.1	0.25	30	15.0	NORMAL	0.080
	200	0.000		0.10	80	5.0	NORMAL	0.023
	520	0.022	2.3	0.29	40	40.0	NORMAL	0.023
	710	0.028	3.0	0.10	5	80.0	NORMAL	0.023
	750	0.604	62.8	0.50	0	85.0	NORMAL	0.042
	900	0.126	13.1	0.30	0	5.0	DRY	0.042
		0.961	**100.0**					
CB99	200	0.009	4.6	0.10	80	5.0	NORMAL	0.027
	400	0.028	14.0	0.10	80	5.0	NORMAL	0.097
	550	0.006	3.0	0.10	80	10.0	NORMAL	0.027
	610	0.043	21.4	0.10	80	5.0	NORMAL	0.027
	730	0.002	1.1	0.10	0	5.0	DRY	0.097
	750	0.000		0.50	0	85.0	NORMAL	0.051
	810	0.001	0.2	0.10	80	5.0	NORMAL	0.097
	900	0.112	55.6	0.30	0	5.0	DRY	0.051
		0.201	**99.9**					
CBLO	120	0.128	15.7	0.30	5	50.0	NORMAL	0.082
	130	0.007	0.9	0.30	15	30.0	NORMAL	0.082
	200	0.052	6.4	0.10	80	5.0	NORMAL	0.023
	400	0.004	0.5	0.10	80	5.0	NORMAL	0.082
	520	0.088	10.8	0.29	40	40.0	NORMAL	0.023
	610	0.037	4.5	0.10	80	5.0	NORMAL	0.023
	710	0.014	1.7	0.10	5	80.0	NORMAL	0.023
	750	0.479	58.6	0.50	0	85.0	NORMAL	0.043
	900	0.009	1.1	0.30	0	5.0	DRY	0.043
		0.818	**100.2**					
CBNR	120	0.002	0.4	0.30	5	50.0	NORMAL	0.088
	130	0.000		0.30	15	30.0	NORMAL	0.088
	150	0.002	0.4	0.25	30	15.0	NORMAL	0.088
	170	0.000	0.1	0.25	45	10.0	NORMAL	0.088
	200	0.000		0.10	80	5.0	NORMAL	0.025
	710	0.294	63.2	0.10	5	80.0	NORMAL	0.025
	730	0.104	22.2	0.10	0	5.0	DRY	0.088
	750	0.000		0.50	0	85.0	NORMAL	0.046
	900	0.064	13.6	0.30	0	5.0	DRY	0.046
		0.466	**99.9**					
CBRI	120	0.007	1.0	0.30	5	50.0	NORMAL	0.084
	130	0.000		0.30	15	30.0	NORMAL	0.084

* Non default value

Sub Basin	Land Use Code	Area (sq mi)	Area (%)	Initial Loss (IA)	Percent Impervious (RTIMP)	Vegetable Cover (%)	DTHETA	Kb
Major Basin ID: MV								
CBRI	150	0.343	49.0	0.25	30	15.0	NORMAL	0.084
	190	0.063	9.0	0.25	45	5.0	NORMAL	0.084
	200	0.017	2.4	0.10	80	5.0	NORMAL	0.023
	400	0.000		0.10	80	5.0	NORMAL	0.084
	520	0.000		0.29	40	40.0	NORMAL	0.023
	550	0.000		0.10	80	10.0	NORMAL	0.023
	730	0.014	1.9	0.10	0	5.0	DRY	0.084
	750	0.255	36.6	0.50	0	85.0	NORMAL	0.044
	810	0.000		0.10	80	5.0	NORMAL	0.084
	900	0.000		0.30	0	5.0	DRY	0.044
		0.699	99.9					
CT59	150	0.247	83.5	0.25	30	15.0	NORMAL	0.093
	200	0.008	2.7	0.10	80	5.0	NORMAL	0.026
	520	0.019	6.3	0.29	40	40.0	NORMAL	0.026
	530	0.000		0.10	80	5.0	NORMAL	0.093
	710	0.022	7.5	0.10	5	80.0	NORMAL	0.026
		0.296	100.0					
CT67	120	0.000		0.30	5	50.0	NORMAL	0.081
	130	0.392	43.0	0.30	15	30.0	NORMAL	0.081
	140	0.092	10.1	0.25	30	15.0	NORMAL	0.081
	150	0.117	12.8	0.25	30	15.0	NORMAL	0.081
	200	0.025	2.8	0.10	80	5.0	NORMAL	0.023
	400	0.018	2.0	0.10	80	5.0	NORMAL	0.081
	520	0.081	8.9	0.29	40	40.0	NORMAL	0.023
	530	0.061	6.7	0.10	80	5.0	NORMAL	0.081
	550	0.003	0.3	0.10	80	10.0	NORMAL	0.023
	710	0.021	2.3	0.10	5	80.0	NORMAL	0.023
	750	0.100	11.0	0.50	0	85.0	NORMAL	0.042
	900	0.000		0.30	0	5.0	DRY	0.042
		0.910	99.9					
CT75	130	0.235	23.4	0.30	15	30.0	NORMAL	0.080
	140	0.668	66.6	0.25	30	15.0	NORMAL	0.080
	150	0.000		0.25	30	15.0	NORMAL	0.080
	200	0.001	0.1	0.10	80	5.0	NORMAL	0.022
	400	0.001	0.1	0.10	80	5.0	NORMAL	0.080
	520	0.022	2.2	0.29	40	40.0	NORMAL	0.022
	750	0.076	7.5	0.50	0	85.0	NORMAL	0.041
	900	0.000		0.30	0	5.0	DRY	0.041
		1.004	99.9					
CT83	140	0.979	97.0	0.25	30	15.0	NORMAL	0.080
	150	0.000		0.25	30	15.0	NORMAL	0.080
	200	0.000		0.10	80	5.0	NORMAL	0.022
	240	0.000		0.10	85	5.0	NORMAL	0.022
	520	0.030	2.9	0.29	40	40.0	NORMAL	0.022
		1.008	99.9					
CTLO	140	0.558	64.5	0.25	30	15.0	NORMAL	0.081
	240	0.056	6.5	0.10	85	5.0	NORMAL	0.023
	320	0.059	6.8	0.15	80	0.0	NORMAL	0.023
	520	0.022	2.5	0.29	40	40.0	NORMAL	0.023
	810	0.170	19.7	0.10	80	5.0	NORMAL	0.081
		0.865	100.0					
GC35	320	0.077	100.0	0.15	80	0.0	NORMAL	0.029
		0.077	100.0					
GC43	150	0.000		0.25	30	15.0	NORMAL	0.091
	190	0.000		0.25	45	5.0	NORMAL	0.091

Sub Basin	Land Use Code	Area (sq mi)	Area (%)	Initial Loss (IA)	Percent Impervious (RTIMP)	Vegetable Cover (%)	DTHETA	Kb
Major Basin ID: MV								
GC43	200	0.001	0.1	0.10	80	5.0	NORMAL	0.025
	320	0.369	99.8	0.15	80	0.0	NORMAL	0.025
		0.370	99.9					
GC51	150	0.358	80.0	0.25	30	15.0	NORMAL	0.089
	190	0.033	7.5	0.25	45	5.0	NORMAL	0.089
	200	0.036	7.9	0.10	80	5.0	NORMAL	0.025
	320	0.000		0.15	80	0.0	NORMAL	0.025
	520	0.016	3.5	0.29	40	40.0	NORMAL	0.025
	550	0.005	1.1	0.10	80	10.0	NORMAL	0.025
		0.448	100.0					
GC59	150	0.158	38.6	0.25	30	15.0	NORMAL	0.090
	190	0.041	10.1	0.25	45	5.0	NORMAL	0.090
	200	0.056	13.6	0.10	80	5.0	NORMAL	0.025
	520	0.154	37.6	0.29	40	40.0	NORMAL	0.025
	550	0.000		0.10	80	10.0	NORMAL	0.025
	720	0.000		0.10	5	90.0	NORMAL	0.025
		0.410	99.9					
GC67	150	0.553	59.0	0.25	30	15.0	NORMAL	0.081
	180	0.066	7.1	0.25	45	5.0	NORMAL	0.081
	200	0.029	3.1	0.10	80	5.0	NORMAL	0.023
	520	0.071	7.5	0.29	40	40.0	NORMAL	0.023
	710	0.000		0.10	5	80.0	NORMAL	0.023
	720	0.218	23.3	0.10	5	90.0	NORMAL	0.023
		0.937	100.0					
GC75	150	0.352	85.6	0.25	30	15.0	NORMAL	0.090
	180	0.032	7.8	0.25	45	5.0	NORMAL	0.090
	200	0.018	4.3	0.10	80	5.0	NORMAL	0.025
	710	0.009	2.3	0.10	5	80.0	NORMAL	0.025
		0.411	100.0					
GC83	140	0.274	64.3	0.25	30	15.0	NORMAL	0.089
	150	0.027	6.4	0.25	30	15.0	NORMAL	0.089
	200	0.000	0.1	0.10	80	5.0	NORMAL	0.025
	520	0.022	5.2	0.29	40	40.0	NORMAL	0.025
	550	0.012	2.7	0.10	80	10.0	NORMAL	0.025
	710	0.052	12.1	0.10	5	80.0	NORMAL	0.025
	750	0.032	7.4	0.50	0	85.0	NORMAL	0.047
	900	0.008	1.8	0.30	0	5.0	DRY	0.047
		0.426	100.0					
GCGR	190	0.035	9.2	0.25	45	5.0	NORMAL	0.090
	200	0.054	14.4	0.10	80	5.0	NORMAL	0.025
	320	0.268	71.1	0.15	80	0.0	NORMAL	0.025
	610	0.005	1.3	0.10	80	5.0	NORMAL	0.025
	810	0.015	4.0	0.10	80	5.0	NORMAL	0.090
		0.376	100.0					
GL27	150	0.081	31.4	0.25	30	15.0	NORMAL	0.095
	180	0.145	56.2	0.25	45	5.0	NORMAL	0.095
	200	0.018	7.1	0.10	80	5.0	NORMAL	0.026
	520	0.000		0.29	40	40.0	NORMAL	0.026
	550	0.000		0.10	80	10.0	NORMAL	0.026
	610	0.013	5.2	0.10	80	5.0	NORMAL	0.026
		0.258	99.9					
GL35	150	0.821	81.7	0.25	30	15.0	NORMAL	0.080
	180	0.069	6.9	0.25	45	5.0	NORMAL	0.080
	190	0.000		0.25	45	5.0	NORMAL	0.080

Sub Basin	Land Use Code	Area (sq mi)	Area (%)	Initial Loss (IA)	Percent Impervious (RTIMP)	Vegetable Cover (%)	DTHETA	Kb
Major Basin ID: MV								
GL35	200	0.053	5.3	0.10	80	5.0	NORMAL	0.022
	520	0.000		0.29	40	40.0	NORMAL	0.022
	550	0.029	2.9	0.10	80	10.0	NORMAL	0.022
	710	0.031	3.1	0.10	5	80.0	NORMAL	0.022
		1.004	99.9					
GL43	150	0.849	85.1	0.25	30	15.0	NORMAL	0.080
	190	0.000		0.25	45	5.0	NORMAL	0.080
	200	0.109	11.0	0.10	80	5.0	NORMAL	0.022
	520	0.039	3.9	0.29	40	40.0	NORMAL	0.022
		0.998	100.0					
GL51	130	0.016	1.6	0.30	15	30.0	NORMAL	0.080
	140	0.125	12.5	0.25	30	15.0	NORMAL	0.080
	150	0.419	41.8	0.25	30	15.0	NORMAL	0.080
	170	0.011	1.1	0.25	45	10.0	NORMAL	0.080
	180	0.046	4.6	0.25	45	5.0	NORMAL	0.080
	190	0.173	17.2	0.25	45	5.0	NORMAL	0.080
	200	0.145	14.5	0.10	80	5.0	NORMAL	0.022
	220	0.000		0.10	75	10.0	NORMAL	0.022
	400	0.013	1.3	0.10	80	5.0	NORMAL	0.080
	520	0.030	3.0	0.29	40	40.0	NORMAL	0.022
	550	0.008	0.8	0.10	80	10.0	NORMAL	0.022
	710	0.008	0.8	0.10	5	80.0	NORMAL	0.022
	900	0.009	0.9	0.30	0	5.0	DRY	0.041
		1.002	100.1					
GL59	140	0.137	13.5	0.25	30	15.0	NORMAL	0.080
	150	0.288	28.4	0.25	30	15.0	NORMAL	0.080
	170	0.058	5.8	0.25	45	10.0	NORMAL	0.080
	180	0.071	7.0	0.25	45	5.0	NORMAL	0.080
	190	0.089	8.7	0.25	45	5.0	NORMAL	0.080
	200	0.129	12.7	0.10	80	5.0	NORMAL	0.022
	220	0.135	13.3	0.10	75	10.0	NORMAL	0.022
	400	0.010	1.0	0.10	80	5.0	NORMAL	0.080
	520	0.036	3.6	0.29	40	40.0	NORMAL	0.022
	550	0.017	1.7	0.10	80	10.0	NORMAL	0.022
	710	0.031	3.1	0.10	5	80.0	NORMAL	0.022
	900	0.012	1.2	0.30	0	5.0	DRY	0.041
		1.015	100.0					
GL67	170	0.000		0.25	45	10.0	NORMAL	0.091
	180	0.025	7.0	0.25	45	5.0	NORMAL	0.091
	190	0.081	22.6	0.25	45	5.0	NORMAL	0.091
	200	0.028	7.7	0.10	80	5.0	NORMAL	0.025
	220	0.020	5.5	0.10	75	10.0	NORMAL	0.025
	320	0.094	26.1	0.15	80	0.0	NORMAL	0.025
	520	0.056	15.5	0.29	40	40.0	NORMAL	0.025
	550	0.055	15.4	0.10	80	10.0	NORMAL	0.025
	730	0.000		0.10	0	5.0	DRY	0.091
	750	0.000		0.50	0	85.0	NORMAL	0.048
	900	0.000		0.30	0	5.0	DRY	0.048
		0.359	99.8					
GL75	140	0.000		0.25	30	15.0	NORMAL	0.087
	150	0.090	18.0	0.25	30	15.0	NORMAL	0.087
	170	0.287	57.5	0.25	45	10.0	NORMAL	0.087
	180	0.012	2.3	0.25	45	5.0	NORMAL	0.087
	190	0.023	4.5	0.25	45	5.0	NORMAL	0.087
	200	0.044	8.8	0.10	80	5.0	NORMAL	0.024
	320	0.000		0.15	80	0.0	NORMAL	0.024
	550	0.004	0.7	0.10	80	10.0	NORMAL	0.024

Sub Basin	Land Use Code	Area (sq mi)	Area (%)	Initial Loss (IA)	Percent Impervious (RTIMP)	Vegetable Cover (%)	DTHETA	Kb
Major Basin ID: MV								
GL75	750	0.040	8.1	0.50	0	85.0	NORMAL	0.046
	900	0.000		0.30	0	5.0	DRY	0.046
		0.500	99.9					
GL83	130	0.035	7.0	0.30	15	30.0	NORMAL	0.087
	140	0.177	35.8	0.25	30	15.0	NORMAL	0.087
	150	0.132	26.6	0.25	30	15.0	NORMAL	0.087
	170	0.059	11.8	0.25	45	10.0	NORMAL	0.087
	180	0.005	1.0	0.25	45	5.0	NORMAL	0.087
	190	0.000		0.25	45	5.0	NORMAL	0.087
	200	0.008	1.5	0.10	80	5.0	NORMAL	0.024
	520	0.020	4.1	0.29	40	40.0	NORMAL	0.024
	710	0.011	2.2	0.10	5	80.0	NORMAL	0.024
	750	0.031	6.2	0.50	0	85.0	NORMAL	0.046
	900	0.018	3.7	0.30	0	5.0	DRY	0.046
		0.495	99.9					
GL91	130	0.179	18.2	0.30	15	30.0	NORMAL	0.080
	140	0.453	46.3	0.25	30	15.0	NORMAL	0.080
	150	0.000		0.25	30	15.0	NORMAL	0.080
	200	0.002	0.2	0.10	80	5.0	NORMAL	0.023
	240	0.000		0.10	85	5.0	NORMAL	0.023
	400	0.034	3.5	0.10	80	5.0	NORMAL	0.080
	520	0.072	7.4	0.29	40	40.0	NORMAL	0.023
	610	0.031	3.1	0.10	80	5.0	NORMAL	0.023
	710	0.008	0.8	0.10	5	80.0	NORMAL	0.023
	750	0.114	11.6	0.50	0	85.0	NORMAL	0.042
	900	0.028	2.8	0.30	0	5.0	DRY	0.042
	950	0.058	5.9	0.30	0	5.0	DRY	0.042
		0.979	99.8					
GLLO	240	0.004	0.5	0.10	85	5.0	NORMAL	0.023
	250	0.000		0.10	85	0.0	NORMAL	0.023
	400	0.000		0.10	80	5.0	NORMAL	0.082
	520	0.000		0.29	40	40.0	NORMAL	0.023
	610	0.063	7.5	0.10	80	5.0	NORMAL	0.023
	750	0.534	62.9	0.50	0	85.0	NORMAL	0.042
	810	0.157	18.5	0.10	80	5.0	NORMAL	0.082
	900	0.089	10.5	0.30	0	5.0	DRY	0.042
	950	0.000		0.30	0	5.0	DRY	0.042
		0.848	99.9					
GLNR	140	0.001	0.2	0.25	30	15.0	NORMAL	0.088
	200	0.022	4.6	0.10	80	5.0	NORMAL	0.024
	240	0.000		0.10	85	5.0	NORMAL	0.024
	610	0.048	10.0	0.10	80	5.0	NORMAL	0.024
	730	0.009	1.9	0.10	0	5.0	DRY	0.088
	750	0.208	43.1	0.50	0	85.0	NORMAL	0.046
	810	0.080	16.6	0.10	80	5.0	NORMAL	0.088
	900	0.114	23.6	0.30	0	5.0	DRY	0.046
		0.483	100.0					
GR27	150	0.090	22.0	0.25	30	15.0	NORMAL	0.090
	190	0.036	8.9	0.25	45	5.0	NORMAL	0.090
	320	0.269	66.1	0.15	80	0.0	NORMAL	0.025
	610	0.012	3.0	0.10	80	5.0	NORMAL	0.025
	810	0.000	0.1	0.10	80	5.0	NORMAL	0.090
		0.407	100.1					
GR35	150	0.206	38.8	0.25	30	15.0	NORMAL	0.087
	180	0.014	2.6	0.25	45	5.0	NORMAL	0.087
	190	0.025	4.8	0.25	45	5.0	NORMAL	0.087

Sub Basin	Land Use Code	Area (sq mi)	Area (%)	Initial Loss (IA)	Percent Impervious (RTIMP)	Vegetable Cover (%)	DTHETA	Kb
Major Basin ID: MV								
GR35	200	0.164	30.9	0.10	80	5.0	NORMAL	0.024
	320	0.030	5.7	0.15	80	0.0	NORMAL	0.024
	520	0.063	11.8	0.29	40	40.0	NORMAL	0.024
	900	0.029	5.5	0.30	0	5.0	DRY	0.045
		0.531	100.1					
GR43	150	0.155	30.2	0.25	30	15.0	NORMAL	0.087
	180	0.056	10.9	0.25	45	5.0	NORMAL	0.087
	190	0.078	15.2	0.25	45	5.0	NORMAL	0.087
	200	0.036	7.1	0.10	80	5.0	NORMAL	0.024
	320	0.094	18.3	0.15	80	0.0	NORMAL	0.024
	520	0.033	6.4	0.29	40	40.0	NORMAL	0.024
	710	0.016	3.1	0.10	5	80.0	NORMAL	0.024
	900	0.045	8.7	0.30	0	5.0	DRY	0.045
		0.514	99.9					
GR59	150	0.117	22.6	0.25	30	15.0	NORMAL	0.087
	170	0.013	2.6	0.25	45	10.0	NORMAL	0.087
	190	0.044	8.5	0.25	45	5.0	NORMAL	0.087
	200	0.207	40.0	0.10	80	5.0	NORMAL	0.024
	220	0.067	13.0	0.10	75	10.0	NORMAL	0.024
	320	0.019	3.6	0.15	80	0.0	NORMAL	0.024
	520	0.018	3.5	0.29	40	40.0	NORMAL	0.024
	550	0.024	4.7	0.10	80	10.0	NORMAL	0.024
	710	0.004	0.8	0.10	5	80.0	NORMAL	0.024
	900	0.003	0.7	0.30	0	5.0	DRY	0.045
		0.518	100.0					
GR67	140	0.014	2.9	0.25	30	15.0	NORMAL	0.087
	150	0.145	29.1	0.25	30	15.0	NORMAL	0.087
	170	0.000		0.25	45	10.0	NORMAL	0.087
	190	0.014	2.9	0.25	45	5.0	NORMAL	0.087
	200	0.041	8.1	0.10	80	5.0	NORMAL	0.024
	220	0.032	6.5	0.10	75	10.0	NORMAL	0.024
	320	0.107	21.5	0.15	80	0.0	NORMAL	0.024
	400	0.015	3.0	0.10	80	5.0	NORMAL	0.087
	550	0.002	0.5	0.10	80	10.0	NORMAL	0.024
	710	0.086	17.4	0.10	5	80.0	NORMAL	0.024
	900	0.041	8.2	0.30	0	5.0	DRY	0.046
		0.497	100.1					
GR75	140	0.001	0.1	0.25	30	15.0	NORMAL	0.087
	150	0.005	1.1	0.25	30	15.0	NORMAL	0.087
	170	0.056	11.2	0.25	45	10.0	NORMAL	0.087
	180	0.055	11.0	0.25	45	5.0	NORMAL	0.087
	190	0.079	15.9	0.25	45	5.0	NORMAL	0.087
	200	0.009	1.8	0.10	80	5.0	NORMAL	0.024
	320	0.080	16.2	0.15	80	0.0	NORMAL	0.024
	550	0.003	0.6	0.10	80	10.0	NORMAL	0.024
	610	0.058	11.6	0.10	80	5.0	NORMAL	0.024
	710	0.000		0.10	5	80.0	NORMAL	0.024
	750	0.066	13.2	0.50	0	85.0	NORMAL	0.046
	810	0.002	0.3	0.10	80	5.0	NORMAL	0.087
	900	0.084	17.0	0.30	0	5.0	DRY	0.046
		0.497	100.0					
GR83	140	0.121	25.8	0.25	30	15.0	NORMAL	0.088
	150	0.060	12.7	0.25	30	15.0	NORMAL	0.088
	200	0.080	17.0	0.10	80	5.0	NORMAL	0.025
	220	0.046	9.7	0.10	75	10.0	NORMAL	0.025
	520	0.029	6.2	0.29	40	40.0	NORMAL	0.025
	550	0.000		0.10	80	10.0	NORMAL	0.025

Sub Basin	Land Use Code	Area (sq mi)	Area (%)	Initial Loss (IA)	Percent Impervious (RTIMP)	Vegetable Cover (%)	DTHETA	Kb
Major Basin ID: MV								
GR83	810	0.104	22.2	0.10	80	5.0	NORMAL	0.088
	900	0.030	6.3	0.30	0	5.0	DRY	0.046
		0.468	99.9					
GR91	140	0.207	40.2	0.25	30	15.0	NORMAL	0.087
	150	0.101	19.7	0.25	30	15.0	NORMAL	0.087
	220	0.020	3.9	0.10	75	10.0	NORMAL	0.024
	320	0.033	6.4	0.15	80	0.0	NORMAL	0.024
	520	0.076	14.8	0.29	40	40.0	NORMAL	0.024
	750	0.042	8.2	0.50	0	85.0	NORMAL	0.045
	810	0.035	6.9	0.10	80	5.0	NORMAL	0.087
		0.514	100.1					
GW83	140	0.201	69.0	0.25	30	15.0	NORMAL	0.093
	520	0.024	8.1	0.29	40	40.0	NORMAL	0.026
	740	0.001	0.3	0.00	0	0.0	WET	0.026
	750	0.049	16.8	0.50	0	85.0	NORMAL	0.049
	900	0.017	5.7	0.30	0	5.0	DRY	0.049
		0.291	99.9					
IN07	180	0.000	0.1	0.25	45	5.0	NORMAL	0.095
	230	0.029	11.4	0.10	85	5.0	NORMAL	0.026
	240	0.050	19.4	0.10	85	5.0	NORMAL	0.026
	610	0.074	29.0	0.10	80	5.0	NORMAL	0.026
	730	0.000		0.10	0	5.0	DRY	0.095
	750	0.102	39.7	0.50	0	85.0	NORMAL	0.050
	810	0.001	0.4	0.10	80	5.0	NORMAL	0.095
	900	0.000		0.30	0	5.0	DRY	0.050
		0.256	100.0					
IN27	200	0.000	0.1	0.10	80	5.0	NORMAL	0.029
	320	0.087	82.7	0.15	80	0.0	NORMAL	0.029
	610	0.018	17.2	0.10	80	5.0	NORMAL	0.029
		0.106	100.0					
IN35	150	0.046	18.8	0.25	30	15.0	NORMAL	0.095
	180	0.029	12.1	0.25	45	5.0	NORMAL	0.095
	200	0.056	23.2	0.10	80	5.0	NORMAL	0.026
	320	0.062	25.4	0.15	80	0.0	NORMAL	0.026
	520	0.016	6.7	0.29	40	40.0	NORMAL	0.026
	610	0.033	13.8	0.10	80	5.0	NORMAL	0.026
		0.243	100.0					
IN43	150	0.134	52.4	0.25	30	15.0	NORMAL	0.095
	190	0.033	13.1	0.25	45	5.0	NORMAL	0.095
	200	0.045	17.5	0.10	80	5.0	NORMAL	0.026
	610	0.044	17.1	0.10	80	5.0	NORMAL	0.026
		0.256	100.1					
IN51	200	0.072	30.9	0.10	80	5.0	NORMAL	0.026
	320	0.092	39.6	0.15	80	0.0	NORMAL	0.026
	610	0.053	22.8	0.10	80	5.0	NORMAL	0.026
	900	0.016	6.7	0.30	0	5.0	DRY	0.050
		0.232	100.0					
IN59	190	0.103	51.2	0.25	45	5.0	NORMAL	0.097
	200	0.018	9.1	0.10	80	5.0	NORMAL	0.027
	610	0.060	29.6	0.10	80	5.0	NORMAL	0.027
	900	0.021	10.2	0.30	0	5.0	DRY	0.051
		0.202	100.1					
IN67	190	0.125	63.7	0.25	45	5.0	NORMAL	0.097

Sub Basin	Land Use Code	Area (sq mi)	Area (%)	Initial Loss (IA)	Percent Impervious (RTIMP)	Vegetable Cover (%)	DTHETA	Kb
Major Basin ID: MV								
IN67	200	0.005	2.5	0.10	80	5.0	NORMAL	0.027
	610	0.056	28.5	0.10	80	5.0	NORMAL	0.027
	900	0.011	5.3	0.30	0	5.0	DRY	0.051
		0.197	**100.0**					
IN75	150	0.000	0.1	0.25	30	15.0	NORMAL	0.097
	190	0.093	46.4	0.25	45	5.0	NORMAL	0.097
	200	0.023	11.4	0.10	80	5.0	NORMAL	0.027
	610	0.063	31.6	0.10	80	5.0	NORMAL	0.027
	900	0.021	10.6	0.30	0	5.0	DRY	0.051
		0.199	**100.1**					
IN83	190	0.089	45.6	0.25	45	5.0	NORMAL	0.098
	200	0.017	8.8	0.10	80	5.0	NORMAL	0.027
	230	0.000	0.1	0.10	85	5.0	NORMAL	0.027
	320	0.036	18.2	0.15	80	0.0	NORMAL	0.027
	610	0.054	27.4	0.10	80	5.0	NORMAL	0.027
		0.196	**100.1**					
IN91	190	0.000	0.1	0.25	45	5.0	NORMAL	0.098
	200	0.000	0.1	0.10	80	5.0	NORMAL	0.027
	230	0.048	26.0	0.10	85	5.0	NORMAL	0.027
	320	0.027	14.3	0.15	80	0.0	NORMAL	0.027
	610	0.071	38.1	0.10	80	5.0	NORMAL	0.027
	730	0.040	21.5	0.10	0	5.0	DRY	0.098
		0.185	**100.1**					
INAF	140	0.001	0.1	0.25	30	15.0	NORMAL	0.088
	180	0.094	19.9	0.25	45	5.0	NORMAL	0.088
	610	0.067	14.1	0.10	80	5.0	NORMAL	0.024
	730	0.174	36.9	0.10	0	5.0	DRY	0.088
	750	0.100	21.2	0.50	0	85.0	NORMAL	0.046
	810	0.000	0.1	0.10	80	5.0	NORMAL	0.088
	900	0.036	7.7	0.30	0	5.0	DRY	0.046
		0.472	**100.0**					
INAV	140	0.001	0.4	0.25	30	15.0	NORMAL	0.096
	230	0.000		0.10	85	5.0	NORMAL	0.026
	240	0.049	20.9	0.10	85	5.0	NORMAL	0.026
	610	0.056	23.8	0.10	80	5.0	NORMAL	0.026
	750	0.129	54.7	0.50	0	85.0	NORMAL	0.050
	810	0.000	0.1	0.10	80	5.0	NORMAL	0.096
		0.235	**99.9**					
INLO	180	0.000	0.1	0.25	45	5.0	NORMAL	0.101
	200	0.000	0.1	0.10	80	5.0	NORMAL	0.028
	230	0.009	5.9	0.10	85	5.0	NORMAL	0.028
	610	0.055	37.5	0.10	80	5.0	NORMAL	0.028
	730	0.083	56.5	0.10	0	5.0	DRY	0.101
		0.147	**100.1**					
IS07	150	0.579	56.7	0.25	30	15.0	NORMAL	0.080
	180	0.029	2.9	0.25	45	5.0	NORMAL	0.080
	190	0.033	3.3	0.25	45	5.0	NORMAL	0.080
	200	0.063	6.2	0.10	80	5.0	NORMAL	0.022
	520	0.038	3.7	0.29	40	40.0	NORMAL	0.022
	720	0.200	19.6	0.10	5	90.0	NORMAL	0.022
	750	0.005	0.5	0.50	0	85.0	NORMAL	0.041
	900	0.073	7.1	0.30	0	5.0	DRY	0.041
		1.021	**100.0**					
IS27	150	0.000	0.1	0.25	30	15.0	NORMAL	0.095

Sub Basin	Land Use Code	Area (sq mi)	Area (%)	Initial Loss (IA)	Percent Impervious (RTIMP)	Vegetable Cover (%)	DTHETA	Kb
Major Basin ID: MV								
IS27	190	0.152	63.6	0.25	45	5.0	NORMAL	0.095
	200	0.076	31.9	0.10	80	5.0	NORMAL	0.026
	320	0.000		0.15	80	0.0	NORMAL	0.026
	610	0.011	4.4	0.10	80	5.0	NORMAL	0.026
		0.239	**100.0**					
IS35	150	0.764	77.2	0.25	30	15.0	NORMAL	0.080
	180	0.000		0.25	45	5.0	NORMAL	0.080
	190	0.044	4.4	0.25	45	5.0	NORMAL	0.080
	200	0.031	3.2	0.10	80	5.0	NORMAL	0.022
	320	0.000		0.15	80	0.0	NORMAL	0.022
	520	0.080	8.1	0.29	40	40.0	NORMAL	0.022
	710	0.071	7.2	0.10	5	80.0	NORMAL	0.022
	900	0.000		0.30	0	5.0	DRY	0.041
		0.991	**100.1**					
IS43	320	0.467	100.0	0.15	80	0.0	NORMAL	0.025
		0.467	**100.0**					
IS51	150	0.397	39.9	0.25	30	15.0	NORMAL	0.080
	190	0.000		0.25	45	5.0	NORMAL	0.080
	200	0.021	2.2	0.10	80	5.0	NORMAL	0.022
	320	0.383	38.5	0.15	80	0.0	NORMAL	0.022
	520	0.021	2.2	0.29	40	40.0	NORMAL	0.022
	550	0.000		0.10	80	10.0	NORMAL	0.022
	810	0.026	2.6	0.10	80	5.0	NORMAL	0.080
	900	0.145	14.6	0.30	0	5.0	DRY	0.041
		0.994	**100.0**					
IS59	150	0.640	63.1	0.25	30	15.0	NORMAL	0.080
	190	0.132	13.0	0.25	45	5.0	NORMAL	0.080
	200	0.143	14.1	0.10	80	5.0	NORMAL	0.022
	320	0.000		0.15	80	0.0	NORMAL	0.022
	520	0.035	3.5	0.29	40	40.0	NORMAL	0.022
	550	0.062	6.2	0.10	80	10.0	NORMAL	0.022
	720	0.001		0.10	5	90.0	NORMAL	0.022
	810	0.001	0.1	0.10	80	5.0	NORMAL	0.080
		1.014	**100.0**					
IS75	150	0.393	63.9	0.25	30	15.0	NORMAL	0.085
	180	0.093	15.2	0.25	45	5.0	NORMAL	0.085
	190	0.000		0.25	45	5.0	NORMAL	0.085
	200	0.098	15.9	0.10	80	5.0	NORMAL	0.024
	520	0.031	5.0	0.29	40	40.0	NORMAL	0.024
	900	0.000		0.30	0	5.0	DRY	0.044
		0.615	**100.0**					
IS83	120	0.001	0.1	0.30	5	50.0	NORMAL	0.080
	130	0.003	0.3	0.30	15	30.0	NORMAL	0.080
	150	0.859	86.7	0.25	30	15.0	NORMAL	0.080
	170	0.000		0.25	45	10.0	NORMAL	0.080
	190	0.014	1.4	0.25	45	5.0	NORMAL	0.080
	200	0.079	8.0	0.10	80	5.0	NORMAL	0.022
	520	0.022	2.2	0.29	40	40.0	NORMAL	0.022
	900	0.014	1.4	0.30	0	5.0	DRY	0.041
		0.991	**100.1**					
IS91	140	0.002	0.2	0.25	30	15.0	NORMAL	0.080
	150	0.631	63.1	0.25	30	15.0	NORMAL	0.080
	170	0.197	19.8	0.25	45	10.0	NORMAL	0.080
	180	0.046	4.6	0.25	45	5.0	NORMAL	0.080
	200	0.045	4.5	0.10	80	5.0	NORMAL	0.022

Sub Basin	Land Use Code	Area (sq mi)	Area (%)	Initial Loss (IA)	Percent Impervious (RTIMP)	Vegetable Cover (%)	DTHETA	Kb
Major Basin ID: MV								
IS91	520	0.074	7.4	0.29	40	40.0	NORMAL	0.022
	750	0.003	0.3	0.50	0	85.0	NORMAL	0.041
	900	0.002	0.2	0.30	0	5.0	DRY	0.041
		0.999	100.1					
IS99	150	0.003	0.8	0.25	30	15.0	NORMAL	0.092
	200	0.001	0.4	0.10	80	5.0	NORMAL	0.026
	610	0.047	14.6	0.10	80	5.0	NORMAL	0.026
	750	0.272	84.2	0.50	0	85.0	NORMAL	0.048
		0.323	100.0					
ISAF	150	0.559	56.5	0.25	30	15.0	NORMAL	0.080
	170	0.093	9.4	0.25	45	10.0	NORMAL	0.080
	200	0.047	4.7	0.10	80	5.0	NORMAL	0.022
	320	0.235	23.7	0.15	80	0.0	NORMAL	0.022
	520	0.034	3.5	0.29	40	40.0	NORMAL	0.022
	710	0.000		0.10	5	80.0	NORMAL	0.022
	750	0.021	2.1	0.50	0	85.0	NORMAL	0.041
	900	0.000		0.30	0	5.0	DRY	0.041
		0.989	99.9					
ISGC	150	0.143	90.1	0.25	30	15.0	NORMAL	0.100
	520	0.009	5.7	0.29	40	40.0	NORMAL	0.027
	550	0.006	3.6	0.10	80	10.0	NORMAL	0.027
	720	0.001	0.6	0.10	5	90.0	NORMAL	0.027
		0.159	100.0					
ISLO	120	0.047	6.9	0.30	5	50.0	NORMAL	0.084
	150	0.249	36.3	0.25	30	15.0	NORMAL	0.084
	180	0.001	0.2	0.25	45	5.0	NORMAL	0.084
	200	0.036	5.2	0.10	80	5.0	NORMAL	0.023
	220	0.004	0.5	0.10	75	10.0	NORMAL	0.023
	400	0.000	0.1	0.10	80	5.0	NORMAL	0.084
	520	0.002	0.2	0.29	40	40.0	NORMAL	0.023
	610	0.044	6.4	0.10	80	5.0	NORMAL	0.023
	750	0.286	41.8	0.50	0	85.0	NORMAL	0.044
	900	0.017	2.4	0.30	0	5.0	DRY	0.044
		0.685	100.0					
MD07	130	0.144	18.4	0.30	15	30.0	NORMAL	0.083
	140	0.368	47.0	0.25	30	15.0	NORMAL	0.083
	180	0.083	10.6	0.25	45	5.0	NORMAL	0.083
	200	0.010	1.3	0.10	80	5.0	NORMAL	0.023
	230	0.002	0.2	0.10	85	5.0	NORMAL	0.023
	240	0.124	15.9	0.10	85	5.0	NORMAL	0.023
	740	0.009	1.1	0.00	0	0.0	WET	0.023
	750	0.009	1.2	0.50	0	85.0	NORMAL	0.043
	900	0.033	4.2	0.30	0	5.0	DRY	0.043
		0.784	99.9					
MD27	200	0.000		0.10	80	5.0	NORMAL	0.026
	320	0.222	92.2	0.15	80	0.0	NORMAL	0.026
	610	0.019	7.8	0.10	80	5.0	NORMAL	0.026
		0.241	100.0					
MD35	150	0.386	38.6	0.25	30	15.0	NORMAL	0.080
	200	0.027	2.7	0.10	80	5.0	NORMAL	0.022
	320	0.405	40.6	0.15	80	0.0	NORMAL	0.022
	520	0.030	3.0	0.29	40	40.0	NORMAL	0.022
	550	0.006	0.6	0.10	80	10.0	NORMAL	0.022
	810	0.126	12.6	0.10	80	5.0	NORMAL	0.080
	900	0.019	1.9	0.30	0	5.0	DRY	0.041

Sub Basin	Land Use Code	Area (sq mi)	Area (%)	Initial Loss (IA)	Percent Impervious (RTIMP)	Vegetable Cover (%)	DTHETA	Kb
Major Basin ID: MV								
		0.999	100.0					
MD43	150	0.708	70.8	0.25	30	15.0	NORMAL	0.080
	190	0.072	7.2	0.25	45	5.0	NORMAL	0.080
	200	0.073	7.3	0.10	80	5.0	NORMAL	0.022
	520	0.020	2.0	0.29	40	40.0	NORMAL	0.022
	710	0.000		0.10	5	80.0	NORMAL	0.022
	810	0.127	12.7	0.10	80	5.0	NORMAL	0.080
		1.000	100.0					
MD51	150	0.679	67.8	0.25	30	15.0	NORMAL	0.080
	180	0.069	6.9	0.25	45	5.0	NORMAL	0.080
	190	0.083	8.2	0.25	45	5.0	NORMAL	0.080
	200	0.073	7.3	0.10	80	5.0	NORMAL	0.022
	320	0.000		0.15	80	0.0	NORMAL	0.022
	520	0.035	3.5	0.29	40	40.0	NORMAL	0.022
	710	0.063	6.2	0.10	5	80.0	NORMAL	0.022
	900	0.000		0.30	0	5.0	DRY	0.041
		1.001	99.9					
MD59	150	0.880	87.6	0.25	30	15.0	NORMAL	0.080
	190	0.025	2.5	0.25	45	5.0	NORMAL	0.080
	200	0.045	4.4	0.10	80	5.0	NORMAL	0.022
	520	0.055	5.4	0.29	40	40.0	NORMAL	0.022
	900	0.000		0.30	0	5.0	DRY	0.041
		1.005	99.9					
MD67	150	0.646	66.0	0.25	30	15.0	NORMAL	0.080
	190	0.049	5.0	0.25	45	5.0	NORMAL	0.080
	200	0.052	5.3	0.10	80	5.0	NORMAL	0.023
	520	0.057	5.8	0.29	40	40.0	NORMAL	0.023
	710	0.166	17.0	0.10	5	80.0	NORMAL	0.023
	900	0.010	1.0	0.30	0	5.0	DRY	0.042
		0.978	100.1					
MD75	150	0.775	77.4	0.25	30	15.0	NORMAL	0.080
	190	0.000		0.25	45	5.0	NORMAL	0.080
	200	0.171	17.1	0.10	80	5.0	NORMAL	0.022
	520	0.026	2.6	0.29	40	40.0	NORMAL	0.022
	750	0.019	1.9	0.50	0	85.0	NORMAL	0.041
	900	0.010	1.0	0.30	0	5.0	DRY	0.041
		1.002	100.0					
MD83	150	0.000		0.25	30	15.0	NORMAL	0.080
	170	0.000		0.25	45	10.0	NORMAL	0.080
	190	0.080	8.0	0.25	45	5.0	NORMAL	0.080
	200	0.432	43.5	0.10	80	5.0	NORMAL	0.022
	320	0.000		0.15	80	0.0	NORMAL	0.022
	550	0.105	10.6	0.10	80	10.0	NORMAL	0.022
	750	0.214	21.6	0.50	0	85.0	NORMAL	0.041
	900	0.068	6.9	0.30	0	5.0	DRY	0.041
	950	0.093	9.4	0.30	0	5.0	DRY	0.041
		0.992	100.0					
MD91	150	0.573	56.9	0.25	30	15.0	NORMAL	0.080
	170	0.028	2.8	0.25	45	10.0	NORMAL	0.080
	180	0.109	10.8	0.25	45	5.0	NORMAL	0.080
	190	0.062	6.2	0.25	45	5.0	NORMAL	0.080
	200	0.161	16.0	0.10	80	5.0	NORMAL	0.022
	230	0.000		0.10	85	5.0	NORMAL	0.022
	320	0.000		0.15	80	0.0	NORMAL	0.022
	550	0.005	0.5	0.10	80	10.0	NORMAL	0.022

Sub Basin	Land Use Code	Area (sq mi)	Area (%)	Initial Loss (IA)	Percent Impervious (RTIMP)	Vegetable Cover (%)	DTHETA	Kb
Major Basin ID: MV								
MD91	710	0.022	2.2	0.10	5	80.0	NORMAL	0.022
	730	0.000		0.10	0	5.0	DRY	0.080
	750	0.031	3.1	0.50	0	85.0	NORMAL	0.041
	900	0.015	1.5	0.30	0	5.0	DRY	0.041
		1.007	100.0					
MD99	200	0.005	1.5	0.10	80	5.0	NORMAL	0.026
	230	0.000		0.10	85	5.0	NORMAL	0.026
	610	0.048	15.2	0.10	80	5.0	NORMAL	0.026
	730	0.000		0.10	0	5.0	DRY	0.092
	750	0.266	83.3	0.50	0	85.0	NORMAL	0.048
		0.319	100.0					
MDAF	140	0.440	52.8	0.25	30	15.0	NORMAL	0.082
	150	0.000		0.25	30	15.0	NORMAL	0.082
	180	0.001	0.1	0.25	45	5.0	NORMAL	0.082
	220	0.009	1.1	0.10	75	10.0	NORMAL	0.023
	320	0.001	0.1	0.15	80	0.0	NORMAL	0.023
	520	0.032	3.8	0.29	40	40.0	NORMAL	0.023
	550	0.008	0.9	0.10	80	10.0	NORMAL	0.023
	555	0.010	1.2	0.10	5	0.0	DRY	0.023
	730	0.143	17.1	0.10	0	5.0	DRY	0.082
	750	0.073	8.7	0.50	0	85.0	NORMAL	0.042
	900	0.118	14.1	0.30	0	5.0	DRY	0.042
		0.835	99.9					
MDAV	130	0.000		0.30	15	30.0	NORMAL	0.080
	140	0.701	73.5	0.25	30	15.0	NORMAL	0.080
	150	0.043	4.5	0.25	30	15.0	NORMAL	0.080
	230	0.014	1.4	0.10	85	5.0	NORMAL	0.023
	740	0.119	12.5	0.00	0	0.0	WET	0.023
	750	0.056	5.8	0.50	0	85.0	NORMAL	0.042
	900	0.022	2.3	0.30	0	5.0	DRY	0.042
		0.954	100.0					
MDLO	150	0.356	53.0	0.25	30	15.0	NORMAL	0.084
	180	0.027	4.0	0.25	45	5.0	NORMAL	0.084
	190	0.036	5.3	0.25	45	5.0	NORMAL	0.084
	200	0.153	22.7	0.10	80	5.0	NORMAL	0.024
	230	0.000		0.10	85	5.0	NORMAL	0.024
	610	0.047	7.0	0.10	80	5.0	NORMAL	0.024
	730	0.000		0.10	0	5.0	DRY	0.084
	900	0.054	8.0	0.30	0	5.0	DRY	0.044
		0.672	100.0					
NO27	150	0.001	0.6	0.25	30	15.0	NORMAL	0.102
	190	0.029	22.6	0.25	45	5.0	NORMAL	0.102
	200	0.053	42.3	0.10	80	5.0	NORMAL	0.028
	520	0.028	21.8	0.29	40	40.0	NORMAL	0.028
	610	0.016	12.6	0.10	80	5.0	NORMAL	0.028
		0.126	99.9					
NO35	150	0.619	62.5	0.25	30	15.0	NORMAL	0.080
	180	0.111	11.2	0.25	45	5.0	NORMAL	0.080
	190	0.113	11.4	0.25	45	5.0	NORMAL	0.080
	200	0.070	7.1	0.10	80	5.0	NORMAL	0.022
	520	0.071	7.2	0.29	40	40.0	NORMAL	0.022
	550	0.001	0.1	0.10	80	10.0	NORMAL	0.022
	610	0.005	0.5	0.10	80	5.0	NORMAL	0.022
	710	0.000		0.10	5	80.0	NORMAL	0.022
		0.991	100.0					

* Non default value

(stLuDataCG.rpt)

Sub Basin	Land Use Code	Area (sq mi)	Area (%)	Initial Loss (IA)	Percent Impervious (RTIMP)	Vegetable Cover (%)	DTHETA	Kb
Major Basin ID: MV								
NO43	150	0.893	89.7	0.25	30	15.0	NORMAL	0.080
	180	0.014	1.4	0.25	45	5.0	NORMAL	0.080
	190	0.000		0.25	45	5.0	NORMAL	0.080
	200	0.049	5.0	0.10	80	5.0	NORMAL	0.022
	520	0.024	2.4	0.29	40	40.0	NORMAL	0.022
	710	0.015	1.5	0.10	5	80.0	NORMAL	0.022
		0.995	100.0					
NO51	130	0.000		0.30	15	30.0	NORMAL	0.080
	140	0.634	63.8	0.25	30	15.0	NORMAL	0.080
	150	0.006	0.6	0.25	30	15.0	NORMAL	0.080
	170	0.023	2.3	0.25	45	10.0	NORMAL	0.080
	180	0.059	5.9	0.25	45	5.0	NORMAL	0.080
	190	0.053	5.4	0.25	45	5.0	NORMAL	0.080
	200	0.063	6.3	0.10	80	5.0	NORMAL	0.022
	400	0.015	1.5	0.10	80	5.0	NORMAL	0.080
	520	0.110	11.0	0.29	40	40.0	NORMAL	0.022
	710	0.021	2.1	0.10	5	80.0	NORMAL	0.022
	900	0.010	1.0	0.30	0	5.0	DRY	0.041
		0.993	99.9					
NO59	130	0.031	3.1	0.30	15	30.0	NORMAL	0.080
	140	0.369	37.2	0.25	30	15.0	NORMAL	0.080
	150	0.318	32.1	0.25	30	15.0	NORMAL	0.080
	170	0.000		0.25	45	10.0	NORMAL	0.080
	180	0.038	3.8	0.25	45	5.0	NORMAL	0.080
	190	0.031	3.1	0.25	45	5.0	NORMAL	0.080
	200	0.010	1.0	0.10	80	5.0	NORMAL	0.022
	400	0.020	2.0	0.10	80	5.0	NORMAL	0.080
	520	0.031	3.1	0.29	40	40.0	NORMAL	0.022
	710	0.081	8.1	0.10	5	80.0	NORMAL	0.022
	750	0.062	6.3	0.50	0	85.0	NORMAL	0.041
	900	0.000		0.30	0	5.0	DRY	0.041
		0.992	99.8					
NO67	130	0.000		0.30	15	30.0	NORMAL	0.080
	140	0.000		0.25	30	15.0	NORMAL	0.080
	150	0.062	6.5	0.25	30	15.0	NORMAL	0.080
	170	0.203	21.2	0.25	45	10.0	NORMAL	0.080
	180	0.130	13.6	0.25	45	5.0	NORMAL	0.080
	190	0.233	24.3	0.25	45	5.0	NORMAL	0.080
	200	0.016	1.6	0.10	80	5.0	NORMAL	0.023
	320	0.054	5.6	0.15	80	0.0	NORMAL	0.023
	400	0.022	2.3	0.10	80	5.0	NORMAL	0.080
	500	0.000		0.29	45	30.0	NORMAL	0.023
	710	0.075	7.9	0.10	5	80.0	NORMAL	0.023
	750	0.150	15.7	0.50	0	85.0	NORMAL	0.042
	900	0.011	1.2	0.30	0	5.0	DRY	0.042
		0.957	99.9					
NO75	200	0.000		0.10	80	5.0	NORMAL	0.024
	320	0.041	8.0	0.15	80	0.0	NORMAL	0.024
	550	0.176	34.8	0.10	80	10.0	NORMAL	0.024
	610	0.003	0.6	0.10	80	5.0	NORMAL	0.024
	750	0.139	27.5	0.50	0	85.0	NORMAL	0.045
	810	0.147	29.0	0.10	80	5.0	NORMAL	0.087
		0.506	99.9					
NO83	140	0.001	0.1	0.25	30	15.0	NORMAL	0.080
	200	0.000		0.10	80	5.0	NORMAL	0.022
	550	0.065	6.4	0.10	80	10.0	NORMAL	0.022
	610	0.000		0.10	80	5.0	NORMAL	0.022

* Non default value

(stLuDataCG.rpt)

Sub Basin	Land Use Code	Area (sq mi)	Area (%)	Initial Loss (IA)	Percent Impervious (RTIMP)	Vegetable Cover (%)	DTHETA	Kb
Major Basin ID: MV								
NO83	750	0.566	56.3	0.50	0	85.0	NORMAL	0.041
	810	0.373	37.1	0.10	80	5.0	NORMAL	0.080
	900	0.000		0.30	0	5.0	DRY	0.041
		1.005	99.9					
NO91	140	0.709	71.4	0.25	30	15.0	NORMAL	0.080
	240	0.000		0.10	85	5.0	NORMAL	0.022
	520	0.031	3.1	0.29	40	40.0	NORMAL	0.022
	750	0.142	14.3	0.50	0	85.0	NORMAL	0.041
	900	0.111	11.2	0.30	0	5.0	DRY	0.041
		0.993	100.0					
NOLO	140	0.000	0.1	0.25	30	15.0	NORMAL	0.094
	240	0.280	99.8	0.10	85	5.0	NORMAL	0.026
	750	0.000		0.50	0	85.0	NORMAL	0.049
	900	0.000		0.30	0	5.0	DRY	0.049
		0.280	99.9					
OL35	150	0.000		0.25	30	15.0	NORMAL	0.097
	180	0.000	0.2	0.25	45	5.0	NORMAL	0.097
	190	0.000	0.1	0.25	45	5.0	NORMAL	0.097
	200	0.040	18.7	0.10	80	5.0	NORMAL	0.027
	250	0.004	1.8	0.10	85	0.0	NORMAL	0.027
	550	0.101	47.2	0.10	80	10.0	NORMAL	0.027
	610	0.006	2.9	0.10	80	5.0	NORMAL	0.027
	710	0.062	29.0	0.10	5	80.0	NORMAL	0.027
		0.215	99.9					
OL43	150	0.553	87.1	0.25	30	15.0	NORMAL	0.085
	180	0.020	3.1	0.25	45	5.0	NORMAL	0.085
	190	0.013	2.1	0.25	45	5.0	NORMAL	0.085
	200	0.027	4.2	0.10	80	5.0	NORMAL	0.024
	520	0.022	3.5	0.29	40	40.0	NORMAL	0.024
		0.635	100.0					
OL51	120	0.031	3.1	0.30	5	50.0	NORMAL	0.080
	140	0.000		0.25	30	15.0	NORMAL	0.080
	150	0.663	66.7	0.25	30	15.0	NORMAL	0.080
	170	0.080	8.0	0.25	45	10.0	NORMAL	0.080
	180	0.021	2.1	0.25	45	5.0	NORMAL	0.080
	190	0.035	3.5	0.25	45	5.0	NORMAL	0.080
	200	0.094	9.5	0.10	80	5.0	NORMAL	0.022
	520	0.021	2.1	0.29	40	40.0	NORMAL	0.022
	550	0.002	0.2	0.10	80	10.0	NORMAL	0.022
	710	0.048	4.8	0.10	5	80.0	NORMAL	0.022
		0.993	100.0					
OL59	120	0.031	3.1	0.30	5	50.0	NORMAL	0.080
	140	0.669	67.6	0.25	30	15.0	NORMAL	0.080
	150	0.093	9.4	0.25	30	15.0	NORMAL	0.080
	170	0.051	5.1	0.25	45	10.0	NORMAL	0.080
	180	0.008	0.8	0.25	45	5.0	NORMAL	0.080
	190	0.022	2.2	0.25	45	5.0	NORMAL	0.080
	200	0.063	6.4	0.10	80	5.0	NORMAL	0.022
	400	0.011	1.1	0.10	80	5.0	NORMAL	0.080
	520	0.026	2.6	0.29	40	40.0	NORMAL	0.022
	710	0.017	1.7	0.10	5	80.0	NORMAL	0.022
		0.990	100.0					
OL67	140	0.001	0.1	0.25	30	15.0	NORMAL	0.080
	150	0.425	44.3	0.25	30	15.0	NORMAL	0.080
	170	0.065	6.7	0.25	45	10.0	NORMAL	0.080

* Non default value

Sub Basin	Land Use Code	Area (sq mi)	Area (%)	Initial Loss (IA)	Percent Impervious (RTIMP)	Vegetable Cover (%)	DTHETA	Kb
Major Basin ID: MV								
OL67	190	0.008	0.8	0.25	45	5.0	NORMAL	0.080
	200	0.033	3.4	0.10	80	5.0	NORMAL	0.023
	400	0.015	1.5	0.10	80	5.0	NORMAL	0.080
	500	0.243	25.3	0.29	45	30.0	NORMAL	0.023
	520	0.011	1.2	0.29	40	40.0	NORMAL	0.023
	550	0.038	3.9	0.10	80	10.0	NORMAL	0.023
	710	0.123	12.8	0.10	5	80.0	NORMAL	0.023
		0.960	100.0					
OL75	140	0.749	74.6	0.25	30	15.0	NORMAL	0.080
	150	0.065	6.4	0.25	30	15.0	NORMAL	0.080
	170	0.002	0.2	0.25	45	10.0	NORMAL	0.080
	190	0.025	2.5	0.25	45	5.0	NORMAL	0.080
	200	0.065	6.5	0.10	80	5.0	NORMAL	0.022
	520	0.022	2.2	0.29	40	40.0	NORMAL	0.022
	710	0.069	6.9	0.10	5	80.0	NORMAL	0.022
	750	0.000		0.50	0	85.0	NORMAL	0.041
	810	0.000		0.10	80	5.0	NORMAL	0.080
	900	0.007	0.7	0.30	0	5.0	DRY	0.041
		1.004	100.0					
OL83	140	0.085	15.8	0.25	30	15.0	NORMAL	0.087
	180	0.058	10.8	0.25	45	5.0	NORMAL	0.087
	200	0.002	0.3	0.10	80	5.0	NORMAL	0.024
	220	0.041	7.6	0.10	75	10.0	NORMAL	0.024
	550	0.000		0.10	80	10.0	NORMAL	0.024
	710	0.001	0.2	0.10	5	80.0	NORMAL	0.024
	750	0.166	30.9	0.50	0	85.0	NORMAL	0.045
	810	0.085	15.8	0.10	80	5.0	NORMAL	0.087
	900	0.100	18.7	0.30	0	5.0	DRY	0.045
		0.537	100.1					
OL91	140	0.593	58.4	0.25	30	15.0	NORMAL	0.080
	150	0.106	10.4	0.25	30	15.0	NORMAL	0.080
	180	0.000		0.25	45	5.0	NORMAL	0.080
	190	0.029	2.8	0.25	45	5.0	NORMAL	0.080
	200	0.007	0.7	0.10	80	5.0	NORMAL	0.022
	220	0.141	13.9	0.10	75	10.0	NORMAL	0.022
	240	0.000		0.10	85	5.0	NORMAL	0.022
	520	0.022	2.2	0.29	40	40.0	NORMAL	0.022
	550	0.084	8.3	0.10	80	10.0	NORMAL	0.022
	710	0.003	0.3	0.10	5	80.0	NORMAL	0.022
	750	0.030	3.0	0.50	0	85.0	NORMAL	0.041
	900	0.000		0.30	0	5.0	DRY	0.041
		1.016	100.0					
OLLO	140	0.001	0.4	0.25	30	15.0	NORMAL	0.100
	190	0.000	0.1	0.25	45	5.0	NORMAL	0.100
	220	0.000	0.1	0.10	75	10.0	NORMAL	0.027
	240	0.159	99.5	0.10	85	5.0	NORMAL	0.027
		0.160	100.1					
OW67	320	0.092	77.5	0.15	80	0.0	NORMAL	0.028
	550	0.000	0.1	0.10	80	10.0	NORMAL	0.028
	750	0.027	22.4	0.50	0	85.0	NORMAL	0.054
		0.119	100.0					
OW75	140	0.000	0.1	0.25	30	15.0	NORMAL	0.087
	150	0.047	9.4	0.25	30	15.0	NORMAL	0.087
	170	0.000		0.25	45	10.0	NORMAL	0.087
	320	0.278	55.8	0.15	80	0.0	NORMAL	0.024
	550	0.003	0.6	0.10	80	10.0	NORMAL	0.024

* Non default value

Sub Basin	Land Use Code	Area (sq mi)	Area (%)	Initial Loss (IA)	Percent Impervious (RTIMP)	Vegetable Cover (%)	DTHETA	Kb
Major Basin ID: MV								
OW75	710	0.010	2.1	0.10	5	80.0	NORMAL	0.024
	750	0.077	15.4	0.50	0	85.0	NORMAL	0.046
	810	0.000		0.10	80	5.0	NORMAL	0.087
	900	0.083	16.6	0.30	0	5.0	DRY	0.046
		0.498	100.0					
OW83	130	0.299	60.2	0.30	15	30.0	NORMAL	0.087
	140	0.053	10.8	0.25	30	15.0	NORMAL	0.087
	320	0.051	10.2	0.15	80	0.0	NORMAL	0.024
	520	0.000		0.29	40	40.0	NORMAL	0.024
	550	0.000		0.10	80	10.0	NORMAL	0.024
	710	0.000		0.10	5	80.0	NORMAL	0.024
	750	0.019	3.9	0.50	0	85.0	NORMAL	0.046
	810	0.003	0.5	0.10	80	5.0	NORMAL	0.087
	900	0.071	14.4	0.30	0	5.0	DRY	0.046
		0.496	100.0					
PE51	130	0.050	11.9	0.30	15	30.0	NORMAL	0.089
	150	0.271	64.6	0.25	30	15.0	NORMAL	0.089
	170	0.000		0.25	45	10.0	NORMAL	0.089
	190	0.010	2.4	0.25	45	5.0	NORMAL	0.089
	200	0.027	6.5	0.10	80	5.0	NORMAL	0.025
	400	0.020	4.7	0.10	80	5.0	NORMAL	0.089
	550	0.030	7.3	0.10	80	10.0	NORMAL	0.025
	710	0.011	2.7	0.10	5	80.0	NORMAL	0.025
		0.419	100.1					
PE59	130	0.152	15.4	0.30	15	30.0	NORMAL	0.080
	140	0.052	5.2	0.25	30	15.0	NORMAL	0.080
	150	0.635	64.2	0.25	30	15.0	NORMAL	0.080
	170	0.035	3.5	0.25	45	10.0	NORMAL	0.080
	190	0.016	1.6	0.25	45	5.0	NORMAL	0.080
	200	0.064	6.4	0.10	80	5.0	NORMAL	0.022
	520	0.021	2.1	0.29	40	40.0	NORMAL	0.022
	710	0.016	1.6	0.10	5	80.0	NORMAL	0.022
		0.990	100.0					
PE67	130	0.063	6.5	0.30	15	30.0	NORMAL	0.080
	140	0.000		0.25	30	15.0	NORMAL	0.080
	150	0.605	62.9	0.25	30	15.0	NORMAL	0.080
	170	0.060	6.2	0.25	45	10.0	NORMAL	0.080
	180	0.011	1.2	0.25	45	5.0	NORMAL	0.080
	190	0.039	4.0	0.25	45	5.0	NORMAL	0.080
	200	0.057	5.9	0.10	80	5.0	NORMAL	0.023
	520	0.036	3.8	0.29	40	40.0	NORMAL	0.023
	530	0.001	0.1	0.10	80	5.0	NORMAL	0.080
	550	0.056	5.8	0.10	80	10.0	NORMAL	0.023
	710	0.026	2.7	0.10	5	80.0	NORMAL	0.023
	900	0.009	0.9	0.30	0	5.0	DRY	0.042
		0.962	100.0					
PE75	140	0.900	89.3	0.25	30	15.0	NORMAL	0.080
	150	0.003	0.3	0.25	30	15.0	NORMAL	0.080
	170	0.000		0.25	45	10.0	NORMAL	0.080
	180	0.000		0.25	45	5.0	NORMAL	0.080
	190	0.000		0.25	45	5.0	NORMAL	0.080
	200	0.063	6.3	0.10	80	5.0	NORMAL	0.022
	520	0.025	2.5	0.29	40	40.0	NORMAL	0.022
	710	0.015	1.5	0.10	5	80.0	NORMAL	0.022
	900	0.000		0.30	0	5.0	DRY	0.041
		1.007	99.9					

Sub Basin	Land Use Code	Area (sq mi)	Area (%)	Initial Loss (IA)	Percent Impervious (RTIMP)	Vegetable Cover (%)	DTHETA	Kb
Major Basin ID: MV								
PE83	140	0.478	47.8	0.25	30	15.0	NORMAL	0.080
	150	0.362	36.2	0.25	30	15.0	NORMAL	0.080
	190	0.037	3.7	0.25	45	5.0	NORMAL	0.080
	200	0.013	1.3	0.10	80	5.0	NORMAL	0.022
	220	0.049	4.9	0.10	75	10.0	NORMAL	0.022
	520	0.024	2.4	0.29	40	40.0	NORMAL	0.022
	530	0.006	0.6	0.10	80	5.0	NORMAL	0.080
	550	0.007	0.7	0.10	80	10.0	NORMAL	0.022
	900	0.024	2.4	0.30	0	5.0	DRY	0.041
		1.000	100.0					
PE91	140	0.119	23.4	0.25	30	15.0	NORMAL	0.087
	150	0.126	24.8	0.25	30	15.0	NORMAL	0.087
	190	0.079	15.5	0.25	45	5.0	NORMAL	0.087
	220	0.060	11.8	0.10	75	10.0	NORMAL	0.024
	240	0.058	11.3	0.10	85	5.0	NORMAL	0.024
	320	0.000		0.15	80	0.0	NORMAL	0.024
	520	0.006	1.1	0.29	40	40.0	NORMAL	0.024
	550	0.004	0.8	0.10	80	10.0	NORMAL	0.024
	810	0.028	5.5	0.10	80	5.0	NORMAL	0.087
	950	0.029	5.7	0.30	0	5.0	DRY	0.045
		0.509	99.9					
PELO	140	0.100	36.9	0.25	30	15.0	NORMAL	0.094
	150	0.054	20.0	0.25	30	15.0	NORMAL	0.094
	220	0.000		0.10	75	10.0	NORMAL	0.026
	240	0.032	11.7	0.10	85	5.0	NORMAL	0.026
	320	0.004	1.5	0.15	80	0.0	NORMAL	0.026
	730	0.044	16.3	0.10	0	5.0	DRY	0.094
	810	0.037	13.5	0.10	80	5.0	NORMAL	0.094
		0.271	99.9					
RI07	140	0.217	28.6	0.25	30	15.0	NORMAL	0.083
	150	0.000		0.25	30	15.0	NORMAL	0.083
	190	0.001	0.1	0.25	45	5.0	NORMAL	0.083
	200	0.000		0.10	80	5.0	NORMAL	0.023
	230	0.032	4.3	0.10	85	5.0	NORMAL	0.023
	710	0.000	0.1	0.10	5	80.0	NORMAL	0.023
	740	0.002	0.3	0.00	0	0.0	WET	0.023
	750	0.505	66.6	0.50	0	85.0	NORMAL	0.043
	900	0.000		0.30	0	5.0	DRY	0.043
		0.759	100.0					
RIAF	140	0.378	57.4	0.25	30	15.0	NORMAL	0.084
	150	0.004	0.5	0.25	30	15.0	NORMAL	0.084
	200	0.000		0.10	80	5.0	NORMAL	0.024
	230	0.020	3.0	0.10	85	5.0	NORMAL	0.024
	320	0.123	18.6	0.15	80	0.0	NORMAL	0.024
	520	0.102	15.4	0.29	40	40.0	NORMAL	0.024
	730	0.000		0.10	0	5.0	DRY	0.084
	740	0.033	4.9	0.00	0	0.0	WET	0.024
	750	0.001	0.1	0.50	0	85.0	NORMAL	0.044
		0.659	99.9					
TB67	120	0.033	12.5	0.30	5	50.0	NORMAL	0.094
	130	0.044	16.8	0.30	15	30.0	NORMAL	0.094
	140	0.087	32.8	0.25	30	15.0	NORMAL	0.094
	550	0.009	3.6	0.10	80	10.0	NORMAL	0.026
	710	0.060	22.6	0.10	5	80.0	NORMAL	0.026
	750	0.000		0.50	0	85.0	NORMAL	0.049
	900	0.031	11.8	0.30	0	5.0	DRY	0.049

Sub Basin	Land Use Code	Area (sq mi)	Area (%)	Initial Loss (IA)	Percent Impervious (RTIMP)	Vegetable Cover (%)	DTHETA	Kb
Major Basin ID: MV								
		0.265	**100.1**					
TB75	140	0.107	10.4	0.25	30	15.0	NORMAL	0.080
	150	0.811	79.1	0.25	30	15.0	NORMAL	0.080
	200	0.035	3.4	0.10	80	5.0	NORMAL	0.022
	550	0.035	3.4	0.10	80	10.0	NORMAL	0.022
	710	0.000		0.10	5	80.0	NORMAL	0.022
	740	0.024	2.3	0.00	0	0.0	WET	0.022
	750	0.000		0.50	0	85.0	NORMAL	0.041
	900	0.013	1.3	0.30	0	5.0	DRY	0.041
		1.026	**99.9**					
TB83	140	0.551	55.3	0.25	30	15.0	NORMAL	0.080
	150	0.345	34.6	0.25	30	15.0	NORMAL	0.080
	180	0.000		0.25	45	5.0	NORMAL	0.080
	200	0.020	2.0	0.10	80	5.0	NORMAL	0.022
	240	0.000		0.10	85	5.0	NORMAL	0.022
	520	0.062	6.3	0.29	40	40.0	NORMAL	0.022
	710	0.017	1.7	0.10	5	80.0	NORMAL	0.022
	730	0.000		0.10	0	5.0	DRY	0.080
	740	0.000		0.00	0	0.0	WET	0.022
	810	0.000		0.10	80	5.0	NORMAL	0.080
		0.995	**99.9**					
TBLO	140	0.000	0.1	0.25	30	15.0	NORMAL	0.105
	150	0.000	0.1	0.25	30	15.0	NORMAL	0.105
	180	0.035	35.6	0.25	45	5.0	NORMAL	0.105
	240	0.063	63.7	0.10	85	5.0	NORMAL	0.029
	810	0.001	0.5	0.10	80	5.0	NORMAL	0.105
		0.099	**100.0**					
TM07	130	0.232	87.6	0.30	15	30.0	NORMAL	0.094
	140	0.000		0.25	30	15.0	NORMAL	0.094
	740	0.008	2.9	0.00	0	0.0	WET	0.026
	900	0.025	9.5	0.30	0	5.0	DRY	0.049
		0.265	**100.0**					
TM35	190	0.000		0.25	45	5.0	NORMAL	0.090
	320	0.340	86.4	0.15	80	0.0	NORMAL	0.025
	810	0.053	13.6	0.10	80	5.0	NORMAL	0.090
		0.393	**100.0**					
TM43	150	0.507	79.7	0.25	30	15.0	NORMAL	0.085
	180	0.012	1.9	0.25	45	5.0	NORMAL	0.085
	190	0.019	3.0	0.25	45	5.0	NORMAL	0.085
	200	0.016	2.4	0.10	80	5.0	NORMAL	0.024
	320	0.019	3.0	0.15	80	0.0	NORMAL	0.024
	520	0.017	2.6	0.29	40	40.0	NORMAL	0.024
	810	0.047	7.4	0.10	80	5.0	NORMAL	0.085
		0.636	**100.0**					
TM51	150	0.488	89.6	0.25	30	15.0	NORMAL	0.086
	200	0.022	4.1	0.10	80	5.0	NORMAL	0.024
	520	0.020	3.7	0.29	40	40.0	NORMAL	0.024
	550	0.007	1.3	0.10	80	10.0	NORMAL	0.024
	710	0.007	1.3	0.10	5	80.0	NORMAL	0.024
		0.545	**100.0**					
TM59	150	0.407	67.8	0.25	30	15.0	NORMAL	0.085
	200	0.019	3.2	0.10	80	5.0	NORMAL	0.024
	520	0.115	19.1	0.29	40	40.0	NORMAL	0.024
	550	0.000		0.10	80	10.0	NORMAL	0.024

Sub Basin	Land Use Code	Area (sq mi)	Area (%)	Initial Loss (IA)	Percent Impervious (RTIMP)	Vegetable Cover (%)	DTHETA	Kb
Major Basin ID: MV								
TM59	730	0.059	9.8	0.10	0	5.0	DRY	0.085
		0.600	**99.9**					
TM67	150	0.670	82.4	0.25	30	15.0	NORMAL	0.082
	180	0.033	4.1	0.25	45	5.0	NORMAL	0.082
	190	0.000		0.25	45	5.0	NORMAL	0.082
	200	0.079	9.7	0.10	80	5.0	NORMAL	0.023
	520	0.031	3.8	0.29	40	40.0	NORMAL	0.023
		0.813	**100.0**					
TM75	150	0.371	37.2	0.25	30	15.0	NORMAL	0.080
	180	0.102	10.2	0.25	45	5.0	NORMAL	0.080
	190	0.178	17.9	0.25	45	5.0	NORMAL	0.080
	200	0.145	14.5	0.10	80	5.0	NORMAL	0.022
	520	0.128	12.9	0.29	40	40.0	NORMAL	0.022
	710	0.059	5.9	0.10	5	80.0	NORMAL	0.022
	900	0.014	1.4	0.30	0	5.0	DRY	0.041
		0.997	**100.0**					
TM83	150	0.851	85.8	0.25	30	15.0	NORMAL	0.080
	180	0.000		0.25	45	5.0	NORMAL	0.080
	200	0.082	8.3	0.10	80	5.0	NORMAL	0.022
	520	0.046	4.7	0.29	40	40.0	NORMAL	0.022
	710	0.012	1.2	0.10	5	80.0	NORMAL	0.022
	750	0.000		0.50	0	85.0	NORMAL	0.041
	900	0.000		0.30	0	5.0	DRY	0.041
		0.992	**100.0**					
TM91	120	0.000		0.30	5	50.0	NORMAL	0.080
	150	0.787	78.5	0.25	30	15.0	NORMAL	0.080
	170	0.081	8.1	0.25	45	10.0	NORMAL	0.080
	180	0.021	2.1	0.25	45	5.0	NORMAL	0.080
	200	0.083	8.3	0.10	80	5.0	NORMAL	0.022
	520	0.031	3.1	0.29	40	40.0	NORMAL	0.022
	750	0.000		0.50	0	85.0	NORMAL	0.041
		1.003	**100.1**					
TM99	610	0.047	9.4	0.10	80	5.0	NORMAL	0.024
	750	0.458	90.6	0.50	0	85.0	NORMAL	0.045
		0.505	**100.0**					
TMAF	130	0.001	0.1	0.30	15	30.0	NORMAL	0.083
	140	0.569	74.6	0.25	30	15.0	NORMAL	0.083
	150	0.000		0.25	30	15.0	NORMAL	0.083
	320	0.147	19.2	0.15	80	0.0	NORMAL	0.023
	730	0.000		0.10	0	5.0	DRY	0.083
	740	0.046	6.0	0.00	0	0.0	WET	0.023
	900	0.000		0.30	0	5.0	DRY	0.043
		0.762	**99.9**					
TMLO	120	0.032	6.5	0.30	5	50.0	NORMAL	0.087
	150	0.000		0.25	30	15.0	NORMAL	0.087
	170	0.000		0.25	45	10.0	NORMAL	0.087
	200	0.003	0.6	0.10	80	5.0	NORMAL	0.024
	610	0.042	8.5	0.10	80	5.0	NORMAL	0.024
	750	0.418	84.3	0.50	0	85.0	NORMAL	0.046
		0.496	**99.9**					
TMRI	200	0.000		0.10	80	5.0	NORMAL	0.026
	710	0.115	48.1	0.10	5	80.0	NORMAL	0.026
	740	0.003	1.3	0.00	0	0.0	WET	0.026
	750	0.121	50.6	0.50	0	85.0	NORMAL	0.050

Sub Basin	Land Use Code	Area (sq mi)	Area (%)	Initial Loss (IA)	Percent Impervious (RTIMP)	Vegetable Cover (%)	DTHETA	Kb
Major Basin ID: MV								
		0.240	100.0					

* Non default value

Future Land Use by Subbasin

Sub Basin	Land Use Code	Area (sq mi)	Area (%)	Initial Loss (IA)	Percent Impervious (RTIMP)	Vegetable Cover (%)	DTHETA	Kb
Major Basin ID: MV								
BH27	150	0.000		0.25	30	15.0	NORMAL	0.095
	180	0.000		0.25	45	5.0	NORMAL	0.095
	190	0.156	60.3	0.25	45	5.0	NORMAL	0.095
	200	0.056	21.5	0.10	80	5.0	NORMAL	0.026
	520	0.027	10.5	0.29	40	40.0	NORMAL	0.026
	550	0.006	2.5	0.10	80	10.0	NORMAL	0.026
	610	0.013	5.1	0.10	80	5.0	NORMAL	0.026
		0.258	**99.9**					
BH35	150	0.795	79.1	0.25	30	15.0	NORMAL	0.080
	180	0.039	3.8	0.25	45	5.0	NORMAL	0.080
	190	0.000		0.25	45	5.0	NORMAL	0.080
	200	0.118	11.8	0.10	80	5.0	NORMAL	0.022
	520	0.053	5.2	0.29	40	40.0	NORMAL	0.022
	550	0.000		0.10	80	10.0	NORMAL	0.022
		1.005	**99.9**					
BH43	150	0.788	79.3	0.25	30	15.0	NORMAL	0.080
	190	0.023	2.3	0.25	45	5.0	NORMAL	0.080
	200	0.054	5.4	0.10	80	5.0	NORMAL	0.022
	520	0.058	5.8	0.29	40	40.0	NORMAL	0.022
	710	0.071	7.2	0.10	5	80.0	NORMAL	0.022
		0.994	**100.0**					
BH51	150	0.375	37.6	0.25	30	15.0	NORMAL	0.080
	180	0.081	8.1	0.25	45	5.0	NORMAL	0.080
	190	0.294	29.5	0.25	45	5.0	NORMAL	0.080
	200	0.152	15.2	0.10	80	5.0	NORMAL	0.022
	320	0.001	0.1	0.15	80	0.0	NORMAL	0.022
	400	0.001	0.1	0.10	80	5.0	NORMAL	0.080
	520	0.051	5.1	0.29	40	40.0	NORMAL	0.022
	710	0.041	4.2	0.10	5	80.0	NORMAL	0.022
		0.996	**99.9**					
BH59	150	0.037	7.4	0.25	30	15.0	NORMAL	0.088
	180	0.022	4.4	0.25	45	5.0	NORMAL	0.088
	190	0.015	3.0	0.25	45	5.0	NORMAL	0.088
	200	0.023	4.7	0.10	80	5.0	NORMAL	0.024
	320	0.369	74.9	0.15	80	0.0	NORMAL	0.024
	550	0.011	2.2	0.10	80	10.0	NORMAL	0.024
	710	0.016	3.2	0.10	5	80.0	NORMAL	0.024
		0.493	**99.8**					
BH67	150	0.527	54.3	0.25	30	15.0	NORMAL	0.080
	170	0.080	8.3	0.25	45	10.0	NORMAL	0.080
	180	0.152	15.7	0.25	45	5.0	NORMAL	0.080
	190	0.066	6.8	0.25	45	5.0	NORMAL	0.080
	200	0.102	10.5	0.10	80	5.0	NORMAL	0.023
	320	0.000		0.15	80	0.0	NORMAL	0.023
	520	0.020	2.1	0.29	40	40.0	NORMAL	0.023
	550	0.010	1.1	0.10	80	10.0	NORMAL	0.023
	710	0.012	1.3	0.10	5	80.0	NORMAL	0.023
		0.970	**100.1**					
BH75	140	0.000		0.25	30	15.0	NORMAL	0.080
	150	0.664	66.2	0.25	30	15.0	NORMAL	0.080
	170	0.004	0.4	0.25	45	10.0	NORMAL	0.080
	180	0.008	0.8	0.25	45	5.0	NORMAL	0.080
	190	0.198	19.8	0.25	45	5.0	NORMAL	0.080
	200	0.034	3.4	0.10	80	5.0	NORMAL	0.022
	320	0.025	2.5	0.15	80	0.0	NORMAL	0.022
	400	0.008	0.8	0.10	80	5.0	NORMAL	0.080

Sub Basin	Land Use Code	Area (sq mi)	Area (%)	Initial Loss (IA)	Percent Impervious (RTIMP)	Vegetable Cover (%)	DTHETA	Kb
Major Basin ID: MV								
BH75	520	0.049	4.9	0.29	40	40.0	NORMAL	0.022
	550	0.001	0.1	0.10	80	10.0	NORMAL	0.022
	710	0.011	1.1	0.10	5	80.0	NORMAL	0.022
		1.003	**100.0**					
BH83	120	0.000		0.30	5	50.0	NORMAL	0.080
	130	0.004	0.4	0.30	15	30.0	NORMAL	0.080
	140	0.372	37.3	0.25	30	15.0	NORMAL	0.080
	150	0.283	28.3	0.25	30	15.0	NORMAL	0.080
	170	0.016	1.6	0.25	45	10.0	NORMAL	0.080
	180	0.000		0.25	45	5.0	NORMAL	0.080
	200	0.056	5.6	0.10	80	5.0	NORMAL	0.022
	400	0.000		0.10	80	5.0	NORMAL	0.080
	520	0.098	9.8	0.29	40	40.0	NORMAL	0.022
	550	0.021	2.1	0.10	80	10.0	NORMAL	0.022
	710	0.148	14.8	0.10	5	80.0	NORMAL	0.022
		0.998	**99.9**					
BH91	120	0.065	6.3	0.30	5	50.0	NORMAL	0.080
	130	0.000		0.30	15	30.0	NORMAL	0.080
	140	0.559	54.1	0.25	30	15.0	NORMAL	0.080
	150	0.198	19.2	0.25	30	15.0	NORMAL	0.080
	200	0.046	4.5	0.10	80	5.0	NORMAL	0.022
	400	0.007	0.7	0.10	80	5.0	NORMAL	0.080
	520	0.023	2.3	0.29	40	40.0	NORMAL	0.022
	710	0.134	13.0	0.10	5	80.0	NORMAL	0.022
		1.032	**100.1**					
BH99	200	0.010	5.7	0.10	80	5.0	NORMAL	0.027
	610	0.045	24.7	0.10	80	5.0	NORMAL	0.027
	730	0.004	2.0	0.10	0	5.0	DRY	0.098
	810	0.124	67.6	0.10	80	5.0	NORMAL	0.098
		0.184	**100.0**					
BHLO	140	0.001	0.1	0.25	30	15.0	NORMAL	0.082
	150	0.000		0.25	30	15.0	NORMAL	0.082
	200	0.000		0.10	80	5.0	NORMAL	0.023
	250	0.704	89.3	0.10	85	0.0	NORMAL	0.023
	550	0.002	0.2	0.10	80	10.0	NORMAL	0.023
	610	0.043	5.4	0.10	80	5.0	NORMAL	0.023
	710	0.038	4.8	0.10	5	80.0	NORMAL	0.023
	810	0.000	0.1	0.10	80	5.0	NORMAL	0.082
		0.788	**99.9**					
BHNR	730	0.029	11.3	0.10	0	5.0	DRY	0.095
	810	0.229	88.7	0.10	80	5.0	NORMAL	0.095
		0.258	**100.0**					
BHRI	200	0.010	1.9	0.10	80	5.0	NORMAL	0.024
	730	0.020	4.0	0.10	0	5.0	DRY	0.087
	810	0.482	94.1	0.10	80	5.0	NORMAL	0.087
		0.512	**100.0**					
CB07	120	0.274	86.2	0.30	5	50.0	NORMAL	0.092
	130	0.030	9.4	0.30	15	30.0	NORMAL	0.092
	150	0.000		0.25	30	15.0	NORMAL	0.092
	710	0.000		0.10	5	80.0	NORMAL	0.026
	730	0.014	4.4	0.10	0	5.0	DRY	0.092
		0.318	**100.0**					
CB27	150	0.087	33.2	0.25	30	15.0	NORMAL	0.094
	180	0.050	19.3	0.25	45	5.0	NORMAL	0.094

Sub Basin	Land Use Code	Area (sq mi)	Area (%)	Initial Loss (IA)	Percent Impervious (RTIMP)	Vegetable Cover (%)	DTHETA	Kb
Major Basin ID: MV								
CB27	200	0.068	25.9	0.10	80	5.0	NORMAL	0.026
	320	0.026	9.9	0.15	80	0.0	NORMAL	0.026
	520	0.018	7.0	0.29	40	40.0	NORMAL	0.026
	610	0.012	4.7	0.10	80	5.0	NORMAL	0.026
		0.262	**100.0**					
CB35	150	0.498	49.8	0.25	30	15.0	NORMAL	0.080
	180	0.167	16.7	0.25	45	5.0	NORMAL	0.080
	190	0.031	3.1	0.25	45	5.0	NORMAL	0.080
	200	0.078	7.8	0.10	80	5.0	NORMAL	0.022
	520	0.192	19.2	0.29	40	40.0	NORMAL	0.022
	550	0.008	0.8	0.10	80	10.0	NORMAL	0.022
	710	0.026	2.6	0.10	5	80.0	NORMAL	0.022
		1.000	**100.0**					
CB43	150	0.803	80.4	0.25	30	15.0	NORMAL	0.080
	180	0.106	10.6	0.25	45	5.0	NORMAL	0.080
	190	0.000		0.25	45	5.0	NORMAL	0.080
	200	0.056	5.6	0.10	80	5.0	NORMAL	0.022
	320	0.000		0.15	80	0.0	NORMAL	0.022
	520	0.033	3.3	0.29	40	40.0	NORMAL	0.022
		0.999	**99.9**					
CB51	200	0.000		0.10	80	5.0	NORMAL	0.024
	320	0.483	100.0	0.15	80	0.0	NORMAL	0.024
	810	0.000		0.10	80	5.0	NORMAL	0.088
		0.483	**100.0**					
CB59	150	0.000		0.25	30	15.0	NORMAL	0.080
	180	0.111	11.0	0.25	45	5.0	NORMAL	0.080
	190	0.091	9.0	0.25	45	5.0	NORMAL	0.080
	200	0.106	10.5	0.10	80	5.0	NORMAL	0.022
	320	0.608	60.2	0.15	80	0.0	NORMAL	0.022
	710	0.016	1.5	0.10	5	80.0	NORMAL	0.022
	810	0.079	7.8	0.10	80	5.0	NORMAL	0.080
		1.010	**100.0**					
CB67	150	0.640	65.9	0.25	30	15.0	NORMAL	0.080
	170	0.000		0.25	45	10.0	NORMAL	0.080
	180	0.101	10.4	0.25	45	5.0	NORMAL	0.080
	190	0.116	11.9	0.25	45	5.0	NORMAL	0.080
	200	0.051	5.3	0.10	80	5.0	NORMAL	0.023
	520	0.040	4.1	0.29	40	40.0	NORMAL	0.023
	710	0.022	2.3	0.10	5	80.0	NORMAL	0.023
		0.970	**99.9**					
CB75	150	0.858	85.9	0.25	30	15.0	NORMAL	0.080
	170	0.031	3.1	0.25	45	10.0	NORMAL	0.080
	180	0.011	1.1	0.25	45	5.0	NORMAL	0.080
	190	0.016	1.6	0.25	45	5.0	NORMAL	0.080
	200	0.039	3.9	0.10	80	5.0	NORMAL	0.022
	520	0.032	3.2	0.29	40	40.0	NORMAL	0.022
	550	0.000		0.10	80	10.0	NORMAL	0.022
	710	0.011	1.1	0.10	5	80.0	NORMAL	0.022
		0.998	**99.9**					
CB83	120	0.052	9.4	0.30	5	50.0	NORMAL	0.086
	130	0.301	54.4	0.30	15	30.0	NORMAL	0.086
	150	0.173	31.3	0.25	30	15.0	NORMAL	0.086
	200	0.009	1.7	0.10	80	5.0	NORMAL	0.024
	710	0.018	3.3	0.10	5	80.0	NORMAL	0.024

Sub Basin	Land Use Code	Area (sq mi)	Area (%)	Initial Loss (IA)	Percent Impervious (RTIMP)	Vegetable Cover (%)	DTHETA	Kb
Major Basin ID: MV								
		0.554	**100.1**					
CB91	120	0.000		0.30	5	50.0	NORMAL	0.080
	130	0.187	19.4	0.30	15	30.0	NORMAL	0.080
	140	0.698	72.6	0.25	30	15.0	NORMAL	0.080
	200	0.023	2.4	0.10	80	5.0	NORMAL	0.023
	520	0.022	2.3	0.29	40	40.0	NORMAL	0.023
	550	0.002	0.2	0.10	80	10.0	NORMAL	0.023
	710	0.028	3.0	0.10	5	80.0	NORMAL	0.023
		0.961	**99.9**					
CB99	180	0.000		0.25	45	5.0	NORMAL	0.097
	200	0.031	15.6	0.10	80	5.0	NORMAL	0.027
	400	0.039	19.5	0.10	80	5.0	NORMAL	0.097
	550	0.006	3.0	0.10	80	10.0	NORMAL	0.027
	610	0.043	21.4	0.10	80	5.0	NORMAL	0.027
	730	0.002	1.1	0.10	0	5.0	DRY	0.097
	810	0.079	39.4	0.10	80	5.0	NORMAL	0.097
		0.201	**100.0**					
CBLO	120	0.128	15.7	0.30	5	50.0	NORMAL	0.082
	130	0.037	4.5	0.30	15	30.0	NORMAL	0.082
	140	0.003	0.4	0.25	30	15.0	NORMAL	0.082
	170	0.066	8.0	0.25	45	10.0	NORMAL	0.082
	200	0.127	15.5	0.10	80	5.0	NORMAL	0.023
	220	0.118	14.4	0.10	75	10.0	NORMAL	0.023
	400	0.004	0.5	0.10	80	5.0	NORMAL	0.082
	520	0.112	13.7	0.29	40	40.0	NORMAL	0.023
	550	0.000		0.10	80	10.0	NORMAL	0.023
	610	0.037	4.5	0.10	80	5.0	NORMAL	0.023
	710	0.030	3.7	0.10	5	80.0	NORMAL	0.023
	810	0.158	19.3	0.10	80	5.0	NORMAL	0.082
		0.818	**100.2**					
CBNR	120	0.002	0.4	0.30	5	50.0	NORMAL	0.088
	130	0.064	13.6	0.30	15	30.0	NORMAL	0.088
	150	0.002	0.4	0.25	30	15.0	NORMAL	0.088
	170	0.000	0.1	0.25	45	10.0	NORMAL	0.088
	200	0.000		0.10	80	5.0	NORMAL	0.025
	710	0.294	63.2	0.10	5	80.0	NORMAL	0.025
	730	0.104	22.2	0.10	0	5.0	DRY	0.088
		0.466	**99.9**					
CBRI	120	0.007	1.0	0.30	5	50.0	NORMAL	0.084
	130	0.000		0.30	15	30.0	NORMAL	0.084
	150	0.419	60.0	0.25	30	15.0	NORMAL	0.084
	180	0.179	25.7	0.25	45	5.0	NORMAL	0.084
	190	0.063	9.0	0.25	45	5.0	NORMAL	0.084
	200	0.017	2.4	0.10	80	5.0	NORMAL	0.023
	400	0.000		0.10	80	5.0	NORMAL	0.084
	520	0.000		0.29	40	40.0	NORMAL	0.023
	550	0.000		0.10	80	10.0	NORMAL	0.023
	730	0.014	1.9	0.10	0	5.0	DRY	0.084
	810	0.000		0.10	80	5.0	NORMAL	0.084
		0.699	**100.0**					
CT59	150	0.247	83.5	0.25	30	15.0	NORMAL	0.093
	200	0.008	2.7	0.10	80	5.0	NORMAL	0.026
	520	0.019	6.3	0.29	40	40.0	NORMAL	0.026
	530	0.000		0.10	80	5.0	NORMAL	0.093
	710	0.022	7.5	0.10	5	80.0	NORMAL	0.026

Sub Basin	Land Use Code	Area (sq mi)	Area (%)	Initial Loss (IA)	Percent Impervious (RTIMP)	Vegetable Cover (%)	DTHETA	Kb
Major Basin ID: MV								
		0.296	**100.0**					
CT67	120	0.000		0.30	5	50.0	NORMAL	0.081
	130	0.491	54.0	0.30	15	30.0	NORMAL	0.081
	140	0.092	10.1	0.25	30	15.0	NORMAL	0.081
	150	0.117	12.8	0.25	30	15.0	NORMAL	0.081
	200	0.026	2.8	0.10	80	5.0	NORMAL	0.023
	400	0.018	2.0	0.10	80	5.0	NORMAL	0.081
	520	0.081	8.9	0.29	40	40.0	NORMAL	0.023
	530	0.061	6.7	0.10	80	5.0	NORMAL	0.081
	550	0.003	0.3	0.10	80	10.0	NORMAL	0.023
	710	0.021	2.3	0.10	5	80.0	NORMAL	0.023
		0.910	**99.9**					
CT75	130	0.235	23.4	0.30	15	30.0	NORMAL	0.080
	140	0.716	71.4	0.25	30	15.0	NORMAL	0.080
	150	0.028	2.8	0.25	30	15.0	NORMAL	0.080
	200	0.001	0.1	0.10	80	5.0	NORMAL	0.022
	400	0.001	0.1	0.10	80	5.0	NORMAL	0.080
	520	0.022	2.2	0.29	40	40.0	NORMAL	0.022
		1.003	**100.0**					
CT83	140	0.979	97.0	0.25	30	15.0	NORMAL	0.080
	150	0.000		0.25	30	15.0	NORMAL	0.080
	200	0.000		0.10	80	5.0	NORMAL	0.022
	240	0.000		0.10	85	5.0	NORMAL	0.022
	520	0.030	2.9	0.29	40	40.0	NORMAL	0.022
		1.008	**99.9**					
CTLO	140	0.553	63.9	0.25	30	15.0	NORMAL	0.081
	240	0.038	4.4	0.10	85	5.0	NORMAL	0.023
	320	0.035	4.1	0.15	80	0.0	NORMAL	0.023
	520	0.022	2.5	0.29	40	40.0	NORMAL	0.023
	610	0.075	8.7	0.10	80	5.0	NORMAL	0.023
	810	0.142	16.4	0.10	80	5.0	NORMAL	0.081
		0.865	**100.0**					
GC35	320	0.077	100.0	0.15	80	0.0	NORMAL	0.029
		0.077	**100.0**					
GC43	150	0.000		0.25	30	15.0	NORMAL	0.091
	190	0.000		0.25	45	5.0	NORMAL	0.091
	200	0.001	0.1	0.10	80	5.0	NORMAL	0.025
	320	0.369	99.8	0.15	80	0.0	NORMAL	0.025
		0.370	**99.9**					
GC51	150	0.358	80.0	0.25	30	15.0	NORMAL	0.089
	190	0.033	7.5	0.25	45	5.0	NORMAL	0.089
	200	0.036	7.9	0.10	80	5.0	NORMAL	0.025
	320	0.000		0.15	80	0.0	NORMAL	0.025
	520	0.016	3.5	0.29	40	40.0	NORMAL	0.025
	550	0.005	1.1	0.10	80	10.0	NORMAL	0.025
		0.448	**100.0**					
GC59	150	0.158	38.6	0.25	30	15.0	NORMAL	0.090
	190	0.041	10.1	0.25	45	5.0	NORMAL	0.090
	200	0.056	13.6	0.10	80	5.0	NORMAL	0.025
	520	0.154	37.6	0.29	40	40.0	NORMAL	0.025
	550	0.000		0.10	80	10.0	NORMAL	0.025
	720	0.000		0.10	5	90.0	NORMAL	0.025
		0.410	**99.9**					

Sub Basin	Land Use Code	Area (sq mi)	Area (%)	Initial Loss (IA)	Percent Impervious (RTIMP)	Vegetable Cover (%)	DTHETA	Kb
Major Basin ID: MV								
GC67	150	0.553	59.0	0.25	30	15.0	NORMAL	0.081
	180	0.066	7.1	0.25	45	5.0	NORMAL	0.081
	200	0.029	3.1	0.10	80	5.0	NORMAL	0.023
	520	0.071	7.5	0.29	40	40.0	NORMAL	0.023
	710	0.000		0.10	5	80.0	NORMAL	0.023
	720	0.218	23.3	0.10	5	90.0	NORMAL	0.023
		0.937	**100.0**					
GC75	150	0.352	85.6	0.25	30	15.0	NORMAL	0.090
	180	0.032	7.8	0.25	45	5.0	NORMAL	0.090
	200	0.018	4.3	0.10	80	5.0	NORMAL	0.025
	710	0.009	2.3	0.10	5	80.0	NORMAL	0.025
		0.411	**100.0**					
GC83	140	0.274	64.3	0.25	30	15.0	NORMAL	0.089
	150	0.059	13.7	0.25	30	15.0	NORMAL	0.089
	200	0.000	0.1	0.10	80	5.0	NORMAL	0.025
	400	0.008	1.8	0.10	80	5.0	NORMAL	0.089
	520	0.022	5.2	0.29	40	40.0	NORMAL	0.025
	550	0.012	2.7	0.10	80	10.0	NORMAL	0.025
	710	0.052	12.2	0.10	5	80.0	NORMAL	0.025
		0.426	**100.0**					
GCGR	190	0.035	9.2	0.25	45	5.0	NORMAL	0.090
	200	0.054	14.4	0.10	80	5.0	NORMAL	0.025
	320	0.268	71.1	0.15	80	0.0	NORMAL	0.025
	610	0.005	1.3	0.10	80	5.0	NORMAL	0.025
	810	0.015	4.0	0.10	80	5.0	NORMAL	0.090
		0.376	**100.0**					
GL27	150	0.081	31.4	0.25	30	15.0	NORMAL	0.095
	180	0.145	56.2	0.25	45	5.0	NORMAL	0.095
	200	0.018	7.1	0.10	80	5.0	NORMAL	0.026
	520	0.000		0.29	40	40.0	NORMAL	0.026
	550	0.000		0.10	80	10.0	NORMAL	0.026
	610	0.013	5.2	0.10	80	5.0	NORMAL	0.026
		0.258	**99.9**					
GL35	150	0.821	81.7	0.25	30	15.0	NORMAL	0.080
	180	0.069	6.9	0.25	45	5.0	NORMAL	0.080
	190	0.000		0.25	45	5.0	NORMAL	0.080
	200	0.053	5.3	0.10	80	5.0	NORMAL	0.022
	520	0.000		0.29	40	40.0	NORMAL	0.022
	550	0.029	2.9	0.10	80	10.0	NORMAL	0.022
	710	0.031	3.1	0.10	5	80.0	NORMAL	0.022
		1.004	**99.9**					
GL43	150	0.849	85.1	0.25	30	15.0	NORMAL	0.080
	190	0.000		0.25	45	5.0	NORMAL	0.080
	200	0.109	11.0	0.10	80	5.0	NORMAL	0.022
	520	0.039	3.9	0.29	40	40.0	NORMAL	0.022
		0.998	**100.0**					
GL51	130	0.016	1.6	0.30	15	30.0	NORMAL	0.080
	140	0.125	12.5	0.25	30	15.0	NORMAL	0.080
	150	0.419	41.8	0.25	30	15.0	NORMAL	0.080
	170	0.011	1.1	0.25	45	10.0	NORMAL	0.080
	180	0.052	5.2	0.25	45	5.0	NORMAL	0.080
	190	0.173	17.2	0.25	45	5.0	NORMAL	0.080
	200	0.145	14.5	0.10	80	5.0	NORMAL	0.022
	220	0.000		0.10	75	10.0	NORMAL	0.022
	400	0.016	1.6	0.10	80	5.0	NORMAL	0.080

Sub Basin	Land Use Code	Area (sq mi)	Area (%)	Initial Loss (IA)	Percent Impervious (RTIMP)	Vegetable Cover (%)	DTHETA	Kb
Major Basin ID: MV								
GL51	520	0.030	3.0	0.29	40	40.0	NORMAL	0.022
	550	0.008	0.8	0.10	80	10.0	NORMAL	0.022
	710	0.008	0.8	0.10	5	80.0	NORMAL	0.022
		1.002	**100.1**					
GL59	140	0.137	13.5	0.25	30	15.0	NORMAL	0.080
	150	0.288	28.4	0.25	30	15.0	NORMAL	0.080
	170	0.061	6.0	0.25	45	10.0	NORMAL	0.080
	180	0.071	7.0	0.25	45	5.0	NORMAL	0.080
	190	0.098	9.7	0.25	45	5.0	NORMAL	0.080
	200	0.129	12.7	0.10	80	5.0	NORMAL	0.022
	220	0.135	13.3	0.10	75	10.0	NORMAL	0.022
	400	0.010	1.0	0.10	80	5.0	NORMAL	0.080
	520	0.036	3.6	0.29	40	40.0	NORMAL	0.022
	550	0.017	1.7	0.10	80	10.0	NORMAL	0.022
	710	0.031	3.1	0.10	5	80.0	NORMAL	0.022
		1.015	**100.0**					
GL67	170	0.000		0.25	45	10.0	NORMAL	0.091
	180	0.025	7.0	0.25	45	5.0	NORMAL	0.091
	190	0.081	22.6	0.25	45	5.0	NORMAL	0.091
	200	0.028	7.7	0.10	80	5.0	NORMAL	0.025
	220	0.020	5.5	0.10	75	10.0	NORMAL	0.025
	320	0.094	26.1	0.15	80	0.0	NORMAL	0.025
	520	0.056	15.5	0.29	40	40.0	NORMAL	0.025
	550	0.055	15.4	0.10	80	10.0	NORMAL	0.025
		0.359	**99.8**					
GL75	140	0.000		0.25	30	15.0	NORMAL	0.087
	150	0.090	18.0	0.25	30	15.0	NORMAL	0.087
	170	0.327	65.5	0.25	45	10.0	NORMAL	0.087
	180	0.012	2.3	0.25	45	5.0	NORMAL	0.087
	190	0.023	4.5	0.25	45	5.0	NORMAL	0.087
	200	0.044	8.8	0.10	80	5.0	NORMAL	0.024
	320	0.000		0.15	80	0.0	NORMAL	0.024
	550	0.004	0.7	0.10	80	10.0	NORMAL	0.024
	710	0.000		0.10	5	80.0	NORMAL	0.024
		0.500	**99.8**					
GL83	130	0.065	13.2	0.30	15	30.0	NORMAL	0.087
	140	0.177	35.8	0.25	30	15.0	NORMAL	0.087
	150	0.132	26.6	0.25	30	15.0	NORMAL	0.087
	170	0.059	11.8	0.25	45	10.0	NORMAL	0.087
	180	0.023	4.7	0.25	45	5.0	NORMAL	0.087
	190	0.000		0.25	45	5.0	NORMAL	0.087
	200	0.008	1.5	0.10	80	5.0	NORMAL	0.024
	520	0.020	4.1	0.29	40	40.0	NORMAL	0.024
	710	0.011	2.2	0.10	5	80.0	NORMAL	0.024
		0.495	**99.9**					
GL91	130	0.179	18.2	0.30	15	30.0	NORMAL	0.080
	140	0.532	54.3	0.25	30	15.0	NORMAL	0.080
	150	0.000		0.25	30	15.0	NORMAL	0.080
	170	0.058	5.9	0.25	45	10.0	NORMAL	0.080
	200	0.070	7.2	0.10	80	5.0	NORMAL	0.023
	240	0.000		0.10	85	5.0	NORMAL	0.023
	400	0.034	3.5	0.10	80	5.0	NORMAL	0.080
	520	0.098	10.0	0.29	40	40.0	NORMAL	0.023
	710	0.008	0.8	0.10	5	80.0	NORMAL	0.023
	810	0.000		0.10	80	5.0	NORMAL	0.080
		0.979	**99.9**					

* Non default value

Sub Basin	Land Use Code	Area (sq mi)	Area (%)	Initial Loss (IA)	Percent Impervious (RTIMP)	Vegetable Cover (%)	DTHETA	Kb
Major Basin ID: MV								
GLLO	140	0.000		0.25	30	15.0	NORMAL	0.082
	170	0.000		0.25	45	10.0	NORMAL	0.082
	200	0.000		0.10	80	5.0	NORMAL	0.023
	240	0.004	0.5	0.10	85	5.0	NORMAL	0.023
	250	0.000		0.10	85	0.0	NORMAL	0.023
	400	0.000		0.10	80	5.0	NORMAL	0.082
	520	0.000		0.29	40	40.0	NORMAL	0.023
	610	0.063	7.5	0.10	80	5.0	NORMAL	0.023
	810	0.779	91.9	0.10	80	5.0	NORMAL	0.082
		0.848	**99.9**					
GLNR	140	0.001	0.2	0.25	30	15.0	NORMAL	0.088
	200	0.022	4.6	0.10	80	5.0	NORMAL	0.024
	240	0.000		0.10	85	5.0	NORMAL	0.024
	610	0.048	10.0	0.10	80	5.0	NORMAL	0.024
	710	0.014	3.0	0.10	5	80.0	NORMAL	0.024
	730	0.010	2.0	0.10	0	5.0	DRY	0.088
	810	0.388	80.3	0.10	80	5.0	NORMAL	0.088
		0.483	**100.1**					
GR27	150	0.090	22.0	0.25	30	15.0	NORMAL	0.090
	190	0.036	8.9	0.25	45	5.0	NORMAL	0.090
	320	0.269	66.1	0.15	80	0.0	NORMAL	0.025
	610	0.012	3.0	0.10	80	5.0	NORMAL	0.025
	810	0.000	0.1	0.10	80	5.0	NORMAL	0.090
		0.407	**100.1**					
GR35	150	0.206	38.8	0.25	30	15.0	NORMAL	0.087
	180	0.027	5.2	0.25	45	5.0	NORMAL	0.087
	190	0.041	7.7	0.25	45	5.0	NORMAL	0.087
	200	0.164	30.9	0.10	80	5.0	NORMAL	0.024
	320	0.030	5.7	0.15	80	0.0	NORMAL	0.024
	520	0.063	11.8	0.29	40	40.0	NORMAL	0.024
		0.531	**100.1**					
GR43	150	0.155	30.2	0.25	30	15.0	NORMAL	0.087
	180	0.056	10.9	0.25	45	5.0	NORMAL	0.087
	190	0.078	15.2	0.25	45	5.0	NORMAL	0.087
	200	0.036	7.1	0.10	80	5.0	NORMAL	0.024
	320	0.139	27.1	0.15	80	0.0	NORMAL	0.024
	520	0.033	6.4	0.29	40	40.0	NORMAL	0.024
	710	0.016	3.1	0.10	5	80.0	NORMAL	0.024
		0.514	**100.0**					
GR59	150	0.117	22.6	0.25	30	15.0	NORMAL	0.087
	170	0.013	2.6	0.25	45	10.0	NORMAL	0.087
	190	0.044	8.5	0.25	45	5.0	NORMAL	0.087
	200	0.207	40.0	0.10	80	5.0	NORMAL	0.024
	220	0.067	13.0	0.10	75	10.0	NORMAL	0.024
	320	0.019	3.6	0.15	80	0.0	NORMAL	0.024
	520	0.018	3.5	0.29	40	40.0	NORMAL	0.024
	550	0.024	4.7	0.10	80	10.0	NORMAL	0.024
	710	0.008	1.4	0.10	5	80.0	NORMAL	0.024
		0.518	**99.9**					
GR67	140	0.014	2.9	0.25	30	15.0	NORMAL	0.087
	150	0.145	29.1	0.25	30	15.0	NORMAL	0.087
	170	0.000		0.25	45	10.0	NORMAL	0.087
	180	0.003	0.6	0.25	45	5.0	NORMAL	0.087
	190	0.014	2.9	0.25	45	5.0	NORMAL	0.087
	200	0.041	8.1	0.10	80	5.0	NORMAL	0.024
	220	0.032	6.5	0.10	75	10.0	NORMAL	0.024

* Non default value

Sub Basin	Land Use Code	Area (sq mi)	Area (%)	Initial Loss (IA)	Percent Impervious (RTIMP)	Vegetable Cover (%)	DTHETA	Kb
Major Basin ID: MV								
GR67	320	0.107	21.5	0.15	80	0.0	NORMAL	0.024
	400	0.015	3.0	0.10	80	5.0	NORMAL	0.087
	550	0.002	0.5	0.10	80	10.0	NORMAL	0.024
	710	0.124	25.0	0.10	5	80.0	NORMAL	0.024
		0.497	**100.1**					
GR75	140	0.001	0.1	0.25	30	15.0	NORMAL	0.087
	150	0.062	12.5	0.25	30	15.0	NORMAL	0.087
	170	0.056	11.2	0.25	45	10.0	NORMAL	0.087
	180	0.055	11.0	0.25	45	5.0	NORMAL	0.087
	190	0.160	32.1	0.25	45	5.0	NORMAL	0.087
	200	0.013	2.5	0.10	80	5.0	NORMAL	0.024
	240	0.004	0.7	0.10	85	5.0	NORMAL	0.024
	320	0.080	16.2	0.15	80	0.0	NORMAL	0.024
	550	0.008	1.6	0.10	80	10.0	NORMAL	0.024
	610	0.058	11.6	0.10	80	5.0	NORMAL	0.024
	710	0.000		0.10	5	80.0	NORMAL	0.024
	810	0.002	0.3	0.10	80	5.0	NORMAL	0.087
		0.497	**99.8**					
GR83	140	0.121	25.8	0.25	30	15.0	NORMAL	0.088
	150	0.060	12.7	0.25	30	15.0	NORMAL	0.088
	200	0.080	17.0	0.10	80	5.0	NORMAL	0.025
	220	0.046	9.7	0.10	75	10.0	NORMAL	0.025
	520	0.029	6.2	0.29	40	40.0	NORMAL	0.025
	550	0.000		0.10	80	10.0	NORMAL	0.025
	810	0.133	28.5	0.10	80	5.0	NORMAL	0.088
		0.468	**99.9**					
GR91	140	0.236	45.9	0.25	30	15.0	NORMAL	0.087
	150	0.114	22.1	0.25	30	15.0	NORMAL	0.087
	220	0.020	3.9	0.10	75	10.0	NORMAL	0.024
	320	0.029	5.6	0.15	80	0.0	NORMAL	0.024
	520	0.076	14.8	0.29	40	40.0	NORMAL	0.024
	610	0.004	0.8	0.10	80	5.0	NORMAL	0.024
	810	0.035	6.9	0.10	80	5.0	NORMAL	0.087
		0.514	**100.0**					
GW83	120	0.010	3.5	0.30	5	50.0	NORMAL	0.093
	140	0.257	88.1	0.25	30	15.0	NORMAL	0.093
	520	0.024	8.1	0.29	40	40.0	NORMAL	0.026
	740	0.001	0.3	0.00	0	0.0	WET	0.026
		0.291	**100.0**					
IN07	180	0.000	0.1	0.25	45	5.0	NORMAL	0.095
	230	0.021	8.1	0.10	85	5.0	NORMAL	0.026
	240	0.152	59.1	0.10	85	5.0	NORMAL	0.026
	610	0.083	32.3	0.10	80	5.0	NORMAL	0.026
	810	0.001	0.4	0.10	80	5.0	NORMAL	0.095
		0.256	**100.0**					
IN27	200	0.000	0.1	0.10	80	5.0	NORMAL	0.029
	320	0.087	82.7	0.15	80	0.0	NORMAL	0.029
	610	0.018	17.2	0.10	80	5.0	NORMAL	0.029
		0.106	**100.0**					
IN35	150	0.046	18.8	0.25	30	15.0	NORMAL	0.095
	180	0.029	12.1	0.25	45	5.0	NORMAL	0.095
	200	0.056	23.2	0.10	80	5.0	NORMAL	0.026
	320	0.062	25.4	0.15	80	0.0	NORMAL	0.026
	520	0.016	6.7	0.29	40	40.0	NORMAL	0.026
	610	0.033	13.8	0.10	80	5.0	NORMAL	0.026

Sub Basin	Land Use Code	Area (sq mi)	Area (%)	Initial Loss (IA)	Percent Impervious (RTIMP)	Vegetable Cover (%)	DTHETA	Kb
Major Basin ID: MV								
		0.243	**100.0**					
IN43	150	0.134	52.4	0.25	30	15.0	NORMAL	0.095
	190	0.033	13.1	0.25	45	5.0	NORMAL	0.095
	200	0.045	17.5	0.10	80	5.0	NORMAL	0.026
	610	0.044	17.1	0.10	80	5.0	NORMAL	0.026
		0.256	**100.1**					
IN51	200	0.072	30.9	0.10	80	5.0	NORMAL	0.026
	320	0.107	46.3	0.15	80	0.0	NORMAL	0.026
	610	0.053	22.8	0.10	80	5.0	NORMAL	0.026
		0.232	**100.0**					
IN59	190	0.124	61.3	0.25	45	5.0	NORMAL	0.097
	200	0.018	9.1	0.10	80	5.0	NORMAL	0.027
	610	0.060	29.6	0.10	80	5.0	NORMAL	0.027
		0.202	**100.0**					
IN67	190	0.136	68.9	0.25	45	5.0	NORMAL	0.097
	200	0.005	2.6	0.10	80	5.0	NORMAL	0.027
	610	0.056	28.5	0.10	80	5.0	NORMAL	0.027
		0.197	**100.0**					
IN75	150	0.000	0.1	0.25	30	15.0	NORMAL	0.097
	190	0.093	46.4	0.25	45	5.0	NORMAL	0.097
	200	0.044	22.0	0.10	80	5.0	NORMAL	0.027
	610	0.063	31.6	0.10	80	5.0	NORMAL	0.027
		0.199	**100.1**					
IN83	190	0.089	45.6	0.25	45	5.0	NORMAL	0.098
	200	0.017	8.8	0.10	80	5.0	NORMAL	0.027
	230	0.000	0.1	0.10	85	5.0	NORMAL	0.027
	320	0.036	18.2	0.15	80	0.0	NORMAL	0.027
	610	0.054	27.4	0.10	80	5.0	NORMAL	0.027
		0.196	**100.1**					
IN91	190	0.000	0.1	0.25	45	5.0	NORMAL	0.098
	200	0.009	4.6	0.10	80	5.0	NORMAL	0.027
	220	0.026	13.9	0.10	75	10.0	NORMAL	0.027
	230	0.048	26.0	0.10	85	5.0	NORMAL	0.027
	320	0.027	14.3	0.15	80	0.0	NORMAL	0.027
	610	0.071	38.1	0.10	80	5.0	NORMAL	0.027
	730	0.006	3.0	0.10	0	5.0	DRY	0.098
		0.185	**100.0**					
INAF	140	0.001	0.1	0.25	30	15.0	NORMAL	0.088
	180	0.154	32.5	0.25	45	5.0	NORMAL	0.088
	240	0.077	16.3	0.10	85	5.0	NORMAL	0.024
	320	0.000		0.15	80	0.0	NORMAL	0.024
	610	0.067	14.1	0.10	80	5.0	NORMAL	0.024
	710	0.173	36.5	0.10	5	80.0	NORMAL	0.024
	730	0.002	0.3	0.10	0	5.0	DRY	0.088
	810	0.000	0.1	0.10	80	5.0	NORMAL	0.088
		0.473	**99.9**					
INAV	140	0.001	0.4	0.25	30	15.0	NORMAL	0.096
	220	0.011	4.5	0.10	75	10.0	NORMAL	0.026
	230	0.014	6.1	0.10	85	5.0	NORMAL	0.026
	240	0.124	52.9	0.10	85	5.0	NORMAL	0.026
	610	0.056	23.9	0.10	80	5.0	NORMAL	0.026
	810	0.029	12.3	0.10	80	5.0	NORMAL	0.096

Sub Basin	Land Use Code	Area (sq mi)	Area (%)	Initial Loss (IA)	Percent Impervious (RTIMP)	Vegetable Cover (%)	DTHETA	Kb
Major Basin ID: MV								
		0.235	**100.1**					
INLO	180	0.000	0.1	0.25	45	5.0	NORMAL	0.101
	200	0.000	0.1	0.10	80	5.0	NORMAL	0.028
	220	0.070	47.6	0.10	75	10.0	NORMAL	0.028
	230	0.009	5.8	0.10	85	5.0	NORMAL	0.028
	610	0.068	46.5	0.10	80	5.0	NORMAL	0.028
		0.147	**100.1**					
IS07	150	0.606	59.4	0.25	30	15.0	NORMAL	0.080
	180	0.029	2.9	0.25	45	5.0	NORMAL	0.080
	190	0.033	3.3	0.25	45	5.0	NORMAL	0.080
	200	0.114	11.2	0.10	80	5.0	NORMAL	0.022
	520	0.038	3.7	0.29	40	40.0	NORMAL	0.022
	720	0.200	19.6	0.10	5	90.0	NORMAL	0.022
		1.021	**100.1**					
IS27	150	0.000	0.1	0.25	30	15.0	NORMAL	0.095
	190	0.152	63.6	0.25	45	5.0	NORMAL	0.095
	200	0.076	31.9	0.10	80	5.0	NORMAL	0.026
	320	0.000		0.15	80	0.0	NORMAL	0.026
	610	0.011	4.4	0.10	80	5.0	NORMAL	0.026
		0.239	**100.0**					
IS35	150	0.764	77.2	0.25	30	15.0	NORMAL	0.080
	180	0.000		0.25	45	5.0	NORMAL	0.080
	190	0.044	4.4	0.25	45	5.0	NORMAL	0.080
	200	0.031	3.2	0.10	80	5.0	NORMAL	0.022
	320	0.000		0.15	80	0.0	NORMAL	0.022
	520	0.080	8.1	0.29	40	40.0	NORMAL	0.022
	710	0.071	7.2	0.10	5	80.0	NORMAL	0.022
		0.990	**100.1**					
IS43	320	0.467	100.0	0.15	80	0.0	NORMAL	0.025
		0.467	**100.0**					
IS51	150	0.397	39.9	0.25	30	15.0	NORMAL	0.080
	190	0.000		0.25	45	5.0	NORMAL	0.080
	200	0.021	2.2	0.10	80	5.0	NORMAL	0.022
	320	0.528	53.1	0.15	80	0.0	NORMAL	0.022
	520	0.021	2.2	0.29	40	40.0	NORMAL	0.022
	550	0.000		0.10	80	10.0	NORMAL	0.022
	810	0.026	2.6	0.10	80	5.0	NORMAL	0.080
		0.994	**100.0**					
IS59	150	0.640	63.1	0.25	30	15.0	NORMAL	0.080
	190	0.132	13.0	0.25	45	5.0	NORMAL	0.080
	200	0.143	14.1	0.10	80	5.0	NORMAL	0.022
	320	0.000		0.15	80	0.0	NORMAL	0.022
	520	0.035	3.5	0.29	40	40.0	NORMAL	0.022
	550	0.062	6.2	0.10	80	10.0	NORMAL	0.022
	720	0.001		0.10	5	90.0	NORMAL	0.022
	810	0.001	0.1	0.10	80	5.0	NORMAL	0.080
		1.014	**100.0**					
IS75	150	0.393	63.9	0.25	30	15.0	NORMAL	0.085
	180	0.093	15.2	0.25	45	5.0	NORMAL	0.085
	190	0.000		0.25	45	5.0	NORMAL	0.085
	200	0.098	15.9	0.10	80	5.0	NORMAL	0.024
	520	0.031	5.0	0.29	40	40.0	NORMAL	0.024
		0.615	**100.0**					

* Non default value

Sub Basin	Land Use Code	Area (sq mi)	Area (%)	Initial Loss (IA)	Percent Impervious (RTIMP)	Vegetable Cover (%)	DTHETA	Kb
Major Basin ID: MV								
IS83	120	0.001	0.1	0.30	5	50.0	NORMAL	0.080
	130	0.003	0.3	0.30	15	30.0	NORMAL	0.080
	150	0.873	88.1	0.25	30	15.0	NORMAL	0.080
	170	0.000		0.25	45	10.0	NORMAL	0.080
	190	0.014	1.4	0.25	45	5.0	NORMAL	0.080
	200	0.079	8.0	0.10	80	5.0	NORMAL	0.022
	520	0.022	2.2	0.29	40	40.0	NORMAL	0.022
		0.991	**100.1**					
IS91	130	0.001	0.1	0.30	15	30.0	NORMAL	0.080
	140	0.005	0.5	0.25	30	15.0	NORMAL	0.080
	150	0.631	63.1	0.25	30	15.0	NORMAL	0.080
	170	0.197	19.8	0.25	45	10.0	NORMAL	0.080
	180	0.046	4.6	0.25	45	5.0	NORMAL	0.080
	200	0.046	4.6	0.10	80	5.0	NORMAL	0.022
	520	0.074	7.4	0.29	40	40.0	NORMAL	0.022
		0.999	**100.1**					
IS99	150	0.003	0.8	0.25	30	15.0	NORMAL	0.092
	200	0.273	84.6	0.10	80	5.0	NORMAL	0.026
	610	0.047	14.6	0.10	80	5.0	NORMAL	0.026
		0.323	**100.0**					
ISAF	150	0.560	56.6	0.25	30	15.0	NORMAL	0.080
	170	0.093	9.4	0.25	45	10.0	NORMAL	0.080
	200	0.068	6.8	0.10	80	5.0	NORMAL	0.022
	320	0.235	23.7	0.15	80	0.0	NORMAL	0.022
	520	0.034	3.5	0.29	40	40.0	NORMAL	0.022
	710	0.000		0.10	5	80.0	NORMAL	0.022
		0.989	**100.0**					
ISGC	150	0.143	90.1	0.25	30	15.0	NORMAL	0.100
	520	0.009	5.7	0.29	40	40.0	NORMAL	0.027
	550	0.006	3.6	0.10	80	10.0	NORMAL	0.027
	720	0.001	0.6	0.10	5	90.0	NORMAL	0.027
		0.159	**100.0**					
ISLO	120	0.047	6.9	0.30	5	50.0	NORMAL	0.084
	140	0.000		0.25	30	15.0	NORMAL	0.084
	150	0.249	36.3	0.25	30	15.0	NORMAL	0.084
	170	0.001	0.1	0.25	45	10.0	NORMAL	0.084
	180	0.001	0.2	0.25	45	5.0	NORMAL	0.084
	200	0.337	49.3	0.10	80	5.0	NORMAL	0.023
	220	0.004	0.5	0.10	75	10.0	NORMAL	0.023
	400	0.000	0.1	0.10	80	5.0	NORMAL	0.084
	520	0.002	0.2	0.29	40	40.0	NORMAL	0.023
	610	0.044	6.4	0.10	80	5.0	NORMAL	0.023
		0.685	**100.0**					
MD07	130	0.144	18.4	0.30	15	30.0	NORMAL	0.083
	140	0.341	43.6	0.25	30	15.0	NORMAL	0.083
	180	0.083	10.6	0.25	45	5.0	NORMAL	0.083
	200	0.015	1.9	0.10	80	5.0	NORMAL	0.023
	230	0.035	4.5	0.10	85	5.0	NORMAL	0.023
	240	0.124	15.9	0.10	85	5.0	NORMAL	0.023
	520	0.032	4.1	0.29	40	40.0	NORMAL	0.023
	740	0.009	1.1	0.00	0	0.0	WET	0.023
		0.783	**100.1**					
MD27	200	0.000		0.10	80	5.0	NORMAL	0.026
	320	0.222	92.2	0.15	80	0.0	NORMAL	0.026
	610	0.019	7.8	0.10	80	5.0	NORMAL	0.026

* Non default value

Sub Basin	Land Use Code	Area (sq mi)	Area (%)	Initial Loss (IA)	Percent Impervious (RTIMP)	Vegetable Cover (%)	DTHETA	Kb
Major Basin ID: MV								
		0.241	**100.0**					
MD35	150	0.405	40.5	0.25	30	15.0	NORMAL	0.080
	200	0.027	2.7	0.10	80	5.0	NORMAL	0.022
	320	0.405	40.6	0.15	80	0.0	NORMAL	0.022
	520	0.030	3.0	0.29	40	40.0	NORMAL	0.022
	550	0.006	0.6	0.10	80	10.0	NORMAL	0.022
	810	0.126	12.6	0.10	80	5.0	NORMAL	0.080
		0.999	**100.0**					
MD43	150	0.708	70.8	0.25	30	15.0	NORMAL	0.080
	190	0.072	7.2	0.25	45	5.0	NORMAL	0.080
	200	0.073	7.3	0.10	80	5.0	NORMAL	0.022
	520	0.020	2.0	0.29	40	40.0	NORMAL	0.022
	710	0.000		0.10	5	80.0	NORMAL	0.022
	810	0.127	12.7	0.10	80	5.0	NORMAL	0.080
		1.000	**100.0**					
MD51	150	0.679	67.8	0.25	30	15.0	NORMAL	0.080
	180	0.069	6.9	0.25	45	5.0	NORMAL	0.080
	190	0.083	8.2	0.25	45	5.0	NORMAL	0.080
	200	0.073	7.3	0.10	80	5.0	NORMAL	0.022
	320	0.000		0.15	80	0.0	NORMAL	0.022
	520	0.035	3.5	0.29	40	40.0	NORMAL	0.022
	710	0.063	6.2	0.10	5	80.0	NORMAL	0.022
		1.001	**99.9**					
MD59	150	0.880	87.6	0.25	30	15.0	NORMAL	0.080
	190	0.025	2.5	0.25	45	5.0	NORMAL	0.080
	200	0.045	4.4	0.10	80	5.0	NORMAL	0.022
	520	0.055	5.4	0.29	40	40.0	NORMAL	0.022
		1.005	**99.9**					
MD67	150	0.646	66.0	0.25	30	15.0	NORMAL	0.080
	190	0.049	5.0	0.25	45	5.0	NORMAL	0.080
	200	0.061	6.3	0.10	80	5.0	NORMAL	0.023
	520	0.057	5.8	0.29	40	40.0	NORMAL	0.023
	710	0.166	17.0	0.10	5	80.0	NORMAL	0.023
		0.978	**100.1**					
MD75	150	0.775	77.4	0.25	30	15.0	NORMAL	0.080
	190	0.000		0.25	45	5.0	NORMAL	0.080
	200	0.200	20.0	0.10	80	5.0	NORMAL	0.022
	520	0.026	2.6	0.29	40	40.0	NORMAL	0.022
		1.002	**100.0**					
MD83	150	0.000		0.25	30	15.0	NORMAL	0.080
	170	0.000		0.25	45	10.0	NORMAL	0.080
	190	0.104	10.5	0.25	45	5.0	NORMAL	0.080
	200	0.687	69.3	0.10	80	5.0	NORMAL	0.022
	220	0.096	9.7	0.10	75	10.0	NORMAL	0.022
	320	0.000		0.15	80	0.0	NORMAL	0.022
	550	0.104	10.5	0.10	80	10.0	NORMAL	0.022
		0.992	**100.0**					
MD91	150	0.573	56.9	0.25	30	15.0	NORMAL	0.080
	170	0.028	2.8	0.25	45	10.0	NORMAL	0.080
	180	0.109	10.8	0.25	45	5.0	NORMAL	0.080
	190	0.078	7.7	0.25	45	5.0	NORMAL	0.080
	200	0.193	19.2	0.10	80	5.0	NORMAL	0.022
	220	0.000		0.10	75	10.0	NORMAL	0.022
	230	0.000		0.10	85	5.0	NORMAL	0.022

* Non default value

Sub Basin	Land Use Code	Area (sq mi)	Area (%)	Initial Loss (IA)	Percent Impervious (RTIMP)	Vegetable Cover (%)	DTHETA	Kb
Major Basin ID: MV								
MD91	320	0.000		0.15	80	0.0	NORMAL	0.022
	550	0.005	0.5	0.10	80	10.0	NORMAL	0.022
	710	0.022	2.2	0.10	5	80.0	NORMAL	0.022
	730	0.000		0.10	0	5.0	DRY	0.080
		1.007	**100.1**					
MD99	200	0.271	84.8	0.10	80	5.0	NORMAL	0.026
	230	0.000		0.10	85	5.0	NORMAL	0.026
	610	0.048	15.2	0.10	80	5.0	NORMAL	0.026
		0.319	**100.0**					
MDAF	140	0.558	66.9	0.25	30	15.0	NORMAL	0.082
	150	0.000		0.25	30	15.0	NORMAL	0.082
	180	0.002	0.2	0.25	45	5.0	NORMAL	0.082
	220	0.079	9.5	0.10	75	10.0	NORMAL	0.023
	230	0.000		0.10	85	5.0	NORMAL	0.023
	240	0.003	0.4	0.10	85	5.0	NORMAL	0.023
	320	0.067	8.0	0.15	80	0.0	NORMAL	0.023
	520	0.032	3.8	0.29	40	40.0	NORMAL	0.023
	555	0.017	2.1	0.10	5	0.0	DRY	0.023
	710	0.000		0.10	5	80.0	NORMAL	0.023
	730	0.076	9.1	0.10	0	5.0	DRY	0.082
		0.834	**100.0**					
MDAV	130	0.000		0.30	15	30.0	NORMAL	0.080
	140	0.719	75.4	0.25	30	15.0	NORMAL	0.080
	150	0.043	4.5	0.25	30	15.0	NORMAL	0.080
	230	0.035	3.7	0.10	85	5.0	NORMAL	0.023
	240	0.001	0.1	0.10	85	5.0	NORMAL	0.023
	520	0.029	3.1	0.29	40	40.0	NORMAL	0.023
	710	0.007	0.8	0.10	5	80.0	NORMAL	0.023
	740	0.119	12.5	0.00	0	0.0	WET	0.023
		0.954	**100.1**					
MDLO	150	0.382	56.9	0.25	30	15.0	NORMAL	0.084
	180	0.027	4.0	0.25	45	5.0	NORMAL	0.084
	190	0.036	5.3	0.25	45	5.0	NORMAL	0.084
	200	0.181	26.9	0.10	80	5.0	NORMAL	0.024
	220	0.000		0.10	75	10.0	NORMAL	0.024
	230	0.000		0.10	85	5.0	NORMAL	0.024
	610	0.047	7.0	0.10	80	5.0	NORMAL	0.024
		0.672	**100.1**					
NO27	150	0.001	0.6	0.25	30	15.0	NORMAL	0.102
	190	0.029	22.6	0.25	45	5.0	NORMAL	0.102
	200	0.053	42.3	0.10	80	5.0	NORMAL	0.028
	520	0.028	21.8	0.29	40	40.0	NORMAL	0.028
	610	0.016	12.6	0.10	80	5.0	NORMAL	0.028
		0.126	**99.9**					
NO35	150	0.619	62.5	0.25	30	15.0	NORMAL	0.080
	180	0.111	11.2	0.25	45	5.0	NORMAL	0.080
	190	0.113	11.4	0.25	45	5.0	NORMAL	0.080
	200	0.070	7.1	0.10	80	5.0	NORMAL	0.022
	520	0.071	7.2	0.29	40	40.0	NORMAL	0.022
	550	0.001	0.1	0.10	80	10.0	NORMAL	0.022
	610	0.005	0.5	0.10	80	5.0	NORMAL	0.022
	710	0.000		0.10	5	80.0	NORMAL	0.022
		0.991	**100.0**					
NO43	150	0.893	89.7	0.25	30	15.0	NORMAL	0.080
	180	0.014	1.4	0.25	45	5.0	NORMAL	0.080

* Non default value

Sub Basin	Land Use Code	Area (sq mi)	Area (%)	Initial Loss (IA)	Percent Impervious (RTIMP)	Vegetable Cover (%)	DTHETA	Kb
Major Basin ID: MV								
NO43	190	0.000		0.25	45	5.0	NORMAL	0.080
	200	0.049	5.0	0.10	80	5.0	NORMAL	0.022
	520	0.024	2.4	0.29	40	40.0	NORMAL	0.022
	710	0.015	1.5	0.10	5	80.0	NORMAL	0.022
		0.995	**100.0**					
NO51	130	0.000		0.30	15	30.0	NORMAL	0.080
	140	0.634	63.8	0.25	30	15.0	NORMAL	0.080
	150	0.006	0.6	0.25	30	15.0	NORMAL	0.080
	170	0.023	2.3	0.25	45	10.0	NORMAL	0.080
	180	0.059	6.0	0.25	45	5.0	NORMAL	0.080
	190	0.062	6.2	0.25	45	5.0	NORMAL	0.080
	200	0.063	6.3	0.10	80	5.0	NORMAL	0.022
	400	0.016	1.7	0.10	80	5.0	NORMAL	0.080
	520	0.110	11.0	0.29	40	40.0	NORMAL	0.022
	710	0.021	2.1	0.10	5	80.0	NORMAL	0.022
		0.993	**100.0**					
NO59	130	0.031	3.1	0.30	15	30.0	NORMAL	0.080
	140	0.369	37.2	0.25	30	15.0	NORMAL	0.080
	150	0.318	32.1	0.25	30	15.0	NORMAL	0.080
	170	0.000		0.25	45	10.0	NORMAL	0.080
	180	0.038	3.8	0.25	45	5.0	NORMAL	0.080
	190	0.031	3.1	0.25	45	5.0	NORMAL	0.080
	200	0.072	7.3	0.10	80	5.0	NORMAL	0.022
	400	0.020	2.0	0.10	80	5.0	NORMAL	0.080
	520	0.031	3.1	0.29	40	40.0	NORMAL	0.022
	710	0.081	8.1	0.10	5	80.0	NORMAL	0.022
		0.992	**99.8**					
NO67	130	0.000		0.30	15	30.0	NORMAL	0.080
	140	0.000		0.25	30	15.0	NORMAL	0.080
	150	0.062	6.5	0.25	30	15.0	NORMAL	0.080
	170	0.353	36.9	0.25	45	10.0	NORMAL	0.080
	180	0.130	13.6	0.25	45	5.0	NORMAL	0.080
	190	0.233	24.4	0.25	45	5.0	NORMAL	0.080
	200	0.019	2.0	0.10	80	5.0	NORMAL	0.023
	320	0.054	5.6	0.15	80	0.0	NORMAL	0.023
	400	0.030	3.1	0.10	80	5.0	NORMAL	0.080
	500	0.000		0.29	45	30.0	NORMAL	0.023
	710	0.075	7.9	0.10	5	80.0	NORMAL	0.023
		0.956	**100.0**					
NO75	200	0.000		0.10	80	5.0	NORMAL	0.024
	320	0.041	8.0	0.15	80	0.0	NORMAL	0.024
	550	0.205	40.5	0.10	80	10.0	NORMAL	0.024
	610	0.003	0.6	0.10	80	5.0	NORMAL	0.024
	810	0.258	50.9	0.10	80	5.0	NORMAL	0.087
		0.506	**100.0**					
NO83	140	0.001	0.1	0.25	30	15.0	NORMAL	0.080
	200	0.000		0.10	80	5.0	NORMAL	0.022
	220	0.000		0.10	75	10.0	NORMAL	0.022
	550	0.113	11.3	0.10	80	10.0	NORMAL	0.022
	610	0.000		0.10	80	5.0	NORMAL	0.022
	710	0.000		0.10	5	80.0	NORMAL	0.022
	810	0.890	88.6	0.10	80	5.0	NORMAL	0.080
		1.005	**100.0**					
NO91	140	0.898	90.4	0.25	30	15.0	NORMAL	0.080
	220	0.000		0.10	75	10.0	NORMAL	0.022
	240	0.000		0.10	85	5.0	NORMAL	0.022

Sub Basin	Land Use Code	Area (sq mi)	Area (%)	Initial Loss (IA)	Percent Impervious (RTIMP)	Vegetable Cover (%)	DTHETA	Kb
Major Basin ID: MV								
NO91	520	0.031	3.1	0.29	40	40.0	NORMAL	0.022
	550	0.064	6.4	0.10	80	10.0	NORMAL	0.022
	810	0.000		0.10	80	5.0	NORMAL	0.080
		0.994	**99.9**					
NOLO	140	0.000	0.1	0.25	30	15.0	NORMAL	0.094
	240	0.222	79.1	0.10	85	5.0	NORMAL	0.026
	550	0.000		0.10	80	10.0	NORMAL	0.026
	610	0.058	20.8	0.10	80	5.0	NORMAL	0.026
		0.280	**100.0**					
OL35	150	0.000		0.25	30	15.0	NORMAL	0.097
	180	0.000	0.2	0.25	45	5.0	NORMAL	0.097
	190	0.000	0.1	0.25	45	5.0	NORMAL	0.097
	200	0.040	18.7	0.10	80	5.0	NORMAL	0.027
	250	0.004	1.8	0.10	85	0.0	NORMAL	0.027
	550	0.101	47.2	0.10	80	10.0	NORMAL	0.027
	610	0.006	2.9	0.10	80	5.0	NORMAL	0.027
	710	0.062	29.0	0.10	5	80.0	NORMAL	0.027
		0.215	**99.9**					
OL43	150	0.553	87.1	0.25	30	15.0	NORMAL	0.085
	180	0.020	3.1	0.25	45	5.0	NORMAL	0.085
	190	0.013	2.1	0.25	45	5.0	NORMAL	0.085
	200	0.027	4.2	0.10	80	5.0	NORMAL	0.024
	520	0.022	3.5	0.29	40	40.0	NORMAL	0.024
		0.635	**100.0**					
OL51	120	0.000		0.30	5	50.0	NORMAL	0.080
	140	0.000		0.25	30	15.0	NORMAL	0.080
	150	0.693	69.8	0.25	30	15.0	NORMAL	0.080
	170	0.080	8.0	0.25	45	10.0	NORMAL	0.080
	180	0.021	2.1	0.25	45	5.0	NORMAL	0.080
	190	0.035	3.5	0.25	45	5.0	NORMAL	0.080
	200	0.094	9.5	0.10	80	5.0	NORMAL	0.022
	520	0.021	2.1	0.29	40	40.0	NORMAL	0.022
	550	0.002	0.2	0.10	80	10.0	NORMAL	0.022
	710	0.048	4.8	0.10	5	80.0	NORMAL	0.022
		0.993	**100.0**					
OL59	120	0.031	3.1	0.30	5	50.0	NORMAL	0.080
	140	0.669	67.6	0.25	30	15.0	NORMAL	0.080
	150	0.093	9.4	0.25	30	15.0	NORMAL	0.080
	170	0.051	5.1	0.25	45	10.0	NORMAL	0.080
	180	0.008	0.8	0.25	45	5.0	NORMAL	0.080
	190	0.022	2.2	0.25	45	5.0	NORMAL	0.080
	200	0.063	6.4	0.10	80	5.0	NORMAL	0.022
	400	0.011	1.1	0.10	80	5.0	NORMAL	0.080
	520	0.026	2.6	0.29	40	40.0	NORMAL	0.022
	710	0.017	1.7	0.10	5	80.0	NORMAL	0.022
		0.990	**100.0**					
OL67	140	0.001	0.1	0.25	30	15.0	NORMAL	0.080
	150	0.425	44.3	0.25	30	15.0	NORMAL	0.080
	170	0.065	6.7	0.25	45	10.0	NORMAL	0.080
	190	0.008	0.8	0.25	45	5.0	NORMAL	0.080
	200	0.033	3.4	0.10	80	5.0	NORMAL	0.023
	400	0.015	1.5	0.10	80	5.0	NORMAL	0.080
	500	0.243	25.3	0.29	45	30.0	NORMAL	0.023
	520	0.011	1.2	0.29	40	40.0	NORMAL	0.023
	550	0.038	3.9	0.10	80	10.0	NORMAL	0.023
	710	0.123	12.8	0.10	5	80.0	NORMAL	0.023

Major Basin ID: MV

Sub Basin	Land Use Code	Area (sq mi)	Area (%)	Initial Loss (IA)	Percent Impervious (RTIMP)	Vegetable Cover (%)	DTHETA	Kb
		0.960	**100.0**					
OL75	140	0.749	74.6	0.25	30	15.0	NORMAL	0.080
	150	0.071	7.1	0.25	30	15.0	NORMAL	0.080
	170	0.002	0.2	0.25	45	10.0	NORMAL	0.080
	190	0.025	2.5	0.25	45	5.0	NORMAL	0.080
	200	0.065	6.5	0.10	80	5.0	NORMAL	0.022
	520	0.022	2.2	0.29	40	40.0	NORMAL	0.022
	710	0.069	6.9	0.10	5	80.0	NORMAL	0.022
	810	0.000		0.10	80	5.0	NORMAL	0.080
		1.004	**100.0**					
OL83	140	0.085	15.8	0.25	30	15.0	NORMAL	0.087
	150	0.071	13.3	0.25	30	15.0	NORMAL	0.087
	180	0.153	28.5	0.25	45	5.0	NORMAL	0.087
	200	0.050	9.3	0.10	80	5.0	NORMAL	0.024
	220	0.070	13.1	0.10	75	10.0	NORMAL	0.024
	550	0.000		0.10	80	10.0	NORMAL	0.024
	710	0.012	2.3	0.10	5	80.0	NORMAL	0.024
	810	0.096	17.9	0.10	80	5.0	NORMAL	0.087
		0.537	**100.2**					
OL91	140	0.593	58.4	0.25	30	15.0	NORMAL	0.080
	150	0.106	10.4	0.25	30	15.0	NORMAL	0.080
	180	0.000		0.25	45	5.0	NORMAL	0.080
	190	0.029	2.8	0.25	45	5.0	NORMAL	0.080
	200	0.007	0.7	0.10	80	5.0	NORMAL	0.022
	220	0.171	16.8	0.10	75	10.0	NORMAL	0.022
	240	0.000		0.10	85	5.0	NORMAL	0.022
	520	0.022	2.2	0.29	40	40.0	NORMAL	0.022
	550	0.084	8.3	0.10	80	10.0	NORMAL	0.022
	710	0.003	0.3	0.10	5	80.0	NORMAL	0.022
		1.016	**99.9**					
OLLO	140	0.001	0.4	0.25	30	15.0	NORMAL	0.100
	190	0.000	0.1	0.25	45	5.0	NORMAL	0.100
	220	0.000	0.1	0.10	75	10.0	NORMAL	0.027
	240	0.114	71.5	0.10	85	5.0	NORMAL	0.027
	610	0.045	28.0	0.10	80	5.0	NORMAL	0.027
		0.160	**100.1**					
OW67	320	0.119	99.9	0.15	80	0.0	NORMAL	0.028
	550	0.000	0.1	0.10	80	10.0	NORMAL	0.028
		0.119	**100.0**					
OW75	140	0.000	0.1	0.25	30	15.0	NORMAL	0.087
	150	0.107	21.5	0.25	30	15.0	NORMAL	0.087
	170	0.000	0.1	0.25	45	10.0	NORMAL	0.087
	320	0.326	65.4	0.15	80	0.0	NORMAL	0.024
	550	0.003	0.6	0.10	80	10.0	NORMAL	0.024
	710	0.060	12.0	0.10	5	80.0	NORMAL	0.024
	810	0.001	0.3	0.10	80	5.0	NORMAL	0.087
		0.498	**100.0**					
OW83	130	0.315	63.4	0.30	15	30.0	NORMAL	0.087
	140	0.053	10.8	0.25	30	15.0	NORMAL	0.087
	320	0.051	10.2	0.15	80	0.0	NORMAL	0.024
	400	0.010	1.9	0.10	80	5.0	NORMAL	0.087
	520	0.000		0.29	40	40.0	NORMAL	0.024
	550	0.000		0.10	80	10.0	NORMAL	0.024
	710	0.000		0.10	5	80.0	NORMAL	0.024
	810	0.067	13.6	0.10	80	5.0	NORMAL	0.087

* Non default value

Major Basin ID: MV

Sub Basin	Land Use Code	Area (sq mi)	Area (%)	Initial Loss (IA)	Percent Impervious (RTIMP)	Vegetable Cover (%)	DTHETA	Kb
		0.496	**99.9**					
PE51	130	0.050	11.9	0.30	15	30.0	NORMAL	0.089
	150	0.271	64.6	0.25	30	15.0	NORMAL	0.089
	170	0.000		0.25	45	10.0	NORMAL	0.089
	190	0.010	2.4	0.25	45	5.0	NORMAL	0.089
	200	0.027	6.5	0.10	80	5.0	NORMAL	0.025
	400	0.020	4.7	0.10	80	5.0	NORMAL	0.089
	550	0.030	7.3	0.10	80	10.0	NORMAL	0.025
	710	0.011	2.7	0.10	5	80.0	NORMAL	0.025
		0.419	**100.1**					
PE59	130	0.152	15.4	0.30	15	30.0	NORMAL	0.080
	140	0.052	5.2	0.25	30	15.0	NORMAL	0.080
	150	0.635	64.2	0.25	30	15.0	NORMAL	0.080
	170	0.035	3.5	0.25	45	10.0	NORMAL	0.080
	190	0.016	1.6	0.25	45	5.0	NORMAL	0.080
	200	0.064	6.4	0.10	80	5.0	NORMAL	0.022
	520	0.021	2.1	0.29	40	40.0	NORMAL	0.022
	710	0.016	1.6	0.10	5	80.0	NORMAL	0.022
		0.990	**100.0**					
PE67	130	0.063	6.5	0.30	15	30.0	NORMAL	0.080
	140	0.000		0.25	30	15.0	NORMAL	0.080
	150	0.605	62.9	0.25	30	15.0	NORMAL	0.080
	170	0.060	6.2	0.25	45	10.0	NORMAL	0.080
	180	0.011	1.2	0.25	45	5.0	NORMAL	0.080
	190	0.039	4.0	0.25	45	5.0	NORMAL	0.080
	200	0.062	6.4	0.10	80	5.0	NORMAL	0.023
	400	0.004	0.4	0.10	80	5.0	NORMAL	0.080
	520	0.036	3.8	0.29	40	40.0	NORMAL	0.023
	530	0.001	0.1	0.10	80	5.0	NORMAL	0.080
	550	0.056	5.8	0.10	80	10.0	NORMAL	0.023
	710	0.026	2.7	0.10	5	80.0	NORMAL	0.023
		0.962	**100.0**					
PE75	140	0.900	89.3	0.25	30	15.0	NORMAL	0.080
	150	0.003	0.3	0.25	30	15.0	NORMAL	0.080
	170	0.000		0.25	45	10.0	NORMAL	0.080
	180	0.000		0.25	45	5.0	NORMAL	0.080
	190	0.000		0.25	45	5.0	NORMAL	0.080
	200	0.064	6.3	0.10	80	5.0	NORMAL	0.022
	520	0.025	2.5	0.29	40	40.0	NORMAL	0.022
	710	0.015	1.5	0.10	5	80.0	NORMAL	0.022
		1.007	**99.9**					
PE83	140	0.478	47.8	0.25	30	15.0	NORMAL	0.080
	150	0.362	36.2	0.25	30	15.0	NORMAL	0.080
	190	0.037	3.7	0.25	45	5.0	NORMAL	0.080
	200	0.013	1.3	0.10	80	5.0	NORMAL	0.022
	220	0.066	6.6	0.10	75	10.0	NORMAL	0.022
	520	0.024	2.4	0.29	40	40.0	NORMAL	0.022
	530	0.013	1.3	0.10	80	5.0	NORMAL	0.080
	550	0.007	0.7	0.10	80	10.0	NORMAL	0.022
		1.000	**100.0**					
PE91	140	0.119	23.4	0.25	30	15.0	NORMAL	0.087
	150	0.126	24.8	0.25	30	15.0	NORMAL	0.087
	190	0.079	15.5	0.25	45	5.0	NORMAL	0.087
	220	0.060	11.8	0.10	75	10.0	NORMAL	0.024
	240	0.087	17.1	0.10	85	5.0	NORMAL	0.024
	320	0.000		0.15	80	0.0	NORMAL	0.024

* Non default value

Sub Basin	Land Use Code	Area (sq mi)	Area (%)	Initial Loss (IA)	Percent Impervious (RTIMP)	Vegetable Cover (%)	DTHETA	Kb
Major Basin ID: MV								
PE91	520	0.006	1.1	0.29	40	40.0	NORMAL	0.024
	550	0.004	0.8	0.10	80	10.0	NORMAL	0.024
	810	0.028	5.5	0.10	80	5.0	NORMAL	0.087
		0.509	**100.0**					
PELO	140	0.109	40.2	0.25	30	15.0	NORMAL	0.094
	150	0.048	17.7	0.25	30	15.0	NORMAL	0.094
	220	0.000		0.10	75	10.0	NORMAL	0.026
	240	0.026	9.5	0.10	85	5.0	NORMAL	0.026
	320	0.003	1.3	0.15	80	0.0	NORMAL	0.026
	610	0.049	17.9	0.10	80	5.0	NORMAL	0.026
	810	0.037	13.5	0.10	80	5.0	NORMAL	0.094
		0.271	**100.1**					
RI07	140	0.334	44.1	0.25	30	15.0	NORMAL	0.083
	150	0.000		0.25	30	15.0	NORMAL	0.083
	190	0.001	0.1	0.25	45	5.0	NORMAL	0.083
	200	0.098	12.9	0.10	80	5.0	NORMAL	0.023
	230	0.032	4.3	0.10	85	5.0	NORMAL	0.023
	240	0.058	7.7	0.10	85	5.0	NORMAL	0.023
	710	0.000	0.1	0.10	5	80.0	NORMAL	0.023
	740	0.002	0.3	0.00	0	0.0	WET	0.023
	810	0.232	30.6	0.10	80	5.0	NORMAL	0.083
		0.759	**100.1**					
RIAF	140	0.378	57.4	0.25	30	15.0	NORMAL	0.084
	150	0.004	0.5	0.25	30	15.0	NORMAL	0.084
	200	0.001	0.1	0.10	80	5.0	NORMAL	0.024
	230	0.020	3.0	0.10	85	5.0	NORMAL	0.024
	320	0.123	18.6	0.15	80	0.0	NORMAL	0.024
	520	0.102	15.4	0.29	40	40.0	NORMAL	0.024
	710	0.000		0.10	5	80.0	NORMAL	0.024
	740	0.033	4.9	0.00	0	0.0	WET	0.024
		0.660	**99.9**					
TB67	120	0.033	12.5	0.30	5	50.0	NORMAL	0.094
	130	0.044	16.8	0.30	15	30.0	NORMAL	0.094
	140	0.096	36.4	0.25	30	15.0	NORMAL	0.094
	200	0.022	8.1	0.10	80	5.0	NORMAL	0.026
	550	0.009	3.6	0.10	80	10.0	NORMAL	0.026
	710	0.060	22.6	0.10	5	80.0	NORMAL	0.026
		0.264	**100.0**					
TB75	140	0.118	11.5	0.25	30	15.0	NORMAL	0.080
	150	0.811	79.1	0.25	30	15.0	NORMAL	0.080
	200	0.037	3.6	0.10	80	5.0	NORMAL	0.022
	550	0.035	3.4	0.10	80	10.0	NORMAL	0.022
	710	0.000		0.10	5	80.0	NORMAL	0.022
	740	0.024	2.3	0.00	0	0.0	WET	0.022
		1.026	**99.9**					
TB83	120	0.000		0.30	5	50.0	NORMAL	0.080
	140	0.551	55.3	0.25	30	15.0	NORMAL	0.080
	150	0.345	34.6	0.25	30	15.0	NORMAL	0.080
	180	0.000		0.25	45	5.0	NORMAL	0.080
	200	0.020	2.0	0.10	80	5.0	NORMAL	0.022
	240	0.000		0.10	85	5.0	NORMAL	0.022
	520	0.062	6.3	0.29	40	40.0	NORMAL	0.022
	710	0.017	1.7	0.10	5	80.0	NORMAL	0.022
	740	0.000		0.00	0	0.0	WET	0.022
	810	0.000		0.10	80	5.0	NORMAL	0.080

* Non default value

Sub Basin	Land Use Code	Area (sq mi)	Area (%)	Initial Loss (IA)	Percent Impervious (RTIMP)	Vegetable Cover (%)	DTHETA	Kb
Major Basin ID: MV								
		0.995	**99.9**					
TBLO	140	0.000	0.1	0.25	30	15.0	NORMAL	0.105
	150	0.000	0.1	0.25	30	15.0	NORMAL	0.105
	180	0.030	29.0	0.25	45	5.0	NORMAL	0.105
	240	0.049	48.1	0.10	85	5.0	NORMAL	0.029
	610	0.023	22.3	0.10	80	5.0	NORMAL	0.029
	810	0.000	0.3	0.10	80	5.0	NORMAL	0.105
		0.102	**99.9**					
TM07	130	0.257	97.1	0.30	15	30.0	NORMAL	0.094
	140	0.000		0.25	30	15.0	NORMAL	0.094
	740	0.008	2.9	0.00	0	0.0	WET	0.026
		0.265	**100.0**					
TM35	190	0.000		0.25	45	5.0	NORMAL	0.090
	320	0.340	86.4	0.15	80	0.0	NORMAL	0.025
	810	0.053	13.6	0.10	80	5.0	NORMAL	0.090
		0.393	**100.0**					
TM43	150	0.507	79.7	0.25	30	15.0	NORMAL	0.085
	180	0.012	1.9	0.25	45	5.0	NORMAL	0.085
	190	0.019	3.0	0.25	45	5.0	NORMAL	0.085
	200	0.016	2.4	0.10	80	5.0	NORMAL	0.024
	320	0.019	3.0	0.15	80	0.0	NORMAL	0.024
	520	0.017	2.6	0.29	40	40.0	NORMAL	0.024
	810	0.047	7.4	0.10	80	5.0	NORMAL	0.085
		0.636	**100.0**					
TM51	150	0.488	89.6	0.25	30	15.0	NORMAL	0.086
	200	0.022	4.1	0.10	80	5.0	NORMAL	0.024
	520	0.020	3.7	0.29	40	40.0	NORMAL	0.024
	550	0.007	1.3	0.10	80	10.0	NORMAL	0.024
	710	0.007	1.3	0.10	5	80.0	NORMAL	0.024
		0.545	**100.0**					
TM59	150	0.407	67.8	0.25	30	15.0	NORMAL	0.085
	200	0.019	3.2	0.10	80	5.0	NORMAL	0.024
	520	0.115	19.1	0.29	40	40.0	NORMAL	0.024
	550	0.000		0.10	80	10.0	NORMAL	0.024
	710	0.059	9.8	0.10	5	80.0	NORMAL	0.024
		0.600	**99.9**					
TM67	150	0.670	82.4	0.25	30	15.0	NORMAL	0.082
	180	0.033	4.1	0.25	45	5.0	NORMAL	0.082
	190	0.000		0.25	45	5.0	NORMAL	0.082
	200	0.079	9.7	0.10	80	5.0	NORMAL	0.023
	520	0.031	3.8	0.29	40	40.0	NORMAL	0.023
		0.813	**100.0**					
TM75	150	0.385	38.6	0.25	30	15.0	NORMAL	0.080
	180	0.102	10.2	0.25	45	5.0	NORMAL	0.080
	190	0.178	17.9	0.25	45	5.0	NORMAL	0.080
	200	0.145	14.5	0.10	80	5.0	NORMAL	0.022
	520	0.128	12.9	0.29	40	40.0	NORMAL	0.022
	710	0.059	5.9	0.10	5	80.0	NORMAL	0.022
		0.997	**100.0**					
TM83	150	0.851	85.8	0.25	30	15.0	NORMAL	0.080
	180	0.000		0.25	45	5.0	NORMAL	0.080
	200	0.082	8.3	0.10	80	5.0	NORMAL	0.022
	520	0.046	4.7	0.29	40	40.0	NORMAL	0.022

* Non default value

Sub Basin	Land Use Code	Area (sq mi)	Area (%)	Initial Loss (IA)	Percent Impervious (RTIMP)	Vegetable Cover (%)	DTHETA	Kb
Major Basin ID: MV								
TM83	710	0.012	1.2	0.10	5	80.0	NORMAL	0.022
		0.992	**100.0**					
TM91	120	0.000		0.30	5	50.0	NORMAL	0.080
	150	0.787	78.5	0.25	30	15.0	NORMAL	0.080
	170	0.081	8.1	0.25	45	10.0	NORMAL	0.080
	180	0.021	2.1	0.25	45	5.0	NORMAL	0.080
	200	0.083	8.3	0.10	80	5.0	NORMAL	0.022
	520	0.031	3.1	0.29	40	40.0	NORMAL	0.022
		1.003	**100.1**					
TM99	200	0.458	90.6	0.10	80	5.0	NORMAL	0.024
	610	0.047	9.4	0.10	80	5.0	NORMAL	0.024
		0.505	**100.0**					
TMAF	130	0.001	0.1	0.30	15	30.0	NORMAL	0.083
	140	0.569	74.6	0.25	30	15.0	NORMAL	0.083
	150	0.000		0.25	30	15.0	NORMAL	0.083
	320	0.147	19.2	0.15	80	0.0	NORMAL	0.023
	730	0.000		0.10	0	5.0	DRY	0.083
	740	0.046	6.0	0.00	0	0.0	WET	0.023
		0.762	**99.9**					
TMLO	120	0.032	6.5	0.30	5	50.0	NORMAL	0.087
	150	0.000		0.25	30	15.0	NORMAL	0.087
	170	0.000		0.25	45	10.0	NORMAL	0.087
	200	0.421	85.0	0.10	80	5.0	NORMAL	0.024
	610	0.042	8.5	0.10	80	5.0	NORMAL	0.024
		0.496	**100.0**					
TMRI	200	0.004	1.5	0.10	80	5.0	NORMAL	0.026
	220	0.118	49.1	0.10	75	10.0	NORMAL	0.026
	710	0.115	48.1	0.10	5	80.0	NORMAL	0.026
	740	0.003	1.3	0.00	0	0.0	WET	0.026
		0.240	**100.0**					

Soils

Major Basin ID: MV

Area ID	Book Number	Map Unit	Soil ID	Area (sq mi)	Area (%)	XKSAT	Rock Percent (%)	Effective Rock (%)
BH27	651	Es	6512857	0.033	12.70	0.25	-	100
	651	Mp	6514451	0.201	77.90	0.25	-	100
	651	GgA	651323320	0.024	9.40	0.25	-	100
BH35	651	Aa	6512021	0.048	4.80	0.26	-	100
	651	Ao	6512049	0.087	8.60	0.04	-	100
	651	Es	6512857	0.170	16.90	0.25	-	100
	651	Mp	6514451	0.083	8.30	0.25	-	100
	651	Mr	6514455	0.012	1.10	0.05	-	100
	651	Tt	6515859	0.006	0.60	0.04	-	100
	651	GgA	651323320	0.599	59.60	0.25	-	100
BH43	651	Ao	6512049	0.105	10.60	0.04	-	100
	651	Bt	6512259	0.004	0.40	0.25	-	100
	651	GgA	651323320	0.885	89.00	0.25	-	100
BH51	651	Aa	6512021	0.018	1.80	0.26	-	100
	651	Ao	6512049	0.307	30.90	0.04	-	100
	651	Bt	6512259	0.002	0.20	0.25	-	100
	651	GgA	651323320	0.669	67.20	0.25	-	100
BH59	651	Aa	6512021	0.018	3.70	0.26	-	100
	651	An	6512047	0.002	0.30	0.05	-	100
	651	Ao	6512049	0.032	6.40	0.04	-	100
	651	Cb	6512423	0.012	2.40	0.40	-	100
	651	Vg	6516233	0.001	0.10	0.91	-	100
	651	Vk	6516241	0.026	5.30	0.26	-	100
	651	GgA	651323320	0.403	81.80	0.25	-	100
BH67	651	Aa	6512021	0.004	0.50	0.26	-	100
	651	Ao	6512049	0.072	7.40	0.04	-	100
	651	Es	6512857	0.009	0.90	0.25	-	100
	651	Gt	6513259	0.067	6.90	0.04	-	100
	651	Mr	6514455	0.030	3.10	0.05	-	100
	651	Tt	6515859	0.015	1.60	0.04	-	100
	651	Vh	6516235	0.000	0.00	0.27	-	100
	651	GgA	651323320	0.773	79.60	0.25	-	100
BH75	651	Ao	6512049	0.035	3.50	0.04	-	100
	651	Gt	6513259	0.444	44.30	0.04	-	100
	651	Le	6514229	0.064	6.30	0.04	-	100
	651	Mr	6514455	0.174	17.40	0.05	-	100
	651	Ms	6514457	0.016	1.60	0.01	-	100
	651	Tt	6515859	0.244	24.30	0.04	-	100
	651	GgA	651323320	0.023	2.30	0.25	-	100
	651	LcA	651422520	0.004	0.40	0.25	-	100
BH83	651	Gt	6513259	0.196	19.60	0.04	-	100
	651	Le	6514229	0.409	41.00	0.04	-	100
	651	Mr	6514455	0.012	1.20	0.05	-	100
	651	Ms	6514457	0.003	0.30	0.01	-	100
	651	Tt	6515859	0.038	3.80	0.04	-	100
	651	GgA	651323320	0.005	0.50	0.25	-	100
	651	LcA	651422520	0.333	33.40	0.25	-	100
	651	RbA	651542320	0.002	0.20	0.26	-	100
BH91	651	Le	6514229	0.120	11.60	0.04	-	100
	651	Mr	6514455	0.529	51.30	0.05	-	100
	651	Tg	6515833	0.007	0.70	0.04	-	100
	651	Tt	6515859	0.045	4.40	0.04	-	100
	651	Tw	6515865	0.041	4.00	0.05	-	100
	651	LcA	651422520	0.266	25.80	0.25	-	100
	651	RbA	651542320	0.024	2.30	0.26	-	100
BH99	651	Cb	6512423	0.000	0.10	0.40	-	100
	651	Gt	6513259	0.003	1.40	0.04	-	100
	651	Lb	6514223	0.039	21.40	0.40	-	100
	651	Mr	6514455	0.094	51.30	0.05	-	100
	651	GgA	651323320	0.048	25.90	0.25	-	100
BHLO	651	Cp	6512451	0.053	6.80	0.40	-	100
	651	Gt	6513259	0.056	7.10	0.04	-	100

Major Basin ID: MV

Area ID	Book Number	Map Unit	Soil ID	Area (sq mi)	Area (%)	XKSAT	Rock Percent (%)	Effective Rock (%)
BHLO	651	Lb	6514223	0.058	7.40	0.40	-	100
	651	Le	6514229	0.030	3.90	0.04	-	100
	651	Mr	6514455	0.393	49.90	0.05	-	100
	651	Tw	6515865	0.042	5.40	0.05	-	100
	651	GgA	651323320	0.031	3.90	0.25	-	100
	651	LcA	651422520	0.123	15.70	0.25	-	100
BHNR	651	Br	6512255	0.005	2.10	1.05	-	100
	651	Bs	6512257	0.031	11.80	0.39	-	100
	651	Gt	6513259	0.106	41.30	0.04	-	100
	651	TD	6515826	0.012	4.70	1.20	-	100
	651	GgA	651323320	0.076	29.60	0.25	-	100
	651	RaB	651542122	0.027	10.60	0.39	-	100
BHRI	651	Aa	6512021	0.013	2.50	0.26	-	100
	651	Ao	6512049	0.045	8.80	0.04	-	100
	651	Br	6512255	0.011	2.10	1.05	-	100
	651	Bs	6512257	0.017	3.30	0.39	-	100
	651	Cb	6512423	0.045	8.70	0.40	-	100
	651	Gt	6513259	0.093	18.10	0.04	-	100
	651	Lb	6514223	0.011	2.10	0.40	-	100
	651	Mr	6514455	0.080	15.60	0.05	-	100
	651	Va	6516221	0.004	0.80	0.39	-	100
	651	AbA	651202320	0.000	0.10	0.38	-	100
	651	AbB	651202322	0.031	6.10	0.39	-	100
	651	GgA	651323320	0.082	16.10	0.25	-	100
	651	LcA	651422520	0.054	10.40	0.25	-	100
	651	RaB	651542122	0.006	1.20	0.39	-	100
	651	RbA	651542320	0.023	4.40	0.26	-	100
CB07	651	Bs	6512257	0.028	8.90	0.39	-	100
	651	Gt	6513259	0.126	39.80	0.04	-	100
	651	AbA	651202320	0.033	10.20	0.38	-	100
	651	GgA	651323320	0.048	15.10	0.25	-	100
	651	GxA	651326720	0.001	0.40	0.23	-	100
	651	RaB	651542122	0.081	25.50	0.39	-	100
CB27	651	Le	6514229	0.020	7.80	0.04	-	100
	651	GgA	651323320	0.241	92.20	0.25	-	100
CB35	651	Aa	6512021	0.251	25.10	0.26	-	100
	651	Ao	6512049	0.042	4.20	0.04	-	100
	651	Le	6514229	0.002	0.20	0.04	-	100
	651	GgA	651323320	0.704	70.40	0.25	-	100
CB43	651	Aa	6512021	0.322	32.20	0.26	-	100
	651	Bt	6512259	0.000	0.00	0.25	-	100
	651	GgA	651323320	0.677	67.80	0.25	-	100
CB51	651	Aa	6512021	0.062	12.80	0.26	-	100
	651	Ao	6512049	0.022	4.60	0.04	-	100
	651	GgA	651323320	0.399	82.60	0.25	-	100
CB59	651	Aa	6512021	0.005	0.50	0.26	-	100
	651	An	6512047	0.033	3.30	0.05	-	100
	651	Ao	6512049	0.054	5.30	0.04	-	100
	651	Gt	6513259	0.010	1.00	0.04	-	100
	651	Vg	6516233	0.017	1.70	0.91	-	100
	651	GgA	651323320	0.892	88.20	0.25	-	100
CB67	651	Aa	6512021	0.028	2.90	0.26	-	100
	651	An	6512047	0.070	7.20	0.05	-	100
	651	Ao	6512049	0.573	59.10	0.04	-	100
	651	Bt	6512259	0.012	1.20	0.25	-	100
	651	Gt	6513259	0.000	0.00	0.04	-	100
	651	Ma	6514421	0.015	1.60	0.40	-	100
	651	Vh	6516235	0.053	5.50	0.27	-	100
	651	GgA	651323320	0.220	22.60	0.25	-	100
CB75	651	Aa	6512021	0.029	2.90	0.26	-	100
	651	An	6512047	0.026	2.60	0.05	-	100
	651	Ao	6512049	0.331	33.20	0.04	-	100

Area ID	Book Number	Map Unit	Soil ID	Area (sq mi)	Area (%)	XKSAT	Rock Percent (%)	Effective Rock (%)
Major Basin ID: MV								
CB75	651	Bs	6512257	0.019	1.90	0.39	-	100
	651	Ge	6513229	0.059	5.90	0.26	-	100
	651	Gt	6513259	0.214	21.40	0.04	-	100
	651	Ma	6514421	0.044	4.40	0.40	-	100
	651	Mr	6514455	0.000	0.00	0.05	-	100
	651	Ms	6514457	0.002	0.20	0.01	-	100
	651	Tt	6515859	0.028	2.80	0.04	-	100
	651	Vg	6516233	0.031	3.10	0.91	-	100
	651	Vh	6516235	0.078	7.90	0.27	-	100
	651	AbA	651202320	0.044	4.40	0.38	-	100
	651	GgA	651323320	0.079	7.90	0.25	-	100
	651	LcA	651422520	0.015	1.50	0.25	-	100
CB83	651	Aa	6512021	0.005	0.90	0.26	-	100
	651	An	6512047	0.042	7.50	0.05	-	100
	651	Ao	6512049	0.105	18.90	0.04	-	100
	651	Bs	6512257	0.006	1.10	0.39	-	100
	651	Es	6512857	0.046	8.20	0.25	-	100
	651	Gt	6513259	0.131	23.70	0.04	-	100
	651	Le	6514229	0.076	13.60	0.04	-	100
	651	Ma	6514421	0.008	1.50	0.40	-	100
	651	Mr	6514455	0.001	0.30	0.05	-	100
	651	Tt	6515859	0.059	10.70	0.04	-	100
	651	GgA	651323320	0.075	13.50	0.25	-	100
CB91	651	Gt	6513259	0.155	16.10	0.04	-	100
	651	Le	6514229	0.026	2.70	0.04	-	100
	651	Mr	6514455	0.346	36.00	0.05	-	100
	651	Tt	6515859	0.412	42.90	0.04	-	100
	651	Tw	6515865	0.007	0.70	0.05	-	100
	651	LcA	651422520	0.016	1.70	0.25	-	100
CB99	651	Lb	6514223	0.007	3.40	0.40	-	100
	651	Le	6514229	0.022	11.00	0.04	-	100
	651	Mr	6514455	0.103	51.30	0.05	-	100
	651	LcA	651422520	0.069	34.30	0.25	-	100
CBLO	651	Gt	6513259	0.030	3.70	0.04	-	100
	651	Lb	6514223	0.009	1.10	0.40	-	100
	651	Le	6514229	0.032	3.90	0.04	-	100
	651	Mr	6514455	0.499	61.00	0.05	-	100
	651	Tt	6515859	0.242	29.60	0.04	-	100
	651	LcA	651422520	0.005	0.60	0.25	-	100
CBNR	651	Aa	6512021	0.106	22.80	0.26	-	100
	651	An	6512047	0.014	3.00	0.05	-	100
	651	Ao	6512049	0.073	15.70	0.04	-	100
	651	Br	6512255	0.012	2.60	1.05	-	100
	651	Bs	6512257	0.005	1.00	0.39	-	100
	651	Gt	6513259	0.041	8.80	0.04	-	100
	651	TD	6515826	0.001	0.10	1.20	-	100
	651	Vh	6516235	0.005	1.20	0.27	-	100
	651	AbA	651202320	0.011	2.40	0.38	-	100
	651	GgA	651323320	0.192	41.30	0.25	-	100
	651	GxA	651326720	0.005	1.10	0.23	-	100
CBRI	651	Le	6514229	0.010	1.40	0.04	-	100
	651	Mp	6514451	0.003	0.50	0.25	-	100
	651	Mr	6514455	0.383	54.80	0.05	-	100
	651	Tt	6515859	0.031	4.50	0.04	-	100
	651	Va	6516221	0.000	0.10	0.39	-	100
	651	AbA	651202320	0.040	5.70	0.38	-	100
	651	GgA	651323320	0.009	1.30	0.25	-	100
	651	LcA	651422520	0.222	31.80	0.25	-	100
	651	RaB	651542122	0.000	0.00	0.39	-	100
CT59	651	Le	6514229	0.044	15.00	0.04	-	100
	651	Mr	6514455	0.161	54.20	0.05	-	100
	651	Tg	6515833	0.019	6.50	0.04	-	100
	651	Vf	6516231	0.029	9.90	0.01	-	100

Area ID	Book Number	Map Unit	Soil ID	Area (sq mi)	Area (%)	XKSAT	Rock Percent (%)	Effective Rock (%)
Major Basin ID: MV								
CT59	651	LcA	651422520	0.041	13.90	0.25	-	100
	651	RbA	651542320	0.001	0.50	0.26	-	100
CT67	651	Le	6514229	0.137	15.00	0.04	-	100
	651	Mp	6514451	0.027	2.90	0.25	-	100
	651	Mr	6514455	0.299	32.80	0.05	-	100
	651	Ta	6515821	0.003	0.30	0.25	-	100
	651	Te	6515829	0.008	0.90	0.25	-	100
	651	Tw	6515865	0.083	9.10	0.05	-	100
	651	Vf	6516231	0.022	2.50	0.01	-	100
	651	GxA	651326720	0.021	2.30	0.23	-	100
	651	LcA	651422520	0.258	28.40	0.25	-	100
	651	RbA	651542320	0.053	5.80	0.26	-	100
CT75	651	Gt	6513259	0.024	2.40	0.04	-	100
	651	Mp	6514451	0.013	1.30	0.25	-	100
	651	Mr	6514455	0.392	39.10	0.05	-	100
	651	Ms	6514457	0.067	6.60	0.01	-	100
	651	Tw	6515865	0.119	11.90	0.05	-	100
	651	Vf	6516231	0.203	20.20	0.01	-	100
	651	LcA	651422520	0.186	18.50	0.25	-	100
CT83	651	Le	6514229	0.047	4.60	0.04	-	100
	651	Mr	6514455	0.442	43.80	0.05	-	100
	651	Ms	6514457	0.017	1.70	0.01	-	100
	651	Tw	6515865	0.006	0.60	0.05	-	100
	651	Vf	6516231	0.212	21.10	0.01	-	100
	651	LcA	651422520	0.239	23.70	0.25	-	100
	651	PeA	651502920	0.036	3.50	0.37	-	100
	651	RbA	651542320	0.011	1.10	0.26	-	100
CTLO	651	Aa	6512021	0.031	3.60	0.26	-	100
	651	Es	6512857	0.006	0.70	0.25	-	100
	651	Le	6514229	0.193	22.30	0.04	-	100
	651	Mr	6514455	0.208	24.00	0.05	-	100
	651	Ms	6514457	0.000	0.00	0.01	-	100
	651	Tg	6515833	0.010	1.20	0.04	-	100
	651	Tw	6515865	0.008	0.90	0.05	-	100
	651	Vf	6516231	0.053	6.20	0.01	-	100
	651	AbA	651202320	0.008	0.90	0.38	-	100
	651	GgA	651323320	0.065	7.50	0.25	-	100
	651	LcA	651422520	0.283	32.70	0.25	-	100
	651	RbA	651542320	0.002	0.20	0.26	-	100
GC35	651	Ao	6512049	0.001	0.70	0.04	-	100
	651	Bs	6512257	0.015	19.00	0.39	-	100
	651	Ge	6513229	0.004	4.70	0.26	-	100
	651	Ma	6514421	0.040	52.50	0.40	-	100
	651	GgA	651323320	0.018	23.10	0.25	-	100
GC43	651	Ao	6512049	0.076	20.50	0.04	-	100
	651	Ge	6513229	0.013	3.40	0.26	-	100
	651	Gt	6513259	0.005	1.40	0.04	-	100
	651	Ma	6514421	0.017	4.70	0.40	-	100
	651	Tt	6515859	0.032	8.70	0.04	-	100
	651	GgA	651323320	0.227	61.40	0.25	-	100
GC51	651	Aa	6512021	0.008	1.90	0.26	-	100
	651	Ao	6512049	0.025	5.70	0.04	-	100
	651	GgA	651323320	0.414	92.50	0.25	-	100
GC59	651	Aa	6512021	0.010	2.40	0.26	-	100
	651	Ao	6512049	0.127	31.10	0.04	-	100
	651	GgA	651323320	0.273	66.50	0.25	-	100
GC67	651	An	6512047	0.024	2.50	0.05	-	100
	651	Ao	6512049	0.406	43.40	0.04	-	100
	651	Bt	6512259	0.007	0.80	0.25	-	100
	651	Gt	6513259	0.117	12.50	0.04	-	100
	651	GgA	651323320	0.382	40.80	0.25	-	100
GC75	651	Aa	6512021	0.013	3.10	0.26	-	100

Area ID	Book Number	Map Unit	Soil ID	Area (sq mi)	Area (%)	XKSAT	Rock Percent (%)	Effective Rock (%)
Major Basin ID: MV								
GC75	651	An	6512047	0.005	1.10	0.05	-	100
	651	Ao	6512049	0.214	52.10	0.04	-	100
	651	Bs	6512257	0.003	0.80	0.39	-	100
	651	Ge	6513229	0.028	6.90	0.26	-	100
	651	Gt	6513259	0.063	15.40	0.04	-	100
	651	Ma	6514421	0.002	0.50	0.40	-	100
	651	Vh	6516235	0.016	4.00	0.27	-	100
	651	GgA	651323320	0.067	16.20	0.25	-	100
GC83	651	Aa	6512021	0.010	2.40	0.26	-	100
	651	Ao	6512049	0.049	11.50	0.04	-	100
	651	Gt	6513259	0.214	50.40	0.04	-	100
	651	Le	6514229	0.026	6.20	0.04	-	100
	651	Mr	6514455	0.005	1.30	0.05	-	100
	651	Ms	6514457	0.001	0.20	0.01	-	100
	651	Tt	6515859	0.058	13.60	0.04	-	100
	651	GgA	651323320	0.062	14.50	0.25	-	100
GCGR	651	An	6512047	0.024	6.40	0.05	-	100
	651	Ao	6512049	0.013	3.30	0.04	-	100
	651	Bs	6512257	0.005	1.40	0.39	-	100
	651	Ma	6514421	0.036	9.60	0.40	-	100
	651	Mr	6514455	0.001	0.10	0.05	-	100
	651	Vh	6516235	0.043	11.30	0.27	-	100
	651	GgA	651323320	0.240	63.80	0.25	-	100
	651	LcA	651422520	0.015	4.00	0.25	-	100
GL27	651	Es	6512857	0.034	13.30	0.25	-	100
	651	Mp	6514451	0.094	36.50	0.25	-	100
	651	Mr	6514455	0.122	47.00	0.05	-	100
	651	Tc	6515825	0.000	0.10	0.40	-	100
	651	Tt	6515859	0.008	3.10	0.04	-	100
GL35	651	Aa	6512021	0.072	7.10	0.26	-	100
	651	An	6512047	0.022	2.20	0.05	-	100
	651	Ao	6512049	0.143	14.30	0.04	-	100
	651	Bt	6512259	0.010	1.00	0.25	-	100
	651	Es	6512857	0.075	7.50	0.25	-	100
	651	Le	6514229	0.014	1.40	0.04	-	100
	651	Mp	6514451	0.003	0.30	0.25	-	100
	651	Mr	6514455	0.075	7.50	0.05	-	100
	651	Tt	6515859	0.094	9.30	0.04	-	100
	651	GgA	651323320	0.496	49.40	0.25	-	100
GL43	651	Ao	6512049	0.540	54.10	0.04	-	100
	651	GgA	651323320	0.458	45.90	0.25	-	100
GL51	651	Aa	6512021	0.048	4.80	0.26	-	100
	651	An	6512047	0.014	1.40	0.05	-	100
	651	Ao	6512049	0.162	16.20	0.04	-	100
	651	Bs	6512257	0.000	0.00	0.39	-	100
	651	Bt	6512259	0.004	0.40	0.25	-	100
	651	Ma	6514421	0.023	2.30	0.40	-	100
	651	Vk	6516241	0.066	6.50	0.26	-	100
	651	GgA	651323320	0.684	68.30	0.25	-	100
GL59	651	Aa	6512021	0.124	12.20	0.26	-	100
	651	Ao	6512049	0.076	7.50	0.04	-	100
	651	Es	6512857	0.022	2.20	0.25	-	100
	651	Gt	6513259	0.005	0.50	0.04	-	100
	651	Tt	6515859	0.011	1.10	0.04	-	100
	651	GgA	651323320	0.778	76.60	0.25	-	100
GL67	651	Es	6512857	0.084	23.30	0.25	-	100
	651	Mr	6514455	0.028	7.70	0.05	-	100
	651	Tt	6515859	0.030	8.50	0.04	-	100
	651	GgA	651323320	0.218	60.60	0.25	-	100
GL75	651	Le	6514229	0.042	8.40	0.04	-	100
	651	Mr	6514455	0.155	31.00	0.05	-	100
	651	Tt	6515859	0.291	58.20	0.04	-	100

Area ID	Book Number	Map Unit	Soil ID	Area (sq mi)	Area (%)	XKSAT	Rock Percent (%)	Effective Rock (%)
Major Basin ID: MV								
GL75	651	Tu	6515861	0.008	1.60	0.25	-	100
	651	Tw	6515865	0.001	0.10	0.05	-	100
	651	GgA	651323320	0.002	0.50	0.25	-	100
	651	LcA	651422520	0.001	0.10	0.25	-	100
GL83	651	Le	6514229	0.011	2.30	0.04	-	100
	651	Mr	6514455	0.228	46.00	0.05	-	100
	651	Tu	6515861	0.000	0.00	0.25	-	100
	651	Tw	6515865	0.031	6.20	0.05	-	100
	651	LcA	651422520	0.212	42.90	0.25	-	100
	651	RbA	651542320	0.012	2.50	0.26	-	100
GL91	651	Aa	6512021	0.048	4.90	0.26	-	100
	651	Bs	6512257	0.042	4.30	0.39	-	100
	651	Bt	6512259	0.006	0.60	0.25	-	100
	651	Cb	6512423	0.012	1.20	0.40	-	100
	651	Ge	6513229	0.010	1.00	0.26	-	100
	651	Gt	6513259	0.112	11.40	0.04	-	100
	651	Lb	6514223	0.028	2.90	0.40	-	100
	651	Le	6514229	0.173	17.60	0.04	-	100
	651	Mr	6514455	0.176	18.00	0.05	-	100
	651	Tg	6515833	0.018	1.80	0.04	-	100
	651	Th	6515835	0.008	0.80	0.04	-	100
	651	Tw	6515865	0.023	2.30	0.05	-	100
	651	GgA	651323320	0.024	2.50	0.25	-	100
	651	GxA	651326720	0.011	1.10	0.23	-	100
	651	LcA	651422520	0.275	28.10	0.25	-	100
	651	RbA	651542320	0.011	1.10	0.26	-	100
	651	TfA	651583120	0.004	0.40	0.37	-	100
GLLO	651	Aa	6512021	0.014	1.70	0.26	-	100
	651	Bs	6512257	0.005	0.50	0.39	-	100
	651	Cb	6512423	0.006	0.70	0.40	-	100
	651	Cp	6512451	0.006	0.60	0.40	-	100
	651	Gr	6513255	0.012	1.50	0.23	-	100
	651	Gt	6513259	0.045	5.40	0.04	-	100
	651	Le	6514229	0.008	1.00	0.04	-	100
	651	Mr	6514455	0.186	21.90	0.05	-	100
	651	Tw	6515865	0.153	18.10	0.05	-	100
	651	Ve	6516229	0.004	0.50	0.25	-	100
	651	GgA	651323320	0.056	6.60	0.25	-	100
	651	LcA	651422520	0.342	40.30	0.25	-	100
	651	RbA	651542320	0.011	1.30	0.26	-	100
GLNR	651	Aa	6512021	0.049	10.10	0.26	-	100
	651	Ao	6512049	0.045	9.20	0.04	-	100
	651	Br	6512255	0.013	2.80	1.05	-	100
	651	Bs	6512257	0.037	7.70	0.39	-	100
	651	Cb	6512423	0.005	1.00	0.40	-	100
	651	Cp	6512451	0.021	4.30	0.40	-	100
	651	Gt	6513259	0.060	12.50	0.04	-	100
	651	Mr	6514455	0.086	17.90	0.05	-	100
	651	TD	6515826	0.000	0.00	1.20	-	100
	651	Tw	6515865	0.000	0.00	0.05	-	100
	651	Ve	6516229	0.000	0.00	0.25	-	100
	651	Vf	6516231	0.013	2.60	0.01	-	100
	651	GgA	651323320	0.138	28.60	0.25	-	100
	651	GPI	651325036	0.004	0.90	0.00	-	100
	651	LcA	651422520	0.001	0.20	0.25	-	100
	651	PeA	651502920	0.006	1.20	0.37	-	100
	651	RbA	651542320	0.005	1.00	0.26	-	100
GR27	651	An	6512047	0.007	1.80	0.05	-	100
	651	Ao	6512049	0.266	65.40	0.04	-	100
	651	Le	6514229	0.036	8.90	0.04	-	100
	651	GgA	651323320	0.097	23.90	0.25	-	100
GR35	651	Aa	6512021	0.086	16.20	0.26	-	100
	651	GgA	651323320	0.445	83.80	0.25	-	100

Major Basin ID: MV

Area ID	Book Number	Map Unit	Soil ID	Area (sq mi)	Area (%)	XKSAT	Rock Percent (%)	Effective Rock (%)
GR43	651	Aa	6512021	0.117	22.70	0.26	-	100
	651	Ao	6512049	0.019	3.70	0.04	-	100
	651	Bt	6512259	0.002	0.40	0.25	-	100
	651	Vk	6516241	0.015	3.00	0.26	-	100
	651	GgA	651323320	0.361	70.30	0.25	-	100
GR59	651	Aa	6512021	0.012	2.20	0.26	-	100
	651	Vk	6516241	0.002	0.40	0.26	-	100
	651	GgA	651323320	0.504	97.40	0.25	-	100
GR67	651	Ao	6512049	0.002	0.50	0.04	-	100
	651	Es	6512857	0.007	1.40	0.25	-	100
	651	Gt	6513259	0.014	2.80	0.04	-	100
	651	Le	6514229	0.031	6.20	0.04	-	100
	651	Mr	6514455	0.085	17.00	0.05	-	100
	651	Tt	6515859	0.177	35.60	0.04	-	100
	651	GgA	651323320	0.182	36.60	0.25	-	100
GR75	651	Le	6514229	0.103	20.70	0.04	-	100
	651	Mr	6514455	0.235	47.40	0.05	-	100
	651	Ms	6514457	0.020	4.00	0.01	-	100
	651	Tw	6515865	0.118	23.70	0.05	-	100
	651	LcA	651422520	0.021	4.20	0.25	-	100
GR83	651	Le	6514229	0.169	36.10	0.04	-	100
	651	Mr	6514455	0.138	29.40	0.05	-	100
	651	Ms	6514457	0.089	18.90	0.01	-	100
	651	Tw	6515865	0.004	0.90	0.05	-	100
	651	Vf	6516231	0.060	12.80	0.01	-	100
	651	GxA	651326720	0.008	1.80	0.23	-	100
GR91	651	Aa	6512021	0.016	3.00	0.26	-	100
	651	Ge	6513229	0.000	0.00	0.26	-	100
	651	Le	6514229	0.121	23.50	0.04	-	100
	651	Mr	6514455	0.090	17.50	0.05	-	100
	651	Ms	6514457	0.151	29.40	0.01	-	100
	651	Tg	6515833	0.014	2.60	0.04	-	100
	651	Tw	6515865	0.035	6.70	0.05	-	100
	651	Vf	6516231	0.066	12.80	0.01	-	100
	651	GgA	651323320	0.011	2.20	0.25	-	100
	651	RbA	651542320	0.012	2.20	0.26	-	100
GW83	651	Ma	6514421	0.009	3.20	0.40	-	100
	651	Mp	6514451	0.001	0.30	0.25	-	100
	651	Mr	6514455	0.002	0.50	0.05	-	100
	651	TD	6515826	0.003	1.00	1.20	-	100
	651	AbA	651202320	0.011	3.80	0.38	-	100
	651	GgA	651323320	0.114	38.90	0.25	-	100
	651	GxA	651326720	0.062	21.30	0.23	-	100
	651	LcA	651422520	0.075	25.60	0.25	-	100
	651	RbA	651542320	0.016	5.30	0.26	-	100
IN07	651	Le	6514229	0.174	67.70	0.04	-	100
	651	Mr	6514455	0.001	0.40	0.05	-	100
	651	Tw	6515865	0.042	16.40	0.05	-	100
	651	LcA	651422520	0.040	15.50	0.25	-	100
IN27	651	Ao	6512049	0.018	17.00	0.04	-	100
	651	GgA	651323320	0.088	83.00	0.25	-	100
IN35	651	Ao	6512049	0.043	17.90	0.04	-	100
	651	Gt	6513259	0.152	62.90	0.04	-	100
	651	Gv	6513263	0.047	19.20	0.01	-	100
IN43	651	Ao	6512049	0.020	7.90	0.04	-	100
	651	Gt	6513259	0.165	64.60	0.04	-	100
	651	Gv	6513263	0.027	10.60	0.01	-	100
	651	Mr	6514455	0.029	11.50	0.05	-	100
	651	GgA	651323320	0.014	5.40	0.25	-	100
IN51	651	Ao	6512049	0.069	29.80	0.04	-	100
	651	Gt	6513259	0.154	66.50	0.04	-	100

Major Basin ID: MV

Area ID	Book Number	Map Unit	Soil ID	Area (sq mi)	Area (%)	XKSAT	Rock Percent (%)	Effective Rock (%)
IN51	651	GgA	651323320	0.009	3.80	0.25	-	100
IN59	651	An	6512047	0.003	1.50	0.05	-	100
	651	Ao	6512049	0.055	27.30	0.04	-	100
	651	Gt	6513259	0.143	71.00	0.04	-	100
	651	Mr	6514455	0.001	0.20	0.05	-	100
IN67	651	An	6512047	0.005	2.60	0.05	-	100
	651	Ao	6512049	0.059	29.80	0.04	-	100
	651	Gt	6513259	0.111	56.40	0.04	-	100
	651	Mr	6514455	0.022	11.20	0.05	-	100
IN75	651	Aa	6512021	0.011	5.40	0.26	-	100
	651	Ao	6512049	0.014	6.80	0.04	-	100
	651	Es	6512857	0.019	9.40	0.25	-	100
	651	Gt	6513259	0.068	34.10	0.04	-	100
	651	Vh	6516235	0.019	9.60	0.27	-	100
	651	GgA	651323320	0.069	34.80	0.25	-	100
IN83	651	Ao	6512049	0.091	46.60	0.04	-	100
	651	Gt	6513259	0.012	6.10	0.04	-	100
	651	GgA	651323320	0.092	47.20	0.25	-	100
IN91	651	Gt	6513259	0.185	100.00	0.04	-	100
INAF	651	Aa	6512021	0.003	0.70	0.26	-	100
	651	Br	6512255	0.010	2.20	1.05	-	100
	651	Bs	6512257	0.003	0.70	0.39	-	100
	651	Ge	6513229	0.108	22.80	0.26	-	100
	651	Gt	6513259	0.084	17.80	0.04	-	100
	651	Gv	6513263	0.025	5.20	0.01	-	100
	651	Lb	6514223	0.007	1.40	0.40	-	100
	651	Ma	6514421	0.020	4.20	0.40	-	100
	651	Mr	6514455	0.002	0.40	0.05	-	100
	651	TD	6515826	0.006	1.20	1.20	-	100
	651	Tt	6515859	0.060	12.60	0.04	-	100
	651	Vh	6516235	0.015	3.20	0.27	-	100
	651	AbA	651202320	0.004	0.80	0.38	-	100
	651	AbB	651202322	0.016	3.30	0.39	-	100
	651	GgA	651323320	0.062	13.20	0.25	-	100
	651	LcA	651422520	0.039	8.30	0.25	-	100
	651	PsA	651505720	0.003	0.70	0.25	-	100
	651	RbA	651542320	0.006	1.30	0.26	-	100
INAV	651	Gt	6513259	0.002	1.00	0.04	-	100
	651	Le	6514229	0.157	66.80	0.04	-	100
	651	Tu	6515861	0.010	4.20	0.25	-	100
	651	LcA	651422520	0.066	28.00	0.25	-	100
INLO	651	Gt	6513259	0.138	94.00	0.04	-	100
	651	Le	6514229	0.009	6.00	0.04	-	100
IS07	651	Gt	6513259	0.061	6.00	0.04	-	100
	651	Le	6514229	0.119	11.60	0.04	-	100
	651	Mp	6514451	0.168	16.40	0.25	-	100
	651	Mr	6514455	0.406	39.70	0.05	-	100
	651	Tt	6515859	0.208	20.30	0.04	-	100
	651	Tu	6515861	0.017	1.70	0.25	-	100
	651	Tw	6515865	0.006	0.60	0.05	-	100
	651	GgA	651323320	0.003	0.30	0.25	-	100
	651	LcA	651422520	0.034	3.30	0.25	-	100
IS27	651	Le	6514229	0.139	58.10	0.04	-	100
	651	GgA	651323320	0.062	26.10	0.25	-	100
	651	LcA	651422520	0.038	15.90	0.25	-	100
IS35	651	An	6512047	0.008	0.80	0.05	-	100
	651	Ao	6512049	0.539	54.40	0.04	-	100
	651	Bs	6512257	0.002	0.20	0.39	-	100
	651	Le	6514229	0.065	6.50	0.04	-	100
	651	Ma	6514421	0.024	2.50	0.40	-	100
	651	Vh	6516235	0.046	4.60	0.27	-	100

Area ID	Book Number	Map Unit	Soil ID	Area (sq mi)	Area (%)	XKSAT	Rock Percent (%)	Effective Rock (%)
Major Basin ID: MV								
IS35	651	GgA	651323320	0.307	31.00	0.25	-	100
IS43	651	Aa	6512021	0.031	6.60	0.26	-	100
	651	GgA	651323320	0.437	93.40	0.25	-	100
IS51	651	Aa	6512021	0.202	20.30	0.26	-	100
	651	An	6512047	0.006	0.60	0.05	-	100
	651	Ao	6512049	0.050	5.00	0.04	-	100
	651	GgA	651323320	0.737	74.20	0.25	-	100
IS59	651	Aa	6512021	0.004	0.40	0.26	-	100
	651	Ao	6512049	0.082	8.10	0.04	-	100
	651	Gt	6513259	0.047	4.60	0.04	-	100
	651	GgA	651323320	0.881	86.90	0.25	-	100
IS75	651	Aa	6512021	0.007	1.20	0.26	-	100
	651	Ao	6512049	0.166	26.90	0.04	-	100
	651	Ge	6513229	0.026	4.20	0.26	-	100
	651	Gt	6513259	0.242	39.40	0.04	-	100
	651	Ma	6514421	0.024	3.90	0.40	-	100
	651	Vh	6516235	0.039	6.30	0.27	-	100
	651	Vk	6516241	0.028	4.50	0.26	-	100
	651	GgA	651323320	0.084	13.70	0.25	-	100
IS83	651	Aa	6512021	0.087	8.70	0.26	-	100
	651	An	6512047	0.038	3.90	0.05	-	100
	651	Ao	6512049	0.291	29.40	0.04	-	100
	651	Bt	6512259	0.041	4.20	0.25	-	100
	651	Es	6512857	0.018	1.80	0.25	-	100
	651	Gt	6513259	0.104	10.50	0.04	-	100
	651	Le	6514229	0.005	0.50	0.04	-	100
	651	Tt	6515859	0.008	0.80	0.04	-	100
	651	Vh	6516235	0.009	0.90	0.27	-	100
	651	Vk	6516241	0.002	0.20	0.26	-	100
	651	GgA	651323320	0.387	39.10	0.25	-	100
IS91	651	Ao	6512049	0.031	3.10	0.04	-	100
	651	Es	6512857	0.003	0.30	0.25	-	100
	651	Gt	6513259	0.434	43.40	0.04	-	100
	651	Le	6514229	0.134	13.40	0.04	-	100
	651	Mr	6514455	0.081	8.10	0.05	-	100
	651	Tt	6515859	0.304	30.40	0.04	-	100
	651	Tw	6515865	0.009	0.90	0.05	-	100
	651	GgA	651323320	0.003	0.30	0.25	-	100
IS99	651	Le	6514229	0.180	55.90	0.04	-	100
	651	Mr	6514455	0.124	38.30	0.05	-	100
	651	Tt	6515859	0.019	5.90	0.04	-	100
ISAF	651	Aa	6512021	0.068	6.80	0.26	-	100
	651	Ao	6512049	0.085	8.60	0.04	-	100
	651	Br	6512255	0.032	3.20	1.05	-	100
	651	Bs	6512257	0.004	0.40	0.39	-	100
	651	Ge	6513229	0.057	5.80	0.26	-	100
	651	Gt	6513259	0.007	0.70	0.04	-	100
	651	Lb	6514223	0.015	1.60	0.40	-	100
	651	Le	6514229	0.006	0.60	0.04	-	100
	651	Ma	6514421	0.030	3.00	0.40	-	100
	651	Mp	6514451	0.001	0.10	0.25	-	100
	651	Mr	6514455	0.014	1.40	0.05	-	100
	651	TD	6515826	0.033	3.30	1.20	-	100
	651	Vg	6516233	0.017	1.70	0.91	-	100
	651	Vh	6516235	0.112	11.40	0.27	-	100
	651	Vk	6516241	0.013	1.30	0.26	-	100
	651	AbA	651202320	0.113	11.40	0.38	-	100
	651	GgA	651323320	0.325	32.80	0.25	-	100
	651	GPI	651325036	0.005	0.50	0.00	-	100
	651	LcA	651422520	0.053	5.30	0.25	-	100
ISGC	651	Ao	6512049	0.069	43.60	0.04	-	100
	651	Gt	6513259	0.007	4.40	0.04	-	100

Area ID	Book Number	Map Unit	Soil ID	Area (sq mi)	Area (%)	XKSAT	Rock Percent (%)	Effective Rock (%)
Major Basin ID: MV								
ISGC	651	GgA	651323320	0.083	51.90	0.25	-	100
ISLO	651	Gt	6513259	0.234	34.10	0.04	-	100
	651	Le	6514229	0.155	22.60	0.04	-	100
	651	Mr	6514455	0.125	18.20	0.05	-	100
	651	Tt	6515859	0.172	25.10	0.04	-	100
MD07	651	Gt	6513259	0.010	1.30	0.04	-	100
	651	Le	6514229	0.584	74.60	0.04	-	100
	651	Mr	6514455	0.074	9.50	0.05	-	100
	651	Tu	6515861	0.059	7.60	0.25	-	100
	651	Tw	6515865	0.018	2.30	0.05	-	100
	651	LcA	651422520	0.037	4.80	0.25	-	100
MD27	651	An	6512047	0.013	5.40	0.05	-	100
	651	Ao	6512049	0.040	16.60	0.04	-	100
	651	Gt	6513259	0.018	7.40	0.04	-	100
	651	Le	6514229	0.098	40.60	0.04	-	100
	651	GgA	651323320	0.072	30.00	0.25	-	100
MD35	651	Aa	6512021	0.002	0.20	0.26	-	100
	651	An	6512047	0.008	0.80	0.05	-	100
	651	Ao	6512049	0.270	27.00	0.04	-	100
	651	Gt	6513259	0.486	48.70	0.04	-	100
	651	Gv	6513263	0.204	20.40	0.01	-	100
	651	Tc	6515825	0.012	1.20	0.40	-	100
	651	BPI	651225036	0.001	0.10	0.00	-	100
	651	GgA	651323320	0.008	0.80	0.25	-	100
	651	GPI	651325036	0.007	0.70	0.00	-	100
MD43	651	Ao	6512049	0.025	2.50	0.04	-	100
	651	Gt	6513259	0.528	52.80	0.04	-	100
	651	Gv	6513263	0.105	10.50	0.01	-	100
	651	Mr	6514455	0.016	1.60	0.05	-	100
	651	Tg	6515833	0.013	1.30	0.04	-	100
	651	Tt	6515859	0.265	26.50	0.04	-	100
	651	BPI	651225036	0.043	4.30	0.00	-	100
	651	CrB	651245522	0.005	0.50	0.40	-	100
MD51	651	Aa	6512021	0.022	2.20	0.26	-	100
	651	Ao	6512049	0.386	38.50	0.04	-	100
	651	Gt	6513259	0.335	33.40	0.04	-	100
	651	Tt	6515859	0.107	10.70	0.04	-	100
	651	GgA	651323320	0.152	15.20	0.25	-	100
MD59	651	Aa	6512021	0.025	2.50	0.26	-	100
	651	An	6512047	0.078	7.70	0.05	-	100
	651	Ao	6512049	0.216	21.50	0.04	-	100
	651	Gt	6513259	0.242	24.00	0.04	-	100
	651	Mr	6514455	0.065	6.40	0.05	-	100
	651	Tt	6515859	0.045	4.50	0.04	-	100
	651	GgA	651323320	0.334	33.20	0.25	-	100
MD67	651	Ao	6512049	0.441	45.00	0.04	-	100
	651	Gt	6513259	0.330	33.80	0.04	-	100
	651	Mr	6514455	0.032	3.30	0.05	-	100
	651	Tt	6515859	0.008	0.80	0.04	-	100
	651	GgA	651323320	0.167	17.10	0.25	-	100
MD75	651	Aa	6512021	0.018	1.80	0.26	-	100
	651	An	6512047	0.028	2.80	0.05	-	100
	651	Ao	6512049	0.457	45.60	0.04	-	100
	651	Bt	6512259	0.014	1.40	0.25	-	100
	651	Es	6512857	0.001	0.10	0.25	-	100
	651	Ge	6513229	0.011	1.10	0.26	-	100
	651	Gt	6513259	0.132	13.20	0.04	-	100
	651	Vh	6516235	0.026	2.60	0.27	-	100
	651	GgA	651323320	0.314	31.30	0.25	-	100
MD83	651	Aa	6512021	0.025	2.60	0.26	-	100
	651	An	6512047	0.022	2.30	0.05	-	100
	651	Ao	6512049	0.221	22.30	0.04	-	100

Major Basin ID: MV

Area ID	Book Number	Map Unit	Soil ID	Area (sq mi)	Area (%)	XKSAT	Rock Percent (%)	Effective Rock (%)
MD83	651	Gt	6513259	0.660	66.50	0.04	-	100
	651	GgA	651323320	0.064	6.40	0.25	-	100
MD91	651	Ao	6512049	0.277	27.50	0.04	-	100
	651	Gt	6513259	0.665	66.00	0.04	-	100
	651	GgA	651323320	0.066	6.50	0.25	-	100
MD99	651	Gt	6513259	0.163	51.20	0.04	-	100
	651	Le	6514229	0.089	27.80	0.04	-	100
	651	Mr	6514455	0.000	0.00	0.05	-	100
	651	Tt	6515859	0.065	20.50	0.04	-	100
	651	LcA	651422520	0.002	0.50	0.25	-	100
MDAF	651	Br	6512255	0.092	11.00	1.05	-	100
	651	Bs	6512257	0.003	0.30	0.39	-	100
	651	Ge	6513229	0.002	0.20	0.26	-	100
	651	Gt	6513259	0.033	3.90	0.04	-	100
	651	Gv	6513263	0.025	3.00	0.01	-	100
	651	Lb	6514223	0.018	2.20	0.40	-	100
	651	Le	6514229	0.015	1.80	0.04	-	100
	651	Ma	6514421	0.038	4.50	0.40	-	100
	651	Mr	6514455	0.103	12.40	0.05	-	100
	651	TD	6515826	0.132	15.80	1.20	-	100
	651	Tt	6515859	0.107	12.80	0.04	-	100
	651	Vh	6516235	0.015	1.80	0.27	-	100
	651	GgA	651323320	0.062	7.40	0.25	-	100
	651	GxA	651326720	0.008	0.90	0.23	-	100
	651	LcA	651422520	0.149	17.90	0.25	-	100
	651	LcB	651422522	0.030	3.60	0.25	-	100
	651	PeA	651502920	0.004	0.50	0.37	-	100
MDAV	651	Gt	6513259	0.199	20.90	0.04	-	100
	651	Lb	6514223	0.017	1.80	0.40	-	100
	651	Le	6514229	0.340	35.70	0.04	-	100
	651	Mr	6514455	0.028	2.90	0.05	-	100
	651	Tt	6515859	0.063	6.60	0.04	-	100
	651	Tu	6515861	0.008	0.90	0.25	-	100
	651	Tw	6515865	0.010	1.10	0.05	-	100
	651	LcA	651422520	0.288	30.20	0.25	-	100
MDLO	651	Ao	6512049	0.025	3.70	0.04	-	100
	651	Gt	6513259	0.619	92.20	0.04	-	100
	651	Le	6514229	0.014	2.00	0.04	-	100
	651	Tt	6515859	0.004	0.60	0.04	-	100
	651	GgA	651323320	0.010	1.50	0.25	-	100
NO27	651	Ao	6512049	0.006	4.50	0.04	-	100
	651	Mr	6514455	0.030	23.70	0.05	-	100
	651	Tc	6515825	0.005	3.70	0.40	-	100
	651	Tt	6515859	0.083	65.90	0.04	-	100
	651	Tw	6515865	0.000	0.10	0.05	-	100
	651	GgA	651323320	0.003	2.10	0.25	-	100
NO35	651	Aa	6512021	0.072	7.20	0.26	-	100
	651	An	6512047	0.085	8.60	0.05	-	100
	651	Ao	6512049	0.139	14.00	0.04	-	100
	651	Bt	6512259	0.001	0.10	0.25	-	100
	651	Tt	6515859	0.043	4.30	0.04	-	100
	651	GgA	651323320	0.652	65.80	0.25	-	100
NO43	651	Aa	6512021	0.067	6.70	0.26	-	100
	651	Ao	6512049	0.363	36.50	0.04	-	100
	651	Vk	6516241	0.038	3.90	0.26	-	100
	651	GgA	651323320	0.526	52.90	0.25	-	100
NO51	651	Aa	6512021	0.230	23.10	0.26	-	100
	651	An	6512047	0.018	1.90	0.05	-	100
	651	Ao	6512049	0.244	24.60	0.04	-	100
	651	Bs	6512257	0.038	3.90	0.39	-	100
	651	Bt	6512259	0.008	0.80	0.25	-	100
	651	Es	6512857	0.016	1.60	0.25	-	100

Major Basin ID: MV

Area ID	Book Number	Map Unit	Soil ID	Area (sq mi)	Area (%)	XKSAT	Rock Percent (%)	Effective Rock (%)
NO51	651	Ge	6513229	0.035	3.60	0.26	-	100
	651	Tt	6515859	0.020	2.10	0.04	-	100
	651	Vh	6516235	0.029	3.00	0.27	-	100
	651	Vk	6516241	0.074	7.40	0.26	-	100
	651	GgA	651323320	0.280	28.20	0.25	-	100
NO59	651	Aa	6512021	0.039	3.90	0.26	-	100
	651	Ao	6512049	0.142	14.30	0.04	-	100
	651	Bs	6512257	0.013	1.30	0.39	-	100
	651	Es	6512857	0.053	5.30	0.25	-	100
	651	Ge	6513229	0.042	4.20	0.26	-	100
	651	Gt	6513259	0.023	2.30	0.04	-	100
	651	Le	6514229	0.038	3.80	0.04	-	100
	651	Mr	6514455	0.112	11.20	0.05	-	100
	651	Te	6515829	0.008	0.80	0.25	-	100
	651	Tt	6515859	0.302	30.50	0.04	-	100
	651	Tw	6515865	0.004	0.40	0.05	-	100
	651	Vh	6516235	0.006	0.60	0.27	-	100
	651	GgA	651323320	0.183	18.50	0.25	-	100
	651	LcA	651422520	0.029	2.90	0.25	-	100
NO67	651	Ao	6512049	0.038	4.00	0.04	-	100
	651	Le	6514229	0.174	18.20	0.04	-	100
	651	Mr	6514455	0.277	29.00	0.05	-	100
	651	Tt	6515859	0.179	18.70	0.04	-	100
	651	Tw	6515865	0.241	25.20	0.05	-	100
	651	AbA	651202320	0.000	0.00	0.38	-	100
	651	LcA	651422520	0.047	4.90	0.25	-	100
NO75	651	Lb	6514223	0.002	0.50	0.40	-	100
	651	Le	6514229	0.056	11.00	0.04	-	100
	651	Mr	6514455	0.208	41.10	0.05	-	100
	651	Ms	6514457	0.011	2.20	0.01	-	100
	651	Tt	6515859	0.048	9.50	0.04	-	100
	651	Tw	6515865	0.086	17.00	0.05	-	100
	651	GxA	651326720	0.019	3.80	0.23	-	100
	651	LcA	651422520	0.075	14.90	0.25	-	100
NO83	651	Gt	6513259	0.176	17.50	0.04	-	100
	651	Lb	6514223	0.013	1.30	0.40	-	100
	651	Le	6514229	0.268	26.60	0.04	-	100
	651	Mr	6514455	0.231	23.00	0.05	-	100
	651	Ms	6514457	0.056	5.60	0.01	-	100
	651	Ta	6515821	0.018	1.80	0.25	-	100
	651	Tw	6515865	0.192	19.10	0.05	-	100
	651	GgA	651323320	0.012	1.10	0.25	-	100
	651	GxA	651326720	0.011	1.10	0.23	-	100
	651	LcA	651422520	0.004	0.40	0.25	-	100
	651	RbA	651542320	0.025	2.50	0.26	-	100
NO91	651	Bt	6512259	0.006	0.60	0.25	-	100
	651	Gt	6513259	0.042	4.20	0.04	-	100
	651	Lb	6514223	0.010	1.00	0.40	-	100
	651	Le	6514229	0.011	1.10	0.04	-	100
	651	Mr	6514455	0.583	58.70	0.05	-	100
	651	Ms	6514457	0.027	2.80	0.01	-	100
	651	Tg	6515833	0.007	0.70	0.04	-	100
	651	Tw	6515865	0.038	3.90	0.05	-	100
	651	Vf	6516231	0.010	1.00	0.01	-	100
	651	GxA	651326720	0.022	2.20	0.23	-	100
	651	LcA	651422520	0.204	20.50	0.25	-	100
	651	PeA	651502920	0.018	1.80	0.37	-	100
	651	RbA	651542320	0.002	0.20	0.26	-	100
	651	TfA	651583120	0.014	1.40	0.37	-	100
NOLO	651	Lb	6514223	0.041	14.60	0.40	-	100
	651	Mr	6514455	0.098	35.00	0.05	-	100
	651	Tg	6515833	0.003	0.90	0.04	-	100
	651	Tw	6515865	0.012	4.10	0.05	-	100

Area ID	Book Number	Map Unit	Soil ID	Area (sq mi)	Area (%)	XKSAT	Rock Percent (%)	Effective Rock (%)
Major Basin ID: MV								
NOLO	651	Vf	6516231	0.037	13.20	0.01	-	100
	651	GxA	651326720	0.002	0.70	0.23	-	100
	651	LcA	651422520	0.072	25.80	0.25	-	100
	651	RbA	651542320	0.016	5.80	0.26	-	100
OL35	651	Ao	6512049	0.032	15.00	0.04	-	100
	651	GgA	651323320	0.182	85.00	0.25	-	100
OL43	651	Aa	6512021	0.046	7.30	0.26	-	100
	651	Ao	6512049	0.098	15.50	0.04	-	100
	651	Bs	6512257	0.018	2.90	0.39	-	100
	651	Es	6512857	0.012	1.80	0.25	-	100
	651	Vh	6516235	0.006	1.00	0.27	-	100
	651	GgA	651323320	0.454	71.60	0.25	-	100
OL51	651	Ao	6512049	0.357	36.00	0.04	-	100
	651	Le	6514229	0.020	2.00	0.04	-	100
	651	Mr	6514455	0.184	18.60	0.05	-	100
	651	Tt	6515859	0.011	1.10	0.04	-	100
	651	Vh	6516235	0.002	0.20	0.27	-	100
	651	Vk	6516241	0.016	1.60	0.26	-	100
	651	GgA	651323320	0.403	40.60	0.25	-	100
OL59	651	Ao	6512049	0.038	3.90	0.04	-	100
	651	Gt	6513259	0.001	0.10	0.04	-	100
	651	Le	6514229	0.232	23.40	0.04	-	100
	651	Mr	6514455	0.475	48.00	0.05	-	100
	651	Tw	6515865	0.180	18.20	0.05	-	100
	651	Vf	6516231	0.012	1.30	0.01	-	100
	651	GgA	651323320	0.015	1.60	0.25	-	100
	651	LcA	651422520	0.013	1.30	0.25	-	100
	651	RbA	651542320	0.024	2.40	0.26	-	100
OL67	651	Gt	6513259	0.025	2.60	0.04	-	100
	651	Gv	6513263	0.026	2.70	0.01	-	100
	651	Le	6514229	0.348	36.20	0.04	-	100
	651	Mr	6514455	0.255	26.60	0.05	-	100
	651	Tg	6515833	0.012	1.30	0.04	-	100
	651	Tw	6515865	0.122	12.80	0.05	-	100
	651	AbA	651202320	0.002	0.20	0.38	-	100
	651	GgA	651323320	0.024	2.40	0.25	-	100
	651	LcA	651422520	0.125	13.00	0.25	-	100
	651	PeA	651502920	0.018	1.80	0.37	-	100
	651	RbA	651542320	0.003	0.30	0.26	-	100
OL75	651	Ao	6512049	0.006	0.60	0.04	-	100
	651	Gt	6513259	0.007	0.70	0.04	-	100
	651	Le	6514229	0.149	14.90	0.04	-	100
	651	Mr	6514455	0.432	43.10	0.05	-	100
	651	Ms	6514457	0.094	9.40	0.01	-	100
	651	Tu	6515861	0.006	0.60	0.25	-	100
	651	Tw	6515865	0.251	25.00	0.05	-	100
	651	Vf	6516231	0.004	0.40	0.01	-	100
	651	GxA	651326720	0.004	0.40	0.23	-	100
	651	LcA	651422520	0.042	4.20	0.25	-	100
	651	RbA	651542320	0.008	0.70	0.26	-	100
OL83	651	Le	6514229	0.256	47.60	0.04	-	100
	651	Mr	6514455	0.070	12.90	0.05	-	100
	651	Ms	6514457	0.144	26.70	0.01	-	100
	651	Tg	6515833	0.007	1.30	0.04	-	100
	651	Tw	6515865	0.042	7.80	0.05	-	100
	651	Vf	6516231	0.019	3.60	0.01	-	100
OL91	651	Le	6514229	0.257	25.30	0.04	-	100
	651	Mr	6514455	0.303	29.80	0.05	-	100
	651	Ms	6514457	0.108	10.60	0.01	-	100
	651	Tg	6515833	0.010	0.90	0.04	-	100
	651	Tw	6515865	0.122	12.00	0.05	-	100
	651	Vf	6516231	0.080	7.90	0.01	-	100

Area ID	Book Number	Map Unit	Soil ID	Area (sq mi)	Area (%)	XKSAT	Rock Percent (%)	Effective Rock (%)
Major Basin ID: MV								
OL91	651	GxA	651326720	0.028	2.70	0.23	-	100
	651	LcA	651422520	0.070	6.90	0.25	-	100
	651	RbA	651542320	0.039	3.80	0.26	-	100
OLLO	651	Ao	6512049	0.000	0.10	0.04	-	100
	651	Gt	6513259	0.023	14.60	0.04	-	100
	651	Le	6514229	0.007	4.20	0.04	-	100
	651	Mr	6514455	0.058	36.50	0.05	-	100
	651	Tw	6515865	0.019	11.80	0.05	-	100
	651	Vf	6516231	0.028	17.60	0.01	-	100
	651	GxA	651326720	0.015	9.10	0.23	-	100
	651	LcA	651422520	0.005	3.40	0.25	-	100
	651	RbA	651542320	0.004	2.70	0.26	-	100
OW67	651	Es	6512857	0.021	17.30	0.25	-	100
	651	Le	6514229	0.007	5.60	0.04	-	100
	651	Mr	6514455	0.024	20.10	0.05	-	100
	651	Tt	6515859	0.052	43.80	0.04	-	100
	651	GgA	651323320	0.016	13.20	0.25	-	100
OW75	651	Le	6514229	0.105	21.00	0.04	-	100
	651	Mr	6514455	0.247	49.50	0.05	-	100
	651	Tt	6515859	0.074	14.90	0.04	-	100
	651	Tu	6515861	0.004	0.70	0.25	-	100
	651	Tw	6515865	0.053	10.70	0.05	-	100
	651	LcA	651422520	0.016	3.20	0.25	-	100
OW83	651	Gt	6513259	0.006	1.20	0.04	-	100
	651	Le	6514229	0.075	15.00	0.04	-	100
	651	Mr	6514455	0.336	67.80	0.05	-	100
	651	Tu	6515861	0.000	0.00	0.25	-	100
	651	Tw	6515865	0.006	1.20	0.05	-	100
	651	GgA	651323320	0.000	0.00	0.25	-	100
	651	LcA	651422520	0.072	14.50	0.25	-	100
	651	RbA	651542320	0.001	0.30	0.26	-	100
PE51	651	Ao	6512049	0.015	3.60	0.04	-	100
	651	Le	6514229	0.018	4.30	0.04	-	100
	651	Mp	6514451	0.005	1.20	0.25	-	100
	651	Mr	6514455	0.237	56.60	0.05	-	100
	651	Tt	6515859	0.012	2.90	0.04	-	100
	651	Tw	6515865	0.081	19.40	0.05	-	100
	651	Vf	6516231	0.031	7.50	0.01	-	100
	651	GgA	651323320	0.008	2.00	0.25	-	100
	651	LcA	651422520	0.011	2.70	0.25	-	100
PE59	651	Bt	6512259	0.003	0.30	0.25	-	100
	651	Gt	6513259	0.050	5.00	0.04	-	100
	651	Le	6514229	0.263	26.60	0.04	-	100
	651	Mr	6514455	0.421	42.60	0.05	-	100
	651	Tg	6515833	0.007	0.70	0.04	-	100
	651	Th	6515835	0.003	0.30	0.04	-	100
	651	Tw	6515865	0.169	17.10	0.05	-	100
	651	Vf	6516231	0.028	2.90	0.01	-	100
	651	GxA	651326720	0.001	0.10	0.23	-	100
	651	LcA	651422520	0.036	3.60	0.25	-	100
	651	PeA	651502920	0.009	0.90	0.37	-	100
PE67	651	Gt	6513259	0.011	1.10	0.04	-	100
	651	Le	6514229	0.124	12.90	0.04	-	100
	651	Mr	6514455	0.354	36.90	0.05	-	100
	651	Tg	6515833	0.020	2.10	0.04	-	100
	651	Th	6515835	0.002	0.20	0.04	-	100
	651	Tw	6515865	0.075	7.80	0.05	-	100
	651	Vf	6516231	0.038	3.90	0.01	-	100
	651	GxA	651326720	0.018	1.90	0.23	-	100
	651	LcA	651422520	0.278	28.90	0.25	-	100
	651	RbA	651542320	0.041	4.30	0.26	-	100
PE75	651	Gt	6513259	0.027	2.70	0.04	-	100

Major Basin ID: MV

Area ID	Book Number	Map Unit	Soil ID	Area (sq mi)	Area (%)	XKSAT	Rock Percent (%)	Effective Rock (%)
PE75	651	Le	6514229	0.065	6.50	0.04	-	100
	651	Mp	6514451	0.006	0.60	0.25	-	100
	651	Mr	6514455	0.305	30.20	0.05	-	100
	651	Ms	6514457	0.051	5.00	0.01	-	100
	651	Te	6515829	0.017	1.70	0.25	-	100
	651	Tu	6515861	0.015	1.50	0.25	-	100
	651	Tw	6515865	0.038	3.80	0.05	-	100
	651	Vf	6516231	0.145	14.40	0.01	-	100
	651	GxA	651326720	0.013	1.30	0.23	-	100
	651	LcA	651422520	0.236	23.40	0.25	-	100
	651	RbA	651542320	0.021	2.10	0.26	-	100
	651	RbB	651542322	0.069	6.90	0.25	-	100
PE83	651	Le	6514229	0.143	14.30	0.04	-	100
	651	Mp	6514451	0.007	0.70	0.25	-	100
	651	Mr	6514455	0.368	36.90	0.05	-	100
	651	Ms	6514457	0.247	24.70	0.01	-	100
	651	Te	6515829	0.003	0.30	0.25	-	100
	651	Tg	6515833	0.009	0.90	0.04	-	100
	651	Tw	6515865	0.011	1.10	0.05	-	100
	651	Vf	6516231	0.126	12.60	0.01	-	100
	651	LcA	651422520	0.009	0.90	0.25	-	100
	651	RbA	651542320	0.077	7.70	0.26	-	100
PE91	651	Ao	6512049	0.016	3.20	0.04	-	100
	651	Le	6514229	0.115	22.70	0.04	-	100
	651	Mr	6514455	0.078	15.40	0.05	-	100
	651	Ms	6514457	0.067	13.10	0.01	-	100
	651	Tg	6515833	0.007	1.40	0.04	-	100
	651	Th	6515835	0.002	0.50	0.04	-	100
	651	Tw	6515865	0.059	11.60	0.05	-	100
	651	Vf	6516231	0.091	17.80	0.01	-	100
	651	GgA	651323320	0.002	0.40	0.25	-	100
	651	GxA	651326720	0.058	11.50	0.23	-	100
	651	RbA	651542320	0.013	2.60	0.26	-	100
PELO	651	Aa	6512021	0.056	20.60	0.26	-	100
	651	An	6512047	0.026	9.50	0.05	-	100
	651	Ao	6512049	0.058	21.30	0.04	-	100
	651	Bs	6512257	0.006	2.20	0.39	-	100
	651	Ge	6513229	0.013	4.60	0.26	-	100
	651	Gt	6513259	0.010	3.80	0.04	-	100
	651	Ma	6514421	0.005	1.80	0.40	-	100
	651	Mr	6514455	0.010	3.50	0.05	-	100
	651	GgA	651323320	0.083	30.60	0.25	-	100
	651	GxA	651326720	0.002	0.70	0.23	-	100
	651	RbA	651542320	0.003	1.10	0.26	-	100
RI07	651	Gt	6513259	0.113	14.80	0.04	-	100
	651	Le	6514229	0.016	2.00	0.04	-	100
	651	Mr	6514455	0.308	40.60	0.05	-	100
	651	Tt	6515859	0.268	35.30	0.04	-	100
	651	Tw	6515865	0.055	7.20	0.05	-	100
RIAF	651	Aa	6512021	0.024	3.70	0.26	-	100
	651	Ao	6512049	0.001	0.10	0.04	-	100
	651	Br	6512255	0.010	1.50	1.05	-	100
	651	Bs	6512257	0.043	6.50	0.39	-	100
	651	Ge	6513229	0.037	5.60	0.26	-	100
	651	Gt	6513259	0.147	22.20	0.04	-	100
	651	Le	6514229	0.003	0.40	0.04	-	100
	651	Ma	6514421	0.011	1.70	0.40	-	100
	651	Mr	6514455	0.081	12.20	0.05	-	100
	651	Ta	6515821	0.009	1.30	0.25	-	100
	651	TD	6515826	0.016	2.40	1.20	-	100
	651	Tt	6515859	0.111	16.80	0.04	-	100
	651	Vg	6516233	0.018	2.70	0.91	-	100
	651	Vh	6516235	0.066	10.00	0.27	-	100
	651	GgA	651323320	0.084	12.80	0.25	-	100

Major Basin ID: MV

Area ID	Book Number	Map Unit	Soil ID	Area (sq mi)	Area (%)	XKSAT	Rock Percent (%)	Effective Rock (%)
TB67	651	Le	6514229	0.011	4.30	0.04	-	100
	651	Mr	6514455	0.165	62.30	0.05	-	100
	651	Tw	6515865	0.050	19.00	0.05	-	100
	651	Vf	6516231	0.034	12.90	0.01	-	100
	651	LcA	651422520	0.004	1.50	0.25	-	100
TB75	651	Mp	6514451	0.078	7.60	0.25	-	100
	651	Mr	6514455	0.505	49.20	0.05	-	100
	651	TD	6515826	0.002	0.20	1.20	-	100
	651	Tw	6515865	0.019	1.80	0.05	-	100
	651	Vf	6516231	0.020	1.90	0.01	-	100
	651	GPI	651325036	0.001	0.10	0.00	-	100
	651	GxA	651326720	0.003	0.30	0.23	-	100
	651	LcA	651422520	0.399	38.90	0.25	-	100
TB83	651	Aa	6512021	0.002	0.20	0.26	-	100
	651	Mr	6514455	0.376	37.80	0.05	-	100
	651	TD	6515826	0.000	0.00	1.20	-	100
	651	Tw	6515865	0.036	3.60	0.05	-	100
	651	Vf	6516231	0.008	0.80	0.01	-	100
	651	Vh	6516235	0.005	0.50	0.27	-	100
	651	GgA	651323320	0.056	5.60	0.25	-	100
	651	GxA	651326720	0.024	2.40	0.23	-	100
	651	LcA	651422520	0.487	48.90	0.25	-	100
TBLO	651	Mr	6514455	0.097	98.10	0.05	-	100
	651	LcA	651422520	0.002	1.90	0.25	-	100
TM07	651	Gt	6513259	0.109	41.00	0.04	-	100
	651	Le	6514229	0.010	3.70	0.04	-	100
	651	Mr	6514455	0.004	1.60	0.05	-	100
	651	Tt	6515859	0.143	53.70	0.04	-	100
TM35	651	Aa	6512021	0.011	2.90	0.26	-	100
	651	An	6512047	0.021	5.20	0.05	-	100
	651	Ao	6512049	0.152	38.50	0.04	-	100
	651	Gt	6513259	0.075	19.00	0.04	-	100
	651	Gv	6513263	0.010	2.50	0.01	-	100
	651	Ma	6514421	0.003	0.70	0.40	-	100
	651	GgA	651323320	0.122	31.10	0.25	-	100
TM43	651	Ao	6512049	0.043	6.80	0.04	-	100
	651	Ge	6513229	0.036	5.70	0.26	-	100
	651	Gt	6513259	0.330	51.90	0.04	-	100
	651	Gv	6513263	0.014	2.20	0.01	-	100
	651	Tt	6515859	0.166	26.10	0.04	-	100
	651	BPI	651225036	0.000	0.10	0.00	-	100
	651	GgA	651323320	0.046	7.20	0.25	-	100
TM51	651	Aa	6512021	0.022	4.10	0.26	-	100
	651	An	6512047	0.001	0.10	0.05	-	100
	651	Ao	6512049	0.094	17.30	0.04	-	100
	651	Gt	6513259	0.095	17.40	0.04	-	100
	651	Tt	6515859	0.039	7.20	0.04	-	100
	651	GgA	651323320	0.293	53.90	0.25	-	100
TM59	651	Aa	6512021	0.002	0.30	0.26	-	100
	651	An	6512047	0.006	1.00	0.05	-	100
	651	Ao	6512049	0.236	39.30	0.04	-	100
	651	GgA	651323320	0.356	59.40	0.25	-	100
TM67	651	Ao	6512049	0.568	69.90	0.04	-	100
	651	Gt	6513259	0.020	2.40	0.04	-	100
	651	GgA	651323320	0.225	27.70	0.25	-	100
TM75	651	Ao	6512049	0.717	71.90	0.04	-	100
	651	Bt	6512259	0.008	0.80	0.25	-	100
	651	Gt	6513259	0.268	26.90	0.04	-	100
	651	GgA	651323320	0.005	0.50	0.25	-	100
TM83	651	Aa	6512021	0.130	13.20	0.26	-	100
	651	An	6512047	0.046	4.60	0.05	-	100

Area ID	Book Number	Map Unit	Soil ID	Area (sq mi)	Area (%)	XKSAT	Rock Percent (%)	Effective Rock (%)
Major Basin ID: MV								
TM83	651	Ao	6512049	0.436	43.90	0.04	-	100
	651	Bt	6512259	0.042	4.20	0.25	-	100
	651	Gt	6513259	0.064	6.40	0.04	-	100
	651	GgA	651323320	0.274	27.60	0.25	-	100
TM91	651	Aa	6512021	0.049	4.90	0.26	-	100
	651	An	6512047	0.212	21.20	0.05	-	100
	651	Ao	6512049	0.192	19.20	0.04	-	100
	651	Bt	6512259	0.012	1.20	0.25	-	100
	651	Gt	6513259	0.201	20.00	0.04	-	100
	651	Mr	6514455	0.007	0.70	0.05	-	100
	651	Tt	6515859	0.004	0.40	0.04	-	100
	651	Vk	6516241	0.026	2.60	0.26	-	100
	651	GgA	651323320	0.299	29.80	0.25	-	100
TM99	651	Gt	6513259	0.112	22.20	0.04	-	100
	651	Le	6514229	0.039	7.70	0.04	-	100
	651	Mr	6514455	0.244	48.30	0.05	-	100
	651	Tt	6515859	0.029	5.70	0.04	-	100
	651	Tw	6515865	0.082	16.20	0.05	-	100
TMAF	651	Br	6512255	0.035	4.60	1.05	-	100
	651	Bs	6512257	0.019	2.40	0.39	-	100
	651	Cb	6512423	0.037	4.80	0.40	-	100
	651	Ge	6513229	0.071	9.30	0.26	-	100
	651	Gt	6513259	0.156	20.50	0.04	-	100
	651	Le	6514229	0.039	5.10	0.04	-	100
	651	Ma	6514421	0.046	6.10	0.40	-	100
	651	Mr	6514455	0.019	2.40	0.05	-	100
	651	Ta	6515821	0.001	0.10	0.25	-	100
	651	TD	6515826	0.002	0.20	1.20	-	100
	651	Tt	6515859	0.193	25.40	0.04	-	100
	651	Vg	6516233	0.011	1.50	0.91	-	100
	651	Vh	6516235	0.008	1.00	0.27	-	100
	651	GgA	651323320	0.125	16.40	0.25	-	100
TMLO	651	Ao	6512049	0.068	13.70	0.04	-	100
	651	Gt	6513259	0.236	47.50	0.04	-	100
	651	Le	6514229	0.062	12.60	0.04	-	100
	651	Mr	6514455	0.065	13.00	0.05	-	100
	651	Tt	6515859	0.037	7.40	0.04	-	100
	651	Tw	6515865	0.011	2.30	0.05	-	100
	651	GgA	651323320	0.018	3.60	0.25	-	100
TMRI	651	Gt	6513259	0.013	5.50	0.04	-	100
	651	Le	6514229	0.194	80.70	0.04	-	100
	651	Mr	6514455	0.021	8.50	0.05	-	100
	651	Tt	6515859	0.013	5.30	0.04	-	100

Appendix B Glendale/Peoria ADMPU Area DDMSW Data

Rainfall Data

Subbasin Slope Adjustments

Existing and Future Subbasin Data

Existing and Future Land Use by Subbasin

Soils by Subbasin

Rainfall Data

ID	Method	Duration	2 Year	5 Year	10 Year	25 Year	50 Year	100 Year
DEFAULT	NOAA14	5 MIN	0.272	0.367	0.441	0.539	0.614	0.691
	NOAA14	10 MIN	0.413	0.559	0.671	0.820	0.934	1.051
	NOAA14	15 MIN	0.512	0.693	0.832	1.016	1.158	1.303
	NOAA14	30 MIN	0.690	0.934	1.120	1.369	1.560	1.755
	NOAA14	1 HOUR	0.854	1.155	1.386	1.694	1.931	2.172
	NOAA14	2 HOUR	0.980	1.308	1.559	1.898	2.157	2.425
	NOAA14	3 HOUR	1.015	1.334	1.587	1.935	2.210	2.497
	NOAA14	6 HOUR	1.174	1.501	1.762	2.121	2.401	2.692
	NOAA14	12 HOUR	1.316	1.664	1.937	2.306	2.588	2.880
	NOAA14	24 HOUR	1.528	1.975	2.327	2.816	3.202	3.606

Subbasin Slope Adjustments

Kimley-Horn and Associates, Inc.

Project: ***Glendale Stormwater Management Plan***
Subject: **Subbasin slope adjustments**
Model: **Glendale/Peoria**
Designed by: **ZRS** Date 1/18/2009 KHA Project No. 091910009
Checked by: **LAT** Date 1/19/2009 City of Glendale No. 089017

Objective: To average the subbasin slope for subbasins with varying slopes

Subbasin slope adjustments

Subbasin ID	ΔL_n (ft)	H_{up} (ft)	H_{down} (ft)	ΔH (ft)	$(\Delta L^3/\Delta H)^{1/2}$	G	Mean Slope (ft/ft)	Adjusted DSGE (ft)	Adjusted USGE (ft)
83RS	1772	1406.00	1379.48	26.5	14,484.7	28,598	**0.028**	100	236.07
	2177	1470.00	1406.00	64.0	12,696.9				
	415	1585.00	1470.00	115.0	788.4				
	446	1810.00	1585.00	225.0	627.9				
DV56	2151	1305.00	1292.00	13.0	27,668.7	31,456	**0.015**	100	158.90
	501	1352.00	1305.00	47.0	1,635.7				
	817	1560.00	1352.00	208.0	1,619.2				
	408	1800.07	1560.00	240.1	531.9				
DV67	2825	1360.00	1290.59	69.4	18,022.6	20,110	**0.037**	100	243.88
	368	1412.00	1360.00	52.0	979.0				
	260	1485.00	1412.00	73.0	490.7				
	422	1681.89	1485.00	196.9	617.8				
HV55	11431	1525.00	1414.11	110.9	116,059.4	123,096	**0.013**	100	274.42
	1125	1590.00	1525.00	65.0	4,680.3				
	672	1730.00	1590.00	140.0	1,472.3				
	598	2003.50	1730.00	273.5	884.2				
HV67	2865	1406.00	1381.21	24.8	30,799.9	40,800	**0.026**	100	269.05
	1327	1485.00	1406.00	79.0	5,438.7				
	1387	1770.00	1485.00	285.0	3,059.8				
	974	2180.00	1770.00	410.0	1,501.2				
HV83	950	1395.00	1361.24	33.8	5,039.5	7,603	**0.070**	100	239.42
	362	1645.97	1490.00	156.0	551.5				
	203	1490.00	1441.00	49.0	413.2				
	490	1441.00	1395.00	46.0	1,599.2				
HV87	1125	1450.00	1405.27	44.7	5,642.0	9,758	**0.079**	100	315.11
	461	1487.00	1450.00	37.0	1,627.2				
	696	1585.00	1487.00	98.0	1,854.8				
	454	1818.14	1585.00	233.1	633.5				
HV93	1460	1395.00	1362.00	33.0	9,711.2	16,519	**0.046**	100	263.53
	687	1423.00	1395.00	28.0	3,403.0				
	739	1506.00	1423.00	83.0	2,205.1				
	661	1706.49	1506.00	200.5	1,200.2				
HVLP	2612	1360.00	1340.89	19.1	30,537.2	52,053	**0.011**	100	163.30
	999	1375.00	1360.00	15.0	8,152.7				
	1142	1400.00	1375.00	25.0	7,718.4				
	803	1416.25	1400.00	16.3	5,644.8				
JM67	3442	1450.00	1420.00	30.0	36,868.5	53,205	**0.012**	100	170.07
	1576	1470.00	1450.00	20.0	13,990.1				
	560	1520.00	1470.00	50.0	1,874.1				
	254	1593.52	1520.00	73.5	472.1				

Kimley-Horn and Associates, Inc.

Project: *Glendale Stormwater Management Plan*
Subject: **Subbasin slope adjustments**
Model: **Glendale/Peoria**
Designed by: **ZRS** Date 1/18/2009 KHA Project No. 091910009
Checked by: **LAT** Date 1/19/2009 City of Glendale No. 089017

Objective: To average the subbasin slope for subbasins with varying slopes

Subbasin slope adjustments

Subbasin ID	ΔL_n (ft)	H_{up} (ft)	H_{down} (ft)	ΔH (ft)	$(\Delta L^3/\Delta H)^{1/2}$	G	Mean Slope (ft/ft)	Adjusted DSGE (ft)	Adjusted USGE (ft)
JM75	2569	1410.00	1375.00	35.0	22,009.6	46,837	**0.026**	100	296.50
	2014	1448.00	1410.00	38.0	14,662.1				
	1716	1528.00	1448.00	80.0	7,947.5				
	1255	1930.00	1528.00	402.0	2,217.4				
JM80	1173	1382.00	1378.00	4.0	20,087.1	32,973	**0.012**	100	142.73
	1819	1442.00	1382.00	60.0	10,015.5				
	494	1458.00	1442.00	16.0	2,744.9				
	109	1540.00	1458.00	82.0	125.7				
JMAF	1082	1287.00	1270.00	17.0	8,632.1	23,748	**0.035**	100	255.52
	1144	1320.00	1287.00	33.0	6,735.7				
	1201	1388.00	1320.00	68.0	5,047.3				
	1016	1482.42	1388.00	94.4	3,332.8				
JMLP	4295	1410.00	1373.94	36.1	46,874.0	61,274	**0.012**	100	177.80
	1124	1430.00	1410.00	20.0	8,426.3				
	750	1450.00	1430.00	20.0	4,592.8				
	466	1503.09	1450.00	53.1	1,380.6				
JMNR	1271	1366.00	1362.00	4.0	22,656.3	67,525	**0.006**	100	132.45
	1869	1376.00	1366.00	10.0	25,551.4				
	1822	1393.00	1376.00	17.0	18,862.4				
	327	1562.00	1393.00	169.0	454.9				
JMRS	3825	1386.00	1364.00	22.0	50,435.4	65,916	**0.013**	100	192.62
	2404	1463.00	1386.00	77.0	13,432.5				
	660	1606.00	1463.00	143.0	1,417.9				
	494	1910.00	1606.00	304.0	629.7				
LO51	8379	1303.00	1284.61	18.4	178,853.5	181,078	**0.003**	100	126.05
	417	1367.00	1303.00	64.0	1,064.4				
	388	1485.00	1367.00	118.0	703.6				
	304	1620.00	1485.00	135.0	456.2				
WL59	4352	1338.00	1312.85	25.2	57,248.5	103,103	**0.007**	100	161.50
	3440	1360.00	1338.00	22.0	43,015.6				
	529	1395.00	1360.00	35.0	2,056.6				
	358	1470.00	1395.00	75.0	782.2				
WWBR	1565	1439.00	1404.50	34.5	10,540.5	15,226	**0.050**	100	268.05
	594	1480.00	1439.00	41.0	2,260.9				
	524	1550.00	1480.00	70.0	1,433.7				
	707	1910.00	1550.00	360.0	990.8				
WWLP	1316	1465.00	1421.20	43.8	7,213.5	8,411	**0.058**	100	217.89
	212	1500.00	1465.00	35.0	521.8				
	160	1590.00	1500.00	90.0	213.3				
	340	1773.60	1590.00	183.6	462.7				

Project: ***Glendale Stormwater Management Plan***
Subject: **Subbasin slope adjustments**
Model: **Glendale/Peoria**
Designed by: **ZRS** Date 1/18/2009 KHA Project No. 091910009
Checked by: **LAT** Date 1/19/2009 City of Glendale No. 089017

Objective: To average the subbasin slope for subbasins with varying slopes

Subbasin slope adjustments

Subbasin ID	ΔL_n (ft)	H_{up} (ft)	H_{down} (ft)	ΔH (ft)	$(\Delta L^3/\Delta H)^{1/2}$	G	Mean Slope (ft/ft)	Adjusted DSGE (ft)	Adjusted USGE (ft)
WWRS	2709	1410.00	1388.06	21.9	30,102.0	35,934	**0.012**	100	149.97
	707	1436.00	1410.00	26.0	3,686.7				
	366	1460.00	1436.00	24.0	1,429.3				
	229	1483.44	1460.00	23.4	715.8				
YLLP	2842	1365.00	1337.94	27.1	29,125.4	53,709	**0.023**	100	281.44
	3222	1459.00	1365.00	94.0	18,863.6				
	713	1496.00	1459.00	37.0	3,129.9				
	1282	1810.00	1496.00	314.0	2,590.4				

Notes:
The Mean Slope calculation is based on the method described in the Standards Manual for Drainage Design and Floodplain Management in Tucson, Arizona, Revised July 1998.

Mean Slope = $(L_c / G)^2$

Where: L_c = the length of the hydraulically longest flowpath (ft)

$G = (\Delta L_1^3 / \Delta H_1)^{1/2} + (\Delta L_2^3 / \Delta H_2)^{1/2} + (\Delta L_3^3 / \Delta H_3)^{1/2} + (\Delta L_4^3 / \Delta H_4)^{1/2}$

Where: ΔL_n = segments of constant slope along L_c where the sum of the lengths equal L_c (ft)

ΔH_n = change in elevation corresponding to ΔL_n segments (ft)

Existing Subbasin Data

Area ID	Sub Basin Parameters: Area (sq mi)	Length (mi)	Slope (ft/mi)	Adj Slope	Time-Area	Kb	Rainfall Losses: IA (in)	DTHETA	PSIF (in)	XKSAT (in/hr)	RTIMP (%)		Return Period Parameters: 2 Yr	5 Yr	10 Yr	25 Yr	50 Yr	100 Yr
Major Basin ID: GP																		
83RS	0.638	0.91	149.4	149.4	Urban	0.085	0.18	0.30	4.50	0.30	38	Tc (Hrs)	0.677	0.677	0.655	0.593	0.554	0.520
												Vel (f/s)	1.97	1.97	2.04	2.25	2.41	2.57
												R (Hrs)	0.288	0.288	0.277	0.248	0.230	0.214
CL57	0.746	1.29	42.2	42.2	Urban	0.076	0.22	0.28	4.55	0.32	27	Tc (Hrs)	1.205*	1.205*	1.160*	1.039*	0.961*	0.896
												Vel (f/s)	1.57	1.57	1.63	1.82	1.97	2.11
												R (Hrs)	0.659	0.659	0.632	0.560	0.513	0.475
AC35	0.755	1.72	21.5	21.5	Urban	0.045	0.15	0.25	5.30	0.20	67	Tc (Hrs)	1.101*	1.101*	1.068*	0.980*	0.927*	0.882
												Vel (f/s)	2.29	2.29	2.36	2.57	2.72	2.86
												R (Hrs)	0.746	0.746	0.721	0.655	0.616	0.583
JM63	0.840	1.38	49.6	49.6	Urban	0.069	0.18	0.30	5.10	0.23	21	Tc (Hrs)	1.140*	1.140*	1.093*	0.962*	0.889	0.831
												Vel (f/s)	1.78	1.78	1.85	2.10	2.28	2.44
												R (Hrs)	0.611	0.611	0.584	0.507	0.464	0.431
AC43	0.362	1.80	22.9	22.9	Urban	0.078	0.23	0.25	4.35	0.35	37	Tc (Hrs)	1.500*	1.500*	1.500*	1.412*	1.324*	1.246*
												Vel (f/s)	1.76	1.76	1.76	1.87	1.99	2.12
												R (Hrs)	1.657	1.657	1.657	1.550	1.444	1.349
JM67	0.381	1.11	63.4	63.4	Urban	0.090	0.20	0.29	4.35	0.33	34	Tc (Hrs)	1.004*	1.004*	0.970*	0.879	0.823	0.774
												Vel (f/s)	1.62	1.62	1.68	1.85	1.98	2.10
												R (Hrs)	0.700	0.700	0.674	0.604	0.562	0.524
AC51	0.576	2.44	17.6	17.6	Urban	0.077	0.23	0.15	8.00	0.07	35	Tc (Hrs)	1.500*	1.500*	1.500*	1.500*	1.500*	1.461*
												Vel (f/s)	2.39	2.39	2.39	2.39	2.39	2.45
												R (Hrs)	1.622	1.622	1.622	1.622	1.622	1.575
PEAF	0.531	0.91	33.1	33.1	Urban	0.066	0.19	0.25	4.20	0.36	48	Tc (Hrs)	0.903	0.903	0.875	0.800	0.752	0.710
												Vel (f/s)	1.48	1.48	1.53	1.67	1.77	1.88
												R (Hrs)	0.440	0.440	0.425	0.384	0.359	0.337
AC59	0.742	2.56	16.5	16.5	Urban	0.065	0.18	0.15	8.00	0.08	38	Tc (Hrs)	1.500*	1.500*	1.500*	1.500*	1.483*	1.411*
												Vel (f/s)	2.50	2.50	2.50	2.50	2.53	2.66
												R (Hrs)	1.459	1.459	1.459	1.459	1.441	1.363

* Non default value or value out of range

Area ID	Sub Basin Parameters: Area (sq mi)	Length (mi)	Slope (ft/mi)	Adj Slope	Time-Area	Kb	Rainfall Losses: IA (in)	DTHETA	PSIF (in)	XKSAT (in/hr)	RTIMP (%)		Return Period Parameters: 2 Yr	5 Yr	10 Yr	25 Yr	50 Yr	100 Yr
Major Basin ID: GP																		
SK67	0.942	1.50	26.7	26.7	Urban	0.075	0.26	0.26	5.20	0.24	27	Tc (Hrs)	1.494*	1.494*	1.433*	1.266*	1.171*	1.095*
												Vel (f/s)	1.47	1.47	1.54	1.74	1.88	2.01
												R (Hrs)	0.827	0.827	0.789	0.688	0.631	0.586
AC67	0.698	2.31	17.6	17.6	Urban	0.069	0.22	0.15	8.40	0.07	29	Tc (Hrs)	1.500*	1.500*	1.500*	1.500*	1.428*	1.358*
												Vel (f/s)	2.26	2.26	2.26	2.26	2.37	2.49
												R (Hrs)	1.392	1.392	1.392	1.392	1.318	1.246
UH67	0.784	1.86	24.5	24.5	Urban	0.059	0.23	0.26	5.80	0.17	40	Tc (Hrs)	1.370*	1.370*	1.320*	1.188*	1.113*	1.051*
												Vel (f/s)	1.99	1.99	2.07	2.30	2.45	2.60
												R (Hrs)	0.990	0.990	0.950	0.846	0.786	0.738
AC75	0.842	2.31	19.6	19.6	Urban	0.064	0.21	0.26	5.80	0.18	28	Tc (Hrs)	1.500*	1.500*	1.500*	1.500*	1.422*	1.338*
												Vel (f/s)	2.26	2.26	2.26	2.26	2.38	2.53
												R (Hrs)	1.251	1.251	1.251	1.251	1.179	1.102
UH97	0.272	1.21	22.1	22.1	Urban	0.076	0.21	0.25	5.60	0.22	28	Tc (Hrs)	1.324*	1.324*	1.277*	1.151*	1.072*	1.007*
												Vel (f/s)	1.34	1.34	1.39	1.54	1.66	1.76
												R (Hrs)	1.236	1.236	1.187	1.058	0.978	0.912
AF11	0.375	0.83	17.1	17.1	Urban	0.033	0.14	0.29	3.07	0.74	70	Tc (Hrs)	0.702	0.702	0.682	0.628	0.596	0.567
												Vel (f/s)	1.73	1.73	1.78	1.94	2.04	2.15
												R (Hrs)	0.376	0.376	0.364	0.333	0.314	0.297
UHSK	0.933	1.89	35.7	35.7	Urban	0.070	0.22	0.28	5.00	0.24	26	Tc (Hrs)	1.478*	1.478*	1.417*	1.251*	1.157*	1.083*
												Vel (f/s)	1.88	1.88	1.96	2.22	2.40	2.56
												R (Hrs)	0.988	0.988	0.943	0.821	0.753	0.700
BL15	0.962	1.42	28.8	28.8	Urban	0.066	0.24	0.27	4.60	0.32	24	Tc (Hrs)	1.383*	1.383*	1.329*	1.174*	1.079*	1.003*
												Vel (f/s)	1.51	1.51	1.57	1.77	1.93	2.08
												R (Hrs)	0.718	0.718	0.687	0.599	0.545	0.503
WL67	0.103	0.75	29.3	29.3	Urban	0.105	0.24	0.28	4.70	0.34	6	Tc (Hrs)	1.305*	1.305*	1.246*	1.100*	1.017*	0.943*
												Vel (f/s)	0.84	0.84	0.88	1.00	1.08	1.17
												R (Hrs)	1.444	1.444	1.371	1.194	1.094	1.006

* Non default value or value out of range

Area ID	Sub Basin Parameters: Area (sq mi)	Length (mi)	Slope (ft/mi)	Adj Slope	Time-Area	Kb	Rainfall Losses: IA (in)	DTHETA	PSIF (in)	XKSAT (in/hr)	RTIMP (%)		Return Period Parameters: 2 Yr	5 Yr	10 Yr	25 Yr	50 Yr	100 Yr
Major Basin ID: GP																		
BL35	1.139	2.09	21.1	21.1	Urban	0.066	0.22	0.15	7.30	0.09	42	Tc (Hrs)	1.500*	1.500*	1.475*	1.348*	1.274*	1.212*
												Vel (f/s)	2.04	2.04	2.08	2.27	2.41	2.53
												R (Hrs)	0.972	0.972	0.954	0.863	0.811	0.767
BL43	1.049	2.04	20.1	20.1	Urban	0.076	0.24	0.15	8.00	0.07	33	Tc (Hrs)	1.500*	1.500*	1.500*	1.454*	1.374*	1.306*
												Vel (f/s)	1.99	1.99	1.99	2.06	2.18	2.29
												R (Hrs)	0.999	0.999	0.999	0.965	0.906	0.857
BL51	1.045	2.05	19.7	19.7	Urban	0.067	0.22	0.19	6.60	0.14	31	Tc (Hrs)	1.500*	1.500*	1.500*	1.430*	1.341*	1.267*
												Vel (f/s)	2.00	2.00	2.00	2.10	2.24	2.37
												R (Hrs)	1.005	1.005	1.005	0.953	0.888	0.834
BL59	1.075	2.07	18.1	18.1	Urban	0.061	0.23	0.18	6.80	0.12	38	Tc (Hrs)	1.500*	1.500*	1.500*	1.379*	1.297*	1.230*
												Vel (f/s)	2.02	2.02	2.02	2.20	2.34	2.47
												R (Hrs)	0.997	0.997	0.997	0.908	0.848	0.799
BL67	0.233	1.20	19.7	19.7	Urban	0.056	0.19	0.26	6.20	0.15	45	Tc (Hrs)	1.087*	1.087*	1.052*	0.955*	0.899	0.852
												Vel (f/s)	1.62	1.62	1.67	1.84	1.96	2.07
												R (Hrs)	1.077	1.077	1.039	0.934	0.872	0.822
BL75	1.063	2.01	25.7	25.7	Urban	0.069	0.24	0.26	5.20	0.24	30	Tc (Hrs)	1.500*	1.500*	1.500*	1.412*	1.309*	1.226*
												Vel (f/s)	1.97	1.97	1.97	2.09	2.25	2.40
												R (Hrs)	0.980	0.980	0.980	0.916	0.842	0.783
BL91	0.901	1.38	17.6	17.6	Urban	0.059	0.19	0.16	7.00	0.10	51	Tc (Hrs)	1.209*	1.209*	1.173*	1.076*	1.018*	0.970*
												Vel (f/s)	1.67	1.67	1.73	1.88	1.99	2.09
												R (Hrs)	0.627	0.627	0.606	0.551	0.518	0.491
BL99	1.133	1.60	17.5	17.5	Urban	0.066	0.22	0.21	6.40	0.14	36	Tc (Hrs)	1.497*	1.497*	1.441*	1.300*	1.220*	1.153*
												Vel (f/s)	1.57	1.57	1.63	1.81	1.92	2.04
												R (Hrs)	0.785	0.785	0.753	0.671	0.626	0.588
BLAF	0.283	1.46	11.9	11.9	Urban	0.081	0.17	0.29	3.55	0.52	16	Tc (Hrs)	1.500*	1.500*	1.500*	1.500*	1.500*	1.500*
												Vel (f/s)	1.43	1.43	1.43	1.43	1.43	1.43
												R (Hrs)	1.613	1.613	1.613	1.613	1.613	1.613

* Non default value or value out of range

Area ID	Sub Basin Parameters: Area (sq mi)	Length (mi)	Slope (ft/mi)	Adj Slope	Time-Area	Kb	Rainfall Losses: IA (in)	DTHETA	PSIF (in)	XKSAT (in/hr)	RTIMP (%)		Return Period Parameters: 2 Yr	5 Yr	10 Yr	25 Yr	50 Yr	100 Yr
Major Basin ID: GP																		
BLLO	0.765	1.75	17.2	17.2	Urban	0.053	0.18	0.25	4.35	0.34	55	Tc (Hrs)	1.369*	1.369*	1.327*	1.212*	1.138*	1.076*
												Vel (f/s)	1.87	1.87	1.93	2.12	2.26	2.39
												R (Hrs)	0.956	0.956	0.923	0.835	0.779	0.732
BLNR	0.603	1.45	24.5	24.5	Urban	0.061	0.18	0.27	5.20	0.21	44	Tc (Hrs)	1.202*	1.202*	1.164*	1.054*	0.988*	0.934*
												Vel (f/s)	1.77	1.77	1.83	2.02	2.15	2.28
												R (Hrs)	0.815	0.815	0.786	0.704	0.656	0.616
BN99	1.037	1.39	16.9	16.9	Urban	0.068	0.21	0.25	6.00	0.17	34	Tc (Hrs)	1.476*	1.476*	1.418*	1.269*	1.186*	1.119*
												Vel (f/s)	1.38	1.38	1.44	1.61	1.72	1.82
												R (Hrs)	0.727	0.727	0.695	0.614	0.570	0.534
BY07	0.513	0.92	22.1	22.1	Urban	0.075	0.23	0.25	5.10	0.23	34	Tc (Hrs)	1.129*	1.129*	1.090*	0.987*	0.921*	0.867
												Vel (f/s)	1.20	1.20	1.24	1.37	1.47	1.56
												R (Hrs)	0.579	0.579	0.557	0.499	0.462	0.432
BY87	0.959	1.39	18.9	18.9	Urban	0.065	0.24	0.15	8.00	0.08	33	Tc (Hrs)	1.284*	1.284*	1.241*	1.130*	1.066*	1.013*
												Vel (f/s)	1.59	1.59	1.64	1.80	1.91	2.01
												R (Hrs)	0.651	0.651	0.627	0.565	0.529	0.500
BY91	0.501	0.81	37.5	37.5	Urban	0.081	0.23	0.25	4.50	0.34	27	Tc (Hrs)	0.982*	0.982*	0.947*	0.854	0.797	0.747
												Vel (f/s)	1.21	1.21	1.25	1.39	1.49	1.59
												R (Hrs)	0.454	0.454	0.436	0.389	0.361	0.335
BYAF	0.609	1.83	30.5	30.5	Urban	0.056	0.23	0.28	4.70	0.27	24	Tc (Hrs)	1.325*	1.325*	1.275*	1.143*	1.058*	0.989*
												Vel (f/s)	2.03	2.03	2.11	2.35	2.54	2.71
												R (Hrs)	1.088	1.088	1.043	0.923	0.848	0.786
BYNR	1.034	1.58	26.6	26.6	Urban	0.076	0.22	0.27	5.80	0.17	27	Tc (Hrs)	1.494*	1.494*	1.430*	1.270*	1.182*	1.112*
												Vel (f/s)	1.55	1.55	1.62	1.82	1.96	2.08
												R (Hrs)	0.817	0.817	0.779	0.682	0.630	0.589
CL07	0.524	1.42	57.5	57.5	Urban	0.076	0.19	0.31	4.55	0.29	17	Tc (Hrs)	1.148*	1.148*	1.104*	0.987*	0.915	0.852
												Vel (f/s)	1.81	1.81	1.89	2.11	2.28	2.44
												R (Hrs)	0.825	0.825	0.790	0.697	0.641	0.593

* Non default value or value out of range

Area ID	Sub Basin Parameters: Area (sq mi)	Length (mi)	Slope (ft/mi)	Adj Slope	Time-Area	Kb	Rainfall Losses: IA (in)	DTHETA	PSIF (in)	XKSAT (in/hr)	RTIMP (%)		Return Period Parameters: 2 Yr	5 Yr	10 Yr	25 Yr	50 Yr	100 Yr
Major Basin ID: GP																		
CL67	0.275	1.29	47.3	47.3	Urban	0.087	0.22	0.27	4.40	0.38	23	Tc (Hrs)	1.233*	1.233*	1.186*	1.065*	0.993*	0.931*
												Vel (f/s)	1.53	1.53	1.60	1.78	1.91	2.03
												R (Hrs)	1.194	1.194	1.144	1.016	0.940	0.874
CL77	0.316	0.89	76.3	76.3	Urban	0.078	0.24	0.31	4.40	0.34	6	Tc (Hrs)	0.912	0.912	0.870	0.767	0.709	0.658
												Vel (f/s)	1.43	1.43	1.50	1.70	1.84	1.98
												R (Hrs)	0.587	0.587	0.557	0.484	0.444	0.408
CLAF	0.289	0.91	47.6	47.6	NATURAL	0.075	0.18	0.35	3.95	0.40		Tc (Hrs)	1.109*	1.109*	1.051*	0.919*	0.844	0.782
												Vel (f/s)	1.20	1.20	1.27	1.45	1.58	1.71
												R (Hrs)	0.781	0.781	0.736	0.634	0.577	0.530
CT35	0.976	1.97	12.4	12.4	Urban	0.059	0.21	0.25	5.20	0.21	47	Tc (Hrs)	1.500*	1.500*	1.500*	1.500*	1.420*	1.343*
												Vel (f/s)	1.93	1.93	1.93	1.93	2.03	2.15
												R (Hrs)	1.012	1.012	1.012	1.012	0.952	0.895
CT43	0.996	2.00	17.3	17.3	Urban	0.070	0.23	0.15	8.00	0.07	37	Tc (Hrs)	1.500*	1.500*	1.500*	1.436*	1.358*	1.292*
												Vel (f/s)	1.96	1.96	1.96	2.04	2.16	2.27
												R (Hrs)	1.013	1.013	1.013	0.965	0.907	0.858
CT51	0.988	1.99	16.5	16.5	Urban	0.055	0.24	0.26	6.40	0.13	32	Tc (Hrs)	1.500*	1.500*	1.500*	1.356*	1.268*	1.197*
												Vel (f/s)	1.95	1.95	1.95	2.15	2.30	2.44
												R (Hrs)	1.013	1.013	1.013	0.906	0.841	0.789
DV07	0.645	1.35	41.8	41.8	Urban	0.085	0.25	0.25	4.65	0.29	27	Tc (Hrs)	1.275*	1.275*	1.228*	1.102*	1.021*	0.955*
												Vel (f/s)	1.55	1.55	1.61	1.80	1.94	2.07
												R (Hrs)	0.791	0.791	0.759	0.673	0.618	0.574
DV56	0.287	0.73	80.2	80.2	NATURAL	0.090	0.10	0.33	4.65	0.27	38	Tc (Hrs)	0.736	0.736	0.711	0.647	0.606	0.571
												Vel (f/s)	1.45	1.45	1.51	1.65	1.77	1.88
												R (Hrs)	0.417	0.417	0.401	0.361	0.336	0.314
DV67	0.503	0.73	196.0	196.0	Urban	0.081	0.18	0.29	4.55	0.32	38	Tc (Hrs)	0.535	0.535	0.518	0.470	0.441	0.415
												Vel (f/s)	2.00	2.00	2.07	2.28	2.43	2.58
												R (Hrs)	0.213	0.213	0.205	0.184	0.172	0.160

* Non default value or value out of range

Area ID	Sub Basin Parameters: Area (sq mi)	Length (mi)	Slope (ft/mi)	Adj Slope	Time-Area	Kb	Rainfall Losses: IA (in)	DTHETA	PSIF (in)	XKSAT (in/hr)	RTIMP (%)		Return Period Parameters: 2 Yr	5 Yr	10 Yr	25 Yr	50 Yr	100 Yr
Major Basin ID: GP																		
DV75	0.501	1.48	25.8	25.8	Urban	0.078	0.24	0.25	4.90	0.26	34	Tc (Hrs)	1.402*	1.402*	1.354*	1.227*	1.146*	1.077*
												Vel (f/s)	1.55	1.55	1.60	1.77	1.89	2.02
												R (Hrs)	1.092	1.092	1.051	0.942	0.873	0.815
DV83	0.107	0.80	17.4	17.4	Urban	0.104	0.25	0.10	11.20	0.02	30	Tc (Hrs)	1.175*	1.175*	1.142*	1.055*	1.002*	0.956*
												Vel (f/s)	1.00	1.00	1.03	1.11	1.17	1.23
												R (Hrs)	1.324	1.324	1.282	1.174	1.109	1.052
DV87	1.004	1.01	33.2	33.2	Urban	0.080	0.30	0.17	6.80	0.13	15	Tc (Hrs)	1.132*	1.132*	1.083*	0.961*	0.895	0.841
												Vel (f/s)	1.31	1.31	1.37	1.54	1.66	1.76
												R (Hrs)	0.427	0.427	0.406	0.356	0.329	0.307
DV99	1.217	1.10	33.1	33.1	NATURAL	0.073	0.12	0.34	4.40	0.32	4	Tc (Hrs)	1.460*	1.460*	1.379*	1.156*	1.037*	0.951*
												Vel (f/s)	1.11	1.11	1.17	1.40	1.56	1.70
												R (Hrs)	0.543	0.543	0.510	0.419	0.372	0.338
DVAF	0.412	0.97	50.3	50.3	Urban	0.089	0.15	0.34	5.60	0.18	9	Tc (Hrs)	1.061*	1.061*	1.019*	0.904	0.834	0.779
												Vel (f/s)	1.34	1.34	1.40	1.57	1.71	1.83
												R (Hrs)	0.639	0.639	0.611	0.535	0.489	0.454
DVLP	0.136	1.05	31.5	31.5	NATURAL	0.088	0.12	0.32	4.45	0.31	21	Tc (Hrs)	1.250*	1.250*	1.204*	1.082*	1.007*	0.941*
												Vel (f/s)	1.23	1.23	1.28	1.42	1.53	1.64
												R (Hrs)	1.537	1.537	1.475	1.309	1.209	1.122
DVNR	0.401	1.11	18.1	18.1	Urban	0.083	0.23	0.26	4.35	0.34	33	Tc (Hrs)	1.424*	1.424*	1.376*	1.246*	1.167*	1.095*
												Vel (f/s)	1.14	1.14	1.18	1.31	1.40	1.49
												R (Hrs)	1.003	1.003	0.965	0.864	0.804	0.749
DW07	0.484	1.29	7.8	7.8	Urban	0.062	0.19	0.19	6.60	0.16	28	Tc (Hrs)	1.500*	1.500*	1.500*	1.422*	1.332*	1.258*
												Vel (f/s)	1.26	1.26	1.26	1.33	1.42	1.50
												R (Hrs)	1.076	1.076	1.076	1.014	0.943	0.885
DW99	0.155	0.85	18.9	18.9	Urban	0.068	0.18	0.16	7.00	0.12	35	Tc (Hrs)	1.008*	1.008*	0.974*	0.888	0.836	0.794
												Vel (f/s)	1.24	1.24	1.28	1.40	1.49	1.57
												R (Hrs)	0.949	0.949	0.913	0.824	0.771	0.728

* Non default value or value out of range

Area ID	Sub Basin Parameters: Area (sq mi)	Length (mi)	Slope (ft/mi)	Adj Slope	Time-Area	Kb	Rainfall Losses: IA (in)	DTHETA	PSIF (in)	XKSAT (in/hr)	RTIMP (%)		Return Period Parameters: 2 Yr	5 Yr	10 Yr	25 Yr	50 Yr	100 Yr
Major Basin ID: GP																		
GHAF	0.563	1.42	15.4	15.4	NATURAL	0.078	0.10	0.34	3.03	0.76	9	Tc (Hrs)	1.500*	1.500*	1.500*	1.500*	1.500*	1.485*
												Vel (f/s)	1.39	1.39	1.39	1.39	1.39	1.40
												R (Hrs)	1.066	1.066	1.066	1.066	1.066	1.054
GHNR	0.841	1.80	12.9	12.9	Urban	0.042	0.16	0.30	3.71	0.47	32	Tc (Hrs)	1.500*	1.500*	1.474*	1.326*	1.236*	1.152*
												Vel (f/s)	1.76	1.76	1.79	1.99	2.14	2.29
												R (Hrs)	1.025	1.025	1.005	0.894	0.827	0.765
GL03	0.649	1.43	33.7	33.7	Urban	0.070	0.17	0.30	4.10	0.38	41	Tc (Hrs)	1.220*	1.220*	1.180*	1.072*	1.005*	0.944*
												Vel (f/s)	1.72	1.72	1.78	1.96	2.09	2.22
												R (Hrs)	0.786	0.786	0.757	0.681	0.634	0.591
GL11	0.426	1.01	22.1	22.1	Urban	0.086	0.19	0.26	4.35	0.33	57	Tc (Hrs)	1.196*	1.196*	1.161*	1.065*	1.005*	0.952*
												Vel (f/s)	1.24	1.24	1.28	1.39	1.47	1.56
												R (Hrs)	0.740	0.740	0.716	0.651	0.610	0.575
GL14	0.481	1.41	13.1	13.1	Urban	0.046	0.30	0.35	3.81	0.44	1	Tc (Hrs)	1.500*	1.500*	1.500*	1.362*	1.249*	1.156*
												Vel (f/s)	1.38	1.38	1.38	1.52	1.66	1.79
												R (Hrs)	1.159	1.159	1.159	1.042	0.946	0.868
GLAF	0.388	1.63	11.3	11.3	Urban	0.029	0.18	0.29	3.07	0.74	65	Tc (Hrs)	1.067*	1.067*	1.035*	0.951*	0.901	0.856
												Vel (f/s)	2.24	2.24	2.31	2.51	2.65	2.79
												R (Hrs)	1.008	1.008	0.975	0.887	0.835	0.790
GLGH	0.079	0.49	37.3	37.3	NATURAL	0.057	0.30	0.35	4.40	0.32	16	Tc (Hrs)	0.691	0.691	0.660	0.587	0.545	0.508
												Vel (f/s)	1.04	1.04	1.09	1.22	1.32	1.41
												R (Hrs)	0.589	0.589	0.560	0.492	0.453	0.419
GR99	1.309	2.66	15.1	15.1	Urban	0.065	0.20	0.17	6.80	0.12	41	Tc (Hrs)	1.500*	1.500*	1.500*	1.500*	1.500*	1.500*
												Vel (f/s)	2.60	2.60	2.60	2.60	2.60	2.60
												R (Hrs)	1.089	1.089	1.089	1.089	1.089	1.089
GRAF	0.859	2.15	27.5	27.5	Urban	0.074	0.21	0.17	7.00	0.11	34	Tc (Hrs)	1.500*	1.500*	1.483*	1.348*	1.269*	1.204*
												Vel (f/s)	2.10	2.10	2.13	2.34	2.48	2.62
												R (Hrs)	1.167	1.167	1.153	1.037	0.969	0.915

* Non default value or value out of range

Area ID	Sub Basin Parameters: Area (sq mi)	Length (mi)	Slope (ft/mi)	Adj Slope	Time-Area	Kb	Rainfall Losses: IA (in)	DTHETA	PSIF (in)	XKSAT (in/hr)	RTIMP (%)		Return Period Parameters: 2 Yr	5 Yr	10 Yr	25 Yr	50 Yr	100 Yr
Major Basin ID: GP																		
GRNR	0.947	1.36	24.1	24.1	Urban	0.060	0.20	0.29	5.00	0.23	33	Tc (Hrs)	1.263*	1.263*	1.214*	1.080*	1.005*	0.944*
												Vel (f/s)	1.58	1.58	1.64	1.85	1.98	2.11
												R (Hrs)	0.633	0.633	0.606	0.532	0.491	0.458
GW35	1.008	1.98	10.9	10.9	Urban	0.058	0.21	0.17	6.80	0.12	45	Tc (Hrs)	1.500*	1.500*	1.500*	1.500*	1.427*	1.356*
												Vel (f/s)	1.94	1.94	1.94	1.94	2.04	2.14
												R (Hrs)	0.998	0.998	0.998	0.998	0.944	0.892
GW43	0.987	2.00	19.9	19.9	Urban	0.066	0.24	0.19	6.60	0.13	36	Tc (Hrs)	1.500*	1.500*	1.500*	1.380*	1.296*	1.226*
												Vel (f/s)	1.96	1.96	1.96	2.13	2.26	2.39
												R (Hrs)	1.018	1.018	1.018	0.928	0.866	0.814
GW51	0.962	1.97	20.1	20.1	Urban	0.074	0.26	0.21	6.40	0.17	21	Tc (Hrs)	1.500*	1.500*	1.500*	1.500*	1.423*	1.336*
												Vel (f/s)	1.93	1.93	1.93	1.93	2.03	2.16
												R (Hrs)	1.021	1.021	1.021	1.021	0.962	0.898
GW59	0.944	1.96	18.5	18.5	Urban	0.071	0.21	0.16	7.30	0.10	40	Tc (Hrs)	1.500*	1.500*	1.500*	1.412*	1.333*	1.267*
												Vel (f/s)	1.92	1.92	1.92	2.04	2.16	2.27
												R (Hrs)	1.027	1.027	1.027	0.961	0.901	0.852
GW67	0.892	1.90	17.3	17.3	Urban	0.066	0.24	0.16	8.40	0.06	35	Tc (Hrs)	1.500*	1.500*	1.479*	1.351*	1.277*	1.215*
												Vel (f/s)	1.86	1.86	1.88	2.06	2.18	2.29
												R (Hrs)	1.035	1.035	1.019	0.922	0.866	0.819
GW91	0.477	1.03	20.5	20.5	Urban	0.067	0.20	0.25	5.60	0.19	42	Tc (Hrs)	1.111*	1.111*	1.076*	0.976*	0.916	0.866
												Vel (f/s)	1.36	1.36	1.40	1.55	1.65	1.74
												R (Hrs)	0.649	0.649	0.626	0.562	0.524	0.492
GWLO	0.814	1.73	29.5	29.5	Urban	0.025	0.10	0.25	4.20	0.43	59	Tc (Hrs)	0.777	0.777	0.754	0.691	0.650	0.615
												Vel (f/s)	3.27	3.27	3.37	3.67	3.90	4.13
												R (Hrs)	0.487	0.487	0.471	0.428	0.400	0.376
GWNR	0.696	1.62	23.7	23.7	Urban	0.066	0.18	0.27	4.65	0.29	32	Tc (Hrs)	1.436*	1.436*	1.384*	1.245*	1.157*	1.085*
												Vel (f/s)	1.65	1.65	1.72	1.91	2.05	2.19
												R (Hrs)	1.000	1.000	0.960	0.854	0.786	0.733

* Non default value or value out of range

Area ID	Sub Basin Parameters: Area (sq mi)	Length (mi)	Slope (ft/mi)	Adj Slope	Time-Area	Kb	Rainfall Losses: IA (in)	DTHETA	PSIF (in)	XKSAT (in/hr)	RTIMP (%)		Return Period Parameters: 2 Yr	5 Yr	10 Yr	25 Yr	50 Yr	100 Yr
Major Basin ID: GP																		
HV01	0.444	1.09	49.3	49.3	Urban	0.066	0.15	0.30	5.30	0.20	35	Tc (Hrs)	0.885	0.885	0.856	0.774	0.724	0.683
												Vel (f/s)	1.81	1.81	1.87	2.07	2.21	2.34
												R (Hrs)	0.550	0.550	0.530	0.474	0.440	0.412
HV07	0.304	0.62	138.0	138.0	Urban	0.063	0.28	0.32	3.92	0.41	11	Tc (Hrs)	0.570	0.570	0.542	0.479	0.443	0.413
												Vel (f/s)	1.60	1.60	1.68	1.90	2.05	2.20
												R (Hrs)	0.267	0.267	0.252	0.220	0.201	0.186
HV55	2.054	2.62	66.6	66.6	Urban	0.067	0.20	0.30	4.40	0.32	29	Tc (Hrs)	1.500*	1.500*	1.475*	1.278*	1.172*	1.090*
												Vel (f/s)	2.56	2.56	2.61	3.01	3.28	3.53
												R (Hrs)	0.832	0.832	0.816	0.696	0.632	0.584
HV67	0.544	1.24	136.3	136.3	Urban	0.083	0.16	0.30	4.20	0.36	57	Tc (Hrs)	0.748	0.748	0.726	0.667	0.629	0.596
												Vel (f/s)	2.43	2.43	2.51	2.73	2.89	3.05
												R (Hrs)	0.451	0.451	0.436	0.396	0.372	0.350
HV75	0.958	1.62	44.9	44.9	Urban	0.077	0.24	0.26	4.10	0.40	26	Tc (Hrs)	1.400*	1.400*	1.345*	1.199*	1.103*	1.024*
												Vel (f/s)	1.70	1.70	1.77	1.98	2.15	2.32
												R (Hrs)	0.811	0.811	0.775	0.682	0.622	0.573
HV83	0.035	0.38	366.8	281.8	Urban	0.116	0.10	0.35	4.15	0.37	20	Tc (Hrs)	0.451	0.451	0.434	0.389	0.362	0.339
												Vel (f/s)	1.24	1.24	1.28	1.43	1.54	1.64
												R (Hrs)	0.476	0.476	0.456	0.404	0.373	0.347
HV87	0.285	0.52	415.3	291.2	NATURAL	0.093	0.10	0.35	4.00	0.39	35	Tc (Hrs)	0.438	0.438	0.424	0.384	0.360	0.339
												Vel (f/s)	1.74	1.74	1.80	1.99	2.12	2.25
												R (Hrs)	0.180	0.180	0.173	0.155	0.144	0.135
HV93	0.172	0.67	243.3	235.6	Urban	0.099	0.24	0.28	4.15	0.42	30	Tc (Hrs)	0.566	0.566	0.545	0.492	0.460	0.433
												Vel (f/s)	1.74	1.74	1.80	2.00	2.14	2.27
												R (Hrs)	0.390	0.390	0.374	0.333	0.310	0.289
HVAF	0.215	0.45	52.2	52.2	Urban	0.051	0.30	0.35	3.92	0.41		Tc (Hrs)	0.651	0.651	0.611	0.526	0.482	0.446
												Vel (f/s)	1.01	1.01	1.08	1.25	1.37	1.48
												R (Hrs)	0.291	0.291	0.271	0.230	0.208	0.191

* Non default value or value out of range

Area ID	Sub Basin Parameters: Area (sq mi)	Length (mi)	Slope (ft/mi)	Adj Slope	Time-Area	Kb	Rainfall Losses: IA (in)	DTHETA	PSIF (in)	XKSAT (in/hr)	RTIMP (%)		Return Period Parameters: 2 Yr	5 Yr	10 Yr	25 Yr	50 Yr	100 Yr
Major Basin ID: GP																		
HVLP	0.198	1.05	60.5	60.5	Urban	0.067	0.19	0.26	4.30	0.36	43	Tc (Hrs)	0.821	0.821	0.795	0.725	0.681	0.642
												Vel (f/s)	1.88	1.88	1.94	2.12	2.26	2.40
												R (Hrs)	0.778	0.778	0.751	0.677	0.632	0.593
HVNR	0.202	1.15	33.2	33.2	NATURAL	0.097	0.10	0.35	3.48	0.55		Tc (Hrs)	1.500*	1.500*	1.500*	1.363*	1.249*	1.157*
												Vel (f/s)	1.12	1.12	1.12	1.24	1.35	1.46
												R (Hrs)	1.615	1.615	1.615	1.452	1.317	1.210
HVRS	0.630	1.45	37.3	37.3	NATURAL	0.085	0.10	0.35	4.10	0.38	1	Tc (Hrs)	1.500*	1.500*	1.500*	1.348*	1.234*	1.135*
												Vel (f/s)	1.42	1.42	1.42	1.58	1.72	1.87
												R (Hrs)	1.017	1.017	1.017	0.903	0.819	0.746
JM75	1.112	1.43	137.4	137.4	NATURAL	0.079	0.11	0.34	4.30	0.34	12	Tc (Hrs)	1.038*	1.038*	0.989*	0.854	0.773	0.713
												Vel (f/s)	2.02	2.02	2.12	2.46	2.71	2.94
												R (Hrs)	0.483	0.483	0.458	0.389	0.348	0.318
JM76	0.169	0.82	41.6	41.6	Urban	0.064	0.25	0.35	3.92	0.41		Tc (Hrs)	1.038*	1.038*	0.979*	0.850	0.778	0.721
												Vel (f/s)	1.16	1.16	1.23	1.41	1.55	1.67
												R (Hrs)	0.907	0.907	0.849	0.726	0.659	0.605
JM80	0.164	0.68	62.7	62.7	Urban	0.066	0.24	0.35	3.88	0.42	5	Tc (Hrs)	0.816	0.816	0.773	0.677	0.622	0.578
												Vel (f/s)	1.22	1.22	1.29	1.47	1.60	1.73
												R (Hrs)	0.608	0.608	0.572	0.494	0.450	0.415
JM99	0.568	1.10	43.0	43.0	Urban	0.079	0.23	0.16	10.10	0.03	21	Tc (Hrs)	0.934*	0.934*	0.904	0.829	0.786	0.748
												Vel (f/s)	1.73	1.73	1.78	1.95	2.05	2.16
												R (Hrs)	0.511	0.511	0.493	0.448	0.422	0.399
JMAF	0.147	0.84	184.9	184.9	NATURAL	0.079	0.19	0.35	4.90	0.24	5	Tc (Hrs)	0.653	0.653	0.625	0.553	0.509	0.472
												Vel (f/s)	1.89	1.89	1.97	2.23	2.42	2.61
												R (Hrs)	0.598	0.598	0.570	0.498	0.454	0.417
JMLP	0.705	1.26	61.9	61.9	Urban	0.084	0.22	0.28	6.00	0.16	27	Tc (Hrs)	1.053*	1.053*	1.011*	0.902	0.840	0.790
												Vel (f/s)	1.75	1.75	1.83	2.05	2.20	2.34
												R (Hrs)	0.576	0.576	0.550	0.484	0.448	0.419

* Non default value or value out of range

Area ID	Sub Basin Parameters: Area (sq mi)	Length (mi)	Slope (ft/mi)	Adj Slope	Time-Area	Kb	Rainfall Losses: IA (in)	DTHETA	PSIF (in)	XKSAT (in/hr)	RTIMP (%)		Return Period Parameters: 2 Yr	5 Yr	10 Yr	25 Yr	50 Yr	100 Yr
Major Basin ID: GP																		
JMNR	0.149	1.00	32.4	32.4	NATURAL	0.088	0.16	0.35	3.29	0.63	1	Tc (Hrs)	1.500*	1.500*	1.457*	1.244*	1.141*	1.054*
												Vel (f/s)	0.98	0.98	1.01	1.18	1.29	1.39
												R (Hrs)	1.718	1.718	1.663	1.396	1.268	1.161
JMRS	0.567	1.40	66.2	66.2	Urban	0.080	0.20	0.31	5.30	0.20	18	Tc (Hrs)	1.094*	1.094*	1.052*	0.937*	0.866	0.811
												Vel (f/s)	1.88	1.88	1.95	2.19	2.37	2.53
												R (Hrs)	0.740	0.740	0.708	0.622	0.571	0.530
LO51	1.130	1.80	14.5	14.5	Urban	0.065	0.14	0.25	4.25	0.35	44	Tc (Hrs)	1.500*	1.500*	1.500*	1.500*	1.410*	1.328*
												Vel (f/s)	1.76	1.76	1.76	1.76	1.87	1.99
												R (Hrs)	0.866	0.866	0.866	0.866	0.809	0.757
LO67	1.217	1.52	19.8	19.8	Urban	0.059	0.20	0.25	5.70	0.20	33	Tc (Hrs)	1.403*	1.403*	1.345*	1.198*	1.117*	1.051*
												Vel (f/s)	1.59	1.59	1.66	1.86	2.00	2.12
												R (Hrs)	0.674	0.674	0.643	0.565	0.523	0.489
LO75	0.970	1.42	23.7	23.7	Urban	0.074	0.24	0.25	6.00	0.16	34	Tc (Hrs)	1.397*	1.397*	1.342*	1.202*	1.123*	1.059*
												Vel (f/s)	1.49	1.49	1.55	1.73	1.85	1.97
												R (Hrs)	0.722	0.722	0.691	0.611	0.567	0.531
MEAF	1.369	1.86	42.8	42.8	Urban	0.061	0.17	0.28	4.65	0.30	22	Tc (Hrs)	1.397*	1.397*	1.330*	1.153*	1.058*	0.985*
												Vel (f/s)	1.95	1.95	2.05	2.37	2.58	2.77
												R (Hrs)	0.737	0.737	0.697	0.595	0.541	0.500
NO07	0.340	1.01	17.5	17.5	Urban	0.068	0.21	0.26	4.55	0.35	27	Tc (Hrs)	1.271*	1.271*	1.225*	1.105*	1.032*	0.967*
												Vel (f/s)	1.17	1.17	1.21	1.34	1.44	1.53
												R (Hrs)	0.900	0.900	0.864	0.771	0.714	0.665
NO11	0.860	1.29	34.2	34.2	Urban	0.049	0.19	0.26	3.95	0.40	49	Tc (Hrs)	0.947*	0.947*	0.917*	0.835	0.782	0.736
												Vel (f/s)	2.00	2.00	2.06	2.27	2.42	2.57
												R (Hrs)	0.465	0.465	0.449	0.405	0.376	0.352
NO99	0.858	1.62	10.4	10.4	Urban	0.065	0.23	0.29	4.25	0.38	19	Tc (Hrs)	1.500*	1.500*	1.500*	1.500*	1.500*	1.500*
												Vel (f/s)	1.58	1.58	1.58	1.58	1.58	1.58
												R (Hrs)	0.932	0.932	0.932	0.932	0.932	0.932

* Non default value or value out of range

Area ID	Sub Basin Parameters: Area (sq mi)	Length (mi)	Slope (ft/mi)	Adj Slope	Time-Area	Kb	Rainfall Losses: IA (in)	DTHETA	PSIF (in)	XKSAT (in/hr)	RTIMP (%)		Return Period Parameters: 2 Yr	5 Yr	10 Yr	25 Yr	50 Yr	100 Yr
Major Basin ID: GP																		
NOAF	0.285	1.16	26.8	26.8	NATURAL	0.074	0.11	0.33	2.92	0.82	23	Tc (Hrs)	1.405*	1.405*	1.338*	1.182*	1.099*	1.031*
												Vel (f/s)	1.21	1.21	1.27	1.44	1.55	1.65
												R (Hrs)	1.243	1.243	1.177	1.026	0.947	0.881
NONR	0.830	2.01	13.0	13.0	Urban	0.064	0.27	0.15	7.60	0.10	34	Tc (Hrs)	1.500*	1.500*	1.500*	1.500*	1.431*	1.358*
												Vel (f/s)	1.97	1.97	1.97	1.97	2.06	2.17
												R (Hrs)	1.128	1.128	1.128	1.128	1.071	1.010
OL03	1.099	1.76	16.8	16.8	Urban	0.068	0.22	0.25	5.20	0.24	33	Tc (Hrs)	1.500*	1.500*	1.500*	1.477*	1.373*	1.289*
												Vel (f/s)	1.72	1.72	1.72	1.75	1.88	2.00
												R (Hrs)	0.864	0.864	0.864	0.850	0.783	0.731
OL11	0.339	0.82	26.3	26.3	Urban	0.086	0.23	0.27	4.25	0.40	21	Tc (Hrs)	1.190*	1.190*	1.143*	1.024*	0.954*	0.894
												Vel (f/s)	1.01	1.01	1.05	1.17	1.26	1.35
												R (Hrs)	0.709	0.709	0.678	0.601	0.555	0.516
OL99	0.436	1.47	29.4	29.4	Urban	0.080	0.21	0.28	4.25	0.36	28	Tc (Hrs)	1.420*	1.420*	1.369*	1.235*	1.155*	1.083*
												Vel (f/s)	1.52	1.52	1.57	1.75	1.87	1.99
												R (Hrs)	1.193	1.193	1.146	1.022	0.948	0.883
OLAF	1.026	1.98	27.8	27.8	Urban	0.078	0.18	0.30	3.60	0.50	19	Tc (Hrs)	1.500*	1.500*	1.500*	1.500*	1.500*	1.398*
												Vel (f/s)	1.94	1.94	1.94	1.94	1.94	2.08
												R (Hrs)	0.988	0.988	0.988	0.988	0.988	0.914
OLNR	0.696	1.81	14.1	14.1	Urban	0.078	0.24	0.19	6.80	0.11	34	Tc (Hrs)	1.500*	1.500*	1.500*	1.500*	1.467*	1.389*
												Vel (f/s)	1.77	1.77	1.77	1.77	1.81	1.91
												R (Hrs)	1.147	1.147	1.147	1.147	1.119	1.053
PE03	0.409	1.47	20.3	20.3	Urban	0.069	0.20	0.25	4.80	0.32	29	Tc (Hrs)	1.452*	1.452*	1.402*	1.266*	1.183*	1.108*
												Vel (f/s)	1.48	1.48	1.54	1.70	1.82	1.95
												R (Hrs)	1.268	1.268	1.219	1.089	1.010	0.940
PE07	0.575	1.76	14.9	14.9	Urban	0.059	0.18	0.25	5.30	0.27	23	Tc (Hrs)	1.500*	1.500*	1.500*	1.428*	1.323*	1.238*
												Vel (f/s)	1.72	1.72	1.72	1.81	1.95	2.09
												R (Hrs)	1.250	1.250	1.250	1.184	1.087	1.010

* Non default value or value out of range

Area ID	Sub Basin Parameters: Area (sq mi)	Length (mi)	Slope (ft/mi)	Adj Slope	Time-Area	Kb	Rainfall Losses: IA (in)	DTHETA	PSIF (in)	XKSAT (in/hr)	RTIMP (%)		Return Period Parameters: 2 Yr	5 Yr	10 Yr	25 Yr	50 Yr	100 Yr
Major Basin ID: GP																		
PE11	0.924	2.11	12.3	12.3	Urban	0.065	0.20	0.25	6.00	0.18	30	Tc (Hrs)	1.500*	1.500*	1.500*	1.500*	1.500*	1.490*
												Vel (f/s)	2.06	2.06	2.06	2.06	2.06	2.08
												R (Hrs)	1.103	1.103	1.103	1.103	1.103	1.095
PE35	0.977	1.98	6.7	6.7	Urban	0.068	0.23	0.24	4.70	0.27	40	Tc (Hrs)	1.500*	1.500*	1.500*	1.500*	1.500*	1.500*
												Vel (f/s)	1.94	1.94	1.94	1.94	1.94	1.94
												R (Hrs)	1.016	1.016	1.016	1.016	1.016	1.016
PE43	0.997	2.00	13.8	13.8	Urban	0.069	0.24	0.25	5.70	0.19	32	Tc (Hrs)	1.500*	1.500*	1.500*	1.500*	1.500*	1.452*
												Vel (f/s)	1.96	1.96	1.96	1.96	1.96	2.02
												R (Hrs)	1.012	1.012	1.012	1.012	1.012	0.976
PE97	0.560	1.61	29.0	29.0	Urban	0.068	0.18	0.26	4.65	0.31	29	Tc (Hrs)	1.359*	1.359*	1.311*	1.183*	1.102*	1.032*
												Vel (f/s)	1.74	1.74	1.80	2.00	2.14	2.29
												R (Hrs)	1.060	1.060	1.018	0.908	0.839	0.780
PE99	0.294	1.78	16.1	16.1	Urban	0.077	0.21	0.25	4.90	0.28	33	Tc (Hrs)	1.500*	1.500*	1.500*	1.500*	1.450*	1.362*
												Vel (f/s)	1.74	1.74	1.74	1.74	1.80	1.92
												R (Hrs)	1.849	1.849	1.849	1.849	1.781	1.662
PENR	0.197	0.72	8.3	8.3	Urban	0.097	0.10	0.28	4.70	0.26	59	Tc (Hrs)	1.431*	1.431*	1.389*	1.275*	1.204*	1.142*
												Vel (f/s)	0.74	0.74	0.76	0.83	0.88	0.92
												R (Hrs)	1.069	1.069	1.035	0.941	0.882	0.833
PP03	0.325	1.13	14.9	14.9	Urban	0.092	0.30	0.25	4.45	0.38	15	Tc (Hrs)	1.500*	1.500*	1.500*	1.500*	1.410*	1.316*
												Vel (f/s)	1.10	1.10	1.10	1.10	1.18	1.26
												R (Hrs)	1.214	1.214	1.214	1.214	1.134	1.050
PP07	0.195	0.77	66.5	66.5	Urban	0.097	0.21	0.31	5.30	0.22	8	Tc (Hrs)	0.931*	0.931*	0.892	0.792	0.729	0.678
												Vel (f/s)	1.21	1.21	1.27	1.43	1.55	1.67
												R (Hrs)	0.704	0.704	0.671	0.588	0.536	0.495
PP67	0.096	0.73	33.6	33.6	URBAN	0.105	0.30	0.25	4.55	0.41	6	Tc (Hrs)	1.277*	1.277*	1.212*	1.065*	0.981*	0.912
												Vel (f/s)	0.84	0.84	0.88	1.01	1.09	1.17
												R (Hrs)	1.434	1.434	1.354	1.173	1.071	0.988

* Non default value or value out of range

Area ID	Sub Basin Parameters: Area (sq mi)	Length (mi)	Slope (ft/mi)	Adj Slope	Time-Area	Kb	Rainfall Losses: IA (in)	DTHETA	PSIF (in)	XKSAT (in/hr)	RTIMP (%)		Return Period Parameters: 2 Yr	5 Yr	10 Yr	25 Yr	50 Yr	100 Yr
Major Basin ID: GP																		
PP73	0.545	1.26	40.0	40.0	Urban	0.086	0.29	0.25	4.70	0.31	18	Tc (Hrs)	1.302*	1.302*	1.251*	1.117*	1.036*	0.964*
												Vel (f/s)	1.42	1.42	1.48	1.65	1.78	1.92
												R (Hrs)	0.843	0.843	0.806	0.712	0.654	0.604
PP75	0.420	1.21	44.8	44.8	Urban	0.055	0.28	0.29	4.25	0.40	18	Tc (Hrs)	1.004*	1.004*	0.960*	0.856	0.795	0.743
												Vel (f/s)	1.77	1.77	1.85	2.07	2.23	2.39
												R (Hrs)	0.710	0.710	0.675	0.594	0.547	0.508
PP77	0.270	1.17	29.2	29.2	Urban	0.078	0.27	0.30	4.20	0.39	7	Tc (Hrs)	1.433*	1.433*	1.363*	1.200*	1.107*	1.030*
												Vel (f/s)	1.20	1.20	1.26	1.43	1.55	1.67
												R (Hrs)	1.319	1.319	1.248	1.084	0.991	0.914
PP81	0.197	0.57	36.4	36.4	Urban	0.097	0.30	0.25	6.00	0.18	15	Tc (Hrs)	0.926*	0.926*	0.890	0.791	0.731	0.684
												Vel (f/s)	0.90	0.90	0.94	1.06	1.14	1.22
												R (Hrs)	0.547	0.547	0.523	0.459	0.421	0.391
PP87	0.981	1.03	90.8	90.8	Urban	0.076	0.25	0.28	4.45	0.35	10	Tc (Hrs)	0.990*	0.990*	0.942*	0.818	0.739	0.679
												Vel (f/s)	1.53	1.53	1.60	1.85	2.04	2.22
												R (Hrs)	0.379	0.379	0.359	0.306	0.274	0.249
PP91	0.161	0.75	27.0	27.0	Urban	0.100	0.30	0.25	4.20	0.44	15	Tc (Hrs)	1.283*	1.283*	1.224*	1.088*	1.008*	0.942*
												Vel (f/s)	0.86	0.86	0.90	1.01	1.09	1.17
												R (Hrs)	1.097	1.097	1.042	0.914	0.840	0.779
PPAF	0.270	0.96	77.8	77.8	Urban	0.026	0.15	0.25	4.20	0.36	80	Tc (Hrs)	0.398	0.398	0.387	0.359	0.341	0.325
												Vel (f/s)	3.54	3.54	3.64	3.92	4.13	4.33
												R (Hrs)	0.271	0.271	0.264	0.242	0.229	0.217
PPLP	0.885	2.00	45.9	45.9	Urban	0.079	0.23	0.28	4.35	0.37	13	Tc (Hrs)	1.500*	1.500*	1.500*	1.408*	1.282*	1.180*
												Vel (f/s)	1.96	1.96	1.96	2.08	2.29	2.49
												R (Hrs)	1.083	1.083	1.083	1.010	0.910	0.830
PPNR	0.237	1.12	26.8	26.8	NATURAL	0.092	0.13	0.34	3.53	0.53	1	Tc (Hrs)	1.500*	1.500*	1.500*	1.385*	1.270*	1.177*
												Vel (f/s)	1.10	1.10	1.10	1.19	1.29	1.40
												R (Hrs)	1.444	1.444	1.444	1.321	1.200	1.103

* Non default value or value out of range

Area ID	Sub Basin Parameters: Area (sq mi)	Length (mi)	Slope (ft/mi)	Adj Slope	Time-Area	Kb	Rainfall Losses: IA (in)	DTHETA	PSIF (in)	XKSAT (in/hr)	RTIMP (%)		Return Period Parameters: 2 Yr	5 Yr	10 Yr	25 Yr	50 Yr	100 Yr
Major Basin ID: GP																		
RG07	0.350	1.09	16.0	16.0	Urban	0.058	0.28	0.32	4.55	0.29	7	Tc (Hrs)	1.383*	1.383*	1.321*	1.167*	1.079*	0.999*
												Vel (f/s)	1.16	1.16	1.21	1.37	1.48	1.60
												R (Hrs)	1.034	1.034	0.982	0.856	0.784	0.720
RG93	0.248	0.83	19.1	19.1	Urban	0.095	0.25	0.25	4.60	0.30	30	Tc (Hrs)	1.303*	1.303*	1.258*	1.137*	1.062*	0.995*
												Vel (f/s)	0.93	0.93	0.97	1.07	1.15	1.22
												R (Hrs)	0.947	0.947	0.911	0.814	0.754	0.702
RGAF	0.332	1.30	31.0	31.0	Urban	0.092	0.16	0.33	6.20	0.14	12	Tc (Hrs)	1.406*	1.406*	1.351*	1.197*	1.111*	1.043*
												Vel (f/s)	1.36	1.36	1.41	1.59	1.72	1.83
												R (Hrs)	1.249	1.249	1.195	1.045	0.962	0.897
RGLP	0.410	1.09	16.5	16.5	Urban	0.043	0.26	0.33	4.35	0.33	19	Tc (Hrs)	1.118*	1.118*	1.072*	0.958*	0.891	0.833
												Vel (f/s)	1.43	1.43	1.49	1.67	1.79	1.92
												R (Hrs)	0.746	0.746	0.712	0.628	0.580	0.538
RO99	0.414	1.52	12.0	12.0	Urban	0.076	0.20	0.22	4.70	0.26	38	Tc (Hrs)	1.500*	1.500*	1.500*	1.500*	1.421*	1.341*
												Vel (f/s)	1.49	1.49	1.49	1.49	1.57	1.66
												R (Hrs)	1.341	1.341	1.341	1.341	1.263	1.185
TB35	0.976	1.97	11.6	11.6	Urban	0.071	0.23	0.15	7.60	0.08	36	Tc (Hrs)	1.500*	1.500*	1.500*	1.500*	1.500*	1.465*
												Vel (f/s)	1.93	1.93	1.93	1.93	1.93	1.97
												R (Hrs)	1.012	1.012	1.012	1.012	1.012	0.986
TB43	0.995	2.00	19.0	19.0	Urban	0.078	0.26	0.15	7.30	0.10	25	Tc (Hrs)	1.500*	1.500*	1.500*	1.500*	1.427*	1.352*
												Vel (f/s)	1.96	1.96	1.96	1.96	2.06	2.17
												R (Hrs)	1.013	1.013	1.013	1.013	0.958	0.903
TB51	0.990	1.99	19.9	19.9	Urban	0.076	0.27	0.19	6.60	0.15	21	Tc (Hrs)	1.500*	1.500*	1.500*	1.500*	1.437*	1.352*
												Vel (f/s)	1.95	1.95	1.95	1.95	2.03	2.16
												R (Hrs)	1.012	1.012	1.012	1.012	0.965	0.902
TB59	0.995	2.00	15.6	15.6	Urban	0.061	0.25	0.25	6.20	0.15	34	Tc (Hrs)	1.500*	1.500*	1.500*	1.467*	1.371*	1.294*
												Vel (f/s)	1.96	1.96	1.96	2.00	2.14	2.27
												R (Hrs)	1.013	1.013	1.013	0.989	0.917	0.860

* Non default value or value out of range

Area ID	Sub Basin Parameters: Area (sq mi)	Length (mi)	Slope (ft/mi)	Adj Slope	Time-Area	Kb	Rainfall Losses: IA (in)	DTHETA	PSIF (in)	XKSAT (in/hr)	RTIMP (%)		Return Period Parameters: 2 Yr	5 Yr	10 Yr	25 Yr	50 Yr	100 Yr
Major Basin ID: GP																		
TB99	0.976	1.66	20.2	20.2	Urban	0.073	0.23	0.25	5.80	0.18	30	Tc (Hrs)	1.500*	1.500*	1.500*	1.377*	1.284*	1.208*
												Vel (f/s)	1.62	1.62	1.62	1.77	1.90	2.02
												R (Hrs)	0.883	0.883	0.883	0.803	0.742	0.694
TBNR	1.123	1.39	14.8	14.8	Urban	0.064	0.19	0.24	4.65	0.30	30	Tc (Hrs)	1.500*	1.500*	1.500*	1.350*	1.251*	1.172*
												Vel (f/s)	1.36	1.36	1.36	1.51	1.63	1.74
												R (Hrs)	0.707	0.707	0.707	0.629	0.578	0.538
TL07	0.580	1.58	25.0	25.0	Urban	0.068	0.21	0.25	5.00	0.29	27	Tc (Hrs)	1.425*	1.425*	1.374*	1.236*	1.148*	1.074*
												Vel (f/s)	1.63	1.63	1.69	1.87	2.02	2.16
												R (Hrs)	1.078	1.078	1.035	0.921	0.848	0.788
UH07	0.252	1.31	11.7	11.7	Urban	0.070	0.20	0.25	4.80	0.34	22	Tc (Hrs)	1.500*	1.500*	1.500*	1.465*	1.365*	1.276*
												Vel (f/s)	1.28	1.28	1.28	1.31	1.41	1.51
												R (Hrs)	1.580	1.580	1.580	1.539	1.423	1.320
UH15	1.019	1.53	25.2	25.2	Urban	0.056	0.28	0.31	5.80	0.17	18	Tc (Hrs)	1.367*	1.367*	1.300*	1.136*	1.046*	0.976*
												Vel (f/s)	1.64	1.64	1.73	1.98	2.15	2.30
												R (Hrs)	0.728	0.728	0.688	0.592	0.541	0.501
UH35	1.136	2.10	26.6	26.6	Urban	0.058	0.20	0.13	10.10	0.03	51	Tc (Hrs)	1.268*	1.268*	1.233*	1.141*	1.084*	1.034*
												Vel (f/s)	2.43	2.43	2.50	2.70	2.84	2.98
												R (Hrs)	0.811	0.811	0.786	0.721	0.681	0.647
UH43	1.025	2.00	21.3	21.3	Urban	0.076	0.26	0.17	7.30	0.11	17	Tc (Hrs)	1.500*	1.500*	1.500*	1.483*	1.386*	1.308*
												Vel (f/s)	1.96	1.96	1.96	1.98	2.12	2.24
												R (Hrs)	0.996	0.996	0.996	0.983	0.913	0.856
UH51	0.990	1.98	16.7	16.7	Urban	0.075	0.23	0.26	4.60	0.29	36	Tc (Hrs)	1.500*	1.500*	1.500*	1.500*	1.500*	1.445*
												Vel (f/s)	1.94	1.94	1.94	1.94	1.94	2.01
												R (Hrs)	1.008	1.008	1.008	1.008	1.008	0.967
UH75	0.814	1.75	2.7	2.7	Urban	0.064	0.22	0.15	7.30	0.11	29	Tc (Hrs)	1.500*	1.500*	1.500*	1.500*	1.500*	1.500*
												Vel (f/s)	1.71	1.71	1.71	1.71	1.71	1.71
												R (Hrs)	1.021	1.021	1.021	1.021	1.021	1.021

* Non default value or value out of range

Area ID	Sub Basin Parameters: Area (sq mi)	Length (mi)	Slope (ft/mi)	Adj Slope	Time-Area	Kb	Rainfall Losses: IA (in)	DTHETA	PSIF (in)	XKSAT (in/hr)	RTIMP (%)		Return Period Parameters: 2 Yr	5 Yr	10 Yr	25 Yr	50 Yr	100 Yr
Major Basin ID: GP																		
UH87	0.998	1.36	24.7	24.7	Urban	0.064	0.21	0.15	7.60	0.10	26	Tc (Hrs)	1.185*	1.185*	1.143*	1.036*	0.975*	0.925*
												Vel (f/s)	1.68	1.68	1.75	1.93	2.05	2.16
												R (Hrs)	0.572	0.572	0.549	0.493	0.461	0.435
UH91	0.929	2.03	13.5	13.5	Urban	0.066	0.21	0.25	4.80	0.31	27	Tc (Hrs)	1.500*	1.500*	1.500*	1.500*	1.500*	1.491*
												Vel (f/s)	1.98	1.98	1.98	1.98	1.98	2.00
												R (Hrs)	1.066	1.066	1.066	1.066	1.066	1.059
UH99	0.563	1.50	14.6	14.6	Urban	0.086	0.25	0.15	7.00	0.10	35	Tc (Hrs)	1.500*	1.500*	1.500*	1.447*	1.363*	1.294*
												Vel (f/s)	1.47	1.47	1.47	1.52	1.61	1.70
												R (Hrs)	1.114	1.114	1.114	1.070	1.001	0.945
UHAF	0.489	1.63	14.9	14.9	Urban	0.075	0.15	0.30	3.50	0.54	12	Tc (Hrs)	1.500*	1.500*	1.500*	1.500*	1.500*	1.469*
												Vel (f/s)	1.59	1.59	1.59	1.59	1.59	1.63
												R (Hrs)	1.290	1.290	1.290	1.290	1.290	1.260
UHLO	0.822	1.22	21.2	21.2	Urban	0.068	0.21	0.25	5.80	0.19	31	Tc (Hrs)	1.298*	1.298*	1.246*	1.112*	1.037*	0.976*
												Vel (f/s)	1.38	1.38	1.44	1.61	1.73	1.83
												R (Hrs)	0.648	0.648	0.619	0.546	0.505	0.472
UHNR	0.386	1.23	25.9	25.9	Urban	0.073	0.14	0.29	4.60	0.28	40	Tc (Hrs)	1.208*	1.208*	1.168*	1.063*	0.996*	0.939*
												Vel (f/s)	1.49	1.49	1.54	1.70	1.81	1.92
												R (Hrs)	0.926	0.926	0.893	0.804	0.748	0.701
WL59	0.562	1.64	37.4	37.4	Urban	0.086	0.17	0.32	4.70	0.29	22	Tc (Hrs)	1.485*	1.485*	1.430*	1.283*	1.191*	1.111*
												Vel (f/s)	1.62	1.62	1.68	1.87	2.02	2.17
												R (Hrs)	1.184	1.184	1.136	1.006	0.927	0.858
WL75	0.475	1.18	30.9	30.9	Urban	0.072	0.29	0.25	4.70	0.31	25	Tc (Hrs)	1.196*	1.196*	1.152*	1.036*	0.966*	0.903
												Vel (f/s)	1.45	1.45	1.50	1.67	1.79	1.92
												R (Hrs)	0.787	0.787	0.755	0.672	0.622	0.577
WL83	0.125	0.74	21.9	21.9	Urban	0.102	0.30	0.10	11.20	0.02	15	Tc (Hrs)	1.063*	1.063*	1.029*	0.943*	0.894	0.852
												Vel (f/s)	1.02	1.02	1.05	1.15	1.21	1.27
												R (Hrs)	1.018	1.018	0.982	0.891	0.840	0.797

* Non default value or value out of range

Area ID	Sub Basin Parameters: Area (sq mi)	Length (mi)	Slope (ft/mi)	Adj Slope	Time-Area	Kb	Rainfall Losses: IA (in)	DTHETA	PSIF (in)	XKSAT (in/hr)	RTIMP (%)		Return Period Parameters: 2 Yr	5 Yr	10 Yr	25 Yr	50 Yr	100 Yr
Major Basin ID: GP																		
WLNR	0.390	1.03	22.7	22.7	Urban	0.065	0.28	0.31	4.70	0.27	7	Tc (Hrs)	1.266*	1.266*	1.211*	1.071*	0.989*	0.915
												Vel (f/s)	1.19	1.19	1.25	1.41	1.53	1.65
												R (Hrs)	0.842	0.842	0.801	0.699	0.640	0.587
WWBR	0.184	0.64	261.8	246.6	Urban	0.098	0.22	0.19	7.00	0.10	25	Tc (Hrs)	0.488	0.488	0.470	0.425	0.400	0.379
												Vel (f/s)	1.92	1.92	2.00	2.21	2.35	2.48
												R (Hrs)	0.306	0.306	0.294	0.263	0.246	0.231
WWLP	0.136	0.38	307.0	265.8	Urban	0.102	0.16	0.27	7.00	0.10	15	Tc (Hrs)	0.388	0.388	0.373	0.335	0.314	0.296*
												Vel (f/s)	1.44	1.44	1.49	1.66	1.77	1.88
												R (Hrs)	0.186	0.186	0.178	0.158	0.147	0.138
WWRS	0.144	0.76	65.8	65.8	Urban	0.069	0.20	0.26	4.30	0.44	32	Tc (Hrs)	0.734	0.734	0.707	0.640	0.599	0.564
												Vel (f/s)	1.52	1.52	1.58	1.74	1.86	1.98
												R (Hrs)	0.636	0.636	0.610	0.546	0.508	0.474
YLLP	0.595	1.53	118.9	118.9	Urban	0.080	0.22	0.28	4.35	0.37	30	Tc (Hrs)	0.953*	0.953*	0.919*	0.828	0.774	0.724
												Vel (f/s)	2.35	2.35	2.44	2.71	2.90	3.10
												R (Hrs)	0.663	0.663	0.636	0.567	0.526	0.488

* Non default value or value out of range

Future Subbasin Data

Area ID	Sub Basin Parameters: Area (sq mi)	Length (mi)	Slope (ft/mi)	Adj Slope	Time-Area	Kb	Rainfall Losses: IA (in)	DTHETA	PSIF (in)	XKSAT (in/hr)	RTIMP (%)		Return Period Parameters: 2 Yr	5 Yr	10 Yr	25 Yr	50 Yr	100 Yr
Major Basin ID: GP																		
83RS	0.638	0.91	149.4	149.4	Urban	0.085	0.22	0.27	4.50	0.31	47	Tc (Hrs)	0.656	0.656	0.635	0.579	0.543	0.511
												Vel (f/s)	2.03	2.03	2.10	2.31	2.46	2.61
												R (Hrs)	0.278	0.278	0.268	0.242	0.225	0.211
CL57	0.746	1.29	42.2	42.2	Urban	0.074	0.23	0.27	4.55	0.33	31	Tc (Hrs)	1.169*	1.169*	1.127*	1.013*	0.940*	0.878
												Vel (f/s)	1.62	1.62	1.68	1.87	2.01	2.15
												R (Hrs)	0.637	0.637	0.612	0.544	0.500	0.464
AC35	0.755	1.72	21.5	21.5	Urban	0.045	0.15	0.25	5.30	0.20	67	Tc (Hrs)	1.101*	1.101*	1.068*	0.980*	0.927*	0.882
												Vel (f/s)	2.29	2.29	2.36	2.57	2.72	2.86
												R (Hrs)	0.746	0.746	0.721	0.655	0.616	0.583
JM63	0.840	1.38	49.6	49.6	Urban	0.069	0.20	0.28	5.10	0.24	24	Tc (Hrs)	1.128*	1.128*	1.083*	0.957*	0.885	0.828
												Vel (f/s)	1.79	1.79	1.87	2.11	2.29	2.44
												R (Hrs)	0.604	0.604	0.578	0.503	0.462	0.429
AC43	0.362	1.80	22.9	22.9	Urban	0.078	0.23	0.25	4.35	0.35	37	Tc (Hrs)	1.500*	1.500*	1.500*	1.412*	1.324*	1.246*
												Vel (f/s)	1.76	1.76	1.76	1.87	1.99	2.12
												R (Hrs)	1.657	1.657	1.657	1.550	1.444	1.349
JM67	0.381	1.11	63.4	63.4	Urban	0.090	0.23	0.27	4.35	0.36	36	Tc (Hrs)	1.003*	1.003*	0.969*	0.879	0.824	0.775
												Vel (f/s)	1.62	1.62	1.68	1.85	1.98	2.10
												R (Hrs)	0.699	0.699	0.673	0.604	0.562	0.526
AC51	0.576	2.44	17.6	17.6	Urban	0.077	0.24	0.15	8.00	0.07	35	Tc (Hrs)	1.500*	1.500*	1.500*	1.500*	1.500*	1.461*
												Vel (f/s)	2.39	2.39	2.39	2.39	2.39	2.45
												R (Hrs)	1.622	1.622	1.622	1.622	1.622	1.576
PEAF	0.531	0.91	33.1	33.1	Urban	0.066	0.19	0.25	4.20	0.36	48	Tc (Hrs)	0.903	0.903	0.875	0.800	0.752	0.710
												Vel (f/s)	1.48	1.48	1.53	1.67	1.77	1.88
												R (Hrs)	0.440	0.440	0.425	0.384	0.359	0.337
AC59	0.742	2.56	16.5	16.5	Urban	0.065	0.18	0.15	8.00	0.08	39	Tc (Hrs)	1.500*	1.500*	1.500*	1.500*	1.482*	1.410*
												Vel (f/s)	2.50	2.50	2.50	2.50	2.53	2.66
												R (Hrs)	1.459	1.459	1.459	1.459	1.440	1.362

* Non default value or value out of range

Area ID	Sub Basin Parameters: Area (sq mi)	Length (mi)	Slope (ft/mi)	Adj Slope	Time-Area	Kb	Rainfall Losses: IA (in)	DTHETA	PSIF (in)	XKSAT (in/hr)	RTIMP (%)		Return Period Parameters: 2 Yr	5 Yr	10 Yr	25 Yr	50 Yr	100 Yr
Major Basin ID: GP																		
SK67	0.942	1.50	26.7	26.7	Urban	0.076	0.25	0.26	5.20	0.24	30	Tc (Hrs)	1.482*	1.482*	1.423*	1.262*	1.169*	1.096*
												Vel (f/s)	1.48	1.48	1.55	1.74	1.88	2.01
												R (Hrs)	0.820	0.820	0.783	0.685	0.630	0.586
AC67	0.698	2.31	17.6	17.6	Urban	0.069	0.22	0.15	8.40	0.07	29	Tc (Hrs)	1.500*	1.500*	1.500*	1.500*	1.428*	1.358*
												Vel (f/s)	2.26	2.26	2.26	2.26	2.37	2.49
												R (Hrs)	1.392	1.392	1.392	1.392	1.318	1.246
UH67	0.784	1.86	24.5	24.5	Urban	0.058	0.23	0.25	5.80	0.17	44	Tc (Hrs)	1.338*	1.338*	1.291*	1.166*	1.094*	1.035*
												Vel (f/s)	2.04	2.04	2.11	2.34	2.49	2.64
												R (Hrs)	0.965	0.965	0.927	0.828	0.772	0.726
AC75	0.842	2.31	19.6	19.6	Urban	0.064	0.20	0.25	5.80	0.18	34	Tc (Hrs)	1.500*	1.500*	1.500*	1.500*	1.404*	1.324*
												Vel (f/s)	2.26	2.26	2.26	2.26	2.41	2.56
												R (Hrs)	1.251	1.251	1.251	1.251	1.162	1.089
UH97	0.272	1.21	22.1	22.1	Urban	0.076	0.21	0.25	5.60	0.22	28	Tc (Hrs)	1.324*	1.324*	1.277*	1.151*	1.072*	1.007*
												Vel (f/s)	1.34	1.34	1.39	1.54	1.66	1.76
												R (Hrs)	1.236	1.236	1.187	1.058	0.978	0.912
AF11	0.375	0.83	17.1	17.1	Urban	0.025	0.15	0.28	3.07	0.74	80	Tc (Hrs)	0.587	0.587	0.571	0.529	0.503	0.480
												Vel (f/s)	2.07	2.07	2.13	2.30	2.42	2.54
												R (Hrs)	0.309	0.309	0.300	0.275	0.260	0.247
UHSK	0.933	1.89	35.7	35.7	Urban	0.069	0.22	0.27	5.00	0.25	31	Tc (Hrs)	1.437*	1.437*	1.382*	1.227*	1.138*	1.067*
												Vel (f/s)	1.93	1.93	2.01	2.26	2.44	2.60
												R (Hrs)	0.958	0.958	0.917	0.804	0.739	0.689
BL15	0.962	1.42	28.8	28.8	Urban	0.073	0.22	0.25	4.60	0.32	28	Tc (Hrs)	1.415*	1.415*	1.361*	1.207*	1.114*	1.040*
												Vel (f/s)	1.47	1.47	1.53	1.73	1.87	2.00
												R (Hrs)	0.736	0.736	0.705	0.617	0.564	0.523
WL67	0.103	0.75	29.3	29.3	Urban	0.105	0.24	0.28	4.70	0.34	6	Tc (Hrs)	1.305*	1.305*	1.246*	1.100*	1.017*	0.943*
												Vel (f/s)	0.84	0.84	0.88	1.00	1.08	1.17
												R (Hrs)	1.444	1.444	1.371	1.194	1.094	1.006

* Non default value or value out of range

Area ID	Sub Basin Parameters: Area (sq mi)	Length (mi)	Slope (ft/mi)	Adj Slope	Time-Area	Kb	Rainfall Losses: IA (in)	DTHETA	PSIF (in)	XKSAT (in/hr)	RTIMP (%)		Return Period Parameters: 2 Yr	5 Yr	10 Yr	25 Yr	50 Yr	100 Yr
Major Basin ID: GP																		
BL35	1.139	2.09	21.1	21.1	Urban	0.066	0.22	0.15	7.30	0.09	42	Tc (Hrs)	1.500*	1.500*	1.475*	1.348*	1.274*	1.212*
												Vel (f/s)	2.04	2.04	2.08	2.27	2.41	2.53
												R (Hrs)	0.972	0.972	0.954	0.863	0.811	0.767
BL43	1.049	2.04	20.1	20.1	Urban	0.076	0.24	0.15	8.00	0.07	33	Tc (Hrs)	1.500*	1.500*	1.500*	1.454*	1.374*	1.306*
												Vel (f/s)	1.99	1.99	1.99	2.06	2.18	2.29
												R (Hrs)	0.999	0.999	0.999	0.965	0.906	0.857
BL51	1.045	2.05	19.7	19.7	Urban	0.067	0.22	0.19	6.60	0.14	31	Tc (Hrs)	1.500*	1.500*	1.500*	1.430*	1.341*	1.267*
												Vel (f/s)	2.00	2.00	2.00	2.10	2.24	2.37
												R (Hrs)	1.005	1.005	1.005	0.953	0.888	0.834
BL59	1.075	2.07	18.1	18.1	Urban	0.060	0.23	0.17	6.80	0.12	40	Tc (Hrs)	1.500*	1.500*	1.497*	1.361*	1.281*	1.215*
												Vel (f/s)	2.02	2.02	2.03	2.23	2.37	2.50
												R (Hrs)	0.997	0.997	0.994	0.894	0.836	0.789
BL67	0.233	1.20	19.7	19.7	Urban	0.064	0.18	0.23	6.20	0.16	52	Tc (Hrs)	1.143*	1.143*	1.107*	1.010*	0.953*	0.904
												Vel (f/s)	1.54	1.54	1.59	1.74	1.85	1.95
												R (Hrs)	1.139	1.139	1.100	0.993	0.931	0.878
BL75	1.063	2.01	25.7	25.7	Urban	0.069	0.24	0.26	5.20	0.24	30	Tc (Hrs)	1.500*	1.500*	1.500*	1.412*	1.309*	1.226*
												Vel (f/s)	1.97	1.97	1.97	2.09	2.25	2.40
												R (Hrs)	0.980	0.980	0.980	0.916	0.842	0.783
BL91	0.901	1.38	17.6	17.6	Urban	0.059	0.19	0.15	7.00	0.10	54	Tc (Hrs)	1.202*	1.202*	1.166*	1.071*	1.015*	0.967*
												Vel (f/s)	1.68	1.68	1.74	1.89	1.99	2.09
												R (Hrs)	0.623	0.623	0.602	0.548	0.516	0.489
BL99	1.133	1.60	17.5	17.5	Urban	0.066	0.22	0.21	6.40	0.14	36	Tc (Hrs)	1.497*	1.497*	1.441*	1.300*	1.220*	1.153*
												Vel (f/s)	1.57	1.57	1.63	1.81	1.92	2.04
												R (Hrs)	0.785	0.785	0.753	0.671	0.626	0.588
BLAF	0.283	1.46	11.9	11.9	Urban	0.081	0.20	0.28	3.55	0.52	20	Tc (Hrs)	1.500*	1.500*	1.500*	1.500*	1.500*	1.500*
												Vel (f/s)	1.43	1.43	1.43	1.43	1.43	1.43
												R (Hrs)	1.613	1.613	1.613	1.613	1.613	1.613

* Non default value or value out of range

Area ID	Sub Basin Parameters: Area (sq mi)	Length (mi)	Slope (ft/mi)	Adj Slope	Time-Area	Kb	Rainfall Losses: IA (in)	DTHETA	PSIF (in)	XKSAT (in/hr)	RTIMP (%)		Return Period Parameters: 2 Yr	5 Yr	10 Yr	25 Yr	50 Yr	100 Yr
Major Basin ID: GP																		
BLLO	0.765	1.75	17.2	17.2	Urban	0.053	0.18	0.25	4.35	0.34	55	Tc (Hrs)	1.369*	1.369*	1.327*	1.212*	1.138*	1.076*
												Vel (f/s)	1.87	1.87	1.93	2.12	2.26	2.39
												R (Hrs)	0.956	0.956	0.923	0.835	0.779	0.732
BLNR	0.603	1.45	24.5	24.5	Urban	0.061	0.18	0.26	5.20	0.21	50	Tc (Hrs)	1.180*	1.180*	1.143*	1.039*	0.977*	0.926*
												Vel (f/s)	1.80	1.80	1.86	2.05	2.18	2.30
												R (Hrs)	0.798	0.798	0.771	0.694	0.648	0.610
BN99	1.037	1.39	16.9	16.9	Urban	0.068	0.21	0.25	6.00	0.17	34	Tc (Hrs)	1.476*	1.476*	1.418*	1.269*	1.186*	1.119*
												Vel (f/s)	1.38	1.38	1.44	1.61	1.72	1.82
												R (Hrs)	0.727	0.727	0.695	0.614	0.570	0.534
BY07	0.513	0.92	22.1	22.1	Urban	0.074	0.23	0.25	5.10	0.23	38	Tc (Hrs)	1.107*	1.107*	1.070*	0.971*	0.908	0.856
												Vel (f/s)	1.22	1.22	1.26	1.39	1.49	1.58
												R (Hrs)	0.567	0.567	0.546	0.490	0.455	0.426
BY87	0.959	1.39	18.9	18.9	Urban	0.065	0.24	0.15	8.00	0.08	33	Tc (Hrs)	1.284*	1.284*	1.241*	1.130*	1.066*	1.013*
												Vel (f/s)	1.59	1.59	1.64	1.80	1.91	2.01
												R (Hrs)	0.651	0.651	0.627	0.565	0.529	0.500
BY91	0.501	0.81	37.5	37.5	Urban	0.081	0.23	0.25	4.50	0.34	27	Tc (Hrs)	0.982*	0.982*	0.947*	0.854	0.797	0.747
												Vel (f/s)	1.21	1.21	1.25	1.39	1.49	1.59
												R (Hrs)	0.454	0.454	0.436	0.389	0.361	0.335
BYAF	0.609	1.83	30.5	30.5	Urban	0.052	0.17	0.27	4.70	0.26	30	Tc (Hrs)	1.228*	1.228*	1.184*	1.065*	0.991*	0.931*
												Vel (f/s)	2.19	2.19	2.27	2.52	2.71	2.88
												R (Hrs)	0.999	0.999	0.960	0.854	0.788	0.735
BYNR	1.034	1.58	26.6	26.6	Urban	0.076	0.22	0.26	5.80	0.17	31	Tc (Hrs)	1.467*	1.467*	1.407*	1.255*	1.171*	1.103*
												Vel (f/s)	1.58	1.58	1.65	1.85	1.98	2.10
												R (Hrs)	0.801	0.801	0.765	0.674	0.624	0.584
CL07	0.524	1.42	57.5	57.5	Urban	0.081	0.21	0.27	4.55	0.30	26	Tc (Hrs)	1.138*	1.138*	1.098*	0.989*	0.921*	0.861
												Vel (f/s)	1.83	1.83	1.90	2.11	2.26	2.42
												R (Hrs)	0.817	0.817	0.785	0.699	0.646	0.600

* Non default value or value out of range

Area ID	Sub Basin Parameters: Area (sq mi)	Length (mi)	Slope (ft/mi)	Adj Slope	Time-Area	Kb	Rainfall Losses: IA (in)	DTHETA	PSIF (in)	XKSAT (in/hr)	RTIMP (%)		Return Period Parameters: 2 Yr	5 Yr	10 Yr	25 Yr	50 Yr	100 Yr
Major Basin ID: GP																		
CL67	0.275	1.29	47.3	47.3	Urban	0.087	0.22	0.27	4.40	0.38	24	Tc (Hrs)	1.227*	1.227*	1.181*	1.062*	0.991*	0.928*
												Vel (f/s)	1.54	1.54	1.60	1.78	1.91	2.04
												R (Hrs)	1.188	1.188	1.139	1.012	0.937	0.872
CL77	0.316	0.89	76.3	76.3	Urban	0.090	0.28	0.26	4.40	0.38	14	Tc (Hrs)	0.947*	0.947*	0.906	0.806	0.747	0.697
												Vel (f/s)	1.38	1.38	1.44	1.62	1.75	1.87
												R (Hrs)	0.612	0.612	0.582	0.511	0.471	0.436
CLAF	0.289	0.91	47.6	47.6	URBAN	0.083	0.16	0.29	3.95	0.40	25	Tc (Hrs)	0.994*	0.994*	0.958*	0.863	0.806	0.756
												Vel (f/s)	1.34	1.34	1.39	1.55	1.66	1.77
												R (Hrs)	0.692	0.692	0.664	0.591	0.548	0.510
CT35	0.976	1.97	12.4	12.4	Urban	0.060	0.21	0.25	5.20	0.21	48	Tc (Hrs)	1.500*	1.500*	1.500*	1.500*	1.430*	1.352*
												Vel (f/s)	1.93	1.93	1.93	1.93	2.02	2.14
												R (Hrs)	1.012	1.012	1.012	1.012	0.960	0.902
CT43	0.996	2.00	17.3	17.3	Urban	0.070	0.23	0.15	8.00	0.07	37	Tc (Hrs)	1.500*	1.500*	1.500*	1.436*	1.358*	1.292*
												Vel (f/s)	1.96	1.96	1.96	2.04	2.16	2.27
												R (Hrs)	1.013	1.013	1.013	0.965	0.907	0.858
CT51	0.988	1.99	16.5	16.5	Urban	0.049	0.18	0.21	6.40	0.13	56	Tc (Hrs)	1.366*	1.366*	1.323*	1.212*	1.145*	1.089*
												Vel (f/s)	2.14	2.14	2.21	2.41	2.55	2.68
												R (Hrs)	0.914	0.914	0.882	0.799	0.751	0.710
DV07	0.645	1.35	41.8	41.8	Urban	0.085	0.26	0.25	4.65	0.29	27	Tc (Hrs)	1.277*	1.277*	1.230*	1.104*	1.023*	0.956*
												Vel (f/s)	1.55	1.55	1.61	1.79	1.94	2.07
												R (Hrs)	0.792	0.792	0.760	0.674	0.619	0.575
DV56	0.287	0.73	80.2	80.2	NATURAL	0.090	0.10	0.33	4.65	0.27	38	Tc (Hrs)	0.736	0.736	0.711	0.647	0.606	0.571
												Vel (f/s)	1.45	1.45	1.51	1.65	1.77	1.88
												R (Hrs)	0.417	0.417	0.401	0.361	0.336	0.314
DV67	0.503	0.73	196.0	196.0	Urban	0.081	0.18	0.29	4.55	0.32	38	Tc (Hrs)	0.535	0.535	0.518	0.470	0.441	0.415
												Vel (f/s)	2.00	2.00	2.07	2.28	2.43	2.58
												R (Hrs)	0.213	0.213	0.205	0.184	0.172	0.160

* Non default value or value out of range

Area ID	Sub Basin Parameters: Area (sq mi)	Length (mi)	Slope (ft/mi)	Adj Slope	Time-Area	Kb	Rainfall Losses: IA (in)	DTHETA	PSIF (in)	XKSAT (in/hr)	RTIMP (%)		Return Period Parameters: 2 Yr	5 Yr	10 Yr	25 Yr	50 Yr	100 Yr
Major Basin ID: GP																		
DV75	0.501	1.48	25.8	25.8	Urban	0.078	0.24	0.25	4.90	0.26	34	Tc (Hrs)	1.402*	1.402*	1.354*	1.227*	1.146*	1.077*
												Vel (f/s)	1.55	1.55	1.60	1.77	1.89	2.02
												R (Hrs)	1.092	1.092	1.051	0.942	0.873	0.815
DV83	0.107	0.80	17.4	17.4	Urban	0.104	0.25	0.10	11.20	0.02	30	Tc (Hrs)	1.175*	1.175*	1.142*	1.055*	1.002*	0.956*
												Vel (f/s)	1.00	1.00	1.03	1.11	1.17	1.23
												R (Hrs)	1.324	1.324	1.282	1.174	1.109	1.052
DV87	1.004	1.01	33.2	33.2	Urban	0.080	0.30	0.17	6.80	0.13	15	Tc (Hrs)	1.132*	1.132*	1.083*	0.961*	0.895	0.841
												Vel (f/s)	1.31	1.31	1.37	1.54	1.66	1.76
												R (Hrs)	0.427	0.427	0.406	0.356	0.329	0.307
DV99	1.217	1.10	33.1	33.1	URBAN	0.071	0.28	0.25	4.40	0.38	22	Tc (Hrs)	1.290*	1.290*	1.234*	1.080*	0.985*	0.911
												Vel (f/s)	1.25	1.25	1.31	1.49	1.64	1.77
												R (Hrs)	0.474	0.474	0.451	0.389	0.351	0.322
DVAF	0.412	0.97	50.3	50.3	Urban	0.089	0.15	0.33	5.60	0.18	10	Tc (Hrs)	1.054*	1.054*	1.012*	0.898	0.830	0.776
												Vel (f/s)	1.35	1.35	1.41	1.58	1.71	1.83
												R (Hrs)	0.634	0.634	0.607	0.531	0.487	0.452
DVLP	0.136	1.05	31.5	31.5	URBAN	0.088	0.23	0.25	4.45	0.33	38	Tc (Hrs)	1.175*	1.175*	1.137*	1.033*	0.968*	0.911
												Vel (f/s)	1.31	1.31	1.35	1.49	1.59	1.69
												R (Hrs)	1.435	1.435	1.383	1.243	1.158	1.082
DVNR	0.401	1.11	18.1	18.1	Urban	0.083	0.23	0.26	4.35	0.34	33	Tc (Hrs)	1.424*	1.424*	1.376*	1.246*	1.167*	1.095*
												Vel (f/s)	1.14	1.14	1.18	1.31	1.40	1.49
												R (Hrs)	1.003	1.003	0.965	0.864	0.804	0.749
DW07	0.484	1.29	7.8	7.8	Urban	0.062	0.19	0.19	6.60	0.16	28	Tc (Hrs)	1.500*	1.500*	1.500*	1.422*	1.332*	1.258*
												Vel (f/s)	1.26	1.26	1.26	1.33	1.42	1.50
												R (Hrs)	1.076	1.076	1.076	1.014	0.943	0.885
DW99	0.155	0.85	18.9	18.9	Urban	0.068	0.18	0.16	7.00	0.12	35	Tc (Hrs)	1.008*	1.008*	0.974*	0.888	0.836	0.794
												Vel (f/s)	1.24	1.24	1.28	1.40	1.49	1.57
												R (Hrs)	0.949	0.949	0.913	0.824	0.771	0.728

* Non default value or value out of range

Area ID	Sub Basin Parameters: Area (sq mi)	Length (mi)	Slope (ft/mi)	Adj Slope	Time-Area	Kb	Rainfall Losses: IA (in)	DTHETA	PSIF (in)	XKSAT (in/hr)	RTIMP (%)		Return Period Parameters: 2 Yr	5 Yr	10 Yr	25 Yr	50 Yr	100 Yr
Major Basin ID: GP																		
GHAF	0.563	1.42	15.4	15.4	URBAN	0.024	0.15	0.28	3.03	0.76	79	Tc (Hrs)	0.785	0.785	0.764	0.706	0.671	0.640
												Vel (f/s)	2.65	2.65	2.73	2.95	3.10	3.25
												R (Hrs)	0.520	0.520	0.504	0.462	0.437	0.414
GHNR	0.841	1.80	12.9	12.9	Urban	0.039	0.14	0.28	3.71	0.47	47	Tc (Hrs)	1.364*	1.364*	1.320*	1.202*	1.128*	1.060*
												Vel (f/s)	1.94	1.94	2.00	2.20	2.34	2.49
												R (Hrs)	0.922	0.922	0.890	0.802	0.747	0.697
GL03	0.649	1.43	33.7	33.7	Urban	0.085	0.10	0.27	4.10	0.38	69	Tc (Hrs)	1.219*	1.219*	1.185*	1.092*	1.033*	0.981*
												Vel (f/s)	1.72	1.72	1.77	1.92	2.03	2.14
												R (Hrs)	0.785	0.785	0.761	0.695	0.653	0.617
GL11	0.426	1.01	22.1	22.1	Urban	0.087	0.19	0.25	4.35	0.33	60	Tc (Hrs)	1.191*	1.191*	1.157*	1.063*	1.004*	0.952*
												Vel (f/s)	1.24	1.24	1.28	1.39	1.48	1.56
												R (Hrs)	0.737	0.737	0.713	0.649	0.609	0.574
GL14	0.481	1.41	13.1	13.1	Urban	0.025	0.15	0.25	3.81	0.44	80	Tc (Hrs)	0.823	0.823	0.802	0.743	0.705	0.673
												Vel (f/s)	2.51	2.51	2.58	2.78	2.93	3.07
												R (Hrs)	0.596	0.596	0.578	0.531	0.502	0.476
GLAF	0.388	1.63	11.3	11.3	Urban	0.025	0.15	0.28	3.07	0.74	80	Tc (Hrs)	0.936*	0.936*	0.911	0.843	0.801	0.764
												Vel (f/s)	2.55	2.55	2.62	2.84	2.98	3.13
												R (Hrs)	0.872	0.872	0.846	0.776	0.733	0.696
GLGH	0.079	0.49	37.3	37.3	URBAN	0.098	0.10	0.25	4.40	0.32	95	Tc (Hrs)	0.685	0.685	0.669	0.622	0.593	0.567
												Vel (f/s)	1.05	1.05	1.07	1.16	1.21	1.27
												R (Hrs)	0.584	0.584	0.568	0.525	0.497	0.473
GR99	1.309	2.66	15.1	15.1	Urban	0.065	0.20	0.17	6.80	0.12	41	Tc (Hrs)	1.500*	1.500*	1.500*	1.500*	1.500*	1.500*
												Vel (f/s)	2.60	2.60	2.60	2.60	2.60	2.60
												R (Hrs)	1.089	1.089	1.089	1.089	1.089	1.089
GRAF	0.859	2.15	27.5	27.5	Urban	0.073	0.23	0.15	7.00	0.11	37	Tc (Hrs)	1.500*	1.500*	1.461*	1.330*	1.253*	1.190*
												Vel (f/s)	2.10	2.10	2.16	2.37	2.52	2.65
												R (Hrs)	1.167	1.167	1.134	1.021	0.956	0.903

* Non default value or value out of range

Area ID	Sub Basin Parameters: Area (sq mi)	Length (mi)	Slope (ft/mi)	Adj Slope	Time-Area	Kb	Rainfall Losses: IA (in)	DTHETA	PSIF (in)	XKSAT (in/hr)	RTIMP (%)		Return Period Parameters: 2 Yr	5 Yr	10 Yr	25 Yr	50 Yr	100 Yr
Major Basin ID: GP																		
GRNR	0.947	1.36	24.1	24.1	Urban	0.055	0.17	0.26	5.00	0.23	48	Tc (Hrs)	1.131*	1.131*	1.091*	0.986*	0.925*	0.875
												Vel (f/s)	1.76	1.76	1.83	2.02	2.16	2.28
												R (Hrs)	0.559	0.559	0.538	0.480	0.448	0.421
GW35	1.008	1.98	10.9	10.9	Urban	0.058	0.21	0.17	6.80	0.12	45	Tc (Hrs)	1.500*	1.500*	1.500*	1.500*	1.427*	1.356*
												Vel (f/s)	1.94	1.94	1.94	1.94	2.04	2.14
												R (Hrs)	0.998	0.998	0.998	0.998	0.944	0.892
GW43	0.987	2.00	19.9	19.9	Urban	0.067	0.24	0.19	6.60	0.13	37	Tc (Hrs)	1.500*	1.500*	1.500*	1.388*	1.305*	1.235*
												Vel (f/s)	1.96	1.96	1.96	2.11	2.25	2.38
												R (Hrs)	1.018	1.018	1.018	0.934	0.872	0.820
GW51	0.962	1.97	20.1	20.1	Urban	0.074	0.26	0.21	6.40	0.17	21	Tc (Hrs)	1.500*	1.500*	1.500*	1.500*	1.423*	1.336*
												Vel (f/s)	1.93	1.93	1.93	1.93	2.03	2.16
												R (Hrs)	1.021	1.021	1.021	1.021	0.962	0.898
GW59	0.944	1.96	18.5	18.5	Urban	0.072	0.21	0.15	7.30	0.10	43	Tc (Hrs)	1.500*	1.500*	1.500*	1.415*	1.337*	1.272*
												Vel (f/s)	1.92	1.92	1.92	2.03	2.15	2.26
												R (Hrs)	1.027	1.027	1.027	0.963	0.904	0.855
GW67	0.892	1.90	17.3	17.3	Urban	0.068	0.23	0.15	8.40	0.06	39	Tc (Hrs)	1.500*	1.500*	1.490*	1.364*	1.292*	1.230*
												Vel (f/s)	1.86	1.86	1.87	2.04	2.16	2.27
												R (Hrs)	1.035	1.035	1.027	0.932	0.877	0.830
GW91	0.477	1.03	20.5	20.5	Urban	0.067	0.20	0.25	5.60	0.19	43	Tc (Hrs)	1.108*	1.108*	1.073*	0.974*	0.914	0.865
												Vel (f/s)	1.36	1.36	1.41	1.55	1.65	1.75
												R (Hrs)	0.647	0.647	0.625	0.561	0.523	0.492
GWLO	0.814	1.73	29.5	29.5	Urban	0.025	0.10	0.25	4.20	0.43	60	Tc (Hrs)	0.774	0.774	0.751	0.689	0.649	0.614
												Vel (f/s)	3.28	3.28	3.38	3.68	3.91	4.13
												R (Hrs)	0.485	0.485	0.470	0.427	0.399	0.375
GWNR	0.696	1.62	23.7	23.7	Urban	0.064	0.18	0.27	4.65	0.29	36	Tc (Hrs)	1.391*	1.391*	1.343*	1.212*	1.128*	1.060*
												Vel (f/s)	1.71	1.71	1.77	1.96	2.11	2.24
												R (Hrs)	0.966	0.966	0.928	0.828	0.765	0.714

* Non default value or value out of range

Area ID	Sub Basin Parameters: Area (sq mi)	Length (mi)	Slope (ft/mi)	Adj Slope	Time-Area	Kb	Rainfall Losses: IA (in)	DTHETA	PSIF (in)	XKSAT (in/hr)	RTIMP (%)		Return Period Parameters: 2 Yr	5 Yr	10 Yr	25 Yr	50 Yr	100 Yr
Major Basin ID: GP																		
HV01	0.444	1.09	49.3	49.3	Urban	0.068	0.19	0.25	5.30	0.20	52	Tc (Hrs)	0.854	0.854	0.828	0.756	0.712	0.675
												Vel (f/s)	1.87	1.87	1.93	2.11	2.25	2.37
												R (Hrs)	0.529	0.529	0.511	0.462	0.432	0.407
HV07	0.304	0.62	138.0	138.0	Urban	0.092	0.25	0.25	3.92	0.41	31	Tc (Hrs)	0.609	0.609	0.587	0.531	0.497	0.467
												Vel (f/s)	1.49	1.49	1.55	1.71	1.83	1.95
												R (Hrs)	0.287	0.287	0.276	0.246	0.229	0.214
HV55	2.054	2.62	66.6	66.6	Urban	0.071	0.21	0.28	4.40	0.35	34	Tc (Hrs)	1.500*	1.500*	1.494*	1.304*	1.199*	1.117*
												Vel (f/s)	2.56	2.56	2.57	2.95	3.20	3.44
												R (Hrs)	0.832	0.832	0.828	0.712	0.649	0.600
HV67	0.544	1.24	136.3	136.3	Urban	0.083	0.22	0.27	4.20	0.41	59	Tc (Hrs)	0.748	0.748	0.726	0.667	0.630	0.597
												Vel (f/s)	2.43	2.43	2.51	2.73	2.89	3.05
												R (Hrs)	0.451	0.451	0.436	0.396	0.372	0.351
HV75	0.958	1.62	44.9	44.9	Urban	0.077	0.24	0.26	4.10	0.41	28	Tc (Hrs)	1.389*	1.389*	1.335*	1.194*	1.100*	1.022*
												Vel (f/s)	1.71	1.71	1.78	1.99	2.16	2.32
												R (Hrs)	0.803	0.803	0.769	0.679	0.620	0.571
HV83	0.035	0.38	366.8	281.8	Urban	0.116	0.27	0.25	4.15	0.41	42	Tc (Hrs)	0.414	0.414	0.400	0.364	0.343	0.323
												Vel (f/s)	1.35	1.35	1.39	1.53	1.62	1.73
												R (Hrs)	0.434	0.434	0.418	0.376	0.351	0.329
HV87	0.285	0.52	415.3	291.2	NATURAL	0.093	0.13	0.34	4.00	0.39	37	Tc (Hrs)	0.435	0.435	0.421	0.382	0.358	0.338
												Vel (f/s)	1.75	1.75	1.81	2.00	2.13	2.26
												R (Hrs)	0.178	0.178	0.172	0.154	0.144	0.134
HV93	0.172	0.67	243.3	235.6	Urban	0.099	0.25	0.28	4.15	0.43	30	Tc (Hrs)	0.569	0.569	0.547	0.494	0.461	0.434
												Vel (f/s)	1.73	1.73	1.80	1.99	2.13	2.26
												R (Hrs)	0.392	0.392	0.375	0.335	0.310	0.290
HVAF	0.215	0.45	52.2	52.2	Urban	0.097	0.25	0.25	3.92	0.41	32	Tc (Hrs)	0.718	0.718	0.692	0.626	0.586	0.551
												Vel (f/s)	0.92	0.92	0.95	1.05	1.13	1.20
												R (Hrs)	0.325	0.325	0.312	0.279	0.259	0.242

* Non default value or value out of range

Area ID	Sub Basin Parameters: Area (sq mi)	Length (mi)	Slope (ft/mi)	Adj Slope	Time-Area	Kb	Rainfall Losses: IA (in)	DTHETA	PSIF (in)	XKSAT (in/hr)	RTIMP (%)		Return Period Parameters: 2 Yr	5 Yr	10 Yr	25 Yr	50 Yr	100 Yr
Major Basin ID: GP																		
HVLP	0.198	1.05	60.5	60.5	Urban	0.065	0.20	0.25	4.30	0.37	48	Tc (Hrs)	0.796	0.796	0.771	0.705	0.664	0.627
												Vel (f/s)	1.93	1.93	2.00	2.18	2.32	2.46
												R (Hrs)	0.751	0.751	0.726	0.657	0.614	0.577
HVNR	0.202	1.15	33.2	33.2	NATURAL	0.097	0.10	0.35	3.48	0.55		Tc (Hrs)	1.500*	1.500*	1.500*	1.363*	1.249*	1.157*
												Vel (f/s)	1.12	1.12	1.12	1.24	1.35	1.46
												R (Hrs)	1.615	1.615	1.615	1.452	1.317	1.210
HVRS	0.630	1.45	37.3	37.3	URBAN	0.085	0.23	0.27	4.10	0.40	25	Tc (Hrs)	1.417*	1.417*	1.362*	1.222*	1.138*	1.062*
												Vel (f/s)	1.50	1.50	1.56	1.74	1.87	2.00
												R (Hrs)	0.954	0.954	0.914	0.810	0.748	0.693
JM75	1.112	1.43	137.4	137.4	URBAN	0.079	0.18	0.30	4.30	0.34	26	Tc (Hrs)	0.947*	0.947*	0.910	0.802	0.737	0.686
												Vel (f/s)	2.21	2.21	2.30	2.62	2.85	3.06
												R (Hrs)	0.437	0.437	0.417	0.363	0.330	0.305
JM76	0.169	0.82	41.6	41.6	Urban	0.099	0.21	0.28	3.92	0.41	22	Tc (Hrs)	1.099*	1.099*	1.057*	0.949*	0.885	0.829
												Vel (f/s)	1.09	1.09	1.14	1.27	1.36	1.45
												R (Hrs)	0.966	0.966	0.925	0.821	0.759	0.706
JM80	0.164	0.68	62.7	62.7	Urban	0.099	0.24	0.25	3.88	0.42	34	Tc (Hrs)	0.836	0.836	0.807	0.731	0.685	0.645
												Vel (f/s)	1.19	1.19	1.24	1.36	1.46	1.55
												R (Hrs)	0.624	0.624	0.600	0.538	0.500	0.468
JM99	0.568	1.10	43.0	43.0	Urban	0.082	0.24	0.13	10.10	0.03	33	Tc (Hrs)	0.938*	0.938*	0.910	0.838	0.795	0.757
												Vel (f/s)	1.72	1.72	1.77	1.93	2.03	2.13
												R (Hrs)	0.513	0.513	0.496	0.453	0.427	0.405
JMAF	0.147	0.84	184.9	184.9	URBAN	0.101	0.19	0.29	4.90	0.24	24	Tc (Hrs)	0.675	0.675	0.650	0.585	0.544	0.510
												Vel (f/s)	1.83	1.83	1.90	2.11	2.26	2.42
												R (Hrs)	0.620	0.620	0.595	0.530	0.488	0.454
JMLP	0.705	1.26	61.9	61.9	Urban	0.079	0.24	0.25	6.00	0.16	36	Tc (Hrs)	0.986*	0.986*	0.949*	0.853	0.799	0.754
												Vel (f/s)	1.87	1.87	1.95	2.17	2.31	2.45
												R (Hrs)	0.535	0.535	0.513	0.456	0.423	0.397

* Non default value or value out of range

Area ID	Sub Basin Parameters: Area (sq mi)	Length (mi)	Slope (ft/mi)	Adj Slope	Time-Area	Kb	Rainfall Losses: IA (in)	DTHETA	PSIF (in)	XKSAT (in/hr)	RTIMP (%)		Return Period Parameters: 2 Yr	5 Yr	10 Yr	25 Yr	50 Yr	100 Yr
Major Basin ID: GP																		
JMNR	0.149	1.00	32.4	32.4	URBAN	0.101	0.17	0.31	3.29	0.63	13	Tc (Hrs)	1.482*	1.482*	1.409*	1.240*	1.149*	1.071*
												Vel (f/s)	0.99	0.99	1.04	1.18	1.28	1.37
												R (Hrs)	1.695	1.695	1.602	1.390	1.277	1.182
JMRS	0.567	1.40	66.2	66.2	Urban	0.086	0.23	0.27	5.30	0.21	29	Tc (Hrs)	1.091*	1.091*	1.052*	0.945*	0.879	0.826
												Vel (f/s)	1.88	1.88	1.95	2.17	2.34	2.49
												R (Hrs)	0.737	0.737	0.708	0.628	0.580	0.541
LO51	1.130	1.80	14.5	14.5	Urban	0.065	0.16	0.23	4.25	0.35	47	Tc (Hrs)	1.500*	1.500*	1.500*	1.494*	1.397*	1.317*
												Vel (f/s)	1.76	1.76	1.76	1.77	1.89	2.00
												R (Hrs)	0.866	0.866	0.866	0.862	0.800	0.750
LO67	1.217	1.52	19.8	19.8	Urban	0.059	0.20	0.25	5.70	0.20	33	Tc (Hrs)	1.403*	1.403*	1.345*	1.198*	1.117*	1.051*
												Vel (f/s)	1.59	1.59	1.66	1.86	2.00	2.12
												R (Hrs)	0.674	0.674	0.643	0.565	0.523	0.489
LO75	0.970	1.42	23.7	23.7	Urban	0.074	0.24	0.25	6.00	0.16	34	Tc (Hrs)	1.397*	1.397*	1.342*	1.202*	1.123*	1.059*
												Vel (f/s)	1.49	1.49	1.55	1.73	1.85	1.97
												R (Hrs)	0.722	0.722	0.691	0.611	0.567	0.531
MEAF	1.369	1.86	42.8	42.8	Urban	0.056	0.19	0.26	4.65	0.31	35	Tc (Hrs)	1.246*	1.246*	1.195*	1.056*	0.979*	0.917*
												Vel (f/s)	2.19	2.19	2.28	2.58	2.79	2.97
												R (Hrs)	0.649	0.649	0.619	0.540	0.496	0.462
NO07	0.340	1.01	17.5	17.5	Urban	0.072	0.21	0.25	4.55	0.36	29	Tc (Hrs)	1.299*	1.299*	1.253*	1.132*	1.058*	0.992*
												Vel (f/s)	1.14	1.14	1.18	1.31	1.40	1.49
												R (Hrs)	0.922	0.922	0.886	0.791	0.734	0.684
NO11	0.860	1.29	34.2	34.2	Urban	0.050	0.20	0.25	3.95	0.40	52	Tc (Hrs)	0.945*	0.945*	0.916	0.836	0.783	0.738
												Vel (f/s)	2.00	2.00	2.07	2.26	2.42	2.56
												R (Hrs)	0.464	0.464	0.449	0.405	0.377	0.353
NO99	0.858	1.62	10.4	10.4	Urban	0.074	0.21	0.26	4.25	0.38	28	Tc (Hrs)	1.500*	1.500*	1.500*	1.500*	1.500*	1.500*
												Vel (f/s)	1.58	1.58	1.58	1.58	1.58	1.58
												R (Hrs)	0.932	0.932	0.932	0.932	0.932	0.932

* Non default value or value out of range

Area ID	Sub Basin Parameters: Area (sq mi)	Length (mi)	Slope (ft/mi)	Adj Slope	Time-Area	Kb	Rainfall Losses: IA (in)	DTHETA	PSIF (in)	XKSAT (in/hr)	RTIMP (%)		Return Period Parameters: 2 Yr	5 Yr	10 Yr	25 Yr	50 Yr	100 Yr
Major Basin ID: GP																		
NOAF	0.285	1.16	26.8	26.8	NATURAL	0.042	0.11	0.30	2.92	0.82	26	Tc (Hrs)	1.013*	1.013*	0.969*	0.862	0.805	0.755
												Vel (f/s)	1.68	1.68	1.76	1.97	2.11	2.25
												R (Hrs)	0.865	0.865	0.823	0.723	0.669	0.624
NONR	0.830	2.01	13.0	13.0	Urban	0.068	0.22	0.15	7.60	0.08	41	Tc (Hrs)	1.500*	1.500*	1.500*	1.500*	1.453*	1.383*
												Vel (f/s)	1.97	1.97	1.97	1.97	2.03	2.13
												R (Hrs)	1.128	1.128	1.128	1.128	1.089	1.031
OL03	1.099	1.76	16.8	16.8	Urban	0.068	0.22	0.25	5.20	0.24	33	Tc (Hrs)	1.500*	1.500*	1.500*	1.477*	1.373*	1.289*
												Vel (f/s)	1.72	1.72	1.72	1.75	1.88	2.00
												R (Hrs)	0.864	0.864	0.864	0.850	0.783	0.731
OL11	0.339	0.82	26.3	26.3	Urban	0.085	0.26	0.25	4.25	0.43	22	Tc (Hrs)	1.186*	1.186*	1.138*	1.021*	0.951*	0.891
												Vel (f/s)	1.01	1.01	1.06	1.18	1.26	1.35
												R (Hrs)	0.707	0.707	0.675	0.598	0.553	0.515
OL99	0.436	1.47	29.4	29.4	Urban	0.078	0.19	0.27	4.25	0.38	28	Tc (Hrs)	1.402*	1.402*	1.352*	1.220*	1.141*	1.070*
												Vel (f/s)	1.54	1.54	1.59	1.77	1.89	2.01
												R (Hrs)	1.176	1.176	1.130	1.008	0.935	0.872
OLAF	1.026	1.98	27.8	27.8	Urban	0.072	0.20	0.28	3.60	0.50	26	Tc (Hrs)	1.500*	1.500*	1.500*	1.500*	1.411*	1.305*
												Vel (f/s)	1.94	1.94	1.94	1.94	2.06	2.23
												R (Hrs)	0.988	0.988	0.988	0.988	0.923	0.846
OLNR	0.696	1.81	14.1	14.1	Urban	0.080	0.23	0.17	6.80	0.11	38	Tc (Hrs)	1.500*	1.500*	1.500*	1.500*	1.473*	1.399*
												Vel (f/s)	1.77	1.77	1.77	1.77	1.80	1.90
												R (Hrs)	1.147	1.147	1.147	1.147	1.124	1.061
PE03	0.409	1.47	20.3	20.3	Urban	0.069	0.20	0.25	4.80	0.32	29	Tc (Hrs)	1.452*	1.452*	1.402*	1.266*	1.183*	1.108*
												Vel (f/s)	1.48	1.48	1.54	1.70	1.82	1.95
												R (Hrs)	1.268	1.268	1.219	1.089	1.010	0.940
PE07	0.575	1.76	14.9	14.9	Urban	0.059	0.18	0.25	5.30	0.27	23	Tc (Hrs)	1.500*	1.500*	1.500*	1.428*	1.323*	1.238*
												Vel (f/s)	1.72	1.72	1.72	1.81	1.95	2.09
												R (Hrs)	1.250	1.250	1.250	1.184	1.087	1.010

* Non default value or value out of range

Area ID	Sub Basin Parameters: Area (sq mi)	Length (mi)	Slope (ft/mi)	Adj Slope	Time-Area	Kb	Rainfall Losses: IA (in)	DTHETA	PSIF (in)	XKSAT (in/hr)	RTIMP (%)		Return Period Parameters: 2 Yr	5 Yr	10 Yr	25 Yr	50 Yr	100 Yr
Major Basin ID: GP																		
PE11	0.924	2.11	12.3	12.3	Urban	0.065	0.20	0.25	6.00	0.18	30	Tc (Hrs)	1.500*	1.500*	1.500*	1.500*	1.500*	1.490*
												Vel (f/s)	2.06	2.06	2.06	2.06	2.06	2.08
												R (Hrs)	1.103	1.103	1.103	1.103	1.103	1.095
PE35	0.977	1.98	6.7	6.7	Urban	0.068	0.23	0.24	4.70	0.27	40	Tc (Hrs)	1.500*	1.500*	1.500*	1.500*	1.500*	1.500*
												Vel (f/s)	1.94	1.94	1.94	1.94	1.94	1.94
												R (Hrs)	1.016	1.016	1.016	1.016	1.016	1.016
PE43	0.997	2.00	13.8	13.8	Urban	0.069	0.24	0.25	5.70	0.19	32	Tc (Hrs)	1.500*	1.500*	1.500*	1.500*	1.500*	1.452*
												Vel (f/s)	1.96	1.96	1.96	1.96	1.96	2.02
												R (Hrs)	1.012	1.012	1.012	1.012	1.012	0.976
PE97	0.560	1.61	29.0	29.0	Urban	0.067	0.18	0.26	4.65	0.31	30	Tc (Hrs)	1.344*	1.344*	1.296*	1.171*	1.091*	1.022*
												Vel (f/s)	1.76	1.76	1.82	2.02	2.16	2.31
												R (Hrs)	1.046	1.046	1.005	0.898	0.830	0.772
PE99	0.294	1.78	16.1	16.1	Urban	0.077	0.21	0.25	4.90	0.28	33	Tc (Hrs)	1.500*	1.500*	1.500*	1.500*	1.450*	1.362*
												Vel (f/s)	1.74	1.74	1.74	1.74	1.80	1.92
												R (Hrs)	1.849	1.849	1.849	1.849	1.781	1.662
PENR	0.197	0.72	8.3	8.3	Urban	0.070	0.10	0.25	4.70	0.28	70	Tc (Hrs)	1.175*	1.175*	1.143*	1.054*	0.998*	0.950*
												Vel (f/s)	0.90	0.90	0.92	1.00	1.06	1.11
												R (Hrs)	0.859	0.859	0.833	0.761	0.717	0.678
PP03	0.325	1.13	14.9	14.9	Urban	0.092	0.30	0.25	4.45	0.38	15	Tc (Hrs)	1.500*	1.500*	1.500*	1.500*	1.410*	1.316*
												Vel (f/s)	1.10	1.10	1.10	1.10	1.18	1.26
												R (Hrs)	1.214	1.214	1.214	1.214	1.134	1.050
PP07	0.195	0.77	66.5	66.5	Urban	0.097	0.27	0.27	5.30	0.24	13	Tc (Hrs)	0.919*	0.919*	0.883	0.787	0.727	0.676
												Vel (f/s)	1.23	1.23	1.28	1.43	1.55	1.67
												R (Hrs)	0.694	0.694	0.664	0.584	0.535	0.493
PP67	0.096	0.73	33.6	33.6	URBAN	0.105	0.30	0.25	4.55	0.41	6	Tc (Hrs)	1.277*	1.277*	1.212*	1.065*	0.981*	0.912
												Vel (f/s)	0.84	0.84	0.88	1.01	1.09	1.17
												R (Hrs)	1.434	1.434	1.354	1.173	1.071	0.988

* Non default value or value out of range

Area ID	Sub Basin Parameters: Area (sq mi)	Length (mi)	Slope (ft/mi)	Adj Slope	Time-Area	Kb	Rainfall Losses: IA (in)	DTHETA	PSIF (in)	XKSAT (in/hr)	RTIMP (%)		Return Period Parameters: 2 Yr	5 Yr	10 Yr	25 Yr	50 Yr	100 Yr
Major Basin ID: GP																		
PP73	0.545	1.26	40.0	40.0	Urban	0.086	0.29	0.25	4.70	0.31	18	Tc (Hrs)	1.302*	1.302*	1.251*	1.117*	1.036*	0.964*
												Vel (f/s)	1.42	1.42	1.48	1.65	1.78	1.92
												R (Hrs)	0.843	0.843	0.806	0.712	0.654	0.604
PP75	0.420	1.21	44.8	44.8	Urban	0.069	0.26	0.26	4.25	0.42	30	Tc (Hrs)	1.057*	1.057*	1.017*	0.918*	0.858	0.807
												Vel (f/s)	1.68	1.68	1.75	1.93	2.07	2.20
												R (Hrs)	0.751	0.751	0.720	0.642	0.596	0.557
PP77	0.270	1.17	29.2	29.2	Urban	0.094	0.30	0.25	4.20	0.45	14	Tc (Hrs)	1.500*	1.500*	1.460*	1.294*	1.198*	1.119*
												Vel (f/s)	1.14	1.14	1.18	1.33	1.43	1.53
												R (Hrs)	1.388	1.388	1.346	1.178	1.082	1.003
PP81	0.197	0.57	36.4	36.4	Urban	0.097	0.30	0.25	6.00	0.18	15	Tc (Hrs)	0.926*	0.926*	0.890	0.791	0.731	0.684
												Vel (f/s)	0.90	0.90	0.94	1.06	1.14	1.22
												R (Hrs)	0.547	0.547	0.523	0.459	0.421	0.391
PP87	0.981	1.03	90.8	90.8	Urban	0.080	0.30	0.25	4.45	0.38	15	Tc (Hrs)	0.994*	0.994*	0.947*	0.830	0.755	0.694
												Vel (f/s)	1.52	1.52	1.60	1.82	2.00	2.18
												R (Hrs)	0.381	0.381	0.361	0.311	0.280	0.255
PP91	0.161	0.75	27.0	27.0	Urban	0.100	0.30	0.25	4.20	0.44	15	Tc (Hrs)	1.283*	1.283*	1.224*	1.088*	1.008*	0.942*
												Vel (f/s)	0.86	0.86	0.90	1.01	1.09	1.17
												R (Hrs)	1.097	1.097	1.042	0.914	0.840	0.779
PPAF	0.270	0.96	77.8	77.8	Urban	0.026	0.15	0.25	4.20	0.36	80	Tc (Hrs)	0.398	0.398	0.387	0.359	0.341	0.325
												Vel (f/s)	3.54	3.54	3.64	3.92	4.13	4.33
												R (Hrs)	0.271	0.271	0.264	0.242	0.229	0.217
PPLP	0.885	2.00	45.9	45.9	Urban	0.062	0.23	0.25	4.35	0.38	37	Tc (Hrs)	1.287*	1.287*	1.242*	1.120*	1.040*	0.973*
												Vel (f/s)	2.28	2.28	2.36	2.62	2.82	3.01
												R (Hrs)	0.914	0.914	0.879	0.784	0.721	0.670
PPNR	0.237	1.12	26.8	26.8	URBAN	0.095	0.18	0.31	3.53	0.53	6	Tc (Hrs)	1.500*	1.500*	1.500*	1.370*	1.261*	1.173*
												Vel (f/s)	1.10	1.10	1.10	1.20	1.30	1.40
												R (Hrs)	1.444	1.444	1.444	1.305	1.191	1.099

* Non default value or value out of range

Area ID	Sub Basin Parameters: Area (sq mi)	Length (mi)	Slope (ft/mi)	Adj Slope	Time-Area	Kb	Rainfall Losses: IA (in)	DTHETA	PSIF (in)	XKSAT (in/hr)	RTIMP (%)		Return Period Parameters: 2 Yr	5 Yr	10 Yr	25 Yr	50 Yr	100 Yr
Major Basin ID: GP																		
RG07	0.350	1.09	16.0	16.0	Urban	0.081	0.23	0.25	4.55	0.31	35	Tc (Hrs)	1.427*	1.427*	1.380*	1.251*	1.171*	1.100*
												Vel (f/s)	1.12	1.12	1.16	1.28	1.37	1.45
												R (Hrs)	1.070	1.070	1.031	0.925	0.859	0.802
RG93	0.248	0.83	19.1	19.1	Urban	0.095	0.25	0.25	4.60	0.30	30	Tc (Hrs)	1.303*	1.303*	1.258*	1.137*	1.062*	0.995*
												Vel (f/s)	0.93	0.93	0.97	1.07	1.15	1.22
												R (Hrs)	0.947	0.947	0.911	0.814	0.754	0.702
RGAF	0.332	1.30	31.0	31.0	Urban	0.092	0.16	0.33	6.20	0.14	12	Tc (Hrs)	1.406*	1.406*	1.351*	1.197*	1.111*	1.043*
												Vel (f/s)	1.36	1.36	1.41	1.59	1.72	1.83
												R (Hrs)	1.249	1.249	1.195	1.045	0.962	0.897
RGLP	0.410	1.09	16.5	16.5	Urban	0.076	0.22	0.25	4.35	0.34	42	Tc (Hrs)	1.340*	1.340*	1.297*	1.181*	1.110*	1.046*
												Vel (f/s)	1.19	1.19	1.23	1.35	1.44	1.53
												R (Hrs)	0.912	0.912	0.880	0.793	0.740	0.692
RO99	0.414	1.52	12.0	12.0	Urban	0.076	0.20	0.22	4.70	0.26	38	Tc (Hrs)	1.500*	1.500*	1.500*	1.500*	1.421*	1.341*
												Vel (f/s)	1.49	1.49	1.49	1.49	1.57	1.66
												R (Hrs)	1.341	1.341	1.341	1.341	1.263	1.185
TB35	0.976	1.97	11.6	11.6	Urban	0.071	0.23	0.15	7.60	0.08	36	Tc (Hrs)	1.500*	1.500*	1.500*	1.500*	1.500*	1.465*
												Vel (f/s)	1.93	1.93	1.93	1.93	1.93	1.97
												R (Hrs)	1.012	1.012	1.012	1.012	1.012	0.986
TB43	0.995	2.00	19.0	19.0	Urban	0.078	0.26	0.15	7.30	0.10	25	Tc (Hrs)	1.500*	1.500*	1.500*	1.500*	1.427*	1.352*
												Vel (f/s)	1.96	1.96	1.96	1.96	2.06	2.17
												R (Hrs)	1.013	1.013	1.013	1.013	0.958	0.903
TB51	0.990	1.99	19.9	19.9	Urban	0.076	0.27	0.19	6.60	0.15	21	Tc (Hrs)	1.500*	1.500*	1.500*	1.500*	1.437*	1.352*
												Vel (f/s)	1.95	1.95	1.95	1.95	2.03	2.16
												R (Hrs)	1.012	1.012	1.012	1.012	0.965	0.902
TB59	0.995	2.00	15.6	15.6	Urban	0.065	0.22	0.23	6.20	0.15	43	Tc (Hrs)	1.500*	1.500*	1.500*	1.479*	1.390*	1.315*
												Vel (f/s)	1.96	1.96	1.96	1.98	2.11	2.23
												R (Hrs)	1.013	1.013	1.013	0.998	0.931	0.876

* Non default value or value out of range

Area ID	Sub Basin Parameters: Area (sq mi)	Length (mi)	Slope (ft/mi)	Adj Slope	Time-Area	Kb	Rainfall Losses: IA (in)	DTHETA	PSIF (in)	XKSAT (in/hr)	RTIMP (%)		Return Period Parameters: 2 Yr	5 Yr	10 Yr	25 Yr	50 Yr	100 Yr
Major Basin ID: GP																		
TB99	0.976	1.66	20.2	20.2	Urban	0.073	0.23	0.25	5.80	0.18	30	Tc (Hrs)	1.500*	1.500*	1.500*	1.377*	1.284*	1.208*
												Vel (f/s)	1.62	1.62	1.62	1.77	1.90	2.02
												R (Hrs)	0.883	0.883	0.883	0.803	0.742	0.694
TBNR	1.123	1.39	14.8	14.8	Urban	0.064	0.19	0.24	4.65	0.30	31	Tc (Hrs)	1.500*	1.500*	1.500*	1.347*	1.248*	1.170*
												Vel (f/s)	1.36	1.36	1.36	1.51	1.63	1.74
												R (Hrs)	0.707	0.707	0.707	0.627	0.576	0.537
TL07	0.580	1.58	25.0	25.0	Urban	0.068	0.21	0.25	5.00	0.29	27	Tc (Hrs)	1.425*	1.425*	1.374*	1.236*	1.148*	1.074*
												Vel (f/s)	1.63	1.63	1.69	1.87	2.02	2.16
												R (Hrs)	1.078	1.078	1.035	0.921	0.848	0.788
UH07	0.252	1.31	11.7	11.7	Urban	0.070	0.20	0.25	4.80	0.34	22	Tc (Hrs)	1.500*	1.500*	1.500*	1.465*	1.365*	1.276*
												Vel (f/s)	1.28	1.28	1.28	1.31	1.41	1.51
												R (Hrs)	1.580	1.580	1.580	1.539	1.423	1.320
UH15	1.019	1.53	25.2	25.2	Urban	0.060	0.20	0.25	5.80	0.16	47	Tc (Hrs)	1.220*	1.220*	1.177*	1.066*	1.003*	0.950*
												Vel (f/s)	1.84	1.84	1.91	2.11	2.24	2.36
												R (Hrs)	0.641	0.641	0.616	0.552	0.516	0.486
UH35	1.136	2.10	26.6	26.6	Urban	0.058	0.20	0.13	10.10	0.03	51	Tc (Hrs)	1.268*	1.268*	1.233*	1.141*	1.084*	1.034*
												Vel (f/s)	2.43	2.43	2.50	2.70	2.84	2.98
												R (Hrs)	0.811	0.811	0.786	0.721	0.681	0.647
UH43	1.025	2.00	21.3	21.3	Urban	0.076	0.26	0.17	7.30	0.11	18	Tc (Hrs)	1.500*	1.500*	1.500*	1.481*	1.384*	1.307*
												Vel (f/s)	1.96	1.96	1.96	1.98	2.12	2.24
												R (Hrs)	0.996	0.996	0.996	0.982	0.911	0.855
UH51	0.990	1.98	16.7	16.7	Urban	0.075	0.23	0.26	4.60	0.29	37	Tc (Hrs)	1.500*	1.500*	1.500*	1.500*	1.500*	1.442*
												Vel (f/s)	1.94	1.94	1.94	1.94	1.94	2.01
												R (Hrs)	1.008	1.008	1.008	1.008	1.008	0.965
UH75	0.814	1.75	2.7	2.7	Urban	0.064	0.22	0.15	7.30	0.11	29	Tc (Hrs)	1.500*	1.500*	1.500*	1.500*	1.500*	1.500*
												Vel (f/s)	1.71	1.71	1.71	1.71	1.71	1.71
												R (Hrs)	1.021	1.021	1.021	1.021	1.021	1.021

* Non default value or value out of range

Area ID	Sub Basin Parameters: Area (sq mi)	Length (mi)	Slope (ft/mi)	Adj Slope	Time-Area	Kb	Rainfall Losses: IA (in)	DTHETA	PSIF (in)	XKSAT (in/hr)	RTIMP (%)		Return Period Parameters: 2 Yr	5 Yr	10 Yr	25 Yr	50 Yr	100 Yr
Major Basin ID: GP																		
UH87	0.998	1.36	24.7	24.7	Urban	0.064	0.21	0.15	7.60	0.10	26	Tc (Hrs)	1.185*	1.185*	1.143*	1.036*	0.975*	0.925*
												Vel (f/s)	1.68	1.68	1.75	1.93	2.05	2.16
												R (Hrs)	0.572	0.572	0.549	0.493	0.461	0.435
UH91	0.929	2.03	13.5	13.5	Urban	0.066	0.21	0.25	4.80	0.31	27	Tc (Hrs)	1.500*	1.500*	1.500*	1.500*	1.500*	1.491*
												Vel (f/s)	1.98	1.98	1.98	1.98	1.98	2.00
												R (Hrs)	1.066	1.066	1.066	1.066	1.066	1.059
UH99	0.563	1.50	14.6	14.6	Urban	0.086	0.25	0.15	7.00	0.10	35	Tc (Hrs)	1.500*	1.500*	1.500*	1.447*	1.363*	1.294*
												Vel (f/s)	1.47	1.47	1.47	1.52	1.61	1.70
												R (Hrs)	1.114	1.114	1.114	1.070	1.001	0.945
UHAF	0.489	1.63	14.9	14.9	Urban	0.075	0.15	0.30	3.50	0.54	12	Tc (Hrs)	1.500*	1.500*	1.500*	1.500*	1.500*	1.469*
												Vel (f/s)	1.59	1.59	1.59	1.59	1.59	1.63
												R (Hrs)	1.290	1.290	1.290	1.290	1.290	1.260
UHLO	0.822	1.22	21.2	21.2	Urban	0.068	0.21	0.25	5.80	0.19	31	Tc (Hrs)	1.298*	1.298*	1.246*	1.112*	1.037*	0.976*
												Vel (f/s)	1.38	1.38	1.44	1.61	1.73	1.83
												R (Hrs)	0.648	0.648	0.619	0.546	0.505	0.472
UHNR	0.386	1.23	25.9	25.9	Urban	0.073	0.16	0.28	4.60	0.28	42	Tc (Hrs)	1.200*	1.200*	1.161*	1.058*	0.992*	0.936*
												Vel (f/s)	1.50	1.50	1.55	1.71	1.82	1.93
												R (Hrs)	0.920	0.920	0.887	0.800	0.745	0.698
WL59	0.562	1.64	37.4	37.4	Urban	0.086	0.17	0.32	4.70	0.29	22	Tc (Hrs)	1.485*	1.485*	1.430*	1.283*	1.191*	1.111*
												Vel (f/s)	1.62	1.62	1.68	1.87	2.02	2.17
												R (Hrs)	1.184	1.184	1.136	1.006	0.927	0.858
WL75	0.475	1.18	30.9	30.9	Urban	0.072	0.29	0.25	4.70	0.31	25	Tc (Hrs)	1.196*	1.196*	1.152*	1.036*	0.966*	0.903
												Vel (f/s)	1.45	1.45	1.50	1.67	1.79	1.92
												R (Hrs)	0.787	0.787	0.755	0.672	0.622	0.577
WL83	0.125	0.74	21.9	21.9	Urban	0.102	0.30	0.10	11.20	0.02	15	Tc (Hrs)	1.063*	1.063*	1.029*	0.943*	0.894	0.852
												Vel (f/s)	1.02	1.02	1.05	1.15	1.21	1.27
												R (Hrs)	1.018	1.018	0.982	0.891	0.840	0.797

* Non default value or value out of range

Area ID	Sub Basin Parameters: Area (sq mi)	Length (mi)	Slope (ft/mi)	Adj Slope	Time-Area	Kb	Rainfall Losses: IA (in)	DTHETA	PSIF (in)	XKSAT (in/hr)	RTIMP (%)		Return Period Parameters: 2 Yr	5 Yr	10 Yr	25 Yr	50 Yr	100 Yr
Major Basin ID: GP																		
WLNR	0.390	1.03	22.7	22.7	Urban	0.071	0.24	0.26	4.70	0.29	33	Tc (Hrs)	1.171*	1.171*	1.131*	1.024*	0.957*	0.899
												Vel (f/s)	1.29	1.29	1.34	1.48	1.58	1.68
												R (Hrs)	0.772	0.772	0.743	0.665	0.617	0.576
WWBR	0.184	0.64	261.8	246.6	Urban	0.098	0.22	0.19	7.00	0.10	26	Tc (Hrs)	0.487	0.487	0.469	0.425	0.399	0.378
												Vel (f/s)	1.93	1.93	2.00	2.21	2.35	2.48
												R (Hrs)	0.306	0.306	0.293	0.263	0.245	0.231
WWLP	0.136	0.38	307.0	265.8	Urban	0.083	0.20	0.17	7.00	0.10	44	Tc (Hrs)	0.323	0.323	0.312	0.286*	0.270*	0.257*
												Vel (f/s)	1.73	1.73	1.79	1.95	2.06	2.17
												R (Hrs)	0.152	0.152	0.146	0.133	0.124	0.118
WWRS	0.144	0.76	65.8	65.8	Urban	0.069	0.20	0.26	4.30	0.44	32	Tc (Hrs)	0.734	0.734	0.707	0.640	0.599	0.564
												Vel (f/s)	1.52	1.52	1.58	1.74	1.86	1.98
												R (Hrs)	0.636	0.636	0.610	0.546	0.508	0.474
YLLP	0.595	1.53	118.9	118.9	Urban	0.080	0.25	0.26	4.35	0.38	34	Tc (Hrs)	0.938*	0.938*	0.905	0.818	0.766	0.718
												Vel (f/s)	2.39	2.39	2.48	2.74	2.93	3.13
												R (Hrs)	0.651	0.651	0.626	0.559	0.520	0.484

* Non default value or value out of range

Existing Land Use by Subbasin

Sub Basin	Land Use Code	Area (sq mi)	AreaInitial Loss (IA) (%)		Percent Impervious (RTIMP)	Vegetable Cover (%)	DTHETA	Kb
Major Basin ID: GP								
83RS	140	0.336	52.7	0.25	30	15.0	NORMAL	0.085
	730	0.301	47.3	0.10	0	5.0	DRY	0.085
		0.638	**100.0**					
AC35	140	0.145	19.2	0.25	30	15.0	NORMAL	0.083
	190	0.129	17.1	0.25	45	5.0	NORMAL	0.083
	200	0.064	8.5	0.10	80	5.0	NORMAL	0.023
	250	0.395	52.3	0.10	85	0.0	NORMAL	0.023
	555	0.003	0.3	0.10	5	0.0	DRY	0.023
	610	0.020	2.7	0.10	80	5.0	NORMAL	0.023
		0.755	**100.1**					
AC43	140	0.294	81.1	0.25	30	15.0	NORMAL	0.091
	200	0.051	14.0	0.10	80	5.0	NORMAL	0.025
	520	0.018	4.8	0.29	40	40.0	NORMAL	0.025
		0.362	**99.9**					
AC51	130	0.001	0.2	0.30	15	30.0	NORMAL	0.086
	140	0.486	84.3	0.25	30	15.0	NORMAL	0.086
	180	0.000		0.25	45	5.0	NORMAL	0.086
	200	0.055	9.5	0.10	80	5.0	NORMAL	0.024
	400	0.001	0.1	0.10	80	5.0	NORMAL	0.086
	520	0.023	3.9	0.29	40	40.0	NORMAL	0.024
	555	0.001	0.1	0.10	5	0.0	DRY	0.024
	710	0.004	0.7	0.10	5	80.0	NORMAL	0.024
	730	0.007	1.2	0.10	0	5.0	DRY	0.086
		0.577	**100.0**					
AC59	140	0.003	0.4	0.25	30	15.0	NORMAL	0.083
	150	0.289	38.9	0.25	30	15.0	NORMAL	0.083
	170	0.044	6.0	0.25	45	10.0	NORMAL	0.083
	190	0.070	9.4	0.25	45	5.0	NORMAL	0.083
	200	0.057	7.7	0.10	80	5.0	NORMAL	0.023
	400	0.017	2.2	0.10	80	5.0	NORMAL	0.083
	530	0.098	13.2	0.10	80	5.0	NORMAL	0.083
	710	0.161	21.7	0.10	5	80.0	NORMAL	0.023
	900	0.004	0.6	0.30	0	5.0	DRY	0.043
		0.742	**100.1**					
AC67	130	0.013	1.8	0.30	15	30.0	NORMAL	0.084
	140	0.431	61.8	0.25	30	15.0	NORMAL	0.084
	150	0.019	2.7	0.25	30	15.0	NORMAL	0.084
	170	0.013	1.8	0.25	45	10.0	NORMAL	0.084
	190	0.050	7.1	0.25	45	5.0	NORMAL	0.084
	200	0.023	3.3	0.10	80	5.0	NORMAL	0.023
	400	0.002	0.3	0.10	80	5.0	NORMAL	0.084
	520	0.023	3.3	0.29	40	40.0	NORMAL	0.023
	550	0.000		0.10	80	10.0	NORMAL	0.023
	710	0.125	17.9	0.10	5	80.0	NORMAL	0.023
	900	0.000		0.30	0	5.0	DRY	0.044
		0.698	**100.0**					
AC75	130	0.000		0.30	15	30.0	NORMAL	0.082
	140	0.028	3.3	0.25	30	15.0	NORMAL	0.082
	150	0.413	49.0	0.25	30	15.0	NORMAL	0.082
	170	0.026	3.1	0.25	45	10.0	NORMAL	0.082
	180	0.045	5.3	0.25	45	5.0	NORMAL	0.082
	190	0.032	3.8	0.25	45	5.0	NORMAL	0.082
	200	0.042	4.9	0.10	80	5.0	NORMAL	0.023
	240	0.001	0.1	0.10	85	5.0	NORMAL	0.023

Sub Basin	Land Use Code	Area (sq mi)	AreaInitial Loss (IA) (%)		Percent Impervious (RTIMP)	Vegetable Cover (%)	DTHETA	Kb
Major Basin ID: GP								
AC75	400	0.018	2.1	0.10	80	5.0	NORMAL	0.082
	520	0.000		0.29	40	40.0	NORMAL	0.023
	555	0.009	1.0	0.10	5	0.0	DRY	0.023
	710	0.142	16.8	0.10	5	80.0	NORMAL	0.023
	730	0.005	0.6	0.10	0	5.0	DRY	0.082
	740	0.011	1.2	0.00	0	0.0	WET	0.023
	900	0.072	8.5	0.30	0	5.0	DRY	0.042
		0.842	**99.7**					
AF11	320	0.328	87.5	0.15	80	0.0	NORMAL	0.025
	730	0.047	12.5	0.10	0	5.0	DRY	0.090
		0.375	**100.0**					
BL15	140	0.385	40.0	0.25	30	15.0	NORMAL	0.080
	150	0.254	26.4	0.25	30	15.0	NORMAL	0.080
	190	0.003	0.3	0.25	45	5.0	NORMAL	0.080
	400	0.024	2.5	0.10	80	5.0	NORMAL	0.080
	530	0.010	1.1	0.10	80	5.0	NORMAL	0.080
	720	0.117	12.1	0.10	5	90.0	NORMAL	0.023
	730	0.000		0.10	0	5.0	DRY	0.080
	900	0.119	12.4	0.30	0	5.0	DRY	0.042
	950	0.050	5.2	0.30	0	5.0	DRY	0.042
		0.962	**100.0**					
BL35	150	0.765	67.1	0.25	30	15.0	NORMAL	0.078
	180	0.079	7.0	0.25	45	5.0	NORMAL	0.078
	190	0.035	3.1	0.25	45	5.0	NORMAL	0.078
	200	0.118	10.4	0.10	80	5.0	NORMAL	0.022
	320	0.079	6.9	0.15	80	0.0	NORMAL	0.022
	520	0.026	2.3	0.29	40	40.0	NORMAL	0.022
	610	0.037	3.2	0.10	80	5.0	NORMAL	0.022
		1.139	**100.0**					
BL43	120	0.000		0.30	5	50.0	NORMAL	0.079
	150	0.932	88.8	0.25	30	15.0	NORMAL	0.079
	180	0.048	4.5	0.25	45	5.0	NORMAL	0.079
	200	0.046	4.4	0.10	80	5.0	NORMAL	0.022
	520	0.024	2.3	0.29	40	40.0	NORMAL	0.022
		1.049	**100.0**					
BL51	150	0.791	75.7	0.25	30	15.0	NORMAL	0.079
	180	0.000		0.25	45	5.0	NORMAL	0.079
	200	0.058	5.6	0.10	80	5.0	NORMAL	0.022
	400	0.027	2.6	0.10	80	5.0	NORMAL	0.079
	520	0.023	2.2	0.29	40	40.0	NORMAL	0.022
	720	0.146	14.0	0.10	5	90.0	NORMAL	0.022
		1.045	**100.1**					
BL59	130	0.000		0.30	15	30.0	NORMAL	0.079
	140	0.216	20.1	0.25	30	15.0	NORMAL	0.079
	150	0.477	44.4	0.25	30	15.0	NORMAL	0.079
	180	0.009	0.8	0.25	45	5.0	NORMAL	0.079
	200	0.151	14.0	0.10	80	5.0	NORMAL	0.022
	400	0.016	1.5	0.10	80	5.0	NORMAL	0.079
	520	0.154	14.3	0.29	40	40.0	NORMAL	0.022
	710	0.021	1.9	0.10	5	80.0	NORMAL	0.022
	730	0.000		0.10	0	5.0	DRY	0.079
	810	0.000		0.10	80	5.0	NORMAL	0.079
	900	0.032	2.9	0.30	0	5.0	DRY	0.041

Major Basin ID: GP

Sub Basin	Land Use Code	Area (sq mi)	AreaInitial Loss (IA) (%)		Percent Impervious (RTIMP)	Vegetable Cover (%)	DTHETA	Kb
		1.075	**99.9**					
BL67	120	0.051	21.6	0.30	5	50.0	NORMAL	0.096
	130	0.017	7.1	0.30	15	30.0	NORMAL	0.096
	140	0.004	1.7	0.25	30	15.0	NORMAL	0.096
	150	0.000	0.1	0.25	30	15.0	NORMAL	0.096
	180	0.000		0.25	45	5.0	NORMAL	0.096
	200	0.107	46.0	0.10	80	5.0	NORMAL	0.026
	400	0.015	6.4	0.10	80	5.0	NORMAL	0.096
	555	0.001	0.2	0.10	5	0.0	DRY	0.026
	900	0.039	16.8	0.30	0	5.0	DRY	0.050
		0.233	**99.9**					
BL75	130	0.721	67.8	0.30	15	30.0	NORMAL	0.079
	150	0.002	0.2	0.25	30	15.0	NORMAL	0.079
	190	0.026	2.5	0.25	45	5.0	NORMAL	0.079
	200	0.152	14.3	0.10	80	5.0	NORMAL	0.022
	240	0.030	2.8	0.10	85	5.0	NORMAL	0.022
	400	0.002	0.2	0.10	80	5.0	NORMAL	0.079
	520	0.001	0.1	0.29	40	40.0	NORMAL	0.022
	710	0.000		0.10	5	80.0	NORMAL	0.022
	730	0.063	5.9	0.10	0	5.0	DRY	0.079
	810	0.065	6.1	0.10	80	5.0	NORMAL	0.079
		1.063	**99.9**					
BL91	140	0.249	27.7	0.25	30	15.0	NORMAL	0.081
	150	0.080	8.9	0.25	30	15.0	NORMAL	0.081
	180	0.187	20.8	0.25	45	5.0	NORMAL	0.081
	200	0.000		0.10	80	5.0	NORMAL	0.023
	220	0.001	0.1	0.10	75	10.0	NORMAL	0.023
	240	0.296	32.8	0.10	85	5.0	NORMAL	0.023
	520	0.001	0.1	0.29	40	40.0	NORMAL	0.023
	530	0.034	3.7	0.10	80	5.0	NORMAL	0.081
	710	0.016	1.8	0.10	5	80.0	NORMAL	0.023
	900	0.038	4.2	0.30	0	5.0	DRY	0.042
		0.901	**100.1**					
BL99	140	0.678	59.9	0.25	30	15.0	NORMAL	0.078
	180	0.002	0.2	0.25	45	5.0	NORMAL	0.078
	190	0.200	17.6	0.25	45	5.0	NORMAL	0.078
	220	0.120	10.6	0.10	75	10.0	NORMAL	0.022
	400	0.012	1.0	0.10	80	5.0	NORMAL	0.078
	520	0.020	1.7	0.29	40	40.0	NORMAL	0.022
	550	0.004	0.3	0.10	80	10.0	NORMAL	0.022
	720	0.099	8.7	0.10	5	90.0	NORMAL	0.022
		1.133	**100.0**					
BLAF	150	0.141	49.9	0.25	30	15.0	NORMAL	0.094
	720	0.053	18.5	0.10	5	90.0	NORMAL	0.026
	730	0.090	31.6	0.10	0	5.0	DRY	0.094
		0.283	**100.0**					
BLLO	130	0.215	28.1	0.30	15	30.0	NORMAL	0.083
	150	0.000		0.25	30	15.0	NORMAL	0.083
	190	0.130	17.0	0.25	45	5.0	NORMAL	0.083
	200	0.200	26.2	0.10	80	5.0	NORMAL	0.023
	250	0.135	17.6	0.10	85	0.0	NORMAL	0.023
	400	0.041	5.4	0.10	80	5.0	NORMAL	0.083
	530	0.000		0.10	80	5.0	NORMAL	0.083
	610	0.023	3.0	0.10	80	5.0	NORMAL	0.023

* Non default value

Major Basin ID: GP

Sub Basin	Land Use Code	Area (sq mi)	AreaInitial Loss (IA) (%)		Percent Impervious (RTIMP)	Vegetable Cover (%)	DTHETA	Kb
BLLO	710	0.021	2.7	0.10	5	80.0	NORMAL	0.023
		0.765	**100.0**					
BLNR	140	0.256	42.4	0.25	30	15.0	NORMAL	0.085
	190	0.026	4.4	0.25	45	5.0	NORMAL	0.085
	200	0.129	21.5	0.10	80	5.0	NORMAL	0.024
	240	0.015	2.4	0.10	85	5.0	NORMAL	0.024
	520	0.039	6.4	0.29	40	40.0	NORMAL	0.024
	610	0.057	9.5	0.10	80	5.0	NORMAL	0.024
	730	0.081	13.4	0.10	0	5.0	DRY	0.085
	810	0.000		0.10	80	5.0	NORMAL	0.085
		0.603	**100.0**					
BN99	140	0.614	59.1	0.25	30	15.0	NORMAL	0.079
	190	0.144	13.9	0.25	45	5.0	NORMAL	0.079
	220	0.041	4.0	0.10	75	10.0	NORMAL	0.022
	240	0.000		0.10	85	5.0	NORMAL	0.022
	530	0.066	6.4	0.10	80	5.0	NORMAL	0.079
	550	0.015	1.4	0.10	80	10.0	NORMAL	0.022
	720	0.150	14.5	0.10	5	90.0	NORMAL	0.022
	740	0.007	0.7	0.00	0	0.0	WET	0.022
		1.038	**100.0**					
BY07	140	0.341	66.5	0.25	30	15.0	NORMAL	0.087
	180	0.058	11.2	0.25	45	5.0	NORMAL	0.087
	200	0.047	9.1	0.10	80	5.0	NORMAL	0.024
	520	0.023	4.5	0.29	40	40.0	NORMAL	0.024
	730	0.008	1.6	0.10	0	5.0	DRY	0.087
	740	0.009	1.8	0.00	0	0.0	WET	0.024
	900	0.026	5.1	0.30	0	5.0	DRY	0.045
	950	0.001	0.1	0.30	0	5.0	DRY	0.045
		0.513	**99.9**					
BY87	140	0.691	72.1	0.25	30	15.0	NORMAL	0.080
	180	0.020	2.1	0.25	45	5.0	NORMAL	0.080
	200	0.056	5.9	0.10	80	5.0	NORMAL	0.023
	520	0.127	13.3	0.29	40	40.0	NORMAL	0.023
	555	0.003	0.3	0.10	5	0.0	DRY	0.023
	710	0.061	6.4	0.10	5	80.0	NORMAL	0.023
		0.959	**100.1**					
BY91	140	0.450	89.8	0.25	30	15.0	NORMAL	0.087
	710	0.051	10.2	0.10	5	80.0	NORMAL	0.024
		0.501	**100.0**					
BYAF	140	0.220	36.2	0.25	30	15.0	NORMAL	0.085
	150	0.000		0.25	30	15.0	NORMAL	0.085
	320	0.097	16.0	0.15	80	0.0	NORMAL	0.024
	555	0.001	0.1	0.10	5	0.0	DRY	0.024
	720	0.031	5.0	0.10	5	90.0	NORMAL	0.024
	730	0.029	4.8	0.10	0	5.0	DRY	0.085
	740	0.016	2.7	0.00	0	0.0	WET	0.024
	750	0.001	0.1	0.50	0	85.0	NORMAL	0.044
	900	0.213	35.0	0.30	0	5.0	DRY	0.044
		0.609	**99.9**					
BYNR	130	0.185	17.9	0.30	15	30.0	NORMAL	0.079
	140	0.611	59.1	0.25	30	15.0	NORMAL	0.079
	150	0.000		0.25	30	15.0	NORMAL	0.079
	180	0.000		0.25	45	5.0	NORMAL	0.079

* Non default value

Sub Basin	Land Use Code	Area (sq mi)	AreaInitial Loss (IA) (%)		Percent Impervious (RTIMP)	Vegetable Cover (%)	DTHETA	Kb
Major Basin ID: GP								
BYNR	190	0.000		0.25	45	5.0	NORMAL	0.079
	200	0.039	3.8	0.10	80	5.0	NORMAL	0.022
	320	0.000		0.15	80	0.0	NORMAL	0.022
	400	0.020	2.0	0.10	80	5.0	NORMAL	0.079
	520	0.001	0.1	0.29	40	40.0	NORMAL	0.022
	555	0.003	0.2	0.10	5	0.0	DRY	0.022
	610	0.023	2.3	0.10	80	5.0	NORMAL	0.022
	730	0.152	14.7	0.10	0	5.0	DRY	0.079
		1.034	**100.1**					
CL07	130	0.000	0.1	0.30	15	30.0	NORMAL	0.087
	140	0.206	39.3	0.25	30	15.0	NORMAL	0.087
	240	0.030	5.6	0.10	85	5.0	NORMAL	0.024
	730	0.199	38.0	0.10	0	5.0	DRY	0.087
	900	0.050	9.5	0.30	0	5.0	DRY	0.045
	950	0.039	7.5	0.30	0	5.0	DRY	0.045
		0.524	**100.0**					
CL57	130	0.381	51.1	0.30	15	30.0	NORMAL	0.083
	150	0.034	4.5	0.25	30	15.0	NORMAL	0.083
	180	0.011	1.4	0.25	45	5.0	NORMAL	0.083
	520	0.025	3.4	0.29	40	40.0	NORMAL	0.023
	550	0.058	7.7	0.10	80	10.0	NORMAL	0.023
	730	0.238	31.9	0.10	0	5.0	DRY	0.083
		0.746	**100.0**					
CL67	120	0.125	45.3	0.30	5	50.0	NORMAL	0.094
	130	0.008	2.8	0.30	15	30.0	NORMAL	0.094
	180	0.050	18.3	0.25	45	5.0	NORMAL	0.094
	200	0.026	9.3	0.10	80	5.0	NORMAL	0.026
	230	0.002	0.6	0.10	85	5.0	NORMAL	0.026
	730	0.065	23.7	0.10	0	5.0	DRY	0.094
		0.275	**100.0**					
CL77	130	0.121	38.3	0.30	15	30.0	NORMAL	0.092
	730	0.095	30.1	0.10	0	5.0	DRY	0.092
	900	0.023	7.3	0.30	0	5.0	DRY	0.048
	950	0.077	24.3	0.30	0	5.0	DRY	0.048
		0.316	**100.0**					
CLAF	320	0.000		0.15	80	0.0	NORMAL	0.026
	730	0.171	59.1	0.10	0	5.0	DRY	0.093
	900	0.096	33.1	0.30	0	5.0	DRY	0.049
	950	0.022	7.8	0.30	0	5.0	DRY	0.049
		0.289	**100.0**					
CT35	140	0.527	54.0	0.25	30	15.0	NORMAL	0.080
	190	0.091	9.3	0.25	45	5.0	NORMAL	0.080
	200	0.121	12.4	0.10	80	5.0	NORMAL	0.023
	320	0.162	16.6	0.15	80	0.0	NORMAL	0.023
	520	0.024	2.4	0.29	40	40.0	NORMAL	0.023
	610	0.027	2.8	0.10	80	5.0	NORMAL	0.023
	900	0.024	2.5	0.30	0	5.0	DRY	0.042
		0.976	**100.0**					
CT43	140	0.779	78.1	0.25	30	15.0	NORMAL	0.080
	180	0.015	1.5	0.25	45	5.0	NORMAL	0.080
	190	0.027	2.7	0.25	45	5.0	NORMAL	0.080
	200	0.095	9.6	0.10	80	5.0	NORMAL	0.022
	320	0.031	3.1	0.15	80	0.0	NORMAL	0.022

Sub Basin	Land Use Code	Area (sq mi)	AreaInitial Loss (IA) (%)		Percent Impervious (RTIMP)	Vegetable Cover (%)	DTHETA	Kb
Major Basin ID: GP								
CT43	520	0.024	2.4	0.29	40	40.0	NORMAL	0.022
	550	0.008	0.8	0.10	80	10.0	NORMAL	0.022
	710	0.017	1.7	0.10	5	80.0	NORMAL	0.022
	900	0.000		0.30	0	5.0	DRY	0.041
		0.997	**99.9**					
CT51	140	0.452	45.8	0.25	30	15.0	NORMAL	0.080
	200	0.043	4.3	0.10	80	5.0	NORMAL	0.022
	520	0.034	3.4	0.29	40	40.0	NORMAL	0.022
	550	0.160	16.2	0.10	80	10.0	NORMAL	0.022
	900	0.299	30.3	0.30	0	5.0	DRY	0.041
		0.988	**100.0**					
DV07	130	0.091	14.1	0.30	15	30.0	NORMAL	0.085
	140	0.524	81.3	0.25	30	15.0	NORMAL	0.085
	730	0.030	4.6	0.10	0	5.0	DRY	0.085
	950	0.000		0.30	0	5.0	DRY	0.044
		0.645	**100.0**					
DV56	140	0.013	4.7	0.25	30	15.0	NORMAL	0.093
	730	0.260	90.5	0.10	0	5.0	DRY	0.093
	740	0.014	4.8	0.00	0	0.0	WET	0.026
		0.287	**100.0**					
DV67	130	0.093	18.5	0.30	15	30.0	NORMAL	0.087
	140	0.152	30.3	0.25	30	15.0	NORMAL	0.087
	150	0.000	0.1	0.25	30	15.0	NORMAL	0.087
	200	0.000		0.10	80	5.0	NORMAL	0.024
	720	0.047	9.3	0.10	5	90.0	NORMAL	0.024
	730	0.211	41.8	0.10	0	5.0	DRY	0.087
		0.503	**100.0**					
DV75	120	0.009	1.9	0.30	5	50.0	NORMAL	0.087
	130	0.000		0.30	15	30.0	NORMAL	0.087
	140	0.071	14.2	0.25	30	15.0	NORMAL	0.087
	150	0.287	57.3	0.25	30	15.0	NORMAL	0.087
	170	0.058	11.6	0.25	45	10.0	NORMAL	0.087
	190	0.003	0.6	0.25	45	5.0	NORMAL	0.087
	200	0.026	5.2	0.10	80	5.0	NORMAL	0.024
	320	0.000		0.15	80	0.0	NORMAL	0.024
	520	0.031	6.3	0.29	40	40.0	NORMAL	0.024
	550	0.000		0.10	80	10.0	NORMAL	0.024
	710	0.014	2.8	0.10	5	80.0	NORMAL	0.024
	730	0.000		0.10	0	5.0	DRY	0.087
		0.501	**99.9**					
DV83	130	0.000	0.2	0.30	15	30.0	NORMAL	0.104
	140	0.106	99.7	0.25	30	15.0	NORMAL	0.104
	200	0.000	0.1	0.10	80	5.0	NORMAL	0.029
		0.107	**100.0**					
DV87	130	1.002	99.8	0.30	15	30.0	NORMAL	0.080
	140	0.002	0.2	0.25	30	15.0	NORMAL	0.080
	200	0.000		0.10	80	5.0	NORMAL	0.022
	730	0.000		0.10	0	5.0	DRY	0.080
		1.004	**100.0**					
DV99	130	0.000		0.30	15	30.0	NORMAL	0.078
	140	0.014	1.1	0.25	30	15.0	NORMAL	0.078
	240	0.012	1.0	0.10	85	5.0	NORMAL	0.022

Sub Basin	Land Use Code	Area (sq mi)	Arealnitial Loss (IA) (%)		Percent Impervious (RTIMP)	Vegetable Cover (%)	DTHETA	Kb
Major Basin ID: GP								
DV99	520	0.090	7.4	0.29	40	40.0	NORMAL	0.022
	730	1.101	90.5	0.10	0	5.0	DRY	0.078
	950	0.000		0.30	0	5.0	DRY	0.040
		1.217	**100.0**					
DVAF	140	0.127	30.7	0.25	30	15.0	NORMAL	0.089
	320	0.000		0.15	80	0.0	NORMAL	0.025
	730	0.286	69.3	0.10	0	5.0	DRY	0.089
		0.412	**100.0**					
DVLP	130	0.000	0.1	0.30	15	30.0	NORMAL	0.102
	140	0.021	15.8	0.25	30	15.0	NORMAL	0.102
	240	0.025	18.7	0.10	85	5.0	NORMAL	0.028
	730	0.089	65.4	0.10	0	5.0	DRY	0.102
	950	0.000	0.1	0.30	0	5.0	DRY	0.053
		0.136	**100.1**					
DVNR	130	0.000	0.1	0.30	15	30.0	NORMAL	0.090
	140	0.330	82.2	0.25	30	15.0	NORMAL	0.090
	150	0.002	0.5	0.25	30	15.0	NORMAL	0.090
	170	0.002	0.4	0.25	45	10.0	NORMAL	0.090
	320	0.038	9.5	0.15	80	0.0	NORMAL	0.025
	400	0.000		0.10	80	5.0	NORMAL	0.090
	730	0.028	6.9	0.10	0	5.0	DRY	0.090
	900	0.001	0.3	0.30	0	5.0	DRY	0.047
		0.401	**99.9**					
DW07	140	0.078	16.1	0.25	30	15.0	NORMAL	0.088
	190	0.205	42.4	0.25	45	5.0	NORMAL	0.088
	200	0.000		0.10	80	5.0	NORMAL	0.024
	220	0.011	2.3	0.10	75	10.0	NORMAL	0.024
	530	0.003	0.6	0.10	80	5.0	NORMAL	0.088
	720	0.187	38.6	0.10	5	90.0	NORMAL	0.024
		0.484	**100.0**					
DW99	140	0.033	21.5	0.25	30	15.0	NORMAL	0.100
	180	0.001	0.4	0.25	45	5.0	NORMAL	0.100
	190	0.053	34.4	0.25	45	5.0	NORMAL	0.100
	220	0.015	9.8	0.10	75	10.0	NORMAL	0.028
	550	0.007	4.7	0.10	80	10.0	NORMAL	0.028
	555	0.008	5.1	0.10	5	0.0	DRY	0.028
	720	0.038	24.2	0.10	5	90.0	NORMAL	0.028
		0.155	**100.1**					
GHAF	320	0.000		0.15	80	0.0	NORMAL	0.024
	550	0.039	6.9	0.10	80	10.0	NORMAL	0.024
	620	0.030	5.2	0.15	55	5.0	NORMAL	0.024
	730	0.495	87.8	0.10	0	5.0	DRY	0.086
	900	0.000		0.30	0	5.0	DRY	0.045
		0.563	**99.9**					
GHNR	620	0.462	54.9	0.15	55	5.0	NORMAL	0.023
	730	0.229	27.2	0.10	0	5.0	DRY	0.082
	750	0.005	0.6	0.50	0	85.0	NORMAL	0.042
	900	0.145	17.3	0.30	0	5.0	DRY	0.042
		0.841	**100.0**					
GL03	140	0.004	0.6	0.25	30	15.0	NORMAL	0.085
	620	0.000		0.15	55	5.0	NORMAL	0.024
	730	0.100	15.5	0.10	0	5.0	DRY	0.085

Sub Basin	Land Use Code	Area (sq mi)	Arealnitial Loss (IA) (%)		Percent Impervious (RTIMP)	Vegetable Cover (%)	DTHETA	Kb
Major Basin ID: GP								
GL03	810	0.315	48.6	0.10	80	5.0	NORMAL	0.085
	900	0.230	35.4	0.30	0	5.0	DRY	0.044
		0.649	**100.1**					
GL11	140	0.002	0.4	0.25	30	15.0	NORMAL	0.089
	150	0.228	53.5	0.25	30	15.0	NORMAL	0.089
	200	0.005	1.2	0.10	80	5.0	NORMAL	0.025
	730	0.006	1.5	0.10	0	5.0	DRY	0.089
	810	0.163	38.4	0.10	80	5.0	NORMAL	0.089
	900	0.021	5.0	0.30	0	5.0	DRY	0.047
		0.426	**100.0**					
GL14	150	0.001	0.2	0.25	30	15.0	NORMAL	0.088
	320	0.003	0.5	0.15	80	0.0	NORMAL	0.024
	730	0.001	0.2	0.10	0	5.0	DRY	0.088
	810	0.000		0.10	80	5.0	NORMAL	0.088
	900	0.477	99.0	0.30	0	5.0	DRY	0.046
		0.481	**99.9**					
GLAF	320	0.314	80.8	0.15	80	0.0	NORMAL	0.025
	730	0.001	0.2	0.10	0	5.0	DRY	0.090
	900	0.074	19.1	0.30	0	5.0	DRY	0.047
		0.388	**100.1**					
GLGH	620	0.000	0.1	0.15	55	5.0	NORMAL	0.029
	730	0.000	0.1	0.10	0	5.0	DRY	0.107
	810	0.001	1.6	0.10	80	5.0	NORMAL	0.107
	900	0.078	98.1	0.30	0	5.0	DRY	0.057
		0.079	**99.9**					
GR99	140	0.781	59.6	0.25	30	15.0	NORMAL	0.077
	190	0.067	5.1	0.25	45	5.0	NORMAL	0.077
	220	0.019	1.4	0.10	75	10.0	NORMAL	0.022
	230	0.096	7.3	0.10	85	5.0	NORMAL	0.022
	400	0.108	8.2	0.10	80	5.0	NORMAL	0.077
	530	0.076	5.8	0.10	80	5.0	NORMAL	0.077
	610	0.031	2.4	0.10	80	5.0	NORMAL	0.022
	720	0.129	9.8	0.10	5	90.0	NORMAL	0.022
	740	0.003	0.2	0.00	0	0.0	WET	0.022
		1.310	**99.8**					
GRAF	140	0.248	28.9	0.25	30	15.0	NORMAL	0.081
	190	0.397	46.2	0.25	45	5.0	NORMAL	0.081
	230	0.010	1.1	0.10	85	5.0	NORMAL	0.023
	530	0.008	0.9	0.10	80	5.0	NORMAL	0.081
	610	0.025	2.9	0.10	80	5.0	NORMAL	0.023
	720	0.077	9.0	0.10	5	90.0	NORMAL	0.023
	730	0.095	11.0	0.10	0	5.0	DRY	0.081
		0.859	**100.0**					
GRNR	140	0.243	25.6	0.25	30	15.0	NORMAL	0.080
	180	0.083	8.7	0.25	45	5.0	NORMAL	0.080
	190	0.068	7.1	0.25	45	5.0	NORMAL	0.080
	220	0.196	20.6	0.10	75	10.0	NORMAL	0.023
	240	0.001	0.1	0.10	85	5.0	NORMAL	0.023
	320	0.006	0.6	0.15	80	0.0	NORMAL	0.023
	610	0.018	1.9	0.10	80	5.0	NORMAL	0.023
	730	0.163	17.2	0.10	0	5.0	DRY	0.080
	810	0.005	0.5	0.10	80	5.0	NORMAL	0.080
	900	0.105	11.1	0.30	0	5.0	DRY	0.042

Sub Basin	Land Use Code	Area (sq mi)	Arealnitial Loss (IA) (%)		Percent Impervious (RTIMP)	Vegetable Cover (%)	DTHETA	Kb
Major Basin ID: GP								
GRNR	950	0.061	6.5	0.30	0	5.0	DRY	0.042
		0.947	**99.9**					
GW35	140	0.231	22.9	0.25	30	15.0	NORMAL	0.080
	150	0.318	31.5	0.25	30	15.0	NORMAL	0.080
	170	0.028	2.8	0.25	45	10.0	NORMAL	0.080
	180	0.000		0.25	45	5.0	NORMAL	0.080
	190	0.053	5.2	0.25	45	5.0	NORMAL	0.080
	200	0.065	6.4	0.10	80	5.0	NORMAL	0.022
	220	0.000		0.10	75	10.0	NORMAL	0.022
	320	0.187	18.5	0.15	80	0.0	NORMAL	0.022
	520	0.046	4.6	0.29	40	40.0	NORMAL	0.022
	610	0.033	3.3	0.10	80	5.0	NORMAL	0.022
	710	0.048	4.8	0.10	5	80.0	NORMAL	0.022
		1.008	**100.0**					
GW43	120	0.125	12.7	0.30	5	50.0	NORMAL	0.080
	140	0.000		0.25	30	15.0	NORMAL	0.080
	150	0.421	42.6	0.25	30	15.0	NORMAL	0.080
	180	0.178	18.0	0.25	45	5.0	NORMAL	0.080
	190	0.023	2.3	0.25	45	5.0	NORMAL	0.080
	200	0.105	10.7	0.10	80	5.0	NORMAL	0.022
	220	0.008	0.8	0.10	75	10.0	NORMAL	0.022
	520	0.115	11.7	0.29	40	40.0	NORMAL	0.022
	900	0.012	1.3	0.30	0	5.0	DRY	0.041
		0.987	**100.1**					
GW51	120	0.493	51.2	0.30	5	50.0	NORMAL	0.080
	150	0.360	37.4	0.25	30	15.0	NORMAL	0.080
	200	0.071	7.4	0.10	80	5.0	NORMAL	0.023
	520	0.020	2.1	0.29	40	40.0	NORMAL	0.023
	710	0.018	1.9	0.10	5	80.0	NORMAL	0.023
		0.962	**100.0**					
GW59	120	0.004	0.4	0.30	5	50.0	NORMAL	0.080
	130	0.359	38.0	0.30	15	30.0	NORMAL	0.080
	150	0.184	19.4	0.25	30	15.0	NORMAL	0.080
	200	0.093	9.9	0.10	80	5.0	NORMAL	0.023
	400	0.000		0.10	80	5.0	NORMAL	0.080
	520	0.019	2.0	0.29	40	40.0	NORMAL	0.023
	710	0.019	2.0	0.10	5	80.0	NORMAL	0.023
	730	0.009	1.0	0.10	0	5.0	DRY	0.080
	810	0.234	24.8	0.10	80	5.0	NORMAL	0.080
	900	0.024	2.5	0.30	0	5.0	DRY	0.042
		0.944	**100.0**					
GW67	130	0.058	6.5	0.30	15	30.0	NORMAL	0.081
	140	0.097	10.9	0.25	30	15.0	NORMAL	0.081
	150	0.438	49.0	0.25	30	15.0	NORMAL	0.081
	180	0.000		0.25	45	5.0	NORMAL	0.081
	190	0.025	2.8	0.25	45	5.0	NORMAL	0.081
	200	0.095	10.6	0.10	80	5.0	NORMAL	0.023
	400	0.032	3.5	0.10	80	5.0	NORMAL	0.081
	520	0.080	8.9	0.29	40	40.0	NORMAL	0.023
	710	0.011	1.2	0.10	5	80.0	NORMAL	0.023
	810	0.000		0.10	80	5.0	NORMAL	0.081
	900	0.040	4.5	0.30	0	5.0	DRY	0.042
	950	0.018	2.0	0.30	0	5.0	DRY	0.042
		0.892	**99.9**					

Sub Basin	Land Use Code	Area (sq mi)	Arealnitial Loss (IA) (%)		Percent Impervious (RTIMP)	Vegetable Cover (%)	DTHETA	Kb
Major Basin ID: GP								
GW91	140	0.316	66.3	0.25	30	15.0	NORMAL	0.088
	150	0.000		0.25	30	15.0	NORMAL	0.088
	240	0.120	25.1	0.10	85	5.0	NORMAL	0.024
	555	0.009	1.9	0.10	5	0.0	DRY	0.024
	720	0.027	5.6	0.10	5	90.0	NORMAL	0.024
	900	0.006	1.2	0.30	0	5.0	DRY	0.046
		0.477	**100.1**					
GWLO	140	0.002	0.2	0.25	30	15.0	NORMAL	0.082
	200	0.015	1.8	0.10	80	5.0	NORMAL	0.023
	240	0.529	64.9	0.10	85	5.0	NORMAL	0.023
	610	0.000		0.10	80	5.0	NORMAL	0.023
	710	0.238	29.3	0.10	5	80.0	NORMAL	0.023
	730	0.019	2.3	0.10	0	5.0	DRY	0.082
	750	0.000		0.50	0	85.0	NORMAL	0.043
	810	0.012	1.4	0.10	80	5.0	NORMAL	0.082
		0.814	**99.9**					
GWNR	140	0.340	48.8	0.25	30	15.0	NORMAL	0.084
	150	0.000		0.25	30	15.0	NORMAL	0.084
	240	0.127	18.2	0.10	85	5.0	NORMAL	0.023
	520	0.026	3.8	0.29	40	40.0	NORMAL	0.023
	610	0.000		0.10	80	5.0	NORMAL	0.023
	710	0.048	6.8	0.10	5	80.0	NORMAL	0.023
	730	0.155	22.2	0.10	0	5.0	DRY	0.084
	810	0.001	0.1	0.10	80	5.0	NORMAL	0.084
		0.697	**99.9**					
HV01	140	0.121	27.3	0.25	30	15.0	NORMAL	0.089
	240	0.140	31.5	0.10	85	5.0	NORMAL	0.025
	730	0.161	36.3	0.10	0	5.0	DRY	0.089
	950	0.022	4.9	0.30	0	5.0	DRY	0.046
		0.444	**100.0**					
HV07	140	0.103	33.7	0.25	30	15.0	NORMAL	0.093
	240	0.003	1.0	0.10	85	5.0	NORMAL	0.026
	730	0.002	0.6	0.10	0	5.0	DRY	0.093
	900	0.003	0.9	0.30	0	5.0	DRY	0.049
	950	0.194	63.8	0.30	0	5.0	DRY	0.049
		0.304	**100.0**					
HV55	130	0.000		0.30	15	30.0	NORMAL	0.072
	140	0.965	47.0	0.25	30	15.0	NORMAL	0.072
	150	0.000		0.25	30	15.0	NORMAL	0.072
	550	0.000		0.10	80	10.0	NORMAL	0.021
	720	0.010	0.5	0.10	5	90.0	NORMAL	0.021
	730	0.805	39.2	0.10	0	5.0	DRY	0.072
	900	0.021	1.0	0.30	0	5.0	DRY	0.037
	950	0.253	12.3	0.30	0	5.0	DRY	0.037
		2.055	**100.0**					
HV67	140	0.113	20.7	0.25	30	15.0	NORMAL	0.086
	150	0.118	21.7	0.25	30	15.0	NORMAL	0.086
	180	0.001	0.1	0.25	45	5.0	NORMAL	0.086
	200	0.027	5.0	0.10	80	5.0	NORMAL	0.024
	230	0.000		0.10	85	5.0	NORMAL	0.024
	730	0.285	52.4	0.10	0	5.0	DRY	0.086
		0.544	**99.9**					
HV75	120	0.015	1.5	0.30	5	50.0	NORMAL	0.080

Sub Basin	Land Use Code	Area (sq mi)	Areainitial Loss (IA) (%)		Percent Impervious (RTIMP)	Vegetable Cover (%)	DTHETA	Kb
Major Basin ID: GP								
HV75	140	0.757	79.0	0.25	30	15.0	NORMAL	0.080
	150	0.004	0.5	0.25	30	15.0	NORMAL	0.080
	200	0.002	0.2	0.10	80	5.0	NORMAL	0.023
	230	0.000		0.10	85	5.0	NORMAL	0.023
	520	0.048	5.0	0.29	40	40.0	NORMAL	0.023
	730	0.113	11.8	0.10	0	5.0	DRY	0.080
	900	0.019	2.0	0.30	0	5.0	DRY	0.042
	950	0.001	0.1	0.30	0	5.0	DRY	0.042
		0.958	**100.1**					
HV83	730	0.035	100.0	0.10	0	5.0	DRY	0.116
		0.035	**100.0**					
HV87	130	0.000	0.1	0.30	15	30.0	NORMAL	0.093
	730	0.285	99.9	0.10	0	5.0	DRY	0.093
		0.285	**100.0**					
HV93	130	0.122	71.0	0.30	15	30.0	NORMAL	0.099
	730	0.050	29.0	0.10	0	5.0	DRY	0.099
		0.172	**100.0**					
HVAF	730	0.001	0.5	0.10	0	5.0	DRY	0.097
	900	0.005	2.5	0.30	0	5.0	DRY	0.051
	950	0.209	97.1	0.30	0	5.0	DRY	0.051
		0.215	**100.1**					
HVLP	130	0.087	44.2	0.30	15	30.0	NORMAL	0.097
	240	0.085	43.2	0.10	85	5.0	NORMAL	0.027
	730	0.025	12.6	0.10	0	5.0	DRY	0.097
		0.198	**100.0**					
HVNR	140	0.000	0.1	0.25	30	15.0	NORMAL	0.097
	730	0.202	99.8	0.10	0	5.0	DRY	0.097
	950	0.000		0.30	0	5.0	DRY	0.051
		0.202	**99.9**					
HVRS	140	0.014	2.2	0.25	30	15.0	NORMAL	0.085
	730	0.616	97.8	0.10	0	5.0	DRY	0.085
	950	0.000		0.30	0	5.0	DRY	0.044
		0.630	**100.0**					
JM63	130	0.017	2.0	0.30	15	30.0	NORMAL	0.082
	140	0.422	50.3	0.25	30	15.0	NORMAL	0.082
	555	0.129	15.3	0.10	5	0.0	DRY	0.023
	720	0.053	6.3	0.10	5	90.0	NORMAL	0.023
	730	0.219	26.0	0.10	0	5.0	DRY	0.082
		0.840	**99.9**					
JM67	140	0.227	59.6	0.25	30	15.0	NORMAL	0.090
	150	0.014	3.7	0.25	30	15.0	NORMAL	0.090
	730	0.140	36.8	0.10	0	5.0	DRY	0.090
		0.381	**100.1**					
JM75	130	0.004	0.4	0.30	15	30.0	NORMAL	0.079
	140	0.054	4.9	0.25	30	15.0	NORMAL	0.079
	730	1.053	94.7	0.10	0	5.0	DRY	0.079
		1.112	**100.0**					
JM76	730	0.044	25.9	0.10	0	5.0	DRY	0.099
	950	0.125	74.1	0.30	0	5.0	DRY	0.052

Sub Basin	Land Use Code	Area (sq mi)	Areainitial Loss (IA) (%)		Percent Impervious (RTIMP)	Vegetable Cover (%)	DTHETA	Kb
Major Basin ID: GP								
		0.169	**100.0**					
JM80	140	0.000	0.1	0.25	30	15.0	NORMAL	0.099
	730	0.048	29.1	0.10	0	5.0	DRY	0.099
	950	0.116	70.7	0.30	0	5.0	DRY	0.052
		0.164	**99.9**					
JM99	140	0.385	67.7	0.25	30	15.0	NORMAL	0.086
	730	0.089	15.7	0.10	0	5.0	DRY	0.086
	950	0.094	16.6	0.30	0	5.0	DRY	0.045
		0.568	**100.0**					
JMAF	730	0.080	54.7	0.10	0	5.0	DRY	0.101
	950	0.066	45.3	0.30	0	5.0	DRY	0.053
		0.147	**100.0**					
JMLP	130	0.071	10.0	0.30	15	30.0	NORMAL	0.084
	140	0.493	69.8	0.25	30	15.0	NORMAL	0.084
	710	0.000		0.10	5	80.0	NORMAL	0.023
	730	0.142	20.1	0.10	0	5.0	DRY	0.084
		0.705	**99.9**					
JMNR	140	0.004	2.9	0.25	30	15.0	NORMAL	0.101
	730	0.106	71.6	0.10	0	5.0	DRY	0.101
	950	0.038	25.5	0.30	0	5.0	DRY	0.053
		0.149	**100.0**					
JMRS	140	0.289	50.9	0.25	30	15.0	NORMAL	0.086
	730	0.202	35.6	0.10	0	5.0	DRY	0.086
	950	0.077	13.5	0.30	0	5.0	DRY	0.045
		0.567	**100.0**					
LO51	130	0.022	1.9	0.30	15	30.0	NORMAL	0.079
	140	0.403	35.7	0.25	30	15.0	NORMAL	0.079
	150	0.000		0.25	30	15.0	NORMAL	0.079
	400	0.022	1.9	0.10	80	5.0	NORMAL	0.079
	610	0.082	7.3	0.10	80	5.0	NORMAL	0.022
	730	0.414	36.7	0.10	0	5.0	DRY	0.079
	740	0.186	16.5	0.00	0	0.0	WET	0.022
		1.130	**100.0**					
LO67	130	0.021	1.7	0.30	15	30.0	NORMAL	0.078
	140	0.144	11.8	0.25	30	15.0	NORMAL	0.078
	150	0.598	49.1	0.25	30	15.0	NORMAL	0.078
	170	0.029	2.3	0.25	45	10.0	NORMAL	0.078
	190	0.011	0.9	0.25	45	5.0	NORMAL	0.078
	200	0.089	7.3	0.10	80	5.0	NORMAL	0.022
	520	0.023	1.9	0.29	40	40.0	NORMAL	0.022
	610	0.090	7.4	0.10	80	5.0	NORMAL	0.022
	710	0.008	0.6	0.10	5	80.0	NORMAL	0.022
	720	0.205	16.8	0.10	5	90.0	NORMAL	0.022
	740	0.000		0.00	0	0.0	WET	0.022
		1.217	**99.8**					
LO75	130	0.000		0.30	15	30.0	NORMAL	0.080
	140	0.617	63.7	0.25	30	15.0	NORMAL	0.080
	150	0.196	20.2	0.25	30	15.0	NORMAL	0.080
	190	0.047	4.8	0.25	45	5.0	NORMAL	0.080
	200	0.000		0.10	80	5.0	NORMAL	0.023
	520	0.023	2.4	0.29	40	40.0	NORMAL	0.023

Sub Basin	Land Use Code	Area (sq mi)	Areainitial Loss (IA) (%)		Percent Impervious (RTIMP)	Vegetable Cover (%)	DTHETA	Kb
Major Basin ID: GP								
LO75	550	0.005	0.5	0.10	80	10.0	NORMAL	0.023
	610	0.066	6.8	0.10	80	5.0	NORMAL	0.023
	710	0.016	1.6	0.10	5	80.0	NORMAL	0.023
	730	0.000		0.10	0	5.0	DRY	0.080
		0.970	**100.0**					
MEAF	140	0.488	35.7	0.25	30	15.0	NORMAL	0.076
	150	0.102	7.5	0.25	30	15.0	NORMAL	0.076
	200	0.009	0.6	0.10	80	5.0	NORMAL	0.022
	220	0.137	10.0	0.10	75	10.0	NORMAL	0.022
	230	0.007	0.5	0.10	85	5.0	NORMAL	0.022
	400	0.000		0.10	80	5.0	NORMAL	0.076
	520	0.000		0.29	40	40.0	NORMAL	0.022
	555	0.000		0.10	5	0.0	DRY	0.022
	710	0.073	5.3	0.10	5	80.0	NORMAL	0.022
	720	0.105	7.7	0.10	5	90.0	NORMAL	0.022
	730	0.384	28.0	0.10	0	5.0	DRY	0.076
	900	0.018	1.3	0.30	0	5.0	DRY	0.040
	950	0.046	3.4	0.30	0	5.0	DRY	0.040
		1.369	**100.0**					
NO07	140	0.148	43.4	0.25	30	15.0	NORMAL	0.092
	150	0.001	0.1	0.25	30	15.0	NORMAL	0.092
	180	0.000		0.25	45	5.0	NORMAL	0.092
	190	0.059	17.5	0.25	45	5.0	NORMAL	0.092
	200	0.006	1.8	0.10	80	5.0	NORMAL	0.025
	520	0.005	1.5	0.29	40	40.0	NORMAL	0.025
	550	0.011	3.1	0.10	80	10.0	NORMAL	0.025
	720	0.080	23.6	0.10	5	90.0	NORMAL	0.025
	900	0.031	9.1	0.30	0	5.0	DRY	0.048
		0.340	**100.1**					
NO11	140	0.012	1.4	0.25	30	15.0	NORMAL	0.081
	150	0.268	31.1	0.25	30	15.0	NORMAL	0.081
	230	0.000		0.10	85	5.0	NORMAL	0.023
	320	0.377	43.8	0.15	80	0.0	NORMAL	0.023
	520	0.046	5.4	0.29	40	40.0	NORMAL	0.023
	550	0.013	1.5	0.10	80	10.0	NORMAL	0.023
	720	0.025	2.9	0.10	5	90.0	NORMAL	0.023
	730	0.101	11.8	0.10	0	5.0	DRY	0.081
	900	0.019	2.2	0.30	0	5.0	DRY	0.042
		0.860	**100.1**					
NO99	140	0.087	10.2	0.25	30	15.0	NORMAL	0.082
	150	0.356	41.5	0.25	30	15.0	NORMAL	0.082
	180	0.000		0.25	45	5.0	NORMAL	0.082
	200	0.035	4.0	0.10	80	5.0	NORMAL	0.023
	220	0.000		0.10	75	10.0	NORMAL	0.023
	720	0.070	8.1	0.10	5	90.0	NORMAL	0.023
	730	0.097	11.3	0.10	0	5.0	DRY	0.082
	900	0.213	24.8	0.30	0	5.0	DRY	0.042
		0.858	**99.9**					
NOAF	320	0.083	29.1	0.15	80	0.0	NORMAL	0.026
	730	0.202	70.9	0.10	0	5.0	DRY	0.093
		0.285	**100.0**					
NONR	130	0.158	19.0	0.30	15	30.0	NORMAL	0.082
	140	0.265	32.0	0.25	30	15.0	NORMAL	0.082
	150	0.000		0.25	30	15.0	NORMAL	0.082

Sub Basin	Land Use Code	Area (sq mi)	Areainitial Loss (IA) (%)		Percent Impervious (RTIMP)	Vegetable Cover (%)	DTHETA	Kb
Major Basin ID: GP								
NONR	190	0.000		0.25	45	5.0	NORMAL	0.082
	200	0.125	15.1	0.10	80	5.0	NORMAL	0.023
	240	0.010	1.2	0.10	85	5.0	NORMAL	0.023
	550	0.000		0.10	80	10.0	NORMAL	0.023
	730	0.004	0.4	0.10	0	5.0	DRY	0.082
	750	0.180	21.6	0.50	0	85.0	NORMAL	0.043
	810	0.089	10.7	0.10	80	5.0	NORMAL	0.082
	900	0.000		0.30	0	5.0	DRY	0.043
		0.830	**100.0**					
OL03	130	0.000		0.30	15	30.0	NORMAL	0.079
	140	0.552	50.2	0.25	30	15.0	NORMAL	0.079
	150	0.000		0.25	30	15.0	NORMAL	0.079
	180	0.141	12.8	0.25	45	5.0	NORMAL	0.079
	190	0.175	15.9	0.25	45	5.0	NORMAL	0.079
	220	0.004	0.3	0.10	75	10.0	NORMAL	0.022
	230	0.021	1.9	0.10	85	5.0	NORMAL	0.022
	520	0.005	0.4	0.29	40	40.0	NORMAL	0.022
	530	0.012	1.1	0.10	80	5.0	NORMAL	0.079
	550	0.012	1.1	0.10	80	10.0	NORMAL	0.022
	710	0.018	1.7	0.10	5	80.0	NORMAL	0.022
	720	0.161	14.7	0.10	5	90.0	NORMAL	0.022
		1.099	**100.1**					
OL11	130	0.141	41.5	0.30	15	30.0	NORMAL	0.092
	140	0.026	7.6	0.25	30	15.0	NORMAL	0.092
	150	0.000		0.25	30	15.0	NORMAL	0.092
	180	0.066	19.6	0.25	45	5.0	NORMAL	0.092
	190	0.023	6.7	0.25	45	5.0	NORMAL	0.092
	220	0.000	0.1	0.10	75	10.0	NORMAL	0.025
	530	0.001	0.4	0.10	80	5.0	NORMAL	0.092
	550	0.000		0.10	80	10.0	NORMAL	0.025
	720	0.030	8.8	0.10	5	90.0	NORMAL	0.025
	730	0.052	15.3	0.10	0	5.0	DRY	0.092
		0.339	**100.0**					
OL99	140	0.150	34.4	0.25	30	15.0	NORMAL	0.089
	180	0.048	11.1	0.25	45	5.0	NORMAL	0.089
	190	0.070	16.0	0.25	45	5.0	NORMAL	0.089
	240	0.025	5.6	0.10	85	5.0	NORMAL	0.025
	530	0.004	0.8	0.10	80	5.0	NORMAL	0.089
	720	0.018	4.2	0.10	5	90.0	NORMAL	0.025
	730	0.092	21.1	0.10	0	5.0	DRY	0.089
	810	0.000		0.10	80	5.0	NORMAL	0.089
	900	0.030	6.8	0.30	0	5.0	DRY	0.046
		0.437	**100.0**					
OLAF	130	0.056	5.4	0.30	15	30.0	NORMAL	0.080
	140	0.003	0.3	0.25	30	15.0	NORMAL	0.080
	150	0.456	44.4	0.25	30	15.0	NORMAL	0.080
	180	0.015	1.4	0.25	45	5.0	NORMAL	0.080
	200	0.004	0.4	0.10	80	5.0	NORMAL	0.022
	220	0.003	0.3	0.10	75	10.0	NORMAL	0.022
	230	0.014	1.4	0.10	85	5.0	NORMAL	0.022
	320	0.000		0.15	80	0.0	NORMAL	0.022
	520	0.000		0.29	40	40.0	NORMAL	0.022
	530	0.033	3.3	0.10	80	5.0	NORMAL	0.080
	555	0.015	1.4	0.10	5	0.0	DRY	0.022
	730	0.428	41.7	0.10	0	5.0	DRY	0.080

Major Basin ID: GP

Sub Basin	Land Use Code	Area (sq mi)	Areainitial Loss (IA) (%)		Percent Impervious (RTIMP)	Vegetable Cover (%)	DTHETA	Kb
		1.026	**100.0**					
OLNR	150	0.404	58.1	0.25	30	15.0	NORMAL	0.084
	180	0.108	15.5	0.25	45	5.0	NORMAL	0.084
	190	0.021	3.0	0.25	45	5.0	NORMAL	0.084
	240	0.009	1.2	0.10	85	5.0	NORMAL	0.023
	550	0.002	0.3	0.10	80	10.0	NORMAL	0.023
	730	0.006	0.9	0.10	0	5.0	DRY	0.084
	750	0.000		0.50	0	85.0	NORMAL	0.044
	810	0.062	8.9	0.10	80	5.0	NORMAL	0.084
	900	0.084	12.1	0.30	0	5.0	DRY	0.044
		0.696	**100.0**					
PE03	140	0.199	48.5	0.25	30	15.0	NORMAL	0.090
	190	0.064	15.7	0.25	45	5.0	NORMAL	0.090
	230	0.012	2.9	0.10	85	5.0	NORMAL	0.025
	530	0.015	3.7	0.10	80	5.0	NORMAL	0.090
	610	0.001	0.3	0.10	80	5.0	NORMAL	0.025
	720	0.118	28.9	0.10	5	90.0	NORMAL	0.025
		0.409	**100.0**					
PE07	140	0.275	47.8	0.25	30	15.0	NORMAL	0.086
	190	0.052	9.1	0.25	45	5.0	NORMAL	0.086
	220	0.008	1.4	0.10	75	10.0	NORMAL	0.024
	230	0.006	1.1	0.10	85	5.0	NORMAL	0.024
	610	0.004	0.7	0.10	80	5.0	NORMAL	0.024
	720	0.225	39.1	0.10	5	90.0	NORMAL	0.024
	740	0.005	0.8	0.00	0	0.0	WET	0.024
		0.574	**100.0**					
PE11	140	0.537	58.2	0.25	30	15.0	NORMAL	0.081
	150	0.005	0.6	0.25	30	15.0	NORMAL	0.081
	190	0.087	9.5	0.25	45	5.0	NORMAL	0.081
	200	0.022	2.3	0.10	80	5.0	NORMAL	0.023
	220	0.011	1.2	0.10	75	10.0	NORMAL	0.023
	230	0.000		0.10	85	5.0	NORMAL	0.023
	530	0.040	4.4	0.10	80	5.0	NORMAL	0.081
	610	0.011	1.2	0.10	80	5.0	NORMAL	0.023
	720	0.210	22.7	0.10	5	90.0	NORMAL	0.023
		0.924	**100.1**					
PE35	140	0.499	51.1	0.25	30	15.0	NORMAL	0.080
	180	0.039	4.0	0.25	45	5.0	NORMAL	0.080
	190	0.228	23.3	0.25	45	5.0	NORMAL	0.080
	200	0.083	8.5	0.10	80	5.0	NORMAL	0.023
	250	0.001	0.1	0.10	85	0.0	NORMAL	0.023
	520	0.065	6.7	0.29	40	40.0	NORMAL	0.023
	610	0.033	3.3	0.10	80	5.0	NORMAL	0.023
	740	0.030	3.0	0.00	0	0.0	WET	0.023
		0.977	**100.0**					
PE43	140	0.772	77.4	0.25	30	15.0	NORMAL	0.080
	180	0.011	1.1	0.25	45	5.0	NORMAL	0.080
	190	0.031	3.1	0.25	45	5.0	NORMAL	0.080
	200	0.046	4.6	0.10	80	5.0	NORMAL	0.022
	520	0.083	8.3	0.29	40	40.0	NORMAL	0.022
	550	0.000		0.10	80	10.0	NORMAL	0.022
	710	0.053	5.3	0.10	5	80.0	NORMAL	0.022
		0.997	**99.8**					

* Non default value

Major Basin ID: GP

Sub Basin	Land Use Code	Area (sq mi)	Areainitial Loss (IA) (%)		Percent Impervious (RTIMP)	Vegetable Cover (%)	DTHETA	Kb
PE97	140	0.191	34.1	0.25	30	15.0	NORMAL	0.086
	150	0.098	17.5	0.25	30	15.0	NORMAL	0.086
	170	0.022	4.0	0.25	45	10.0	NORMAL	0.086
	220	0.031	5.4	0.10	75	10.0	NORMAL	0.024
	240	0.038	6.8	0.10	85	5.0	NORMAL	0.024
	610	0.011	2.0	0.10	80	5.0	NORMAL	0.024
	720	0.079	14.1	0.10	5	90.0	NORMAL	0.024
	730	0.080	14.3	0.10	0	5.0	DRY	0.086
	740	0.005	1.0	0.00	0	0.0	WET	0.024
	810	0.000		0.10	80	5.0	NORMAL	0.086
	900	0.005	0.8	0.30	0	5.0	DRY	0.045
		0.560	**100.0**					
PE99	140	0.215	72.9	0.25	30	15.0	NORMAL	0.093
	150	0.000		0.25	30	15.0	NORMAL	0.093
	190	0.010	3.2	0.25	45	5.0	NORMAL	0.093
	220	0.000	0.1	0.10	75	10.0	NORMAL	0.026
	230	0.022	7.5	0.10	85	5.0	NORMAL	0.026
	240	0.001	0.2	0.10	85	5.0	NORMAL	0.026
	530	0.001	0.3	0.10	80	5.0	NORMAL	0.093
	610	0.009	3.0	0.10	80	5.0	NORMAL	0.026
	720	0.038	12.8	0.10	5	90.0	NORMAL	0.026
		0.294	**100.0**					
PEAF	140	0.007	1.3	0.25	30	15.0	NORMAL	0.087
	150	0.284	53.4	0.25	30	15.0	NORMAL	0.087
	170	0.021	3.9	0.25	45	10.0	NORMAL	0.087
	180	0.014	2.7	0.25	45	5.0	NORMAL	0.087
	220	0.006	1.1	0.10	75	10.0	NORMAL	0.024
	230	0.164	30.8	0.10	85	5.0	NORMAL	0.024
	530	0.005	0.8	0.10	80	5.0	NORMAL	0.087
	610	0.005	1.0	0.10	80	5.0	NORMAL	0.024
	730	0.026	4.9	0.10	0	5.0	DRY	0.087
		0.531	**99.9**					
PENR	140	0.000	0.1	0.25	30	15.0	NORMAL	0.097
	150	0.002	0.8	0.25	30	15.0	NORMAL	0.097
	240	0.001	0.6	0.10	85	5.0	NORMAL	0.027
	320	0.000	0.1	0.15	80	0.0	NORMAL	0.027
	730	0.051	25.9	0.10	0	5.0	DRY	0.097
	810	0.143	72.4	0.10	80	5.0	NORMAL	0.097
	900	0.000	0.1	0.30	0	5.0	DRY	0.051
		0.197	**100.0**					
PP03	130	0.325	100.0	0.30	15	30.0	NORMAL	0.092
	730	0.000		0.10	0	5.0	DRY	0.092
		0.325	**100.0**					
PP07	130	0.103	52.6	0.30	15	30.0	NORMAL	0.098
	320	0.001	0.5	0.15	80	0.0	NORMAL	0.027
	730	0.092	46.9	0.10	0	5.0	DRY	0.098
		0.195	**100.0**					
PP67	120	0.091	94.0	0.30	5	50.0	NORMAL	0.105
	130	0.004	4.3	0.30	15	30.0	NORMAL	0.105
	730	0.002	1.8	0.10	0	5.0	DRY	0.105
		0.096	**100.1**					
PP73	120	0.000		0.30	5	50.0	NORMAL	0.086
	130	0.423	77.7	0.30	15	30.0	NORMAL	0.086

* Non default value

Sub Basin	Land Use Code	Area (sq mi)	AreaInitial Loss (IA) (%)		Percent Impervious (RTIMP)	Vegetable Cover (%)	DTHETA	Kb
Major Basin ID: GP								
PP73	140	0.121	22.2	0.25	30	15.0	NORMAL	0.086
	520	0.001	0.1	0.29	40	40.0	NORMAL	0.024
		0.545	**100.0**					
PP75	130	0.101	24.0	0.30	15	30.0	NORMAL	0.089
	140	0.006	1.5	0.25	30	15.0	NORMAL	0.089
	200	0.000		0.10	80	5.0	NORMAL	0.025
	230	0.002	0.4	0.10	85	5.0	NORMAL	0.025
	520	0.127	30.3	0.29	40	40.0	NORMAL	0.025
	730	0.038	9.1	0.10	0	5.0	DRY	0.089
	900	0.077	18.2	0.30	0	5.0	DRY	0.047
	950	0.069	16.5	0.30	0	5.0	DRY	0.047
		0.419	**100.0**					
PP77	130	0.132	49.0	0.30	15	30.0	NORMAL	0.094
	730	0.042	15.7	0.10	0	5.0	DRY	0.094
	900	0.072	26.6	0.30	0	5.0	DRY	0.049
	950	0.023	8.6	0.30	0	5.0	DRY	0.049
		0.270	**99.9**					
PP81	130	0.197	100.0	0.30	15	30.0	NORMAL	0.097
		0.197	**100.0**					
PP87	130	0.666	67.8	0.30	15	30.0	NORMAL	0.080
	730	0.221	22.5	0.10	0	5.0	DRY	0.080
	950	0.094	9.6	0.30	0	5.0	DRY	0.042
		0.982	**99.9**					
PP91	130	0.161	99.9	0.30	15	30.0	NORMAL	0.100
	730	0.000	0.1	0.10	0	5.0	DRY	0.100
		0.161	**100.0**					
PPAF	320	0.269	99.8	0.15	80	0.0	NORMAL	0.026
	730	0.001	0.2	0.10	0	5.0	DRY	0.094
		0.270	**100.0**					
PPLP	130	0.564	63.7	0.30	15	30.0	NORMAL	0.081
	140	0.000		0.25	30	15.0	NORMAL	0.081
	240	0.032	3.6	0.10	85	5.0	NORMAL	0.023
	730	0.290	32.7	0.10	0	5.0	DRY	0.081
		0.885	**100.0**					
PPNR	130	0.015	6.5	0.30	15	30.0	NORMAL	0.095
	730	0.205	86.4	0.10	0	5.0	DRY	0.095
	900	0.000	0.1	0.30	0	5.0	DRY	0.050
	950	0.017	7.0	0.30	0	5.0	DRY	0.050
		0.237	**100.0**					
RG07	140	0.084	24.1	0.25	30	15.0	NORMAL	0.091
	180	0.000	0.1	0.25	45	5.0	NORMAL	0.091
	240	0.000		0.10	85	5.0	NORMAL	0.025
	710	0.010	2.9	0.10	5	80.0	NORMAL	0.025
	950	0.255	72.9	0.30	0	5.0	DRY	0.048
		0.350	**100.0**					
RG93	140	0.248	100.0	0.25	30	15.0	NORMAL	0.095
		0.248	**100.0**					
RGAF	140	0.128	38.4	0.25	30	15.0	NORMAL	0.092
	320	0.000		0.15	80	0.0	NORMAL	0.025

Sub Basin	Land Use Code	Area (sq mi)	AreaInitial Loss (IA) (%)		Percent Impervious (RTIMP)	Vegetable Cover (%)	DTHETA	Kb
Major Basin ID: GP								
RGAF	730	0.204	61.4	0.10	0	5.0	DRY	0.092
	900	0.001	0.2	0.30	0	5.0	DRY	0.048
		0.332	**100.0**					
RGLP	140	0.009	2.2	0.25	30	15.0	NORMAL	0.090
	240	0.086	21.0	0.10	85	5.0	NORMAL	0.025
	520	0.000		0.29	40	40.0	NORMAL	0.025
	730	0.000		0.10	0	5.0	DRY	0.090
	950	0.315	76.8	0.30	0	5.0	DRY	0.047
		0.410	**100.0**					
RO99	140	0.103	24.9	0.25	30	15.0	NORMAL	0.089
	190	0.219	53.0	0.25	45	5.0	NORMAL	0.089
	220	0.025	6.0	0.10	75	10.0	NORMAL	0.025
	230	0.001	0.1	0.10	85	5.0	NORMAL	0.025
	400	0.009	2.1	0.10	80	5.0	NORMAL	0.089
	530	0.000		0.10	80	5.0	NORMAL	0.089
	740	0.057	13.7	0.00	0	0.0	WET	0.025
		0.414	**99.8**					
SK67	120	0.030	3.2	0.30	5	50.0	NORMAL	0.080
	130	0.327	34.7	0.30	15	30.0	NORMAL	0.080
	140	0.275	29.2	0.25	30	15.0	NORMAL	0.080
	150	0.078	8.3	0.25	30	15.0	NORMAL	0.080
	190	0.000		0.25	45	5.0	NORMAL	0.080
	200	0.000		0.10	80	5.0	NORMAL	0.023
	400	0.052	5.5	0.10	80	5.0	NORMAL	0.080
	520	0.060	6.4	0.29	40	40.0	NORMAL	0.023
	530	0.031	3.3	0.10	80	5.0	NORMAL	0.080
	550	0.011	1.1	0.10	80	10.0	NORMAL	0.023
	555	0.004	0.4	0.10	5	0.0	DRY	0.023
	730	0.040	4.3	0.10	0	5.0	DRY	0.080
	750	0.027	2.8	0.50	0	85.0	NORMAL	0.042
	900	0.008	0.9	0.30	0	5.0	DRY	0.042
		0.942	**100.1**					
TB35	140	0.732	74.9	0.25	30	15.0	NORMAL	0.080
	150	0.013	1.4	0.25	30	15.0	NORMAL	0.080
	190	0.085	8.7	0.25	45	5.0	NORMAL	0.080
	200	0.057	5.8	0.10	80	5.0	NORMAL	0.023
	320	0.000		0.15	80	0.0	NORMAL	0.023
	520	0.034	3.5	0.29	40	40.0	NORMAL	0.023
	610	0.032	3.3	0.10	80	5.0	NORMAL	0.023
	710	0.023	2.3	0.10	5	80.0	NORMAL	0.023
		0.976	**99.9**					
TB43	120	0.249	25.0	0.30	5	50.0	NORMAL	0.080
	140	0.683	68.6	0.25	30	15.0	NORMAL	0.080
	180	0.028	2.8	0.25	45	5.0	NORMAL	0.080
	200	0.019	1.9	0.10	80	5.0	NORMAL	0.022
	710	0.016	1.6	0.10	5	80.0	NORMAL	0.022
		0.995	**99.9**					
TB51	120	0.494	49.9	0.30	5	50.0	NORMAL	0.080
	140	0.317	32.1	0.25	30	15.0	NORMAL	0.080
	180	0.110	11.1	0.25	45	5.0	NORMAL	0.080
	200	0.023	2.3	0.10	80	5.0	NORMAL	0.022
	320	0.015	1.5	0.15	80	0.0	NORMAL	0.022
	520	0.023	2.4	0.29	40	40.0	NORMAL	0.022
	550	0.001	0.1	0.10	80	10.0	NORMAL	0.022

Sub Basin	Land Use Code	Area (sq mi)	Areainitial Loss (IA) (%)		Percent Impervious (RTIMP)	Vegetable Cover (%)	DTHETA	Kb
Major Basin ID: GP								
TB51	900	0.007	0.7	0.30	0	5.0	DRY	0.041
		0.990	**100.1**					
TB59	120	0.004	0.4	0.30	5	50.0	NORMAL	0.080
	130	0.001	0.1	0.30	15	30.0	NORMAL	0.080
	140	0.015	1.5	0.25	30	15.0	NORMAL	0.080
	150	0.482	48.4	0.25	30	15.0	NORMAL	0.080
	180	0.049	4.9	0.25	45	5.0	NORMAL	0.080
	190	0.048	4.9	0.25	45	5.0	NORMAL	0.080
	200	0.064	6.4	0.10	80	5.0	NORMAL	0.022
	400	0.029	2.9	0.10	80	5.0	NORMAL	0.080
	520	0.170	17.1	0.29	40	40.0	NORMAL	0.022
	550	0.003	0.3	0.10	80	10.0	NORMAL	0.022
	555	0.002	0.2	0.10	5	0.0	DRY	0.022
	710	0.017	1.7	0.10	5	80.0	NORMAL	0.022
	900	0.111	11.2	0.30	0	5.0	DRY	0.041
		0.995	**100.0**					
TB99	140	0.829	85.0	0.25	30	15.0	NORMAL	0.080
	190	0.002	0.2	0.25	45	5.0	NORMAL	0.080
	220	0.031	3.2	0.10	75	10.0	NORMAL	0.023
	400	0.025	2.5	0.10	80	5.0	NORMAL	0.080
	720	0.086	8.8	0.10	5	90.0	NORMAL	0.023
	740	0.003	0.3	0.00	0	0.0	WET	0.023
		0.976	**100.0**					
TBNR	140	0.570	50.8	0.25	30	15.0	NORMAL	0.079
	150	0.140	12.5	0.25	30	15.0	NORMAL	0.079
	180	0.002	0.2	0.25	45	5.0	NORMAL	0.079
	220	0.000		0.10	75	10.0	NORMAL	0.022
	240	0.078	7.0	0.10	85	5.0	NORMAL	0.022
	520	0.000		0.29	40	40.0	NORMAL	0.022
	555	0.000		0.10	5	0.0	DRY	0.022
	710	0.080	7.1	0.10	5	80.0	NORMAL	0.022
	720	0.055	4.9	0.10	5	90.0	NORMAL	0.022
	730	0.054	4.8	0.10	0	5.0	DRY	0.079
	740	0.075	6.7	0.00	0	0.0	WET	0.022
	810	0.068	6.0	0.10	80	5.0	NORMAL	0.079
		1.123	**100.0**					
TL07	140	0.355	61.3	0.25	30	15.0	NORMAL	0.086
	190	0.043	7.3	0.25	45	5.0	NORMAL	0.086
	520	0.030	5.2	0.29	40	40.0	NORMAL	0.024
	530	0.017	2.9	0.10	80	5.0	NORMAL	0.086
	555	0.010	1.7	0.10	5	0.0	DRY	0.024
	710	0.001	0.2	0.10	5	80.0	NORMAL	0.024
	720	0.124	21.4	0.10	5	90.0	NORMAL	0.024
		0.580	**100.0**					
UH07	140	0.159	63.2	0.25	30	15.0	NORMAL	0.095
	180	0.003	1.0	0.25	45	5.0	NORMAL	0.095
	200	0.002	0.7	0.10	80	5.0	NORMAL	0.026
	720	0.087	34.5	0.10	5	90.0	NORMAL	0.026
	900	0.001	0.6	0.30	0	5.0	DRY	0.050
		0.252	**100.0**					
UH15	140	0.214	21.0	0.25	30	15.0	NORMAL	0.080
	150	0.009	0.9	0.25	30	15.0	NORMAL	0.080
	180	0.208	20.4	0.25	45	5.0	NORMAL	0.080
	200	0.028	2.7	0.10	80	5.0	NORMAL	0.022

* Non default value

Sub Basin	Land Use Code	Area (sq mi)	Areainitial Loss (IA) (%)		Percent Impervious (RTIMP)	Vegetable Cover (%)	DTHETA	Kb
Major Basin ID: GP								
UH15	555	0.019	1.9	0.10	5	0.0	DRY	0.022
	740	0.016	1.6	0.00	0	0.0	WET	0.022
	750	0.079	7.7	0.50	0	85.0	NORMAL	0.041
	900	0.446	43.7	0.30	0	5.0	DRY	0.041
		1.019	**99.9**					
UH35	120	0.000		0.30	5	50.0	NORMAL	0.078
	150	0.416	36.6	0.25	30	15.0	NORMAL	0.078
	180	0.191	16.8	0.25	45	5.0	NORMAL	0.078
	190	0.116	10.2	0.25	45	5.0	NORMAL	0.078
	200	0.203	17.8	0.10	80	5.0	NORMAL	0.022
	320	0.102	9.0	0.15	80	0.0	NORMAL	0.022
	520	0.000		0.29	40	40.0	NORMAL	0.022
	555	0.014	1.2	0.10	5	0.0	DRY	0.022
	610	0.094	8.3	0.10	80	5.0	NORMAL	0.022
		1.136	**99.9**					
UH43	120	0.596	58.1	0.30	5	50.0	NORMAL	0.080
	150	0.181	17.6	0.25	30	15.0	NORMAL	0.080
	170	0.001		0.25	45	10.0	NORMAL	0.080
	180	0.050	4.9	0.25	45	5.0	NORMAL	0.080
	200	0.017	1.6	0.10	80	5.0	NORMAL	0.022
	520	0.023	2.3	0.29	40	40.0	NORMAL	0.022
	610	0.026	2.5	0.10	80	5.0	NORMAL	0.022
	730	0.127	12.4	0.10	0	5.0	DRY	0.080
	900	0.006	0.6	0.30	0	5.0	DRY	0.041
		1.025	**100.0**					
UH51	120	0.000		0.30	5	50.0	NORMAL	0.080
	150	0.435	44.0	0.25	30	15.0	NORMAL	0.080
	170	0.372	37.6	0.25	45	10.0	NORMAL	0.080
	180	0.021	2.1	0.25	45	5.0	NORMAL	0.080
	200	0.016	1.6	0.10	80	5.0	NORMAL	0.022
	220	0.006	0.6	0.10	75	10.0	NORMAL	0.022
	520	0.026	2.6	0.29	40	40.0	NORMAL	0.022
	610	0.030	3.0	0.10	80	5.0	NORMAL	0.022
	730	0.076	7.6	0.10	0	5.0	DRY	0.080
	900	0.009	0.9	0.30	0	5.0	DRY	0.041
		0.990	**100.0**					
UH67	150	0.374	47.7	0.25	30	15.0	NORMAL	0.082
	190	0.078	10.0	0.25	45	5.0	NORMAL	0.082
	200	0.092	11.7	0.10	80	5.0	NORMAL	0.023
	520	0.108	13.8	0.29	40	40.0	NORMAL	0.023
	550	0.008	1.0	0.10	80	10.0	NORMAL	0.023
	610	0.055	7.0	0.10	80	5.0	NORMAL	0.023
	710	0.011	1.4	0.10	5	80.0	NORMAL	0.023
	750	0.008	1.0	0.50	0	85.0	NORMAL	0.043
	900	0.051	6.5	0.30	0	5.0	DRY	0.043
		0.784	**100.1**					
UH75	150	0.552	67.8	0.25	30	15.0	NORMAL	0.082
	180	0.001	0.2	0.25	45	5.0	NORMAL	0.082
	190	0.016	2.0	0.25	45	5.0	NORMAL	0.082
	200	0.020	2.5	0.10	80	5.0	NORMAL	0.023
	400	0.000		0.10	80	5.0	NORMAL	0.082
	520	0.047	5.7	0.29	40	40.0	NORMAL	0.023
	530	0.000		0.10	80	5.0	NORMAL	0.082
	610	0.027	3.3	0.10	80	5.0	NORMAL	0.023
	710	0.006	0.7	0.10	5	80.0	NORMAL	0.023

* Non default value

Sub Basin	Land Use Code	Area (sq mi)	AreaInitial Loss (IA) (%)		Percent Impervious (RTIMP)	Vegetable Cover (%)	DTHETA	Kb
Major Basin ID: GP								
UH75	720	0.145	17.8	0.10	5	90.0	NORMAL	0.023
	750	0.000		0.50	0	85.0	NORMAL	0.043
		0.814	**100.0**					
UH87	140	0.725	72.7	0.25	30	15.0	NORMAL	0.080
	200	0.040	4.0	0.10	80	5.0	NORMAL	0.022
	720	0.233	23.3	0.10	5	90.0	NORMAL	0.022
	810	0.000		0.10	80	5.0	NORMAL	0.080
		0.998	**100.0**					
UH91	140	0.486	52.4	0.25	30	15.0	NORMAL	0.081
	180	0.202	21.8	0.25	45	5.0	NORMAL	0.081
	200	0.007	0.7	0.10	80	5.0	NORMAL	0.023
	720	0.234	25.2	0.10	5	90.0	NORMAL	0.023
		0.929	**100.1**					
UH97	140	0.115	42.3	0.25	30	15.0	NORMAL	0.094
	180	0.080	29.5	0.25	45	5.0	NORMAL	0.094
	190	0.005	1.8	0.25	45	5.0	NORMAL	0.094
	520	0.002	0.6	0.29	40	40.0	NORMAL	0.026
	720	0.070	25.8	0.10	5	90.0	NORMAL	0.026
		0.272	**100.0**					
UH99	140	0.425	75.5	0.25	30	15.0	NORMAL	0.086
	180	0.001	0.2	0.25	45	5.0	NORMAL	0.086
	190	0.119	21.2	0.25	45	5.0	NORMAL	0.086
	520	0.001	0.2	0.29	40	40.0	NORMAL	0.024
	530	0.016	2.8	0.10	80	5.0	NORMAL	0.086
	720	0.001	0.2	0.10	5	90.0	NORMAL	0.024
	900	0.000		0.30	0	5.0	DRY	0.045
		0.563	**100.1**					
UHAF	150	0.172	35.2	0.25	30	15.0	NORMAL	0.088
	720	0.099	20.3	0.10	5	90.0	NORMAL	0.024
	730	0.218	44.5	0.10	0	5.0	DRY	0.088
		0.489	**100.0**					
UHLO	150	0.543	66.0	0.25	30	15.0	NORMAL	0.082
	180	0.058	7.0	0.25	45	5.0	NORMAL	0.082
	190	0.000		0.25	45	5.0	NORMAL	0.082
	400	0.000		0.10	80	5.0	NORMAL	0.082
	520	0.000		0.29	40	40.0	NORMAL	0.023
	530	0.029	3.6	0.10	80	5.0	NORMAL	0.082
	610	0.046	5.6	0.10	80	5.0	NORMAL	0.023
	710	0.055	6.7	0.10	5	80.0	NORMAL	0.023
	720	0.091	11.0	0.10	5	90.0	NORMAL	0.023
		0.822	**99.9**					
UHNR	140	0.041	10.7	0.25	30	15.0	NORMAL	0.090
	190	0.068	17.6	0.25	45	5.0	NORMAL	0.090
	200	0.019	4.9	0.10	80	5.0	NORMAL	0.025
	550	0.031	8.1	0.10	80	10.0	NORMAL	0.025
	610	0.051	13.2	0.10	80	5.0	NORMAL	0.025
	730	0.139	35.9	0.10	0	5.0	DRY	0.090
	810	0.037	9.6	0.10	80	5.0	NORMAL	0.090
		0.386	**100.0**					
UHSK	130	0.172	18.4	0.30	15	30.0	NORMAL	0.081
	140	0.000		0.25	30	15.0	NORMAL	0.081
	150	0.312	33.4	0.25	30	15.0	NORMAL	0.081

Sub Basin	Land Use Code	Area (sq mi)	AreaInitial Loss (IA) (%)		Percent Impervious (RTIMP)	Vegetable Cover (%)	DTHETA	Kb
Major Basin ID: GP								
UHSK	170	0.002	0.2	0.25	45	10.0	NORMAL	0.081
	190	0.008	0.9	0.25	45	5.0	NORMAL	0.081
	200	0.012	1.3	0.10	80	5.0	NORMAL	0.023
	220	0.001	0.1	0.10	75	10.0	NORMAL	0.023
	400	0.012	1.2	0.10	80	5.0	NORMAL	0.081
	520	0.029	3.1	0.29	40	40.0	NORMAL	0.023
	550	0.009	1.0	0.10	80	10.0	NORMAL	0.023
	555	0.003	0.3	0.10	5	0.0	DRY	0.023
	610	0.020	2.2	0.10	80	5.0	NORMAL	0.023
	710	0.009	1.0	0.10	5	80.0	NORMAL	0.023
	730	0.148	15.9	0.10	0	5.0	DRY	0.081
	810	0.076	8.1	0.10	80	5.0	NORMAL	0.081
	900	0.122	13.1	0.30	0	5.0	DRY	0.042
		0.934	**100.2**					
WL59	120	0.180	32.0	0.30	5	50.0	NORMAL	0.086
	130	0.002	0.3	0.30	15	30.0	NORMAL	0.086
	140	0.002	0.4	0.25	30	15.0	NORMAL	0.086
	730	0.379	67.3	0.10	0	5.0	DRY	0.086
		0.562	**100.0**					
WL67	120	0.071	68.9	0.30	5	50.0	NORMAL	0.105
	730	0.032	31.1	0.10	0	5.0	DRY	0.105
		0.103	**100.0**					
WL75	120	0.000		0.30	5	50.0	NORMAL	0.088
	130	0.235	49.5	0.30	15	30.0	NORMAL	0.088
	140	0.030	6.4	0.25	30	15.0	NORMAL	0.088
	150	0.087	18.4	0.25	30	15.0	NORMAL	0.088
	320	0.000		0.15	80	0.0	NORMAL	0.024
	520	0.122	25.7	0.29	40	40.0	NORMAL	0.024
	730	0.000		0.10	0	5.0	DRY	0.088
		0.475	**100.0**					
WL83	130	0.124	99.7	0.30	15	30.0	NORMAL	0.102
	140	0.000	0.3	0.25	30	15.0	NORMAL	0.102
		0.125	**100.0**					
WLNR	130	0.137	35.1	0.30	15	30.0	NORMAL	0.090
	140	0.000	0.1	0.25	30	15.0	NORMAL	0.090
	150	0.000		0.25	30	15.0	NORMAL	0.090
	320	0.006	1.6	0.15	80	0.0	NORMAL	0.025
	730	0.032	8.3	0.10	0	5.0	DRY	0.090
	900	0.125	32.0	0.30	0	5.0	DRY	0.047
	950	0.089	22.9	0.30	0	5.0	DRY	0.047
		0.390	**100.0**					
WWBR	140	0.143	78.0	0.25	30	15.0	NORMAL	0.098
	730	0.041	22.0	0.10	0	5.0	DRY	0.098
		0.184	**100.0**					
WWLP	140	0.052	38.1	0.25	30	15.0	NORMAL	0.102
	730	0.084	61.9	0.10	0	5.0	DRY	0.102
		0.136	**100.0**					
WWRS	140	0.064	44.5	0.25	30	15.0	NORMAL	0.101
	520	0.025	17.3	0.29	40	40.0	NORMAL	0.028
	710	0.038	26.5	0.10	5	80.0	NORMAL	0.028
	730	0.017	11.7	0.10	0	5.0	DRY	0.101

Sub Basin	Land Use Code	Area (sq mi)	Arealnitial Loss (IA) (%)		Percent Impervious (RTIMP)	Vegetable Cover (%)	DTHETA	Kb
Major Basin ID: GP								
		0.144	**100.0**					
YLLP	130	0.363	61.0	0.30	15	30.0	NORMAL	0.085
	240	0.055	9.2	0.10	85	5.0	NORMAL	0.024
	730	0.178	29.9	0.10	0	5.0	DRY	0.085
		0.595	**100.1**					

Future Land Use by Subbasin

Sub Basin	Land Use Code	Area (sq mi)	AreaInitial Loss (IA) (%)		Percent Impervious (RTIMP)	Vegetable Cover (%)	DTHETA	Kb
Major Basin ID: GP								
83RS	140	0.520	81.5	0.25	30	15.0	NORMAL	0.085
	730	0.118	18.5	0.10	0	5.0	DRY	0.085
		0.638	**100.0**					
AC35	140	0.145	19.2	0.25	30	15.0	NORMAL	0.083
	190	0.129	17.1	0.25	45	5.0	NORMAL	0.083
	200	0.064	8.5	0.10	80	5.0	NORMAL	0.023
	250	0.395	52.3	0.10	85	0.0	NORMAL	0.023
	555	0.003	0.3	0.10	5	0.0	DRY	0.023
	610	0.020	2.7	0.10	80	5.0	NORMAL	0.023
		0.755	**100.1**					
AC43	140	0.294	81.1	0.25	30	15.0	NORMAL	0.091
	200	0.051	14.0	0.10	80	5.0	NORMAL	0.025
	520	0.018	4.8	0.29	40	40.0	NORMAL	0.025
		0.362	**99.9**					
AC51	130	0.001	0.2	0.30	15	30.0	NORMAL	0.086
	140	0.486	84.3	0.25	30	15.0	NORMAL	0.086
	150	0.007	1.2	0.25	30	15.0	NORMAL	0.086
	180	0.000		0.25	45	5.0	NORMAL	0.086
	200	0.055	9.5	0.10	80	5.0	NORMAL	0.024
	400	0.001	0.1	0.10	80	5.0	NORMAL	0.086
	520	0.023	3.9	0.29	40	40.0	NORMAL	0.024
	555	0.001	0.1	0.10	5	0.0	DRY	0.024
	710	0.004	0.7	0.10	5	80.0	NORMAL	0.024
		0.577	**100.0**					
AC59	140	0.003	0.4	0.25	30	15.0	NORMAL	0.083
	150	0.289	38.9	0.25	30	15.0	NORMAL	0.083
	170	0.044	6.0	0.25	45	10.0	NORMAL	0.083
	190	0.070	9.4	0.25	45	5.0	NORMAL	0.083
	200	0.057	7.7	0.10	80	5.0	NORMAL	0.023
	400	0.017	2.2	0.10	80	5.0	NORMAL	0.083
	530	0.098	13.2	0.10	80	5.0	NORMAL	0.083
	550	0.004	0.6	0.10	80	10.0	NORMAL	0.023
	710	0.161	21.7	0.10	5	80.0	NORMAL	0.023
		0.742	**100.1**					
AC67	130	0.013	1.8	0.30	15	30.0	NORMAL	0.084
	140	0.431	61.8	0.25	30	15.0	NORMAL	0.084
	150	0.019	2.7	0.25	30	15.0	NORMAL	0.084
	170	0.013	1.8	0.25	45	10.0	NORMAL	0.084
	190	0.050	7.1	0.25	45	5.0	NORMAL	0.084
	200	0.023	3.3	0.10	80	5.0	NORMAL	0.023
	400	0.002	0.3	0.10	80	5.0	NORMAL	0.084
	520	0.023	3.3	0.29	40	40.0	NORMAL	0.023
	550	0.000		0.10	80	10.0	NORMAL	0.023
	710	0.125	17.9	0.10	5	80.0	NORMAL	0.023
	810	0.000		0.10	80	5.0	NORMAL	0.084
		0.698	**100.0**					
AC75	130	0.000		0.30	15	30.0	NORMAL	0.082
	140	0.030	3.6	0.25	30	15.0	NORMAL	0.082
	150	0.420	49.9	0.25	30	15.0	NORMAL	0.082
	170	0.026	3.1	0.25	45	10.0	NORMAL	0.082
	180	0.045	5.3	0.25	45	5.0	NORMAL	0.082
	190	0.032	3.8	0.25	45	5.0	NORMAL	0.082
	200	0.060	7.1	0.10	80	5.0	NORMAL	0.023
	240	0.037	4.4	0.10	85	5.0	NORMAL	0.023

Sub Basin	Land Use Code	Area (sq mi)	AreaInitial Loss (IA) (%)		Percent Impervious (RTIMP)	Vegetable Cover (%)	DTHETA	Kb
Major Basin ID: GP								
AC75	400	0.025	3.0	0.10	80	5.0	NORMAL	0.082
	520	0.000		0.29	40	40.0	NORMAL	0.023
	555	0.009	1.0	0.10	5	0.0	DRY	0.023
	710	0.142	16.8	0.10	5	80.0	NORMAL	0.023
	730	0.005	0.6	0.10	0	5.0	DRY	0.082
	740	0.011	1.2	0.00	0	0.0	WET	0.023
		0.842	**99.8**					
AF11	320	0.375	100.0	0.15	80	0.0	NORMAL	0.025
	730	0.000		0.10	0	5.0	DRY	0.090
		0.375	**100.0**					
BL15	140	0.474	49.3	0.25	30	15.0	NORMAL	0.080
	150	0.305	31.7	0.25	30	15.0	NORMAL	0.080
	190	0.003	0.3	0.25	45	5.0	NORMAL	0.080
	400	0.024	2.5	0.10	80	5.0	NORMAL	0.080
	530	0.010	1.1	0.10	80	5.0	NORMAL	0.080
	720	0.117	12.1	0.10	5	90.0	NORMAL	0.023
	730	0.029	3.0	0.10	0	5.0	DRY	0.080
		0.962	**100.0**					
BL35	150	0.765	67.1	0.25	30	15.0	NORMAL	0.078
	180	0.079	7.0	0.25	45	5.0	NORMAL	0.078
	190	0.035	3.1	0.25	45	5.0	NORMAL	0.078
	200	0.118	10.4	0.10	80	5.0	NORMAL	0.022
	320	0.079	6.9	0.15	80	0.0	NORMAL	0.022
	520	0.026	2.3	0.29	40	40.0	NORMAL	0.022
	610	0.037	3.2	0.10	80	5.0	NORMAL	0.022
		1.139	**100.0**					
BL43	120	0.000		0.30	5	50.0	NORMAL	0.079
	150	0.932	88.8	0.25	30	15.0	NORMAL	0.079
	180	0.048	4.5	0.25	45	5.0	NORMAL	0.079
	200	0.046	4.4	0.10	80	5.0	NORMAL	0.022
	520	0.024	2.3	0.29	40	40.0	NORMAL	0.022
		1.049	**100.0**					
BL51	150	0.791	75.7	0.25	30	15.0	NORMAL	0.079
	180	0.000		0.25	45	5.0	NORMAL	0.079
	200	0.058	5.6	0.10	80	5.0	NORMAL	0.022
	400	0.027	2.6	0.10	80	5.0	NORMAL	0.079
	520	0.023	2.2	0.29	40	40.0	NORMAL	0.022
	720	0.146	14.0	0.10	5	90.0	NORMAL	0.022
		1.045	**100.1**					
BL59	130	0.000		0.30	15	30.0	NORMAL	0.079
	140	0.216	20.1	0.25	30	15.0	NORMAL	0.079
	150	0.477	44.4	0.25	30	15.0	NORMAL	0.079
	180	0.009	0.8	0.25	45	5.0	NORMAL	0.079
	200	0.182	17.0	0.10	80	5.0	NORMAL	0.022
	400	0.016	1.5	0.10	80	5.0	NORMAL	0.079
	520	0.154	14.3	0.29	40	40.0	NORMAL	0.022
	710	0.021	1.9	0.10	5	80.0	NORMAL	0.022
	730	0.000		0.10	0	5.0	DRY	0.079
	810	0.000		0.10	80	5.0	NORMAL	0.079
		1.075	**100.0**					
BL67	120	0.065	27.8	0.30	5	50.0	NORMAL	0.096
	130	0.017	7.1	0.30	15	30.0	NORMAL	0.096
	140	0.004	1.7	0.25	30	15.0	NORMAL	0.096

Sub Basin	Land Use Code	Area (sq mi)	AreaInitial Loss (IA) (%)		Percent Impervious (RTIMP)	Vegetable Cover (%)	DTHETA	Kb
Major Basin ID: GP								
BL67	150	0.000	0.1	0.25	30	15.0	NORMAL	0.096
	180	0.000		0.25	45	5.0	NORMAL	0.096
	190	0.008	3.3	0.25	45	5.0	NORMAL	0.096
	200	0.107	46.0	0.10	80	5.0	NORMAL	0.026
	400	0.032	13.7	0.10	80	5.0	NORMAL	0.096
	555	0.001	0.2	0.10	5	0.0	DRY	0.026
		0.233	**99.9**					
BL75	130	0.721	67.8	0.30	15	30.0	NORMAL	0.079
	150	0.002	0.2	0.25	30	15.0	NORMAL	0.079
	190	0.026	2.5	0.25	45	5.0	NORMAL	0.079
	200	0.152	14.3	0.10	80	5.0	NORMAL	0.022
	240	0.030	2.8	0.10	85	5.0	NORMAL	0.022
	400	0.002	0.2	0.10	80	5.0	NORMAL	0.079
	520	0.001	0.1	0.29	40	40.0	NORMAL	0.022
	710	0.000		0.10	5	80.0	NORMAL	0.022
	730	0.063	5.9	0.10	0	5.0	DRY	0.079
	810	0.065	6.1	0.10	80	5.0	NORMAL	0.079
		1.063	**99.9**					
BL91	140	0.259	28.8	0.25	30	15.0	NORMAL	0.081
	150	0.080	8.9	0.25	30	15.0	NORMAL	0.081
	180	0.194	21.5	0.25	45	5.0	NORMAL	0.081
	200	0.000		0.10	80	5.0	NORMAL	0.023
	220	0.001	0.1	0.10	75	10.0	NORMAL	0.023
	240	0.316	35.1	0.10	85	5.0	NORMAL	0.023
	520	0.001	0.1	0.29	40	40.0	NORMAL	0.023
	530	0.034	3.7	0.10	80	5.0	NORMAL	0.081
	710	0.016	1.8	0.10	5	80.0	NORMAL	0.023
		0.901	**100.0**					
BL99	140	0.678	59.9	0.25	30	15.0	NORMAL	0.078
	180	0.002	0.2	0.25	45	5.0	NORMAL	0.078
	190	0.200	17.6	0.25	45	5.0	NORMAL	0.078
	220	0.120	10.6	0.10	75	10.0	NORMAL	0.022
	400	0.012	1.0	0.10	80	5.0	NORMAL	0.078
	520	0.020	1.7	0.29	40	40.0	NORMAL	0.022
	550	0.004	0.3	0.10	80	10.0	NORMAL	0.022
	720	0.099	8.7	0.10	5	90.0	NORMAL	0.022
		1.133	**100.0**					
BLAF	140	0.039	13.6	0.25	30	15.0	NORMAL	0.094
	150	0.141	49.9	0.25	30	15.0	NORMAL	0.094
	320	0.000		0.15	80	0.0	NORMAL	0.026
	720	0.053	18.5	0.10	5	90.0	NORMAL	0.026
	730	0.051	17.9	0.10	0	5.0	DRY	0.094
		0.283	**99.9**					
BLLO	130	0.215	28.1	0.30	15	30.0	NORMAL	0.083
	150	0.000		0.25	30	15.0	NORMAL	0.083
	190	0.130	17.0	0.25	45	5.0	NORMAL	0.083
	200	0.200	26.2	0.10	80	5.0	NORMAL	0.023
	250	0.135	17.6	0.10	85	0.0	NORMAL	0.023
	400	0.041	5.4	0.10	80	5.0	NORMAL	0.083
	530	0.000		0.10	80	5.0	NORMAL	0.083
	610	0.023	3.0	0.10	80	5.0	NORMAL	0.023
	710	0.021	2.7	0.10	5	80.0	NORMAL	0.023
		0.765	**100.0**					
BLNR	140	0.256	42.3	0.25	30	15.0	NORMAL	0.085

Sub Basin	Land Use Code	Area (sq mi)	AreaInitial Loss (IA) (%)		Percent Impervious (RTIMP)	Vegetable Cover (%)	DTHETA	Kb
Major Basin ID: GP								
BLNR	190	0.025	4.2	0.25	45	5.0	NORMAL	0.085
	200	0.129	21.4	0.10	80	5.0	NORMAL	0.024
	240	0.004	0.6	0.10	85	5.0	NORMAL	0.024
	400	0.045	7.4	0.10	80	5.0	NORMAL	0.085
	520	0.039	6.4	0.29	40	40.0	NORMAL	0.024
	610	0.071	11.7	0.10	80	5.0	NORMAL	0.024
	730	0.036	5.9	0.10	0	5.0	DRY	0.085
	810	0.000		0.10	80	5.0	NORMAL	0.085
		0.604	**99.9**					
BN99	140	0.614	59.1	0.25	30	15.0	NORMAL	0.079
	190	0.144	13.9	0.25	45	5.0	NORMAL	0.079
	220	0.041	4.0	0.10	75	10.0	NORMAL	0.022
	240	0.000		0.10	85	5.0	NORMAL	0.022
	530	0.066	6.4	0.10	80	5.0	NORMAL	0.079
	550	0.015	1.4	0.10	80	10.0	NORMAL	0.022
	720	0.150	14.5	0.10	5	90.0	NORMAL	0.022
	740	0.007	0.7	0.00	0	0.0	WET	0.022
		1.038	**100.0**					
BY07	140	0.350	68.3	0.25	30	15.0	NORMAL	0.087
	180	0.058	11.2	0.25	45	5.0	NORMAL	0.087
	200	0.047	9.1	0.10	80	5.0	NORMAL	0.024
	220	0.026	5.1	0.10	75	10.0	NORMAL	0.024
	520	0.023	4.5	0.29	40	40.0	NORMAL	0.024
	740	0.009	1.8	0.00	0	0.0	WET	0.024
		0.513	**100.0**					
BY87	140	0.691	72.1	0.25	30	15.0	NORMAL	0.080
	180	0.020	2.1	0.25	45	5.0	NORMAL	0.080
	200	0.056	5.9	0.10	80	5.0	NORMAL	0.023
	520	0.127	13.3	0.29	40	40.0	NORMAL	0.023
	555	0.003	0.3	0.10	5	0.0	DRY	0.023
	710	0.061	6.4	0.10	5	80.0	NORMAL	0.023
		0.959	**100.1**					
BY91	140	0.450	89.8	0.25	30	15.0	NORMAL	0.087
	710	0.051	10.2	0.10	5	80.0	NORMAL	0.024
		0.501	**100.0**					
BYAF	140	0.251	41.2	0.25	30	15.0	NORMAL	0.085
	150	0.000		0.25	30	15.0	NORMAL	0.085
	220	0.016	2.5	0.10	75	10.0	NORMAL	0.024
	320	0.097	16.0	0.15	80	0.0	NORMAL	0.024
	550	0.009	1.5	0.10	80	10.0	NORMAL	0.024
	555	0.159	26.2	0.10	5	0.0	DRY	0.024
	720	0.031	5.0	0.10	5	90.0	NORMAL	0.024
	730	0.029	4.8	0.10	0	5.0	DRY	0.085
	740	0.016	2.7	0.00	0	0.0	WET	0.024
		0.609	**99.9**					
BYNR	130	0.186	18.0	0.30	15	30.0	NORMAL	0.079
	140	0.611	59.1	0.25	30	15.0	NORMAL	0.079
	150	0.000		0.25	30	15.0	NORMAL	0.079
	180	0.000		0.25	45	5.0	NORMAL	0.079
	190	0.000		0.25	45	5.0	NORMAL	0.079
	200	0.039	3.8	0.10	80	5.0	NORMAL	0.022
	320	0.000		0.15	80	0.0	NORMAL	0.022
	400	0.071	6.8	0.10	80	5.0	NORMAL	0.079
	520	0.001	0.1	0.29	40	40.0	NORMAL	0.022

Sub Basin	Land Use Code	Area (sq mi)	Area	Initial Loss (IA) (%)	Percent Impervious (RTIMP)	Vegetable Cover (%)	DTHETA	Kb
Major Basin ID: GP								
BYNR	555	0.003	0.2	0.10	5	0.0	DRY	0.022
	610	0.023	2.3	0.10	80	5.0	NORMAL	0.022
	730	0.100	9.7	0.10	0	5.0	DRY	0.079
		1.034	**100.0**					
CL07	130	0.081	15.5	0.30	15	30.0	NORMAL	0.087
	140	0.286	54.6	0.25	30	15.0	NORMAL	0.087
	180	0.000		0.25	45	5.0	NORMAL	0.087
	200	0.019	3.6	0.10	80	5.0	NORMAL	0.024
	240	0.030	5.6	0.10	85	5.0	NORMAL	0.024
	730	0.109	20.7	0.10	0	5.0	DRY	0.087
		0.524	**100.0**					
CL57	120	0.048	6.4	0.30	5	50.0	NORMAL	0.083
	130	0.381	51.1	0.30	15	30.0	NORMAL	0.083
	150	0.034	4.5	0.25	30	15.0	NORMAL	0.083
	180	0.011	1.4	0.25	45	5.0	NORMAL	0.083
	520	0.025	3.4	0.29	40	40.0	NORMAL	0.023
	550	0.083	11.2	0.10	80	10.0	NORMAL	0.023
	730	0.164	22.0	0.10	0	5.0	DRY	0.083
		0.746	**100.0**					
CL67	120	0.125	45.3	0.30	5	50.0	NORMAL	0.094
	130	0.008	2.8	0.30	15	30.0	NORMAL	0.094
	180	0.050	18.3	0.25	45	5.0	NORMAL	0.094
	200	0.026	9.3	0.10	80	5.0	NORMAL	0.026
	230	0.002	0.6	0.10	85	5.0	NORMAL	0.026
	550	0.002	0.8	0.10	80	10.0	NORMAL	0.026
	730	0.063	22.9	0.10	0	5.0	DRY	0.094
		0.275	**100.0**					
CL77	130	0.286	90.4	0.30	15	30.0	NORMAL	0.092
	140	0.002	0.6	0.25	30	15.0	NORMAL	0.092
	555	0.012	3.8	0.10	5	0.0	DRY	0.026
	730	0.017	5.2	0.10	0	5.0	DRY	0.092
		0.316	**100.0**					
CLAF	140	0.125	43.1	0.25	30	15.0	NORMAL	0.093
	180	0.000		0.25	45	5.0	NORMAL	0.093
	190	0.000	0.1	0.25	45	5.0	NORMAL	0.093
	200	0.042	14.5	0.10	80	5.0	NORMAL	0.026
	320	0.000		0.15	80	0.0	NORMAL	0.026
	730	0.122	42.2	0.10	0	5.0	DRY	0.093
		0.289	**99.9**					
CT35	140	0.527	54.0	0.25	30	15.0	NORMAL	0.080
	190	0.115	11.7	0.25	45	5.0	NORMAL	0.080
	200	0.121	12.4	0.10	80	5.0	NORMAL	0.023
	320	0.162	16.6	0.15	80	0.0	NORMAL	0.023
	520	0.024	2.4	0.29	40	40.0	NORMAL	0.023
	610	0.027	2.8	0.10	80	5.0	NORMAL	0.023
		0.976	**99.9**					
CT43	140	0.779	78.2	0.25	30	15.0	NORMAL	0.080
	180	0.015	1.5	0.25	45	5.0	NORMAL	0.080
	190	0.027	2.7	0.25	45	5.0	NORMAL	0.080
	200	0.095	9.6	0.10	80	5.0	NORMAL	0.022
	320	0.031	3.1	0.15	80	0.0	NORMAL	0.022
	520	0.024	2.4	0.29	40	40.0	NORMAL	0.022
	550	0.008	0.8	0.10	80	10.0	NORMAL	0.022

Sub Basin	Land Use Code	Area (sq mi)	Area	Initial Loss (IA) (%)	Percent Impervious (RTIMP)	Vegetable Cover (%)	DTHETA	Kb
Major Basin ID: GP								
CT43	710	0.017	1.7	0.10	5	80.0	NORMAL	0.022
		0.996	**100.0**					
CT51	140	0.452	45.8	0.25	30	15.0	NORMAL	0.080
	200	0.043	4.3	0.10	80	5.0	NORMAL	0.022
	520	0.034	3.4	0.29	40	40.0	NORMAL	0.022
	550	0.459	46.5	0.10	80	10.0	NORMAL	0.022
		0.988	**100.0**					
DV07	130	0.121	18.7	0.30	15	30.0	NORMAL	0.085
	140	0.524	81.3	0.25	30	15.0	NORMAL	0.085
	150	0.000		0.25	30	15.0	NORMAL	0.085
	220	0.000		0.10	75	10.0	NORMAL	0.024
		0.645	**100.0**					
DV56	140	0.013	4.7	0.25	30	15.0	NORMAL	0.093
	730	0.260	90.5	0.10	0	5.0	DRY	0.093
	740	0.014	4.8	0.00	0	0.0	WET	0.026
		0.287	**100.0**					
DV67	130	0.093	18.5	0.30	15	30.0	NORMAL	0.087
	140	0.152	30.3	0.25	30	15.0	NORMAL	0.087
	150	0.000	0.1	0.25	30	15.0	NORMAL	0.087
	200	0.000		0.10	80	5.0	NORMAL	0.024
	720	0.047	9.3	0.10	5	90.0	NORMAL	0.024
	730	0.211	41.8	0.10	0	5.0	DRY	0.087
		0.503	**100.0**					
DV75	120	0.009	1.9	0.30	5	50.0	NORMAL	0.087
	130	0.000		0.30	15	30.0	NORMAL	0.087
	140	0.071	14.2	0.25	30	15.0	NORMAL	0.087
	150	0.287	57.3	0.25	30	15.0	NORMAL	0.087
	170	0.058	11.6	0.25	45	10.0	NORMAL	0.087
	190	0.003	0.6	0.25	45	5.0	NORMAL	0.087
	200	0.026	5.2	0.10	80	5.0	NORMAL	0.024
	320	0.000		0.15	80	0.0	NORMAL	0.024
	520	0.031	6.3	0.29	40	40.0	NORMAL	0.024
	550	0.000		0.10	80	10.0	NORMAL	0.024
	710	0.014	2.8	0.10	5	80.0	NORMAL	0.024
	730	0.000		0.10	0	5.0	DRY	0.087
		0.501	**99.9**					
DV83	130	0.000	0.2	0.30	15	30.0	NORMAL	0.104
	140	0.106	99.7	0.25	30	15.0	NORMAL	0.104
	200	0.000	0.1	0.10	80	5.0	NORMAL	0.029
		0.107	**100.0**					
DV87	130	1.002	99.8	0.30	15	30.0	NORMAL	0.080
	140	0.002	0.2	0.25	30	15.0	NORMAL	0.080
	200	0.000		0.10	80	5.0	NORMAL	0.022
		1.004	**100.0**					
DV99	130	0.732	60.1	0.30	15	30.0	NORMAL	0.078
	140	0.162	13.3	0.25	30	15.0	NORMAL	0.078
	150	0.186	15.2	0.25	30	15.0	NORMAL	0.078
	240	0.012	1.0	0.10	85	5.0	NORMAL	0.022
	520	0.110	9.0	0.29	40	40.0	NORMAL	0.022
	710	0.016	1.3	0.10	5	80.0	NORMAL	0.022
		1.217	**99.9**					

Sub Basin	Land Use Code	Area (sq mi)	AreaInitial Loss (IA) (%)		Percent Impervious (RTIMP)	Vegetable Cover (%)	DTHETA	Kb
Major Basin ID: GP								
DVAF	120	0.004	0.9	0.30	5	50.0	NORMAL	0.089
	130	0.005	1.2	0.30	15	30.0	NORMAL	0.089
	140	0.127	30.7	0.25	30	15.0	NORMAL	0.089
	150	0.006	1.4	0.25	30	15.0	NORMAL	0.089
	320	0.000		0.15	80	0.0	NORMAL	0.025
	710	0.004	0.8	0.10	5	80.0	NORMAL	0.025
	730	0.267	64.9	0.10	0	5.0	DRY	0.089
		0.412	**99.9**					
DVLP	130	0.022	16.0	0.30	15	30.0	NORMAL	0.102
	140	0.032	23.4	0.25	30	15.0	NORMAL	0.102
	150	0.057	41.9	0.25	30	15.0	NORMAL	0.102
	220	0.000	0.1	0.10	75	10.0	NORMAL	0.028
	240	0.025	18.7	0.10	85	5.0	NORMAL	0.028
		0.136	**100.1**					
DVNR	130	0.000	0.1	0.30	15	30.0	NORMAL	0.090
	140	0.330	82.2	0.25	30	15.0	NORMAL	0.090
	150	0.002	0.5	0.25	30	15.0	NORMAL	0.090
	170	0.002	0.4	0.25	45	10.0	NORMAL	0.090
	320	0.039	9.8	0.15	80	0.0	NORMAL	0.025
	400	0.000		0.10	80	5.0	NORMAL	0.090
	730	0.028	6.9	0.10	0	5.0	DRY	0.090
		0.401	**99.9**					
DW07	140	0.078	16.1	0.25	30	15.0	NORMAL	0.088
	190	0.205	42.4	0.25	45	5.0	NORMAL	0.088
	200	0.000		0.10	80	5.0	NORMAL	0.024
	220	0.011	2.3	0.10	75	10.0	NORMAL	0.024
	530	0.003	0.6	0.10	80	5.0	NORMAL	0.088
	720	0.187	38.6	0.10	5	90.0	NORMAL	0.024
		0.484	**100.0**					
DW99	140	0.033	21.5	0.25	30	15.0	NORMAL	0.100
	180	0.001	0.4	0.25	45	5.0	NORMAL	0.100
	190	0.053	34.4	0.25	45	5.0	NORMAL	0.100
	220	0.015	9.8	0.10	75	10.0	NORMAL	0.028
	550	0.007	4.7	0.10	80	10.0	NORMAL	0.028
	555	0.008	5.1	0.10	5	0.0	DRY	0.028
	720	0.038	24.2	0.10	5	90.0	NORMAL	0.028
		0.155	**100.1**					
GHAF	200	0.000		0.10	80	5.0	NORMAL	0.024
	320	0.493	87.5	0.15	80	0.0	NORMAL	0.024
	550	0.039	6.9	0.10	80	10.0	NORMAL	0.024
	620	0.030	5.2	0.15	55	5.0	NORMAL	0.024
	730	0.002	0.3	0.10	0	5.0	DRY	0.086
		0.563	**99.9**					
GHNR	200	0.000		0.10	80	5.0	NORMAL	0.023
	320	0.145	17.3	0.15	80	0.0	NORMAL	0.023
	620	0.462	54.9	0.15	55	5.0	NORMAL	0.023
	730	0.229	27.2	0.10	0	5.0	DRY	0.082
	810	0.005	0.6	0.10	80	5.0	NORMAL	0.082
		0.841	**100.0**					
GL03	140	0.004	0.6	0.25	30	15.0	NORMAL	0.085
	150	0.002	0.4	0.25	30	15.0	NORMAL	0.085
	320	0.000		0.15	80	0.0	NORMAL	0.024
	620	0.000		0.15	55	5.0	NORMAL	0.024

Sub Basin	Land Use Code	Area (sq mi)	AreaInitial Loss (IA) (%)		Percent Impervious (RTIMP)	Vegetable Cover (%)	DTHETA	Kb
Major Basin ID: GP								
GL03	730	0.100	15.4	0.10	0	5.0	DRY	0.085
	810	0.543	83.6	0.10	80	5.0	NORMAL	0.085
		0.649	**100.0**					
GL11	140	0.002	0.4	0.25	30	15.0	NORMAL	0.089
	150	0.244	57.2	0.25	30	15.0	NORMAL	0.089
	200	0.011	2.6	0.10	80	5.0	NORMAL	0.025
	320	0.003	0.6	0.15	80	0.0	NORMAL	0.025
	730	0.000		0.10	0	5.0	DRY	0.089
	810	0.166	39.1	0.10	80	5.0	NORMAL	0.089
		0.426	**99.9**					
GL14	150	0.001	0.2	0.25	30	15.0	NORMAL	0.088
	320	0.480	99.7	0.15	80	0.0	NORMAL	0.024
	730	0.000	0.1	0.10	0	5.0	DRY	0.088
	810	0.000		0.10	80	5.0	NORMAL	0.088
		0.481	**100.0**					
GLAF	320	0.388	99.8	0.15	80	0.0	NORMAL	0.025
	710	0.000	0.1	0.10	5	80.0	NORMAL	0.025
	730	0.000	0.1	0.10	0	5.0	DRY	0.090
		0.388	**100.0**					
GLGH	200	0.009	11.5	0.10	80	5.0	NORMAL	0.029
	620	0.000	0.1	0.15	55	5.0	NORMAL	0.029
	810	0.070	88.4	0.10	80	5.0	NORMAL	0.107
		0.079	**100.0**					
GR99	140	0.781	59.6	0.25	30	15.0	NORMAL	0.077
	190	0.067	5.1	0.25	45	5.0	NORMAL	0.077
	220	0.019	1.4	0.10	75	10.0	NORMAL	0.022
	230	0.096	7.3	0.10	85	5.0	NORMAL	0.022
	400	0.108	8.2	0.10	80	5.0	NORMAL	0.077
	530	0.076	5.8	0.10	80	5.0	NORMAL	0.077
	610	0.031	2.4	0.10	80	5.0	NORMAL	0.022
	720	0.129	9.8	0.10	5	90.0	NORMAL	0.022
	740	0.003	0.2	0.00	0	0.0	WET	0.022
		1.310	**99.8**					
GRAF	140	0.335	39.0	0.25	30	15.0	NORMAL	0.081
	190	0.397	46.2	0.25	45	5.0	NORMAL	0.081
	230	0.010	1.1	0.10	85	5.0	NORMAL	0.023
	320	0.006	0.7	0.15	80	0.0	NORMAL	0.023
	530	0.008	0.9	0.10	80	5.0	NORMAL	0.081
	610	0.025	2.9	0.10	80	5.0	NORMAL	0.023
	720	0.077	9.0	0.10	5	90.0	NORMAL	0.023
	730	0.002	0.2	0.10	0	5.0	DRY	0.081
		0.859	**100.0**					
GRNR	140	0.243	25.6	0.25	30	15.0	NORMAL	0.080
	150	0.046	4.9	0.25	30	15.0	NORMAL	0.080
	180	0.068	7.1	0.25	45	5.0	NORMAL	0.080
	190	0.068	7.1	0.25	45	5.0	NORMAL	0.080
	220	0.314	33.1	0.10	75	10.0	NORMAL	0.023
	240	0.000		0.10	85	5.0	NORMAL	0.023
	610	0.088	9.3	0.10	80	5.0	NORMAL	0.023
	710	0.009	0.9	0.10	5	80.0	NORMAL	0.023
	730	0.114	12.0	0.10	0	5.0	DRY	0.080
		0.948	**100.0**					

Sub Basin	Land Use Code	Area (sq mi)	AreaInitial Loss (IA) (%)		Percent Impervious (RTIMP)	Vegetable Cover (%)	DTHETA	Kb
Major Basin ID: GP								
GW35	140	0.231	22.9	0.25	30	15.0	NORMAL	0.080
	150	0.318	31.5	0.25	30	15.0	NORMAL	0.080
	170	0.028	2.8	0.25	45	10.0	NORMAL	0.080
	180	0.000		0.25	45	5.0	NORMAL	0.080
	190	0.053	5.2	0.25	45	5.0	NORMAL	0.080
	200	0.065	6.4	0.10	80	5.0	NORMAL	0.022
	220	0.000		0.10	75	10.0	NORMAL	0.022
	320	0.187	18.5	0.15	80	0.0	NORMAL	0.022
	520	0.046	4.6	0.29	40	40.0	NORMAL	0.022
	610	0.033	3.3	0.10	80	5.0	NORMAL	0.022
	710	0.048	4.8	0.10	5	80.0	NORMAL	0.022
		1.008	**100.0**					
GW43	120	0.125	12.7	0.30	5	50.0	NORMAL	0.080
	140	0.000		0.25	30	15.0	NORMAL	0.080
	150	0.426	43.1	0.25	30	15.0	NORMAL	0.080
	180	0.185	18.8	0.25	45	5.0	NORMAL	0.080
	190	0.023	2.3	0.25	45	5.0	NORMAL	0.080
	200	0.105	10.7	0.10	80	5.0	NORMAL	0.022
	220	0.008	0.8	0.10	75	10.0	NORMAL	0.022
	520	0.115	11.7	0.29	40	40.0	NORMAL	0.022
		0.988	**100.1**					
GW51	120	0.493	51.2	0.30	5	50.0	NORMAL	0.080
	150	0.360	37.4	0.25	30	15.0	NORMAL	0.080
	200	0.071	7.4	0.10	80	5.0	NORMAL	0.023
	520	0.020	2.1	0.29	40	40.0	NORMAL	0.023
	710	0.018	1.9	0.10	5	80.0	NORMAL	0.023
		0.962	**100.0**					
GW59	120	0.004	0.4	0.30	5	50.0	NORMAL	0.080
	130	0.359	38.0	0.30	15	30.0	NORMAL	0.080
	150	0.184	19.4	0.25	30	15.0	NORMAL	0.080
	200	0.093	9.9	0.10	80	5.0	NORMAL	0.023
	400	0.000		0.10	80	5.0	NORMAL	0.080
	520	0.029	3.0	0.29	40	40.0	NORMAL	0.023
	710	0.019	2.0	0.10	5	80.0	NORMAL	0.023
	810	0.257	27.2	0.10	80	5.0	NORMAL	0.080
		0.944	**99.9**					
GW67	130	0.058	6.5	0.30	15	30.0	NORMAL	0.081
	140	0.097	10.9	0.25	30	15.0	NORMAL	0.081
	150	0.438	49.0	0.25	30	15.0	NORMAL	0.081
	180	0.017	1.8	0.25	45	5.0	NORMAL	0.081
	190	0.038	4.3	0.25	45	5.0	NORMAL	0.081
	200	0.112	12.6	0.10	80	5.0	NORMAL	0.023
	400	0.041	4.6	0.10	80	5.0	NORMAL	0.081
	520	0.080	8.9	0.29	40	40.0	NORMAL	0.023
	710	0.011	1.2	0.10	5	80.0	NORMAL	0.023
	810	0.000		0.10	80	5.0	NORMAL	0.081
		0.892	**99.8**					
GW91	140	0.316	66.3	0.25	30	15.0	NORMAL	0.088
	150	0.000		0.25	30	15.0	NORMAL	0.088
	240	0.125	26.2	0.10	85	5.0	NORMAL	0.024
	555	0.009	1.9	0.10	5	0.0	DRY	0.024
	720	0.027	5.6	0.10	5	90.0	NORMAL	0.024
		0.477	**100.0**					
GWLO	120	0.016	1.9	0.30	5	50.0	NORMAL	0.082

Sub Basin	Land Use Code	Area (sq mi)	AreaInitial Loss (IA) (%)		Percent Impervious (RTIMP)	Vegetable Cover (%)	DTHETA	Kb
Major Basin ID: GP								
GWLO	140	0.002	0.2	0.25	30	15.0	NORMAL	0.082
	200	0.015	1.8	0.10	80	5.0	NORMAL	0.023
	240	0.514	62.3	0.10	85	5.0	NORMAL	0.023
	610	0.034	4.1	0.10	80	5.0	NORMAL	0.023
	710	0.237	28.7	0.10	5	80.0	NORMAL	0.023
	810	0.009	1.1	0.10	80	5.0	NORMAL	0.082
		0.825	**100.1**					
GWNR	140	0.340	48.3	0.25	30	15.0	NORMAL	0.084
	150	0.000		0.25	30	15.0	NORMAL	0.084
	240	0.107	15.2	0.10	85	5.0	NORMAL	0.023
	520	0.026	3.8	0.29	40	40.0	NORMAL	0.023
	610	0.058	8.2	0.10	80	5.0	NORMAL	0.023
	710	0.042	6.0	0.10	5	80.0	NORMAL	0.023
	730	0.131	18.6	0.10	0	5.0	DRY	0.084
		0.704	**100.1**					
HV01	140	0.258	58.1	0.25	30	15.0	NORMAL	0.089
	240	0.140	31.5	0.10	85	5.0	NORMAL	0.025
	400	0.046	10.3	0.10	80	5.0	NORMAL	0.089
		0.444	**99.9**					
HV07	140	0.281	92.2	0.25	30	15.0	NORMAL	0.093
	180	0.019	6.3	0.25	45	5.0	NORMAL	0.093
	240	0.003	1.0	0.10	85	5.0	NORMAL	0.026
	730	0.002	0.5	0.10	0	5.0	DRY	0.093
		0.304	**100.0**					
HV55	120	0.267	13.0	0.30	5	50.0	NORMAL	0.072
	130	0.000		0.30	15	30.0	NORMAL	0.072
	140	1.218	59.3	0.25	30	15.0	NORMAL	0.072
	150	0.000		0.25	30	15.0	NORMAL	0.072
	200	0.019	0.9	0.10	80	5.0	NORMAL	0.021
	550	0.000		0.10	80	10.0	NORMAL	0.021
	720	0.010	0.5	0.10	5	90.0	NORMAL	0.021
	730	0.540	26.3	0.10	0	5.0	DRY	0.072
		2.055	**100.0**					
HV67	120	0.150	27.5	0.30	5	50.0	NORMAL	0.086
	140	0.113	20.7	0.25	30	15.0	NORMAL	0.086
	150	0.118	21.7	0.25	30	15.0	NORMAL	0.086
	180	0.001	0.1	0.25	45	5.0	NORMAL	0.086
	200	0.027	5.0	0.10	80	5.0	NORMAL	0.024
	230	0.000		0.10	85	5.0	NORMAL	0.024
	550	0.000		0.10	80	10.0	NORMAL	0.024
	730	0.136	24.9	0.10	0	5.0	DRY	0.086
		0.544	**99.9**					
HV75	120	0.015	1.5	0.30	5	50.0	NORMAL	0.080
	140	0.810	84.5	0.25	30	15.0	NORMAL	0.080
	150	0.004	0.5	0.25	30	15.0	NORMAL	0.080
	200	0.002	0.2	0.10	80	5.0	NORMAL	0.023
	230	0.000		0.10	85	5.0	NORMAL	0.023
	520	0.048	5.0	0.29	40	40.0	NORMAL	0.023
	730	0.080	8.3	0.10	0	5.0	DRY	0.080
		0.958	**100.0**					
HV83	130	0.015	43.4	0.30	15	30.0	NORMAL	0.116
	140	0.019	52.9	0.25	30	15.0	NORMAL	0.116
	730	0.001	3.7	0.10	0	5.0	DRY	0.116

Sub Basin	Land Use Code	Area (sq mi)	AreaInitial Loss (IA) (%)	Percent Impervious (RTIMP)	Vegetable Cover (%)	DTHETA	Kb
Major Basin ID: GP							
		0.035	**100.0**				
HV87	130	0.036	12.7	0.30	15	30.0	NORMAL	0.093
	730	0.249	87.3	0.10	0	5.0	DRY	0.093
		0.285	**100.0**				
HV93	130	0.125	72.5	0.30	15	30.0	NORMAL	0.099
	550	0.000	0.1	0.10	80	10.0	NORMAL	0.027
	730	0.047	27.5	0.10	0	5.0	DRY	0.099
		0.172	**100.1**				
HVAF	140	0.183	85.2	0.25	30	15.0	NORMAL	0.097
	180	0.002	0.9	0.25	45	5.0	NORMAL	0.097
	190	0.029	13.5	0.25	45	5.0	NORMAL	0.097
	730	0.001	0.5	0.10	0	5.0	DRY	0.097
		0.215	**100.1**				
HVLP	130	0.087	44.2	0.30	15	30.0	NORMAL	0.097
	140	0.020	10.1	0.25	30	15.0	NORMAL	0.097
	240	0.085	43.2	0.10	85	5.0	NORMAL	0.027
	550	0.005	2.5	0.10	80	10.0	NORMAL	0.027
		0.198	**100.0**				
HVNR	140	0.000	0.1	0.25	30	15.0	NORMAL	0.097
	730	0.202	99.9	0.10	0	5.0	DRY	0.097
		0.202	**100.0**				
HVRS	130	0.010	1.6	0.30	15	30.0	NORMAL	0.085
	140	0.517	82.1	0.25	30	15.0	NORMAL	0.085
	730	0.103	16.3	0.10	0	5.0	DRY	0.085
		0.630	**100.0**				
JM63	130	0.017	2.0	0.30	15	30.0	NORMAL	0.082
	140	0.522	62.2	0.25	30	15.0	NORMAL	0.082
	555	0.129	15.3	0.10	5	0.0	DRY	0.023
	720	0.053	6.3	0.10	5	90.0	NORMAL	0.023
	730	0.119	14.1	0.10	0	5.0	DRY	0.082
		0.840	**99.9**				
JM67	120	0.060	15.8	0.30	5	50.0	NORMAL	0.090
	140	0.234	61.5	0.25	30	15.0	NORMAL	0.090
	150	0.014	3.7	0.25	30	15.0	NORMAL	0.090
	730	0.073	19.0	0.10	0	5.0	DRY	0.090
		0.381	**100.0**				
JM75	130	0.004	0.4	0.30	15	30.0	NORMAL	0.079
	140	0.587	52.8	0.25	30	15.0	NORMAL	0.079
	730	0.521	46.8	0.10	0	5.0	DRY	0.079
		1.112	**100.0**				
JM76	140	0.125	74.1	0.25	30	15.0	NORMAL	0.099
	730	0.044	25.9	0.10	0	5.0	DRY	0.099
		0.169	**100.0**				
JM80	140	0.157	95.4	0.25	30	15.0	NORMAL	0.099
	730	0.008	4.6	0.10	0	5.0	DRY	0.099
		0.164	**100.0**				
JM99	140	0.519	91.3	0.25	30	15.0	NORMAL	0.086
	200	0.033	5.7	0.10	80	5.0	NORMAL	0.024

Sub Basin	Land Use Code	Area (sq mi)	AreaInitial Loss (IA) (%)	Percent Impervious (RTIMP)	Vegetable Cover (%)	DTHETA	Kb
Major Basin ID: GP							
JM99	730	0.017	2.9	0.10	0	5.0	DRY	0.086
		0.568	**99.9**				
JMAF	140	0.091	61.8	0.25	30	15.0	NORMAL	0.101
	730	0.056	38.2	0.10	0	5.0	DRY	0.101
		0.147	**100.0**				
JMLP	130	0.071	10.0	0.30	15	30.0	NORMAL	0.084
	140	0.557	79.0	0.25	30	15.0	NORMAL	0.084
	200	0.055	7.8	0.10	80	5.0	NORMAL	0.023
	710	0.000		0.10	5	80.0	NORMAL	0.023
	730	0.023	3.2	0.10	0	5.0	DRY	0.084
		0.705	**100.0**				
JMNR	140	0.065	43.8	0.25	30	15.0	NORMAL	0.101
	730	0.084	56.2	0.10	0	5.0	DRY	0.101
		0.149	**100.0**				
JMRS	140	0.489	86.2	0.25	30	15.0	NORMAL	0.086
	730	0.078	13.8	0.10	0	5.0	DRY	0.086
		0.567	**100.0**				
LO51	130	0.022	1.9	0.30	15	30.0	NORMAL	0.079
	140	0.403	35.7	0.25	30	15.0	NORMAL	0.079
	150	0.129	11.4	0.25	30	15.0	NORMAL	0.079
	400	0.022	1.9	0.10	80	5.0	NORMAL	0.079
	610	0.082	7.3	0.10	80	5.0	NORMAL	0.022
	730	0.285	25.3	0.10	0	5.0	DRY	0.079
	740	0.186	16.5	0.00	0	0.0	WET	0.022
		1.130	**100.0**				
LO67	130	0.021	1.7	0.30	15	30.0	NORMAL	0.078
	140	0.144	11.8	0.25	30	15.0	NORMAL	0.078
	150	0.598	49.1	0.25	30	15.0	NORMAL	0.078
	170	0.029	2.3	0.25	45	10.0	NORMAL	0.078
	190	0.011	0.9	0.25	45	5.0	NORMAL	0.078
	200	0.089	7.3	0.10	80	5.0	NORMAL	0.022
	520	0.023	1.9	0.29	40	40.0	NORMAL	0.022
	610	0.090	7.4	0.10	80	5.0	NORMAL	0.022
	710	0.008	0.6	0.10	5	80.0	NORMAL	0.022
	720	0.205	16.8	0.10	5	90.0	NORMAL	0.022
	740	0.000		0.00	0	0.0	WET	0.022
		1.217	**99.8**				
LO75	130	0.000		0.30	15	30.0	NORMAL	0.080
	140	0.617	63.7	0.25	30	15.0	NORMAL	0.080
	150	0.196	20.2	0.25	30	15.0	NORMAL	0.080
	190	0.047	4.8	0.25	45	5.0	NORMAL	0.080
	200	0.000		0.10	80	5.0	NORMAL	0.023
	400	0.000		0.10	80	5.0	NORMAL	0.080
	520	0.023	2.4	0.29	40	40.0	NORMAL	0.023
	550	0.005	0.5	0.10	80	10.0	NORMAL	0.023
	610	0.066	6.8	0.10	80	5.0	NORMAL	0.023
	710	0.016	1.6	0.10	5	80.0	NORMAL	0.023
		0.970	**100.0**				
MEAF	140	0.620	45.3	0.25	30	15.0	NORMAL	0.076
	150	0.137	10.0	0.25	30	15.0	NORMAL	0.076
	200	0.009	0.6	0.10	80	5.0	NORMAL	0.022
	220	0.137	10.0	0.10	75	10.0	NORMAL	0.022

Sub Basin	Land Use Code	Area (sq mi)	Areainitial Loss (IA) (%)		Percent Impervious (RTIMP)	Vegetable Cover (%)	DTHETA	Kb
Major Basin ID: GP								
MEAF	230	0.007	0.5	0.10	85	5.0	NORMAL	0.022
	320	0.166	12.1	0.15	80	0.0	NORMAL	0.022
	400	0.000		0.10	80	5.0	NORMAL	0.076
	520	0.000		0.29	40	40.0	NORMAL	0.022
	555	0.000		0.10	5	0.0	DRY	0.022
	710	0.090	6.6	0.10	5	80.0	NORMAL	0.022
	720	0.105	7.7	0.10	5	90.0	NORMAL	0.022
	730	0.098	7.2	0.10	0	5.0	DRY	0.076
		1.369	**100.0**					
NO07	140	0.161	47.4	0.25	30	15.0	NORMAL	0.092
	150	0.018	5.1	0.25	30	15.0	NORMAL	0.092
	180	0.000		0.25	45	5.0	NORMAL	0.092
	190	0.059	17.5	0.25	45	5.0	NORMAL	0.092
	200	0.006	1.8	0.10	80	5.0	NORMAL	0.025
	520	0.005	1.5	0.29	40	40.0	NORMAL	0.025
	550	0.011	3.1	0.10	80	10.0	NORMAL	0.025
	720	0.080	23.6	0.10	5	90.0	NORMAL	0.025
		0.340	**100.0**					
NO11	140	0.012	1.4	0.25	30	15.0	NORMAL	0.081
	150	0.349	40.6	0.25	30	15.0	NORMAL	0.081
	230	0.000		0.10	85	5.0	NORMAL	0.023
	320	0.377	43.8	0.15	80	0.0	NORMAL	0.023
	520	0.046	5.4	0.29	40	40.0	NORMAL	0.023
	550	0.013	1.5	0.10	80	10.0	NORMAL	0.023
	710	0.000		0.10	5	80.0	NORMAL	0.023
	720	0.025	2.9	0.10	5	90.0	NORMAL	0.023
	730	0.038	4.4	0.10	0	5.0	DRY	0.081
		0.860	**100.0**					
NO99	140	0.087	10.2	0.25	30	15.0	NORMAL	0.082
	150	0.473	55.1	0.25	30	15.0	NORMAL	0.082
	180	0.091	10.6	0.25	45	5.0	NORMAL	0.082
	200	0.039	4.6	0.10	80	5.0	NORMAL	0.023
	220	0.000		0.10	75	10.0	NORMAL	0.023
	710	0.000		0.10	5	80.0	NORMAL	0.023
	720	0.070	8.1	0.10	5	90.0	NORMAL	0.023
	730	0.097	11.3	0.10	0	5.0	DRY	0.082
		0.859	**99.9**					
NOAF	320	0.083	29.1	0.15	80	0.0	NORMAL	0.026
	710	0.135	47.4	0.10	5	80.0	NORMAL	0.026
	730	0.067	23.4	0.10	0	5.0	DRY	0.093
		0.285	**99.9**					
NONR	130	0.157	18.9	0.30	15	30.0	NORMAL	0.082
	140	0.440	53.0	0.25	30	15.0	NORMAL	0.082
	150	0.000		0.25	30	15.0	NORMAL	0.082
	190	0.000		0.25	45	5.0	NORMAL	0.082
	200	0.125	15.0	0.10	80	5.0	NORMAL	0.023
	240	0.000		0.10	85	5.0	NORMAL	0.023
	320	0.005	0.6	0.15	80	0.0	NORMAL	0.023
	550	0.000		0.10	80	10.0	NORMAL	0.023
	610	0.062	7.4	0.10	80	5.0	NORMAL	0.023
	730	0.004	0.4	0.10	0	5.0	DRY	0.082
	810	0.038	4.5	0.10	80	5.0	NORMAL	0.082
		0.830	**99.8**					
OL03	130	0.000		0.30	15	30.0	NORMAL	0.079

* Non default value

Sub Basin	Land Use Code	Area (sq mi)	Areainitial Loss (IA) (%)		Percent Impervious (RTIMP)	Vegetable Cover (%)	DTHETA	Kb
Major Basin ID: GP								
OL03	140	0.552	50.2	0.25	30	15.0	NORMAL	0.079
	150	0.000		0.25	30	15.0	NORMAL	0.079
	180	0.141	12.8	0.25	45	5.0	NORMAL	0.079
	190	0.175	15.9	0.25	45	5.0	NORMAL	0.079
	220	0.004	0.3	0.10	75	10.0	NORMAL	0.022
	230	0.021	1.9	0.10	85	5.0	NORMAL	0.022
	520	0.005	0.4	0.29	40	40.0	NORMAL	0.022
	530	0.012	1.1	0.10	80	5.0	NORMAL	0.079
	550	0.012	1.1	0.10	80	10.0	NORMAL	0.022
	710	0.018	1.7	0.10	5	80.0	NORMAL	0.022
	720	0.161	14.7	0.10	5	90.0	NORMAL	0.022
		1.099	**100.1**					
OL11	120	0.047	13.7	0.30	5	50.0	NORMAL	0.092
	130	0.141	41.5	0.30	15	30.0	NORMAL	0.092
	140	0.026	7.6	0.25	30	15.0	NORMAL	0.092
	150	0.000	0.1	0.25	30	15.0	NORMAL	0.092
	180	0.066	19.6	0.25	45	5.0	NORMAL	0.092
	190	0.023	6.7	0.25	45	5.0	NORMAL	0.092
	220	0.000	0.1	0.10	75	10.0	NORMAL	0.025
	230	0.001	0.2	0.10	85	5.0	NORMAL	0.025
	530	0.001	0.4	0.10	80	5.0	NORMAL	0.092
	550	0.000		0.10	80	10.0	NORMAL	0.025
	555	0.005	1.4	0.10	5	0.0	DRY	0.025
	720	0.030	8.8	0.10	5	90.0	NORMAL	0.025
		0.339	**100.1**					
OL99	140	0.150	34.4	0.25	30	15.0	NORMAL	0.089
	180	0.048	11.1	0.25	45	5.0	NORMAL	0.089
	190	0.070	16.0	0.25	45	5.0	NORMAL	0.089
	240	0.025	5.6	0.10	85	5.0	NORMAL	0.025
	530	0.004	0.8	0.10	80	5.0	NORMAL	0.089
	710	0.030	6.8	0.10	5	80.0	NORMAL	0.025
	720	0.018	4.2	0.10	5	90.0	NORMAL	0.025
	730	0.092	21.1	0.10	0	5.0	DRY	0.089
	810	0.000		0.10	80	5.0	NORMAL	0.089
		0.437	**100.0**					
OLAF	120	0.090	8.7	0.30	5	50.0	NORMAL	0.080
	130	0.056	5.4	0.30	15	30.0	NORMAL	0.080
	140	0.003	0.3	0.25	30	15.0	NORMAL	0.080
	150	0.506	49.3	0.25	30	15.0	NORMAL	0.080
	180	0.015	1.4	0.25	45	5.0	NORMAL	0.080
	200	0.033	3.2	0.10	80	5.0	NORMAL	0.022
	220	0.003	0.3	0.10	75	10.0	NORMAL	0.022
	230	0.037	3.6	0.10	85	5.0	NORMAL	0.022
	320	0.000		0.15	80	0.0	NORMAL	0.022
	520	0.000		0.29	40	40.0	NORMAL	0.022
	530	0.033	3.3	0.10	80	5.0	NORMAL	0.080
	555	0.054	5.2	0.10	5	0.0	DRY	0.022
	730	0.197	19.1	0.10	0	5.0	DRY	0.080
		1.027	**99.8**					
OLNR	140	0.000		0.25	30	15.0	NORMAL	0.084
	150	0.487	70.0	0.25	30	15.0	NORMAL	0.084
	180	0.108	15.5	0.25	45	5.0	NORMAL	0.084
	190	0.021	3.0	0.25	45	5.0	NORMAL	0.084
	550	0.002	0.3	0.10	80	10.0	NORMAL	0.023
	610	0.044	6.3	0.10	80	5.0	NORMAL	0.023
	730	0.006	0.9	0.10	0	5.0	DRY	0.084

* Non default value

Sub Basin	Land Use Code	Area (sq mi)	AreaInitial Loss (IA) (%)		Percent Impervious (RTIMP)	Vegetable Cover (%)	DTHETA	Kb
Major Basin ID: GP								
OLNR	810	0.028	4.0	0.10	80	5.0	NORMAL	0.084
		0.696	**100.0**					
PE03	140	0.199	48.5	0.25	30	15.0	NORMAL	0.090
	190	0.064	15.7	0.25	45	5.0	NORMAL	0.090
	230	0.012	2.9	0.10	85	5.0	NORMAL	0.025
	530	0.015	3.7	0.10	80	5.0	NORMAL	0.090
	610	0.001	0.3	0.10	80	5.0	NORMAL	0.025
	720	0.118	28.9	0.10	5	90.0	NORMAL	0.025
		0.409	**100.0**					
PE07	140	0.275	47.8	0.25	30	15.0	NORMAL	0.086
	190	0.052	9.1	0.25	45	5.0	NORMAL	0.086
	220	0.008	1.4	0.10	75	10.0	NORMAL	0.024
	230	0.006	1.1	0.10	85	5.0	NORMAL	0.024
	610	0.004	0.7	0.10	80	5.0	NORMAL	0.024
	720	0.225	39.1	0.10	5	90.0	NORMAL	0.024
	740	0.005	0.8	0.00	0	0.0	WET	0.024
		0.574	**100.0**					
PE11	140	0.537	58.2	0.25	30	15.0	NORMAL	0.081
	150	0.005	0.6	0.25	30	15.0	NORMAL	0.081
	190	0.087	9.5	0.25	45	5.0	NORMAL	0.081
	200	0.022	2.3	0.10	80	5.0	NORMAL	0.023
	220	0.011	1.2	0.10	75	10.0	NORMAL	0.023
	230	0.000		0.10	85	5.0	NORMAL	0.023
	530	0.040	4.4	0.10	80	5.0	NORMAL	0.081
	610	0.011	1.2	0.10	80	5.0	NORMAL	0.023
	720	0.210	22.7	0.10	5	90.0	NORMAL	0.023
		0.924	**100.1**					
PE35	140	0.499	51.1	0.25	30	15.0	NORMAL	0.080
	180	0.039	4.0	0.25	45	5.0	NORMAL	0.080
	190	0.228	23.3	0.25	45	5.0	NORMAL	0.080
	200	0.083	8.5	0.10	80	5.0	NORMAL	0.023
	250	0.001	0.1	0.10	85	0.0	NORMAL	0.023
	520	0.065	6.7	0.29	40	40.0	NORMAL	0.023
	610	0.033	3.3	0.10	80	5.0	NORMAL	0.023
	740	0.030	3.0	0.00	0	0.0	WET	0.023
		0.977	**100.0**					
PE43	140	0.772	77.4	0.25	30	15.0	NORMAL	0.080
	180	0.011	1.1	0.25	45	5.0	NORMAL	0.080
	190	0.031	3.1	0.25	45	5.0	NORMAL	0.080
	200	0.046	4.6	0.10	80	5.0	NORMAL	0.022
	520	0.083	8.3	0.29	40	40.0	NORMAL	0.022
	550	0.000		0.10	80	10.0	NORMAL	0.022
	710	0.053	5.3	0.10	5	80.0	NORMAL	0.022
		0.997	**99.8**					
PE97	140	0.191	34.1	0.25	30	15.0	NORMAL	0.086
	150	0.098	17.5	0.25	30	15.0	NORMAL	0.086
	170	0.022	4.0	0.25	45	10.0	NORMAL	0.086
	220	0.039	6.9	0.10	75	10.0	NORMAL	0.024
	240	0.038	6.7	0.10	85	5.0	NORMAL	0.024
	610	0.011	2.0	0.10	80	5.0	NORMAL	0.024
	710	0.000		0.10	5	80.0	NORMAL	0.024
	720	0.079	14.1	0.10	5	90.0	NORMAL	0.024
	730	0.077	13.7	0.10	0	5.0	DRY	0.086
	740	0.005	1.0	0.00	0	0.0	WET	0.024

* Non default value

Sub Basin	Land Use Code	Area (sq mi)	AreaInitial Loss (IA) (%)		Percent Impervious (RTIMP)	Vegetable Cover (%)	DTHETA	Kb
Major Basin ID: GP								
PE97	810	0.000		0.10	80	5.0	NORMAL	0.086
		0.560	**100.0**					
PE99	140	0.215	72.9	0.25	30	15.0	NORMAL	0.093
	150	0.000		0.25	30	15.0	NORMAL	0.093
	190	0.010	3.2	0.25	45	5.0	NORMAL	0.093
	220	0.000	0.1	0.10	75	10.0	NORMAL	0.026
	230	0.022	7.5	0.10	85	5.0	NORMAL	0.026
	240	0.001	0.2	0.10	85	5.0	NORMAL	0.026
	530	0.001	0.3	0.10	80	5.0	NORMAL	0.093
	610	0.009	3.0	0.10	80	5.0	NORMAL	0.026
	720	0.038	12.8	0.10	5	90.0	NORMAL	0.026
		0.294	**100.0**					
PEAF	140	0.007	1.3	0.25	30	15.0	NORMAL	0.087
	150	0.284	53.4	0.25	30	15.0	NORMAL	0.087
	170	0.021	3.9	0.25	45	10.0	NORMAL	0.087
	180	0.014	2.7	0.25	45	5.0	NORMAL	0.087
	220	0.006	1.1	0.10	75	10.0	NORMAL	0.024
	230	0.164	30.8	0.10	85	5.0	NORMAL	0.024
	530	0.005	0.8	0.10	80	5.0	NORMAL	0.087
	610	0.005	1.0	0.10	80	5.0	NORMAL	0.024
	730	0.026	4.9	0.10	0	5.0	DRY	0.087
		0.531	**99.9**					
PENR	150	0.000	0.1	0.25	30	15.0	NORMAL	0.097
	610	0.051	26.0	0.10	80	5.0	NORMAL	0.027
	710	0.026	13.3	0.10	5	80.0	NORMAL	0.027
	730	0.000	0.1	0.10	0	5.0	DRY	0.097
	810	0.120	60.6	0.10	80	5.0	NORMAL	0.097
		0.197	**100.1**					
PP03	130	0.325	100.0	0.30	15	30.0	NORMAL	0.092
	730	0.000		0.10	0	5.0	DRY	0.092
		0.325	**100.0**					
PP07	130	0.165	84.6	0.30	15	30.0	NORMAL	0.098
	320	0.001	0.5	0.15	80	0.0	NORMAL	0.027
	730	0.029	15.0	0.10	0	5.0	DRY	0.098
		0.195	**100.1**					
PP67	120	0.091	94.0	0.30	5	50.0	NORMAL	0.105
	130	0.004	4.3	0.30	15	30.0	NORMAL	0.105
	730	0.002	1.8	0.10	0	5.0	DRY	0.105
		0.096	**100.1**					
PP73	120	0.000		0.30	5	50.0	NORMAL	0.086
	130	0.423	77.7	0.30	15	30.0	NORMAL	0.086
	140	0.121	22.2	0.25	30	15.0	NORMAL	0.086
	520	0.001	0.1	0.29	40	40.0	NORMAL	0.024
		0.545	**100.0**					
PP75	130	0.143	34.1	0.30	15	30.0	NORMAL	0.089
	140	0.092	22.0	0.25	30	15.0	NORMAL	0.089
	200	0.000		0.10	80	5.0	NORMAL	0.025
	230	0.002	0.4	0.10	85	5.0	NORMAL	0.025
	520	0.127	30.3	0.29	40	40.0	NORMAL	0.025
	530	0.027	6.3	0.10	80	5.0	NORMAL	0.089
	710	0.003	0.8	0.10	5	80.0	NORMAL	0.025
	730	0.026	6.1	0.10	0	5.0	DRY	0.089

* Non default value

Sub Basin	Land Use Code	Area (sq mi)	AreaInitial Loss (IA) (%)		Percent Impervious (RTIMP)	Vegetable Cover (%)	DTHETA	Kb
Major Basin ID: GP								
		0.420	**100.0**					
PP77	120	0.031	11.3	0.30	5	50.0	NORMAL	0.094
	130	0.239	88.4	0.30	15	30.0	NORMAL	0.094
	140	0.000		0.25	30	15.0	NORMAL	0.094
	730	0.001	0.2	0.10	0	5.0	DRY	0.094
		0.270	**99.9**					
PP81	130	0.197	100.0	0.30	15	30.0	NORMAL	0.097
		0.197	**100.0**					
PP87	130	0.977	99.6	0.30	15	30.0	NORMAL	0.080
	555	0.000		0.10	5	0.0	DRY	0.023
	730	0.004	0.4	0.10	0	5.0	DRY	0.080
		0.982	**100.0**					
PP91	130	0.161	100.0	0.30	15	30.0	NORMAL	0.100
		0.161	**100.0**					
PPAF	130	0.000		0.30	15	30.0	NORMAL	0.094
	320	0.269	99.7	0.15	80	0.0	NORMAL	0.026
	730	0.001	0.2	0.10	0	5.0	DRY	0.094
		0.270	**99.9**					
PPLP	130	0.589	66.5	0.30	15	30.0	NORMAL	0.081
	140	0.000		0.25	30	15.0	NORMAL	0.081
	200	0.008	0.9	0.10	80	5.0	NORMAL	0.023
	240	0.032	3.6	0.10	85	5.0	NORMAL	0.023
	550	0.256	28.9	0.10	80	10.0	NORMAL	0.023
	730	0.000		0.10	0	5.0	DRY	0.081
		0.885	**99.9**					
PPNR	120	0.007	2.9	0.30	5	50.0	NORMAL	0.095
	130	0.092	38.8	0.30	15	30.0	NORMAL	0.095
	140	0.000		0.25	30	15.0	NORMAL	0.095
	730	0.138	58.3	0.10	0	5.0	DRY	0.095
		0.237	**100.0**					
RG07	140	0.293	83.7	0.25	30	15.0	NORMAL	0.091
	180	0.000	0.1	0.25	45	5.0	NORMAL	0.091
	220	0.047	13.3	0.10	75	10.0	NORMAL	0.025
	240	0.000		0.10	85	5.0	NORMAL	0.025
	710	0.010	2.9	0.10	5	80.0	NORMAL	0.025
		0.350	**100.0**					
RG93	140	0.248	100.0	0.25	30	15.0	NORMAL	0.095
		0.248	**100.0**					
RGAF	140	0.128	38.4	0.25	30	15.0	NORMAL	0.092
	320	0.000		0.15	80	0.0	NORMAL	0.025
	555	0.001	0.2	0.10	5	0.0	DRY	0.025
	730	0.204	61.4	0.10	0	5.0	DRY	0.092
		0.333	**100.0**					
RGLP	140	0.323	78.8	0.25	30	15.0	NORMAL	0.090
	150	0.000		0.25	30	15.0	NORMAL	0.090
	220	0.001	0.1	0.10	75	10.0	NORMAL	0.025
	240	0.086	21.0	0.10	85	5.0	NORMAL	0.025
	520	0.000		0.29	40	40.0	NORMAL	0.025

Sub Basin	Land Use Code	Area (sq mi)	AreaInitial Loss (IA) (%)		Percent Impervious (RTIMP)	Vegetable Cover (%)	DTHETA	Kb
Major Basin ID: GP								
		0.410	**99.9**					
RO99	140	0.103	24.9	0.25	30	15.0	NORMAL	0.089
	190	0.219	53.0	0.25	45	5.0	NORMAL	0.089
	220	0.025	6.0	0.10	75	10.0	NORMAL	0.025
	230	0.001	0.1	0.10	85	5.0	NORMAL	0.025
	400	0.009	2.1	0.10	80	5.0	NORMAL	0.089
	530	0.000		0.10	80	5.0	NORMAL	0.089
	740	0.057	13.7	0.00	0	0.0	WET	0.025
		0.414	**99.8**					
SK67	120	0.030	3.2	0.30	5	50.0	NORMAL	0.080
	130	0.327	34.7	0.30	15	30.0	NORMAL	0.080
	140	0.275	29.2	0.25	30	15.0	NORMAL	0.080
	150	0.086	9.1	0.25	30	15.0	NORMAL	0.080
	190	0.000		0.25	45	5.0	NORMAL	0.080
	200	0.000		0.10	80	5.0	NORMAL	0.023
	400	0.052	5.5	0.10	80	5.0	NORMAL	0.080
	520	0.060	6.4	0.29	40	40.0	NORMAL	0.023
	530	0.058	6.1	0.10	80	5.0	NORMAL	0.080
	550	0.011	1.1	0.10	80	10.0	NORMAL	0.023
	555	0.004	0.4	0.10	5	0.0	DRY	0.023
	730	0.040	4.3	0.10	0	5.0	DRY	0.080
		0.942	**100.0**					
TB35	140	0.732	74.9	0.25	30	15.0	NORMAL	0.080
	150	0.013	1.4	0.25	30	15.0	NORMAL	0.080
	190	0.085	8.7	0.25	45	5.0	NORMAL	0.080
	200	0.057	5.8	0.10	80	5.0	NORMAL	0.023
	320	0.000		0.15	80	0.0	NORMAL	0.023
	520	0.034	3.5	0.29	40	40.0	NORMAL	0.023
	610	0.032	3.3	0.10	80	5.0	NORMAL	0.023
	710	0.023	2.3	0.10	5	80.0	NORMAL	0.023
		0.976	**99.9**					
TB43	120	0.249	25.0	0.30	5	50.0	NORMAL	0.080
	140	0.683	68.6	0.25	30	15.0	NORMAL	0.080
	180	0.028	2.8	0.25	45	5.0	NORMAL	0.080
	200	0.019	1.9	0.10	80	5.0	NORMAL	0.022
	710	0.016	1.6	0.10	5	80.0	NORMAL	0.022
		0.995	**99.9**					
TB51	120	0.494	49.9	0.30	5	50.0	NORMAL	0.080
	140	0.317	32.1	0.25	30	15.0	NORMAL	0.080
	150	0.006	0.6	0.25	30	15.0	NORMAL	0.080
	180	0.110	11.1	0.25	45	5.0	NORMAL	0.080
	200	0.023	2.3	0.10	80	5.0	NORMAL	0.022
	320	0.015	1.5	0.15	80	0.0	NORMAL	0.022
	520	0.023	2.4	0.29	40	40.0	NORMAL	0.022
	550	0.001	0.1	0.10	80	10.0	NORMAL	0.022
		0.990	**100.0**					
TB59	120	0.004	0.4	0.30	5	50.0	NORMAL	0.080
	130	0.001	0.1	0.30	15	30.0	NORMAL	0.080
	140	0.015	1.5	0.25	30	15.0	NORMAL	0.080
	150	0.482	48.4	0.25	30	15.0	NORMAL	0.080
	180	0.049	4.9	0.25	45	5.0	NORMAL	0.080
	190	0.048	4.9	0.25	45	5.0	NORMAL	0.080
	200	0.064	6.4	0.10	80	5.0	NORMAL	0.022
	400	0.029	2.9	0.10	80	5.0	NORMAL	0.080

Sub Basin	Land Use Code	Area (sq mi)	AreaInitial Loss (IA) (%)		Percent Impervious (RTIMP)	Vegetable Cover (%)	DTHETA	Kb
Major Basin ID: GP								
TB59	520	0.170	17.1	0.29	40	40.0	NORMAL	0.022
	550	0.003	0.3	0.10	80	10.0	NORMAL	0.022
	555	0.002	0.2	0.10	5	0.0	DRY	0.022
	710	0.017	1.7	0.10	5	80.0	NORMAL	0.022
	810	0.111	11.2	0.10	80	5.0	NORMAL	0.080
		0.995	**100.0**					
TB99	140	0.829	85.0	0.25	30	15.0	NORMAL	0.080
	190	0.002	0.2	0.25	45	5.0	NORMAL	0.080
	220	0.031	3.2	0.10	75	10.0	NORMAL	0.023
	400	0.025	2.5	0.10	80	5.0	NORMAL	0.080
	720	0.086	8.8	0.10	5	90.0	NORMAL	0.023
	740	0.003	0.3	0.00	0	0.0	WET	0.023
		0.976	**100.0**					
TBNR	140	0.570	50.7	0.25	30	15.0	NORMAL	0.079
	150	0.140	12.5	0.25	30	15.0	NORMAL	0.079
	180	0.000		0.25	45	5.0	NORMAL	0.079
	220	0.000		0.10	75	10.0	NORMAL	0.022
	240	0.051	4.6	0.10	85	5.0	NORMAL	0.022
	520	0.000		0.29	40	40.0	NORMAL	0.022
	555	0.000		0.10	5	0.0	DRY	0.022
	610	0.035	3.1	0.10	80	5.0	NORMAL	0.022
	710	0.075	6.6	0.10	5	80.0	NORMAL	0.022
	720	0.055	4.9	0.10	5	90.0	NORMAL	0.022
	730	0.054	4.8	0.10	0	5.0	DRY	0.079
	740	0.075	6.7	0.00	0	0.0	WET	0.022
	810	0.068	6.0	0.10	80	5.0	NORMAL	0.079
		1.124	**99.9**					
TL07	140	0.355	61.3	0.25	30	15.0	NORMAL	0.086
	190	0.043	7.3	0.25	45	5.0	NORMAL	0.086
	520	0.030	5.2	0.29	40	40.0	NORMAL	0.024
	530	0.017	2.9	0.10	80	5.0	NORMAL	0.086
	555	0.010	1.7	0.10	5	0.0	DRY	0.024
	710	0.001	0.2	0.10	5	80.0	NORMAL	0.024
	720	0.124	21.4	0.10	5	90.0	NORMAL	0.024
		0.580	**100.0**					
UH07	140	0.159	63.2	0.25	30	15.0	NORMAL	0.095
	180	0.003	1.0	0.25	45	5.0	NORMAL	0.095
	200	0.002	0.7	0.10	80	5.0	NORMAL	0.026
	220	0.001	0.3	0.10	75	10.0	NORMAL	0.026
	710	0.001	0.2	0.10	5	80.0	NORMAL	0.026
	720	0.087	34.5	0.10	5	90.0	NORMAL	0.026
		0.252	**99.9**					
UH15	140	0.445	43.7	0.25	30	15.0	NORMAL	0.080
	150	0.009	0.9	0.25	30	15.0	NORMAL	0.080
	180	0.208	20.4	0.25	45	5.0	NORMAL	0.080
	200	0.028	2.7	0.10	80	5.0	NORMAL	0.022
	220	0.015	1.5	0.10	75	10.0	NORMAL	0.022
	550	0.263	25.8	0.10	80	10.0	NORMAL	0.022
	555	0.019	1.9	0.10	5	0.0	DRY	0.022
	710	0.015	1.5	0.10	5	80.0	NORMAL	0.022
	740	0.016	1.6	0.00	0	0.0	WET	0.022
		1.019	**100.0**					
UH35	120	0.000		0.30	5	50.0	NORMAL	0.078
	150	0.416	36.6	0.25	30	15.0	NORMAL	0.078

* Non default value

Sub Basin	Land Use Code	Area (sq mi)	AreaInitial Loss (IA) (%)		Percent Impervious (RTIMP)	Vegetable Cover (%)	DTHETA	Kb
Major Basin ID: GP								
UH35	180	0.191	16.8	0.25	45	5.0	NORMAL	0.078
	190	0.116	10.2	0.25	45	5.0	NORMAL	0.078
	200	0.203	17.8	0.10	80	5.0	NORMAL	0.022
	320	0.102	9.0	0.15	80	0.0	NORMAL	0.022
	520	0.000		0.29	40	40.0	NORMAL	0.022
	555	0.014	1.2	0.10	5	0.0	DRY	0.022
	610	0.094	8.3	0.10	80	5.0	NORMAL	0.022
		1.136	**99.9**					
UH43	120	0.602	58.7	0.30	5	50.0	NORMAL	0.080
	150	0.181	17.6	0.25	30	15.0	NORMAL	0.080
	170	0.001		0.25	45	10.0	NORMAL	0.080
	180	0.063	6.2	0.25	45	5.0	NORMAL	0.080
	200	0.017	1.6	0.10	80	5.0	NORMAL	0.022
	520	0.023	2.3	0.29	40	40.0	NORMAL	0.022
	610	0.026	2.5	0.10	80	5.0	NORMAL	0.022
	730	0.113	11.1	0.10	0	5.0	DRY	0.080
		1.025	**100.0**					
UH51	120	0.000		0.30	5	50.0	NORMAL	0.080
	150	0.435	44.0	0.25	30	15.0	NORMAL	0.080
	170	0.372	37.6	0.25	45	10.0	NORMAL	0.080
	180	0.030	3.0	0.25	45	5.0	NORMAL	0.080
	200	0.016	1.6	0.10	80	5.0	NORMAL	0.022
	220	0.006	0.6	0.10	75	10.0	NORMAL	0.022
	520	0.026	2.6	0.29	40	40.0	NORMAL	0.022
	610	0.030	3.0	0.10	80	5.0	NORMAL	0.022
	730	0.076	7.6	0.10	0	5.0	DRY	0.080
		0.990	**100.0**					
UH67	150	0.374	47.7	0.25	30	15.0	NORMAL	0.082
	190	0.078	10.0	0.25	45	5.0	NORMAL	0.082
	200	0.092	11.7	0.10	80	5.0	NORMAL	0.023
	520	0.159	20.3	0.29	40	40.0	NORMAL	0.023
	530	0.008	1.0	0.10	80	5.0	NORMAL	0.082
	550	0.008	1.0	0.10	80	10.0	NORMAL	0.023
	610	0.055	7.0	0.10	80	5.0	NORMAL	0.023
	710	0.011	1.4	0.10	5	80.0	NORMAL	0.023
		0.784	**100.1**					
UH75	150	0.552	67.8	0.25	30	15.0	NORMAL	0.082
	180	0.001	0.2	0.25	45	5.0	NORMAL	0.082
	190	0.016	2.0	0.25	45	5.0	NORMAL	0.082
	200	0.020	2.5	0.10	80	5.0	NORMAL	0.023
	400	0.000		0.10	80	5.0	NORMAL	0.082
	520	0.047	5.7	0.29	40	40.0	NORMAL	0.023
	530	0.000		0.10	80	5.0	NORMAL	0.082
	610	0.027	3.3	0.10	80	5.0	NORMAL	0.023
	710	0.006	0.7	0.10	5	80.0	NORMAL	0.023
	720	0.145	17.8	0.10	5	90.0	NORMAL	0.023
		0.814	**100.0**					
UH87	140	0.725	72.7	0.25	30	15.0	NORMAL	0.080
	200	0.040	4.0	0.10	80	5.0	NORMAL	0.022
	720	0.233	23.3	0.10	5	90.0	NORMAL	0.022
	810	0.000		0.10	80	5.0	NORMAL	0.080
		0.998	**100.0**					
UH91	140	0.486	52.4	0.25	30	15.0	NORMAL	0.081
	180	0.202	21.8	0.25	45	5.0	NORMAL	0.081

* Non default value

Sub Basin	Land Use Code	Area (sq mi)	Area	Initial Loss (IA) (%)	Percent Impervious (RTIMP)	Vegetable Cover (%)	DTHETA	Kb
Major Basin ID: GP								
UH91	200	0.007	0.7	0.10	80	5.0	NORMAL	0.023
	720	0.234	25.2	0.10	5	90.0	NORMAL	0.023
		0.929	**100.1**					
UH97	140	0.115	42.3	0.25	30	15.0	NORMAL	0.094
	180	0.080	29.5	0.25	45	5.0	NORMAL	0.094
	190	0.005	1.8	0.25	45	5.0	NORMAL	0.094
	520	0.002	0.6	0.29	40	40.0	NORMAL	0.026
	720	0.070	25.8	0.10	5	90.0	NORMAL	0.026
		0.272	**100.0**					
UH99	140	0.425	75.5	0.25	30	15.0	NORMAL	0.086
	180	0.001	0.2	0.25	45	5.0	NORMAL	0.086
	190	0.119	21.2	0.25	45	5.0	NORMAL	0.086
	220	0.000		0.10	75	10.0	NORMAL	0.024
	520	0.001	0.2	0.29	40	40.0	NORMAL	0.024
	530	0.016	2.8	0.10	80	5.0	NORMAL	0.086
	720	0.001	0.2	0.10	5	90.0	NORMAL	0.024
		0.563	**100.1**					
UHAF	150	0.172	35.2	0.25	30	15.0	NORMAL	0.088
	720	0.099	20.3	0.10	5	90.0	NORMAL	0.024
	730	0.218	44.5	0.10	0	5.0	DRY	0.088
		0.489	**100.0**					
UHLO	150	0.543	66.0	0.25	30	15.0	NORMAL	0.082
	180	0.058	7.0	0.25	45	5.0	NORMAL	0.082
	190	0.000		0.25	45	5.0	NORMAL	0.082
	400	0.000		0.10	80	5.0	NORMAL	0.082
	520	0.000		0.29	40	40.0	NORMAL	0.023
	530	0.029	3.6	0.10	80	5.0	NORMAL	0.082
	610	0.046	5.6	0.10	80	5.0	NORMAL	0.023
	710	0.055	6.7	0.10	5	80.0	NORMAL	0.023
	720	0.091	11.0	0.10	5	90.0	NORMAL	0.023
		0.822	**99.9**					
UHNR	120	0.011	2.9	0.30	5	50.0	NORMAL	0.090
	130	0.005	1.2	0.30	15	30.0	NORMAL	0.090
	140	0.041	10.7	0.25	30	15.0	NORMAL	0.090
	190	0.087	22.6	0.25	45	5.0	NORMAL	0.090
	200	0.019	4.9	0.10	80	5.0	NORMAL	0.025
	550	0.031	8.1	0.10	80	10.0	NORMAL	0.025
	610	0.051	13.2	0.10	80	5.0	NORMAL	0.025
	730	0.103	26.8	0.10	0	5.0	DRY	0.090
	810	0.037	9.6	0.10	80	5.0	NORMAL	0.090
		0.386	**100.0**					
UHSK	130	0.172	18.4	0.30	15	30.0	NORMAL	0.081
	140	0.000		0.25	30	15.0	NORMAL	0.081
	150	0.330	35.3	0.25	30	15.0	NORMAL	0.081
	170	0.002	0.2	0.25	45	10.0	NORMAL	0.081
	190	0.008	0.9	0.25	45	5.0	NORMAL	0.081
	200	0.012	1.3	0.10	80	5.0	NORMAL	0.023
	220	0.001	0.1	0.10	75	10.0	NORMAL	0.023
	400	0.012	1.2	0.10	80	5.0	NORMAL	0.081
	520	0.133	14.2	0.29	40	40.0	NORMAL	0.023
	550	0.009	1.0	0.10	80	10.0	NORMAL	0.023
	555	0.003	0.3	0.10	5	0.0	DRY	0.023
	610	0.020	2.2	0.10	80	5.0	NORMAL	0.023
	710	0.009	1.0	0.10	5	80.0	NORMAL	0.023

Sub Basin	Land Use Code	Area (sq mi)	Area	Initial Loss (IA) (%)	Percent Impervious (RTIMP)	Vegetable Cover (%)	DTHETA	Kb
Major Basin ID: GP								
UHSK	730	0.148	15.9	0.10	0	5.0	DRY	0.081
	810	0.076	8.1	0.10	80	5.0	NORMAL	0.081
		0.934	**100.1**					
WL59	120	0.180	32.0	0.30	5	50.0	NORMAL	0.086
	130	0.002	0.3	0.30	15	30.0	NORMAL	0.086
	140	0.002	0.4	0.25	30	15.0	NORMAL	0.086
	730	0.379	67.3	0.10	0	5.0	DRY	0.086
		0.562	**100.0**					
WL67	120	0.071	68.9	0.30	5	50.0	NORMAL	0.105
	730	0.032	31.1	0.10	0	5.0	DRY	0.105
		0.103	**100.0**					
WL75	120	0.000		0.30	5	50.0	NORMAL	0.088
	130	0.235	49.5	0.30	15	30.0	NORMAL	0.088
	140	0.030	6.4	0.25	30	15.0	NORMAL	0.088
	150	0.087	18.4	0.25	30	15.0	NORMAL	0.088
	320	0.000		0.15	80	0.0	NORMAL	0.024
	520	0.122	25.7	0.29	40	40.0	NORMAL	0.024
	730	0.000		0.10	0	5.0	DRY	0.088
		0.475	**100.0**					
WL83	130	0.124	99.7	0.30	15	30.0	NORMAL	0.102
	140	0.000	0.3	0.25	30	15.0	NORMAL	0.102
		0.125	**100.0**					
WLNR	130	0.245	62.9	0.30	15	30.0	NORMAL	0.090
	140	0.000	0.1	0.25	30	15.0	NORMAL	0.090
	150	0.000		0.25	30	15.0	NORMAL	0.090
	320	0.112	28.8	0.15	80	0.0	NORMAL	0.025
	730	0.032	8.3	0.10	0	5.0	DRY	0.090
		0.390	**100.1**					
WWBR	130	0.005	2.6	0.30	15	30.0	NORMAL	0.098
	140	0.143	78.0	0.25	30	15.0	NORMAL	0.098
	150	0.002	1.2	0.25	30	15.0	NORMAL	0.098
	730	0.034	18.2	0.10	0	5.0	DRY	0.098
		0.184	**100.0**					
WWLP	130	0.001	0.4	0.30	15	30.0	NORMAL	0.102
	140	0.079	58.4	0.25	30	15.0	NORMAL	0.102
	150	0.011	8.3	0.25	30	15.0	NORMAL	0.102
	200	0.034	25.3	0.10	80	5.0	NORMAL	0.028
	730	0.010	7.6	0.10	0	5.0	DRY	0.102
		0.136	**100.0**					
WWRS	140	0.064	44.5	0.25	30	15.0	NORMAL	0.101
	520	0.025	17.3	0.29	40	40.0	NORMAL	0.028
	710	0.038	26.5	0.10	5	80.0	NORMAL	0.028
	730	0.017	11.7	0.10	0	5.0	DRY	0.101
		0.144	**100.0**					
YLLP	130	0.405	68.1	0.30	15	30.0	NORMAL	0.085
	140	0.070	11.7	0.25	30	15.0	NORMAL	0.085
	240	0.055	9.2	0.10	85	5.0	NORMAL	0.024
	400	0.001	0.2	0.10	80	5.0	NORMAL	0.085
	730	0.064	10.8	0.10	0	5.0	DRY	0.085
		0.595	**100.0**					

Soils

Major Basin ID: GP

Area ID	Book Number	Map Unit	Soil ID	Area (sq mi)	Area (%)	XKSAT	Rock Percent (%)	Effective Rock (%)
83RS	645	18	64518	0.011	1.70	0.33	15.00	100
	645	118	645118	0.017	2.60	0.42	-	100
	651	AL	6512042	0.069	10.70	0.40	-	100
	651	CO	6512448	0.060	9.40	0.29	20.00	100
	651	RS	6515456	0.197	30.90	0.40	65.00	100
	651	GWD	651326426	0.101	15.80	0.35	-	100
	651	PWB	651506422	0.040	6.20	0.38	-	100
	651	TSC	651585624	0.144	22.60	0.14	-	100
AC35	651	Aa	6512021	0.012	1.50	0.26	-	100
	651	Ao	6512049	0.084	11.20	0.04	-	100
	651	Vh	6516235	0.000	0.00	0.27	-	100
	651	GgA	651323320	0.659	87.30	0.25	-	100
AC43	651	Ao	6512049	0.004	1.20	0.04	-	100
	651	Bs	6512257	0.033	9.20	0.39	-	100
	651	Ge	6513229	0.006	1.70	0.26	-	100
	651	Ma	6514421	0.008	2.10	0.40	-	100
	651	Vg	6516233	0.066	18.20	0.91	-	100
	651	Vh	6516235	0.057	15.80	0.27	-	100
	651	GgA	651323320	0.188	51.80	0.25	-	100
AC51	651	Ao	6512049	0.011	1.90	0.04	-	100
	651	Le	6514229	0.100	17.30	0.04	-	100
	651	Mp	6514451	0.008	1.50	0.25	-	100
	651	Mr	6514455	0.251	43.50	0.05	-	100
	651	Ta	6515821	0.010	1.70	0.25	-	100
	651	Tt	6515859	0.023	4.00	0.04	-	100
	651	Tw	6515865	0.018	3.10	0.05	-	100
	651	Vf	6516231	0.014	2.50	0.01	-	100
	651	GgA	651323320	0.010	1.70	0.25	-	100
	651	LcA	651422520	0.132	22.90	0.25	-	100
AC59	651	Le	6514229	0.080	10.80	0.04	-	100
	651	Mp	6514451	0.010	1.30	0.25	-	100
	651	Mr	6514455	0.358	48.30	0.05	-	100
	651	Ms	6514457	0.005	0.70	0.01	-	100
	651	Te	6515829	0.000	0.10	0.25	-	100
	651	Tg	6515833	0.052	7.00	0.04	-	100
	651	Tw	6515865	0.010	1.30	0.05	-	100
	651	Vf	6516231	0.049	6.60	0.01	-	100
	651	GxA	651326720	0.004	0.50	0.23	-	100
	651	LcA	651422520	0.174	23.40	0.25	-	100
AC67	651	Ao	6512049	0.040	5.70	0.04	-	100
	651	Le	6514229	0.033	4.80	0.04	-	100
	651	Mp	6514451	0.007	0.90	0.25	-	100
	651	Mr	6514455	0.213	30.50	0.05	-	100
	651	Tu	6515861	0.005	0.80	0.25	-	100
	651	Tw	6515865	0.205	29.40	0.05	-	100
	651	Vf	6516231	0.060	8.60	0.01	-	100
	651	GxA	651326720	0.003	0.40	0.23	-	100
	651	LcA	651422520	0.132	19.00	0.25	-	100
AC75	651	Le	6514229	0.004	0.50	0.04	-	100
	651	Mp	6514451	0.134	15.90	0.25	-	100
	651	Mr	6514455	0.156	18.50	0.05	-	100
	651	TD	6515826	0.004	0.50	1.20	-	100
	651	Tw	6515865	0.003	0.40	0.05	-	100
	651	Vf	6516231	0.046	5.50	0.01	-	100
	651	AbA	651202320	0.010	1.20	0.38	-	100
	651	GgA	651323320	0.026	3.10	0.25	-	100
	651	GPI	651325036	0.019	2.20	0.00	-	100
	651	LcA	651422520	0.423	50.20	0.25	-	100
	651	RbA	651542320	0.012	1.40	0.26	-	100
	651	TfA	651583120	0.005	0.50	0.37	-	100
AF11	651	W	65164	0.009	2.50	0.00	-	100

* Non default value

Major Basin ID: GP

Area ID	Book Number	Map Unit	Soil ID	Area (sq mi)	Area (%)	XKSAT	Rock Percent (%)	Effective Rock (%)
AF11	651	Br	6512255	0.154	41.20	1.05	-	100
	651	Cb	6512423	0.143	38.10	0.40	-	100
	651	TD	6515826	0.068	18.20	1.20	-	100
BL15	651	Ge	6513229	0.001	0.10	0.26	-	100
	651	Ma	6514421	0.000	0.00	0.40	-	100
	651	Mo	6514449	0.004	0.40	0.39	-	100
	651	Mp	6514451	0.007	0.70	0.25	-	100
	651	Mr	6514455	0.009	1.00	0.05	-	100
	651	Te	6515829	0.033	3.50	0.25	-	100
	651	Va	6516221	0.020	2.10	0.39	-	100
	651	Vh	6516235	0.006	0.60	0.27	-	100
	651	CA2	65124202	0.222	23.00	0.38	-	100
	651	AbA	651202320	0.112	11.70	0.38	-	100
	651	GgA	651323320	0.024	2.50	0.25	-	100
	651	GxA	651326720	0.153	15.90	0.23	-	100
	651	LcA	651422520	0.208	21.60	0.25	-	100
	651	LcB	651422522	0.008	0.80	0.25	-	100
	651	PeA	651502920	0.039	4.00	0.37	-	100
	651	RbA	651542320	0.013	1.40	0.26	-	100
	651	RpE	651545128	0.000	0.00	0.29	-	100
	651	TfA	651583120	0.002	0.20	0.37	-	100
	651	TfB	651583122	0.033	3.40	0.36	-	100
	651	TrB	651585522	0.067	7.00	0.13	-	100
BL35	651	Bs	6512257	0.021	1.80	0.39	-	100
	651	Cp	6512451	0.003	0.30	0.40	-	100
	651	Es	6512857	0.058	5.10	0.25	-	100
	651	Lb	6514223	0.004	0.40	0.40	-	100
	651	Mp	6514451	0.305	26.80	0.25	-	100
	651	Mr	6514455	0.212	18.60	0.05	-	100
	651	Tc	6515825	0.010	0.90	0.40	-	100
	651	Th	6515835	0.020	1.80	0.04	-	100
	651	Tu	6515861	0.004	0.30	0.25	-	100
	651	Tw	6515865	0.011	1.00	0.05	-	100
	651	Ve	6516229	0.094	8.20	0.25	-	100
	651	Vf	6516231	0.246	21.60	0.01	-	100
	651	LcA	651422520	0.146	12.80	0.25	-	100
	651	PeA	651502920	0.006	0.50	0.37	-	100
	651	RbA	651542320	0.000	0.00	0.26	-	100
BL43	651	Es	6512857	0.015	1.50	0.25	-	100
	651	Le	6514229	0.000	0.00	0.04	-	100
	651	Mp	6514451	0.074	7.10	0.25	-	100
	651	Mr	6514455	0.499	47.60	0.05	-	100
	651	Te	6515829	0.021	2.00	0.25	-	100
	651	Tg	6515833	0.009	0.90	0.04	-	100
	651	Th	6515835	0.017	1.60	0.04	-	100
	651	Tw	6515865	0.046	4.40	0.05	-	100
	651	Vf	6516231	0.131	12.50	0.01	-	100
	651	GgA	651323320	0.005	0.50	0.25	-	100
	651	GxA	651326720	0.005	0.40	0.23	-	100
	651	LcA	651422520	0.200	19.10	0.25	-	100
	651	RaA	651542120	0.006	0.50	0.39	-	100
	651	RbA	651542320	0.020	1.90	0.26	-	100
BL51	651	W	65164	0.005	0.40	0.00	-	100
	651	Cp	6512451	0.024	2.30	0.40	-	100
	651	Lb	6514223	0.010	0.90	0.40	-	100
	651	Le	6514229	0.047	4.50	0.04	-	100
	651	Mp	6514451	0.165	15.80	0.25	-	100
	651	Mr	6514455	0.327	31.30	0.05	-	100
	651	Ms	6514457	0.004	0.40	0.01	-	100
	651	Tg	6515833	0.004	0.40	0.04	-	100
	651	Th	6515835	0.003	0.30	0.04	-	100
	651	Tu	6515861	0.001	0.10	0.25	-	100

* Non default value

Major Basin ID: GP

Area ID	Book Number	Map Unit	Soil ID	Area (sq mi)	Area (%)	XKSAT	Rock Percent (%)	Effective Rock (%)
BL51	651	Tw	6515865	0.078	7.50	0.05	-	100
	651	Vf	6516231	0.025	2.40	0.01	-	100
	651	CrB	651245522	0.007	0.70	0.40	-	100
	651	GgA	651323320	0.038	3.60	0.25	-	100
	651	GxA	651326720	0.003	0.30	0.23	-	100
	651	GxB	651326722	0.005	0.50	0.24	-	100
	651	LcA	651422520	0.290	27.80	0.25	-	100
	651	PeA	651502920	0.005	0.50	0.37	-	100
	651	PeB	651502922	0.002	0.20	0.38	-	100
	651	RbA	651542320	0.002	0.20	0.26	-	100
BL59	651	Aa	6512021	0.000	0.00	0.26	-	100
	651	Lb	6514223	0.014	1.30	0.40	-	100
	651	Le	6514229	0.081	7.50	0.04	-	100
	651	Mp	6514451	0.027	2.50	0.25	-	100
	651	Mr	6514455	0.138	12.80	0.05	-	100
	651	Tg	6515833	0.026	2.40	0.04	-	100
	651	Tw	6515865	0.182	16.90	0.05	-	100
	651	Vf	6516231	0.067	6.20	0.01	-	100
	651	AdB	651202722	0.000	0.00	0.40	-	100
	651	GgA	651323320	0.000	0.00	0.25	-	100
	651	LcA	651422520	0.520	48.40	0.25	-	100
	651	RbA	651542320	0.020	1.90	0.26	-	100
BL67	651	Mp	6514451	0.039	16.90	0.25	-	100
	651	Mr	6514455	0.033	13.90	0.05	-	100
	651	Tc	6515825	0.003	1.40	0.40	-	100
	651	Te	6515829	0.004	1.50	0.25	-	100
	651	Tg	6515833	0.004	1.70	0.04	-	100
	651	Tw	6515865	0.042	18.00	0.05	-	100
	651	Vf	6516231	0.006	2.60	0.01	-	100
	651	LcA	651422520	0.102	43.90	0.25	-	100
	651	PeB	651502922	0.000	0.10	0.38	-	100
BL75	651	W	65164	0.001	0.10	0.00	-	100
	651	Aa	6512021	0.035	3.30	0.26	-	100
	651	Cb	6512423	0.023	2.10	0.40	-	100
	651	Cp	6512451	0.015	1.40	0.40	-	100
	651	Es	6512857	0.010	1.00	0.25	-	100
	651	Mp	6514451	0.006	0.60	0.25	-	100
	651	Mr	6514455	0.137	12.80	0.05	-	100
	651	TD	6515826	0.048	4.50	1.20	-	100
	651	Te	6515829	0.001	0.10	0.25	-	100
	651	Tg	6515833	0.000	0.00	0.04	-	100
	651	Th	6515835	0.038	3.50	0.04	-	100
	651	Tu	6515861	0.014	1.30	0.25	-	100
	651	Tw	6515865	0.014	1.30	0.05	-	100
	651	Vk	6516241	0.002	0.20	0.26	-	100
	651	AbA	651202320	0.000	0.00	0.38	-	100
	651	GgA	651323320	0.182	17.10	0.25	-	100
	651	GxA	651326720	0.007	0.70	0.23	-	100
	651	LcA	651422520	0.323	30.30	0.25	-	100
	651	PeA	651502920	0.093	8.70	0.37	-	100
	651	PeB	651502922	0.000	0.00	0.38	-	100
	651	RbA	651542320	0.116	10.90	0.26	-	100
BL91	651	Bs	6512257	0.000	0.00	0.39	-	100
	651	Es	6512857	0.034	3.70	0.25	-	100
	651	Mp	6514451	0.026	2.90	0.25	-	100
	651	Mr	6514455	0.494	54.80	0.05	-	100
	651	Ms	6514457	0.009	0.90	0.01	-	100
	651	PT	6515058	0.029	3.20	0.40	-	100
	651	TD	6515826	0.001	0.10	1.20	-	100
	651	Tg	6515833	0.000	0.00	0.04	-	100
	651	Th	6515835	0.005	0.50	0.04	-	100
	651	Tw	6515865	0.001	0.10	0.05	-	100

* Non default value

Major Basin ID: GP

Area ID	Book Number	Map Unit	Soil ID	Area (sq mi)	Area (%)	XKSAT	Rock Percent (%)	Effective Rock (%)
BL91	651	Ve	6516229	0.021	2.30	0.25	-	100
	651	GgA	651323320	0.010	1.10	0.25	-	100
	651	GxA	651326720	0.122	13.50	0.23	-	100
	651	LcA	651422520	0.106	11.70	0.25	-	100
	651	PeA	651502920	0.004	0.40	0.37	-	100
	651	RbA	651542320	0.041	4.60	0.26	-	100
BL99	651	Le	6514229	0.017	1.50	0.04	-	100
	651	Mp	6514451	0.016	1.40	0.25	-	100
	651	Mr	6514455	0.093	8.20	0.05	-	100
	651	PT	6515058	0.034	3.00	0.40	-	100
	651	Tg	6515833	0.052	4.60	0.04	-	100
	651	Th	6515835	0.015	1.30	0.04	-	100
	651	Tw	6515865	0.002	0.20	0.05	-	100
	651	Vf	6516231	0.152	13.40	0.01	-	100
	651	GxA	651326720	0.037	3.30	0.23	-	100
	651	LcA	651422520	0.529	46.70	0.25	-	100
	651	PeA	651502920	0.130	11.50	0.37	-	100
	651	RbA	651542320	0.057	5.00	0.26	-	100
BLAF	651	Cb	6512423	0.063	22.10	0.40	-	100
	651	Ge	6513229	0.001	0.50	0.26	-	100
	651	Ma	6514421	0.043	15.00	0.40	-	100
	651	TD	6515826	0.027	9.60	1.20	-	100
	651	Vg	6516233	0.087	30.70	0.91	-	100
	651	Vh	6516235	0.050	17.70	0.27	-	100
	651	AbA	651202320	0.002	0.70	0.38	-	100
	651	GgA	651323320	0.010	3.70	0.25	-	100
BLLO	651	Cb	6512423	0.000	0.10	0.40	-	100
	651	Ma	6514421	0.017	2.20	0.40	-	100
	651	Mr	6514455	0.009	1.20	0.05	-	100
	651	Tg	6515833	0.004	0.50	0.04	-	100
	651	Th	6515835	0.017	2.20	0.04	-	100
	651	AfA	651203120	0.581	76.00	0.38	-	100
	651	GgA	651323320	0.023	3.00	0.25	-	100
	651	LcA	651422520	0.059	7.70	0.25	-	100
	651	RbA	651542320	0.055	7.20	0.26	-	100
BLNR	651	Aa	6512021	0.009	1.50	0.26	-	100
	651	Cb	6512423	0.133	22.10	0.40	-	100
	651	Es	6512857	0.007	1.10	0.25	-	100
	651	Ma	6514421	0.047	7.80	0.40	-	100
	651	Mo	6514449	0.003	0.50	0.39	-	100
	651	Mp	6514451	0.034	5.70	0.25	-	100
	651	Mr	6514455	0.174	28.80	0.05	-	100
	651	TD	6515826	0.044	7.30	1.20	-	100
	651	Tg	6515833	0.019	3.10	0.04	-	100
	651	Va	6516221	0.001	0.20	0.39	-	100
	651	Vf	6516231	0.008	1.30	0.01	-	100
	651	AbA	651202320	0.001	0.10	0.38	-	100
	651	AfA	651203120	0.088	14.60	0.38	-	100
	651	GgA	651323320	0.000	0.00	0.25	-	100
	651	GPI	651325036	0.036	5.90	0.00	-	100
BN99	651	Mp	6514451	0.008	0.70	0.25	-	100
	651	Mr	6514455	0.130	12.60	0.05	-	100
	651	Tg	6515833	0.011	1.10	0.04	-	100
	651	Th	6515835	0.071	6.90	0.04	-	100
	651	Tw	6515865	0.025	2.40	0.05	-	100
	651	Vf	6516231	0.044	4.20	0.01	-	100
	651	GxA	651326720	0.008	0.80	0.23	-	100
	651	LcA	651422520	0.711	68.50	0.25	-	100
	651	PeA	651502920	0.022	2.10	0.37	-	100
	651	RbA	651542320	0.008	0.80	0.26	-	100
BY07	651	BE	6512228	0.111	21.70	0.24	-	100
	651	Mp	6514451	0.037	7.20	0.25	-	100

* Non default value

Major Basin ID: GP

Area ID	Book Number	Map Unit	Soil ID	Area (sq mi)	Area (%)	XKSAT	Rock Percent (%)	Effective Rock (%)
BY07	651	Mr	6514455	0.035	6.80	0.05	-	100
	651	PT	6515058	0.005	1.00	0.40	-	100
	651	Te	6515829	0.010	1.90	0.25	-	100
	651	LcA	651422520	0.023	4.50	0.25	-	100
	651	MTB	651445822	0.024	4.60	0.15	-	100
	651	PRB	651505422	0.162	31.60	0.28	-	100
	651	PWB	651506422	0.047	9.10	0.38	-	100
	651	RbA	651542320	0.000	0.00	0.26	-	100
	651	TPB	651585022	0.008	1.50	0.12	-	100
	651	TrA	651585520	0.016	3.10	0.11	-	100
	651	TrB	651585522	0.001	0.10	0.13	-	100
	651	TSC	651585624	0.036	6.90	0.14	-	100
BY87	651	Mp	6514451	0.019	2.00	0.25	-	100
	651	Mr	6514455	0.407	42.40	0.05	-	100
	651	PT	6515058	0.004	0.40	0.40	-	100
	651	Te	6515829	0.018	1.90	0.25	-	100
	651	Tg	6515833	0.029	3.00	0.04	-	100
	651	Th	6515835	0.013	1.40	0.04	-	100
	651	Tu	6515861	0.012	1.20	0.25	-	100
	651	Tw	6515865	0.037	3.90	0.05	-	100
	651	Vf	6516231	0.120	12.50	0.01	-	100
	651	GxA	651326720	0.003	0.30	0.23	-	100
	651	LcA	651422520	0.298	31.10	0.25	-	100
BY91	651	Mp	6514451	0.029	5.80	0.25	-	100
	651	PT	6515058	0.176	35.20	0.40	-	100
	651	Te	6515829	0.007	1.40	0.25	-	100
	651	Ve	6516229	0.011	2.20	0.25	-	100
	651	GxA	651326720	0.000	0.00	0.23	-	100
	651	LcA	651422520	0.259	51.60	0.25	-	100
	651	PsA	651505720	0.019	3.70	0.25	-	100
BYAF	651	Br	6512255	0.053	8.70	1.05	-	100
	651	Cb	6512423	0.073	12.00	0.40	-	100
	651	Ma	6514421	0.006	1.00	0.40	-	100
	651	Mr	6514455	0.023	3.80	0.05	-	100
	651	TD	6515826	0.021	3.50	1.20	-	100
	651	Te	6515829	0.039	6.40	0.25	-	100
	651	Tg	6515833	0.008	1.30	0.04	-	100
	651	Va	6516221	0.017	2.70	0.39	-	100
	651	CA2	65124202	0.022	3.60	0.38	-	100
	651	AbA	651202320	0.067	11.00	0.38	-	100
	651	GgA	651323320	0.007	1.10	0.25	-	100
	651	PRB	651505422	0.017	2.80	0.28	-	100
	651	RbA	651542320	0.004	0.70	0.26	-	100
	651	RpE	651545128	0.004	0.60	0.29	-	100
	651	TfA	651583120	0.055	9.10	0.37	-	100
	651	TPB	651585022	0.193	31.80	0.12	-	100
BYNR	651	Aa	6512021	0.015	1.50	0.26	-	100
	651	Bs	6512257	0.012	1.10	0.39	-	100
	651	Bt	6512259	0.000	0.00	0.25	-	100
	651	Cb	6512423	0.118	11.40	0.40	-	100
	651	Es	6512857	0.003	0.30	0.25	-	100
	651	Ge	6513229	0.099	9.50	0.26	-	100
	651	Le	6514229	0.000	0.00	0.04	-	100
	651	Ma	6514421	0.009	0.80	0.40	-	100
	651	Mo	6514449	0.005	0.50	0.39	-	100
	651	Mp	6514451	0.019	1.80	0.25	-	100
	651	Mr	6514455	0.340	32.90	0.05	-	100
	651	TD	6515826	0.090	8.70	1.20	-	100
	651	Te	6515829	0.005	0.40	0.25	-	100
	651	Tg	6515833	0.017	1.60	0.04	-	100
	651	Th	6515835	0.016	1.50	0.04	-	100
	651	Tw	6515865	0.014	1.40	0.05	-	100

Major Basin ID: GP

Area ID	Book Number	Map Unit	Soil ID	Area (sq mi)	Area (%)	XKSAT	Rock Percent (%)	Effective Rock (%)
BYNR	651	Ve	6516229	0.004	0.40	0.25	-	100
	651	Vf	6516231	0.032	3.10	0.01	-	100
	651	Vh	6516235	0.028	2.70	0.27	-	100
	651	AbA	651202320	0.012	1.10	0.38	-	100
	651	AfA	651203120	0.161	15.50	0.38	-	100
	651	GgA	651323320	0.018	1.70	0.25	-	100
	651	LcA	651422520	0.019	1.80	0.25	-	100
CL07	651	BE	6512228	0.083	15.90	0.24	-	100
	651	CF	6512430	0.011	2.20	0.50	-	100
	651	GM	6513244	0.032	6.20	0.29	-	100
	651	PT	6515058	0.053	10.00	0.40	-	100
	651	GWD	651326426	0.064	12.20	0.35	-	100
	651	GYD	651326826	0.024	4.60	0.26	-	100
	651	PWB	651506422	0.176	33.50	0.38	-	100
	651	TPB	651585022	0.081	15.40	0.12	-	100
CL57	651	CO	6512448	0.165	22.10	0.29	20.00	100
	651	PT	6515058	0.016	2.10	0.40	-	100
	651	RS	6515456	0.067	9.00	0.40	65.00	100
	651	AfA	651203120	0.033	4.40	0.38	-	100
	651	LcA	651422520	0.291	38.90	0.25	-	100
	651	LcB	651422522	0.041	5.50	0.25	-	100
	651	PeA	651502920	0.075	10.00	0.37	-	100
	651	RbA	651542320	0.059	7.90	0.26	-	100
CL67	651	CO	6512448	0.061	22.10	0.29	20.00	100
	651	PT	6515058	0.078	28.40	0.40	-	100
	651	AfA	651203120	0.016	5.70	0.38	-	100
	651	GxB	651326722	0.035	12.60	0.24	-	100
	651	LcA	651422520	0.030	11.00	0.25	-	100
	651	PeA	651502920	0.042	15.20	0.37	-	100
	651	PRB	651505422	0.001	0.50	0.28	-	100
	651	RbA	651542320	0.013	4.60	0.26	-	100
CL77	651	GM	6513244	0.065	20.60	0.29	-	100
	651	GN	6513246	0.100	31.60	0.25	-	100
	651	AGB	651203222	0.094	29.80	0.40	-	100
	651	GWD	651326426	0.057	18.00	0.35	-	100
CLAF	651	CF	6512430	0.180	62.20	0.50	-	100
	651	GM	6513244	0.101	35.10	0.29	-	100
	651	TPB	651585022	0.008	2.70	0.12	-	100
CT35	651	Es	6512857	0.096	9.80	0.25	-	100
	651	Le	6514229	0.005	0.50	0.04	-	100
	651	Mp	6514451	0.091	9.30	0.25	-	100
	651	Mr	6514455	0.073	7.40	0.05	-	100
	651	Vf	6516231	0.013	1.40	0.01	-	100
	651	GgA	651323320	0.698	71.50	0.25	-	100
CT43	651	Es	6512857	0.016	1.60	0.25	-	100
	651	Lb	6514223	0.012	1.20	0.40	-	100
	651	Le	6514229	0.155	15.50	0.04	-	100
	651	Mp	6514451	0.062	6.20	0.25	-	100
	651	Mr	6514455	0.604	60.60	0.05	-	100
	651	Te	6515829	0.021	2.10	0.25	-	100
	651	Tg	6515833	0.007	0.70	0.04	-	100
	651	Vf	6516231	0.017	1.70	0.01	-	100
	651	AbA	651202320	0.010	1.00	0.38	-	100
	651	GgA	651323320	0.022	2.20	0.25	-	100
	651	LcA	651422520	0.072	7.30	0.25	-	100
CT51	651	Cp	6512451	0.010	1.00	0.40	-	100
	651	Le	6514229	0.055	5.60	0.04	-	100
	651	Mp	6514451	0.053	5.40	0.25	-	100
	651	Mr	6514455	0.321	32.50	0.05	-	100
	651	Te	6515829	0.011	1.10	0.25	-	100
	651	Tg	6515833	0.013	1.30	0.04	-	100

Major Basin ID: GP

Area ID	Book Number	Map Unit	Soil ID	Area (sq mi)	Area (%)	XKSAT	Rock Percent (%)	Effective Rock (%)
CT51	651	Th	6515835	0.006	0.60	0.04	-	100
	651	Vf	6516231	0.007	0.70	0.01	-	100
	651	GgA	651323320	0.012	1.20	0.25	-	100
	651	LcA	651422520	0.460	46.60	0.25	-	100
	651	LcB	651422522	0.022	2.20	0.25	-	100
	651	PeA	651502920	0.005	0.50	0.37	-	100
	651	TfB	651583122	0.013	1.30	0.36	-	100
DV07	651	BE	6512228	0.135	20.90	0.24	-	100
	651	GYD	651326826	0.079	12.30	0.26	-	100
	651	MTB	651445822	0.049	7.50	0.15	-	100
	651	PWB	651506422	0.299	46.30	0.38	-	100
	651	TPB	651585022	0.084	13.00	0.12	-	100
DV56	651	Ae	6512029	0.023	8.20	0.39	-	100
	651	CO	6512448	0.002	0.60	0.29	20.00	100
	651	Ge	6513229	0.008	2.90	0.26	-	100
	651	RS	6515456	0.162	56.40	0.40	65.00	100
	651	AbA	651202320	0.007	2.50	0.38	-	100
	651	EbD	651282326	0.071	24.60	0.10	-	100
	651	GgA	651323320	0.014	4.80	0.25	-	100
DV67	651	Ae	6512029	0.071	14.10	0.39	-	100
	651	CO	6512448	0.012	2.50	0.29	20.00	100
	651	Ge	6513229	0.026	5.20	0.26	-	100
	651	PT	6515058	0.002	0.50	0.40	-	100
	651	RS	6515456	0.195	38.70	0.40	65.00	100
	651	AbA	651202320	0.023	4.50	0.38	-	100
	651	AdA	651202720	0.007	1.30	0.40	-	100
	651	EbD	651282326	0.076	15.10	0.10	-	100
	651	GgA	651323320	0.012	2.40	0.25	-	100
	651	LcA	651422520	0.071	14.20	0.25	-	100
	651	PsB	651505722	0.007	1.50	0.26	-	100
DV75	651	Cb	6512423	0.000	0.00	0.40	-	100
	651	Es	6512857	0.028	5.50	0.25	-	100
	651	GN	6513246	0.013	2.70	0.25	-	100
	651	Lb	6514223	0.004	0.70	0.40	-	100
	651	Ma	6514421	0.005	1.00	0.40	-	100
	651	Mp	6514451	0.005	1.10	0.25	-	100
	651	Mr	6514455	0.017	3.40	0.05	-	100
	651	Tu	6515861	0.022	4.40	0.25	-	100
	651	Ve	6516229	0.004	0.70	0.25	-	100
	651	EbD	651282326	0.004	0.90	0.10	-	100
	651	GgA	651323320	0.066	13.10	0.25	-	100
	651	LcA	651422520	0.333	66.50	0.25	-	100
DV83	651	Ge	6513229	0.000	0.20	0.26	-	100
	651	Mr	6514455	0.055	51.60	0.05	-	100
	651	Tw	6515865	0.002	2.20	0.05	-	100
	651	Vf	6516231	0.049	46.10	0.01	-	100
DV87	651	CV	6512462	0.016	1.60	0.39	-	100
	651	GN	6513246	0.169	16.80	0.25	-	100
	651	Mp	6514451	0.049	4.90	0.25	-	100
	651	Mr	6514455	0.333	33.20	0.05	-	100
	651	PT	6515058	0.002	0.10	0.40	-	100
	651	Th	6515835	0.001	0.10	0.04	-	100
	651	Tu	6515861	0.003	0.30	0.25	-	100
	651	Vf	6516231	0.102	10.20	0.01	-	100
	651	LcA	651422520	0.330	32.90	0.25	-	100
DV99	651	BE	6512228	0.093	7.60	0.24	-	100
	651	CV	6512462	0.022	1.80	0.39	-	100
	651	Mp	6514451	0.019	1.60	0.25	-	100
	651	PT	6515058	0.194	16.00	0.40	-	100
	651	Te	6515829	0.085	7.00	0.25	-	100
	651	Ve	6516229	0.098	8.00	0.25	-	100

Major Basin ID: GP

Area ID	Book Number	Map Unit	Soil ID	Area (sq mi)	Area (%)	XKSAT	Rock Percent (%)	Effective Rock (%)
DV99	651	LcA	651422520	0.240	19.70	0.25	-	100
	651	PeA	651502920	0.006	0.50	0.37	-	100
	651	PsA	651505720	0.008	0.60	0.25	-	100
	651	PWB	651506422	0.453	37.20	0.38	-	100
DVAF	651	CF	6512430	0.119	28.80	0.50	-	100
	651	MTB	651445822	0.009	2.30	0.15	-	100
	651	TPB	651585022	0.284	68.90	0.12	-	100
DVLP	651	BE	6512228	0.059	43.20	0.24	-	100
	651	PWB	651506422	0.077	56.80	0.38	-	100
DVNR	651	Aa	6512021	0.027	6.70	0.26	-	100
	651	Bs	6512257	0.009	2.20	0.39	-	100
	651	Bt	6512259	0.012	2.90	0.25	-	100
	651	Cb	6512423	0.042	10.40	0.40	-	100
	651	Ge	6513229	0.077	19.30	0.26	-	100
	651	Mr	6514455	0.013	3.30	0.05	-	100
	651	TD	6515826	0.021	5.10	1.20	-	100
	651	Tw	6515865	0.002	0.40	0.05	-	100
	651	Vf	6516231	0.002	0.50	0.01	-	100
	651	AbA	651202320	0.039	9.70	0.38	-	100
	651	AfA	651203120	0.139	34.70	0.38	-	100
	651	AGB	651203222	0.001	0.30	0.40	-	100
	651	GgA	651323320	0.013	3.20	0.25	-	100
	651	LcA	651422520	0.005	1.20	0.25	-	100
DW07	651	Le	6514229	0.085	17.60	0.04	-	100
	651	Mr	6514455	0.097	20.00	0.05	-	100
	651	Vf	6516231	0.013	2.60	0.01	-	100
	651	LcA	651422520	0.289	59.80	0.25	-	100
	651	RbA	651542320	0.000	0.00	0.26	-	100
DW99	651	Mr	6514455	0.024	15.50	0.05	-	100
	651	Vf	6516231	0.032	20.70	0.01	-	100
	651	LcA	651422520	0.083	53.40	0.25	-	100
	651	PeA	651502920	0.003	2.00	0.37	-	100
	651	RbA	651542320	0.013	8.30	0.26	-	100
GHAF	651	Br	6512255	0.367	65.20	1.05	-	100
	651	Bs	6512257	0.009	1.60	0.39	-	100
	651	Cb	6512423	0.005	1.00	0.40	-	100
	651	CO	6512448	0.013	2.40	0.29	20.00	100
	651	Ge	6513229	0.022	4.00	0.26	-	100
	651	Ma	6514421	0.052	9.20	0.40	-	100
	651	Vg	6516233	0.045	8.00	0.91	-	100
	651	Vh	6516235	0.031	5.50	0.27	-	100
	651	AbB	651202322	0.007	1.30	0.39	-	100
	651	GgA	651323320	0.010	1.80	0.25	-	100
GHNR	651	Aa	6512021	0.001	0.10	0.26	-	100
	651	Br	6512255	0.140	16.60	1.05	-	100
	651	Bs	6512257	0.013	1.60	0.39	-	100
	651	Cb	6512423	0.022	2.60	0.40	-	100
	651	CO	6512448	0.090	10.70	0.29	20.00	100
	651	Cp	6512451	0.093	11.10	0.40	-	100
	651	Ma	6514421	0.040	4.70	0.40	-	100
	651	TD	6515826	0.131	15.60	1.20	-	100
	651	Vh	6516235	0.195	23.20	0.27	-	100
	651	Vk	6516241	0.048	5.70	0.26	-	100
	651	CA2	65124202	0.032	3.80	0.38	-	100
	651	AbB	651202322	0.000	0.00	0.39	-	100
	651	GgA	651323320	0.018	2.10	0.25	-	100
	651	RpE	651545128	0.018	2.10	0.29	-	100
GL03	651	Aa	6512021	0.002	0.20	0.26	-	100
	651	Br	6512255	0.011	1.70	1.05	-	100
	651	Bs	6512257	0.014	2.10	0.39	-	100
	651	Cb	6512423	0.023	3.50	0.40	-	100

Area ID	Book Number	Map Unit	Soil ID	Area (sq mi)	Area (%)	XKSAT	Rock Percent (%)	Effective Rock (%)
Major Basin ID: GP								
GL03	651	CO	6512448	0.073	11.20	0.29	20.00	100
	651	TD	6515826	0.093	14.40	1.20	-	100
	651	Vh	6516235	0.003	0.50	0.27	-	100
	651	Vk	6516241	0.025	3.90	0.26	-	100
	651	CA2	65124202	0.075	11.60	0.38	-	100
	651	GgA	651323320	0.089	13.70	0.25	-	100
	651	LcA	651422520	0.074	11.40	0.25	-	100
	651	PeA	651502920	0.106	16.30	0.37	-	100
	651	RbA	651542320	0.048	7.40	0.26	-	100
	651	RpE	651545128	0.014	2.10	0.29	-	100
GL11	651	Cb	6512423	0.004	0.80	0.40	-	100
	651	CO	6512448	0.185	43.40	0.29	20.00	100
	651	Ma	6514421	0.019	4.40	0.40	-	100
	651	CA2	65124202	0.140	33.00	0.38	-	100
	651	AbB	651202322	0.003	0.70	0.39	-	100
	651	GgA	651323320	0.008	1.80	0.25	-	100
	651	LcA	651422520	0.006	1.40	0.25	-	100
	651	PeA	651502920	0.061	14.40	0.37	-	100
GL14	651	Aa	6512021	0.025	5.30	0.26	-	100
	651	Br	6512255	0.096	19.90	1.05	-	100
	651	Cb	6512423	0.018	3.80	0.40	-	100
	651	CO	6512448	0.003	0.60	0.29	20.00	100
	651	Ge	6513229	0.028	5.90	0.26	-	100
	651	Ma	6514421	0.237	49.30	0.40	-	100
	651	Vh	6516235	0.005	1.10	0.27	-	100
	651	CA2	65124202	0.035	7.30	0.38	-	100
	651	GgA	651323320	0.033	6.80	0.25	-	100
GLAF	651	Br	6512255	0.176	45.30	1.05	-	100
	651	Cb	6512423	0.124	31.90	0.40	-	100
	651	Ma	6514421	0.025	6.40	0.40	-	100
	651	TD	6515826	0.064	16.40	1.20	-	100
	651	GPI	651325036	0.000	0.00	0.00	-	100
GLGH	651	CO	6512448	0.059	74.40	0.29	20.00	100
	651	Ma	6514421	0.020	25.60	0.40	-	100
GR99	651	W	65164	0.047	3.60	0.00	-	100
	651	Mr	6514455	0.053	4.10	0.05	-	100
	651	Tw	6515865	0.679	51.80	0.05	-	100
	651	LcA	651422520	0.530	40.50	0.25	-	100
GRAF	651	Cb	6512423	0.008	0.90	0.40	-	100
	651	Le	6514229	0.024	2.70	0.04	-	100
	651	TD	6515826	0.001	0.10	1.20	-	100
	651	Tw	6515865	0.536	62.40	0.05	-	100
	651	CA2	65124202	0.120	14.00	0.38	-	100
	651	AbA	651202320	0.000	0.00	0.38	-	100
	651	GPI	651325036	0.011	1.20	0.00	-	100
	651	LcA	651422520	0.049	5.70	0.25	-	100
	651	PeA	651502920	0.111	12.90	0.37	-	100
GRNR	651	Aa	6512021	0.020	2.10	0.26	-	100
	651	Cb	6512423	0.123	13.00	0.40	-	100
	651	Es	6512857	0.023	2.40	0.25	-	100
	651	Ge	6513229	0.045	4.70	0.26	-	100
	651	Ma	6514421	0.019	2.00	0.40	-	100
	651	Mr	6514455	0.147	15.50	0.05	-	100
	651	TD	6515826	0.083	8.70	1.20	-	100
	651	Tw	6515865	0.001	0.10	0.05	-	100
	651	Vf	6516231	0.027	2.80	0.01	-	100
	651	Vh	6516235	0.047	5.00	0.27	-	100
	651	Vk	6516241	0.027	2.90	0.26	-	100
	651	AbA	651202320	0.013	1.40	0.38	-	100
	651	GgA	651323320	0.122	12.90	0.25	-	100
	651	LcA	651422520	0.209	22.00	0.25	-	100

* Non default value

Area ID	Book Number	Map Unit	Soil ID	Area (sq mi)	Area (%)	XKSAT	Rock Percent (%)	Effective Rock (%)
Major Basin ID: GP								
GRNR	651	PeA	651502920	0.037	3.90	0.37	-	100
	651	RbA	651542320	0.005	0.50	0.26	-	100
GW35	651	Mp	6514451	0.341	33.80	0.25	-	100
	651	Mr	6514455	0.300	29.70	0.05	-	100
	651	Tc	6515825	0.068	6.80	0.40	-	100
	651	Th	6515835	0.028	2.80	0.04	-	100
	651	Tu	6515861	0.006	0.60	0.25	-	100
	651	Vf	6516231	0.110	10.90	0.01	-	100
	651	LcA	651422520	0.151	15.00	0.25	-	100
	651	RbA	651542320	0.004	0.40	0.26	-	100
GW43	651	Lb	6514223	0.004	0.40	0.40	-	100
	651	Le	6514229	0.053	5.30	0.04	-	100
	651	Mp	6514451	0.096	9.70	0.25	-	100
	651	Mr	6514455	0.231	23.40	0.05	-	100
	651	Tc	6515825	0.008	0.80	0.40	-	100
	651	Te	6515829	0.043	4.40	0.25	-	100
	651	Tg	6515833	0.033	3.30	0.04	-	100
	651	Th	6515835	0.044	4.50	0.04	-	100
	651	Tw	6515865	0.013	1.30	0.05	-	100
	651	Vf	6516231	0.039	4.00	0.01	-	100
	651	GxA	651326720	0.010	1.00	0.23	-	100
	651	GxB	651326722	0.003	0.30	0.24	-	100
	651	LcA	651422520	0.351	35.50	0.25	-	100
	651	LcB	651422522	0.000	0.00	0.25	-	100
	651	RbA	651542320	0.048	4.80	0.26	-	100
	651	TfB	651583122	0.013	1.30	0.36	-	100
GW51	651	Es	6512857	0.003	0.30	0.25	-	100
	651	Le	6514229	0.040	4.10	0.04	-	100
	651	Mp	6514451	0.008	0.80	0.25	-	100
	651	Mr	6514455	0.303	31.50	0.05	-	100
	651	Ms	6514457	0.003	0.30	0.01	-	100
	651	Th	6515835	0.007	0.80	0.04	-	100
	651	Tu	6515861	0.012	1.20	0.25	-	100
	651	Tw	6515865	0.020	2.10	0.05	-	100
	651	Vf	6516231	0.008	0.80	0.01	-	100
	651	LcA	651422520	0.514	53.40	0.25	-	100
	651	LcB	651422522	0.003	0.40	0.25	-	100
	651	PeA	651502920	0.004	0.40	0.37	-	100
	651	RbA	651542320	0.038	3.90	0.26	-	100
	651	TfB	651583122	0.001	0.10	0.36	-	100
GW59	651	Es	6512857	0.012	1.30	0.25	-	100
	651	Le	6514229	0.023	2.40	0.04	-	100
	651	Mp	6514451	0.070	7.40	0.25	-	100
	651	Mr	6514455	0.291	30.80	0.05	-	100
	651	Ms	6514457	0.006	0.60	0.01	-	100
	651	Tg	6515833	0.009	0.90	0.04	-	100
	651	Tu	6515861	0.007	0.70	0.25	-	100
	651	Tw	6515865	0.224	23.80	0.05	-	100
	651	Vf	6516231	0.019	2.10	0.01	-	100
	651	GxA	651326720	0.000	0.00	0.23	-	100
	651	LcA	651422520	0.250	26.50	0.25	-	100
	651	PeA	651502920	0.007	0.70	0.37	-	100
	651	RbA	651542320	0.026	2.70	0.26	-	100
GW67	651	Le	6514229	0.094	10.50	0.04	-	100
	651	Mr	6514455	0.283	31.70	0.05	-	100
	651	Tg	6515833	0.008	0.90	0.04	-	100
	651	Tu	6515861	0.009	1.00	0.25	-	100
	651	Tw	6515865	0.170	19.00	0.05	-	100
	651	Vf	6516231	0.139	15.60	0.01	-	100
	651	LcA	651422520	0.190	21.30	0.25	-	100
GW91	651	Le	6514229	0.008	1.70	0.04	-	100
	651	Mr	6514455	0.069	14.40	0.05	-	100

* Non default value

Major Basin ID: GP

Area ID	Book Number	Map Unit	Soil ID	Area (sq mi)	Area (%)	XKSAT	Rock Percent (%)	Effective Rock (%)
GW91	651	Th	6515835	0.022	4.60	0.04	-	100
	651	Tw	6515865	0.032	6.70	0.05	-	100
	651	GxA	651326720	0.013	2.70	0.23	-	100
	651	LcA	651422520	0.148	30.90	0.25	-	100
	651	PeA	651502920	0.155	32.50	0.37	-	100
	651	RbA	651542320	0.031	6.50	0.26	-	100
GWLO	651	Aa	6512021	0.145	17.80	0.26	-	100
	651	Bs	6512257	0.000	0.00	0.39	-	100
	651	Cb	6512423	0.035	4.30	0.40	-	100
	651	Ma	6514421	0.129	15.90	0.40	-	100
	651	Mo	6514449	0.002	0.30	0.39	-	100
	651	Mr	6514455	0.002	0.20	0.05	-	100
	651	TD	6515826	0.062	7.60	1.20	-	100
	651	Va	6516221	0.002	0.30	0.39	-	100
	651	Vh	6516235	0.079	9.70	0.27	-	100
	651	AbA	651202320	0.090	11.10	0.38	-	100
	651	AfA	651203120	0.148	18.10	0.38	-	100
	651	GgA	651323320	0.097	11.90	0.25	-	100
	651	GxA	651326720	0.000	0.00	0.23	-	100
	651	LcA	651422520	0.019	2.40	0.25	-	100
	651	RbA	651542320	0.004	0.40	0.26	-	100
GWNR	651	Aa	6512021	0.008	1.10	0.26	-	100
	651	Bs	6512257	0.022	3.20	0.39	-	100
	651	Cb	6512423	0.087	12.50	0.40	-	100
	651	Es	6512857	0.009	1.20	0.25	-	100
	651	Le	6514229	0.005	0.70	0.04	-	100
	651	Ma	6514421	0.001	0.10	0.40	-	100
	651	Mp	6514451	0.044	6.30	0.25	-	100
	651	Mr	6514455	0.038	5.50	0.05	-	100
	651	TD	6515826	0.062	8.80	1.20	-	100
	651	Tw	6515865	0.026	3.70	0.05	-	100
	651	Va	6516221	0.009	1.30	0.39	-	100
	651	Vf	6516231	0.005	0.60	0.01	-	100
	651	Vh	6516235	0.026	3.80	0.27	-	100
	651	AbA	651202320	0.035	5.00	0.38	-	100
	651	GgA	651323320	0.032	4.60	0.25	-	100
	651	GPI	651325036	0.013	1.80	0.00	-	100
	651	LcA	651422520	0.266	38.20	0.25	-	100
	651	PeA	651502920	0.001	0.10	0.37	-	100
	651	RbA	651542320	0.011	1.50	0.26	-	100
HV01	651	BE	6512228	0.008	1.80	0.24	-	100
	651	PT	6515058	0.046	10.30	0.40	-	100
	651	Vf	6516231	0.076	17.20	0.01	-	100
	651	PWB	651506422	0.314	70.70	0.38	-	100
HV07	651	CF	6512430	0.041	13.50	0.50	-	100
	651	PT	6515058	0.230	75.70	0.40	-	100
	651	PWB	651506422	0.031	10.10	0.38	-	100
	651	TPB	651585022	0.002	0.70	0.12	-	100
HV55	645	18	64518	0.385	18.80	0.33	15.00	100
	645	21	64521	0.035	1.70	0.38	-	100
	645	68	64568	0.071	3.40	0.63	-	100
	645	70	64570	0.056	2.70	0.36	-	100
	645	98	64598	0.091	4.40	0.37	-	100
	645	101	645101	0.287	14.00	0.28	-	100
	645	110	645110	0.199	9.70	0.13	-	100
	651	CO	6512448	0.035	1.70	0.29	20.00	100
	651	CV	6512462	0.134	6.50	0.39	-	100
	651	PT	6515058	0.135	6.60	0.40	-	100
	651	RS	6515456	0.369	17.90	0.40	65.00	100
	651	AfA	651203120	0.038	1.90	0.38	-	100
	651	AGB	651203222	0.040	1.90	0.40	-	100
	651	LcA	651422520	0.007	0.40	0.25	-	100

* Non default value

Major Basin ID: GP

Area ID	Book Number	Map Unit	Soil ID	Area (sq mi)	Area (%)	XKSAT	Rock Percent (%)	Effective Rock (%)
HV55	651	PeA	651502920	0.030	1.50	0.37	-	100
	651	PRB	651505422	0.142	6.90	0.28	-	100
HV67	651	CO	6512448	0.068	12.50	0.29	20.00	100
	651	PT	6515058	0.018	3.20	0.40	-	100
	651	RS	6515456	0.317	58.30	0.40	65.00	100
	651	AGB	651203222	0.000	0.00	0.40	-	100
	651	GWD	651326426	0.070	12.90	0.35	-	100
	651	GxB	651326722	0.007	1.30	0.24	-	100
	651	PeA	651502920	0.001	0.20	0.37	-	100
	651	PRB	651505422	0.028	5.10	0.28	-	100
	651	RbA	651542320	0.035	6.50	0.26	-	100
HV75	645	3	6453	0.002	0.20	0.58	-	100
	645	112	645112	0.000	0.00	0.39	-	100
	645	115	645115	0.005	0.50	0.39	-	100
	651	AL	6512042	0.406	42.40	0.40	-	100
	651	GN	6513246	0.096	10.10	0.25	-	100
	651	PT	6515058	0.002	0.20	0.40	-	100
	651	TD	6515826	0.003	0.30	1.20	-	100
	651	AGB	651203222	0.372	38.80	0.40	-	100
	651	GWD	651326426	0.051	5.30	0.35	-	100
	651	LcA	651422520	0.015	1.60	0.25	-	100
	651	PeA	651502920	0.006	0.60	0.37	-	100
HV83	651	RS	6515456	0.011	30.10	0.40	65.00	100
	651	GWD	651326426	0.024	69.90	0.35	-	100
HV87	651	RS	6515456	0.152	53.30	0.40	65.00	100
	651	GWD	651326426	0.040	13.80	0.35	-	100
	651	PWB	651506422	0.094	32.90	0.38	-	100
HV93	651	CO	6512448	0.001	0.70	0.29	20.00	100
	651	GN	6513246	0.014	8.00	0.25	-	100
	651	RS	6515456	0.051	29.70	0.40	65.00	100
	651	GWD	651326426	0.000	0.10	0.35	-	100
	651	GYD	651326826	0.008	4.90	0.26	-	100
	651	PWB	651506422	0.097	56.60	0.38	-	100
HVAF	645	10	64510	0.002	0.70	0.94	-	100
	651	CF	6512430	0.127	59.20	0.50	-	100
	651	GM	6513244	0.083	38.50	0.29	-	100
	651	PT	6515058	0.004	1.70	0.40	-	100
HVLP	651	BE	6512228	0.009	4.60	0.24	-	100
	651	CV	6512462	0.076	38.30	0.39	-	100
	651	GN	6513246	0.001	0.30	0.25	-	100
	651	GYD	651326826	0.058	29.20	0.26	-	100
	651	PWB	651506422	0.055	27.60	0.38	-	100
HVNR	645	3	6453	0.000	0.10	0.58	-	100
	645	10	64510	0.001	0.40	0.94	-	100
	645	115	645115	0.002	1.00	0.39	-	100
	651	AL	6512042	0.015	7.50	0.40	-	100
	651	GM	6513244	0.038	18.90	0.29	-	100
	651	TD	6515826	0.068	33.90	1.20	-	100
	651	AGB	651203222	0.077	38.00	0.40	-	100
HVRS	645	3	6453	0.002	0.30	0.58	-	100
	645	115	645115	0.001	0.20	0.39	-	100
	645	118	645118	0.001	0.10	0.42	-	100
	651	AL	6512042	0.123	19.50	0.40	-	100
	651	GM	6513244	0.081	12.80	0.29	-	100
	651	GN	6513246	0.011	1.80	0.25	-	100
	651	AGB	651203222	0.365	57.90	0.40	-	100
	651	GWD	651326426	0.013	2.00	0.35	-	100
	651	PWB	651506422	0.027	4.30	0.38	-	100
	651	TSC	651585624	0.006	1.00	0.14	-	100
JM63	645	3	6453	0.043	5.10	0.58	-	100

* Non default value

Major Basin ID: GP

Area ID	Book Number	Map Unit	Soil ID	Area (sq mi)	Area (%)	XKSAT	Rock Percent (%)	Effective Rock (%)
JM63	645	18	64518	0.022	2.60	0.33	15.00	100
	645	44	64544	0.033	4.00	0.03	-	100
	645	68	64568	0.034	4.00	0.63	-	100
	645	98	64598	0.125	14.90	0.37	-	100
	645	100	645100	0.168	20.00	0.40	20.00	100
	645	101	645101	0.030	3.60	0.28	-	100
	645	110	645110	0.385	45.80	0.13	-	100
JM67	645	3	6453	0.038	9.80	0.58	-	100
	645	18	64518	0.096	25.20	0.33	15.00	100
	645	100	645100	0.016	4.30	0.40	20.00	100
	645	110	645110	0.062	16.30	0.13	-	100
	645	112	645112	0.007	1.80	0.39	-	100
	651	PT	6515058	0.015	3.90	0.40	-	100
	651	RS	6515456	0.063	16.40	0.40	65.00	100
	651	AGB	651203222	0.052	13.70	0.40	-	100
	651	GWD	651326426	0.032	8.50	0.35	-	100
JM75	645	3	6453	0.037	3.30	0.58	-	100
	645	98	64598	0.085	7.60	0.37	-	100
	645	100	645100	0.570	51.30	0.40	20.00	100
	645	110	645110	0.169	15.20	0.13	-	100
	645	112	645112	0.026	2.30	0.39	-	100
	645	115	645115	0.225	20.20	0.39	-	100
	651	PT	6515058	0.000	0.00	0.40	-	100
JM76	645	3	6453	0.019	11.30	0.58	-	100
	645	10	64510	0.000	0.10	0.94	-	100
	645	98	64598	0.005	3.00	0.37	-	100
	645	100	645100	0.000	0.10	0.40	20.00	100
	645	112	645112	0.087	51.70	0.39	-	100
	645	115	645115	0.057	33.80	0.39	-	100
JM80	645	3	6453	0.073	44.60	0.58	-	100
	645	10	64510	0.001	0.30	0.94	-	100
	645	18	64518	0.045	27.20	0.33	15.00	100
	645	21	64521	0.008	4.90	0.38	-	100
	645	55	64555	0.007	4.00	0.27	-	100
	645	75	64575	0.010	6.30	0.23	-	100
	645	100	645100	0.009	5.20	0.40	20.00	100
	645	110	645110	0.001	0.80	0.13	-	100
	645	115	645115	0.011	6.70	0.39	-	100
JM99	645	13	64513	0.322	56.60	0.01	-	100
	645	18	64518	0.029	5.20	0.33	15.00	100
	645	21	64521	0.002	0.40	0.38	-	100
	645	53	64553	0.011	1.90	0.02	-	100
	645	110	645110	0.190	33.50	0.13	-	100
	651	PT	6515058	0.002	0.30	0.40	-	100
	651	Vf	6516231	0.003	0.50	0.01	-	100
	651	PWB	651506422	0.009	1.60	0.38	-	100
JMAF	645	10	64510	0.005	3.10	0.94	-	100
	645	18	64518	0.050	33.90	0.33	15.00	100
	645	110	645110	0.061	41.60	0.13	-	100
	651	CF	6512430	0.003	2.20	0.50	-	100
	651	PT	6515058	0.028	19.20	0.40	-	100
JMLP	645	13	64513	0.104	14.80	0.01	-	100
	645	18	64518	0.041	5.80	0.33	15.00	100
	645	21	64521	0.136	19.30	0.38	-	100
	645	110	645110	0.225	31.90	0.13	-	100
	645	112	645112	0.075	10.60	0.39	-	100
	651	CO	6512448	0.114	16.20	0.29	20.00	100
	651	PT	6515058	0.010	1.40	0.40	-	100
JMNR	645	3	6453	0.062	41.90	0.58	-	100
	645	10	64510	0.055	37.00	0.94	-	100
	645	55	64555	0.003	2.00	0.27	-	100

* Non default value

Major Basin ID: GP

Area ID	Book Number	Map Unit	Soil ID	Area (sq mi)	Area (%)	XKSAT	Rock Percent (%)	Effective Rock (%)
JMNR	645	75	64575	0.000	0.10	0.23	-	100
	645	100	645100	0.002	1.30	0.40	20.00	100
	645	112	645112	0.016	10.60	0.39	-	100
	645	115	645115	0.011	7.10	0.39	-	100
JMRS	645	13	64513	0.024	4.20	0.01	-	100
	645	18	64518	0.023	4.10	0.33	15.00	100
	645	21	64521	0.021	3.70	0.38	-	100
	645	100	645100	0.067	11.90	0.40	20.00	100
	645	110	645110	0.278	49.10	0.13	-	100
	645	112	645112	0.016	2.90	0.39	-	100
	645	115	645115	0.082	14.50	0.39	-	100
	645	118	645118	0.053	9.30	0.42	-	100
	651	AL	6512042	0.001	0.10	0.40	-	100
	651	TSC	651585624	0.002	0.30	0.14	-	100
LO51	651	Cp	6512451	0.050	4.40	0.40	-	100
	651	Es	6512857	0.052	4.60	0.25	-	100
	651	Ge	6513229	0.049	4.30	0.26	-	100
	651	Mp	6514451	0.009	0.80	0.25	-	100
	651	Mr	6514455	0.028	2.50	0.05	-	100
	651	RS	6515456	0.440	39.00	0.40	65.00	100
	651	TD	6515826	0.244	21.60	1.20	-	100
	651	Tu	6515861	0.039	3.40	0.25	-	100
	651	Tw	6515865	0.000	0.00	0.05	-	100
	651	Vf	6516231	0.065	5.70	0.01	-	100
	651	AbA	651202320	0.006	0.50	0.38	-	100
	651	CrB	651245522	0.020	1.80	0.40	-	100
	651	GgA	651323320	0.123	10.90	0.25	-	100
	651	RbA	651542320	0.005	0.50	0.26	-	100
LO67	651	Aa	6512021	0.011	0.90	0.26	-	100
	651	Ae	6512029	0.056	4.60	0.39	-	100
	651	Es	6512857	0.252	20.70	0.25	-	100
	651	Ge	6513229	0.222	18.30	0.26	-	100
	651	Le	6514229	0.015	1.20	0.04	-	100
	651	Mp	6514451	0.097	8.00	0.25	-	100
	651	Mr	6514455	0.112	9.20	0.05	-	100
	651	TD	6515826	0.041	3.30	1.20	-	100
	651	Te	6515829	0.032	2.60	0.25	-	100
	651	Tw	6515865	0.158	13.00	0.05	-	100
	651	Vf	6516231	0.039	3.20	0.01	-	100
	651	AbA	651202320	0.003	0.20	0.38	-	100
	651	CrB	651245522	0.009	0.70	0.40	-	100
	651	GgA	651323320	0.104	8.60	0.25	-	100
	651	LcA	651422520	0.067	5.50	0.25	-	100
LO75	651	Es	6512857	0.090	9.30	0.25	-	100
	651	Le	6514229	0.002	0.20	0.04	-	100
	651	Mp	6514451	0.278	28.60	0.25	-	100
	651	Mr	6514455	0.191	19.70	0.05	-	100
	651	Te	6515829	0.004	0.40	0.25	-	100
	651	Ve	6516229	0.003	0.30	0.25	-	100
	651	Vf	6516231	0.066	6.80	0.01	-	100
	651	GgA	651323320	0.006	0.60	0.25	-	100
	651	LcA	651422520	0.308	31.70	0.25	-	100
	651	PeA	651502920	0.023	2.40	0.37	-	100
MEAF	651	Br	6512255	0.001	0.00	1.05	-	100
	651	Cb	6512423	0.219	16.00	0.40	-	100
	651	Le	6514229	0.106	7.80	0.04	-	100
	651	Ma	6514421	0.031	2.20	0.40	-	100
	651	Mr	6514455	0.023	1.70	0.05	-	100
	651	TD	6515826	0.053	3.90	1.20	-	100
	651	Te	6515829	0.006	0.40	0.25	-	100
	651	Tw	6515865	0.035	2.60	0.05	-	100
	651	Va	6516221	0.031	2.30	0.39	-	100

* Non default value

Major Basin ID: GP

Area ID	Book Number	Map Unit	Soil ID	Area (sq mi)	Area (%)	XKSAT	Rock Percent (%)	Effective Rock (%)
MEAF	651	Vg	6516233	0.061	4.40	0.91	-	100
	651	Vh	6516235	0.007	0.50	0.27	-	100
	651	CA2	65124202	0.088	6.50	0.38	-	100
	651	AbA	651202320	0.069	5.10	0.38	-	100
	651	GgA	651323320	0.135	9.90	0.25	-	100
	651	GPI	651325036	0.003	0.20	0.00	-	100
	651	GxA	651326720	0.005	0.40	0.23	-	100
	651	LcA	651422520	0.375	27.40	0.25	-	100
	651	PeA	651502920	0.060	4.30	0.37	-	100
	651	RbA	651542320	0.037	2.70	0.26	-	100
	651	TfB	651583122	0.026	1.90	0.36	-	100
NO07	651	Lb	6514223	0.007	1.90	0.40	-	100
	651	CA2	65124202	0.000	0.00	0.38	-	100
	651	LcA	651422520	0.231	68.00	0.25	-	100
	651	PeA	651502920	0.102	30.00	0.37	-	100
NO11	651	Aa	6512021	0.029	3.30	0.26	-	100
	651	Br	6512255	0.045	5.20	1.05	-	100
	651	CO	6512448	0.029	3.30	0.29	20.00	100
	651	Ge	6513229	0.072	8.30	0.26	-	100
	651	Ma	6514421	0.142	16.80	0.40	-	100
	651	Vg	6516233	0.059	6.80	0.91	-	100
	651	Vh	6516235	0.004	0.40	0.27	-	100
	651	CA2	65124202	0.322	37.40	0.38	-	100
	651	GgA	651323320	0.029	3.30	0.25	-	100
	651	PeA	651502920	0.131	15.20	0.37	-	100
NO99	651	Aa	6512021	0.001	0.10	0.26	-	100
	651	Bs	6512257	0.045	5.20	0.39	-	100
	651	Cb	6512423	0.019	2.20	0.40	-	100
	651	Ge	6513229	0.020	2.30	0.26	-	100
	651	Lb	6514223	0.034	4.00	0.40	-	100
	651	Ma	6514421	0.005	0.60	0.40	-	100
	651	Mp	6514451	0.000	0.00	0.25	-	100
	651	Tc	6515825	0.010	1.20	0.40	-	100
	651	TD	6515826	0.075	8.70	1.20	-	100
	651	GgA	651323320	0.003	0.30	0.25	-	100
	651	GPI	651325036	0.006	0.70	0.00	-	100
	651	GxA	651326720	0.071	8.20	0.23	-	100
	651	LcA	651422520	0.061	7.10	0.25	-	100
	651	PeA	651502920	0.145	16.90	0.37	-	100
	651	RaA	651542120	0.074	8.60	0.39	-	100
	651	RbA	651542320	0.290	33.80	0.26	-	100
NOAF	651	Br	6512255	0.128	44.90	1.05	-	100
	651	Cb	6512423	0.069	24.30	0.40	-	100
	651	Ma	6514421	0.001	0.50	0.40	-	100
	651	TD	6515826	0.037	12.80	1.20	-	100
	651	Vg	6516233	0.050	17.50	0.91	-	100
NONR	651	Aa	6512021	0.002	0.30	0.26	-	100
	651	Ao	6512049	0.078	9.30	0.04	-	100
	651	Br	6512255	0.003	0.40	1.05	-	100
	651	Bs	6512257	0.012	1.50	0.39	-	100
	651	Cb	6512423	0.046	5.50	0.40	-	100
	651	Cp	6512451	0.006	0.80	0.40	-	100
	651	Gt	6513259	0.110	13.30	0.04	-	100
	651	Ma	6514421	0.005	0.70	0.40	-	100
	651	Mr	6514455	0.267	32.10	0.05	-	100
	651	TD	6515826	0.008	1.00	1.20	-	100
	651	Tt	6515859	0.015	1.80	0.04	-	100
	651	Tw	6515865	0.077	9.30	0.05	-	100
	651	Vf	6516231	0.012	1.50	0.01	-	100
	651	GgA	651323320	0.101	12.20	0.25	-	100
	651	GPI	651325036	0.001	0.10	0.00	-	100
	651	GxA	651326720	0.020	2.50	0.23	-	100

Major Basin ID: GP

Area ID	Book Number	Map Unit	Soil ID	Area (sq mi)	Area (%)	XKSAT	Rock Percent (%)	Effective Rock (%)
NONR	651	LcA	651422520	0.047	5.70	0.25	-	100
	651	RbA	651542320	0.018	2.20	0.26	-	100
OL03	651	Mp	6514451	0.022	2.00	0.25	-	100
	651	Mr	6514455	0.031	2.80	0.05	-	100
	651	Vf	6516231	0.045	4.10	0.01	-	100
	651	LcA	651422520	0.938	85.30	0.25	-	100
	651	PeA	651502920	0.037	3.40	0.37	-	100
	651	RbA	651542320	0.026	2.30	0.26	-	100
OL11	651	CA2	65124202	0.086	25.40	0.38	-	100
	651	LcA	651422520	0.055	16.30	0.25	-	100
	651	PeA	651502920	0.198	58.30	0.37	-	100
OL99	651	Cb	6512423	0.020	4.50	0.40	-	100
	651	TD	6515826	0.074	17.00	1.20	-	100
	651	Vh	6516235	0.038	8.70	0.27	-	100
	651	GgA	651323320	0.000	0.00	0.25	-	100
	651	GPI	651325036	0.004	1.00	0.00	-	100
	651	GxA	651326720	0.003	0.70	0.23	-	100
	651	LcA	651422520	0.223	51.00	0.25	-	100
	651	PeA	651502920	0.020	4.70	0.37	-	100
	651	RbA	651542320	0.054	12.30	0.26	-	100
OLAF	651	Br	6512255	0.104	10.20	1.05	-	100
	651	Cb	6512423	0.206	20.10	0.40	-	100
	651	TD	6515826	0.003	0.30	1.20	-	100
	651	Vf	6516231	0.011	1.10	0.01	-	100
	651	Vg	6516233	0.249	24.30	0.91	-	100
	651	CA2	65124202	0.188	18.30	0.38	-	100
	651	GPI	651325036	0.008	0.80	0.00	-	100
	651	LcA	651422520	0.038	3.70	0.25	-	100
	651	PeA	651502920	0.218	21.30	0.37	-	100
OLNR	651	Ao	6512049	0.038	5.50	0.04	-	100
	651	Bt	6512259	0.000	0.00	0.25	-	100
	651	Cb	6512423	0.070	10.00	0.40	-	100
	651	Ge	6513229	0.042	6.10	0.26	-	100
	651	Gt	6513259	0.082	11.80	0.04	-	100
	651	Le	6514229	0.086	12.30	0.04	-	100
	651	Mr	6514455	0.090	12.90	0.05	-	100
	651	TD	6515826	0.009	1.30	1.20	-	100
	651	Tg	6515833	0.014	2.00	0.04	-	100
	651	Th	6515835	0.004	0.60	0.04	-	100
	651	Tw	6515865	0.023	3.30	0.05	-	100
	651	Vf	6516231	0.013	1.80	0.01	-	100
	651	Vh	6516235	0.011	1.60	0.27	-	100
	651	Vk	6516241	0.005	0.70	0.26	-	100
	651	GgA	651323320	0.187	26.90	0.25	-	100
	651	GPI	651325036	0.005	0.70	0.00	-	100
	651	RbA	651542320	0.016	2.20	0.26	-	100
PE03	651	Tw	6515865	0.005	1.10	0.05	-	100
	651	LcA	651422520	0.405	98.90	0.25	-	100
PE07	651	Mr	6514455	0.048	8.30	0.05	-	100
	651	Tw	6515865	0.037	6.40	0.05	-	100
	651	LcA	651422520	0.490	85.30	0.25	-	100
PE11	651	Mr	6514455	0.083	9.00	0.05	-	100
	651	Tw	6515865	0.153	16.50	0.05	-	100
	651	Vf	6516231	0.033	3.60	0.01	-	100
	651	LcA	651422520	0.656	70.90	0.25	-	100
	651	PeA	651502920	0.000	0.00	0.37	-	100
PE35	651	Aa	6512021	0.060	6.10	0.26	-	100
	651	Br	6512255	0.027	2.70	1.05	-	100
	651	Cb	6512423	0.003	0.30	0.40	-	100
	651	Ge	6513229	0.037	3.80	0.26	-	100

Major Basin ID: GP

Area ID	Book Number	Map Unit	Soil ID	Area (sq mi)	Area (%)	XKSAT	Rock Percent (%)	Effective Rock (%)
PE35	651	Ma	6514421	0.005	0.50	0.40	-	100
	651	Vh	6516235	0.038	3.90	0.27	-	100
	651	Vk	6516241	0.018	1.90	0.26	-	100
	651	GgA	651323320	0.790	80.90	0.25	-	100
PE43	651	Aa	6512021	0.016	1.60	0.26	-	100
	651	Ao	6512049	0.002	0.20	0.04	-	100
	651	Bs	6512257	0.026	2.60	0.39	-	100
	651	Cb	6512423	0.007	0.70	0.40	-	100
	651	Es	6512857	0.091	9.20	0.25	-	100
	651	Ge	6513229	0.012	1.20	0.26	-	100
	651	Le	6514229	0.069	6.90	0.04	-	100
	651	Ma	6514421	0.004	0.40	0.40	-	100
	651	Mp	6514451	0.036	3.60	0.25	-	100
	651	Mr	6514455	0.177	17.70	0.05	-	100
	651	Tt	6515859	0.008	0.80	0.04	-	100
	651	Tw	6515865	0.012	1.20	0.05	-	100
	651	Vg	6516233	0.004	0.40	0.91	-	100
	651	Vh	6516235	0.066	6.60	0.27	-	100
	651	GgA	651323320	0.401	40.20	0.25	-	100
	651	LcA	651422520	0.067	6.70	0.25	-	100
PE97	651	Br	6512255	0.005	0.80	1.05	-	100
	651	Bs	6512257	0.004	0.80	0.39	-	100
	651	Cb	6512423	0.015	2.60	0.40	-	100
	651	Es	6512857	0.022	4.00	0.25	-	100
	651	Ge	6513229	0.004	0.80	0.26	-	100
	651	Ma	6514421	0.000	0.10	0.40	-	100
	651	Mp	6514451	0.025	4.40	0.25	-	100
	651	Mr	6514455	0.038	6.80	0.05	-	100
	651	TD	6515826	0.046	8.30	1.20	-	100
	651	Tw	6515865	0.022	4.00	0.05	-	100
	651	Vg	6516233	0.017	3.00	0.91	-	100
	651	AbA	651202320	0.000	0.00	0.38	-	100
	651	GgA	651323320	0.008	1.50	0.25	-	100
	651	GxA	651326720	0.008	1.50	0.23	-	100
	651	LcA	651422520	0.292	52.20	0.25	-	100
	651	PeA	651502920	0.052	9.20	0.37	-	100
PE99	651	Tw	6515865	0.009	3.00	0.05	-	100
	651	LcA	651422520	0.286	97.00	0.25	-	100
PEAF	651	Cb	6512423	0.007	1.30	0.40	-	100
	651	TD	6515826	0.001	0.10	1.20	-	100
	651	Tw	6515865	0.007	1.40	0.05	-	100
	651	Vf	6516231	0.002	0.30	0.01	-	100
	651	Vg	6516233	0.023	4.30	0.91	-	100
	651	CA2	65124202	0.127	23.90	0.38	-	100
	651	LcA	651422520	0.043	8.00	0.25	-	100
	651	PeA	651502920	0.322	60.70	0.37	-	100
PENR	651	Aa	6512021	0.030	15.10	0.26	-	100
	651	An	6512047	0.000	0.10	0.05	-	100
	651	Ao	6512049	0.029	14.70	0.04	-	100
	651	Br	6512255	0.006	3.00	1.05	-	100
	651	Bs	6512257	0.015	7.80	0.39	-	100
	651	Bt	6512259	0.005	2.50	0.25	-	100
	651	Cb	6512423	0.018	9.20	0.40	-	100
	651	Ge	6513229	0.013	6.40	0.26	-	100
	651	Ma	6514421	0.021	10.70	0.40	-	100
	651	TD	6515826	0.007	3.80	1.20	-	100
	651	AbA	651202320	0.030	15.30	0.38	-	100
	651	GgA	651323320	0.023	11.40	0.25	-	100
PP03	651	BE	6512228	0.136	41.70	0.24	-	100
	651	GWD	651326426	0.012	3.50	0.35	-	100
	651	PWB	651506422	0.178	54.70	0.38	-	100

Major Basin ID: GP

Area ID	Book Number	Map Unit	Soil ID	Area (sq mi)	Area (%)	XKSAT	Rock Percent (%)	Effective Rock (%)
PP07	651	GWD	651326426	0.001	0.30	0.35	-	100
	651	GYD	651326826	0.044	22.80	0.26	-	100
	651	PWB	651506422	0.054	27.40	0.38	-	100
	651	TPB	651585022	0.097	49.50	0.12	-	100
PP67	651	CO	6512448	0.001	1.10	0.29	20.00	100
	651	GxB	651326722	0.001	1.50	0.24	-	100
	651	LcA	651422520	0.054	56.30	0.25	-	100
	651	PeA	651502920	0.035	35.90	0.37	-	100
	651	PRB	651505422	0.005	5.20	0.28	-	100
PP73	651	AL	6512042	0.008	1.50	0.40	-	100
	651	GgA	651323320	0.097	17.80	0.25	-	100
	651	LcA	651422520	0.258	47.40	0.25	-	100
	651	PeA	651502920	0.015	2.80	0.37	-	100
	651	PRB	651505422	0.166	30.50	0.28	-	100
PP75	651	AL	6512042	0.181	43.00	0.40	-	100
	651	CO	6512448	0.023	5.50	0.29	20.00	100
	651	TD	6515826	0.012	2.80	1.20	-	100
	651	AGB	651203222	0.040	9.40	0.40	-	100
	651	GgA	651323320	0.054	12.90	0.25	-	100
	651	LcA	651422520	0.067	15.90	0.25	-	100
	651	PeA	651502920	0.021	5.10	0.37	-	100
	651	PRB	651505422	0.023	5.40	0.28	-	100
PP77	651	GM	6513244	0.040	14.80	0.29	-	100
	651	GN	6513246	0.028	10.40	0.25	-	100
	651	TD	6515826	0.000	0.00	1.20	-	100
	651	AGB	651203222	0.202	74.70	0.40	-	100
PP81	651	GN	6513246	0.163	82.90	0.25	-	100
	651	Vf	6516231	0.034	17.10	0.01	-	100
PP87	651	CV	6512462	0.017	1.70	0.39	-	100
	651	GN	6513246	0.450	45.80	0.25	-	100
	651	GWD	651326426	0.121	12.30	0.35	-	100
	651	PWB	651506422	0.394	40.10	0.38	-	100
PP91	651	CV	6512462	0.101	62.60	0.39	-	100
	651	GN	6513246	0.031	19.10	0.25	-	100
	651	PWB	651506422	0.029	18.30	0.38	-	100
PPAF	651	CF	6512430	0.209	77.60	0.50	-	100
	651	TPB	651585022	0.061	22.40	0.12	-	100
PPLP	651	BE	6512228	0.103	11.60	0.24	-	100
	651	CV	6512462	0.135	15.20	0.39	-	100
	651	GN	6513246	0.166	18.80	0.25	-	100
	651	GYD	651326826	0.005	0.60	0.26	-	100
	651	PWB	651506422	0.477	53.80	0.38	-	100
PPNR	651	GM	6513244	0.011	4.70	0.29	-	100
	651	TD	6515826	0.063	26.60	1.20	-	100
	651	AGB	651203222	0.163	68.70	0.40	-	100
RG07	651	BE	6512228	0.108	30.90	0.24	-	100
	651	PT	6515058	0.000	0.00	0.40	-	100
	651	GYD	651326826	0.017	4.90	0.26	-	100
	651	MTB	651445822	0.009	2.40	0.15	-	100
	651	PRB	651505422	0.073	20.90	0.28	-	100
	651	PWB	651506422	0.133	38.00	0.38	-	100
	651	TPB	651585022	0.010	2.80	0.12	-	100
RG93	651	Mp	6514451	0.010	3.90	0.25	-	100
	651	PT	6515058	0.058	23.30	0.40	-	100
	651	Te	6515829	0.024	9.50	0.25	-	100
	651	GxA	651326720	0.008	3.40	0.23	-	100
	651	LcA	651422520	0.149	60.00	0.25	-	100
RGAF	651	Cb	6512423	0.006	1.70	0.40	-	100
	651	CF	6512430	0.000	0.10	0.50	-	100

Major Basin ID: GP

Area ID	Book Number	Map Unit	Soil ID	Area (sq mi)	Area (%)	XKSAT	Rock Percent (%)	Effective Rock (%)
RGAF	651	TD	6515826	0.002	0.50	1.20	-	100
	651	CA2	65124202	0.011	3.40	0.38	-	100
	651	AbA	651202320	0.010	3.10	0.38	-	100
	651	MTB	651445822	0.003	0.80	0.15	-	100
	651	TfA	651583120	0.010	3.10	0.37	-	100
	651	TPB	651585022	0.290	87.30	0.12	-	100
RGLP	651	BE	6512228	0.033	8.00	0.24	-	100
	651	Mp	6514451	0.007	1.60	0.25	-	100
	651	PT	6515058	0.123	30.10	0.40	-	100
	651	Te	6515829	0.003	0.70	0.25	-	100
	651	Ve	6516229	0.070	17.10	0.25	-	100
	651	LcA	651422520	0.056	13.50	0.25	-	100
	651	PsA	651505720	0.001	0.30	0.25	-	100
	651	PWB	651506422	0.117	28.60	0.38	-	100
RO99	651	W	65164	0.056	13.50	0.00	-	100
	651	Mr	6514455	0.044	10.50	0.05	-	100
	651	LcA	651422520	0.314	76.00	0.25	-	100
SK67	651	Aa	6512021	0.061	6.50	0.26	-	100
	651	Bs	6512257	0.004	0.40	0.39	-	100
	651	Bt	6512259	0.002	0.30	0.25	-	100
	651	Cb	6512423	0.021	2.30	0.40	-	100
	651	Cp	6512451	0.007	0.80	0.40	-	100
	651	Le	6514229	0.006	0.60	0.04	-	100
	651	Ma	6514421	0.003	0.30	0.40	-	100
	651	Mp	6514451	0.012	1.30	0.25	-	100
	651	Mr	6514455	0.032	3.40	0.05	-	100
	651	Ta	6515821	0.002	0.20	0.25	-	100
	651	Tc	6515825	0.009	0.90	0.40	-	100
	651	TD	6515826	0.032	3.40	1.20	-	100
	651	Te	6515829	0.020	2.10	0.25	-	100
	651	Tg	6515833	0.010	1.10	0.04	-	100
	651	Th	6515835	0.002	0.20	0.04	-	100
	651	Tu	6515861	0.010	1.10	0.25	-	100
	651	Tw	6515865	0.068	7.20	0.05	-	100
	651	Vf	6516231	0.009	1.00	0.01	-	100
	651	Vk	6516241	0.002	0.20	0.26	-	100
	651	GgA	651323320	0.188	20.00	0.25	-	100
	651	GxA	651326720	0.010	1.10	0.23	-	100
	651	LcA	651422520	0.358	37.90	0.25	-	100
	651	LcB	651422522	0.012	1.30	0.25	-	100
	651	PeA	651502920	0.003	0.30	0.37	-	100
	651	PeB	651502922	0.008	0.80	0.38	-	100
	651	RbA	651542320	0.041	4.40	0.26	-	100
	651	TrB	651585522	0.009	1.00	0.13	-	100
TB35	651	Es	6512857	0.053	5.50	0.25	-	100
	651	Mo	6514449	0.003	0.30	0.39	-	100
	651	Mp	6514451	0.196	20.10	0.25	-	100
	651	Mr	6514455	0.470	48.20	0.05	-	100
	651	Vf	6516231	0.113	11.60	0.01	-	100
	651	GgA	651323320	0.079	8.10	0.25	-	100
	651	LcA	651422520	0.061	6.30	0.25	-	100
TB43	651	Bs	6512257	0.012	1.20	0.39	-	100
	651	Bt	6512259	0.004	0.40	0.25	-	100
	651	Es	6512857	0.005	0.50	0.25	-	100
	651	Lb	6514223	0.018	1.80	0.40	-	100
	651	Le	6514229	0.048	4.90	0.04	-	100
	651	Mp	6514451	0.014	1.40	0.25	-	100
	651	Mr	6514455	0.434	43.60	0.05	-	100
	651	Ta	6515821	0.011	1.10	0.25	-	100
	651	Tc	6515825	0.018	1.80	0.40	-	100
	651	Tg	6515833	0.062	6.20	0.04	-	100
	651	Th	6515835	0.003	0.30	0.04	-	100

Major Basin ID: GP

Area ID	Book Number	Map Unit	Soil ID	Area (sq mi)	Area (%)	XKSAT	Rock Percent (%)	Effective Rock (%)
TB43	651	Tw	6515865	0.043	4.30	0.05	-	100
	651	Vf	6516231	0.019	1.90	0.01	-	100
	651	GgA	651323320	0.047	4.70	0.25	-	100
	651	LcA	651422520	0.233	23.40	0.25	-	100
	651	LcB	651422522	0.024	2.40	0.25	-	100
TB51	651	Le	6514229	0.030	3.00	0.04	-	100
	651	Mp	6514451	0.056	5.70	0.25	-	100
	651	Mr	6514455	0.330	33.30	0.05	-	100
	651	Te	6515829	0.043	4.40	0.25	-	100
	651	Tg	6515833	0.002	0.20	0.04	-	100
	651	Tw	6515865	0.065	6.50	0.05	-	100
	651	Vf	6516231	0.024	2.40	0.01	-	100
	651	GgA	651323320	0.000	0.00	0.25	-	100
	651	LcA	651422520	0.417	42.10	0.25	-	100
	651	RbA	651542320	0.021	2.20	0.26	-	100
	651	TfB	651583122	0.003	0.30	0.36	-	100
TB59	651	Le	6514229	0.002	0.20	0.04	-	100
	651	Mp	6514451	0.171	17.20	0.25	-	100
	651	Mr	6514455	0.197	19.80	0.05	-	100
	651	Tu	6515861	0.021	2.10	0.25	-	100
	651	Tw	6515865	0.092	9.20	0.05	-	100
	651	Vf	6516231	0.031	3.10	0.01	-	100
	651	GxA	651326720	0.035	3.50	0.23	-	100
	651	LcA	651422520	0.392	39.40	0.25	-	100
	651	PeA	651502920	0.008	0.80	0.37	-	100
	651	RbA	651542320	0.047	4.70	0.26	-	100
TB99	651	Mr	6514455	0.220	22.60	0.05	-	100
	651	Th	6515835	0.003	0.30	0.04	-	100
	651	Vf	6516231	0.037	3.80	0.01	-	100
	651	LcA	651422520	0.672	68.90	0.25	-	100
	651	PeA	651502920	0.043	4.40	0.37	-	100
TBNR	651	Aa	6512021	0.199	17.70	0.26	-	100
	651	Ao	6512049	0.008	0.70	0.04	-	100
	651	Cb	6512423	0.069	6.10	0.40	-	100
	651	Gr	6513255	0.006	0.50	0.23	-	100
	651	Le	6514229	0.001	0.00	0.04	-	100
	651	Ma	6514421	0.002	0.20	0.40	-	100
	651	Mr	6514455	0.090	8.00	0.05	-	100
	651	TD	6515826	0.076	6.80	1.20	-	100
	651	Va	6516221	0.012	1.10	0.39	-	100
	651	Vf	6516231	0.005	0.40	0.01	-	100
	651	Vk	6516241	0.023	2.00	0.26	-	100
	651	CrB	651245522	0.011	1.00	0.40	-	100
	651	GgA	651323320	0.257	22.90	0.25	-	100
	651	LcA	651422520	0.122	10.80	0.25	-	100
	651	PeA	651502920	0.235	20.90	0.37	-	100
	651	RbA	651542320	0.011	0.90	0.26	-	100
TL07	651	Mr	6514455	0.007	1.20	0.05	-	100
	651	Tu	6515861	0.019	3.20	0.25	-	100
	651	Tw	6515865	0.030	5.20	0.05	-	100
	651	LcA	651422520	0.524	90.40	0.25	-	100
UH07	651	Lb	6514223	0.005	1.90	0.40	-	100
	651	Mp	6514451	0.012	4.70	0.25	-	100
	651	Mr	6514455	0.002	0.60	0.05	-	100
	651	Te	6515829	0.074	29.10	0.25	-	100
	651	LcA	651422520	0.130	51.50	0.25	-	100
	651	PeA	651502920	0.004	1.70	0.37	-	100
	651	RbA	651542320	0.026	10.50	0.26	-	100
UH15	651	Cb	6512423	0.051	5.00	0.40	-	100
	651	Ge	6513229	0.008	0.80	0.26	-	100
	651	Mo	6514449	0.005	0.50	0.39	-	100

Area ID	Book Number	Map Unit	Soil ID	Area (sq mi)	Area (%)	XKSAT	Rock Percent (%)	Effective Rock (%)
Major Basin ID: GP								
UH15	651	Mp	6514451	0.021	2.00	0.25	-	100
	651	Mr	6514455	0.336	33.00	0.05	-	100
	651	Te	6515829	0.095	9.40	0.25	-	100
	651	Tg	6515833	0.051	5.00	0.04	-	100
	651	Th	6515835	0.005	0.40	0.04	-	100
	651	Va	6516221	0.152	14.90	0.39	-	100
	651	CA2	65124202	0.044	4.40	0.38	-	100
	651	GgA	651323320	0.004	0.40	0.25	-	100
	651	GxA	651326720	0.003	0.30	0.23	-	100
	651	LcA	651422520	0.000	0.00	0.25	-	100
	651	LcB	651422522	0.014	1.40	0.25	-	100
	651	RbA	651542320	0.042	4.10	0.26	-	100
	651	RpE	651545128	0.046	4.50	0.29	-	100
	651	TfA	651583120	0.143	14.00	0.37	-	100
	651	TPB	651585022	0.000	0.00	0.12	-	100
UH35	651	Es	6512857	0.000	0.00	0.25	-	100
	651	Mp	6514451	0.055	4.90	0.25	-	100
	651	Mr	6514455	0.503	44.30	0.05	-	100
	651	Ms	6514457	0.041	3.60	0.01	-	100
	651	Tg	6515833	0.020	1.70	0.04	-	100
	651	Tw	6515865	0.085	7.50	0.05	-	100
	651	Vf	6516231	0.407	35.80	0.01	-	100
	651	LcA	651422520	0.013	1.10	0.25	-	100
	651	TrA	651585520	0.012	1.10	0.11	-	100
UH43	651	Ae	6512029	0.107	10.50	0.39	-	100
	651	Es	6512857	0.105	10.20	0.25	-	100
	651	Mr	6514455	0.300	29.20	0.05	-	100
	651	RS	6515456	0.044	4.30	0.40	65.00	100
	651	TD	6515826	0.004	0.40	1.20	-	100
	651	Tg	6515833	0.054	5.20	0.04	-	100
	651	Th	6515835	0.151	14.70	0.04	-	100
	651	Vf	6516231	0.079	7.70	0.01	-	100
	651	GgA	651323320	0.004	0.40	0.25	-	100
	651	GxB	651326722	0.032	3.10	0.24	-	100
	651	LcA	651422520	0.139	13.60	0.25	-	100
	651	RbA	651542320	0.007	0.70	0.26	-	100
UH51	651	Ae	6512029	0.174	17.60	0.39	-	100
	651	Bs	6512257	0.002	0.20	0.39	-	100
	651	Cb	6512423	0.010	1.00	0.40	-	100
	651	Es	6512857	0.076	7.70	0.25	-	100
	651	Ge	6513229	0.018	1.80	0.26	-	100
	651	Lb	6514223	0.003	0.30	0.40	-	100
	651	Ma	6514421	0.003	0.30	0.40	-	100
	651	Mp	6514451	0.115	11.70	0.25	-	100
	651	Mr	6514455	0.041	4.20	0.05	-	100
	651	Pa	6515021	0.001	0.10	0.40	-	100
	651	TD	6515826	0.068	6.90	1.20	-	100
	651	Th	6515835	0.005	0.50	0.04	-	100
	651	Tu	6515861	0.007	0.70	0.25	-	100
	651	Vf	6516231	0.009	0.90	0.01	-	100
	651	AbA	651202320	0.053	5.30	0.38	-	100
	651	AdA	651202720	0.015	1.50	0.40	-	100
	651	GgA	651323320	0.029	3.00	0.25	-	100
	651	LcA	651422520	0.248	25.10	0.25	-	100
	651	PeB	651502922	0.001	0.10	0.38	-	100
	651	RbA	651542320	0.077	7.70	0.26	-	100
	651	RbB	651542322	0.034	3.50	0.25	-	100
UH67	651	Cp	6512451	0.010	1.30	0.40	-	100
	651	Es	6512857	0.015	1.90	0.25	-	100
	651	Le	6514229	0.088	11.20	0.04	-	100
	651	Mp	6514451	0.000	0.00	0.25	-	100
	651	Mr	6514455	0.133	17.00	0.05	-	100

Area ID	Book Number	Map Unit	Soil ID	Area (sq mi)	Area (%)	XKSAT	Rock Percent (%)	Effective Rock (%)
Major Basin ID: GP								
UH67	651	TD	6515826	0.159	20.30	1.20	-	100
	651	Te	6515829	0.043	5.50	0.25	-	100
	651	Tg	6515833	0.012	1.50	0.04	-	100
	651	Th	6515835	0.004	0.50	0.04	-	100
	651	Tw	6515865	0.071	9.00	0.05	-	100
	651	Vf	6516231	0.027	3.40	0.01	-	100
	651	CrB	651245522	0.007	0.80	0.40	-	100
	651	GgA	651323320	0.000	0.00	0.25	-	100
	651	GxA	651326720	0.033	4.20	0.23	-	100
	651	LcA	651422520	0.118	15.00	0.25	-	100
	651	PeA	651502920	0.013	1.70	0.37	-	100
	651	RbA	651542320	0.029	3.70	0.26	-	100
	651	TrA	651585520	0.006	0.80	0.11	-	100
	651	TrB	651585522	0.016	2.00	0.13	-	100
UH75	651	W	65164	0.006	0.70	0.00	-	100
	651	Cp	6512451	0.021	2.50	0.40	-	100
	651	Es	6512857	0.002	0.20	0.25	-	100
	651	Mp	6514451	0.072	8.80	0.25	-	100
	651	Mr	6514455	0.423	52.00	0.05	-	100
	651	Tu	6515861	0.052	6.40	0.25	-	100
	651	Tw	6515865	0.030	3.60	0.05	-	100
	651	Vf	6516231	0.043	5.30	0.01	-	100
	651	GxA	651326720	0.050	6.10	0.23	-	100
	651	LcA	651422520	0.104	12.80	0.25	-	100
	651	PeA	651502920	0.012	1.40	0.37	-	100
UH87	651	Mp	6514451	0.031	3.10	0.25	-	100
	651	Mr	6514455	0.693	69.40	0.05	-	100
	651	Tg	6515833	0.002	0.20	0.04	-	100
	651	Th	6515835	0.018	1.80	0.04	-	100
	651	Vf	6516231	0.011	1.10	0.01	-	100
	651	GxA	651326720	0.050	5.00	0.23	-	100
	651	LcA	651422520	0.194	19.40	0.25	-	100
UH91	651	Mp	6514451	0.182	19.60	0.25	-	100
	651	Mr	6514455	0.008	0.80	0.05	-	100
	651	PT	6515058	0.006	0.60	0.40	-	100
	651	GxA	651326720	0.018	2.00	0.23	-	100
	651	LcA	651422520	0.660	71.10	0.25	-	100
	651	PsA	651505720	0.018	1.90	0.25	-	100
	651	RbA	651542320	0.024	2.60	0.26	-	100
	651	TfA	651583120	0.013	1.40	0.37	-	100
UH97	651	Mp	6514451	0.001	0.20	0.25	-	100
	651	Mr	6514455	0.051	18.70	0.05	-	100
	651	GxA	651326720	0.028	10.30	0.23	-	100
	651	LcA	651422520	0.124	45.60	0.25	-	100
	651	PsA	651505720	0.003	1.20	0.25	-	100
	651	RbA	651542320	0.054	20.00	0.26	-	100
	651	TfA	651583120	0.000	0.00	0.37	-	100
	651	TrA	651585520	0.011	3.90	0.11	-	100
	651	TrB	651585522	0.000	0.10	0.13	-	100
UH99	651	Lb	6514223	0.013	2.30	0.40	-	100
	651	Le	6514229	0.000	0.00	0.04	-	100
	651	Mp	6514451	0.050	8.90	0.25	-	100
	651	Mr	6514455	0.214	38.00	0.05	-	100
	651	Vf	6516231	0.049	8.70	0.01	-	100
	651	GxA	651326720	0.001	0.20	0.23	-	100
	651	LcA	651422520	0.211	37.40	0.25	-	100
	651	PeA	651502920	0.003	0.60	0.37	-	100
	651	TrA	651585520	0.015	2.70	0.11	-	100
	651	TrB	651585522	0.007	1.20	0.13	-	100
UHAF	651	Br	6512255	0.045	9.20	1.05	-	100
	651	Cb	6512423	0.255	52.20	0.40	-	100
	651	Ge	6513229	0.021	4.30	0.26	-	100

Major Basin ID: GP

Area ID	Book Number	Map Unit	Soil ID	Area (sq mi)	Area (%)	XKSAT	Rock Percent (%)	Effective Rock (%)
UHAF	651	TD	6515826	0.057	11.70	1.20	-	100
	651	Va	6516221	0.000	0.00	0.39	-	100
	651	Vg	6516233	0.076	15.50	0.91	-	100
	651	Vh	6516235	0.035	7.20	0.27	-	100
UHLO	651	Es	6512857	0.002	0.20	0.25	-	100
	651	Le	6514229	0.017	2.10	0.04	-	100
	651	Mp	6514451	0.028	3.40	0.25	-	100
	651	Mr	6514455	0.285	34.70	0.05	-	100
	651	Te	6515829	0.000	0.00	0.25	-	100
	651	Ve	6516229	0.002	0.20	0.25	-	100
	651	Vf	6516231	0.016	1.90	0.01	-	100
	651	AfA	651203120	0.366	44.60	0.38	-	100
	651	LcA	651422520	0.084	10.30	0.25	-	100
	651	RbA	651542320	0.021	2.60	0.26	-	100
UHNR	651	Cb	6512423	0.069	18.00	0.40	-	100
	651	Le	6514229	0.009	2.40	0.04	-	100
	651	Mr	6514455	0.079	20.50	0.05	-	100
	651	TD	6515826	0.067	17.40	1.20	-	100
	651	Tg	6515833	0.005	1.20	0.04	-	100
	651	Vh	6516235	0.029	7.60	0.27	-	100
	651	AfA	651203120	0.119	30.80	0.38	-	100
	651	GgA	651323320	0.008	2.10	0.25	-	100
UHSK	651	Aa	6512021	0.046	4.90	0.26	-	100
	651	Bs	6512257	0.040	4.30	0.39	-	100
	651	Bt	6512259	0.019	2.00	0.25	-	100
	651	Cb	6512423	0.028	2.90	0.40	-	100
	651	Cp	6512451	0.027	2.90	0.40	-	100
	651	Ge	6513229	0.109	11.70	0.26	-	100
	651	Lb	6514223	0.032	3.40	0.40	-	100
	651	Le	6514229	0.002	0.20	0.04	-	100
	651	Ma	6514421	0.022	2.40	0.40	-	100
	651	Mp	6514451	0.022	2.30	0.25	-	100
	651	Mr	6514455	0.013	1.40	0.05	-	100
	651	Pa	6515021	0.008	0.90	0.40	-	100
	651	Tc	6515825	0.013	1.40	0.40	-	100
	651	TD	6515826	0.053	5.70	1.20	-	100
	651	Te	6515829	0.031	3.30	0.25	-	100
	651	Th	6515835	0.016	1.70	0.04	-	100
	651	Vf	6516231	0.063	6.70	0.01	-	100
	651	Vh	6516235	0.054	5.80	0.27	-	100
	651	AdB	651202722	0.004	0.40	0.40	-	100
	651	CrB	651245522	0.020	2.10	0.40	-	100
	651	GgA	651323320	0.114	12.20	0.25	-	100
	651	LcA	651422520	0.181	19.30	0.25	-	100
	651	PeA	651502920	0.004	0.40	0.37	-	100
	651	PeB	651502922	0.008	0.80	0.38	-	100
	651	TfA	651583120	0.009	0.90	0.37	-	100
WL59	651	Ae	6512029	0.010	1.70	0.39	-	100
	651	CO	6512448	0.208	37.10	0.29	20.00	100
	651	RS	6515456	0.107	19.00	0.40	65.00	100
	651	AfA	651203120	0.027	4.70	0.38	-	100
	651	EbD	651282326	0.090	15.90	0.10	-	100
	651	GxB	651326722	0.020	3.50	0.24	-	100
	651	LcA	651422520	0.074	13.20	0.25	-	100
	651	LcB	651422522	0.021	3.80	0.25	-	100
	651	PeA	651502920	0.007	1.20	0.37	-	100
WL67	651	CO	6512448	0.013	12.50	0.29	20.00	100
	651	LcA	651422520	0.091	87.40	0.25	-	100
	651	PsB	651505722	0.000	0.10	0.26	-	100
WL75	651	Cb	6512423	0.004	0.80	0.40	-	100
	651	CO	6512448	0.002	0.40	0.29	20.00	100

Major Basin ID: GP

Area ID	Book Number	Map Unit	Soil ID	Area (sq mi)	Area (%)	XKSAT	Rock Percent (%)	Effective Rock (%)
WL75	651	Ge	6513229	0.005	1.10	0.26	-	100
	651	GN	6513246	0.053	11.10	0.25	-	100
	651	Lb	6514223	0.003	0.70	0.40	-	100
	651	Vh	6516235	0.007	1.40	0.27	-	100
	651	AGB	651203222	0.018	3.80	0.40	-	100
	651	EbD	651282326	0.004	0.80	0.10	-	100
	651	GgA	651323320	0.101	21.20	0.25	-	100
	651	LcA	651422520	0.260	54.70	0.25	-	100
	651	PeA	651502920	0.001	0.30	0.37	-	100
	651	PRB	651505422	0.015	3.10	0.28	-	100
	651	PsB	651505722	0.004	0.80	0.26	-	100
WL83	651	GN	6513246	0.018	14.50	0.25	-	100
	651	Mr	6514455	0.000	0.10	0.05	-	100
	651	Vf	6516231	0.107	85.40	0.01	-	100
WLNR	651	Aa	6512021	0.019	4.80	0.26	-	100
	651	Bs	6512257	0.015	3.80	0.39	-	100
	651	Cb	6512423	0.003	0.80	0.40	-	100
	651	Ge	6513229	0.005	1.20	0.26	-	100
	651	GN	6513246	0.095	24.30	0.25	-	100
	651	TD	6515826	0.034	8.70	1.20	-	100
	651	Vf	6516231	0.041	10.50	0.01	-	100
	651	AfA	651203120	0.020	5.20	0.38	-	100
	651	AGB	651203222	0.159	40.70	0.40	-	100
	651	GgA	651323320	0.000	0.00	0.25	-	100
WWBR	645	13	64513	0.026	14.30	0.01	-	100
	645	100	645100	0.018	9.50	0.40	20.00	100
	645	110	645110	0.137	74.20	0.13	-	100
	645	112	645112	0.004	2.00	0.39	-	100
WWLP	645	13	64513	0.026	19.30	0.01	-	100
	645	100	645100	0.023	17.20	0.40	20.00	100
	645	110	645110	0.086	63.50	0.13	-	100
WWRS	645	18	64518	0.091	63.30	0.33	15.00	100
	645	21	64521	0.007	4.70	0.38	-	100
	645	110	645110	0.004	2.60	0.13	-	100
	645	112	645112	0.039	26.80	0.39	-	100
	651	CO	6512448	0.004	2.60	0.29	20.00	100
YLLP	651	CO	6512448	0.228	38.30	0.29	20.00	100
	651	CV	6512462	0.030	5.00	0.39	-	100
	651	PT	6515058	0.049	8.20	0.40	-	100
	651	RS	6515456	0.045	7.60	0.40	65.00	100
	651	GWD	651326426	0.157	26.40	0.35	-	100
	651	GYD	651326826	0.025	4.20	0.26	-	100
	651	PWB	651506422	0.062	10.40	0.38	-	100

Appendix C Land Use Data

Comparison of Glendale and Phoenix Land Use with MAG

DDMSW Land Use Defaults

Land Use Parameters Documentation

City of Phoenix Land Use Associated with MAG Land Use

City of Phoenix Land Use Description	MAG Code	MAG Land Use Description
Residential 0 to 2 du / acre	120	Estate Residential (1/5 du per acre to 1 du per acre)
Residential 1 to 2 du / acre	130	Large Lot Residential (1-2 du per acre)
Residential 2 to 3.5 du / acre	140	Medium Lot Residential - Single Family (2-4 du per acre)
Residential 3.5 to 5 du / acre	150	Small Lot Residential - Single Family (4-6 du per acre)
Residential 5 to 10 du / acre	170	Medium Density Residential - Multi Family (5-10 du per acre)
Residential 5 to 15 du / acre	180	High Density Residential - Multi Family (10-15 du per acre)
Residential 10 to 15 du / acre	190	Very High Density Residential - Multi Family (>15 du per acre)
Residential 15+ du / acre	190	Very High Density Residential - Multi Family (>15 du per acre)
Commercial	200	General Commercial
Industrial	320	Industrial
Commerce / Business Park	810	Business Park (enlcosed industrial, office or retail)
Public / Quasi-Public	520	Educational (Schools)
Transportartion	610	Transportation (railways, transit centers, freeways)
Airport	620	Airports (includes public use airports)
Parks / Open Space-Public		Varied, based on aerial orthophotography
Parks / Open Space-Private	720	Golf Courses
Parks / Open Space - Future 1 du	730	Passive Open Space (Includes mountain preserves and washes)
MU (Commercial / Commerce- Business Park)	200	General Commercial
Preserves / 0-1 & 1-2 du / acre	730	Passive Open Space (Includes mountain preserves and washes)
Preserves / Water	730	Passive Open Space (Includes mountain preserves and washes)

City of Glendale and the FCDMC
Drainage Design Management System
LAND USE DEFAULTS
Project Reference: GLENDALE SMP-GP6EC

Code	Description	Initial Abstraction IA	Percent Impervious RTIMP	Vegetation Cover	Moisture Deficit DTHETA	Resistance Coefficient Kb
Agriculture						
750	Agriculture	0.50	-	85.0	ORMAL	LOW
Commercial						
200	General Commercial (Commercial where no detail available)	0.10	80	5.0	ORMAL	MIN
220	Neighborhood Commercial (50,000 to 100,000 sq. ft.)	0.10	75	10.0	ORMAL	MIN
230	Community Commercial (100,000 to 500,000 sq. ft.)	0.10	85	5.0	ORMAL	MIN
240	Regional Commercial (500,000 to 1,000,000 sq. ft.)	0.10	85	5.0	ORMAL	MIN
250	Super-Regional Commercial (>= 1,000,000 sq. ft.)	0.10	85	0.0	ORMAL	MIN
Industrial						
320	Industrial	0.15	80	0.0	ORMAL	MIN
Institutional						
500	Educational (Universities)	0.29	45	30.0	ORMAL	MIN
520	Educational (Schools)	0.29	40	40.0	ORMAL	MIN
530	Institutional (Includes hospitals and churches)	0.10	80	5.0	ORMAL	HI
550	Public Facilities (comm centers, libraries, etc)	0.10	80	10.0	ORMAL	MIN
555	Public Facilities (sub-stations)	0.10	5	0.0	DRY	MIN
Office						
400	Office General (Office where no detail available)	0.10	80	5.0	ORMAL	HI
810	Business Park (enclosed industrial, office or retail)	0.10	80	5.0	ORMAL	HI
Open Space						
710	Active Open Space (Includes parks)	0.10	5	80.0	ORMAL	MIN
720	Golf courses	0.10	5	90.0	ORMAL	MIN
730	Passive Open Space (Includes mountain preserves and washes)	0.10	-	5.0	DRY	HI
740	Water	0.00	-	0.0	WET	MIN
900	Vacant (Existing land use database only)	0.30	-	5.0	DRY	LOW
950	Vacant (Graded Land)	0.30	-	5.0	DRY	LOW
Residential						
120	Estate Residential (1/5 du per acre to 1 du per acre)	0.30	5	50.0	ORMAL	HI
130	Large Lot Residential - Single Family (1-2 du per acre)	0.30	15	30.0	ORMAL	HI
140	Medium Lot Residential - Single Family (2-4 du per acre)	0.25	30	15.0	ORMAL	HI
150	Small Lot Residential - Single Family (4-6 du per acre)	0.25	30	15.0	ORMAL	HI
170	Medium Density Residential - Muli Family (5-10 du per acre)	0.25	45	10.0	ORMAL	HI
180	High Density Residential - Multi Family (10-15 du per acre)	0.25	45	5.0	ORMAL	HI
190	Very High Density Residential - Multi Family (>15 du per ac)	0.25	45	5.0	ORMAL	HI
Transportation						
610	Transportation (railways, transit centers, freeways)	0.10	80	5.0	ORMAL	MIN
620	Airports (Includes public use airports)	0.15	55	5.0	ORMAL	MIN

Vegetative Cover and Runoff Coefficients per Land Use Type

LU 120: Estate Residential
Vegetative Cover: 50%
RTIMP: 5%

LU 130: Large Lot Residential
Vegetative Cover: 30%
RTIMP: 15%

LU 140: Medium Lot Residential
Vegetative Cover: 15%
RTIMP: 30%

LU 150: Small Lot Residential
Vegetative Cover: 15%
RTIMP: 30%

LU 170: Medium High Density Residential
Vegetative Cover: 10%
RTIMP: 45%

LU 180: High Density Residential
Vegetative Cover: 5%
RTIMP: 45%

LU 190: Very High Density Residential
Vegetative Cover: 5%
RTIMP: 45%

LU 200: General Commercial
Vegetative Cover: 5%
RTIMP: 80%

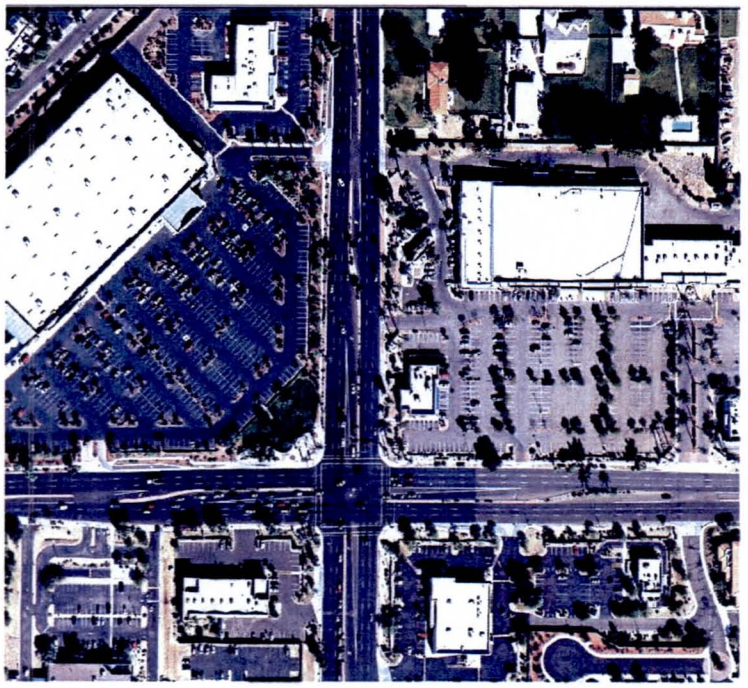

LU 220: Neighborhood Commercial (mixed use)
Vegetative Cover: 10%
RTIMP: 75%

LU 230: Community Commercial
Vegetative Cover: 5%
RTIMP: 85%

LU 240: Regional Commercial
Vegetative Cover: 5%
RTIMP: 85%

LU 250: Super-Regional Commercial (mixed use)
Vegetative Cover: 0%
RTIMP: 85%

LU 320: Industrial
Vegetative Cover: 0%
RTIMP: 80%

LU 400: Office
Vegetative Cover: 5%
RTIMP:80%

LU 500: Educational (universities)
Vegetative Cover: 30%
RTIMP: 45%

LU 520: Educational (schools)
Vegetative Cover: 40%
RTIMP: 40%

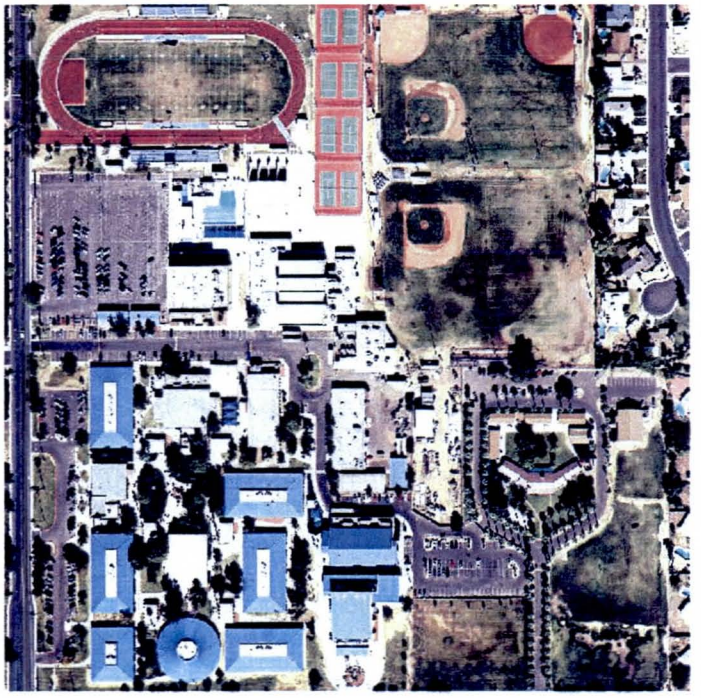

LU 530: Institutional
Vegetative Cover: 5%
RTIMP: 80%

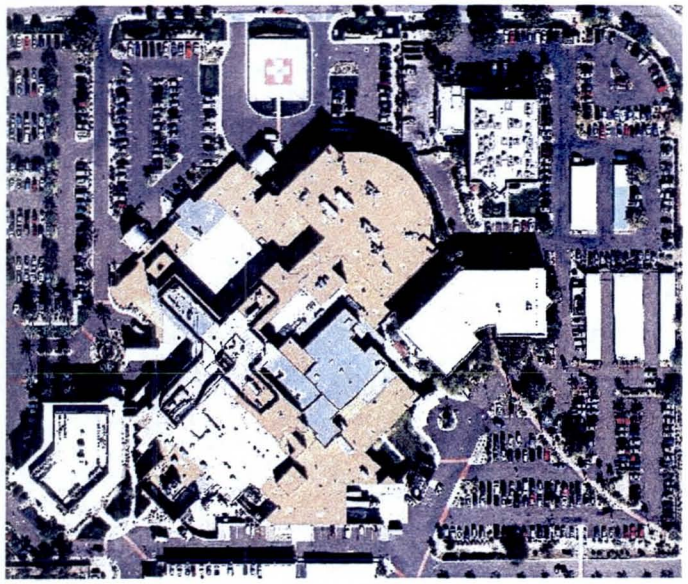

LU 550: Public Facility (community buildings)
Vegetative Cover: 10%
RTIMP: 80%

LU 555: Public Facility (substations)
Vegetative Cover: 0%
RTIMP: 5%

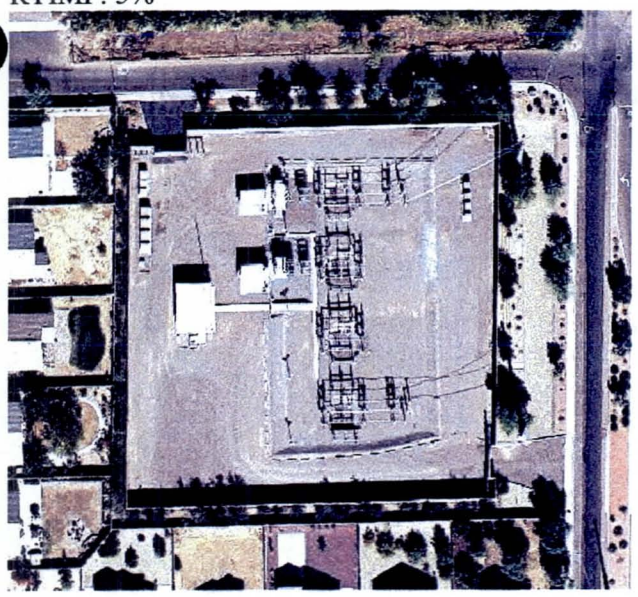

LU 610: Transportation
Vegetative Cover: 5%
RTIMP: 80%

LU 620: Airports (public facility)
Vegetative Cover: 5%
RTIMP: 55%

LU 710: Parks and Open Space (active)
Vegetative Cover: 80%
RTIMP: 5%

LU 720: Golf Courses
Vegetative Cover: 90%
RTIMP: 5%

LU 730: Open Space (passive)
Vegetative Cover: 5%
RTIMP: 0%

LU 750: Agriculture
Vegetative Cover: 85%
RTIMP: 0%

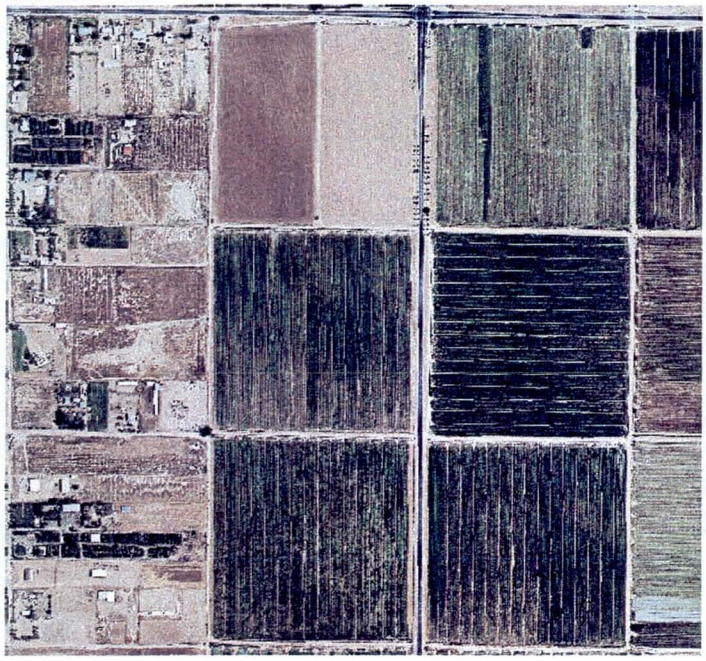

LU 810: Business Park (Business/Commerce Center)
Vegetative Cover: 5%
RTIMP: 80%

LU 900: Vacant
Vegetative Cover: 5%
RTIMP: 0%

LU 950: Vacant (Graded Land)
Vegetative Cover: 5%
RTIMP: 0%

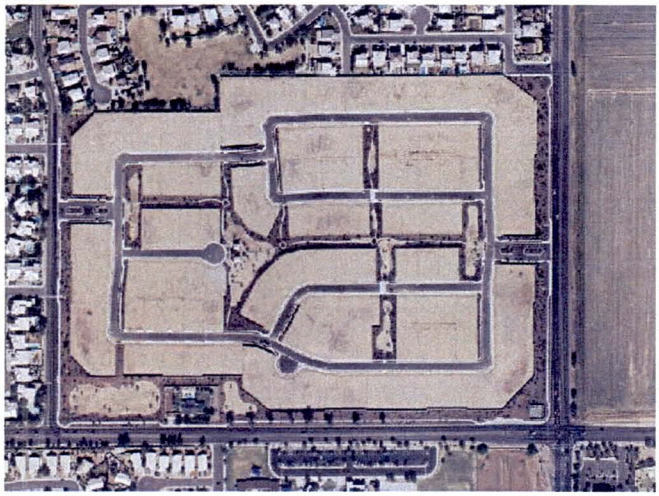

Appendix D Retention Calculations

Maryvale ADMS Area Calculations

Glendale/Peoria ADMPU Area Calcuations

Kimley-Horn and Associates, Inc.

Project: ***Glendale Stormwater Management Plan***
Subject: **100-year, 2-hour Volumes of Existing Post 1990 Developed Areas**
Model: **Maryvale**
Designed by: **LAT** Date 11/4/2009 KHA Project No. 091910009
Checked by: **MAF** Date 11/9/2009 City of Glendale No. 089017

Objective: To determine the 100-year, 2-hour required retention volume for areas developed after 1990.

Subbasin ID	Divert ID	Weighted "C" Factor[1]	Retention Area[2] (ac)	Precipitation[3] (in)	Required Volume[4] (ac-ft)	Reduced Volume[5] (ac-ft)
TB75	ERTB75	0.78	62.5	2.70	10.9	8.7
TB83	ERTB83	0.68	157.7	2.70	24.2	19.4
TBLO	ERTBLO	0.95	63.3	2.70	13.5	10.8
CT59	ERCT59	0.81	168.8	2.70	30.7	24.6
CT67	ERCT67	0.72	162.3	2.70	26.2	20.9
CT75	ERCT75	0.71	186.0	2.70	29.6	23.7
CT83	ERCT83	0.71	227.1	2.70	36.0	28.8
CTLO	ERCTLO	0.79	325.1	2.70	57.5	46.0
PE59	ERPE59	0.81	59.2	2.70	10.8	8.6
PE67	ERPE67	0.85	362.1	2.70	69.3	55.4
PE75	ERPE75	0.72	72.3	2.70	11.7	9.4
PE83	ERPE83	0.83	232.3	2.70	43.2	34.6
PE91	ERPE91	0.76	96.0	2.70	16.4	13.1
PELO	ERPELO	0.75	61.5	2.70	10.4	8.3
OL51	EROL51	0.94	35.6	2.70	7.6	6.0
OL59	EROL59	0.76	160.3	2.70	27.4	21.9
OL67	EROL67	0.84	263.5	2.70	49.7	39.8
OL75	EROL75	0.74	304.1	2.70	50.5	40.4
OL83	EROL83	0.81	95.5	2.70	17.4	13.9
OL91	EROL91	0.75	334.1	2.70	56.2	44.9
OLLO	EROLLO	0.95	66.5	2.70	14.2	11.4
NO59	ERNO59	0.85	108.6	2.70	20.7	16.5
NO67	ERNO67	0.94	233.4	2.70	49.3	39.4
NO75	ERNO75	0.92	40.0	2.70	8.3	6.6
NO83	ERNO83	0.93	131.9	2.70	27.7	22.2
NO91	ERNO91	0.71	276.2	2.70	43.9	35.1
NOLO	ERNOLO	0.95	116.5	2.70	24.9	19.9
OW75	EROW75	0.89	119.1	2.70	23.9	19.1
OW83	EROW83	0.69	69.6	2.70	10.8	8.7
GL59	ERGL59	0.81	151.3	2.70	27.6	22.1
GL75	ERGL75	0.91	234.6	2.70	48.1	38.5
GL83	ERGL83	0.74	122.2	2.70	20.4	16.3
GL91	ERGL91	0.69	418.1	2.70	64.5	51.6
GLLO	ERGLLO	0.95	102.5	2.70	21.9	17.5
GLNR	ERGLNR	0.95	16.8	2.70	3.6	2.9
BH75	ERBH75	0.83	401.7	2.70	75.2	60.1
BH83	ERBH83	0.73	435.3	2.70	71.3	57.0
BH91	ERBH91	0.66	31.9	2.70	4.7	3.8
BHLO	ERBHLO	0.95	242.8	2.70	51.9	41.5
CB59	ERCB59	0.94	17.2	2.70	3.6	2.9
CB67	ERCB67	0.75	13.4	2.70	2.2	1.8
CB75	ERCB75	0.84	153.5	2.70	29.0	23.2
CB83	ERCB83	0.70	143.1	2.70	22.5	18.0
CB91	ERCB91	0.64	141.4	2.70	20.5	16.4

Kimley-Horn and Associates, Inc.

Project: ***Glendale Stormwater Management Plan***
Subject: **100-year, 2-hour Volumes of Existing Post 1990 Developed Areas**
Model: **Maryvale**
Designed by: **LAT** Date 11/4/2009 KHA Project No. 091910009
Checked by: **MAF** Date 11/9/2009 City of Glendale No. 089017

Objective: To determine the 100-year, 2-hour required retention volume for areas developed after 1990.

Subbasin ID	Divert ID	Weighted "C" Factor[1]	Retention Area[2] (ac)	Precipitation[3] (in)	Required Volume[4] (ac-ft)	Reduced Volume[5] (ac-ft)
CBLO	ERCBLO	0.77	94.0	2.70	16.3	13.0
CB99	ERCB99	0.91	28.0	2.70	5.8	4.6
CBRI	ERCBRI	0.84	273.9	2.70	51.7	41.4
IS51	ERIS51	0.95	215.2	2.70	45.8	36.7
IS75	ERIS75	0.83	5.5	2.70	1.0	0.8
IS91	ERIS91	0.91	148.6	2.70	30.4	24.3
ISLO	ERISLO	0.80	206.9	2.70	37.3	29.8
IS07	ERIS07	0.87	66.9	2.70	13.1	10.5
GR43	ERGR43	0.74	18.2	2.70	3.0	2.4
GR67	ERGR67	0.36	14.9	2.70	1.2	1.0
GR75	ERGR75	0.93	107.6	2.70	22.6	18.0
GR83	ERGR83	0.83	198.3	2.70	37.1	29.7
GR91	ERGR91	0.75	189.1	2.70	31.9	25.5
GC83	ERGC83	0.67	230.7	2.70	35.0	28.0
TM43	ERTM43	0.80	11.6	2.70	2.1	1.7
TM67	ERTM67	0.95	6.2	2.70	1.3	1.1
TM75	ERTM75	0.95	5.1	2.70	1.1	0.9
TM91	ERTM91	0.88	93.0	2.70	18.4	14.8
TMLO	ERTMLO	0.95	2.1	2.70	0.4	0.4
RI07	ERRI07	0.74	158.2	2.70	26.4	21.1
MD67	ERMD67	0.59	109.9	2.70	14.5	11.6
MD75	ERMD75	0.95	39.1	2.70	8.4	6.7
MD83	ERMD83	0.81	197.2	2.70	36.1	28.9
MD91	ERMD91	0.83	143.7	2.70	26.7	21.4
MDLO	ERMDLO	0.87	360.5	2.70	70.3	56.3
MD07	ERMD07	0.80	344.4	2.70	62.3	49.9
MDAV	ERMDAV	0.76	553.3	2.70	94.5	75.6
IN67	ERIN67	0.94	53.6	2.70	11.3	9.1
IN75	ERIN75	0.94	16.4	2.70	3.5	2.8
IN83	ERIN83	0.94	71.9	2.70	15.3	12.2
INLO	ERINLO	0.95	1.9	2.70	0.4	0.3
IN07	ERIN07	0.95	47.5	2.70	10.1	8.1
INAV	ERINAV	0.94	21.2	2.70	4.5	3.6
INAF	ERINAF	0.94	49.9	2.70	10.5	8.4

Notes:

1. Determined according to land use using "C" values from Table 6.3 in the Maricopa County Drainage Policies and Standards Manual, September 2009.
2. The area within the subbasin that was developed after 1990.
3. The 100-year 2-hour precipitation value obtained from NOAA Atlas 2 isopluvial maps.
4. The 100-year, 2-hour required volume, calculated as Weighted "C" Value x Area x Precipitation / 12.
5. A 20% reduction is applied to the required volume resulting in 80% of the required capacity. This volume is diverted out of the model.

Kimley-Horn and Associates, Inc.

Project: ***Glendale Stormwater Management Plan***
Subject: **100-year, 2-hour Volumes of Future and Existing Post-1990 Developed Areas**
Model: **Maryvale**
Designed by: **LAT** Date 11/4/2009 KHA Project No. 091910009
Checked by: **MAF** Date 11/9/2009 City of Glendale No. 089017

Objective: To determine the 100-year, 2-hour required retention volume for future development areas.

Subbasin ID	Divert ID	Weighted "C" Factor[1]	Retention Area[2] (ac)	Precipitation[3] (in)	Required Volume[4] (ac-ft)	Reduced Volume[5] (ac-ft)	Retention Volume[6] (ac-ft)
TB75	ERTB75	0.74	8.3	2.30	1.2	0.9	9.7
TB83	ERTB83	0.53	0.0	2.30	0.0	0.0	19.4
TBLO	ERTBLO	0.00	0.0	2.30	0.0	0.0	10.8
CT59	ERCT59	0.00	0.0	2.30	0.0	0.0	24.6
CT67	ERCT67	0.60	64.0	2.30	7.4	5.9	26.8
CT75	ERCT75	0.75	48.3	2.30	7.0	5.6	29.2
CT83	ERCT83	0.00	0.0	2.30	0.0	0.0	28.8
CTLO	ERCTLO	0.00	0.0	2.30	0.0	0.0	46.0
PE59	ERPE59	0.00	0.0	2.30	0.0	0.0	8.6
PE67	ERPE67	0.93	5.4	2.30	1.0	0.8	56.2
PE75	ERPE75	0.95	0.2	2.30	0.0	0.0	9.4
PE83	ERPE83	0.94	15.5	2.30	2.8	2.2	36.8
PE91	ERPE91	0.00	0.0	2.30	0.0	0.0	13.1
PELO	ERPELO	0.71	7.4	2.30	1.0	0.8	9.1
OL51	EROL51	0.00	0.0	2.30	0.0	0.0	6.0
OL59	EROL59	0.00	0.0	2.30	0.0	0.0	21.9
OL67	EROL67	0.00	0.0	2.30	0.0	0.0	39.8
OL75	EROL75	0.82	4.3	2.30	0.7	0.5	40.9
OL83	EROL83	0.91	163.4	2.30	28.5	22.8	36.7
OL91	EROL91	0.95	19.2	2.30	3.5	2.8	47.7
OLLO	EROLLO	0.00	0.0	2.30	0.0	0.0	11.4
NO59	ERNO59	0.95	39.9	2.30	7.3	5.8	22.4
NO67	ERNO67	0.94	103.2	2.30	18.6	14.9	54.3
NO75	ERNO75	0.94	89.2	2.30	16.1	12.9	19.5
NO83	ERNO83	0.95	362.3	2.30	65.7	52.5	74.7
NO91	ERNO91	0.76	161.8	2.30	23.5	18.8	53.9
NOLO	ERNOLO	0.84	0.1	2.30	0.0	0.0	19.9
OW75	EROW75	0.88	69.5	2.30	11.7	9.4	28.5
OW83	EROW83	0.88	57.9	2.30	9.8	7.8	16.5
GL59	ERGL59	0.94	1.6	2.30	0.3	0.2	22.3
GL75	ERGL75	0.94	25.8	2.30	4.6	3.7	42.2
GL83	ERGL83	0.60	19.6	2.30	2.3	1.8	18.1
GL91	ERGL91	0.80	111.0	2.30	17.0	13.6	65.2
GLLO	ERGLLO	0.95	398.5	2.30	72.5	58.0	75.5
GLNR	ERGLNR	0.95	197.2	2.30	35.9	28.7	31.6
BH75	ERBH75	0.89	71.5	2.30	12.2	9.8	69.9
BH83	ERBH83	0.84	41.8	2.30	6.7	5.4	62.4
BH91	ERBH91	0.83	105.2	2.30	16.8	13.5	17.3
BHLO	ERBHLO	0.91	0.2	2.30	0.0	0.0	41.5
CB59	ERCB59	0.95	93.8	2.30	17.1	13.7	16.6
CB67	ERCB67	0.94	10.0	2.30	1.8	1.4	3.2
CB75	ERCB75	0.82	14.6	2.30	2.3	1.8	25.1

Kimley-Horn and Associates, Inc.

Project: ***Glendale Stormwater Management Plan***
Subject: **100-year, 2-hour Volumes of Future and Existing Post-1990 Developed Areas**
Model: **Maryvale**
Designed by: **LAT** Date 11/4/2009 KHA Project No. 091910009
Checked by: **MAF** Date 11/9/2009 City of Glendale No. 089017

Objective: To determine the 100-year, 2-hour required retention volume for future development areas.

Subbasin ID	Divert ID	Weighted "C" Factor[1]	Retention Area[2] (ac)	Precipitation[3] (in)	Required Volume[4] (ac-ft)	Reduced Volume[5] (ac-ft)	Retention Volume[6] (ac-ft)
CB83	ERCB83	0.60	0.0	2.30	0.0	0.0	18.0
CB91	ERCB91	0.70	461.8	2.30	62.0	49.6	66.1
CBLO	ERCBLO	0.91	301.5	2.30	52.6	42.1	55.1
CB99	ERCB99	0.95	71.6	2.30	13.0	10.4	15.0
CBRI	ERCBRI	0.90	163.6	2.30	28.4	22.7	64.0
IS51	ERIS51	0.95	91.1	2.30	16.6	13.3	49.9
IS75	ERIS75	0.82	0.0	2.30	0.0	0.0	0.8
IS91	ERIS91	0.76	2.5	2.30	0.4	0.3	24.6
ISLO	ERISLO	0.95	193.6	2.30	35.2	28.2	58.0
IS07	ERIS07	0.90	49.8	2.30	8.6	6.9	17.4
GR43	ERGR43	0.95	28.7	2.30	5.2	4.2	6.6
GR67	ERGR67	0.94	1.9	2.30	0.3	0.3	1.2
GR75	ERGR75	0.89	95.1	2.30	16.3	13.0	31.1
GR83	ERGR83	0.95	18.7	2.30	3.4	2.7	32.4
GR91	ERGR91	0.74	26.8	2.30	3.8	3.1	28.6
GC83	ERGC83	0.84	24.9	2.30	4.0	3.2	31.2
TM43	ERTM43	0.00	0.0	2.30	0.0	0.0	1.7
TM67	ERTM67	0.00	0.0	2.30	0.0	0.0	1.1
TM75	ERTM75	0.82	8.8	2.30	1.4	1.1	2.0
TM91	ERTM91	0.95	0.2	2.30	0.0	0.0	14.8
TMLO	ERTMLO	0.95	267.6	2.30	48.7	39.0	39.3
RI07	ERRI07	0.89	323.7	2.30	55.5	44.4	65.5
MD67	ERMD67	0.95	6.2	2.30	1.1	0.9	12.5
MD75	ERMD75	0.95	18.6	2.30	3.4	2.7	9.4
MD83	ERMD83	0.95	181.0	2.30	32.9	26.3	55.2
MD91	ERMD91	0.95	30.1	2.30	5.5	4.4	25.7
MDLO	ERMDLO	0.89	34.4	2.30	5.9	4.7	60.9
MD07	ERMD07	0.92	27.1	2.30	4.8	3.8	53.7
MDAV	ERMDAV	0.76	44.9	2.30	6.6	5.3	80.8
IN67	ERIN67	0.94	6.7	2.30	1.2	1.0	10.0
IN75	ERIN75	0.95	13.5	2.30	2.5	2.0	4.7
IN83	ERIN83	0.00	0.0	2.30	0.0	0.0	12.2
INLO	ERINLO	0.95	44.7	2.30	8.1	6.5	6.8
IN07	ERIN07	0.95	65.1	2.30	11.9	9.5	17.6
INAV	ERINAV	0.95	82.3	2.30	15.0	12.0	15.6
INAF	ERINAF	0.95	87.4	2.30	15.8	12.7	21.1
BH35	ERBH35	0.82	25.3	2.30	4.0	3.2	3.2
BH59	ERBH59	0.95	21.6	2.30	3.9	3.1	3.1
BHNR	ERBHNR	0.95	146.4	2.30	26.7	21.3	21.3
BHRI	ERBHRI	0.95	314.9	2.30	57.3	45.9	45.9
CBNR	ERCBNR	0.60	40.6	2.30	4.7	3.7	3.7
IN51	ERIN51	0.95	10.0	2.30	1.8	1.5	1.5

Kimley-Horn and Associates, Inc.

Project: ***Glendale Stormwater Management Plan***
Subject: **100-year, 2-hour Volumes of Future and Existing Post-1990 Developed Areas**
Model: **Maryvale**
Designed by: **LAT** Date 11/4/2009 KHA Project No. 091910009
Checked by: **MAF** Date 11/9/2009 City of Glendale No. 089017

Objective: To determine the 100-year, 2-hour required retention volume for future development areas.

Subbasin ID	Divert ID	Weighted "C" Factor[1]	Retention Area[2] (ac)	Precipitation[3] (in)	Required Volume[4] (ac-ft)	Reduced Volume[5] (ac-ft)	Retention Volume[6] (ac-ft)
IN59	ERIN59	0.94	13.1	2.30	2.4	1.9	1.9
IN91	ERIN91	0.95	21.9	2.30	4.0	3.2	3.2
ISAF	ERISAF	0.95	13.4	2.30	2.4	2.0	2.0
MD35	ERMD35	0.82	11.8	2.30	1.9	1.5	1.5
OW67	EROW67	0.95	17.0	2.30	3.1	2.5	2.5
TMRI	ERTMRI	0.95	77.7	2.30	14.1	11.3	11.3

Notes:

1. Determined according to land use using "C" values from Table 6.3 in the Maricopa County Drainage Policies and Standards Manual, September 2009.
2. The area within the subbasin that will be developed in the future.
3. The 100-year 2-hour precipitation value obtained from DDMSW NOAA 14 maps.
4. The 100-year, 2-hour required volume, calculated as Weighted "C" Value x Area x Precipitation / 12.
5. A 20% reduction is applied to the required volume resulting in 80% of the required capacity. This volume is diverted out of the model.
6. Sum of existing and future retention.

Kimley-Horn and Associates, Inc.

Project: ***Glendale Stormwater Management Plan***
Subject: **100-year, 2-hour Volumes of Existing Post 1990 Developed Areas**
Model: **Glendale/Peoria**
Designed by: **LAT** Date 1/5/2010 KHA Project No. 091910009
Checked by: **AOM** Date 1/18/2010 City of Glendale No. 089017

Objective: To determine the 100-year, 2-hour required retention volume for areas developed after 1990.

Subbasin ID	Divert ID	Weighted "C" Factor[1]	Retention Area[2] (ac)	Precipitation[3] (in)	Required Volume[4] (ac-ft)	Reduced Volume[5] (ac-ft)
UH35	ERUH35	0.93	281.6	2.70	59.1	47.3
BL35	ERBL35	0.92	48.7	2.70	10.1	8.0
UH43	ERUH43	0.69	215.5	2.70	33.5	26.8
GW43	ERGW43	0.82	37.1	2.70	6.9	5.5
CT43	ERCT43	0.76	302.9	2.70	51.8	41.4
UH51	ERUH51	0.83	325.4	2.70	60.8	48.6
BL51	ERBL51	0.83	154.2	2.70	28.8	23.0
GW51	ERGW51	0.53	13.7	2.70	1.6	1.3
CT51	ERCT51	0.81	204.4	2.70	37.4	29.9
BL59	ERBL59	0.82	494.9	2.70	90.9	72.8
GW59	ERGW59	0.91	214.6	2.70	44.1	35.3
AC59	ERAC59	0.87	360.4	2.70	70.6	56.5
BL67	ERBL67	0.85	85.4	2.70	16.3	13.0
GW67	ERGW67	0.80	332.1	2.70	59.9	47.9
AC75	ERAC75	0.86	70.5	2.70	13.6	10.9
HV55	ERHV55	0.66	793.2	2.70	118.4	94.8
CL57	ERCL57	0.64	356.0	2.70	51.6	41.3
WL59	ERWL59	0.53	116.3	2.70	13.9	11.1
UHSK	ERUHSK	0.63	134.7	2.70	19.0	15.2
SK67	ERSK67	0.70	198.5	2.70	31.3	25.1
UH67	ERUH67	0.79	461.8	2.70	82.6	66.1
UH75	ERUH75	0.72	503.5	2.70	81.5	65.2
BL75	ERBL75	0.92	79.4	2.70	16.5	13.2
UHLO	ERUHLO	0.74	500.5	2.70	83.1	66.5
BLLO	ERBLLO	0.83	476.3	2.70	88.6	70.9
GWLO	ERGWLO	0.91	325.7	2.70	66.5	53.2
JM67	ERJM67	0.71	159.0	2.70	25.4	20.3
JM63	ERJM63	0.63	443.3	2.70	62.9	50.3
HV75	ERHV75	0.69	562.5	2.70	87.5	70.0
JM75	ERJM75	0.65	47.9	2.70	7.0	5.6
PP67	ERPP67	0.53	60.6	2.70	7.3	5.8
HV67	ERHV67	0.79	165.5	2.70	29.3	23.4
CL67	ERCL67	0.69	133.8	2.70	20.6	16.5
PP73	ERPP73	0.70	81.7	2.70	12.9	10.3
PP75	ERPP75	0.62	112.4	2.70	15.6	12.5
WL67	ERWL67	0.53	45.6	2.70	5.4	4.3
WL75	ERWL75	0.62	160.1	2.70	22.5	18.0
WWBR	ERWWBR	0.70	97.5	2.70	15.3	12.2
WWRS	ERWWRS	0.69	56.9	2.70	8.9	7.1
JMRS	ERJMRS	0.67	230.5	2.70	34.7	27.7
83RS	ER83RS	0.71	215.2	2.70	34.4	27.5
HVRS	ERHVRS	0.71	9.0	2.70	1.4	1.1

Kimley-Horn and Associates, Inc.

Project: ***Glendale Stormwater Management Plan***
Subject: **100-year, 2-hour Volumes of Existing Post 1990 Developed Areas**
Model: **Glendale/Peoria**
Designed by: **LAT** Date 1/5/2010 KHA Project No. 091910009
Checked by: **AOM** Date 1/18/2010 City of Glendale No. 089017

Objective: To determine the 100-year, 2-hour required retention volume for areas developed after 1990.

Subbasin ID	Divert ID	Weighted "C" Factor[1]	Retention Area[2] (ac)	Precipitation[3] (in)	Required Volume[4] (ac-ft)	Reduced Volume[5] (ac-ft)
CL77	ERCL77	0.56	121.1	2.70	15.4	12.3
PP77	ERPP77	0.60	5.8	2.70	0.8	0.6
DV75	ERDV75	0.78	161.8	2.70	28.3	22.6
LO75	ERLO75	0.74	259.6	2.70	42.9	34.3
PP81	ERPP81	0.60	118.1	2.70	15.9	12.8
WL83	ERWL83	0.60	40.0	2.70	5.4	4.3
PP87	ERPP87	0.58	278.7	2.70	36.3	29.0
DV83	ERDV83	0.71	13.4	2.70	2.1	1.7
BYNR	ERBYNR	0.92	27.1	2.70	5.6	4.5
DV87	ERDV87	0.60	49.1	2.70	6.7	5.3
BY87	ERBY87	0.69	613.3	2.70	95.9	76.7
UH87	ERUH87	0.63	637.7	2.70	89.8	71.9
UHNR	ERUHNR	0.83	0.9	2.70	0.2	0.1
BLNR	ERBLNR	0.69	41.0	2.70	6.4	5.1
PP91	ERPP91	0.60	71.0	2.70	9.6	7.7
RG93	ERRG93	0.71	158.9	2.70	25.4	20.3
BY91	ERBY91	0.67	320.6	2.70	48.3	38.6
UH91	ERUH91	0.91	24.6	2.70	5.0	4.0
BL91	ERBL91	0.83	526.4	2.70	98.8	79.1
GW91	ERGW91	0.83	147.2	2.70	27.5	22.0
GWNR	ERGWNR	0.70	211.1	2.70	33.3	26.6
TBNR	ERTBNR	0.69	124.3	2.70	19.4	15.5
PPLP	ERPPLP	0.64	166.5	2.70	24.1	19.3
DV99	ERDV99	0.66	66.7	2.70	9.9	7.9
RGLP	ERRGLP	0.60	262.2	2.70	35.3	28.3
BY07	ERBY07	0.76	263.5	2.70	45.1	36.1
GRNR	ERGRNR	0.94	18.0	2.70	3.8	3.0
PENR	ERPENR	0.95	40.1	2.70	8.6	6.9
OLNR	EROLNR	0.82	165.7	2.70	30.6	24.5
NONR	ERNONR	0.80	241.2	2.70	43.3	34.6
NO99	ERNO99	0.71	54.7	2.70	8.7	7.0
GL03	ERGL03	0.94	163.5	2.70	34.6	27.6
JMAF	ERJMAF	0.50	46.9	2.70	5.3	4.2
HV07	ERHV07	0.52	139.1	2.70	16.3	13.1
HVAF	ERHVAF	0.50	137.8	2.70	15.5	12.4
JM99	ERJM99	0.66	324.1	2.70	48.1	38.5
WWLP	ERWWLP	0.62	60.5	2.70	8.4	6.7
JMLP	ERJMLP	0.68	364.6	2.70	56.1	44.9
YLLP	ERYLLP	0.69	48.8	2.70	7.5	6.0
HVLP	ERHVLP	0.95	42.6	2.70	9.1	7.3
HV01	ERHV01	0.84	120.8	2.70	22.8	18.2
CL07	ERCL07	0.67	207.9	2.70	31.5	25.2

Kimley-Horn and Associates, Inc.

Project: ***Glendale Stormwater Management Plan***
Subject: **100-year, 2-hour Volumes of Existing Post 1990 Developed Areas**
Model: **Glendale/Peoria**
Designed by: **LAT** Date 1/5/2010 KHA Project No. 091910009
Checked by: **AOM** Date 1/18/2010 City of Glendale No. 089017

Objective: To determine the 100-year, 2-hour required retention volume for areas developed after 1990.

Subbasin ID	Divert ID	Weighted "C" Factor[1]	Retention Area[2] (ac)	Precipitation[3] (in)	Required Volume[4] (ac-ft)	Reduced Volume[5] (ac-ft)
CLAF	ERCLAF	0.50	74.2	2.70	8.3	6.7
PP03	ERPP03	0.60	31.5	2.70	4.3	3.4
DVAF	ERDVAF	0.71	81.0	2.70	12.9	10.3
DV07	ERDV07	0.71	346.1	2.70	55.0	44.0
DVLP	ERDVLP	0.71	13.8	2.70	2.2	1.8
RG07	ERRG07	0.55	223.9	2.70	27.5	22.0
RGAF	ERRGAF	0.71	81.6	2.70	13.0	10.4
BYAF	ERBYAF	0.65	113.5	2.70	16.5	13.2
UHAF	ERUHAF	0.63	173.9	2.70	24.8	19.8
UH15	ERUH15	0.71	162.3	2.70	26.0	20.8
BL15	ERBL15	0.74	236.3	2.70	39.5	31.6
MEAF	ERMEAF	0.67	81.7	2.70	12.4	9.9
BLAF	ERBLAF	0.66	105.5	2.70	15.6	12.5
OLAF	EROLAF	0.82	149.4	2.70	27.5	22.0
NO11	ERNO11	0.77	117.3	2.70	20.4	16.3
NO07	ERNO07	0.85	56.1	2.70	10.8	8.6
GL11	ERGL11	0.87	234.7	2.70	45.7	36.6

Notes:

1. Determined according to land use using "C" values from Table 6.3 in the Maricopa County Drainage Policies and Standards Manual, September 2009.
2. The area within the subbasin that was developed after 1990.
3. The 100-year 2-hour precipitation value obtained from NOAA Atlas 2 isopluvial maps.
4. The 100-year, 2-hour required volume, calculated as Weighted "C" Value x Area x Precipitation / 12.
5. A 20% reduction is applied to the required volume resulting in 80% of the required capacity. This volume is diverted out of the model.

Kimley-Horn and Associates, Inc.

Project: ***Glendale Stormwater Management Plan***
Subject: **100-year, 2-hour Volumes of Existing and Future Post 1990 Developed Areas**
Model: **Glendale/Peoria**
Designed by: **MAF** Date 3/11/2010 KHA Project No. 091910009
Checked by: **AOM** Date 3/15/2010 City of Glendale No. 089017

Objective: To determine the 100-year, 2-hour required retention volume for areas developed after 1990.

Subbasin ID	Divert ID	Weighted "C" Factor[1]	Retention Area[2] (ac)	Precipitation[3] (in)	Required Volume[4] (ac-ft)	Reduced Volume[5] (ac-ft)	Retention Volume[6] (ac-ft)
UH35	ERUH35	0.00	0.00	2.43	0.0	0.0	47.3
BL35	ERBL35	0.00	0.00	2.43	0.0	0.0	8.0
UH43	ERUH43	0.53	0.11	2.43	0.0	0.0	26.8
GW43	ERGW43	0.94	4.82	2.43	0.9	0.7	6.2
CT43	ERCT43	0.90	0.24	2.43	0.0	0.0	41.4
UH51	ERUH51	0.00	0.00	2.43	0.0	0.0	48.6
BL51	ERBL51	0.00	0.00	2.43	0.0	0.0	23.0
GW51	ERGW51	0.00	0.00	2.43	0.0	0.0	1.3
CT51	ERCT51	0.90	191.40	2.43	34.9	27.9	57.8
BL59	ERBL59	0.95	20.16	2.43	3.9	3.1	75.9
GW59	ERGW59	0.66	6.04	2.43	0.8	0.6	35.9
AC59	ERAC59	0.90	2.63	2.43	0.5	0.4	56.9
BL67	ERBL67	0.79	21.11	2.43	3.4	2.7	15.7
GW67	ERGW67	0.92	15.13	2.43	2.8	2.3	50.2
AC75	ERAC75	0.92	42.88	2.43	8.0	6.4	17.3
HV55	ERHV55	0.56	169.63	2.43	19.2	15.4	110.2
CL57	ERCL57	0.90	16.52	2.43	3.0	2.4	43.7
WL59	ERWL59	0.00	0.00	2.43	0.0	0.0	11.1
UHSK	ERUHSK	0.70	40.06	2.43	5.7	4.5	19.7
SK67	ERSK67	0.88	22.09	2.43	3.9	3.2	28.3
UH67	ERUH67	0.90	4.92	2.43	0.9	0.7	66.8
UH75	ERUH75	0.90	0.01	2.43	0.0	0.0	65.2
BL75	ERBL75	0.00	0.00	2.43	0.0	0.0	13.2
UHLO	ERUHLO	0.00	0.00	2.43	0.0	0.0	66.5
BLLO	ERBLLO	0.00	0.00	2.43	0.0	0.0	70.9
GWLO	ERGWLO	0.55	10.13	2.43	1.1	0.9	54.1
JM67	ERJM67	0.53	38.56	2.43	4.1	3.3	23.6
JM63	ERJM63	0.00	0.00	2.43	0.0	0.0	50.3
HV75	ERHV75	0.71	1.43	2.43	0.2	0.2	70.2
JM75	ERJM75	0.71	327.71	2.43	47.1	37.7	43.3
PP67	ERPP67	0.00	0.00	2.43	0.0	0.0	5.8
HV67	ERHV67	0.53	95.84	2.43	10.3	8.2	31.6
CL67	ERCL67	0.90	1.41	2.43	0.3	0.2	16.7
PP73	ERPP73	0.00	0.00	2.43	0.0	0.0	10.3
PP75	ERPP75	0.68	71.52	2.43	9.8	7.8	20.3
WL67	ERWL67	0.00	0.00	2.43	0.0	0.0	4.3
WL75	ERWL75	0.00	0.00	2.43	0.0	0.0	18.0
WWBR	ERWWBR	0.00	0.00	2.43	0.0	0.0	12.2
WWRS	ERWWRS	0.00	0.00	2.43	0.0	0.0	7.1
JMRS	ERJMRS	0.71	87.46	2.43	12.6	10.1	37.8
83RS	ER83RS	0.71	117.44	2.43	16.9	13.5	41.0
HVRS	ERHVRS	0.71	328.39	2.43	47.1	37.7	38.8

Kimley-Horn and Associates, Inc.

Project: ***Glendale Stormwater Management Plan***
Subject: **100-year, 2-hour Volumes of Existing and Future Post 1990 Developed Areas**
Model: **Glendale/Peoria**
Designed by: **MAF** Date 3/11/2010 KHA Project No. 091910009
Checked by: **AOM** Date 3/15/2010 City of Glendale No. 089017

Objective: To determine the 100-year, 2-hour required retention volume for areas developed after 1990.

Subbasin ID	Divert ID	Weighted "C" Factor[1]	Retention Area[2] (ac)	Precipitation[3] (in)	Required Volume[4] (ac-ft)	Reduced Volume[5] (ac-ft)	Retention Volume[6] (ac-ft)
CL77	ERCL77	0.59	70.78	2.43	8.5	6.8	19.1
PP77	ERPP77	0.58	87.74	2.43	10.4	8.3	8.9
DV75	ERDV75	0.00	0.00	2.43	0.0	0.0	22.6
LO75	ERLO75	0.90	0.01	2.43	0.0	0.0	34.3
PP81	ERPP81	0.00	0.00	2.43	0.0	0.0	12.8
WL83	ERWL83	0.00	0.00	2.43	0.0	0.0	4.3
PP87	ERPP87	0.60	139.08	2.43	16.9	13.5	42.5
DV83	ERDV83	0.00	0.00	2.43	0.0	0.0	1.7
BYNR	ERBYNR	0.89	33.01	2.43	6.0	4.8	9.3
DV87	ERDV87	0.60	0.02	2.43	0.0	0.0	5.3
BY87	ERBY87	0.00	0.00	2.43	0.0	0.0	76.7
UH87	ERUH87	0.00	0.00	2.43	0.0	0.0	71.9
UHNR	ERUHNR	0.76	22.50	2.43	3.5	2.8	2.9
BLNR	ERBLNR	0.90	28.63	2.43	5.2	4.2	9.3
PP91	ERPP91	0.60	0.03	2.43	0.0	0.0	7.7
RG93	ERRG93	0.00	0.00	2.43	0.0	0.0	20.3
BY91	ERBY91	0.00	0.00	2.43	0.0	0.0	38.6
UH91	ERUH91	0.00	0.00	2.43	0.0	0.0	4.0
BL91	ERBL91	0.00	0.00	2.43	0.0	0.0	79.1
GW91	ERGW91	0.00	0.00	2.43	0.0	0.0	22.0
GWNR	ERGWNR	0.00	0.00	2.43	0.0	0.0	26.6
TBNR	ERTBNR	0.00	0.00	2.43	0.0	0.0	15.5
PPLP	ERPPLP	0.87	185.29	2.43	32.8	26.3	45.6
DV99	ERDV99	0.65	694.42	2.43	91.9	73.5	81.4
RGLP	ERRGLP	0.71	88.11	2.43	12.7	10.1	38.4
BY07	ERBY07	0.94	17.12	2.43	3.3	2.6	38.7
GRNR	ERGRNR	0.91	104.96	2.43	19.4	15.5	18.5
PENR	ERPENR	0.82	0.02	2.43	0.0	0.0	6.9
OLNR	EROLNR	0.82	53.63	2.43	8.9	7.1	31.6
NONR	ERNONR	0.72	115.00	2.43	16.7	13.4	48.0
NO99	ERNO99	0.87	136.41	2.43	24.1	19.3	26.3
GL03	ERGL03	0.95	144.46	2.43	27.8	22.2	49.8
JMAF	ERJMAF	0.71	14.29	2.43	2.1	1.6	5.8
HV07	ERHV07	0.71	0.08	2.43	0.0	0.0	13.1
HVAF	ERHVAF	0.00	0.00	2.43	0.0	0.0	12.4
JM99	ERJM99	0.88	29.11	2.43	5.2	4.2	42.7
WWLP	ERWWLP	0.95	22.02	2.43	4.2	3.4	10.1
JMLP	ERJMLP	0.95	35.13	2.43	6.8	5.4	50.3
YLLP	ERYLLP	0.67	71.39	2.43	9.7	7.8	13.8
HVLP	ERHVLP	0.75	15.92	2.43	2.4	1.9	9.2
HV01	ERHV01	0.77	88.03	2.43	13.8	11.0	29.2
CL07	ERCL07	0.61	58.53	2.43	7.3	5.8	31.0

Kimley-Horn and Associates, Inc.

Project: ***Glendale Stormwater Management Plan***
Subject: **100-year, 2-hour Volumes of Existing and Future Post 1990 Developed Areas**
Model: **Glendale/Peoria**
Designed by: **MAF** Date 3/11/2010 KHA Project No. 091910009
Checked by: **AOM** Date 3/15/2010 City of Glendale No. 089017

Objective: To determine the 100-year, 2-hour required retention volume for areas developed after 1990.

Subbasin ID	Divert ID	Weighted "C" Factor[1]	Retention Area[2] (ac)	Precipitation[3] (in)	Required Volume[4] (ac-ft)	Reduced Volume[5] (ac-ft)	Retention Volume[6] (ac-ft)
CLAF	ERCLAF	0.71	31.84	2.43	4.6	3.7	10.4
PP03	ERPP03	0.60	0.02	2.43	0.0	0.0	3.4
DVAF	ERDVAF	0.67	9.44	2.43	1.3	1.0	11.3
DV07	ERDV07	0.60	19.00	2.43	2.3	1.8	45.8
DVLP	ERDVLP	0.75	56.82	2.43	8.7	6.9	8.7
RG07	ERRG07	0.75	156.22	2.43	23.8	19.1	41.1
RGAF	ERRGAF	0.52	0.46	2.43	0.0	0.0	10.4
BYAF	ERBYAF	0.58	136.93	2.43	16.1	12.9	26.1
UHAF	ERUHAF	0.00	0.00	2.43	0.0	0.0	19.8
UH15	ERUH15	0.82	325.64	2.43	53.8	43.0	63.8
BL15	ERBL15	0.71	46.93	2.43	6.7	5.4	37.0
MEAF	ERMEAF	0.85	212.77	2.43	36.6	29.3	39.2
BLAF	ERBLAF	0.71	24.79	2.43	3.6	2.9	15.4
OLAF	EROLAF	0.68	146.43	2.43	20.2	16.2	38.2
NO11	ERNO11	0.82	51.80	2.43	8.6	6.9	23.2
NO07	ERNO07	0.77	18.81	2.43	2.9	2.3	10.9
GL11	ERGL11	0.87	15.92	2.43	2.8	2.2	38.8
AC51	ERAC51	0.82	4.41	2.43	0.7	0.6	0.6
GHAF	ERGHAF	0.95	315.45	2.43	60.7	48.5	48.5
GHNR	ERGHNR	0.95	96.20	2.43	18.5	14.8	14.8
GLAF	ERGLAF	0.95	47.38	2.43	9.1	7.3	7.3
GRAF	ERGRAF	0.73	59.31	2.43	8.7	7.0	7.0
HV83	ERHV83	0.66	21.55	2.43	2.9	2.3	2.3
JM76	ERJM76	0.71	56.94	2.43	8.2	6.5	6.5
OL11	EROL11	0.53	33.29	2.43	3.6	2.9	2.9
PE97	ERPE97	0.95	5.10	2.43	1.0	0.8	0.8
PP07	ERPP07	0.60	39.82	2.43	4.8	3.9	3.9
PPNR	ERPPNR	0.59	53.31	2.43	6.4	5.1	5.1

Notes:

1. Determined according to land use using "C" values from Table 6.3 in the Maricopa County Drainage Policies and Standards Manual, September 2009.
2. The area within the subbasin that will be developed in the future.
3. The 100-year 2-hour precipitation value obtained from DDMSW NOAA 14 maps.
4. The 100-year, 2-hour required volume, calculated as Weighted "C" Value x Area x Precipitation / 12.
5. A 20% reduction is applied to the required volume resulting in 80% of the required capacity. This volume is diverted out of the model.
6. Sum of existing and future retention.

Appendix E Storage Routing Calculations

Arrowhead Lakes Map and Calculations

Regional Detention Basins Calculations

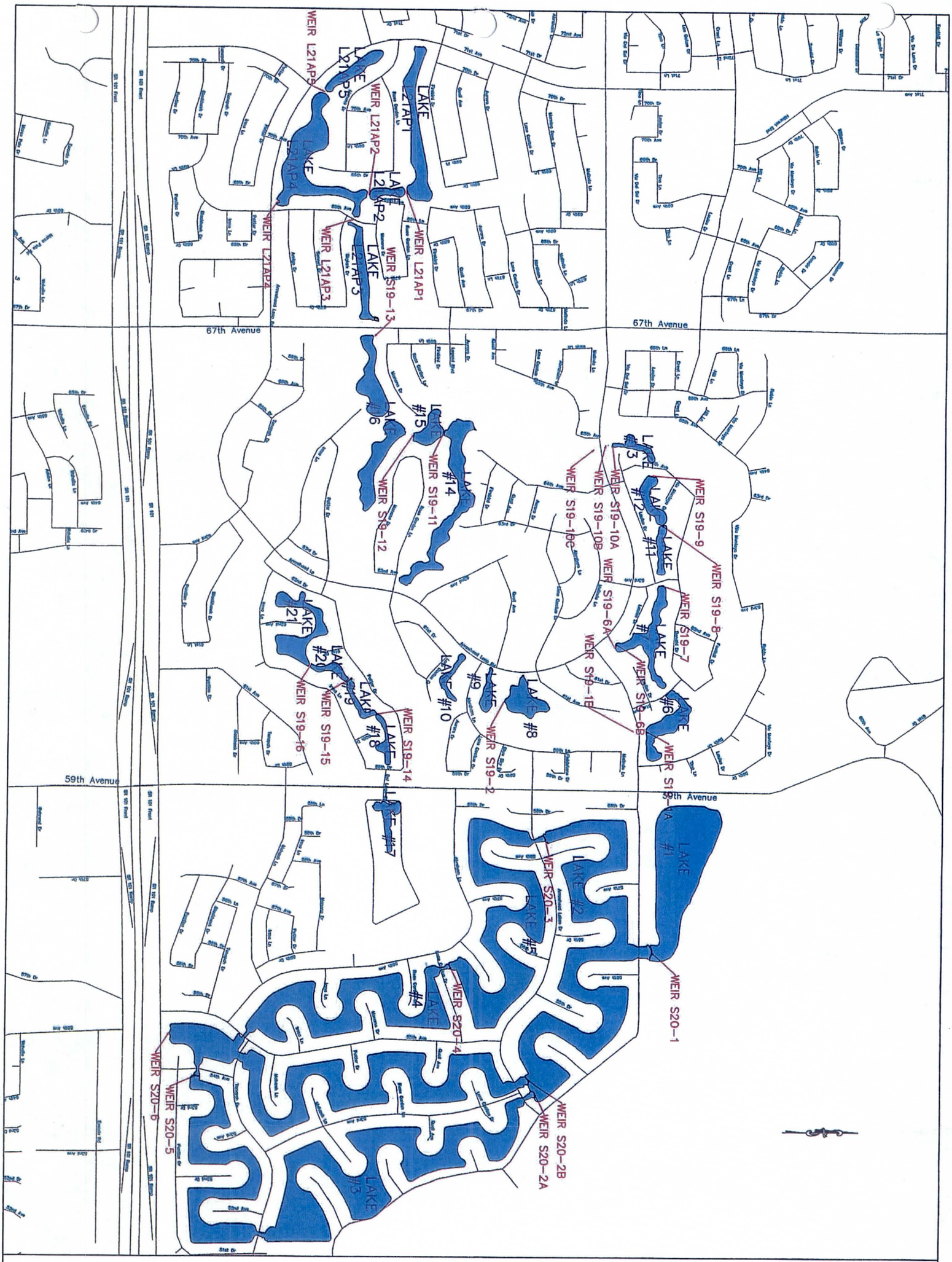

LEGEND

LAKE #1 LAKE IDENTIFICATION

WEIR S20-8 WEIR IDENTIFICATION

SCALE
1" = 100'

IN ASSOCIATION WITH:
PENTACORE ARIZONA

Entellus™
2255 N. 44th Street Suite 125
Phoenix, AZ 85008.3279
Tel 602.244.2566
Fax 602.244.8947
Project No. 310.017

GLENDALE/PEORIA ADMP UPDATE
FLOOD CONTROL DISTRICT OF MARICOPA COUNTY
FCD PROJECT NO. 99-44

FIGURE AL-3.1
ARROWHEAD LAKES OPTION
100-YEAR WATER SURFACE

Kimley-Horn and Associates, Inc.

Project: ***Glendale Stormwater Management Plan***
Subject: **Arrowhead Lakes Stage-Storage-Discharge values**
Model: **Glendale/Peoria**
Designed by: **LSM** Date 1/15/2010 KHA Project No. 091910009
Checked by: **MAF** Date 1/18/2010 City of Glendale No. 089017

Objective: To determine the Stage-Storage-Discharge relationship per subbasin for the Arrowhead Lakes

Subbasin DV56

Volume and Discharges at Varying Depths for Lake 1

Depth (ft)	0.00	0.50	1.00	1.50	2.00	2.50	3.00	3.50	4.00
Volume (ft)	0.00	8.50	17.19	26.06	35.12	44.34	53.71	63.24	72.91
Discharge (cfs)	0	139	399	732	1146	1639	2202	2814	3516

Notes:
Data was obtained from Appendix D.4 of Glendale/Peoria ADMPU Arrowhead Lakes Hydrology Report (Volume AL), January 2001.
Volume and discharge are from Lake 1.

Subbasin LO51

Lake ID	Volume at Varying Depths (ac-ft)								
	0.0 ft	0.5 ft	1.0 ft	1.5 ft	2.0 ft	2.5 ft	3.0 ft	3.5 ft	4.0 ft
2	0.00	14.13	28.79	43.96	59.40	74.84	90.27	105.71	121.14
3	0.00	17.52	38.16	59.58	81.39	103.19	125.00	146.80	168.60
4	0.00	20.87	42.58	65.14	88.11	111.08	134.05	157.03	202.97
5	0.00	9.77	19.90	30.41	41.11	51.80	62.50	73.19	89.89

Volume and Discharges at Varying Depths for Lakes 2 through 5

Depth (ft)	0.00	0.50	1.00	1.50	2.00	2.50	3.00	3.50	4.00
Σ Volume (ft)	0.00	62.29	129.43	199.09	270.01	340.91	411.82	482.73	582.60
Discharge (cfs)	0	120	346	634	993	1421	1908	2439	3047

Notes:
Data was obtained from Appendix D.4 of Glendale/Peoria ADMPU Arrowhead Lakes Hydrology Report (Volume AL), January 2001.
Volume is from Lakes 2, 3, 4, and 5. Discharge is from Lake 4.

Subbasin DV67

Lake ID	Volume at Varying Depths (ac-ft)								
	0.0 ft	0.5 ft	1.0 ft	1.5 ft	2.0 ft	2.5 ft	3.0 ft	3.5 ft	4.0 ft
6	0.00	1.42	2.89	4.42	6.00	7.64	9.34	11.08	12.85
7	0.00	1.55	3.17	4.87	6.62	8.40	10.19	11.97	13.75
11	0.00	0.43	0.90	1.39	1.91	2.45	3.01	3.57	4.13
12	0.00	0.69	1.42	2.18	2.96	3.73	4.51	5.28	6.06
13	0.00	0.40	0.83	1.29	1.78	2.29	2.81	3.34	3.88

Lake ID	Discharge at Varying Depths (cfs)								
	0.0 ft	0.5 ft	1.0 ft	1.5 ft	2.0 ft	2.5 ft	3.0 ft	3.5 ft	4.0 ft
6	0	19	60	119	187	262	345	435	531
7	0	48	150	298	466	654	862	1086	1328
13	0	24	75	149	233	327	431	543	664

Volume and Discharges at Varying Depths for Lakes 6, 7, 11, 12, and 13

Depth (ft)	0.00	0.50	1.00	1.50	2.00	2.50	3.00	3.50	4.00
Σ Volume (ft)	0.00	4.49	9.21	14.15	19.27	24.51	29.86	35.24	40.67
Σ Discharge (cfs)	0	91	285	566	886	1243	1638	2064	2523

Notes:
Data was obtained from Appendix D.4 of Glendale/Peoria ADMPU Arrowhead Lakes Hydrology Report (Volume AL), January 2001.
Volume is from Lakes 6, 7, 11, 12, and 13. Discharge is from Lakes 6, 7, and 13.

Kimley-Horn and Associates, Inc.

Project: ***Glendale Stormwater Management Plan***
Subject: **Arrowhead Lakes Stage-Storage-Discharge values**
Model: **Glendale/Peoria**
Designed by: **LSM** Date 1/15/2010 KHA Project No. 091910009
Checked by: **MAF** Date 1/18/2010 City of Glendale No. 089017

Objective: To determine the Stage-Storage-Discharge relationship per subbasin for the Arrowhead Lakes

Subbasin LO67

Lake ID	Volume at Varying Depths (ac-ft)										
	0.0 ft	0.5 ft	1.0 ft	1.5 ft	2.0 ft	2.5 ft	3.0 ft	3.5 ft	4.0 ft	4.5 ft	5.0 ft
8	0.00	1.20	2.43	3.70	4.99	6.32	7.66	9.03	10.40	---	---
9	0.00	0.42	0.88	1.35	1.83	2.33	2.84	3.35	3.86	---	---
10	0.00	0.38	0.79	1.23	1.69	2.18	2.68	3.18	3.70	---	---
14	0.00	2.93	5.97	9.12	12.39	15.76	19.19	22.67	26.20	---	---
15	0.00	0.76	1.55	2.36	3.19	4.05	4.91	5.80	6.69	---	---
16	0.00	3.75	7.54	11.36	15.21	19.08	22.97	26.89	30.84	34.81	38.81
17	0.00	0.65	1.35	2.07	2.81	5.02	5.78	8.05	8.81	---	---
18	0.00	0.39	0.80	1.22	1.66	2.12	2.58	3.04	3.51	---	---
19	0.00	0.34	0.71	1.08	1.47	1.88	2.30	2.71	3.13	---	---
20	0.00	0.33	0.67	1.03	1.40	1.78	2.16	2.54	2.93	---	---
21	0.00	1.71	3.50	5.34	7.22	9.12	11.01	12.91	14.81	---	---

Lake ID	Discharge at Varying Depths (cfs)										
	0.0 ft	0.5 ft	1.0 ft	1.5 ft	2.0 ft	2.5 ft	3.0 ft	3.5 ft	4.0 ft	4.5 ft	5.0 ft
16	9	25	84	159	229	310	380	449	504	550	596
21	0	16	16	16	16	16	16	53	153	---	---

Depth (ft)	0.00	0.50	1.00	1.50	2.00	2.50	3.00	3.50	4.00	4.50	5.00
Σ Volume (ft)	0.00	12.86	26.19	39.86	53.86	69.64	84.08	100.17	114.88	149.69	188.50
Σ Discharge (cfs)	9	41	100	175	245	326	396	502	657	703	749

Notes:
Data was obtained from Appendix D.4 of Glendale/Peoria ADMPU Arrowhead Lakes Hydrology Report (Volume AL), January 2001.
Volume is from Lakes 8, 9, 10, 14, 15, 16, 17, 18, 19, 20, and 21. Discharge is from Lakes 16 and 21.

Subbasin LO75

Lake ID	Volume Records (ac-ft)			
L21AP1	0.00	5.11	10.69	17.07
L21AP5	0.00	3.63	5.72	8.12
L21AP3	0.00	1.05	3.23	5.55
L21AP4	0.00	2.79	11.60	21.28

Depth (ft)	0.00	0.50	1.00	1.50
Σ Volume (ft)	0.00	12.58	31.24	52.02
Discharge (cfs)	0	46	418	768

Notes:
Data was obtained from Appendix D.4 of Glendale/Peoria ADMPU Arrowhead Lakes Hydrology Report (Volume AL), January 2001.
Volume is from Lakes L21AP1, L21AP3, L21AP4, and L21AP5. No information was available for L21AP2. Discharge is from Lake L21AP4.

Kimley-Horn and Associates, Inc.

Project: ***Glendale Stormwater Management Plan***
Subject: **87th Avenue Detention Basin - Extrapolation of Storage-Discharge Curve**
Model: **Glendale/Peoria**
Designed by: **LAT** Date 1/14/2010 KHA Project No. 091910009
Checked by: **MAF** Date 1/18/2010 City of Glendale No. 089017

Detention Basin - SRPP87

Elevation [ft]	Surface Area [sq ft]	Volume [cu ft]	Volume [ac ft]	H1 [ft]	H2 [ft]	Q1 [cfs]	Q2 [cfs]	Total Q [cfs]	Bypass Flows [cfs]	Hs [ft]	Spillway [cfs]	Total Q [cfs]	
1313	0.00	0.00	0.00	0.00	0.00	0.00	0.00	0.00	0.00	0.00	0.00	0.00	
1314	70608	35304	0.81	0.00	0.23	0.00	12.11	12.11	12.11	0.00	0.00	0.00	
1315	157478	149347	3.43	1.23	1.23	27.85	27.85	55.70	21.57	0.00	0.00	34.13	
1316	169554	312863	7.18	2.23	2.23	37.48	37.48	74.96	21.57	0.00	0.00	53.39	
1317	180871	488076	11.20	3.23	3.23	45.10	45.10	90.19	21.57	0.00	0.00	68.62	
1318	188761	672892	15.45	4.23	4.23	51.60	51.60	103.20	21.57	0.00	0.00	81.63	
1319	196472	865508	19.87	5.23	5.23	57.37	57.37	114.74	21.57	0.00	0.00	93.17	
1320	204093	1065791	24.47	6.23	6.23	62.61	62.61	125.23	21.57	0.00	0.00	103.66	
1321	211648	1273661	29.24	7.23	7.23	67.45	67.45	134.90	21.57	0.00	0.00	113.33	
1321.7	211648	1421815	32.64	7.93	7.93	70.64	70.64	141.28	21.57	0.00	0.00	119.71	*
1322	211648	1485309	34.10	8.23	8.23	71.96	71.96	143.92	21.57	0.30	85.44	207.80	*
1322.5		1580551	36.28	8.73	8.73	74.11	74.11	148.23	21.57	0.80	372.08	498.74	*
1322.9	211648	1675792	38.47	9.13	9.13	75.79	75.79	151.58	21.57	1.20	683.56	813.57	*

Notes:

Orifice Equation

$$Q = C_d A_o (2gH)^{0.5}$$

Cd 0.62 ---
g 32.2 ft/sec^2

Weir Equation

$$Q = CLH^{3/2}$$

C 2.6 ---
L 200 ft

Orifice Details

Orifice [---]	Elevation [ft]	Diameter [in]	Area [sq ft]	Center Elev [ft]	Bypass Elev [ft]
1	1312.5	30.4	5.04	1313.77	1313.77
2	1312.5	30.4	5.04	1313.77	1314.51

Data from Table 1-1 of *Final Drainage Report, 83rd Avenue/Pinnacle Peak Road Drainage Improvements*, January 2006

* Calculations added from data provided elsewhere in the report

Kimley-Horn and Associates, Inc.

Project: ***Glendale Area SMP***
Subject: **Detention Basin Calculations - SRAM59**
Model: **Glendale/Peoria**
Designed by: **JSN** Date 12/2/2009 KHA Project No. 091910009
Checked by: **MAF** Date 12/8/2009 City of Glendale No. 089017

Objective: To determine the Stage-Storage-Discharge relationship for regional detention basins

Detention Basin - SRAM59

		Outlet X-Sect Area	15.904 ft^2
Outlet Diameter	4.50 ft	No. of Outlet Barrels	1
Outlet Elevation	1214.5 ft	Outlet Pipe Slope	0.004 ft/ft
Overflow Weir Length	250 ft	Weir Coefficient	2.7

Elevation [ft]	Surface Storage Area [ft^2]	Surface Storage Area [acre]	Average Area [acre]	Δ Elev [ft]	Δ Vol [ac-ft]	Σ Vol [ac-ft]	Q_{pipe} [cfs]	Q_{weir} [cfs]	Total Q_{out} [cfs]
1214.5	4,596	0.11				0	0	0	0
			0.42	0.5	0.21				
1215	31,655	0.73				0.21	3.24	0	3.24
			0.87	3.0	2.61				
1218	44,162	1.01				2.82	118.11	0	118.11
			1.36	6.0	8.13				
1224	73,900	1.70				10.95	206.19	0	206.19
				Overtopping					
			1.73	0.5	0.87				
1224.5	77,035	1.77				11.82	213.19	238.65	451.8
			1.77	1.0	1.77				
1225	80,170	1.84				12.72	219.96	675.00	895.0
			2.17	1.0	2.17				
1226	109,146	2.51				14.89	232.91	1909.19	2142.1

Notes:

a) Q_{pipe} goes from Mannings Eqn to Orifice Eqn when water surface exceeds 1.2*(Outlet Diameter) per Linsley et al. Water Resources Engineering 4th Edition, pg 652.

b) Data from Plan #18065 - *59th Avenue Detention Basin,* City of Glendale, August 1990

Kimley-Horn and Associates, Inc.

Project: ***Glendale Area SMP***
Subject: **Detention Basin Calculations - SRPE67**
Model: **Maryvale**
Designed by: **JSN** Date 11/23/2009 KHA Project No. 091910009
Checked by: **MAF** Date 12/9/2009 City of Glendale No. 089017

Objective: To determine the Stage-Storage-Discharge relationship for regional detention basins

Detention Basin - SRPE67

Overflow Weir Length 900 ft Weir Coefficient 2.7

Elevation [ft]	Surface Storage Area [ft^2]	Surface Storage Area [acre]	Average Area [acre]	Δ Elev [ft]	Δ Vol [ac-ft]	Σ Vol [ac-ft]	Q_{pipe} [cfs]	Q_{weir} [cfs]	Total Q_{out} [cfs]
87	215,862	4.96				0	0	0	0
			5.24	1.0	5.24				
88	240,427	5.52				5.24	0.00	0	0.00
			6.03	1.0	6.03				
89	285,165	6.55				11.27	0.00	0	0.00
				Overtopping					
			6.98	0.2	1.40				
89.2	322,916	7.41				12.67	0.00	217.35	217.3
			7.63	0.8	6.11				
90	342,079	7.85				18.77	0.00	2430.00	2430.00
			8.04	1.0	8.04				
91	358,093	8.22				26.81	0.00	6873.08	6873.08
			8.39	1.0	8.39				
92	372,632	8.55				35.20	0.00	12,626.65	12,626.65

Notes:

a) Stage-Storage data developed from Plan #11567 - *Sunnyside Park* As-built Records, City of Glendale, 1991

Kimley-Horn and Associates, Inc.

Project: ***Glendale Area SMP***
Subject: **Detention Basin Calculations - SRBR63**
Model: **Maryvale**
Designed by: **JSN** Date 11/23/2009 KHA Project No. 091910009
Checked by: **MAF** Date 12/9/2009 City of Glendale No. 089017

Objective: To determine the Stage-Storage-Discharge relationship for regional detention basins

Detention Basin - SRBR63

		Outlet X-Sect Area	4.909 ft^2
Outlet Diameter	2.50 ft	No. of Outlet Barrels	1
Outlet Elevation	57 ft	Outlet Pipe Slope	0.004 ft/ft
Overflow Weir Length	440 ft	Weir Coefficient	2.7

Elevation [ft]	Surface Storage Area [ft^2]	Surface Storage Area [acre]	Average Area [acre]	Δ Elev [ft]	Δ Vol [ac-ft]	Σ Vol [ac-ft]	Q_{pipe} [cfs]	Q_{weir} [cfs]	Total Q_{out} [cfs]
57	26,047	0.60				0	0	0	0
			0.83	1.0	0.83				
58	46,342	1.06				0.83	8.74	0	8.74
			1.12	1.0	1.12				
59	51,407	1.18				1.95	25.36	0	25.36
			1.41	4.0	5.64				
63	71,386	1.64				7.59	51.51	0	51.51
Overtopping									
			1.82	0.3	0.45				
63.25	87,013	2.00				8.05	52.85	148.5	201.35
			2.00	0.5	1.00				
63.5	102,641	2.36				8.59	54.16	420.02	474.2

Notes:

a) Q_{pipe} goes from Mannings Eqn to Orifice Eqn when water surface exceeds 1.2*(Outlet Diameter) per Linsley et al. Water Resources Engineering 4th Edition, pg 652.

b) Stage-Storage data developed from Plan #14408 - *Sahuaro Ranch Park-Phase VI* Civil Survey, City of Glendale, 1988

Kimley-Horn and Associates, Inc.

Project: ***Glendale Area SMP***
Subject: **Detention Basin Calculations - SR67MV**
Model: **Maryvale**
Designed by: **JSN** Date 12/1/2009 KHA Project No. 091910009
Checked by: **MAF** Date 12/9/2009 City of Glendale No. 089017

Objective: To determine the Stage-Storage-Discharge relationship for regional detention basins

Detention Basin - SR67MV

		Outlet X-Sect Area	4.909 ft^2
Outlet Diameter	2.50 ft	No. of Outlet Barrels	1
Outlet Elevation	1169.5 ft	Outlet Pipe Slope	0.004 ft/ft
Overflow Weir Length	530 ft	Weir Coefficient	2.7

Elevation [ft]	Surface Storage Area [ft^2]	Surface Storage Area [acre]	Average Area [acre]	Δ Elev [ft]	Δ Vol [ac-ft]	Σ Vol [ac-ft]	Q_{pipe} [cfs]	Q_{weir} [cfs]	Total Q_{out} [cfs]
1170	92,643	2.13				0	0	0	0
			2.29	1.0	2.29				
1171	106,702	2.45				2.29	17.43	0	17.43
				Overtopping					
			2.58	0.3	0.65				
1171.25	118,425	2.72				2.93	21.72	178.88	200.6
			2.72	0.5	1.36				
1171.5	130,149	2.99				3.65	25.36	505.93	531.3
			2.99	1.0	2.99				
1172	153,595	3.53				5.28	25.94	1431.00	1456.9

Notes:

a) Q_{pipe} goes from Mannings Eqn to Orifice Eqn when water surface exceeds 1.2*(Outlet Diameter) per Linsley et al. Water Resources Engineering 4th Edition, pg 652.

b) Stage-Storgage data developed from Plan #10168 - *Chaparral Ranch Retention Basin,* City of Glendale, August 1984

Kimley-Horn and Associates, Inc.

Project: ***Glendale Area SMP***
Subject: **Detention Basin Calculations - SROL71**
Model: **Maryvale**
Designed by: **JSN** Date 11/23/2009 KHA Project No. 091910009
Checked by: **MAF** Date 12/9/2008 City of Glendale No. 089017

Objective: To determine the Stage-Storage-Discharge relationship for regional detention basins

Detention Basin - SROL71

		Outlet X-Sect Area	15.904 ft^2
Outlet Diameter	4.50 ft	No. of Outlet Barrels	1
Outlet Elevation	1128 ft	Outlet Pipe Slope	0.005 ft/ft
Overflow Weir Length	950 ft	Weir Coefficient	2.7

Elevation [ft]	Surface Storage Area [ft^2]	Surface Storage Area [acre]	Average Area [acre]	Δ Elev [ft]	Δ Vol [ac-ft]	Σ Vol [ac-ft]	Q_{pipe} [cfs]	Q_{weir} [cfs]	Total Q_{out} [cfs]
1128	2,762	0.06				0	0	0	0
			4.39	2.0	8.78				
1130	379,588	8.71				8.78	56.66	0	56.66
			9.17	2.0	18.34				
1132	419,094	9.62				27.11	147.37	0	147.37
			10.06	2.0	20.13				
1134	457,753	10.51				47.24	148.29	0	148.29
			10.95	2.0	21.91				
1136	496,508	11.40				69.15	183.63	0	183.63
			11.89	2.0	23.79				
1138	539,782	12.39				92.94	213.19	0	213.19
				Overtopping					
			12.61	1.0	12.61				
1139	559,213	12.84				105.55	226.52	2565	2791.52
			12.84	2.0	25.68				
1140	578,643	13.28				118.61	239.12	7254.92	7494.0

Notes:

a) Q_{pipe} goes from Mannings Eqn to Orifice Eqn when water surface exceeds 1.2*(Outlet Diameter) per Linsley et al. Water Resources Engineering 4th Edition, pg 652.

b) Stage-storage data developed using topography obtained from FCDMC.

c) Slope of outlet pipe was assumed to be 0.005 ft/ft.

Kimley-Horn and Associates, Inc.

Project: ***Glendale Area SMP***
Subject: **Detention Basin Calculations - SROL83**
Model: **Maryvale**
Designed by: **JSN** Date 11/23/2009 KHA Project No. 091910009
Checked by: **MAF** Date 12/9/2009 City of Glendale No. 089017

Objective: To determine the Stage-Storage-Discharge relationship for regional detention basins

Detention Basin - SROL83

		Outlet X-Sect Area	15.904 ft^2
Outlet Diameter	4.50 ft	No. of Outlet Barrels	1
Outlet Elevation	1118 ft	Outlet Pipe Slope	0.005 ft/ft
Overflow Weir Length	500 ft	Weir Coefficient	2.7

Elevation [ft]	Surface Storage Area [ft^2]	Surface Storage Area [acre]	Average Area [acre]	Δ Elev [ft]	Δ Vol [ac-ft]	Σ Vol [ac-ft]	Q_{pipe} [cfs]	Q_{weir} [cfs]	Total Q_{out} [cfs]
1118	81,444	1.87				0	0	0	0
			2.73	2.0	5.45				
1120	156,102	3.58				5.45	56.66	0	56.66
			3.81	2.0	7.62				
1122	175,799	4.04				13.07	147.37	0	147.37
			4.27	2.0	8.53				
1124	195,882	4.50				21.61	148.29	0	148.29
Overtopping									
			4.60	0.5	2.30				
1124.5	204,784	4.70				23.90	157.87	477.30	635.17
			4.70	1.0	4.70				
1125	213,686	4.91				26.31	166.90	1350	1516.90
			4.91	2.0	9.81				
1126	231,491	5.31				31.42	183.63	3818.38	4002.0

Notes:

a) Q_{pipe} goes from Mannings Eqn to Orifice Eqn when water surface exceeds 1.2*(Outlet Diameter) per Linsley et al. Water Resources Engineering 4th Edition, pg 652.

b) Stage-storage data developed using topography obtained from FCDMC.

c) Slope of outlet pipe was assumed to be 0.005 ft/ft.

Kimley-Horn and Associates, Inc.

Project: ***Glendale Area SMP***
Subject: **Detention Basin Calculations - SRNO59**
Model: **Maryvale**
Designed by: **JSN** Date 12/2/2009 KHA Project No. 091910009
Checked by: **MAF** Date 12/9/2009 City of Glendale No. 089017

Objective: To determine the Stage-Storage-Discharge relationship for regional detention basins

Detention Basin -SRNO59

Overflow Weir Length 900 ft Weir Coefficient 2.7

Elevation [ft]	Surface Storage Area [ft²]	Surface Storage Area [acre]	Average Area [acre]	Δ Elev [ft]	Δ Vol [ac-ft]	Σ Vol [ac-ft]	Q_{pipe} [cfs]	Q_{weir} [cfs]	Total Q_{out} [cfs]
96	47,624	1.09				0	0	0	0
			1.87	1.0	1.87				
97	115,535	2.65				1.87	0.00	0	0.00
			2.78	1.0	2.78				
98	126,460	2.90				4.65	0.00	0	0.00
			3.03	1.0	3.03				
99	137,747	3.16				7.68	0.00	0	0.00
Overtopping									
			7.91	1.0	7.91				
100	551,473	12.66				15.59	0.00	2430.00	2430.0

Notes:

a) Stage-Storage data combined from Plan #15595 - *Butler Park Detention Basin Plan* As-Built Record, City of Glendale, 1991 and #14661 - *Butler Park Street Improvements Retention Basin*, City of Glendale, 1990

b) Overtopping area was calculated using topography obtained from FCDMC.

Kimley-Horn and Associates, Inc.

Project: ***Glendale Area SMP***
Subject: **Detention Basin Calculations - SRNO91**
Model: **Maryvale**
Designed by: **JSN** Date 11/23/2009 KHA Project No. 091910009
Checked by: **MAF** Date 12/8/2009 City of Glendale No. 089017

Objective: To determine the Stage-Storage-Discharge relationship for regional detention basins

Detention Basin - SRNO91

		Outlet X-Sect Area	3.142 ft^2
Outlet Diameter	2.00 ft	No. of Outlet Barrels	1
Outlet Elevation	1088.458 ft	Outlet Pipe Slope	0.0021 ft/ft
Overflow Weir Length	2078 ft	Weir Coefficient	2.7

Elevation [ft]	Surface Storage Area [ft^2]	Surface Storage Area [acre]	Average Area [acre]	Δ Elev [ft]	Δ Vol [ac-ft]	Σ Vol [ac-ft]	Q_{pipe} [cfs]	Q_{weir} [cfs]	Total Q_{out} [cfs]
1089.2	59,938	1.38				0	0	0	0
			4.12	1.7	7.00				
1090.9	298,805	6.86				7.00	18.16	0	18.16
			9.28	1.6	14.84				
1092.5	509,399	11.69				21.84	26.38	0	26.38
			12.22	3.3	40.34				
1095.8	555,615	12.76				62.18	38.09	0	38.09
				Overtopping					
			12.86	0.4	5.31				
1096.2	565,117	12.97				67.49	39.31	1486.43	1525.75
			13.08	0.4	5.40				
1096.6	574,619	13.19				72.89	40.50	4204.27	4244.76
			13.41	0.8	11.06				
1097.5	593,623	13.63				83.95	42.76	11891.46	11934.22
			13.63	3.3	44.97				
1099.1	631,632	14.50				107.16	46.97	33634.13	33681.1

Notes:

a) Q_{pipe} goes from Mannings Eqn to Orifice Eqn when water surface exceeds 1.2*(Outlet Diameter) per Linsley et al. Water Resources Engineering 4th Edition, pg 652.

b) Areas were obtained from *Northern & Butler Storm Drains, Sub-Phase "A", Phase II Plans* (Peoria Basin)

c) Elevation is in meters on plans and was converted to feet for developing stage-storage relationship

Kimley-Horn and Associates, Inc.

Project: ***Glendale Area SMP***
Subject: **Detention Basin Calculations - SRBH51W**
Model: **Maryvale**
Designed by: **JSN** Date 11/23/2009 KHA Project No. 091910009
Checked by: **MAF** Date 12/8/2009 City of Glendale No. 089017

Objective: To determine the Stage-Storage-Discharge relationship for regional detention basins

Detention Basin - SRBH51W

		Outlet X-Sect Area	3.142 ft^2
Outlet Diameter	2.00 ft	No. of Outlet Barrels	1
Outlet Elevation	1146.45 ft	Outlet Pipe Slope	0.0015 ft/ft
Overflow Weir Length	600 ft	Weir Coefficient	2.7

Elevation [ft]	Surface Storage Area [ft^2]	Surface Storage Area [acre]	Average Area [acre]	Δ Elev [ft]	Δ Vol [ac-ft]	Σ Vol [ac-ft]	Q_{pipe} [cfs]	Q_{weir} [cfs]	Total Q_{out} [cfs]
1146	2,917	0.07				0	0	0	0
			1.00	2.0	1.99				
1148	83,791	1.92				1.99	8.29	0	8.29
			5.21	2.0	10.42				
1150	370,110	8.50				12.41	24.16	0	24.16
Overtopping									
			9.88	1.0	9.88				
1151	491,030	11.27				22.30	28.50	1620.00	1648.5

Notes:

a) Q_{pipe} goes from Mannings Eqn to Orifice Eqn when water surface exceeds 1.2*(Outlet Diameter) per Linsley et al. Water Resources Engineering 4th Edition, pg 652.

b) Stage-storage data developed using topography obtained from FCDMC.

Kimley-Horn and Associates, Inc.

Project: ***Glendale Area SMP***
Subject: **Detention Basin Calculations - SRBH51E**
Model: **Maryvale**
Designed by: **JSN** Date 11/23/2009 KHA Project No. 091910009
Checked by: **MAF** Date 12/8/2009 City of Glendale No. 089017

Objective: To determine the Stage-Storage-Discharge relationship for regional detention basins

Detention Basin - SRBH51E

Overflow Weir Length 1000 ft Weir Coefficient 2.7

Elevation [ft]	Surface Storage Area [ft^2]	Surface Storage Area [acre]	Average Area [acre]	Δ Elev [ft]	Δ Vol [ac-ft]	Σ Vol [ac-ft]	Q_{pipe} [cfs]	Q_{weir} [cfs]	Total Q_{out} [cfs]
1152	174,382	4.00				0	0	0	0
			4.61	2.0	9.22				
1154	227,409	5.22				9.22	0.00	0	0.00
			5.42	2.0	10.84				
1156	244,713	5.62				20.06	0.00	0	0.00
Overtopping									
			10.85	1.0	10.85				
1157	700,146	16.07				30.91	0.00	2700.00	2700.0

Notes:

a) Stage-storage data developed using topography obtained from FCDMC.

Project: ***Glendale Area SMP***
Subject: **Detention Basin Calculations - SRGR67**
Model: **Maryvale**
Designed by: **JSN** Date 11/23/2009 KHA Project No. 091910009
Checked by: **MAF** Date 12/9/2009 City of Glendale No. 089017

Objective: To determine the Stage-Storage-Discharge relationship for regional detention basins

HEC-1 Input

```
1109    KK    67NK
        * RESERVOIR STORAGE
1110    KO      0      0     0.0      0      22
1111    RS      1    FLOW    0.0    0.0
        * 59GC Volume
1112    SV    0.0   39.27  156.58  183.54  211.71  240.99  271.86  304.09  475.82
        * 59GC Storage elev
1113    SE  1131.0  1136.0  1141.0  1142.0  1143.0  1144.0  1145.0  1146.0  1151.0
        * 59GC Outflow
1114    SQ    0.0   125.0   125.0   125.0   125.0   125.0   130.0   925.0
        * 59GC Outflow elev
1115    SE  1131.0  1131.1  1136.0  1141.0  1142.0  1143.0  1144.0  1145.0
```

Notes:
HEC-1 input excerpt from Appendix D of *Determination of Mapping and Floodzone Changes and Elevation Certificates,* Technical Data Notebook, City of Glendale Project #056017, prepared by Project Engineering Consultants, Ltd., September 2008

E.1 Storm Drain Flow Calculations

Reach	Slope (ft/ft)	Manning n	Pipe D (in.)	Area (ft^2)	Hydraulic Radius (ft)	Q (cfs)	Q added @ Location (cfs)
67N_BASIN	0.0023	0.013	60	19.635	1.25	124.90	125

Notes:
67N_BASIN is the reach. From Appendix E of *Determination of Mapping and Floodzone Changes and Elevation Certificates,* Technical Data Notebook, City of Glendale Project #056017, prepared by Project Engineering Consultants, Ltd., September 2008

Objective: To determine the Stage-Storage-Discharge relationship for regional detention basins

E.2 Weir Calculations

Basin 67N

Discharge (cfs)	HW Elev. (ft)
0	1,143.90
50	1,144.25
100	1,144.37
150	1,144.46
200	1,144.52
250	1,144.58
300	1,144.64
350	1,144.69
400	1,144.73
450	1,144.77
500	1,144.81
550	1,144.85
600	1,144.88

Notes:

67N_BASIN is the reach. From Appendix E of *Determination of Mapping and Floodzone Changes and Elevation Certificates,* Technical Data Notebook, City of Glendale Project #056017, prepared by Project Engineering Consultants, Ltd., September 2008

Kimley-Horn and Associates, Inc.

Project: ***Glendale Area SMP***
Subject: **Detention Basin Calculations - SRGR67**
Model: **Maryvale**
Designed by: **JSN** Date 11/23/2009 KHA Project No. 091910009
Checked by: **MAF** Date 12/9/2009 City of Glendale No. 089017

Objective: To determine the Stage-Storage-Discharge relationship for regional detention basins

Detention Basin - SRGR67

		Outlet X-Sect Area	19.635 ft^2
Outlet Diameter	5.00 ft	No. of Outlet Barrels	1
Outlet Elevation	1129.5 ft	Outlet Pipe Slope	0.0023 ft/ft
Overflow Weir Length	450 ft	Weir Coefficient	2.7

Elevation [ft]	Surface Storage Area [ft^2]	Surface Storage Area [acre]	Average Area [acre]	Δ Elev [ft]	Δ Vol [ac-ft]	Σ Vol [ac-ft]	Q_{pipe} [cfs]	Q_{weir} [cfs]	Total Q_{out} [cfs]
1130	15,912	0.37				0	0	0	0
			2.25	1.0	2.25				
1131	179,810	4.13				2.25	24.46	0	24.46
			9.13	1.0	9.13				
1132	615,541	14.13				11.38	62.45	0	62.45
			19.94	1.0	19.94				
1133	1,121,848	25.75				31.32	104.57	0	104.57
			26.44	1.0	26.44				
1134	1,181,373	27.12				57.76	133.12	0	133.12
			27.63	3.0	82.88				
1136	1,225,441	28.13				140.64	189.08	0	189.08
			29.68	8.0	237.41				
1142	1,359,949	31.22				378.04	298.97	0	298.97
Overtopping									
			31.66	1.0	31.66				
1143	1,398,622	32.11				409.71	313.56	1215.00	1528.6
			34.53	2.0	69.05				
1145	1,609,223	36.94				478.76	340.88	6313.33	6654.2

Notes:

a) Q_{pipe} goes from Mannings Eqn to Orifice Eqn when water surface exceeds 1.2*(Outlet Diameter) per Linsley et al. Water Resources Engineering 4th Edition, pg 652.

b) Stage-storage data developed from Orangewood Avenue Storm Drain Sub-Phase "C" As-built records, 2000.

c) Data from HEC-1 did not match as-built data. As-built data was used.

Kimley-Horn and Associates, Inc.

Project: ***Glendale Area SMP***
Subject: **Detention Basin Calculations - SROW75**
Model: **Maryvale**
Designed by: **JSN** Date 11/23/2009 KHA Project No. 091910009
Checked by: **MAF** Date 12/9/2009 City of Glendale No. 089017

Objective: To determine the Stage-Storage-Discharge relationship for regional detention basins

Detention Basin - SROW75

		Outlet X-Sect Area	23.758 ft^2
Outlet Diameter	5.50 ft	No. of Outlet Barrels	1
Outlet Elevation	1123.5 ft	Outlet Pipe Slope	0.5377 ft/ft
Overflow Weir Length	500 ft	Weir Coefficient	2.7

Elevation [ft]	Surface Storage Area [ft^2]	Surface Storage Area [acre]	Average Area [acre]	Δ Elev [ft]	Δ Vol [ac-ft]	Σ Vol [ac-ft]	Q_{pipe} [cfs]	Q_{weir} [cfs]	Total Q_{out} [cfs]
1121	317,747	7.29				0	0	0	0
			8.74	1.0	8.74				
1122	443,770	10.19				8.74	0.00	0	0.00
			11.62	1.0	11.62				
1123	568,317	13.05				20.36	0.00	0	0.00
			14.00	1.0	14.00				
1124	651,699	14.96				34.36	42.07	0	42.07
			15.17	1.0	15.17				
1125	669,983	15.38				49.53	400.46	0	400.46
			15.59	1.0	15.59				
1126	688,350	15.80				65.12	1044.02	0	1044.02
			16.23	2.0	32.45				
1128	725,266	16.65				97.58	2458.51	0	2458.51
Overtopping									
			20.64	1.0	20.64				
1129	1,072,788	24.63				118.22	2462.42	1350.00	3812.4

Notes:

a) Q_{pipe} goes from Mannings Eqn to Orifice Eqn when water surface exceeds 1.2*(Outlet Diameter) per Linsley et al. Water Resources Engineering 4th Edition, pg 652.

b) Stage-Storage data developed from Plan #25135 - *Orangewood Avenue Storm Drain* As-built Records, City of Glendale, 1980

Kimley-Horn and Associates, Inc.

Project: ***Glendale Area SMP***
Subject: **Detention Basin Calculations - SRISGC**
Model: **Maryvale**
Designed by: **JSN** Date 12/2/2009 KHA Project No. 091910009
Checked by: **MAF** Date 12/8/2009 City of Glendale No. 089017

Objective: To determine the Stage-Storage-Discharge relationship for regional detention basins

Detention Basin - SRISGC

		Outlet X-Sect Area	50.265 ft^2
Outlet Diameter	8.00 ft	No. of Outlet Barrels	1
Outlet Elevation	85 ft	Outlet Pipe Slope	0.0001 ft/ft
Overflow Weir Length	1030 ft	Weir Coefficient	2.7

Elevation [ft]	Surface Storage Area [ft^2]	Surface Storage Area [acre]	Average Area [acre]	Δ Elev [ft]	Δ Vol [ac-ft]	Σ Vol [ac-ft]	Q_{pipe} [cfs]	Q_{weir} [cfs]	Total Q_{out} [cfs]
85	26,136	0.60				0	0	0	0
			1.52	1.0	1.52				
86	106,193	2.44				1.52	3.04	0	3.04
			3.09	1.0	3.09				
87	163,316	3.75				4.61	12.49	0	12.49
			4.12	2.0	8.24				
89	195,483	4.49				12.85	45.60	0	45.60
			4.80	2.0	9.61				
91	222,965	5.12				22.46	83.17	0	83.17
			5.43	2.0	10.87				
93	250,494	5.75				33.32	91.21	0	91.21
			6.08	2.0	12.15				
95	278,930	6.40				45.48	592.84	0	592.84
				Overtopping					
			6.49	0.5	3.25				
95.5	286,499	6.58				48.72	617.05	983.23	1600.28
			6.58	1.0	6.58				
96	294,067	6.75				52.06	640.34	2781.00	3421.3

Notes:

a) Q_{pipe} goes from Mannings Eqn to Orifice Eqn when water surface exceeds 1.2*(Outlet Diameter) per Linsley et al. Water Resources Engineering 4th Edition, pg 652.

b) Stage-storage data was developed from as-built contours (from Bethany Home Outfall Channel TDN for CLOMR, January 2003)

c) Outlet pipe has an adverse slope. The slope was approximated as 0.0001 ft/ft.

Kimley-Horn and Associates, Inc.

Project: *Glendale Area SMP*
Subject: **Detention Basin Calculations - SRGC75**
Model: **Maryvale**
Designed by: **JSN** Date 11/23/2009 KHA Project No. 091910009
Checked by: **MAF** Date 12/9/2009 City of Glendale No. 089017

Objective: To determine the Stage-Storage-Discharge relationship for regional detention basins

Detention Basin - SRGC75

Outlet Elevation 1082.15 ft
Overflow Weir Length 0 ft
Outlet Channel Width 14.00 ft
Outlet Channel Slope 0.000992 ft/ft
Weir Coefficient 2.7

Elevation [ft]	Surface Storage Area [ft²]	Surface Storage Area [acre]	Average Area [acre]	Δ Elev [ft]	Δ Vol [ac-ft]	Σ Vol [ac-ft]	$Q_{channel}$ [cfs]	Q_{weir} [cfs]	Total Q_{out} [cfs]
1083	6,594	0.15				0	35.62	0	35.61583
			0.76	1.0	0.76				
1084	59,662	1.37				0.76	120.18	0	120.18
			1.37	2.0	2.74				
1085	112,731	2.59				2.74	229.95	0	229.95
			3.72	1.0	3.72				
1086	211,376	4.85				6.46	355.91	0	355.91
			4.85	2.0	9.71				
1087	310,021	7.12				12.44	493.12	0	493.12
			7.85	1.0	7.85				
1088	373,623	8.58				20.29	638.53	0	638.53
			8.58	2.0	17.15				
1089	437,224	10.04				29.60	790.15	0	790.15
			10.65	1.0	10.65				
1090	490,779	11.27				40.25	946.58	0	946.58
			11.27	2.0	22.53				
1091	544,333	12.50				52.13	1106.82	0	1106.82
			13.12	1.0	13.12				
1092	598,428	13.74				65.25	1270.14	0	1270.14
			13.74	2.0	27.48				
1093	652,523	14.98				79.61	1435.98	0	1435.98
1094		-				94.80	1603.91	0	1603.91
Overtopping									
1094.5		-				103.10	1688.56	0.00	1688.56
1095		-				111.40	1773.60	0.00	1773.6

Notes:

a) Data from Bethany Home Outfall Channel Reach B, Record Drawings, PCN No. 620 03 32, June 2007

b) Volume at elevations 1094 and 1095 from DMJM HEC-1 model update, Nov 2004

c) SE and SV recods taken from PEC model. Calculations above were completed to obtain SQ record values.

Kimley-Horn and Associates, Inc.

Project: ***Glendale Area SMP***
Subject: **Detention Basin Calculations - SRGC53**
Model: **Maryvale**
Designed by: **JSN** Date 12/2/2009 KHA Project No. 091910009
Checked by: **MAF** Date 12/8/2009 City of Glendale No. 089017

Objective: To determine the Stage-Storage-Discharge relationship for regional detention basins

Detention Basin - SRGC53

		Outlet X-Sect Area	7.069 ft^2
Outlet Diameter	3.00 ft	No. of Outlet Barrels	1
Outlet Elevation	1093.84 ft	Outlet Pipe Slope	0.0024 ft/ft
Overflow Weir Length	466 ft	Weir Coefficient	2.7

Elevation [ft]	Surface Storage Area [ft^2]	Surface Storage Area [acre]	Average Area [acre]	Δ Elev [ft]	Δ Vol [ac-ft]	Σ Vol [ac-ft]	Q_{pipe} [cfs]	Q_{weir} [cfs]	Total Q_{out} [cfs]
1094	4,559	0.10				0	0.18	0	0.18008
			1.95	1.0	1.95				
1095	165,130	3.79				1.95	10.35	0	10.34643
			3.92	1.0	3.92				
1096	176,042	4.04				5.86	28.36	0	28.36
			4.17	1.0	4.17				
1097	187,376	4.30				10.04	43.85	0	43.85
			5.19	1.0	5.19				
1098	264,391	6.07				15.22	55.51	0	55.51
			6.93	1.0	6.93				
1099	339,657	7.80				22.15	65.11	0	65.11
			9.58	1.0	9.58				
1100	495,263	11.37				31.74	73.47	0	73.47
			12.83	1.0	12.83				
1101	622,688	14.29				44.57	80.97	0	80.97
			14.93	1.0	14.93				
1102	677,915	15.56				59.50	87.83	0	87.83
			16.09	1.0	16.09				
1103	723,759	16.62				75.59	94.20	0	94.20
Overtopping									
			18.19	1.0	18.19				
1104	884,237	20.30				93.78	100.16	1258.2	1358.36

Notes:

a) Q_{pipe} goes from Mannings Eqn to Orifice Eqn when water surface exceeds 1.2*(Outlet Diameter) per Linsley et al. Water Resources Engineering 4th Edition, pg 652.

b) Stage-storage data was developed from Maryvale Baseball Park Grading and Drainage As-built records, City of Phoenix, 1997

Kimley-Horn and Associates, Inc.

Project: ***Glendale Area SMP***
Subject: **Detention Basin Calculations - SRTM27**
Model: **Maryvale**
Designed by: **MAF** Date 3/18/2010 KHA Project No. 091910009
Checked by: **LAT** Date 5/18/2010 City of Glendale No. 089017

Objective: To determine the Stage-Storage-Discharge relationship for regional detention basins

Detention Basin - SRTM27

		Outlet X-Sect Area	3.142 ft^2
Outlet Diameter	2.00 ft	No. of Outlet Barrels	1
Outlet Elevation	1087.22 ft	Outlet Pipe Slope	0.0423 ft/ft
Overflow Weir Length	500 ft	Weir Coefficient	2.7

Elevation [ft]	Surface Storage Area [ft^2]	Surface Storage Area [acre]	Average Area [acre]	Δ Elev [ft]	Δ Vol [ac-ft]	Σ Vol [ac-ft]	Q_{pipe} [cfs]	Q_{weir} [cfs]	Total Q_{out} [cfs]
1088	10,869	0.25				0	0	0	0
			0.46	1.0	0.46				
1089	29,239	0.67				0.46	49.34	0	49.34
			0.94	1.0	0.94				
1090	52,688	1.21				1.40	20.18	0	20.18
			1.66	1.0	1.66				
1091	91,913	2.11				3.06	25.22	0	25.22
			2.66	1.0	2.66				
1092	139,782	3.21				5.72	29.41	0	29.41
			3.31	1.0	3.31				
1093	148,597	3.41				9.03	33.07	0	33.07
			3.51	1.0	3.51				
1094	157,338	3.61				12.54	36.37	0	36.37
			3.71	1.0	3.71				
1095	166,256	3.82				16.26	39.39	0	39.39
			3.74	1.0	3.74				
1096	177,530	4.08				20.00	42.19	0	42.19
				Overtopping					
			4.08	0.5	2.04				
1096.5	177,530	4.08				22.04	43.53	477.30	520.82
			4.08	1.0	4.08				
1097	177,530	4.08				24.08	44.82	1350.00	1394.8

Notes:

a) Q_{pipe} goes from Mannings Eqn to Orifice Eqn when water surface exceeds 1.2*(Outlet Diameter) per Linsley et al. Water Resources Engineering 4th Edition, pg 652.

b) Stage-storage data was developed from *26th Avenue and Verde Land Drainage Improvement Project Phase II* Plans, City of Phoenix, November 2005.

Kimley-Horn and Associates, Inc.

Project: ***Glendale Area SMP***
Subject: **Detention Basin Calculations - SRGR27**
Model: **Maryvale**
Designed by: **MAF** Date 2/11/2010 KHA Project No. 091910009
Checked by: **LAT** Date 5/18/2010 City of Glendale No. 089017

Objective: To determine the Stage-Storage-Discharge relationship for regional detention basins

Detention Basin - SRGR27

		Outlet X-Sect Area	1.767 ft^2
Outlet Diameter	1.50 ft	No. of Outlet Barrels	1
Outlet Elevation	1084.5 ft	Outlet Pipe Slope	0.0048 ft/ft
Overflow Weir Length	290 ft	Weir Coefficient	2.7

Elevation [ft]	Surface Storage Area [ft^2]	Surface Storage Area [acre]	Average Area [acre]	Δ Elev [ft]	Δ Vol [ac-ft]	Σ Vol [ac-ft]	Q_{pipe} [cfs]	Q_{weir} [cfs]	Total Q_{out} [cfs]
1084	3,514	0.08				0	0	0	0
			0.34	1.0	0.34				
1085	26,047	0.60				0.34	1.74	0	1.74
			1.75	1.0	1.75				
1086	126,371	2.90				2.09	7.28	0	7.28
			3.20	2.0	6.40				
1088	152,479	3.50				8.49	14.11	0	14.11
			3.67	2.0	7.35				
1090	167,617	3.85				15.84	18.54	0	18.54
			4.03	2.0	8.05				
1092	183,072	4.20				23.89	22.11	0	22.11
			4.39	2.0	8.78				
1094	199,177	4.57				32.66	25.17	0	25.17
			4.76	2.0	9.53				
1096	215,769	4.95				42.19	27.90	0	27.90
			5.11	1.0	5.11				
1097	229,313	5.26				47.30	29.17	0	29.17
				Overtopping					
			5.26	0.5	2.63				
1097.5	229,313	5.26				49.93	29.78	276.83	306.61
			5.26	0.5	2.63				
1098	229,313	5.26				52.56	30.38	783.00	813.38
			5.26	1.0	5.26				
1098.5	229,313	5.26				57.83	30.97	1438.46	1469.4

Notes:

a) Q_{pipe} goes from Mannings Eqn to Orifice Eqn when water surface exceeds 1.2*(Outlet Diameter) per Linsley et al. Water Resources Engineering 4th Edition, pg 652.

b) Stage-Storage data developed from *State Highway Wickenburg-Phoenix Highway (US 60), 27th Avenue/Thomas Road* As-built Records, ADOT, August 2006.

Kimley-Horn and Associates, Inc.

Project: ***Glendale Area SMP***
Subject: **Detention Basin Calculations - SRMD99**
Model: **Maryvale**
Designed by: **MAF** Date 2/16/2010 KHA Project No. 091910009
Checked by: **LAT** Date 5/18/2010 City of Glendale No. 089017

Objective: To determine the Stage-Storage-Discharge relationship for regional detention basins

Detention Basin - SRMD99

Weir Coefficient 2.7

Elevation [ft]	Surface Storage Area [ft^2]	Surface Storage Area [acre]	Average Area [acre]	Δ Elev [ft]	Δ Vol [ac-ft]	Σ Vol [ac-ft]	Weir Length [ft]	Q_{pipe} [cfs]	Q_{weir} [cfs]	Total Q_{out} [cfs]
1022	435,307	9.99				0		0	0	0
			11.86	1.0	11.86		0.00			
1023	597,905	13.73				11.86		0.00	0	0.00
			15.59	1.0	15.59		0.00			
1024	760,503	17.46				27.45		0.00	0	0.00
				Overtopping						
			22.02	0.5	11.01					
1024.5	1,157,735	26.58				38.46	1680	0.00	1603.72	1603.72
			31.14	0.5	15.57					
1025	1,554,966	35.70				54.03	2700	0.00	7290.00	7290.00
			44.82	1.0	44.82					
1026	2,349,429	53.94				98.85	3720	0.00	28,408.72	28,408.7

Notes:

a) Stage-storage data developed using topography obtained from FCDMC.

Kimley-Horn and Associates, Inc.

Project: ***Glendale Area SMP***
Subject: **Detention Basin Calculations - SRINLO**
Model: **Maryvale**
Designed by: **MAF** Date 2/16/2010 KHA Project No. 091910009
Checked by: **LAT** Date 5/18/2010 City of Glendale No. 089017

Objective: To determine the Stage-Storage-Discharge relationship for regional detention basins

Detention Basin - SRINLO

		Outlet X-Sect Area	9.621 ft^2
Outlet Diameter	3.50 ft	No. of Outlet Barrels	1
Outlet Elevation	1002.29 ft	Outlet Pipe Slope	0.002 ft/ft
		Weir Coefficient	2.7

Elevation [ft]	Surface Storage Area [ft^2]	Surface Storage Area [acre]	Average Area [acre]	Δ Elev [ft]	Δ Vol [ac-ft]	Σ Vol [ac-ft]	Weir Length [ft]	Q_{pipe} [cfs]	Q_{weir} [cfs]	Total Q_{out} [cfs]
1002.3	-	-				0		0	0	0
			7.03	2.2	15.47		11			
1004.5	612,500	14.06				15.47		32.63	0	32.63
			16.91	11.3	191.05		850			
1015.8	860,468	19.75				206.52		158.86	0	158.86
				Overtopping						
			19.80	0.2	3.96					
1016	864,857	19.85				210.48	855	160.21	206.42	366.63
			19.98	0.5	9.99					
1016.5	875,829	20.11				220.47	867	163.52	1370.45	1533.97
			20.48	1.5	30.73					
1018	908,745	20.86				251.20	902	173.09	7950.38	8123.46
			21.37	2.0	42.73					
1020	952,634	21.87				293.93	950	185.07	22,078.08	22,263.2

Notes:

a) Q_{pipe} goes from Mannings Eqn to Orifice Eqn when water surface exceeds 1.2*(Outlet Diameter) per Linsley et al. Water Resources Engineering 4th Edition, pg 652.

b) Stage-Storage data obtained from *State Highway Agua Fria Freeway (101L) Agua Fria - (Encanto Blvd. to Camelback Rd.)* , As-built Records, ADOT, 2001.

Appendix F Typical Street and Channel Sections

Typical Channel Sections Summary

Typical Street Sections Summary

City of Glendale Typical Street Sections

City of Phoenix Typical Street Sections

City of Peoria Typical Street Sections

Kimley-Horn and Associates, Inc.

Project: ***Glendale Stormwater Management Plan***
Subject: **Typical Channel Sections**
Model: **Maryvale**
Designed by: **BML** Date 11/17/2009 KHA Project No. 091910009
Checked by: **MAF** Date 11/18/2009 City of Glendale No. 089017

Maryvale Typical Channel Sections

Channel Size	Abbrev.	X1	X2	X3	X4	X5	X6	X7	X8	Y1	Y2	Y3	Y4	Y5	Y6	Y7	Y8
Interstate 10	IN_10	0	0.1	18	36	66	84	102	102.1	18	17.05	9	0	0	9	17.05	18
Loop 101 A	LO_A	0	3	5	39	47	51	65	68	18	17	17	0	0.16	17.16	17.44	18.44
Loop 101 B	LO_B	0	4	14	29	44	59	73	76	11.2	10.2	10	0	0.3	10.3	10.58	11.58
Loop 101 C	LO_C	0	4	14	29	49	64	94	97	11.2	10.2	10	0	0.4	10.4	11.84	12.84
Loop 101 D	LO_D	0	4	16	23	33	40	52	55	4.74	3.74	3.5	0	0.2	3.7	3.94	4.94
Loop 101 E	LO_E	0	4	16	34	57	74	86	89	10.24	9.24	9	0	0.2	8.7	8.97	9.94
Loop 101 F	LO_F	0	4	16	26	34	44	56	59	6.24	5.24	5	0	0.2	5.2	5.44	6.44
Loop 101 G	LO_G	0	3	13	29.5	59.5	76	86	89	12	11	11	0	0	11	11	12
Loop 101 H	LO_H	0	3	13	33	63	83	93	96	11	10	10	0	0	10	10	11
Loop 101 I	LO_I	0	3	13	25	35	47	57	60	7	6	6	0	0	6	6	7
Loop 101 J	LO_J	0	3	13	35	50	72	82	85	12	11	11	0	0	11	11	12
Loop 101 K	LO_K	0	3	13	29	39	55	65	68	9	8	8	0	0	8	8	9
Loop 101 L	LO_L	0	3	13	29	39	45	55	56	9	8	8	0	0	8	8	9
Loop 101 M	LO_M	0	3	13	22	30	39	49	58	10	9	9	0	0	9	9	10
Bethany Home Outfall Channel A	BHOC_A	0	4	18	46.5	135.5	153.4	167.4	171.4	8.265	7.265	7.125	0	0.85	5.325	5.465	6.465
Bethany Home Outfall Channel B	BHOC_B	0	4	18	66	126	162	172	176	13.14	12.14	12	0	0.6	9.15	9.25	10.25
Bethany Home Outfall Channel C	BHOC_C	0	3	13	13	31	31	41	44	10	9	9	0	0	9	9	10

Notes:
-Loop 101 A is located south of Encanto Blvd (As-Builts)
-Loop 101 B is located from Encanto to Thomas (As-Builts)
-Loop 101 C is located from Thomas to Camelback Road (As-Builts)
-Loop 101 D is located from Camelback Road to Bethany Home Road (As-Builts)
-Loop 101 E is located from Bethany Home Road to Glendale Avenue (As-Builts)
-Loop 101 F is located from Glendale Avenue to Northern Avenue (As-Builts)
-Loop 101 G is located from Northern Avenue to Olive Avenue (As-Builts)
-Loop 101 H is located from Olive Avenue to Peoria Avenue (As-builts)
-Loop 101 I is located from Peoria Avenue (As-Builts)
-Loop 101 J is located from Peoria Avenue to Grand Avenue (As-Builts)
-Loop 101 K is located from Grand Avenue to Thunderbird Road (As-Builts)
-Loop 101 L is located at Thunderbird Road (As-Builts)
-Loop 101 M is located at Bell Road (As-Builts)
-Bethany Home Outfall Channel A is located from 99th Avenue to 91st Avenue (As-Builts)
-Bethany Home Outfall Channel B is located from 91st Avenue to 83rd Avenue (As-Builts)
-Bethany Home Outfall Channel C is located from 83rd Avenue to 73rd Avenue (As-Builts)
-Interstate 10 typical channels are from the HEC-1 results from the Maryvale ADMP

Kimley-Horn and Associates, Inc.

Project: ***Glendale Stormwater Management Plan***
Subject: **Typical Channel Sections**
Model: **Glendale/Peoria**
Designed by: **BML** Date 11/17/2009
Checked by: **AOM** Date 1/18/2010

KHA Project No. 091910009
City of Glendale No. 089017

Glendale/Peoria Typical Channel Sections

Channel Size	Abbrev.	Width (ft)				Depth	RX values								RY values							
		Total	Channel	LOB	ROB	(ft)	X1	X2	X3	X4	X5	X6	X7	X8	Y1	Y2	Y3	Y4	Y5	Y6	Y7	Y8
Extra Large	XL	800	110	345	345	15	0	0	345	375	425	455	800	800	17.4	16.4	15	0	0	15	16.4	17.4
Large	L	175	65	55	55	10	0	0	55	75	100	120	175	175	11.2	10.2	10	0	0	10	10.2	11.2
Medium	M	110	30	40	40	5	0	0	40	50	60	70	110	110	6.2	5.2	5	0	0	5	5.2	6.2
Small	S	55	17	19	19	3	0	0	19	25	30	36	55	55	4.1	3.1	3	0	0	3	3.1	4.1
115th Avenue Channel	115	580	67	256.5	256.5	NA	0	100	112	147	159	179	214	580	8	6	0	0	6	7	7	9
Union Hills Channel A	UH_A	640	42	299	299	NA	0	50	62	72	84	104	139	640	9	6	0	0	6	7	7	9
Union Hills Channel B	UH_B	689	42	323.5	323.5	NA	0	100	112	122	134	154	189	689	8	6	0	0	6	7	7	9
Union Hills Channel C	UH_C	109	70	19.5	19.5	NA	0	1	13	23	53	83	108	109	14	6	0	0	6	6	7	15
Beardsley Channel	BY	648	107	270.5	270.5	NA	0	1	16	36	51	123	148	648	16	8	0	0	8	8	9	11
Rock Springs Wash A	RS_A	800	47	376.5	376.5	NA	0	256	372	397	407	419	464	800	12	10	8	0	0	6	8	12
Rock Springs Wash B	RS_B	1121	109	506	506	NA	0	480	500	518	544	609	900	1121	11	10	0	0.2	10	11	12	13
Loop 101	LO	70	60	5	5	NA	0	3	5	29	41	65	67	70	13	12	12	0	0	12	12	13

Notes:

Typical channel sizes estimated from aerial photographs, topographic data, and field visits.

- 115th Avenue Channel is located from Union Hills to Bell Road and includes the street in the cross section (Route RA07D from the Northwest Region Update, 2007)
- Union Hills Channel A is located from 113th Avenue to 115th Avenue (Route RA07C from the Northwest Region Update, 2007)
- Union Hills Channel B is located from 111th Avenue to 113th Avenue (Route RA07E from the Northwest Region Update, 2007)
- Union Hills Channel C is located from 107th Avenue to 111th Avenue (Route RA07F from the Northwest Region Update, 2007)
- Beardsley Channel is located from 99th Avenue to 107th Avenue (Routes RA09FW and RA09E from the Northwest Region Update, 2007)
- Rock Springs Wash A is located from Pinnacle Peak Road to Patrick Lane alignment (Route RN24G from the Northwest Region Update, 2007)
- Rock Springs Wash B is located from Happy Valley Road to Pinnacle Peak Road (Routes RN24I and RN24G* from the Northwest Region Update, 2007)
- Loop 101 is the channel located from Beardsley Road to Loop 101 and is from ADOT asbuilts

Kimley-Horn and Associates, Inc.

Project: ***Glendale Stormwater Management Plan***
Subject: **Typical Street Sections**
Designed by: **MAF** Date 8/20/2009 KHA Project No. 091910009
Checked by: **AOM** Date 11/9/2009 City of Glendale No. 089017

City of Glendale Typical Street Sections

Street Designation			Width (ft)			
Type	Detail	Section	ROW	Street	LOB	ROB
Arterial	G-302	A-1	110	69	20.5	20.5
Arterial	G-302	A-2	110	69	20.5	20.5
Arterial	G-303	A-3	120	79	20.5	20.5
Major Arterial	G-303	A-4	130	95	17.5	17.5
Glendale Avenue[1]	NA	A-5	130	92	19	19
Collector	G-304	C-1	70	36	17	17
Collector	G-304	C-2	60	40	10	10
Collector	G-305	C-3	70	44	13	13
Collector	G-305	C-4	70	48	11	11
Collector - average[2]	NA*	C-X	68	42	13	13
Local	G-306	L	50	36	7	7

Notes:

Taken from City of Glendale *Standard Details*, 2002.

1. Typical Section taken from West Glendale Avenue Design Plan.
2. Collector - average is an average of the City of Glendale Collector Street typical details G-304 and G-305, Collector Sections C-1 thru C-4.

Typical Street Sections used outside of the City of Glendale

Street Designation			Width (ft)			
Type	Detail	Section	ROW	Street	LOB	ROB
Arterial	P1010	A	140	104	18	18
Arterial	P1010	B	110	74	18	18
Arterial	P1010	C	130	94	18	18
Major Arterial	PE-010-2		130	104	13	13
Minor Arterial	PE-010-3		110	78	16	16
Arterial - average[1]	**NA**		**124**	**91**	**17**	**17**
Collector	P1013	D	100	64	18	18
Collector	P1013	E	80	50	15	15
Collector	P1013	F	60	40	10	10
Major Collector	PE-010-4		80	64	8	8
Minor Collector	PE-010-5		60	36	12	12
Minor Collector	PE-010-5		70	48	11	11
Collector - average[1]	**NA**		**75**	**50**	**12**	**12**
Local	P1014	G	50	36	7	7
Local	P1014	H	50	32	9	9
Local	P1014	I	50	28	11	11
Local	PE-010-6		50	26	12	12
Local - average[1]	**NA**		**50**	**31**	**10**	**10**

Notes:

Taken from City of Phoenix and City of Peoria *Standard Details*.

1. The average is an average of the City of Phoenix and City of Peoria typical sections for each street type. These average values were used for all areas outside of the City of Glendale.

STANDARD DETAIL G-300

CITY OF GLENDALE
TRANSPORTATION

ARTERIAL STREET SECTION AND RIGHT-OF-WAY MAP

GLENDALE

LEGEND

- TWO/TWO LANE CONFIGURATION WITH CENTER LANE SEE ARTERIAL SECTION A-1
- THREE/TWO LANE CONFIGURATION SEE ARTERIAL SECTION A-2
- THREE/TWO LANE CONFIGURATION SEE ARTERIAL SECTION A-3
- THREE/THREE LANE CONFIGURATION WITH MEDIAN SEE ARTERIAL SECTION A-4

SPECIAL SECTIONS

- FOUR /FOUR LANE CONFIGURATION WITH MEDIAN (REFER TO NORTH VALLEY SPECIFIC PLAN)
- TWO/TWO LANE CONFIGURATION WITH MEDIAN (REFER TO DESIGN PLANS)
- THREE/THREE LANE CONFIGURATION WITH MEDIAN (REFER TO DESIGN PLANS)
- THREE/THREE LANE CONFIGURATIONS WITH MEDIAN (REFER TO GLENDALE AVENUE PLAN)
- THREE/TWO LANE CONFIGURATION WITH MEDIAN (REFER TO DESIGN PLANS)
- SUPER STREET

ARTERIAL RIGHT-OF-WAY REQUIRED

SECTION A-1 = 110' ROW (AT INTERSECTIONS 110')
SECTION A-2 = 110' ROW (AT INTERSECTIONS 120')
SECTION A-3 = 120' ROW (AT INTERSECTIONS 130')
SECTION A-4 = 130' ROW (AT INTERSECTIONS 150')

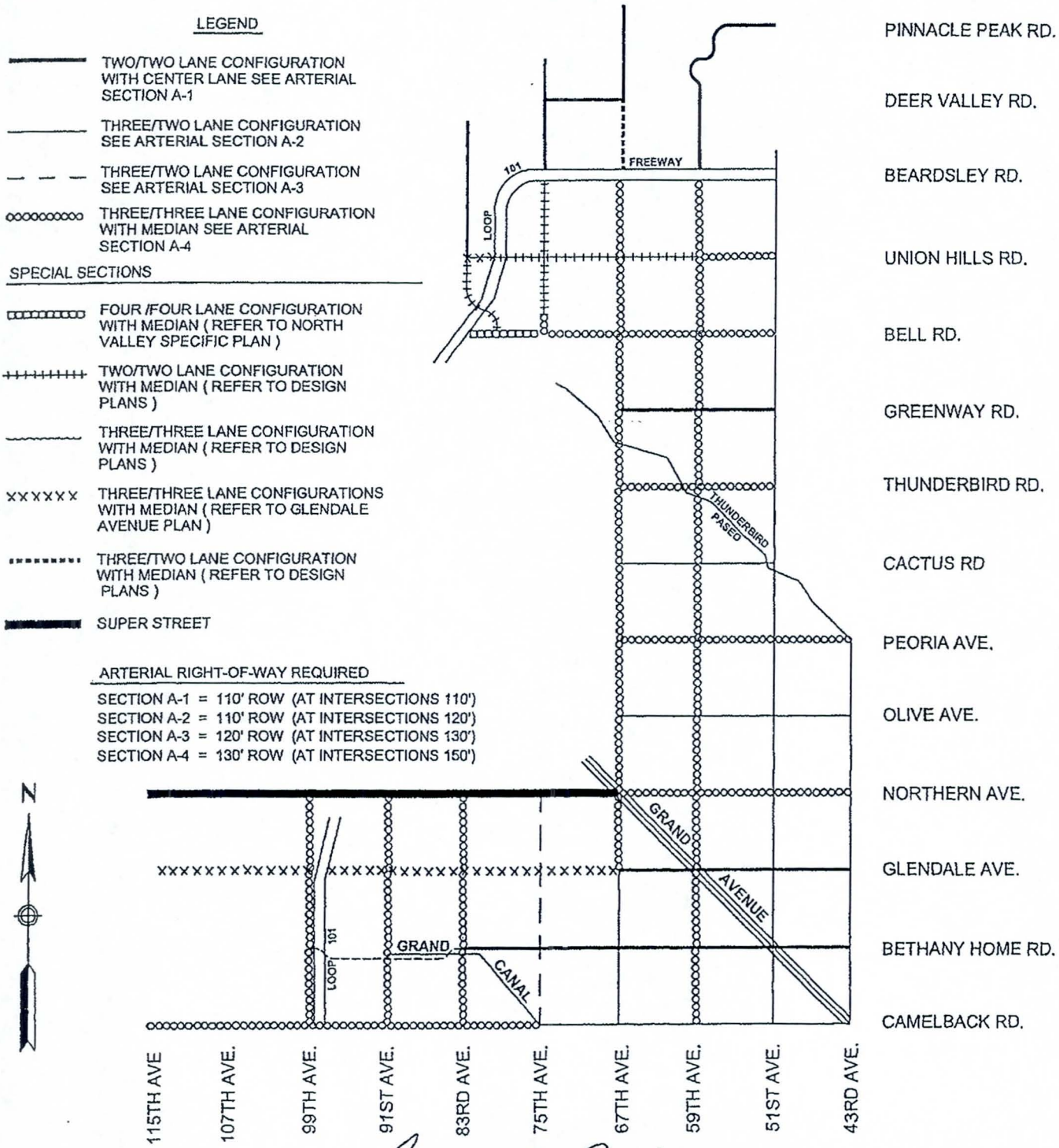

APPROVED BY: James A. Book 6-29-02
TRANSPORTATION DIRECTOR DATE

REVISED: JUNE 2002

PREVIOUS:

STANDARD DETAIL G-302

CITY OF GLENDALE
ENGINEERING

GLENDALE

ARTERIALS W/4 LANES AND TURN LANES
MAJOR ARTERIALS W/6 LANES

ARTERIAL SECTION A-1
(SEE PARA. 4.12.A.)

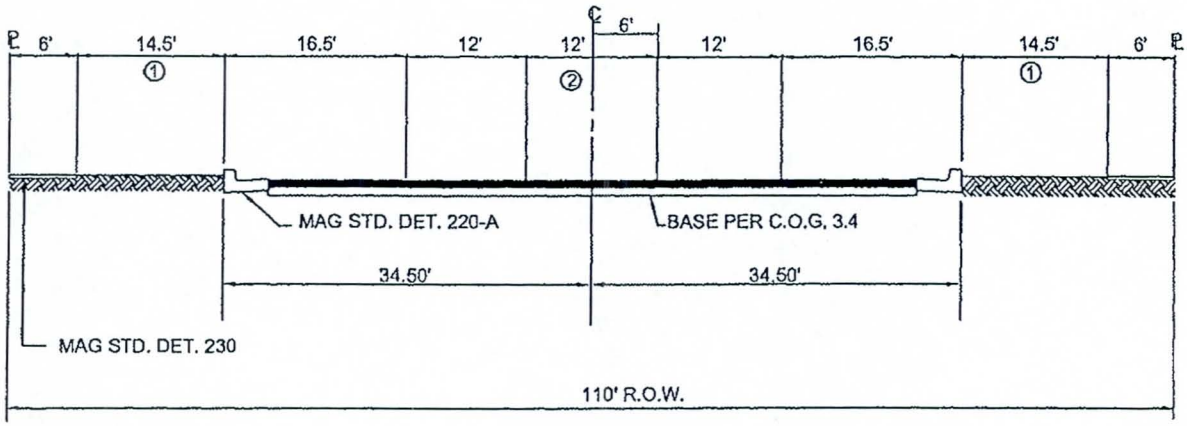

① VARIES, 7 FOOT MINIMUM FOR LANDSCAPING.
② CENTER TURN LANE; 12 FOOT MEDIAN IS OPTIONAL ON ARTERIALS AND MANDATORY ON MAJOR ARTERIALS.

ARTERIAL SECTION A-2
(SEE PARA. 4.12.B.)

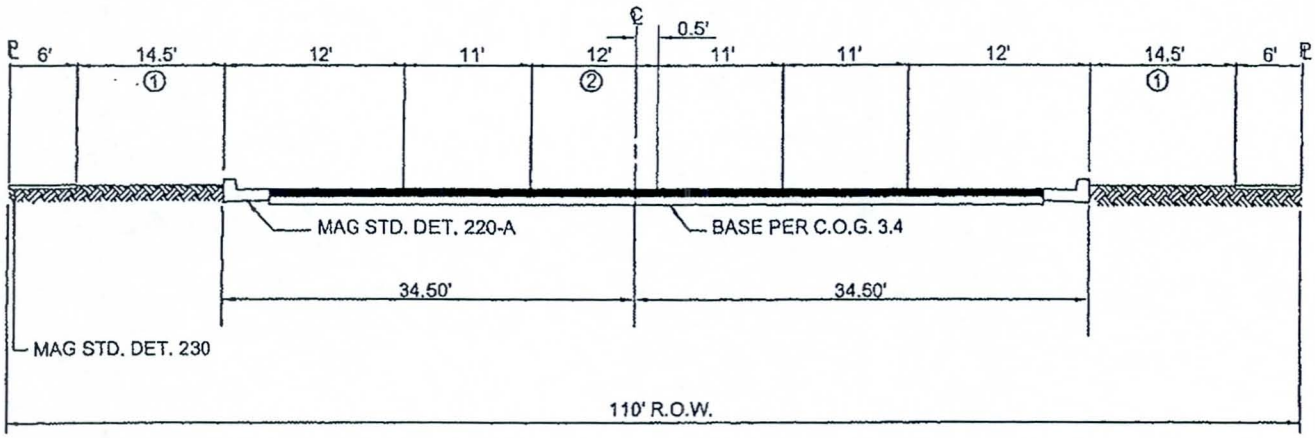

① VARIES, 7 FOOT MINIMUM FOR LANDSCAPING.
② CENTER TURN LANE; 12 FOOT MEDIAN IS OPTIONAL ON ARTERIALS AND MANDATORY ON MAJOR ARTERIALS.

APPROVED BY: Larry J Crosby
CITY ENGINEER

6/28/02
DATE

REVISED : JUNE 2002
PREVIOUS :

STANDARD DETAIL G-303

CITY OF GLENDALE
ENGINEERING

ARTERIALS OR MAJOR ARTERIALS

ARTERIAL SECTION A-3
(SEE PARA. 4.12.C.)

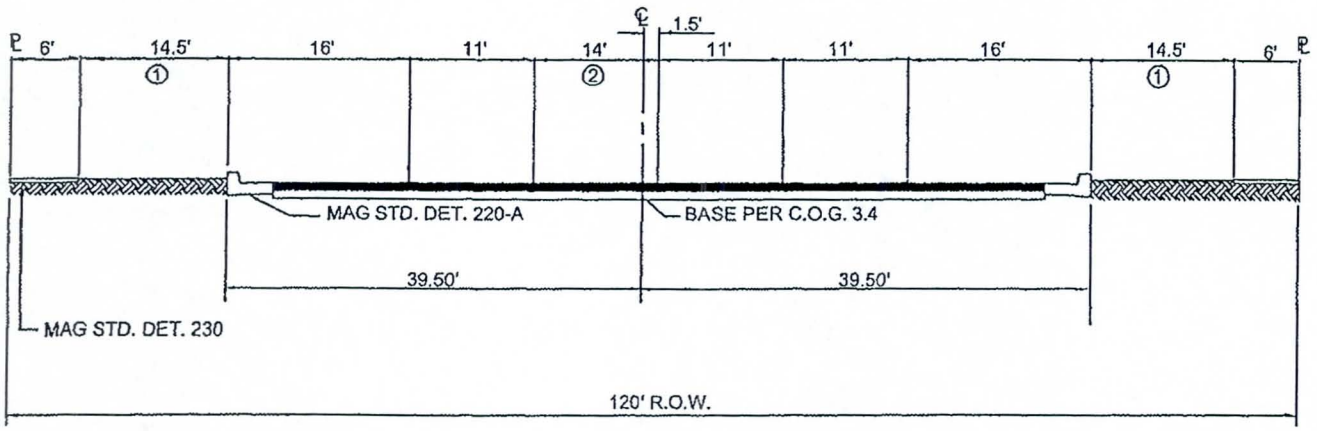

① VARIES, 7 FOOT MINIMUM FOR LANDSCAPING.
② CENTER TURN LANE; 15 FOOT RAISED MEDIAN MAY BE REQUIRED BY CITY OF GLENDALE ON ARTERIALS AND MANDATORY ON MAJOR ARTERIALS

MAJOR ARTERIAL SECTION A-4
(SEE PARA. 4.12.D.)

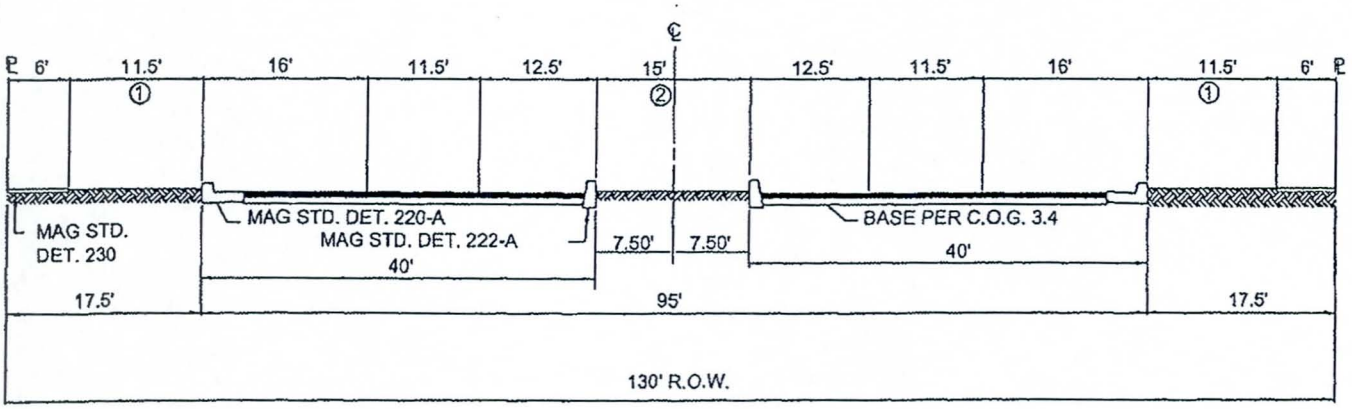

① VARIES, 7 FOOT MINIMUM FOR LANDSCAPING.
② RAISED MEDIAN IS REQUIRED ON MAJOR ARTERIALS.

APPROVED BY: Harry J Brooks
CITY ENGINEER

6/28/02
DATE

REVISED : JUNE 2002

STANDARD DETAIL G-304

CITY OF GLENDALE
ENGINEERING

GLENDALE

STANDARD SINGLE FAMILY RESIDENTIAL COLLECTOR STREETS

COLLECTOR SECTION C-1
(SEE PARA. 4.14.A.)

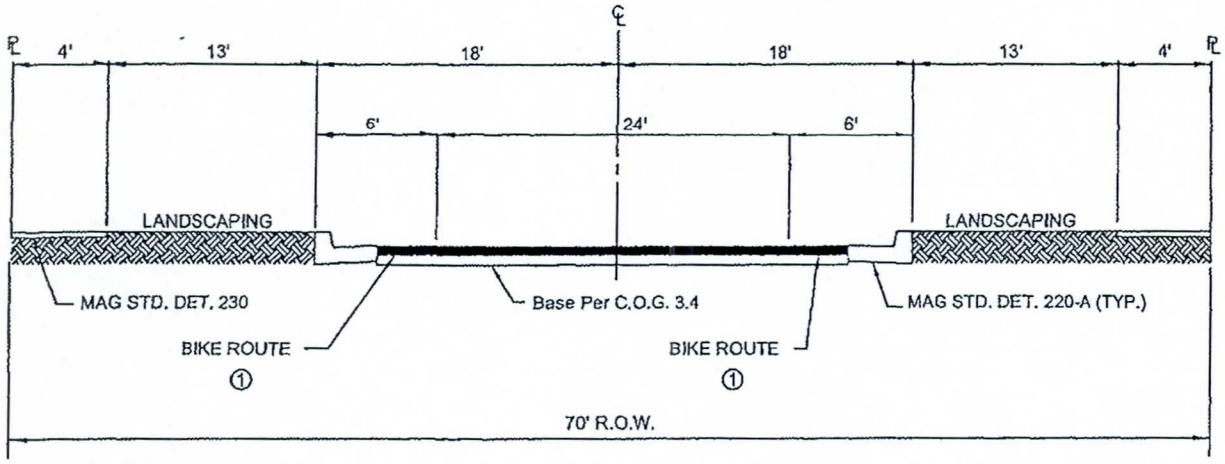

① OPTIONAL; AS REQUIRED BY THE ADOPTED BIKE PLAN OR CITY TRANSPORTATION DIRECTOR.

COLLECTOR SECTION C-2
(SEE PARA. 4.14.B.)

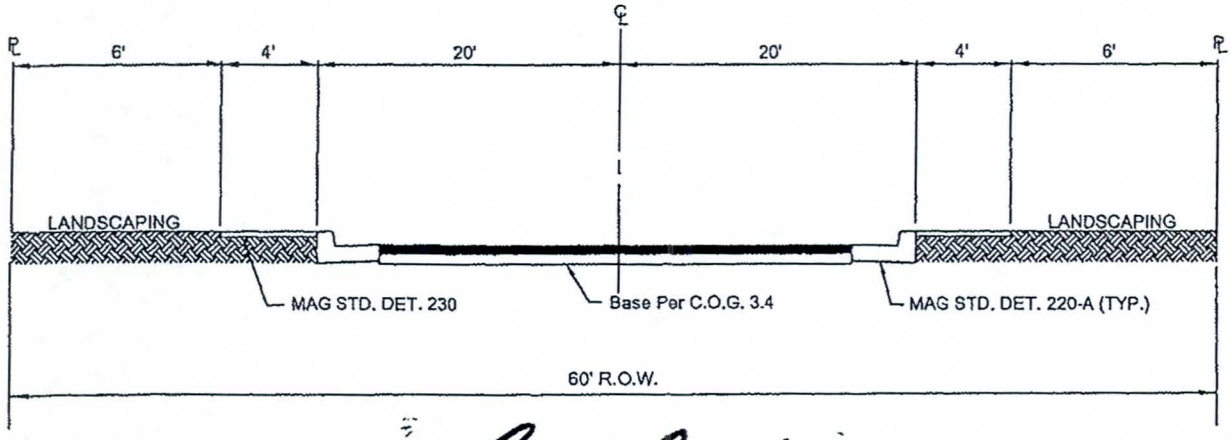

APPROVED BY: Harry J Brooks
CITY ENGINEER

6/28/02
DATE

REVISED : JUNE 2002
PREVIOUS :

STANDARD DETAIL G-305

CITY OF GLENDALE
ENGINEERING

GLENDALE

STANDARD COMMERCIAL/INDUSTRIAL/ MULTIFAMILY COLLECTOR STREETS

COLLECTOR SECTION C-3

(SEE PARA. 4.14.C.)

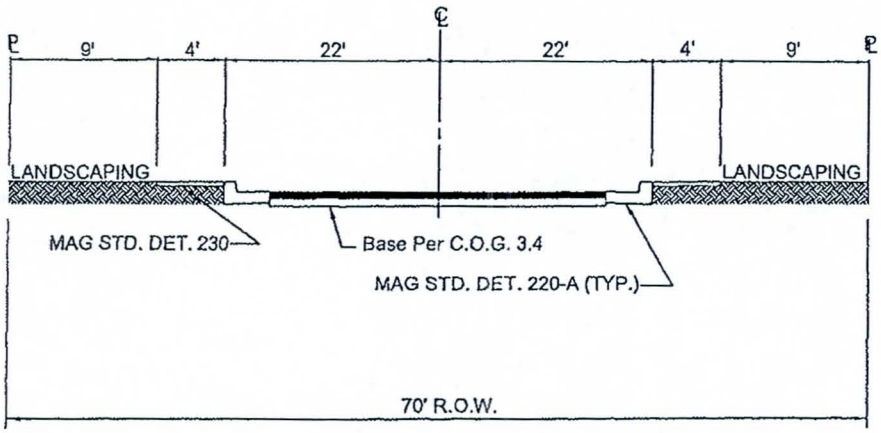

COLLECTOR SECTION C-4

(SEE PARA. 4.14.D.)

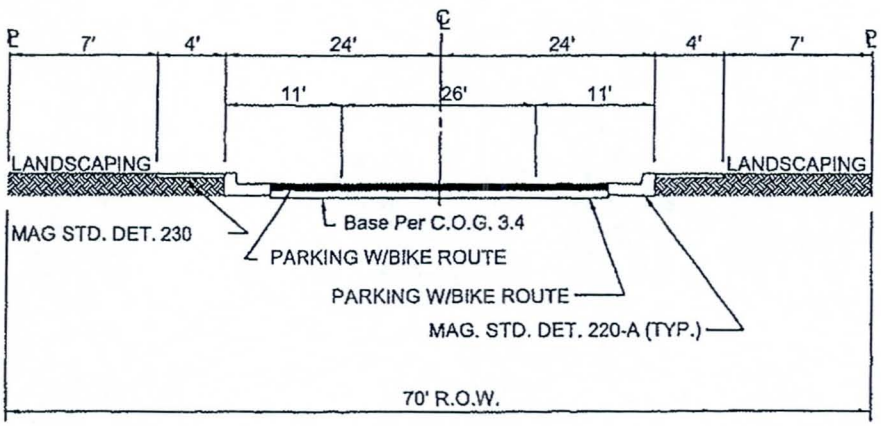

APPROVED BY: Harry J. Brooks
CITY ENGINEER

6/28/02
DATE

REVISED : JUNE 2002

PREVIOUS :

STANDARD DETAIL G-306

CITY OF GLENDALE
ENGINEERING

LOCAL STREET SECTION

LOCAL SECTION
(SEE PARA. 4.16)

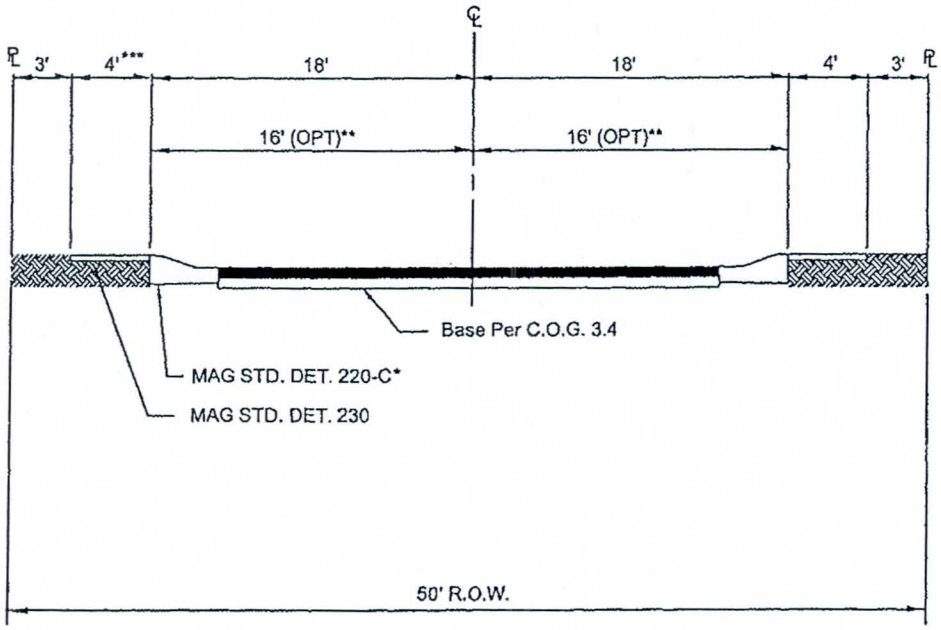

* MAY USE MAG 220-A IF REQUIRED TO SATISFY DRAINAGE REQUIREMENTS.

** REDUCED PAVEMENT WIDTH MAY BE ALLOWED IN SINGLE FAMILY RESIDENTIAL AREAS IF APPROVED IN WRITING BY THE CITY ENGINEER AND CITY TRANSPORTATION DIRECTOR.

*** SIDEWALK MAY BE DETACHED 3' BACK OF CURB IF REQUIRED

APPROVED BY: Harry J. Brooks
CITY ENGINEER

6/28/02
DATE

REVISED: JUNE 2002
PREVIOUS:

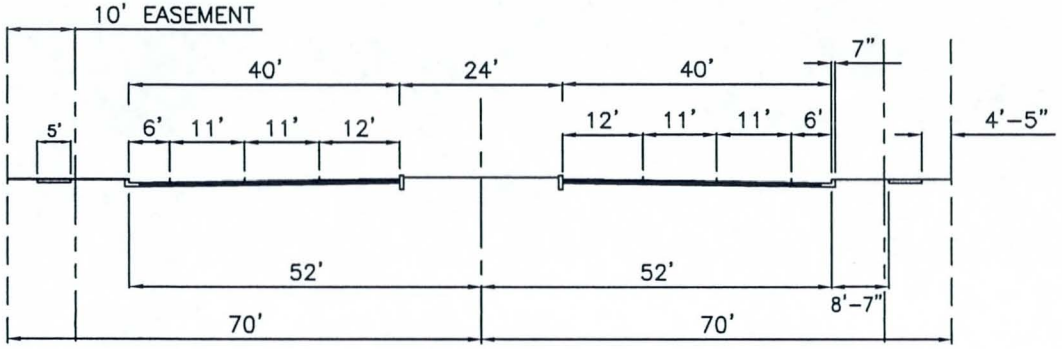

CROSS SECTION A

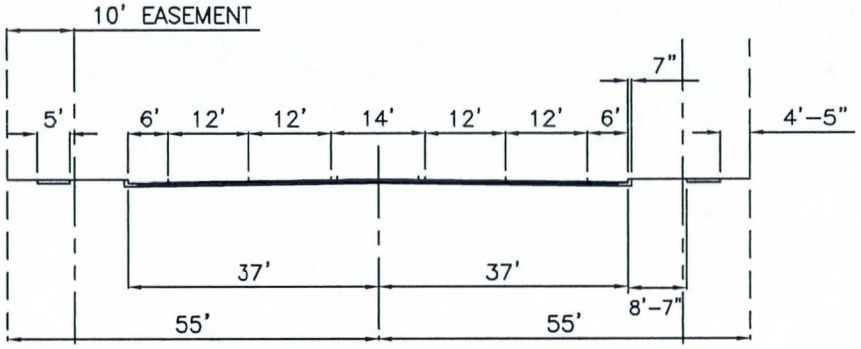

CROSS SECTION C

CROSS SECTION C-M. (SEE NOTE 3)

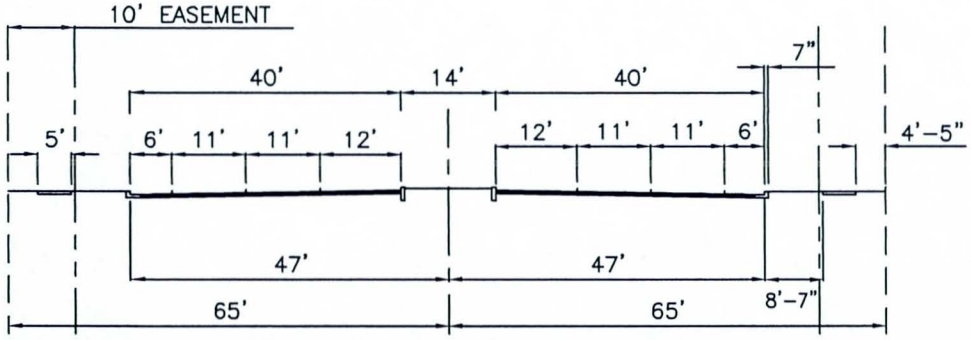

CROSS SECTION B

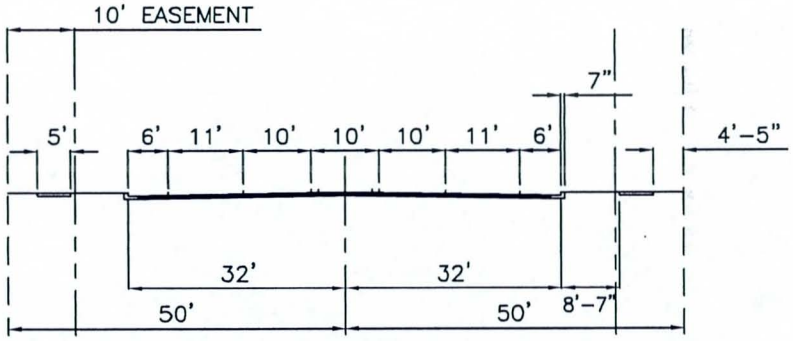

CROSS SECTION D

NOTES:

1. TEN (10) FOOT EASEMENTS MAY BE ALLOWED IN LIEU OF RIGHT-OF-WAY ON CROSS SECTIONS A, B, C, D, AT THE DISCRETION OF THE STREET TRANSPORTATION DEPARTMENT OR DEVELOPMENT SERVICES DEPARTMENT.
2. ADDITIONAL RIGHT-OF-WAY MAY BE REQUIRED FOR DRAINAGE, UTILITIES, SLOPE RIGHTS, IRRIGATION FACILITIES OR TRAILS.**
3. CROSS SECTION "C" HAS A 14' TWO WAY LEFT TURN LANE.
   CROSS SECTION C-M HAS A 14' RAISED MEDIAN.

** ACCORDING TO THE TRAILS PLAN, A - 10 FOOT SIDEWALK MAY BE REQUIRED ON CROSS SECTIONS A,B,C,D,E,F, & G.

ALL DIMENSIONS ARE TO THE FACE OF CURB.

DETAIL NO.	City of Phoenix STANDARD DETAIL	MINIMUM ARTERIAL STREET CROSS SECTION	APPROVED Mario Saldamando CITY ENGINEER	2-11-02 DATE	DETAIL NO.
P1010					P1010

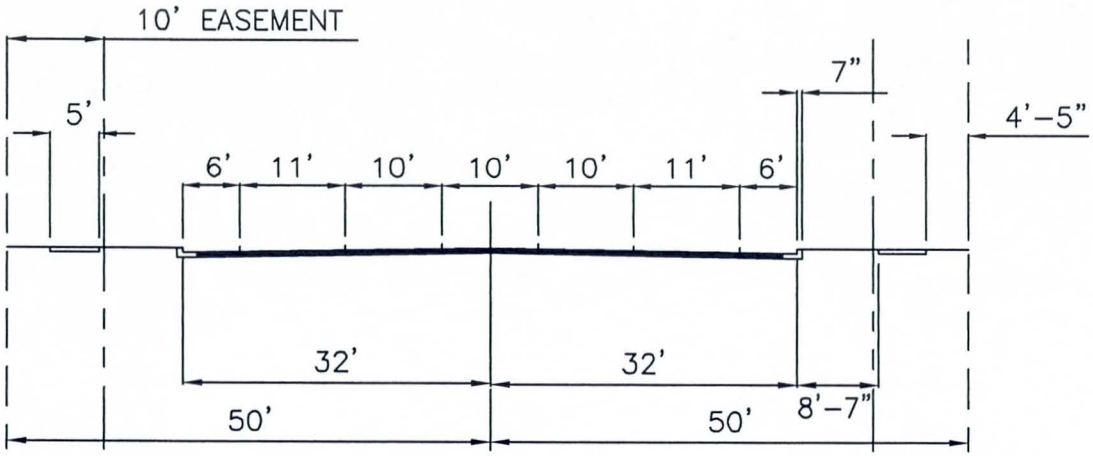

CROSS SECTION D

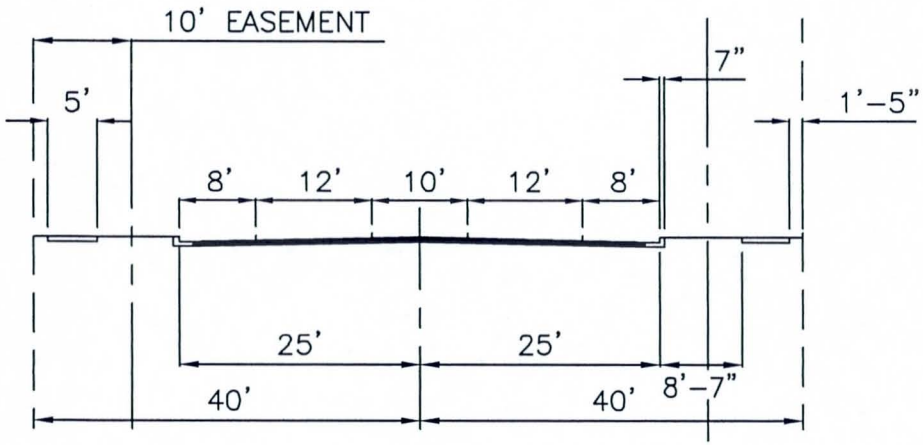

CROSS SECTION E

NOTES:

TEN (10) FOOT EASEMENTS MAY BE ALLOWED IN LIEU OF RIGHT-OF-WAY ON CROSS SECTIONS A, B, C, D, AND E; AT THE DISCRETION OF THE STREET TRANSPORTATION DEPARTMENT OR DEVELOPMENT SERVICES DEPARTMENT.

ADDITIONAL RIGHT-OF-WAY MAY BE REQUIRED FOR DRAINAGE, UTILITIES, SLOPE RIGHTS, IRRIGATION FACILITIES OR TRAILS.

ALL DIMENSIONS ARE TO THE FACE OF CURB.

FINAL LANE CONFIGURATION AND WIDTHS TO BE DETERMINED BY STREET TRANSPORTATION. LANE WIDTHS SHOWN ARE FOR INFORMATION ONLY AND MAY NOT REFLECT APPROVED STRIPING PLANS.

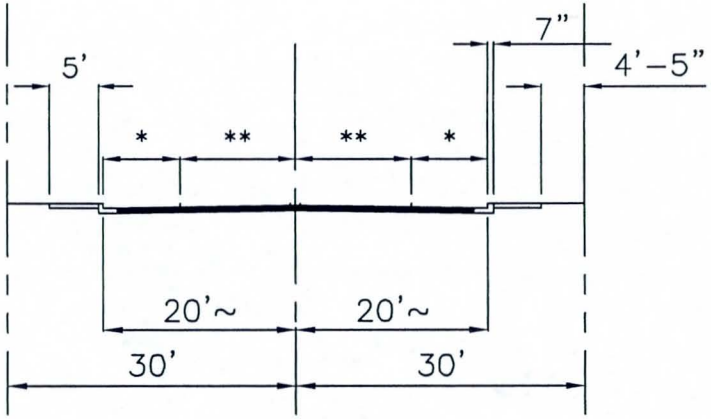

CROSS SECTION F

* 6' or 8' VARIES

** 12' or 14' VARIES

~ COLLECTORS WITH RESIDENTIAL BACKUP TREATMENT ONLY.

DETAIL NO.					DETAIL NO.
P1013	City of Phoenix STANDARD DETAIL	MINIMUM COLLECTOR STREET CROSS SECTION	APPROVED Mario Saldamando FOR CITY ENGINEER	2-11-02 DATE	P1013

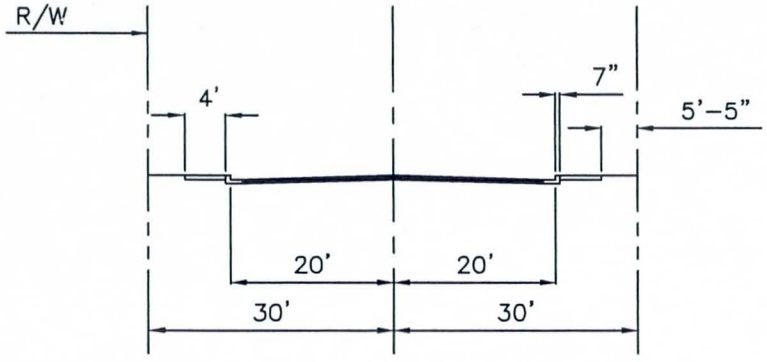

CROSS SECTION F

INDUSTRIAL LAND USE
VERTICAL CURB AND ADJACENT SIDEWALK

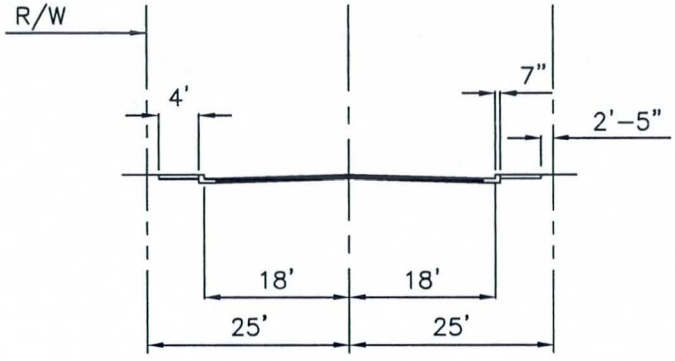

CROSS SECTION G

COMMERCIAL & MULTI FAMILY
RESIDENTIAL LAND USE
VERTICAL CURB AND ADJACENT SIDEWALK

NOTES:

ADDITIONAL RIGHT-OF-WAY MAY BE REQUIRED FOR DRAINAGE, UTILITIES, SLOPE RIGHTS, IRRIGATION FACILITIES, OR TRAILS.

ALL DIMENSIONS ARE TO THE FACE OF CURB.

ALL CURBS ARE VERTICAL UNLESS NOTED.

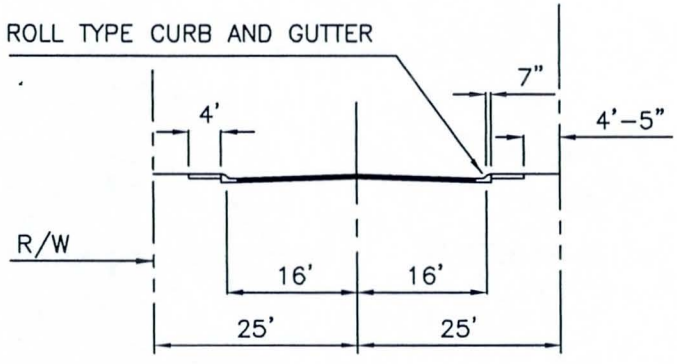

CROSS SECTION H

SINGLE FAMILY RESIDENTIAL LAND USE

OPTION A:
ROLL CURB AND ADJACENT SIDEWALK

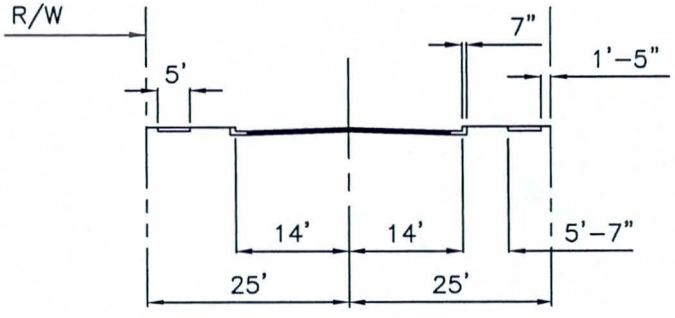

CROSS SECTION I

SINGLE FAMILY RESIDENTIAL LAND USE

OPTION B:
VERTICAL CURB AND SET BACK SIDEWALK

DETAIL NO.	City of Phoenix STANDARD DETAIL	MINIMUM LOCAL STREET CROSS SECTIONS	APPROVED Mario Saddamando FOR CITY ENGINEER	2-11-02 DATE	DETAIL NO.
P1014					P1014

CITY OF PEORIA
STANDARD DETAIL PE-010-2
MAJOR ARTERIAL STREET

APPROVALS: _____ 8/2/07 _____ 8-16-07

CITY ENGINEER DATE FIRE CHIEF DATE

MULTI-LANE ROADWAY 130' ROW
Divided – 6 Travel Lanes
(6-Plus Right and Left Turn Lanes)

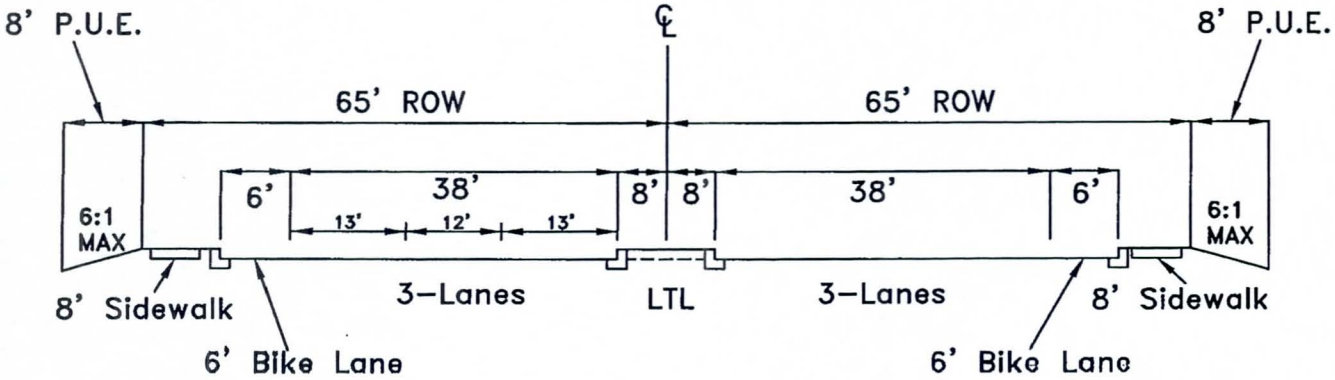

Notes:

- At intersections, ROW increases to 150' for the first 500', measured from the centerline of the intersection.
- Additional R.O.W. may be required where additional turn lanes are required.
- Sidewalks shall be meandering.

I:\GUI AILS\CAD\PE-010-2

08/16/2007

CITY OF PEORIA
STANDARD DETAIL PE-010-3
MINOR ARTERIAL STREET

APPROVALS:

CITY ENGINEER | DATE | FIRE CHIEF | DATE 8-16-07

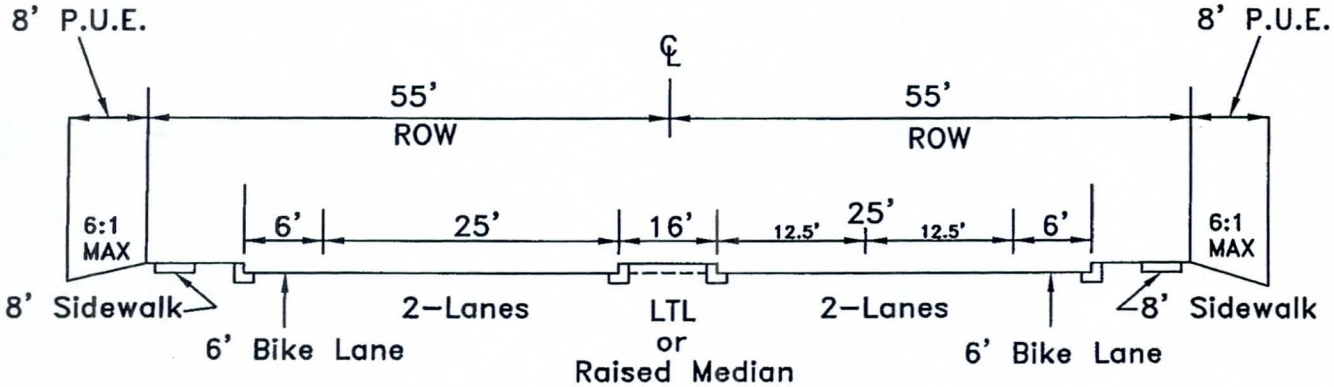

Notes:

- At intersections, ROW increases to 130' for the first 500', measured from the centerline of the intersection.
- Additional ROW may be required where additional turn lanes are needed.
- Sidewalks shall be meandering.

I:\GUI TAILS\CAD\PE-010-3

08/16/2007

CITY OF PEORIA
STANDARD DETAIL PE-010-4
MAJOR COLLECTOR ROADWAY

APPROVALS:

CITY ENGINEER	DATE	FIRE CHIEF	DATE
	8/16/07		8-16-07

FOUR-LANE ROADWAY
Undivided
(Residential areas with backage and adjacent commercial and industrial areas)

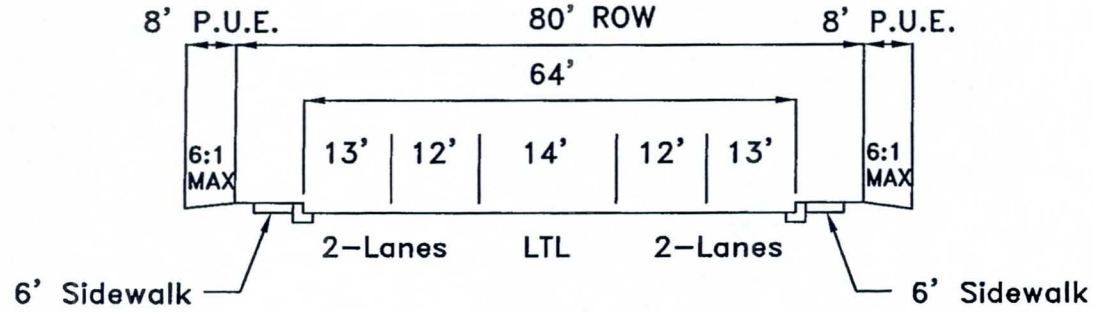

Note: Corner radii will equal 30'

I:\GU...TAILS\CAD\PE-010-4

08/16/2007

CITY OF PEORIA
STANDARD DETAIL PE-010-5
MINOR COLLECTOR ROADWAYS

APPROVALS: _____ CITY ENGINEER _____ DATE 8/20/07 _____ FIRE CHIEF _____ DATE 8-16-07

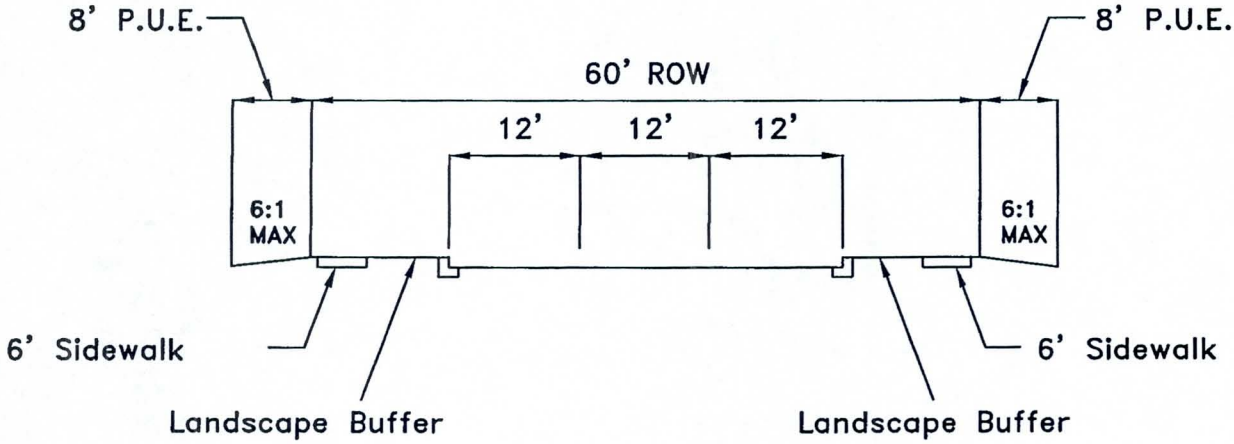

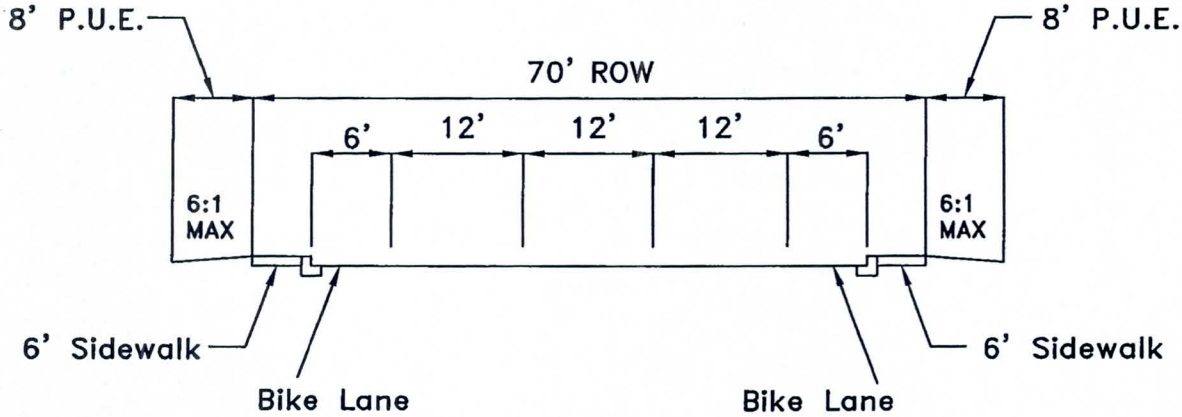

I:\GU TAILS\CAD\PE-010-5

08/16/2007

CITY OF PEORIA
STANDARD DETAIL PE-010-6
PRIVATE AND PUBLIC ROADWAY

APPROVALS: 8/20/07 — CITY ENGINEER — DATE; 8-16-07 — FIRE CHIEF — DATE

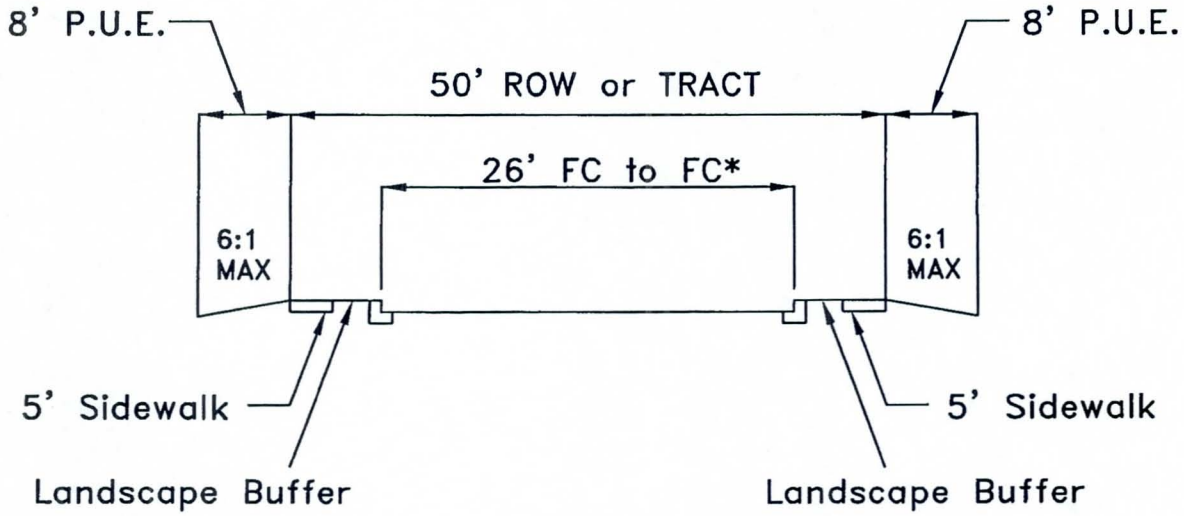

*parking on one side only
32' pavement provides parking on both sides

Note: Private Streets for Subdivisions with:
10 Lots or less, Sidewalk not required, Tract 40' + 8' P.U.E. on each side
10-20 Lots, Sidewalk required one side, Tract 45' + 8' P.U.E. on each side
More than 20 Lots,Sidewalk required both sides,Tract 50' + 8' P.U.E. on each side

GENERAL PLAN CIRCULATION ELEMENT
Policy B-3e:
The City shall discourage private streets unless the Peoria City Council determines that the streets meet the adopted standards and that the benefit to the City exceeds the liability.

I:\GUIDELINES\CAD\PE-010-6

08/16/2007

Appendix G Routing and Diversion Data

Maryvale ADMS Area Data

Glendale/Peoria ADMPU Area Data

Maryvale ADMS Area Routing and Diversion Data

- DDMSW Existing Routing Data
- DDMSW Future Routing Data
- Routing Parameters
- Multiple Street Diversion Description
- Diversion Parameters

Route ID	Shape	Length (ft)	Slope (ft/ft)	Manning's N	Diameter (in)	Height (ft)	Width (ft)	Side Slope (h/v)
KINEMATIC WAVE								
Major Basin MV								
RP27BH	PIPE	5,220.50	0.0034	0.015	57	-	-	-
RP27CB	PIPE	5,335.60	0.0034	0.015	57	-	-	-
RP27GC	PIPE	1,762.70	0.0034	0.015	60	-	-	-
RP27GL	PIPE	5,259.80	0.0034	0.015	54	-	-	-
RP27GR	PIPE	522.40	0.0034	0.015	60	-	-	-
RP27IN	PIPE	959.20	0.0034	0.015	72	-	-	-
RP27IS	PIPE	5,210.30	0.0034	0.015	57	-	-	-
RP27MD	PIPE	5,006.40	0.0034	0.015	66	-	-	-
RP27TM	PIPE	3,087.90	0.0034	0.015	60	-	-	-
RP31GC	PIPE	2,505.70	0.0040	0.015	72	-	-	-
RP31TM	PIPE	3,861.80	0.0037	0.015	72	-	-	-
RP35BH	PIPE	5,146.80	0.0037	0.015	69	-	-	-
RP35CB	PIPE	5,248.50	0.0037	0.015	69	-	-	-
RP35GC	PIPE	2,327.10	0.0035	0.015	36	-	-	-
RP35GL	PIPE	5,335.20	0.0037	0.015	53	-	-	-
RP35IN	PIPE	936.50	0.0037	0.015	93	-	-	-
RP35IS	PIPE	2,082.70	0.0037	0.015	73	-	-	-
RP35MD	PIPE	5,093.40	0.0037	0.015	77	-	-	-
RP35NO	PIPE	5,191.00	0.0037	0.015	42	-	-	-
RP35TM	PIPE	3,050.80	0.0035	0.015	36	-	-	-
RP35TM	PIPE	3,050.80	0.0037	0.015	72	-	-	-
RP39GR	PIPE	2,845.80	0.0040	0.015	72	-	-	-

Route ID	Shape	Length (ft)	Slope (ft/ft)	Manning's N	Diameter (in)	Height (ft)	Width (ft)	Side Slope (h/v)
RP39IS	PIPE	2,428.30	0.0035	0.015	72	-	-	-
RP43BH	PIPE	5,294.70	0.0035	0.015	85	-	-	-
RP43CB	PIPE	5,171.70	0.0035	0.015	85	-	-	-
RP43GC	PIPE	2,347.10	0.0035	0.015	73	-	-	-
RP43GL	PIPE	5,336.40	0.0035	0.015	71	-	-	-
RP43IN	PIPE	1,217.10	0.0035	0.015	102	-	-	-
RP43IS	PIPE	5,374.00	0.0035	0.015	60	-	-	-
RP43MD	PIPE	5,212.10	0.0035	0.015	102	-	-	-
RP43NO	PIPE	5,100.30	0.0035	0.015	48	-	-	-
RP43TM	PIPE	2,923.50	0.0035	0.015	87	-	-	-
RP51BH	PIPE	2,773.20	0.0118	0.015	85	-	-	-
RP51IN	PIPE	730.80	0.0033	0.015	84	-	-	-
RP51MD	PIPE	5,322.00	0.0033	0.015	72	-	-	-
RP51ML	PIPE	2,089.30	0.0033	0.015	72	-	-	-
RP51TM	PIPE	2,802.60	0.0033	0.015	72	-	-	-
RP59BR	PIPE	1,230.70	0.0020	0.015	78	-	-	-
RP59GC	PIPE	1,242.60	0.0037	0.015	81	-	-	-
RP59IN	PIPE	846.00	0.0037	0.015	90	-	-	-
RP59MD	PIPE	5,205.60	0.0037	0.015	84	-	-	-
RP59OL	PIPE	1,446.20	0.0031	0.015	42	-	-	-
RP59PE	PIPE	5,357.80	0.0020	0.015	30	-	-	-
RP59TM	PIPE	4,111.10	0.0037	0.015	72	-	-	-
RP63OL	PIPE	3,877.90	0.0040	0.015	30	-	-	-
RP67IN	PIPE	824.40	0.0027	0.015	90	-	-	-
RP67MD	PIPE	5,217.70	0.0027	0.015	78	-	-	-

Route ID	Shape	Length (ft)	Slope (ft/ft)	Manning's N	Diameter (in)	Height (ft)	Width (ft)	Side Slope (h/v)
RP67MV	PIPE	2,678.50	0.0039	0.015	60	-	-	-
RP67OL	PIPE	2,627.30	0.0027	0.015	66	-	-	-
RP67TM	PIPE	5,268.00	0.0027	0.015	66	-	-	-
RP67TM	PIPE	5,268.00	0.0027	0.015	66	-	-	-
RP75IN	PIPE	811.40	0.0022	0.015	90	-	-	-
RP75MD	PIPE	5,222.00	0.0022	0.015	84	-	-	-
RP75OL	PIPE	5,035.10	0.0047	0.015	60	-	-	-
RP75TM	PIPE	5,255.70	0.0022	0.015	60	-	-	-
RP83GL	PIPE	2,643.70	0.0036	0.015	72	-	-	-
RP83IN	PIPE	823.60	0.0019	0.015	90	-	-	-
RP83IS	PIPE	5,208.30	0.0019	0.015	24	-	-	-
RP83MD	PIPE	5,058.50	0.0019	0.015	84	-	-	-
RP83TM	PIPE	5,329.50	0.0019	0.015	72	-	-	-
RP91IN	PIPE	728.60	0.0020	0.015	90	-	-	-
RP91MD	PIPE	5,270.50	0.0020	0.015	84	-	-	-
RP91TM	PIPE	5,130.40	0.0020	0.015	72	-	-	-
RPBR63	PIPE	528.10	0.0038	0.015	60	-	-	-
RPCT75	PIPE	5,320.90	0.0026	0.015	78	-	-	-
RPCT83	PIPE	5,246.10	0.0027	0.015	108	-	-	-
RPCTLO	PIPE	6,333.90	0.0016	0.015	120	-	-	-
RPGC51	PIPE	1,038.10	0.0009	0.015	36	-	-	-
RPGL91	PIPE	5,306.20	0.0034	0.015	84	-	-	-
RPGLLO	PIPE	4,160.40	0.0034	0.015	90	-	-	-
RPGR67	PIPE	4,247.40	0.0018	0.015	108	-	-	-
RPML53	PIPE	1,084.20	0.0010	0.015	72	-	-	-

Route ID	Shape	Length (ft)	Slope (ft/ft)	Manning's N	Diameter (in)	Height (ft)	Width (ft)	Side Slope (h/v)
RPNO59	PIPE	5,145.60	0.0025	0.015	66	-	-	-
RPNO67	PIPE	2,688.40	0.0010	0.015	72	-	-	-
RPNO83	PIPE	5,291.40	0.0038	0.015	60	-	-	-
RPNO91	PIPE	6,940.50	0.0030	0.015	72	-	-	-
RPNOLO	PIPE	2,826.70	0.0007	0.015	60	-	-	-
RPOL59	PIPE	5,116.90	0.0032	0.015	78	-	-	-
RPOL63	PIPE	2,834.90	0.0038	0.015	90	-	-	-
RPOL67	PIPE	2,409.10	0.0033	0.015	90	-	-	-
RPOL71	PIPE	2,746.40	0.0243	0.015	72	-	-	-
RPOL75	PIPE	2,970.80	0.0054	0.015	78	-	-	-
RPOL83	PIPE	4,973.60	0.0010	0.015	90	-	-	-
RPOL91	PIPE	5,183.60	0.0010	0.015	90	-	-	-
RPOW67	PIPE	2,516.60	0.0019	0.015	108	-	-	-
RPOW71	PIPE	2,145.30	0.0029	0.015	66	-	-	-
RPOW75	PIPE	3,390.60	0.0019	0.015	42	-	-	-
RPOW83	PIPE	5,177.70	0.0021	0.015	48	-	-	-
RPPE91	PIPE	5,349.90	0.0061	0.015	48	-	-	-
RPPELO	PIPE	1,593.70	0.0012	0.015	72	-	-	-
RPTB83	PIPE	5,194.30	0.0023	0.015	66	-	-	-
RPTBLO	PIPE	1,531.70	0.0034	0.015	72	-	-	-

Route ID	LOB N	Chan N	ROB N	Length (ft)	Slope (ft/ft)	Max Elev (ft)		1.	2.	3.	4.	5.	6.	7.	8.
NORMAL DEPTH															
Major Basin MV															
RMD07	0.035	0.015	0.035	6,743.00	0.0013	-	X:	-	-	12.50	12.50	62.50	62.50	75.00	75.00
							Y:	3.00	0.62	0.50	-	-	0.50	0.62	3.00
RSBH2	0.035	0.015	0.035	5,280.00	0.0039	-	X:	-	-	26.00	26.00	148.00	148.00	174.00	174.00
7							Y:	3.00	0.76	0.50	-	-	0.50	0.76	3.00
RSBH3	0.035	0.015	0.035	5,280.00	0.0049	-	X:	-	-	67.00	67.00	332.00	332.00	399.00	399.00
5							Y:	3.00	1.17	0.50	-	-	0.50	1.17	3.00
RSBH4	0.035	0.015	0.035	5,280.00	0.0028	-	X:	-	-	57.50	57.50	291.50	291.50	349.00	349.00
3							Y:	3.00	1.08	0.50	-	-	0.50	1.08	3.00
RSBH5	0.035	0.015	0.035	5,280.00	0.0030	-	X:	-	-	61.50	61.50	316.50	316.50	378.00	378.00
1							Y:	3.00	1.12	0.50	-	-	0.50	1.12	3.00
RSBH5	0.035	0.015	0.035	5,280.00	0.0024	-	X:	-	-	30.50	30.50	167.50	167.50	198.00	198.00
9							Y:	3.00	0.80	0.50	-	-	0.50	0.80	3.00
RSBH6	0.035	0.015	0.035	5,280.00	0.0015	-	X:	-	-	75.50	75.50	402.50	402.50	478.00	478.00
7							Y:	3.00	1.25	0.50	-	-	0.50	1.25	3.00
RSBH7	0.035	0.015	0.035	5,280.00	0.0019	-	X:	-	-	68.50	68.50	359.50	359.50	428.00	428.00
5							Y:	3.00	1.18	0.50	-	-	0.50	1.18	3.00
RSBH8	0.035	0.015	0.035	5,280.00	0.0021	-	X:	-	-	72.50	72.50	425.50	425.50	498.00	498.00
3							Y:	3.00	1.23	0.50	-	-	0.50	1.23	3.00
RSBH9	0.035	0.015	0.035	5,280.00	0.0019	-	X:	-	-	37.50	37.50	210.50	210.50	248.00	248.00
1							Y:	3.00	0.88	0.50	-	-	0.50	0.88	3.00
RSBHL	0.035	0.015	0.035	5,164.80	0.0005	-	X:	-	4.00	16.00	34.00	57.00	74.00	86.00	89.00
O							Y:	10.24	9.24	9.00	-	0.20	8.70	8.97	9.94
RSBHRI	0.035	0.015	0.035	5,280.00	0.0015	-	X:	-	-	7.00	7.00	43.00	43.00	50.00	50.00
							Y:	3.00	0.57	0.50	-	-	0.50	0.57	3.00
RSCB2	0.035	0.015	0.035	5,280.00	0.0037	-	X:	-	-	26.00	26.00	148.00	148.00	174.00	174.00
7							Y:	3.00	0.76	0.50	-	-	0.50	0.76	3.00
RSCB3	0.035	0.015	0.035	5,280.00	0.0040	-	X:	-	-	95.50	95.50	453.50	453.50	549.00	549.00
5							Y:	3.00	1.46	0.50	-	-	0.50	1.46	3.00
RSCB4	0.035	0.015	0.035	5,280.00	0.0032	-	X:	-	-	57.50	57.50	291.50	291.50	349.00	349.00
3							Y:	3.00	1.08	0.50	-	-	0.50	1.08	3.00
RSCB5	0.035	0.015	0.035	5,280.00	0.0030	-	X:	-	-	48.00	48.00	251.00	251.00	299.00	299.00
9							Y:	3.00	0.98	0.50	-	-	0.50	0.98	3.00

Route ID	LOB N	Chan N	ROB N	Length (ft)	Slope (ft/ft)	Max Elev (ft)		1.	2.	3.	4.	5.	6.	7.	8.
RSCB6	0.035	0.015	0.035	5,280.00	0.0027	-	X:	-	-	57.50	57.50	291.50	291.50	349.00	349.00
7							Y:	3.00	1.08	0.50	-	-	0.50	1.08	3.00
RSCB7	0.035	0.015	0.035	5,280.00	0.0013	-	X:	-	-	86.00	86.00	413.00	413.00	499.00	499.00
5							Y:	3.00	1.36	0.50	-	-	0.50	1.36	3.00
RSCT67	0.035	0.015	0.035	5,280.00	0.0035	-	X:	-	-	24.50	24.50	155.50	155.50	180.00	180.00
							Y:	3.00	0.74	0.50	-	-	0.50	0.74	3.00
RSCT75	0.035	0.015	0.035	5,280.00	0.0038	-	X:	-	-	57.50	57.50	291.50	291.50	349.00	349.00
							Y:	3.00	1.08	0.50	-	-	0.50	1.08	3.00
RSCT83	0.035	0.015	0.035	5,280.00	0.0030	-	X:	-	-	48.00	48.00	251.00	251.00	299.00	299.00
							Y:	3.00	0.98	0.50	-	-	0.50	0.98	3.00
RSCTL	0.035	0.015	0.035	4,816.20	0.0016	-	X:	-	3.00	13.00	29.00	39.00	55.00	65.00	68.00
O							Y:	9.00	8.00	8.00	-	-	8.00	8.00	9.00
RSGC2	0.035	0.015	0.035	1,755.00	0.0028	-	X:	-	-	16.50	16.50	107.50	107.50	124.00	124.00
7							Y:	3.00	0.66	0.50	-	-	0.50	0.66	3.00
RSGC3	0.035	0.015	0.035	1,973.00	0.0033	-	X:	-	-	16.50	16.50	107.50	107.50	124.00	124.00
5							Y:	3.00	0.66	0.50	-	-	0.50	0.66	3.00
RSGC4	0.035	0.015	0.035	2,155.00	0.0038	-	X:	-	-	57.50	57.50	291.50	291.50	349.00	349.00
3							Y:	3.00	1.08	0.50	-	-	0.50	1.08	3.00
RSGC5	0.035	0.015	0.035	2,155.00	0.0045	-	X:	-	-	67.00	67.00	332.00	332.00	399.00	399.00
1							Y:	3.00	1.17	0.50	-	-	0.50	1.17	3.00
RSGC5	0.035	0.015	0.035	2,502.00	0.0025	-	X:	-	-	57.50	57.50	291.50	291.50	349.00	349.00
9							Y:	3.00	1.08	0.50	-	-	0.50	1.08	3.00
RSGC6	0.035	0.015	0.035	5,280.00	0.0017	-	X:	-	-	76.50	76.50	372.50	372.50	449.00	449.00
7							Y:	3.00	1.27	0.50	-	-	0.50	1.27	3.00
RSGCG	0.035	0.015	0.035	3,104.00	0.0029	-	X:	-	-	48.00	48.00	251.00	251.00	299.00	299.00
R							Y:	3.00	0.98	0.50	-	-	0.50	0.98	3.00
RSGL27	0.035	0.015	0.035	5,280.00	0.0040	-	X:	-	-	26.00	26.00	148.00	148.00	174.00	174.00
							Y:	3.00	0.76	0.50	-	-	0.50	0.76	3.00
RSGL35	0.035	0.015	0.035	5,280.00	0.0032	-	X:	-	-	76.50	76.50	372.50	372.50	449.00	449.00
							Y:	3.00	1.27	0.50	-	-	0.50	1.27	3.00
RSGL43	0.035	0.015	0.035	5,280.00	0.0034	-	X:	-	-	57.50	57.50	291.50	291.50	349.00	349.00
							Y:	3.00	1.08	0.50	-	-	0.50	1.08	3.00
RSGL51	0.035	0.015	0.035	5,280.00	0.0027	-	X:	-	-	61.50	61.50	316.50	316.50	378.00	378.00
							Y:	3.00	1.12	0.50	-	-	0.50	1.12	3.00

Route ID	LOB N	Chan N	ROB N	Length (ft)	Slope (ft/ft)	Max Elev (ft)		1.	2.	3.	4.	5.	6.	7.	8.
RSGL59	0.035	0.015	0.035	5,280.00	0.0018	-	X:	-	-	37.50	37.50	210.50	210.50	248.00	248.00
							Y:	3.00	0.88	0.50	-	-	0.50	0.88	3.00
RSGL67	0.035	0.015	0.035	2,640.00	0.0052	-	X:	-	-	27.50	27.50	132.50	132.50	160.00	160.00
							Y:	3.00	0.78	0.50	-	-	0.50	0.78	3.00
RSGL75	0.035	0.015	0.035	2,640.00	0.0035	-	X:	-	-	54.50	54.50	283.50	283.50	338.00	338.00
							Y:	3.00	1.04	0.50	-	-	0.50	1.04	3.00
RSGL83	0.035	0.015	0.035	2,640.00	0.0041	-	X:	-	-	38.50	38.50	241.50	241.50	280.00	280.00
							Y:	3.00	0.88	0.50	-	-	0.50	0.88	3.00
RSGL91	0.035	0.015	0.035	5,280.00	0.0032	-	X:	-	-	38.50	38.50	241.50	241.50	280.00	280.00
							Y:	3.00	0.88	0.50	-	-	0.50	0.88	3.00
RSGLL O	0.035	0.015	0.035	2,381.20	0.0023	-	X:	-	4.00	16.00	26.00	34.00	44.00	56.00	59.00
							Y:	6.24	5.24	5.00	-	0.20	5.20	5.44	6.44
RSGR2 7	0.035	0.015	0.035	4,632.00	0.0019	-	X:	-	-	33.00	33.00	215.00	215.00	248.00	248.00
							Y:	3.00	0.83	0.50	-	-	0.50	0.83	3.00
RSGR3 5	0.035	0.015	0.035	7,095.00	0.0033	-	X:	-	-	48.00	48.00	251.00	251.00	299.00	299.00
							Y:	3.00	0.98	0.50	-	-	0.50	0.98	3.00
RSGR4 3	0.035	0.015	0.035	7,370.00	0.0013	-	X:	-	-	31.50	31.50	143.50	143.50	175.00	175.00
							Y:	3.00	0.82	0.50	-	-	0.50	0.82	3.00
RSGR8 3	0.035	0.015	0.035	7,145.00	0.0003	-	X:	-	-	67.00	67.00	332.00	332.00	399.00	399.00
							Y:	3.00	1.17	0.50	-	-	0.50	1.17	3.00
RSGR9 1	0.035	0.015	0.035	4,969.00	0.0024	-	X:	-	-	57.50	57.50	291.50	291.50	349.00	349.00
							Y:	3.00	1.08	0.50	-	-	0.50	1.08	3.00
RSIN07	0.035	0.015	0.035	844.00	0.0008	-	X:	-	-	16.50	16.50	107.50	107.50	124.00	124.00
							Y:	3.00	0.66	0.50	-	-	0.50	0.66	3.00
RSIN35	0.035	0.015	0.035	1,116.00	0.0019	-	X:	-	-	76.50	76.50	372.50	372.50	449.00	449.00
							Y:	3.00	1.27	0.50	-	-	0.50	1.27	3.00
RSIN43	0.035	0.015	0.035	900.00	0.0042	-	X:	-	-	57.50	57.50	291.50	291.50	349.00	349.00
							Y:	3.00	1.08	0.50	-	-	0.50	1.08	3.00
RSIN51	0.035	0.015	0.035	1,143.00	0.0007	-	X:	-	-	54.50	54.50	269.50	269.50	324.00	324.00
							Y:	3.00	1.04	0.50	-	-	0.50	1.04	3.00
RSIN59	0.035	0.015	0.035	730.00	0.0047	-	X:	-	-	35.50	35.50	188.50	188.50	224.00	224.00
							Y:	3.00	0.86	0.50	-	-	0.50	0.86	3.00
RSIN67	0.035	0.015	0.035	741.00	0.0027	-	X:	-	-	12.50	12.50	62.50	62.50	75.00	75.00
							Y:	3.00	0.62	0.50	-	-	0.50	0.62	3.00

Route ID	LOB N	Chan N	ROB N	Length (ft)	Slope (ft/ft)	Max Elev (ft)		1.	2.	3.	4.	5.	6.	7.	8.
RSIN75	0.035	0.015	0.035	731.00	0.0022	-	X:	-	-	29.00	29.00	170.00	170.00	199.00	199.00
							Y:	3.00	0.79	0.50	-	-	0.50	0.79	3.00
RSIN91	0.035	0.015	0.035	535.00	0.0019	-	X:	-	-	9.50	9.50	40.50	40.50	50.00	50.00
							Y:	3.00	0.60	0.50	-	-	0.50	0.60	3.00
RSIN99	0.035	0.015	0.035	6,080.00	0.0019	-	X:	-	-	16.50	16.50	107.50	107.50	124.00	124.00
							Y:	3.00	0.66	0.50	-	-	0.50	0.66	3.00
RSINAF	0.035	0.015	0.035	1,317.00	0.0022	-	X:	-	-	22.00	22.00	103.00	103.00	125.00	125.00
							Y:	3.00	0.72	0.50	-	-	0.50	0.72	3.00
RSINAV	0.035	0.015	0.035	1,317.00	0.0022	-	X:	-	-	16.50	16.50	107.50	107.50	124.00	124.00
							Y:	3.00	0.66	0.50	-	-	0.50	0.66	3.00
RSINLO	0.035	0.015	0.035	1,374.40	0.0019	-	X:	-	3.00	5.00	39.00	47.00	51.00	65.00	68.00
							Y:	18.00	17.00	17.00	-	0.16	17.16	17.44	18.44
RSIS07	0.035	0.015	0.035	5,280.00	0.0026	-	X:	-	-	26.00	26.00	148.00	148.00	174.00	174.00
							Y:	3.00	0.76	0.50	-	-	0.50	0.76	3.00
RSIS27	0.035	0.015	0.035	5,280.00	0.0038	-	X:	-	-	26.00	26.00	148.00	148.00	174.00	174.00
							Y:	3.00	0.76	0.50	-	-	0.50	0.76	3.00
RSIS35	0.035	0.015	0.035	5,280.00	0.0038	-	X:	-	-	86.00	86.00	413.00	413.00	499.00	499.00
							Y:	3.00	1.36	0.50	-	-	0.50	1.36	3.00
RSIS43	0.035	0.015	0.035	5,280.00	0.0048	-	X:	-	-	16.50	16.50	107.50	107.50	124.00	124.00
							Y:	3.00	0.66	0.50	-	-	0.50	0.66	3.00
RSIS51	0.035	0.015	0.035	5,280.00	0.0037	-	X:	-	-	38.50	38.50	210.50	210.50	249.00	249.00
							Y:	3.00	0.88	0.50	-	-	0.50	0.88	3.00
RSIS59	0.035	0.015	0.035	5,280.00	0.0030	-	X:	-	-	67.00	67.00	332.00	332.00	399.00	399.00
							Y:	3.00	1.17	0.50	-	-	0.50	1.17	3.00
RSIS83	0.035	0.015	0.035	5,280.00	0.0022	-	X:	-	-	57.50	57.50	291.50	291.50	349.00	349.00
							Y:	3.00	1.08	0.50	-	-	0.50	1.08	3.00
RSIS91	0.035	0.015	0.035	5,280.00	0.0017	-	X:	-	-	57.50	57.50	291.50	291.50	349.00	349.00
							Y:	3.00	1.08	0.50	-	-	0.50	1.08	3.00
RSIS99	0.035	0.015	0.035	5,280.00	0.0020	-	X:	-	-	16.50	16.50	107.50	107.50	124.00	124.00
							Y:	3.00	0.66	0.50	-	-	0.50	0.66	3.00
RSISGC	0.035	0.015	0.035	1,231.00	0.0022	-	X:	-	-	31.50	31.50	143.50	143.50	175.00	175.00
							Y:	3.00	0.82	0.50	-	-	0.50	0.82	3.00
RSISLO	0.035	0.015	0.035	5,582.50	0.0010	-	X:	-	4.00	14.00	29.00	49.00	64.00	94.00	97.00
							Y:	11.20	10.20	10.00	-	0.40	10.40	11.84	12.84

Route ID	LOB N	Chan N	ROB N	Length (ft)	Slope (ft/ft)	Max Elev (ft)		1.	2.	3.	4.	5.	6.	7.	8.
RSMD07	0.035	0.015	0.035	5,280.00	0.0006	-	X:	-	-	26.00	26.00	148.00	148.00	174.00	174.00
							Y:	3.00	0.76	0.50	-	-	0.50	0.76	3.00
RSMD27	0.035	0.015	0.035	5,280.00	0.0034	-	X:	-	-	16.50	16.50	107.50	107.50	124.00	124.00
							Y:	3.00	0.66	0.50	-	-	0.50	0.66	3.00
RSMD35	0.035	0.015	0.035	5,280.00	0.0036	-	X:	-	-	67.00	67.00	332.00	332.00	399.00	399.00
							Y:	3.00	1.17	0.50	-	-	0.50	1.17	3.00
RSMD43	0.035	0.015	0.035	5,280.00	0.0037	-	X:	-	-	67.00	67.00	332.00	332.00	399.00	399.00
							Y:	3.00	1.17	0.50	-	-	0.50	1.17	3.00
RSMD51	0.035	0.015	0.035	5,280.00	0.0035	-	X:	-	-	54.50	54.50	269.50	269.50	324.00	324.00
							Y:	3.00	1.04	0.50	-	-	0.50	1.04	3.00
RSMD59	0.035	0.015	0.035	5,280.00	0.0035	-	X:	-	-	38.50	38.50	210.50	210.50	249.00	249.00
							Y:	3.00	0.88	0.50	-	-	0.50	0.88	3.00
RSMD67	0.035	0.015	0.035	5,280.00	0.0035	-	X:	-	-	48.00	48.00	251.00	251.00	299.00	299.00
							Y:	3.00	0.98	0.50	-	-	0.50	0.98	3.00
RSMD75	0.035	0.015	0.035	5,280.00	0.0027	-	X:	-	-	67.00	67.00	332.00	332.00	399.00	399.00
							Y:	3.00	1.17	0.50	-	-	0.50	1.17	3.00
RSMD83	0.035	0.015	0.035	5,280.00	0.0028	-	X:	-	-	29.00	29.00	170.00	170.00	199.00	199.00
							Y:	3.00	0.79	0.50	-	-	0.50	0.79	3.00
RSMD91	0.035	0.015	0.035	5,280.00	0.0021	-	X:	-	-	57.50	57.50	291.50	291.50	349.00	349.00
							Y:	3.00	1.08	0.50	-	-	0.50	1.08	3.00
RSMD99	0.035	0.015	0.035	5,508.00	0.0010	-	X:	-	-	16.50	16.50	107.50	107.50	124.00	124.00
							Y:	3.00	0.66	0.50	-	-	0.50	0.66	3.00
RSMDAV	0.035	0.015	0.035	5,280.00	0.0017	-	X:	-	-	38.50	38.50	210.50	210.50	249.00	249.00
							Y:	3.00	0.88	0.50	-	-	0.50	0.88	3.00
RSMDLO	0.035	0.015	0.035	5,728.50	0.0012	-	X:	-	3.00	5.00	39.00	47.00	51.00	65.00	68.00
							Y:	18.00	17.00	17.00	-	0.16	17.16	17.44	18.44
RSNO35	0.035	0.015	0.035	5,280.00	0.0036	-	X:	-	-	67.00	67.00	332.00	332.00	399.00	399.00
							Y:	3.00	1.17	0.50	-	-	0.50	1.17	3.00
RSNO43	0.035	0.015	0.035	5,280.00	0.0035	-	X:	-	-	67.00	67.00	332.00	332.00	399.00	399.00
							Y:	3.00	1.17	0.50	-	-	0.50	1.17	3.00
RSNO51	0.035	0.015	0.035	5,280.00	0.0019	-	X:	-	-	54.50	54.50	273.50	273.50	328.00	328.00
							Y:	3.00	1.04	0.50	-	-	0.50	1.04	3.00
RSNO59	0.035	0.015	0.035	5,280.00	0.0024	-	X:	-	-	86.50	86.50	511.50	511.50	598.00	598.00
							Y:	3.00	1.36	0.50	-	-	0.50	1.36	3.00

Route ID	LOB N	Chan N	ROB N	Length (ft)	Slope (ft/ft)	Max Elev (ft)		1.	2.	3.	4.	5.	6.	7.	8.
RSNO67	0.035	0.015	0.035	5,280.00	0.0019	-	X:	-	-	58.50	58.50	339.50	339.50	398.00	398.00
							Y:	3.00	1.08	0.50	-	-	0.50	1.08	3.00
RSNO75	0.035	0.015	0.035	5,280.00	0.0019	-	X:	-	-	29.00	29.00	170.00	170.00	199.00	199.00
							Y:	3.00	0.79	0.50	-	-	0.50	0.79	3.00
RSNO83	0.035	0.015	0.035	5,280.00	0.0040	-	X:	-	-	35.50	35.50	188.50	188.50	224.00	224.00
							Y:	3.00	0.86	0.50	-	-	0.50	0.86	3.00
RSNO91	0.035	0.015	0.035	5,280.00	0.0029	-	X:	-	-	48.00	48.00	251.00	251.00	299.00	299.00
							Y:	3.00	0.98	0.50	-	-	0.50	0.98	3.00
RSNOLO	0.035	0.015	0.035	6,135.80	0.0023	-	X:	-	4.00	16.00	26.00	34.00	44.00	56.00	59.00
							Y:	6.24	5.24	5.00	-	0.20	5.20	5.44	6.44
RSOL51	0.035	0.015	0.035	5,280.00	0.0031	-	X:	-	-	68.50	68.50	359.50	359.50	428.00	428.00
							Y:	3.00	1.18	0.50	-	-	0.50	1.18	3.00
RSOL59	0.035	0.015	0.035	5,280.00	0.0023	-	X:	-	-	72.50	72.50	425.50	425.50	498.00	498.00
							Y:	3.00	1.23	0.50	-	-	0.50	1.23	3.00
RSOL67	0.035	0.015	0.035	5,280.00	0.0031	-	X:	-	-	45.50	45.50	284.50	284.50	330.00	330.00
							Y:	3.00	0.96	0.50	-	-	0.50	0.96	3.00
RSOL75	0.035	0.015	0.035	5,280.00	0.0027	-	X:	-	-	57.50	57.50	291.50	291.50	349.00	349.00
							Y:	3.00	1.08	0.50	-	-	0.50	1.08	3.00
RSOL83	0.035	0.015	0.035	5,280.00	0.0031	-	X:	-	-	67.00	67.00	332.00	332.00	399.00	399.00
							Y:	3.00	1.17	0.50	-	-	0.50	1.17	3.00
RSOL91	0.035	0.015	0.035	5,280.00	0.0019	-	X:	-	-	86.00	86.00	413.00	413.00	499.00	499.00
							Y:	3.00	1.36	0.50	-	-	0.50	1.36	3.00
RSOLLO	0.035	0.015	0.035	5,324.40	0.0018	-	X:	-	3.00	13.00	33.00	63.00	83.00	93.00	96.00
							Y:	11.00	10.00	10.00	-	-	10.00	10.00	11.00
RSOW67	0.035	0.015	0.035	2,640.00	0.0035	-	X:	-	-	17.50	17.50	112.50	112.50	130.00	130.00
							Y:	3.00	0.68	0.50	-	-	0.50	0.68	3.00
RSOW75	0.035	0.015	0.035	2,640.00	0.0025	-	X:	-	-	47.50	47.50	240.50	240.50	288.00	288.00
							Y:	3.00	0.98	0.50	-	-	0.50	0.98	3.00
RSPE59	0.035	0.015	0.035	5,280.00	0.0037	-	X:	-	-	58.50	58.50	339.50	339.50	398.00	398.00
							Y:	3.00	1.08	0.50	-	-	0.50	1.08	3.00
RSPE67	0.035	0.015	0.035	5,280.00	0.0022	-	X:	-	-	58.50	58.50	339.50	339.50	398.00	398.00
							Y:	3.00	1.08	0.50	-	-	0.50	1.08	3.00
RSPE75	0.035	0.015	0.035	5,280.00	0.0027	-	X:	-	-	57.50	57.50	291.50	291.50	349.00	349.00
							Y:	3.00	1.08	0.50	-	-	0.50	1.08	3.00

Route ID	LOB N	Chan N	ROB N	Length (ft)	Slope (ft/ft)	Max Elev (ft)		1.	2.	3.	4.	5.	6.	7.	8.
RSPE83	0.035	0.015	0.035	5,280.00	0.0023	-	X:	-	-	76.50	76.50	372.50	372.50	449.00	449.00
							Y:	3.00	1.27	0.50	-	-	0.50	1.27	3.00
RSPEL	0.035	0.015	0.035	2,703.70	0.0018	-	X:	-	3.00	13.00	25.00	35.00	47.00	57.00	60.00
O							Y:	7.00	6.00	6.00	-	-	6.00	6.00	7.00
RSRI07	0.035	0.015	0.035	2,640.00	0.0008	-	X:	-	-	26.00	26.00	148.00	148.00	174.00	174.00
							Y:	3.00	0.76	0.50	-	-	0.50	0.76	3.00
RSTB83	0.035	0.015	0.035	5,280.00	0.0023	-	X:	-	-	48.00	48.00	251.00	251.00	299.00	299.00
							Y:	3.00	0.98	0.50	-	-	0.50	0.98	3.00
RSTM0	0.035	0.015	0.035	2,640.00	0.0019	-	X:	-	-	16.50	16.50	107.50	107.50	124.00	124.00
7							Y:	3.00	0.66	0.50	-	-	0.50	0.66	3.00
RSTM3	0.035	0.015	0.035	3,050.00	0.0051	-	X:	-	-	16.50	16.50	107.50	107.50	124.00	124.00
5							Y:	3.00	0.66	0.50	-	-	0.50	0.66	3.00
RSTM4	0.035	0.015	0.035	3,050.00	0.0045	-	X:	-	-	16.50	16.50	107.50	107.50	124.00	124.00
3							Y:	3.00	0.66	0.50	-	-	0.50	0.66	3.00
RSTM5	0.035	0.015	0.035	2,916.00	0.0044	-	X:	-	-	29.00	29.00	170.00	170.00	199.00	199.00
1							Y:	3.00	0.79	0.50	-	-	0.50	0.79	3.00
RSTM5	0.035	0.015	0.035	2,752.00	0.0054	-	X:	-	-	29.00	29.00	170.00	170.00	199.00	199.00
9							Y:	3.00	0.79	0.50	-	-	0.50	0.79	3.00
RSTM6	0.035	0.015	0.035	5,280.00	0.0029	-	X:	-	-	9.50	9.50	40.50	40.50	50.00	50.00
7							Y:	3.00	0.60	0.50	-	-	0.50	0.60	3.00
RSTM7	0.035	0.015	0.035	5,280.00	0.0027	-	X:	-	-	38.50	38.50	210.50	210.50	249.00	249.00
5							Y:	3.00	0.88	0.50	-	-	0.50	0.88	3.00
RSTM8	0.035	0.015	0.035	5,280.00	0.0023	-	X:	-	-	76.50	76.50	372.50	372.50	449.00	449.00
3							Y:	3.00	1.27	0.50	-	-	0.50	1.27	3.00
RSTM9	0.035	0.015	0.035	5,280.00	0.0021	-	X:	-	-	67.00	67.00	332.00	332.00	399.00	399.00
1							Y:	3.00	1.17	0.50	-	-	0.50	1.17	3.00
RSTM9	0.035	0.015	0.035	5,280.00	0.0009	-	X:	-	-	16.50	16.50	107.50	107.50	124.00	124.00
9							Y:	3.00	0.66	0.50	-	-	0.50	0.66	3.00
RSTML	0.035	0.015	0.035	5,309.40	0.0010	-	X:	-	4.00	14.00	29.00	44.00	59.00	73.00	76.00
O							Y:	11.20	10.20	10.00	-	0.30	10.30	10.58	11.58
RWBH3	0.035	0.015	0.035	5,280.00	0.0002	-	X:	-	-	86.00	86.00	413.00	413.00	499.00	499.00
5							Y:	3.00	1.36	0.50	-	-	0.50	1.36	3.00
RWBH4	0.035	0.015	0.035	5,280.00	0.0001	-	X:	-	-	133.50	133.50	615.50	615.50	749.00	749.00
3							Y:	3.00	1.84	0.50	-	-	0.50	1.84	3.00

Route ID	LOB N	Chan N	ROB N	Length (ft)	Slope (ft/ft)	Max Elev (ft)		1.	2.	3.	4.	5.	6.	7.	8.
RWBH5	0.035	0.015	0.035	5,280.00	0.0016	-	X:	-	-	75.50	75.50	402.50	402.50	478.00	478.00
1							Y:	3.00	1.25	0.50	-	-	0.50	1.25	3.00
RWBH5	0.035	0.015	0.035	5,280.00	0.0025	-	X:	-	-	47.50	47.50	230.50	230.50	278.00	278.00
9							Y:	3.00	0.98	0.50	-	-	0.50	0.98	3.00
RWBH6	0.035	0.015	0.035	5,280.00	0.0028	-	X:	-	-	68.50	68.50	359.50	359.50	428.00	428.00
7							Y:	3.00	1.18	0.50	-	-	0.50	1.18	3.00
RWBH7	0.035	0.015	0.035	5,280.00	0.0038	-	X:	-	-	61.50	61.50	316.50	316.50	378.00	378.00
5							Y:	3.00	1.12	0.50	-	-	0.50	1.12	3.00
RWBH8	0.035	0.015	0.035	5,280.00	0.0034	-	X:	-	-	47.50	47.50	230.50	230.50	278.00	278.00
3							Y:	3.00	0.98	0.50	-	-	0.50	0.98	3.00
RWBH9	0.035	0.015	0.035	6,508.20	0.0008	-	X:	-	4.00	18.00	66.00	126.00	162.00	172.00	176.00
1							Y:	13.14	12.14	12.00	-	0.60	9.15	9.25	10.25
RWBH9	0.035	0.015	0.035	1,074.60	0.0011	-	X:	-	4.00	18.00	46.50	135.50	153.40	167.40	171.40
9							Y:	8.26	7.26	7.12	-	0.85	5.32	5.46	6.46
RWBHL	0.035	0.015	0.035	4,110.00	0.0011	-	X:	-	4.00	18.00	46.50	135.50	153.40	167.40	171.40
O							Y:	8.26	7.26	7.12	-	0.85	5.32	5.46	6.46
RWBHN	0.035	0.015	0.035	3,230.70	0.0010	-	X:	-	4.00	18.00	46.50	135.50	153.40	167.40	171.40
R							Y:	8.26	7.26	7.12	-	0.85	5.32	5.46	6.46
RWBHR	0.035	0.015	0.035	2,391.50	0.0010	-	X:	-	4.00	18.00	46.50	135.50	153.40	167.40	171.40
I							Y:	8.26	7.26	7.12	-	0.85	5.32	5.46	6.46
RWCB3	0.035	0.015	0.035	5,280.00	0.0006	-	X:	-	-	105.00	105.00	494.00	494.00	599.00	599.00
5							Y:	3.00	1.55	0.50	-	-	0.50	1.55	3.00
RWCB4	0.035	0.015	0.035	5,280.00	0.0001	-	X:	-	-	86.00	86.00	413.00	413.00	499.00	499.00
3							Y:	3.00	1.36	0.50	-	-	0.50	1.36	3.00
RWCB5	0.035	0.015	0.035	5,280.00	0.0014	-	X:	-	-	16.50	16.50	107.50	107.50	124.00	124.00
1							Y:	3.00	0.66	0.50	-	-	0.50	0.66	3.00
RWCB5	0.035	0.015	0.035	5,280.00	0.0023	-	X:	-	-	48.00	48.00	251.00	251.00	299.00	299.00
9							Y:	3.00	0.98	0.50	-	-	0.50	0.98	3.00
RWCB6	0.035	0.015	0.035	5,280.00	0.0025	-	X:	-	-	67.00	67.00	332.00	332.00	399.00	399.00
7							Y:	3.00	1.17	0.50	-	-	0.50	1.17	3.00
RWCB7	0.035	0.015	0.035	5,280.00	0.0024	-	X:	-	-	86.00	86.00	413.00	413.00	499.00	499.00
5							Y:	3.00	1.36	0.50	-	-	0.50	1.36	3.00
RWCB9	0.035	0.015	0.035	5,280.00	0.0036	-	X:	-	-	57.50	57.50	291.50	291.50	349.00	349.00
1							Y:	3.00	1.08	0.50	-	-	0.50	1.08	3.00

Route ID	LOB N	Chan N	ROB N	Length (ft)	Slope (ft/ft)	Max Elev (ft)		1.	2.	3.	4.	5.	6.	7.	8.
RWCBL	0.035	0.015	0.035	4,287.00	0.0028	-	X:	-	-	48.00	48.00	251.00	251.00	299.00	299.00
O							Y:	3.00	0.98	0.50	-	-	0.50	0.98	3.00
RWCBN	0.035	0.015	0.035	3,883.00	0.0010	-	X:	-	-	16.50	16.50	107.50	107.50	124.00	124.00
R							Y:	3.00	0.66	0.50	-	-	0.50	0.66	3.00
RWCBR	0.035	0.015	0.035	3,883.00	0.0021	-	X:	-	-	16.50	16.50	107.50	107.50	124.00	124.00
I							Y:	3.00	0.66	0.50	-	-	0.50	0.66	3.00
RWCT6	0.035	0.015	0.035	5,280.00	0.0041	-	X:	-	-	33.50	33.50	144.50	144.50	178.00	178.00
7							Y:	3.00	0.84	0.50	-	-	0.50	0.84	3.00
RWCT7	0.035	0.015	0.035	5,280.00	0.0030	-	X:	-	-	76.50	76.50	372.50	372.50	449.00	449.00
5							Y:	3.00	1.27	0.50	-	-	0.50	1.27	3.00
RWCT8	0.035	0.015	0.035	5,280.00	0.0026	-	X:	-	-	57.50	57.50	291.50	291.50	349.00	349.00
3							Y:	3.00	1.08	0.50	-	-	0.50	1.08	3.00
RWCTL	0.035	0.015	0.035	6,650.00	0.0048	-	X:	-	-	76.50	76.50	372.50	372.50	449.00	449.00
O							Y:	3.00	1.27	0.50	-	-	0.50	1.27	3.00
RWGC4	0.035	0.015	0.035	6,627.00	0.0009	-	X:	-	-	9.50	9.50	40.50	40.50	50.00	50.00
3							Y:	3.00	0.60	0.50	-	-	0.50	0.60	3.00
RWGC5	0.035	0.015	0.035	5,614.00	0.0005	-	X:	-	-	19.00	19.00	81.00	81.00	100.00	100.00
1							Y:	3.00	0.69	0.50	-	-	0.50	0.69	3.00
RWGC5	0.035	0.015	0.035	1,296.00	0.0012	-	X:	-	-	9.50	9.50	40.50	40.50	50.00	50.00
3							Y:	3.00	0.60	0.50	-	-	0.50	0.60	3.00
RWGC6	0.035	0.015	0.035	3,841.00	0.0016	-	X:	-	-	48.00	48.00	251.00	251.00	299.00	299.00
7							Y:	3.00	0.98	0.50	-	-	0.50	0.98	3.00
RWGC8	0.035	0.015	0.035	6,563.00	0.0010	-	X:	-	3.00	13.00	13.00	31.00	31.00	41.00	44.00
3							Y:	10.00	9.00	9.00	-	-	9.00	9.00	10.00
RWGL5	0.035	0.015	0.035	5,280.00	0.0011	-	X:	-	-	61.50	61.50	316.50	316.50	378.00	378.00
1							Y:	3.00	1.12	0.50	-	-	0.50	1.12	3.00
RWGL5	0.035	0.015	0.035	5,280.00	0.0031	-	X:	-	-	68.50	68.50	359.50	359.50	428.00	428.00
9							Y:	3.00	1.18	0.50	-	-	0.50	1.18	3.00
RWGL6	0.035	0.015	0.035	5,280.00	0.0037	-	X:	-	-	41.50	41.50	218.50	218.50	260.00	260.00
7							Y:	3.00	0.92	0.50	-	-	0.50	0.92	3.00
RWGL7	0.035	0.015	0.035	5,280.00	0.0034	-	X:	-	-	47.00	47.00	283.00	283.00	330.00	330.00
5							Y:	3.00	0.97	0.50	-	-	0.50	0.97	3.00
RWGL8	0.035	0.015	0.035	5,280.00	0.0032	-	X:	-	-	47.00	47.00	283.00	283.00	330.00	330.00
3							Y:	3.00	0.97	0.50	-	-	0.50	0.97	3.00

Route ID	LOB N	Chan N	ROB N	Length (ft)	Slope (ft/ft)	Max Elev (ft)		1.	2.	3.	4.	5.	6.	7.	8.
RWGL9	0.035	0.015	0.035	5,280.00	0.0032	-	X:	-	-	33.00	33.00	197.00	197.00	230.00	230.00
1							Y:	3.00	0.83	0.50	-	-	0.50	0.83	3.00
RWGLL	0.035	0.015	0.035	4,441.00	0.0027	-	X:	-	-	19.00	19.00	111.00	111.00	130.00	130.00
O							Y:	3.00	0.69	0.50	-	-	0.50	0.69	3.00
RWGR6	0.035	0.015	0.035	7,222.00	0.0008	-	X:	-	-	75.50	75.50	402.50	402.50	478.00	478.00
7							Y:	3.00	1.25	0.50	-	-	0.50	1.25	3.00
RWGR7	0.035	0.015	0.035	7,409.00	0.0008	-	X:	-	-	44.50	44.50	253.50	253.50	298.00	298.00
5							Y:	3.00	0.94	0.50	-	-	0.50	0.94	3.00
RWIN07	0.035	0.015	0.035	6,474.80	0.0017	-	X:	-	0.10	18.00	36.00	66.00	84.00	102.00	102.10
							Y:	18.00	17.05	9.00	-	-	9.00	17.05	18.00
RWIN35	0.035	0.015	0.035	5,280.00	0.0005	-	X:	-	-	9.50	9.50	40.50	40.50	50.00	50.00
							Y:	3.00	0.60	0.50	-	-	0.50	0.60	3.00
RWIN43	0.035	0.015	0.035	5,280.00	0.0008	-	X:	-	-	9.50	9.50	40.50	40.50	50.00	50.00
							Y:	3.00	0.60	0.50	-	-	0.50	0.60	3.00
RWIN51	0.035	0.015	0.035	5,289.80	0.0027	-	X:	-	0.10	18.00	36.00	66.00	84.00	102.00	102.10
							Y:	18.00	17.05	9.00	-	-	9.00	17.05	18.00
RWIN59	0.035	0.015	0.035	5,296.70	0.0017	-	X:	-	0.10	18.00	36.00	66.00	84.00	102.00	102.10
							Y:	18.00	17.05	9.00	-	-	9.00	17.05	18.00
RWIN67	0.035	0.015	0.035	5,145.20	0.0012	-	X:	-	0.10	18.00	36.00	66.00	84.00	102.00	102.10
							Y:	18.00	17.05	9.00	-	-	9.00	17.05	18.00
RWIN75	0.035	0.015	0.035	5,237.10	0.0020	-	X:	-	0.10	18.00	36.00	66.00	84.00	102.00	102.10
							Y:	18.00	17.05	9.00	-	-	9.00	17.05	18.00
RWIN83	0.035	0.015	0.035	5,396.30	0.0016	-	X:	-	0.10	18.00	36.00	66.00	84.00	102.00	102.10
							Y:	18.00	17.05	9.00	-	-	9.00	17.05	18.00
RWIN91	0.035	0.015	0.035	5,217.20	0.0016	-	X:	-	0.10	18.00	36.00	66.00	84.00	102.00	102.10
							Y:	18.00	17.05	9.00	-	-	9.00	17.05	18.00
RWINA	0.035	0.015	0.035	7,360.20	0.0009	-	X:	-	0.10	18.00	36.00	66.00	84.00	102.00	102.10
F							Y:	18.00	17.05	9.00	-	-	9.00	17.05	18.00
RWINA	0.035	0.015	0.035	5,173.60	0.0019	-	X:	-	0.10	18.00	36.00	66.00	84.00	102.00	102.10
V							Y:	18.00	17.05	9.00	-	-	9.00	17.05	18.00
RWINL	0.035	0.015	0.035	4,152.70	0.0008	-	X:	-	0.10	18.00	36.00	66.00	84.00	102.00	102.10
O							Y:	18.00	17.05	9.00	-	-	9.00	17.05	18.00
RWIS07	0.035	0.015	0.035	5,280.00	0.0022	-	X:	-	-	35.50	35.50	188.50	188.50	224.00	224.00
							Y:	3.00	0.86	0.50	-	-	0.50	0.86	3.00

Route ID	LOB N	Chan N	ROB N	Length (ft)	Slope (ft/ft)	Max Elev (ft)		1.	2.	3.	4.	5.	6.	7.	8.
RWIS35	0.035	0.015	0.035	5,280.00	0.0006	-	X:	-	-	95.50	95.50	453.50	453.50	549.00	549.00
							Y:	3.00	1.46	0.50	-	-	0.50	1.46	3.00
RWIS51	0.035	0.015	0.035	5,280.00	0.0003	-	X:	-	-	45.00	45.00	229.00	229.00	274.00	274.00
							Y:	3.00	0.95	0.50	-	-	0.50	0.95	3.00
RWIS59	0.035	0.015	0.035	5,280.00	0.0016	-	X:	-	-	67.00	67.00	332.00	332.00	399.00	399.00
							Y:	3.00	1.17	0.50	-	-	0.50	1.17	3.00
RWIS83	0.035	0.015	0.035	5,280.00	0.0028	-	X:	-	-	76.50	76.50	372.50	372.50	449.00	449.00
							Y:	3.00	1.27	0.50	-	-	0.50	1.27	3.00
RWIS91	0.035	0.015	0.035	5,280.00	0.0030	-	X:	-	-	54.50	54.50	269.50	269.50	324.00	324.00
							Y:	3.00	1.04	0.50	-	-	0.50	1.04	3.00
RWISA	0.035	0.015	0.035	6,868.00	0.0013	-	X:	-	-	67.00	67.00	332.00	332.00	399.00	399.00
F							Y:	3.00	1.17	0.50	-	-	0.50	1.17	3.00
RWISG	0.035	0.015	0.035	4,300.00	0.0009	-	X:	-	-	9.50	9.50	40.50	40.50	50.00	50.00
C							Y:	3.00	0.60	0.50	-	-	0.50	0.60	3.00
RWISL	0.035	0.015	0.035	2,651.00	0.0039	-	X:	-	-	35.50	35.50	188.50	188.50	224.00	224.00
O							Y:	3.00	0.86	0.50	-	-	0.50	0.86	3.00
RWMD0	0.035	0.015	0.035	5,792.00	0.0019	-	X:	-	-	16.50	16.50	107.50	107.50	124.00	124.00
7							Y:	3.00	0.66	0.50	-	-	0.50	0.66	3.00
RWMD3	0.035	0.015	0.035	5,280.00	0.0009	-	X:	-	-	48.00	48.00	251.00	251.00	299.00	299.00
5							Y:	3.00	0.98	0.50	-	-	0.50	0.98	3.00
RWMD4	0.035	0.015	0.035	5,280.00	0.0004	-	X:	-	-	95.50	95.50	453.50	453.50	549.00	549.00
3							Y:	3.00	1.46	0.50	-	-	0.50	1.46	3.00
RWMD5	0.035	0.015	0.035	5,280.00	0.0002	-	X:	-	-	57.50	57.50	291.50	291.50	349.00	349.00
1							Y:	3.00	1.08	0.50	-	-	0.50	1.08	3.00
RWMD5	0.035	0.015	0.035	5,280.00	0.0014	-	X:	-	-	57.50	57.50	291.50	291.50	349.00	349.00
9							Y:	3.00	1.08	0.50	-	-	0.50	1.08	3.00
RWMD6	0.035	0.015	0.035	5,280.00	0.0015	-	X:	-	-	67.00	67.00	332.00	332.00	399.00	399.00
7							Y:	3.00	1.17	0.50	-	-	0.50	1.17	3.00
RWMD7	0.035	0.015	0.035	5,280.00	0.0015	-	X:	-	-	95.50	95.50	453.50	453.50	549.00	549.00
5							Y:	3.00	1.46	0.50	-	-	0.50	1.46	3.00
RWMD8	0.035	0.015	0.035	5,280.00	0.0026	-	X:	-	-	57.50	57.50	291.50	291.50	349.00	349.00
3							Y:	3.00	1.08	0.50	-	-	0.50	1.08	3.00
RWMD9	0.035	0.015	0.035	5,280.00	0.0021	-	X:	-	-	57.50	57.50	291.50	291.50	349.00	349.00
1							Y:	3.00	1.08	0.50	-	-	0.50	1.08	3.00

Route ID	LOB N	Chan N	ROB N	Length (ft)	Slope (ft/ft)	Max Elev (ft)		1.	2.	3.	4.	5.	6.	7.	8.
RWMD	0.035	0.015	0.035	6,890.00	0.0027	-	X:	-	-	48.00	48.00	251.00	251.00	299.00	299.00
AF							Y:	3.00	0.98	0.50	-	-	0.50	0.98	3.00
RWMD	0.035	0.015	0.035	5,280.00	0.0023	-	X:	-	-	35.50	35.50	188.50	188.50	224.00	224.00
AV							Y:	3.00	0.86	0.50	-	-	0.50	0.86	3.00
RWMDL	0.035	0.015	0.035	4,061.00	0.0010	-	X:	-	-	45.00	45.00	229.00	229.00	274.00	274.00
O							Y:	3.00	0.95	0.50	-	-	0.50	0.95	3.00
RWNO3	0.035	0.015	0.035	5,280.00	0.0001	-	X:	-	-	76.50	76.50	372.50	372.50	449.00	449.00
5							Y:	3.00	1.27	0.50	-	-	0.50	1.27	3.00
RWNO4	0.035	0.015	0.035	5,280.00	0.0021	-	X:	-	-	114.50	114.50	534.50	534.50	649.00	649.00
3							Y:	3.00	1.64	0.50	-	-	0.50	1.64	3.00
RWNO5	0.035	0.015	0.035	5,280.00	0.0019	-	X:	-	-	65.50	65.50	382.50	382.50	448.00	448.00
1							Y:	3.00	1.16	0.50	-	-	0.50	1.16	3.00
RWNO5	0.035	0.015	0.035	5,280.00	0.0040	-	X:	-	-	58.50	58.50	339.50	339.50	398.00	398.00
9							Y:	3.00	1.08	0.50	-	-	0.50	1.08	3.00
RWNO6	0.035	0.015	0.035	5,280.00	0.0029	-	X:	-	-	58.50	58.50	339.50	339.50	398.00	398.00
7							Y:	3.00	1.08	0.50	-	-	0.50	1.08	3.00
RWNO7	0.035	0.015	0.035	5,280.00	0.0030	-	X:	-	-	16.50	16.50	107.50	107.50	124.00	124.00
5							Y:	3.00	0.66	0.50	-	-	0.50	0.66	3.00
RWNO8	0.035	0.015	0.035	5,280.00	0.0048	-	X:	-	-	35.50	35.50	188.50	188.50	224.00	224.00
3							Y:	3.00	0.86	0.50	-	-	0.50	0.86	3.00
RWNO9	0.035	0.015	0.035	5,280.00	0.0014	-	X:	-	-	45.00	45.00	229.00	229.00	274.00	274.00
1							Y:	3.00	0.95	0.50	-	-	0.50	0.95	3.00
RWNOL	0.035	0.015	0.035	3,480.00	0.0026	-	X:	-	-	45.00	45.00	229.00	229.00	274.00	274.00
O							Y:	3.00	0.95	0.50	-	-	0.50	0.95	3.00
RWOL4	0.035	0.015	0.035	5,280.00	0.0022	-	X:	-	-	35.50	35.50	188.50	188.50	224.00	224.00
3							Y:	3.00	0.86	0.50	-	-	0.50	0.86	3.00
RWOL5	0.035	0.015	0.035	5,280.00	0.0035	-	X:	-	-	47.50	47.50	230.50	230.50	278.00	278.00
1							Y:	3.00	0.98	0.50	-	-	0.50	0.98	3.00
RWOL5	0.035	0.015	0.035	5,280.00	0.0034	-	X:	-	-	75.50	75.50	402.50	402.50	478.00	478.00
9							Y:	3.00	1.25	0.50	-	-	0.50	1.25	3.00
RWOL6	0.035	0.015	0.035	5,280.00	0.0034	-	X:	-	-	54.50	54.50	273.50	273.50	328.00	328.00
7							Y:	3.00	1.04	0.50	-	-	0.50	1.04	3.00
RWOL7	0.035	0.015	0.035	5,280.00	0.0031	-	X:	-	-	67.00	67.00	332.00	332.00	399.00	399.00
5							Y:	3.00	1.17	0.50	-	-	0.50	1.17	3.00

Route ID	LOB N	Chan N	ROB N	Length (ft)	Slope (ft/ft)	Max Elev (ft)		1.	2.	3.	4.	5.	6.	7.	8.
RWOL8	0.035	0.015	0.035	5,280.00	0.0027	-	X:	-	-	26.00	26.00	148.00	148.00	174.00	174.00
3							Y:	3.00	0.76	0.50	-	-	0.50	0.76	3.00
RWOL9	0.035	0.015	0.035	5,280.00	0.0025	-	X:	-	-	76.50	76.50	372.50	372.50	449.00	449.00
1							Y:	3.00	1.27	0.50	-	-	0.50	1.27	3.00
RWOLL	0.035	0.015	0.035	600.00	0.0039	-	X:	-	-	16.50	16.50	107.50	107.50	124.00	124.00
O							Y:	3.00	0.66	0.50	-	-	0.50	0.66	3.00
RWOW	0.035	0.015	0.035	5,280.00	0.0025	-	X:	-	-	34.00	34.00	184.00	184.00	218.00	218.00
75							Y:	3.00	0.84	0.50	-	-	0.50	0.84	3.00
RWOW	0.035	0.015	0.035	5,280.00	0.0029	-	X:	-	-	20.00	20.00	98.00	98.00	118.00	118.00
83							Y:	3.00	0.70	0.50	-	-	0.50	0.70	3.00
RWOW	0.035	0.015	0.035	5,280.00	0.0038	-	X:	-	-	7.00	7.00	43.00	43.00	50.00	50.00
91							Y:	3.00	0.57	0.50	-	-	0.50	0.57	3.00
RWPE5	0.035	0.015	0.035	5,280.00	0.0042	-	X:	-	-	79.50	79.50	468.50	468.50	548.00	548.00
9							Y:	3.00	1.30	0.50	-	-	0.50	1.30	3.00
RWPE6	0.035	0.015	0.035	5,280.00	0.0026	-	X:	-	-	51.50	51.50	296.50	296.50	348.00	348.00
7							Y:	3.00	1.02	0.50	-	-	0.50	1.02	3.00
RWPE7	0.035	0.015	0.035	5,280.00	0.0035	-	X:	-	-	86.00	86.00	413.00	413.00	499.00	499.00
5							Y:	3.00	1.36	0.50	-	-	0.50	1.36	3.00
RWPE8	0.035	0.015	0.035	5,280.00	0.0023	-	X:	-	-	57.50	57.50	291.50	291.50	349.00	349.00
3							Y:	3.00	1.08	0.50	-	-	0.50	1.08	3.00
RWPE9	0.035	0.015	0.035	5,280.00	0.0037	-	X:	-	-	67.00	67.00	332.00	332.00	399.00	399.00
1							Y:	3.00	1.17	0.50	-	-	0.50	1.17	3.00
RWPEL	0.035	0.015	0.035	1,289.00	0.0017	-	X:	-	-	73.50	73.50	350.50	350.50	424.00	424.00
O							Y:	3.00	1.23	0.50	-	-	0.50	1.23	3.00
RWRI07	0.035	0.015	0.035	5,402.00	0.0013	-	X:	-	-	16.50	16.50	107.50	107.50	124.00	124.00
							Y:	3.00	0.66	0.50	-	-	0.50	0.66	3.00
RWRIA	0.035	0.015	0.035	10,904.00	0.0007	-	X:	-	-	22.00	22.00	103.00	103.00	125.00	125.00
F							Y:	3.00	0.72	0.50	-	-	0.50	0.72	3.00
RWTB7	0.035	0.015	0.035	5,280.00	0.0027	-	X:	-	-	48.00	48.00	251.00	251.00	299.00	299.00
5							Y:	3.00	0.98	0.50	-	-	0.50	0.98	3.00
RWTB8	0.035	0.015	0.035	5,280.00	0.0034	-	X:	-	-	76.50	76.50	372.50	372.50	449.00	449.00
3							Y:	3.00	1.27	0.50	-	-	0.50	1.27	3.00
RWTBL	0.035	0.015	0.035	2,002.00	0.0030	-	X:	-	-	16.50	16.50	107.50	107.50	124.00	124.00
O							Y:	3.00	0.66	0.50	-	-	0.50	0.66	3.00

Route ID	LOB N	Chan N	ROB N	Length (ft)	Slope (ft/ft)	Max Elev (ft)		1.	2.	3.	4.	5.	6.	7.	8.
RWTM0	0.035	0.015	0.035	2,719.00	0.0029	-	X:	-	-	16.50	16.50	107.50	107.50	124.00	124.00
7							Y:	3.00	0.66	0.50	-	-	0.50	0.66	3.00
RWTM3	0.035	0.015	0.035	5,280.00	0.0008	-	X:	-	-	16.50	16.50	107.50	107.50	124.00	124.00
5							Y:	3.00	0.66	0.50	-	-	0.50	0.66	3.00
RWTM4	0.035	0.015	0.035	5,280.00	0.0003	-	X:	-	-	38.50	38.50	210.50	210.50	249.00	249.00
3							Y:	3.00	0.88	0.50	-	-	0.50	0.88	3.00
RWTM5	0.035	0.015	0.035	5,280.00	0.0004	-	X:	-	-	48.00	48.00	251.00	251.00	299.00	299.00
1							Y:	3.00	0.98	0.50	-	-	0.50	0.98	3.00
RWTM5	0.035	0.015	0.035	5,280.00	0.0013	-	X:	-	-	48.00	48.00	251.00	251.00	299.00	299.00
9							Y:	3.00	0.98	0.50	-	-	0.50	0.98	3.00
RWTM6	0.035	0.015	0.035	5,280.00	0.0015	-	X:	-	-	95.50	95.50	453.50	453.50	549.00	549.00
7							Y:	3.00	1.46	0.50	-	-	0.50	1.46	3.00
RWTM7	0.035	0.015	0.035	5,280.00	0.0023	-	X:	-	-	76.50	76.50	372.50	372.50	449.00	449.00
5							Y:	3.00	1.27	0.50	-	-	0.50	1.27	3.00
RWTM8	0.035	0.015	0.035	5,280.00	0.0025	-	X:	-	-	76.50	76.50	372.50	372.50	449.00	449.00
3							Y:	3.00	1.27	0.50	-	-	0.50	1.27	3.00
RWTM9	0.035	0.015	0.035	5,280.00	0.0028	-	X:	-	-	114.50	114.50	534.50	534.50	649.00	649.00
1							Y:	3.00	1.64	0.50	-	-	0.50	1.64	3.00
RWTMA	0.035	0.015	0.035	8,219.00	0.0020	-	X:	-	-	26.00	26.00	148.00	148.00	174.00	174.00
F							Y:	3.00	0.76	0.50	-	-	0.50	0.76	3.00
RWTML	0.035	0.015	0.035	2,623.00	0.0015	-	X:	-	-	16.50	16.50	107.50	107.50	124.00	124.00
O							Y:	3.00	0.66	0.50	-	-	0.50	0.66	3.00
RWTMR	0.035	0.015	0.035	2,601.00	0.0023	-	X:	-	-	9.50	9.50	40.50	40.50	50.00	50.00
I							Y:	3.00	0.60	0.50	-	-	0.50	0.60	3.00

Route ID	Shape	Length (ft)	Slope (ft/ft)	Manning's N	Diameter (in)	Height (ft)	Width (ft)	Side Slope (h/v)
KINEMATIC WAVE								
Major Basin MV								
RP27BH	PIPE	5,220.50	0.0034	0.015	57	-	-	-
RP27CB	PIPE	5,335.60	0.0034	0.015	57	-	-	-
RP27GC	PIPE	1,762.70	0.0034	0.015	60	-	-	-
RP27GL	PIPE	5,259.80	0.0034	0.015	54	-	-	-
RP27IN	PIPE	959.20	0.0034	0.015	72	-	-	-
RP27IS	PIPE	5,210.30	0.0034	0.015	57	-	-	-
RP27MD	PIPE	5,006.40	0.0034	0.015	66	-	-	-
RP27TM	PIPE	3,087.90	0.0034	0.015	60	-	-	-
RP31GC	PIPE	2,505.70	0.0040	0.015	72	-	-	-
RP31TM	PIPE	3,861.80	0.0037	0.015	72	-	-	-
RP35BH	PIPE	5,146.80	0.0037	0.015	69	-	-	-
RP35CB	PIPE	5,248.50	0.0037	0.015	69	-	-	-
RP35GC	PIPE	2,327.10	0.0035	0.015	36	-	-	-
RP35GL	PIPE	5,335.20	0.0037	0.015	53	-	-	-
RP35IN	PIPE	936.50	0.0037	0.015	93	-	-	-
RP35IS	PIPE	2,082.70	0.0037	0.015	73	-	-	-
RP35MD	PIPE	5,093.40	0.0037	0.015	77	-	-	-
RP35NO	PIPE	5,191.00	0.0037	0.015	42	-	-	-
RP35TM	PIPE	3,050.80	0.0035	0.015	36	-	-	-
RP35TM	PIPE	3,050.80	0.0037	0.015	72	-	-	-
RP39GR	PIPE	2,845.80	0.0040	0.015	72	-	-	-
RP39IS	PIPE	2,428.30	0.0035	0.015	72	-	-	-

Route ID	Shape	Length (ft)	Slope (ft/ft)	Manning's N	Diameter (in)	Height (ft)	Width (ft)	Side Slope (h/v)
RP43BH	PIPE	5,294.70	0.0035	0.015	85	-	-	-
RP43CB	PIPE	5,171.70	0.0035	0.015	85	-	-	-
RP43GC	PIPE	2,347.10	0.0035	0.015	73	-	-	-
RP43GL	PIPE	5,336.40	0.0035	0.015	71	-	-	-
RP43IN	PIPE	1,217.10	0.0035	0.015	102	-	-	-
RP43IS	PIPE	5,374.00	0.0035	0.015	60	-	-	-
RP43MD	PIPE	5,212.10	0.0035	0.015	102	-	-	-
RP43NO	PIPE	5,100.30	0.0035	0.015	48	-	-	-
RP43TM	PIPE	2,923.50	0.0035	0.015	87	-	-	-
RP51BH	PIPE	2,773.20	0.0118	0.015	85	-	-	-
RP51IN	PIPE	730.80	0.0033	0.015	84	-	-	-
RP51MD	PIPE	5,322.00	0.0033	0.015	72	-	-	-
RP51ML	PIPE	2,089.30	0.0033	0.015	72	-	-	-
RP51TM	PIPE	2,802.60	0.0033	0.015	72	-	-	-
RP59BR	PIPE	1,230.70	0.0020	0.015	78	-	-	-
RP59GC	PIPE	1,242.60	0.0037	0.015	81	-	-	-
RP59IN	PIPE	846.00	0.0037	0.015	90	-	-	-
RP59MD	PIPE	5,205.60	0.0037	0.015	84	-	-	-
RP59OL	PIPE	1,446.20	0.0031	0.015	42	-	-	-
RP59PE	PIPE	5,357.80	0.0020	0.015	30	-	-	-
RP59TM	PIPE	4,111.10	0.0037	0.015	72	-	-	-
RP63OL	PIPE	3,877.90	0.0040	0.015	30	-	-	-
RP67IN	PIPE	824.40	0.0027	0.015	90	-	-	-
RP67MD	PIPE	5,217.70	0.0027	0.015	78	-	-	-
RP67MV	PIPE	2,678.50	0.0039	0.015	60	-	-	-

Route ID	Shape	Length (ft)	Slope (ft/ft)	Manning's N	Diameter (in)	Height (ft)	Width (ft)	Side Slope (h/v)
RP67OL	PIPE	2,627.30	0.0027	0.015	66	-	-	-
RP67TM	PIPE	5,268.00	0.0027	0.015	66	-	-	-
RP67TM	PIPE	5,268.00	0.0027	0.015	66	-	-	-
RP75IN	PIPE	811.40	0.0022	0.015	90	-	-	-
RP75MD	PIPE	5,222.00	0.0022	0.015	84	-	-	-
RP75OL	PIPE	5,035.10	0.0047	0.015	60	-	-	-
RP75TM	PIPE	5,255.70	0.0022	0.015	60	-	-	-
RP83GL	PIPE	2,643.70	0.0036	0.015	72	-	-	-
RP83IN	PIPE	823.60	0.0019	0.015	90	-	-	-
RP83IS	PIPE	5,208.30	0.0019	0.015	24	-	-	-
RP83MD	PIPE	5,058.50	0.0019	0.015	84	-	-	-
RP83TM	PIPE	5,329.50	0.0019	0.015	72	-	-	-
RP91IN	PIPE	728.60	0.0020	0.015	90	-	-	-
RP91MD	PIPE	5,270.50	0.0020	0.015	84	-	-	-
RP91TM	PIPE	5,130.40	0.0020	0.015	72	-	-	-
RPBH83	PIPE	4,285.90	0.0020	0.015	108	-	-	-
RPBR63	PIPE	528.10	0.0038	0.015	60	-	-	-
RPCB67	PIPE	2,641.70	0.0030	0.015	84	-	-	-
RPCB75	PIPE	4,996.60	0.0022	0.015	102	-	-	-
RPCT75	PIPE	5,320.90	0.0026	0.015	78	-	-	-
RPCT83	PIPE	5,246.10	0.0027	0.015	108	-	-	-
RPCTLO	PIPE	6,333.90	0.0016	0.015	120	-	-	-
RPGC51	PIPE	1,038.10	0.0009	0.015	36	-	-	-
RPGL91	PIPE	5,306.20	0.0034	0.015	84	-	-	-
RPGLLO	PIPE	4,160.40	0.0034	0.015	90	-	-	-

Route ID	Shape	Length (ft)	Slope (ft/ft)	Manning's N	Diameter (in)	Height (ft)	Width (ft)	Side Slope (h/v)
RPGR67	PIPE	4,247.40	0.0018	0.015	108	-	-	-
RPML53	PIPE	1,084.20	0.0010	0.015	72	-	-	-
RPNO59	PIPE	5,145.60	0.0025	0.015	66	-	-	-
RPNO67	PIPE	2,688.40	0.0010	0.015	72	-	-	-
RPNO83	PIPE	5,291.40	0.0038	0.015	60	-	-	-
RPNO91	PIPE	6,940.50	0.0030	0.015	72	-	-	-
RPNOLO	PIPE	2,826.70	0.0007	0.015	60	-	-	-
RPOL59	PIPE	5,116.90	0.0032	0.015	78	-	-	-
RPOL63	PIPE	2,834.90	0.0038	0.015	90	-	-	-
RPOL67	PIPE	2,409.10	0.0033	0.015	90	-	-	-
RPOL71	PIPE	2,746.40	0.0243	0.015	72	-	-	-
RPOL75	PIPE	2,970.80	0.0054	0.015	78	-	-	-
RPOL83	PIPE	4,973.60	0.0010	0.015	90	-	-	-
RPOL91	PIPE	5,183.60	0.0010	0.015	90	-	-	-
RPOW67	PIPE	2,516.60	0.0019	0.015	108	-	-	-
RPOW71	PIPE	2,145.30	0.0029	0.015	66	-	-	-
RPOW75	PIPE	3,390.60	0.0019	0.015	42	-	-	-
RPOW83	PIPE	5,177.70	0.0021	0.015	48	-	-	-
RPPE91	PIPE	5,349.90	0.0061	0.015	48	-	-	-
RPPELO	PIPE	1,593.70	0.0012	0.015	72	-	-	-
RPTB83	PIPE	5,194.30	0.0023	0.015	66	-	-	-
RPTBLO	PIPE	1,531.70	0.0034	0.015	72	-	-	-

Route ID	LOB N	Chan N	ROB N	Length (ft)	Slope (ft/ft)	Max Elev (ft)		1.	2.	3.	4.	5.	6.	7.	8.
NORMAL DEPTH															
Major Basin MV															
RMD07	0.035	0.015	0.035	6,743.00	0.0013	-	X:	-	-	12.50	12.50	62.50	62.50	75.00	75.00
							Y:	3.00	0.62	0.50	-	-	0.50	0.62	3.00
RSBH2	0.035	0.015	0.035	5,280.00	0.0039	-	X:	-	-	26.00	26.00	148.00	148.00	174.00	174.00
7							Y:	3.00	0.76	0.50	-	-	0.50	0.76	3.00
RSBH3	0.035	0.015	0.035	5,280.00	0.0049	-	X:	-	-	67.00	67.00	332.00	332.00	399.00	399.00
5							Y:	3.00	1.17	0.50	-	-	0.50	1.17	3.00
RSBH4	0.035	0.015	0.035	5,280.00	0.0028	-	X:	-	-	57.50	57.50	291.50	291.50	349.00	349.00
3							Y:	3.00	1.08	0.50	-	-	0.50	1.08	3.00
RSBH5	0.035	0.015	0.035	5,280.00	0.0030	-	X:	-	-	61.50	61.50	316.50	316.50	378.00	378.00
1							Y:	3.00	1.12	0.50	-	-	0.50	1.12	3.00
RSBH5	0.035	0.015	0.035	5,280.00	0.0024	-	X:	-	-	30.50	30.50	167.50	167.50	198.00	198.00
9							Y:	3.00	0.80	0.50	-	-	0.50	0.80	3.00
RSBH6	0.035	0.015	0.035	5,280.00	0.0015	-	X:	-	-	75.50	75.50	402.50	402.50	478.00	478.00
7							Y:	3.00	1.25	0.50	-	-	0.50	1.25	3.00
RSBH7	0.035	0.015	0.035	5,280.00	0.0019	-	X:	-	-	68.50	68.50	359.50	359.50	428.00	428.00
5							Y:	3.00	1.18	0.50	-	-	0.50	1.18	3.00
RSBH8	0.035	0.015	0.035	5,280.00	0.0021	-	X:	-	-	72.50	72.50	425.50	425.50	498.00	498.00
3							Y:	3.00	1.23	0.50	-	-	0.50	1.23	3.00
RSBH9	0.035	0.015	0.035	5,280.00	0.0019	-	X:	-	-	37.50	37.50	210.50	210.50	248.00	248.00
1							Y:	3.00	0.88	0.50	-	-	0.50	0.88	3.00
RSBHL	0.035	0.015	0.035	5,164.80	0.0005	-	X:	-	4.00	16.00	34.00	57.00	74.00	86.00	89.00
O							Y:	10.24	9.24	9.00	-	0.20	8.70	8.97	9.94
RSBHRI	0.035	0.015	0.035	5,280.00	0.0015	-	X:	-	-	7.00	7.00	43.00	43.00	50.00	50.00
							Y:	3.00	0.57	0.50	-	-	0.50	0.57	3.00
RSCB2	0.035	0.015	0.035	5,280.00	0.0037	-	X:	-	-	26.00	26.00	148.00	148.00	174.00	174.00
7							Y:	3.00	0.76	0.50	-	-	0.50	0.76	3.00
RSCB3	0.035	0.015	0.035	5,280.00	0.0040	-	X:	-	-	95.50	95.50	453.50	453.50	549.00	549.00
5							Y:	3.00	1.46	0.50	-	-	0.50	1.46	3.00
RSCB4	0.035	0.015	0.035	5,280.00	0.0032	-	X:	-	-	57.50	57.50	291.50	291.50	349.00	349.00
3							Y:	3.00	1.08	0.50	-	-	0.50	1.08	3.00
RSCB5	0.035	0.015	0.035	5,280.00	0.0030	-	X:	-	-	48.00	48.00	251.00	251.00	299.00	299.00
9							Y:	3.00	0.98	0.50	-	-	0.50	0.98	3.00

Route ID	LOB N	Chan N	ROB N	Length (ft)	Slope (ft/ft)	Max Elev (ft)		1.	2.	3.	4.	5.	6.	7.	8.
RSCB6	0.035	0.015	0.035	5,280.00	0.0027	-	X:	-	-	57.50	57.50	291.50	291.50	349.00	349.00
7							Y:	3.00	1.08	0.50	-	-	0.50	1.08	3.00
RSCB7	0.035	0.015	0.035	5,280.00	0.0013	-	X:	-	-	86.00	86.00	413.00	413.00	499.00	499.00
5							Y:	3.00	1.36	0.50	-	-	0.50	1.36	3.00
RSCT67	0.035	0.015	0.035	5,280.00	0.0035	-	X:	-	-	24.50	24.50	155.50	155.50	180.00	180.00
							Y:	3.00	0.74	0.50	-	-	0.50	0.74	3.00
RSCT75	0.035	0.015	0.035	5,280.00	0.0038	-	X:	-	-	57.50	57.50	291.50	291.50	349.00	349.00
							Y:	3.00	1.08	0.50	-	-	0.50	1.08	3.00
RSCT83	0.035	0.015	0.035	5,280.00	0.0030	-	X:	-	-	48.00	48.00	251.00	251.00	299.00	299.00
							Y:	3.00	0.98	0.50	-	-	0.50	0.98	3.00
RSCTL	0.035	0.015	0.035	4,816.20	0.0016	-	X:	-	3.00	13.00	29.00	39.00	55.00	65.00	68.00
O							Y:	9.00	8.00	8.00	-	-	8.00	8.00	9.00
RSGC2	0.035	0.015	0.035	1,755.00	0.0028	-	X:	-	-	16.50	16.50	107.50	107.50	124.00	124.00
7							Y:	3.00	0.66	0.50	-	-	0.50	0.66	3.00
RSGC3	0.035	0.015	0.035	1,973.00	0.0033	-	X:	-	-	16.50	16.50	107.50	107.50	124.00	124.00
5							Y:	3.00	0.66	0.50	-	-	0.50	0.66	3.00
RSGC4	0.035	0.015	0.035	2,155.00	0.0038	-	X:	-	-	57.50	57.50	291.50	291.50	349.00	349.00
3							Y:	3.00	1.08	0.50	-	-	0.50	1.08	3.00
RSGC5	0.035	0.015	0.035	2,155.00	0.0045	-	X:	-	-	67.00	67.00	332.00	332.00	399.00	399.00
1							Y:	3.00	1.17	0.50	-	-	0.50	1.17	3.00
RSGC5	0.035	0.015	0.035	2,502.00	0.0025	-	X:	-	-	57.50	57.50	291.50	291.50	349.00	349.00
9							Y:	3.00	1.08	0.50	-	-	0.50	1.08	3.00
RSGC6	0.035	0.015	0.035	5,280.00	0.0017	-	X:	-	-	76.50	76.50	372.50	372.50	449.00	449.00
7							Y:	3.00	1.27	0.50	-	-	0.50	1.27	3.00
RSGCG	0.035	0.015	0.035	3,104.00	0.0029	-	X:	-	-	48.00	48.00	251.00	251.00	299.00	299.00
R							Y:	3.00	0.98	0.50	-	-	0.50	0.98	3.00
RSGL27	0.035	0.015	0.035	5,280.00	0.0040	-	X:	-	-	26.00	26.00	148.00	148.00	174.00	174.00
							Y:	3.00	0.76	0.50	-	-	0.50	0.76	3.00
RSGL35	0.035	0.015	0.035	5,280.00	0.0032	-	X:	-	-	76.50	76.50	372.50	372.50	449.00	449.00
							Y:	3.00	1.27	0.50	-	-	0.50	1.27	3.00
RSGL43	0.035	0.015	0.035	5,280.00	0.0034	-	X:	-	-	57.50	57.50	291.50	291.50	349.00	349.00
							Y:	3.00	1.08	0.50	-	-	0.50	1.08	3.00
RSGL51	0.035	0.015	0.035	5,280.00	0.0027	-	X:	-	-	61.50	61.50	316.50	316.50	378.00	378.00
							Y:	3.00	1.12	0.50	-	-	0.50	1.12	3.00

Route ID	LOB N	Chan N	ROB N	Length (ft)	Slope (ft/ft)	Max Elev (ft)		1.	2.	3.	4.	5.	6.	7.	8.
RSGL59	0.035	0.015	0.035	5,280.00	0.0018	-	X:	-	-	37.50	37.50	210.50	210.50	248.00	248.00
							Y:	3.00	0.88	0.50	-	-	0.50	0.88	3.00
RSGL67	0.035	0.015	0.035	2,640.00	0.0052	-	X:	-	-	27.50	27.50	132.50	132.50	160.00	160.00
							Y:	3.00	0.78	0.50	-	-	0.50	0.78	3.00
RSGL75	0.035	0.015	0.035	2,640.00	0.0035	-	X:	-	-	54.50	54.50	283.50	283.50	338.00	338.00
							Y:	3.00	1.04	0.50	-	-	0.50	1.04	3.00
RSGL83	0.035	0.015	0.035	2,640.00	0.0041	-	X:	-	-	38.50	38.50	241.50	241.50	280.00	280.00
							Y:	3.00	0.88	0.50	-	-	0.50	0.88	3.00
RSGL91	0.035	0.015	0.035	5,280.00	0.0032	-	X:	-	-	38.50	38.50	241.50	241.50	280.00	280.00
							Y:	3.00	0.88	0.50	-	-	0.50	0.88	3.00
RSGLL O	0.035	0.015	0.035	2,381.20	0.0023	-	X:	-	4.00	16.00	26.00	34.00	44.00	56.00	59.00
							Y:	6.24	5.24	5.00	-	0.20	5.20	5.44	6.44
RSGR2 7	0.035	0.015	0.035	4,632.00	0.0019	-	X:	-	-	33.00	33.00	215.00	215.00	248.00	248.00
							Y:	3.00	0.83	0.50	-	-	0.50	0.83	3.00
RSGR3 5	0.035	0.015	0.035	7,095.00	0.0033	-	X:	-	-	48.00	48.00	251.00	251.00	299.00	299.00
							Y:	3.00	0.98	0.50	-	-	0.50	0.98	3.00
RSGR4 3	0.035	0.015	0.035	7,370.00	0.0013	-	X:	-	-	31.50	31.50	143.50	143.50	175.00	175.00
							Y:	3.00	0.82	0.50	-	-	0.50	0.82	3.00
RSGR8 3	0.035	0.015	0.035	7,145.00	0.0003	-	X:	-	-	67.00	67.00	332.00	332.00	399.00	399.00
							Y:	3.00	1.17	0.50	-	-	0.50	1.17	3.00
RSGR9 1	0.035	0.015	0.035	4,969.00	0.0024	-	X:	-	-	57.50	57.50	291.50	291.50	349.00	349.00
							Y:	3.00	1.08	0.50	-	-	0.50	1.08	3.00
RSIN07	0.035	0.015	0.035	844.00	0.0008	-	X:	-	-	16.50	16.50	107.50	107.50	124.00	124.00
							Y:	3.00	0.66	0.50	-	-	0.50	0.66	3.00
RSIN35	0.035	0.015	0.035	1,116.00	0.0019	-	X:	-	-	76.50	76.50	372.50	372.50	449.00	449.00
							Y:	3.00	1.27	0.50	-	-	0.50	1.27	3.00
RSIN43	0.035	0.015	0.035	900.00	0.0042	-	X:	-	-	57.50	57.50	291.50	291.50	349.00	349.00
							Y:	3.00	1.08	0.50	-	-	0.50	1.08	3.00
RSIN51	0.035	0.015	0.035	1,143.00	0.0007	-	X:	-	-	54.50	54.50	269.50	269.50	324.00	324.00
							Y:	3.00	1.04	0.50	-	-	0.50	1.04	3.00
RSIN59	0.035	0.015	0.035	730.00	0.0047	-	X:	-	-	35.50	35.50	188.50	188.50	224.00	224.00
							Y:	3.00	0.86	0.50	-	-	0.50	0.86	3.00
RSIN67	0.035	0.015	0.035	741.00	0.0027	-	X:	-	-	12.50	12.50	62.50	62.50	75.00	75.00
							Y:	3.00	0.62	0.50	-	-	0.50	0.62	3.00

Route ID	LOB N	Chan N	ROB N	Length (ft)	Slope (ft/ft)	Max Elev (ft)		1.	2.	3.	4.	5.	6.	7.	8.
RSIN75	0.035	0.015	0.035	731.00	0.0022	-	X:	-	-	29.00	29.00	170.00	170.00	199.00	199.00
							Y:	3.00	0.79	0.50	-	-	0.50	0.79	3.00
RSIN91	0.035	0.015	0.035	535.00	0.0019	-	X:	-	-	9.50	9.50	40.50	40.50	50.00	50.00
							Y:	3.00	0.60	0.50	-	-	0.50	0.60	3.00
RSIN99	0.035	0.015	0.035	6,080.00	0.0019	-	X:	-	-	16.50	16.50	107.50	107.50	124.00	124.00
							Y:	3.00	0.66	0.50	-	-	0.50	0.66	3.00
RSINAF	0.035	0.015	0.035	1,317.00	0.0022	-	X:	-	-	22.00	22.00	103.00	103.00	125.00	125.00
							Y:	3.00	0.72	0.50	-	-	0.50	0.72	3.00
RSINAV	0.035	0.015	0.035	1,317.00	0.0022	-	X:	-	-	16.50	16.50	107.50	107.50	124.00	124.00
							Y:	3.00	0.66	0.50	-	-	0.50	0.66	3.00
RSINLO	0.035	0.015	0.035	1,374.40	0.0019	-	X:	-	3.00	5.00	39.00	47.00	51.00	65.00	68.00
							Y:	18.00	17.00	17.00	-	0.16	17.16	17.44	18.44
RSIS07	0.035	0.015	0.035	5,280.00	0.0026	-	X:	-	-	26.00	26.00	148.00	148.00	174.00	174.00
							Y:	3.00	0.76	0.50	-	-	0.50	0.76	3.00
RSIS27	0.035	0.015	0.035	5,280.00	0.0038	-	X:	-	-	26.00	26.00	148.00	148.00	174.00	174.00
							Y:	3.00	0.76	0.50	-	-	0.50	0.76	3.00
RSIS35	0.035	0.015	0.035	5,280.00	0.0038	-	X:	-	-	86.00	86.00	413.00	413.00	499.00	499.00
							Y:	3.00	1.36	0.50	-	-	0.50	1.36	3.00
RSIS43	0.035	0.015	0.035	5,280.00	0.0048	-	X:	-	-	16.50	16.50	107.50	107.50	124.00	124.00
							Y:	3.00	0.66	0.50	-	-	0.50	0.66	3.00
RSIS51	0.035	0.015	0.035	5,280.00	0.0037	-	X:	-	-	38.50	38.50	210.50	210.50	249.00	249.00
							Y:	3.00	0.88	0.50	-	-	0.50	0.88	3.00
RSIS59	0.035	0.015	0.035	5,280.00	0.0030	-	X:	-	-	67.00	67.00	332.00	332.00	399.00	399.00
							Y:	3.00	1.17	0.50	-	-	0.50	1.17	3.00
RSIS83	0.035	0.015	0.035	5,280.00	0.0022	-	X:	-	-	57.50	57.50	291.50	291.50	349.00	349.00
							Y:	3.00	1.08	0.50	-	-	0.50	1.08	3.00
RSIS91	0.035	0.015	0.035	5,280.00	0.0017	-	X:	-	-	57.50	57.50	291.50	291.50	349.00	349.00
							Y:	3.00	1.08	0.50	-	-	0.50	1.08	3.00
RSIS99	0.035	0.015	0.035	5,280.00	0.0020	-	X:	-	-	16.50	16.50	107.50	107.50	124.00	124.00
							Y:	3.00	0.66	0.50	-	-	0.50	0.66	3.00
RSISGC	0.035	0.015	0.035	1,231.00	0.0022	-	X:	-	-	31.50	31.50	143.50	143.50	175.00	175.00
							Y:	3.00	0.82	0.50	-	-	0.50	0.82	3.00
RSISLO	0.035	0.015	0.035	5,582.50	0.0010	-	X:	-	4.00	14.00	29.00	49.00	64.00	94.00	97.00
							Y:	11.20	10.20	10.00	-	0.40	10.40	11.84	12.84

Route ID	LOB N	Chan N	ROB N	Length (ft)	Slope (ft/ft)	Max Elev (ft)		1.	2.	3.	4.	5.	6.	7.	8.
RSMD07	0.035	0.015	0.035	5,280.00	0.0006	-	X:	-	-	26.00	26.00	148.00	148.00	174.00	174.00
							Y:	3.00	0.76	0.50	-	-	0.50	0.76	3.00
RSMD27	0.035	0.015	0.035	5,280.00	0.0034	-	X:	-	-	16.50	16.50	107.50	107.50	124.00	124.00
							Y:	3.00	0.66	0.50	-	-	0.50	0.66	3.00
RSMD35	0.035	0.015	0.035	5,280.00	0.0036	-	X:	-	-	67.00	67.00	332.00	332.00	399.00	399.00
							Y:	3.00	1.17	0.50	-	-	0.50	1.17	3.00
RSMD43	0.035	0.015	0.035	5,280.00	0.0037	-	X:	-	-	67.00	67.00	332.00	332.00	399.00	399.00
							Y:	3.00	1.17	0.50	-	-	0.50	1.17	3.00
RSMD51	0.035	0.015	0.035	5,280.00	0.0035	-	X:	-	-	54.50	54.50	269.50	269.50	324.00	324.00
							Y:	3.00	1.04	0.50	-	-	0.50	1.04	3.00
RSMD59	0.035	0.015	0.035	5,280.00	0.0035	-	X:	-	-	38.50	38.50	210.50	210.50	249.00	249.00
							Y:	3.00	0.88	0.50	-	-	0.50	0.88	3.00
RSMD67	0.035	0.015	0.035	5,280.00	0.0035	-	X:	-	-	48.00	48.00	251.00	251.00	299.00	299.00
							Y:	3.00	0.98	0.50	-	-	0.50	0.98	3.00
RSMD75	0.035	0.015	0.035	5,280.00	0.0027	-	X:	-	-	67.00	67.00	332.00	332.00	399.00	399.00
							Y:	3.00	1.17	0.50	-	-	0.50	1.17	3.00
RSMD83	0.035	0.015	0.035	5,280.00	0.0028	-	X:	-	-	29.00	29.00	170.00	170.00	199.00	199.00
							Y:	3.00	0.79	0.50	-	-	0.50	0.79	3.00
RSMD91	0.035	0.015	0.035	5,280.00	0.0021	-	X:	-	-	57.50	57.50	291.50	291.50	349.00	349.00
							Y:	3.00	1.08	0.50	-	-	0.50	1.08	3.00
RSMD99	0.035	0.015	0.035	5,508.00	0.0010	-	X:	-	-	16.50	16.50	107.50	107.50	124.00	124.00
							Y:	3.00	0.66	0.50	-	-	0.50	0.66	3.00
RSMDAV	0.035	0.015	0.035	5,280.00	0.0017	-	X:	-	-	38.50	38.50	210.50	210.50	249.00	249.00
							Y:	3.00	0.88	0.50	-	-	0.50	0.88	3.00
RSMDLO	0.035	0.015	0.035	5,728.50	0.0012	-	X:	-	3.00	5.00	39.00	47.00	51.00	65.00	68.00
							Y:	18.00	17.00	17.00	-	0.16	17.16	17.44	18.44
RSNO35	0.035	0.015	0.035	5,280.00	0.0036	-	X:	-	-	67.00	67.00	332.00	332.00	399.00	399.00
							Y:	3.00	1.17	0.50	-	-	0.50	1.17	3.00
RSNO43	0.035	0.015	0.035	5,280.00	0.0035	-	X:	-	-	67.00	67.00	332.00	332.00	399.00	399.00
							Y:	3.00	1.17	0.50	-	-	0.50	1.17	3.00
RSNO51	0.035	0.015	0.035	5,280.00	0.0019	-	X:	-	-	54.50	54.50	273.50	273.50	328.00	328.00
							Y:	3.00	1.04	0.50	-	-	0.50	1.04	3.00
RSNO59	0.035	0.015	0.035	5,280.00	0.0024	-	X:	-	-	86.50	86.50	511.50	511.50	598.00	598.00
							Y:	3.00	1.36	0.50	-	-	0.50	1.36	3.00

Route ID	LOB N	Chan N	ROB N	Length (ft)	Slope (ft/ft)	Max Elev (ft)		1.	2.	3.	4.	5.	6.	7.	8.
RSNO67	0.035	0.015	0.035	5,280.00	0.0019	-	X:	-	-	58.50	58.50	339.50	339.50	398.00	398.00
							Y:	3.00	1.08	0.50	-	-	0.50	1.08	3.00
RSNO75	0.035	0.015	0.035	5,280.00	0.0019	-	X:	-	-	29.00	29.00	170.00	170.00	199.00	199.00
							Y:	3.00	0.79	0.50	-	-	0.50	0.79	3.00
RSNO83	0.035	0.015	0.035	5,280.00	0.0040	-	X:	-	-	35.50	35.50	188.50	188.50	224.00	224.00
							Y:	3.00	0.86	0.50	-	-	0.50	0.86	3.00
RSNO91	0.035	0.015	0.035	5,280.00	0.0029	-	X:	-	-	48.00	48.00	251.00	251.00	299.00	299.00
							Y:	3.00	0.98	0.50	-	-	0.50	0.98	3.00
RSNOLO	0.035	0.015	0.035	6,135.80	0.0023	-	X:	-	4.00	16.00	26.00	34.00	44.00	56.00	59.00
							Y:	6.24	5.24	5.00	-	0.20	5.20	5.44	6.44
RSOL51	0.035	0.015	0.035	5,280.00	0.0031	-	X:	-	-	68.50	68.50	359.50	359.50	428.00	428.00
							Y:	3.00	1.18	0.50	-	-	0.50	1.18	3.00
RSOL59	0.035	0.015	0.035	5,280.00	0.0023	-	X:	-	-	72.50	72.50	425.50	425.50	498.00	498.00
							Y:	3.00	1.23	0.50	-	-	0.50	1.23	3.00
RSOL67	0.035	0.015	0.035	5,280.00	0.0031	-	X:	-	-	45.50	45.50	284.50	284.50	330.00	330.00
							Y:	3.00	0.96	0.50	-	-	0.50	0.96	3.00
RSOL75	0.035	0.015	0.035	5,280.00	0.0027	-	X:	-	-	57.50	57.50	291.50	291.50	349.00	349.00
							Y:	3.00	1.08	0.50	-	-	0.50	1.08	3.00
RSOL83	0.035	0.015	0.035	5,280.00	0.0031	-	X:	-	-	67.00	67.00	332.00	332.00	399.00	399.00
							Y:	3.00	1.17	0.50	-	-	0.50	1.17	3.00
RSOL91	0.035	0.015	0.035	5,280.00	0.0019	-	X:	-	-	86.00	86.00	413.00	413.00	499.00	499.00
							Y:	3.00	1.36	0.50	-	-	0.50	1.36	3.00
RSOLLO	0.035	0.015	0.035	5,324.40	0.0018	-	X:	-	3.00	13.00	33.00	63.00	83.00	93.00	96.00
							Y:	11.00	10.00	10.00	-	-	10.00	10.00	11.00
RSOW67	0.035	0.015	0.035	2,640.00	0.0035	-	X:	-	-	17.50	17.50	112.50	112.50	130.00	130.00
							Y:	3.00	0.68	0.50	-	-	0.50	0.68	3.00
RSOW75	0.035	0.015	0.035	2,640.00	0.0025	-	X:	-	-	47.50	47.50	240.50	240.50	288.00	288.00
							Y:	3.00	0.98	0.50	-	-	0.50	0.98	3.00
RSPE59	0.035	0.015	0.035	5,280.00	0.0037	-	X:	-	-	58.50	58.50	339.50	339.50	398.00	398.00
							Y:	3.00	1.08	0.50	-	-	0.50	1.08	3.00
RSPE67	0.035	0.015	0.035	5,280.00	0.0022	-	X:	-	-	58.50	58.50	339.50	339.50	398.00	398.00
							Y:	3.00	1.08	0.50	-	-	0.50	1.08	3.00
RSPE75	0.035	0.015	0.035	5,280.00	0.0027	-	X:	-	-	57.50	57.50	291.50	291.50	349.00	349.00
							Y:	3.00	1.08	0.50	-	-	0.50	1.08	3.00

Route ID	LOB N	Chan N	ROB N	Length (ft)	Slope (ft/ft)	Max Elev (ft)		1.	2.	3.	4.	5.	6.	7.	8.
RSPE83	0.035	0.015	0.035	5,280.00	0.0023	-	X:	-	-	76.50	76.50	372.50	372.50	449.00	449.00
							Y:	3.00	1.27	0.50	-	-	0.50	1.27	3.00
RSPEL	0.035	0.015	0.035	2,703.70	0.0018	-	X:	-	3.00	13.00	25.00	35.00	47.00	57.00	60.00
O							Y:	7.00	6.00	6.00	-	-	6.00	6.00	7.00
RSRI07	0.035	0.015	0.035	2,640.00	0.0008	-	X:	-	-	26.00	26.00	148.00	148.00	174.00	174.00
							Y:	3.00	0.76	0.50	-	-	0.50	0.76	3.00
RSTB83	0.035	0.015	0.035	5,280.00	0.0023	-	X:	-	-	48.00	48.00	251.00	251.00	299.00	299.00
							Y:	3.00	0.98	0.50	-	-	0.50	0.98	3.00
RSTM0	0.035	0.015	0.035	2,640.00	0.0019	-	X:	-	-	16.50	16.50	107.50	107.50	124.00	124.00
7							Y:	3.00	0.66	0.50	-	-	0.50	0.66	3.00
RSTM3	0.035	0.015	0.035	3,050.00	0.0051	-	X:	-	-	16.50	16.50	107.50	107.50	124.00	124.00
5							Y:	3.00	0.66	0.50	-	-	0.50	0.66	3.00
RSTM4	0.035	0.015	0.035	3,050.00	0.0045	-	X:	-	-	16.50	16.50	107.50	107.50	124.00	124.00
3							Y:	3.00	0.66	0.50	-	-	0.50	0.66	3.00
RSTM5	0.035	0.015	0.035	2,916.00	0.0044	-	X:	-	-	29.00	29.00	170.00	170.00	199.00	199.00
1							Y:	3.00	0.79	0.50	-	-	0.50	0.79	3.00
RSTM5	0.035	0.015	0.035	2,752.00	0.0054	-	X:	-	-	29.00	29.00	170.00	170.00	199.00	199.00
9							Y:	3.00	0.79	0.50	-	-	0.50	0.79	3.00
RSTM6	0.035	0.015	0.035	5,280.00	0.0029	-	X:	-	-	9.50	9.50	40.50	40.50	50.00	50.00
7							Y:	3.00	0.60	0.50	-	-	0.50	0.60	3.00
RSTM7	0.035	0.015	0.035	5,280.00	0.0027	-	X:	-	-	38.50	38.50	210.50	210.50	249.00	249.00
5							Y:	3.00	0.88	0.50	-	-	0.50	0.88	3.00
RSTM8	0.035	0.015	0.035	5,280.00	0.0023	-	X:	-	-	76.50	76.50	372.50	372.50	449.00	449.00
3							Y:	3.00	1.27	0.50	-	-	0.50	1.27	3.00
RSTM9	0.035	0.015	0.035	5,280.00	0.0021	-	X:	-	-	67.00	67.00	332.00	332.00	399.00	399.00
1							Y:	3.00	1.17	0.50	-	-	0.50	1.17	3.00
RSTM9	0.035	0.015	0.035	5,280.00	0.0009	-	X:	-	-	16.50	16.50	107.50	107.50	124.00	124.00
9							Y:	3.00	0.66	0.50	-	-	0.50	0.66	3.00
RSTML	0.035	0.015	0.035	5,309.40	0.0010	-	X:	-	4.00	14.00	29.00	44.00	59.00	73.00	76.00
O							Y:	11.20	10.20	10.00	-	0.30	10.30	10.58	11.58
RWBH3	0.035	0.015	0.035	5,280.00	0.0002	-	X:	-	-	86.00	86.00	413.00	413.00	499.00	499.00
5							Y:	3.00	1.36	0.50	-	-	0.50	1.36	3.00
RWBH4	0.035	0.015	0.035	5,280.00	0.0001	-	X:	-	-	133.50	133.50	615.50	615.50	749.00	749.00
3							Y:	3.00	1.84	0.50	-	-	0.50	1.84	3.00

Route ID	LOB N	Chan N	ROB N	Length (ft)	Slope (ft/ft)	Max Elev (ft)		1.	2.	3.	4.	5.	6.	7.	8.
RWBH5	0.035	0.015	0.035	5,280.00	0.0016	-	X:	-	-	75.50	75.50	402.50	402.50	478.00	478.00
1							Y:	3.00	1.25	0.50	-	-	0.50	1.25	3.00
RWBH5	0.035	0.015	0.035	5,280.00	0.0025	-	X:	-	-	47.50	47.50	230.50	230.50	278.00	278.00
9							Y:	3.00	0.98	0.50	-	-	0.50	0.98	3.00
RWBH6	0.035	0.015	0.035	5,280.00	0.0028	-	X:	-	-	68.50	68.50	359.50	359.50	428.00	428.00
7							Y:	3.00	1.18	0.50	-	-	0.50	1.18	3.00
RWBH7	0.035	0.015	0.035	5,280.00	0.0038	-	X:	-	-	61.50	61.50	316.50	316.50	378.00	378.00
5							Y:	3.00	1.12	0.50	-	-	0.50	1.12	3.00
RWBH8	0.035	0.015	0.035	5,280.00	0.0034	-	X:	-	-	47.50	47.50	230.50	230.50	278.00	278.00
3							Y:	3.00	0.98	0.50	-	-	0.50	0.98	3.00
RWBH9	0.035	0.015	0.035	6,508.20	0.0008	-	X:	-	4.00	18.00	66.00	126.00	162.00	172.00	176.00
1							Y:	13.14	12.14	12.00	-	0.60	9.15	9.25	10.25
RWBH9	0.035	0.015	0.035	1,074.60	0.0011	-	X:	-	4.00	18.00	46.50	135.50	153.40	167.40	171.40
9							Y:	8.26	7.26	7.12	-	0.85	5.32	5.46	6.46
RWBHL	0.035	0.015	0.035	4,110.00	0.0011	-	X:	-	4.00	18.00	46.50	135.50	153.40	167.40	171.40
O							Y:	8.26	7.26	7.12	-	0.85	5.32	5.46	6.46
RWBHN	0.035	0.015	0.035	3,230.70	0.0010	-	X:	-	4.00	18.00	46.50	135.50	153.40	167.40	171.40
R							Y:	8.26	7.26	7.12	-	0.85	5.32	5.46	6.46
RWBHR	0.035	0.015	0.035	2,391.50	0.0010	-	X:	-	4.00	18.00	46.50	135.50	153.40	167.40	171.40
I							Y:	8.26	7.26	7.12	-	0.85	5.32	5.46	6.46
RWCB3	0.035	0.015	0.035	5,280.00	0.0006	-	X:	-	-	105.00	105.00	494.00	494.00	599.00	599.00
5							Y:	3.00	1.55	0.50	-	-	0.50	1.55	3.00
RWCB4	0.035	0.015	0.035	5,280.00	0.0001	-	X:	-	-	86.00	86.00	413.00	413.00	499.00	499.00
3							Y:	3.00	1.36	0.50	-	-	0.50	1.36	3.00
RWCB5	0.035	0.015	0.035	5,280.00	0.0014	-	X:	-	-	16.50	16.50	107.50	107.50	124.00	124.00
1							Y:	3.00	0.66	0.50	-	-	0.50	0.66	3.00
RWCB5	0.035	0.015	0.035	5,280.00	0.0023	-	X:	-	-	48.00	48.00	251.00	251.00	299.00	299.00
9							Y:	3.00	0.98	0.50	-	-	0.50	0.98	3.00
RWCB6	0.035	0.015	0.035	5,280.00	0.0025	-	X:	-	-	67.00	67.00	332.00	332.00	399.00	399.00
7							Y:	3.00	1.17	0.50	-	-	0.50	1.17	3.00
RWCB7	0.035	0.015	0.035	5,280.00	0.0024	-	X:	-	-	86.00	86.00	413.00	413.00	499.00	499.00
5							Y:	3.00	1.36	0.50	-	-	0.50	1.36	3.00
RWCB9	0.035	0.015	0.035	5,280.00	0.0036	-	X:	-	-	57.50	57.50	291.50	291.50	349.00	349.00
1							Y:	3.00	1.08	0.50	-	-	0.50	1.08	3.00

Route ID	LOB N	Chan N	ROB N	Length (ft)	Slope (ft/ft)	Max Elev (ft)		1.	2.	3.	4.	5.	6.	7.	8.
RWCBL	0.035	0.015	0.035	4,287.00	0.0028	-	X:	-	-	48.00	48.00	251.00	251.00	299.00	299.00
O							Y:	3.00	0.98	0.50	-	-	0.50	0.98	3.00
RWCBN	0.035	0.015	0.035	3,883.00	0.0010	-	X:	-	-	16.50	16.50	107.50	107.50	124.00	124.00
R							Y:	3.00	0.66	0.50	-	-	0.50	0.66	3.00
RWCBR	0.035	0.015	0.035	3,883.00	0.0021	-	X:	-	-	16.50	16.50	107.50	107.50	124.00	124.00
I							Y:	3.00	0.66	0.50	-	-	0.50	0.66	3.00
RWCT6	0.035	0.015	0.035	5,280.00	0.0041	-	X:	-	-	33.50	33.50	144.50	144.50	178.00	178.00
7							Y:	3.00	0.84	0.50	-	-	0.50	0.84	3.00
RWCT7	0.035	0.015	0.035	5,280.00	0.0030	-	X:	-	-	76.50	76.50	372.50	372.50	449.00	449.00
5							Y:	3.00	1.27	0.50	-	-	0.50	1.27	3.00
RWCT8	0.035	0.015	0.035	5,280.00	0.0026	-	X:	-	-	57.50	57.50	291.50	291.50	349.00	349.00
3							Y:	3.00	1.08	0.50	-	-	0.50	1.08	3.00
RWCTL	0.035	0.015	0.035	6,650.00	0.0048	-	X:	-	-	76.50	76.50	372.50	372.50	449.00	449.00
O							Y:	3.00	1.27	0.50	-	-	0.50	1.27	3.00
RWGC4	0.035	0.015	0.035	6,627.00	0.0009	-	X:	-	-	9.50	9.50	40.50	40.50	50.00	50.00
3							Y:	3.00	0.60	0.50	-	-	0.50	0.60	3.00
RWGC5	0.035	0.015	0.035	5,614.00	0.0005	-	X:	-	-	19.00	19.00	81.00	81.00	100.00	100.00
1							Y:	3.00	0.69	0.50	-	-	0.50	0.69	3.00
RWGC5	0.035	0.015	0.035	1,296.00	0.0012	-	X:	-	-	9.50	9.50	40.50	40.50	50.00	50.00
3							Y:	3.00	0.60	0.50	-	-	0.50	0.60	3.00
RWGC6	0.035	0.015	0.035	3,841.00	0.0016	-	X:	-	-	48.00	48.00	251.00	251.00	299.00	299.00
7							Y:	3.00	0.98	0.50	-	-	0.50	0.98	3.00
RWGC8	0.035	0.015	0.035	6,563.00	0.0010	-	X:	-	3.00	13.00	13.00	31.00	31.00	41.00	44.00
3							Y:	10.00	9.00	9.00	-	-	9.00	9.00	10.00
RWGL5	0.035	0.015	0.035	5,280.00	0.0011	-	X:	-	-	61.50	61.50	316.50	316.50	378.00	378.00
1							Y:	3.00	1.12	0.50	-	-	0.50	1.12	3.00
RWGL5	0.035	0.015	0.035	5,280.00	0.0031	-	X:	-	-	68.50	68.50	359.50	359.50	428.00	428.00
9							Y:	3.00	1.18	0.50	-	-	0.50	1.18	3.00
RWGL6	0.035	0.015	0.035	5,280.00	0.0037	-	X:	-	-	41.50	41.50	218.50	218.50	260.00	260.00
7							Y:	3.00	0.92	0.50	-	-	0.50	0.92	3.00
RWGL7	0.035	0.015	0.035	5,280.00	0.0034	-	X:	-	-	47.00	47.00	283.00	283.00	330.00	330.00
5							Y:	3.00	0.97	0.50	-	-	0.50	0.97	3.00
RWGL8	0.035	0.015	0.035	5,280.00	0.0032	-	X:	-	-	47.00	47.00	283.00	283.00	330.00	330.00
3							Y:	3.00	0.97	0.50	-	-	0.50	0.97	3.00

Route ID	LOB N	Chan N	ROB N	Length (ft)	Slope (ft/ft)	Max Elev (ft)		1.	2.	3.	4.	5.	6.	7.	8.
RWGL9	0.035	0.015	0.035	5,280.00	0.0032	-	X:	-	-	33.00	33.00	197.00	197.00	230.00	230.00
1							Y:	3.00	0.83	0.50	-	-	0.50	0.83	3.00
RWGLL	0.035	0.015	0.035	4,441.00	0.0027	-	X:	-	-	19.00	19.00	111.00	111.00	130.00	130.00
O							Y:	3.00	0.69	0.50	-	-	0.50	0.69	3.00
RWGR6	0.035	0.015	0.035	7,222.00	0.0008	-	X:	-	-	75.50	75.50	402.50	402.50	478.00	478.00
7							Y:	3.00	1.25	0.50	-	-	0.50	1.25	3.00
RWGR7	0.035	0.015	0.035	7,409.00	0.0008	-	X:	-	-	44.50	44.50	253.50	253.50	298.00	298.00
5							Y:	3.00	0.94	0.50	-	-	0.50	0.94	3.00
RWIN07	0.035	0.015	0.035	6,474.80	0.0017	-	X:	-	0.10	18.00	36.00	66.00	84.00	102.00	102.10
							Y:	18.00	17.05	9.00	-	-	9.00	17.05	18.00
RWIN35	0.035	0.015	0.035	5,280.00	0.0005	-	X:	-	-	9.50	9.50	40.50	40.50	50.00	50.00
							Y:	3.00	0.60	0.50	-	-	0.50	0.60	3.00
RWIN43	0.035	0.015	0.035	5,280.00	0.0008	-	X:	-	-	9.50	9.50	40.50	40.50	50.00	50.00
							Y:	3.00	0.60	0.50	-	-	0.50	0.60	3.00
RWIN51	0.035	0.015	0.035	5,289.80	0.0027	-	X:	-	0.10	18.00	36.00	66.00	84.00	102.00	102.10
							Y:	18.00	17.05	9.00	-	-	9.00	17.05	18.00
RWIN59	0.035	0.015	0.035	5,296.70	0.0017	-	X:	-	0.10	18.00	36.00	66.00	84.00	102.00	102.10
							Y:	18.00	17.05	9.00	-	-	9.00	17.05	18.00
RWIN67	0.035	0.015	0.035	5,145.20	0.0012	-	X:	-	0.10	18.00	36.00	66.00	84.00	102.00	102.10
							Y:	18.00	17.05	9.00	-	-	9.00	17.05	18.00
RWIN75	0.035	0.015	0.035	5,237.10	0.0020	-	X:	-	0.10	18.00	36.00	66.00	84.00	102.00	102.10
							Y:	18.00	17.05	9.00	-	-	9.00	17.05	18.00
RWIN83	0.035	0.015	0.035	5,396.30	0.0016	-	X:	-	0.10	18.00	36.00	66.00	84.00	102.00	102.10
							Y:	18.00	17.05	9.00	-	-	9.00	17.05	18.00
RWIN91	0.035	0.015	0.035	5,217.20	0.0016	-	X:	-	0.10	18.00	36.00	66.00	84.00	102.00	102.10
							Y:	18.00	17.05	9.00	-	-	9.00	17.05	18.00
RWINA	0.035	0.015	0.035	7,360.20	0.0009	-	X:	-	0.10	18.00	36.00	66.00	84.00	102.00	102.10
F							Y:	18.00	17.05	9.00	-	-	9.00	17.05	18.00
RWINA	0.035	0.015	0.035	5,173.60	0.0019	-	X:	-	0.10	18.00	36.00	66.00	84.00	102.00	102.10
V							Y:	18.00	17.05	9.00	-	-	9.00	17.05	18.00
RWINL	0.035	0.015	0.035	4,152.70	0.0008	-	X:	-	0.10	18.00	36.00	66.00	84.00	102.00	102.10
O							Y:	18.00	17.05	9.00	-	-	9.00	17.05	18.00
RWIS07	0.035	0.015	0.035	5,280.00	0.0022	-	X:	-	-	35.50	35.50	188.50	188.50	224.00	224.00
							Y:	3.00	0.86	0.50	-	-	0.50	0.86	3.00

Route ID	LOB N	Chan N	ROB N	Length (ft)	Slope (ft/ft)	Max Elev (ft)		1.	2.	3.	4.	5.	6.	7.	8.
RWIS35	0.035	0.015	0.035	5,280.00	0.0006	-	X:	-	-	95.50	95.50	453.50	453.50	549.00	549.00
							Y:	3.00	1.46	0.50	-	-	0.50	1.46	3.00
RWIS51	0.035	0.015	0.035	5,280.00	0.0003	-	X:	-	-	45.00	45.00	229.00	229.00	274.00	274.00
							Y:	3.00	0.95	0.50	-	-	0.50	0.95	3.00
RWIS59	0.035	0.015	0.035	5,280.00	0.0016	-	X:	-	-	67.00	67.00	332.00	332.00	399.00	399.00
							Y:	3.00	1.17	0.50	-	-	0.50	1.17	3.00
RWIS83	0.035	0.015	0.035	5,280.00	0.0028	-	X:	-	-	76.50	76.50	372.50	372.50	449.00	449.00
							Y:	3.00	1.27	0.50	-	-	0.50	1.27	3.00
RWIS91	0.035	0.015	0.035	5,280.00	0.0030	-	X:	-	-	54.50	54.50	269.50	269.50	324.00	324.00
							Y:	3.00	1.04	0.50	-	-	0.50	1.04	3.00
RWISA	0.035	0.015	0.035	6,868.00	0.0013	-	X:	-	-	67.00	67.00	332.00	332.00	399.00	399.00
F							Y:	3.00	1.17	0.50	-	-	0.50	1.17	3.00
RWISG	0.035	0.015	0.035	4,300.00	0.0009	-	X:	-	-	9.50	9.50	40.50	40.50	50.00	50.00
C							Y:	3.00	0.60	0.50	-	-	0.50	0.60	3.00
RWISL	0.035	0.015	0.035	2,651.00	0.0039	-	X:	-	-	35.50	35.50	188.50	188.50	224.00	224.00
O							Y:	3.00	0.86	0.50	-	-	0.50	0.86	3.00
RWMD0	0.035	0.015	0.035	5,792.00	0.0019	-	X:	-	-	16.50	16.50	107.50	107.50	124.00	124.00
7							Y:	3.00	0.66	0.50	-	-	0.50	0.66	3.00
RWMD3	0.035	0.015	0.035	5,280.00	0.0009	-	X:	-	-	48.00	48.00	251.00	251.00	299.00	299.00
5							Y:	3.00	0.98	0.50	-	-	0.50	0.98	3.00
RWMD4	0.035	0.015	0.035	5,280.00	0.0004	-	X:	-	-	95.50	95.50	453.50	453.50	549.00	549.00
3							Y:	3.00	1.46	0.50	-	-	0.50	1.46	3.00
RWMD5	0.035	0.015	0.035	5,280.00	0.0002	-	X:	-	-	57.50	57.50	291.50	291.50	349.00	349.00
1							Y:	3.00	1.08	0.50	-	-	0.50	1.08	3.00
RWMD5	0.035	0.015	0.035	5,280.00	0.0014	-	X:	-	-	57.50	57.50	291.50	291.50	349.00	349.00
9							Y:	3.00	1.08	0.50	-	-	0.50	1.08	3.00
RWMD6	0.035	0.015	0.035	5,280.00	0.0015	-	X:	-	-	67.00	67.00	332.00	332.00	399.00	399.00
7							Y:	3.00	1.17	0.50	-	-	0.50	1.17	3.00
RWMD7	0.035	0.015	0.035	5,280.00	0.0015	-	X:	-	-	95.50	95.50	453.50	453.50	549.00	549.00
5							Y:	3.00	1.46	0.50	-	-	0.50	1.46	3.00
RWMD8	0.035	0.015	0.035	5,280.00	0.0026	-	X:	-	-	57.50	57.50	291.50	291.50	349.00	349.00
3							Y:	3.00	1.08	0.50	-	-	0.50	1.08	3.00
RWMD9	0.035	0.015	0.035	5,280.00	0.0021	-	X:	-	-	57.50	57.50	291.50	291.50	349.00	349.00
1							Y:	3.00	1.08	0.50	-	-	0.50	1.08	3.00

Route ID	LOB N	Chan N	ROB N	Length (ft)	Slope (ft/ft)	Max Elev (ft)		1.	2.	3.	4.	5.	6.	7.	8.
RWMD	0.035	0.015	0.035	6,890.00	0.0027	-	X:	-	-	48.00	48.00	251.00	251.00	299.00	299.00
AF							Y:	3.00	0.98	0.50	-	-	0.50	0.98	3.00
RWMD	0.035	0.015	0.035	5,280.00	0.0023	-	X:	-	-	35.50	35.50	188.50	188.50	224.00	224.00
AV							Y:	3.00	0.86	0.50	-	-	0.50	0.86	3.00
RWMDL	0.035	0.015	0.035	4,061.00	0.0010	-	X:	-	-	45.00	45.00	229.00	229.00	274.00	274.00
O							Y:	3.00	0.95	0.50	-	-	0.50	0.95	3.00
RWNO3	0.035	0.015	0.035	5,280.00	0.0001	-	X:	-	-	76.50	76.50	372.50	372.50	449.00	449.00
5							Y:	3.00	1.27	0.50	-	-	0.50	1.27	3.00
RWNO4	0.035	0.015	0.035	5,280.00	0.0021	-	X:	-	-	114.50	114.50	534.50	534.50	649.00	649.00
3							Y:	3.00	1.64	0.50	-	-	0.50	1.64	3.00
RWNO5	0.035	0.015	0.035	5,280.00	0.0019	-	X:	-	-	65.50	65.50	382.50	382.50	448.00	448.00
1							Y:	3.00	1.16	0.50	-	-	0.50	1.16	3.00
RWNO5	0.035	0.015	0.035	5,280.00	0.0040	-	X:	-	-	58.50	58.50	339.50	339.50	398.00	398.00
9							Y:	3.00	1.08	0.50	-	-	0.50	1.08	3.00
RWNO6	0.035	0.015	0.035	5,280.00	0.0029	-	X:	-	-	58.50	58.50	339.50	339.50	398.00	398.00
7							Y:	3.00	1.08	0.50	-	-	0.50	1.08	3.00
RWNO7	0.035	0.015	0.035	5,280.00	0.0030	-	X:	-	-	16.50	16.50	107.50	107.50	124.00	124.00
5							Y:	3.00	0.66	0.50	-	-	0.50	0.66	3.00
RWNO8	0.035	0.015	0.035	5,280.00	0.0048	-	X:	-	-	35.50	35.50	188.50	188.50	224.00	224.00
3							Y:	3.00	0.86	0.50	-	-	0.50	0.86	3.00
RWNO9	0.035	0.015	0.035	5,280.00	0.0014	-	X:	-	-	45.00	45.00	229.00	229.00	274.00	274.00
1							Y:	3.00	0.95	0.50	-	-	0.50	0.95	3.00
RWNOL	0.035	0.015	0.035	3,480.00	0.0026	-	X:	-	-	45.00	45.00	229.00	229.00	274.00	274.00
O							Y:	3.00	0.95	0.50	-	-	0.50	0.95	3.00
RWOL4	0.035	0.015	0.035	5,280.00	0.0022	-	X:	-	-	35.50	35.50	188.50	188.50	224.00	224.00
3							Y:	3.00	0.86	0.50	-	-	0.50	0.86	3.00
RWOL5	0.035	0.015	0.035	5,280.00	0.0035	-	X:	-	-	47.50	47.50	230.50	230.50	278.00	278.00
1							Y:	3.00	0.98	0.50	-	-	0.50	0.98	3.00
RWOL5	0.035	0.015	0.035	5,280.00	0.0034	-	X:	-	-	75.50	75.50	402.50	402.50	478.00	478.00
9							Y:	3.00	1.25	0.50	-	-	0.50	1.25	3.00
RWOL6	0.035	0.015	0.035	5,280.00	0.0034	-	X:	-	-	54.50	54.50	273.50	273.50	328.00	328.00
7							Y:	3.00	1.04	0.50	-	-	0.50	1.04	3.00
RWOL7	0.035	0.015	0.035	5,280.00	0.0031	-	X:	-	-	67.00	67.00	332.00	332.00	399.00	399.00
5							Y:	3.00	1.17	0.50	-	-	0.50	1.17	3.00

Route ID	LOB N	Chan N	ROB N	Length (ft)	Slope (ft/ft)	Max Elev (ft)		1.	2.	3.	4.	5.	6.	7.	8.
RWOL8	0.035	0.015	0.035	5,280.00	0.0027	-	X:	-	-	26.00	26.00	148.00	148.00	174.00	174.00
3							Y:	3.00	0.76	0.50	-	-	0.50	0.76	3.00
RWOL9	0.035	0.015	0.035	5,280.00	0.0025	-	X:	-	-	76.50	76.50	372.50	372.50	449.00	449.00
1							Y:	3.00	1.27	0.50	-	-	0.50	1.27	3.00
RWOLL	0.035	0.015	0.035	600.00	0.0039	-	X:	-	-	16.50	16.50	107.50	107.50	124.00	124.00
O							Y:	3.00	0.66	0.50	-	-	0.50	0.66	3.00
RWOW	0.035	0.015	0.035	5,280.00	0.0025	-	X:	-	-	34.00	34.00	184.00	184.00	218.00	218.00
75							Y:	3.00	0.84	0.50	-	-	0.50	0.84	3.00
RWOW	0.035	0.015	0.035	5,280.00	0.0029	-	X:	-	-	20.00	20.00	98.00	98.00	118.00	118.00
83							Y:	3.00	0.70	0.50	-	-	0.50	0.70	3.00
RWOW	0.035	0.015	0.035	5,280.00	0.0038	-	X:	-	-	7.00	7.00	43.00	43.00	50.00	50.00
91							Y:	3.00	0.57	0.50	-	-	0.50	0.57	3.00
RWPE5	0.035	0.015	0.035	5,280.00	0.0042	-	X:	-	-	79.50	79.50	468.50	468.50	548.00	548.00
9							Y:	3.00	1.30	0.50	-	-	0.50	1.30	3.00
RWPE6	0.035	0.015	0.035	5,280.00	0.0026	-	X:	-	-	51.50	51.50	296.50	296.50	348.00	348.00
7							Y:	3.00	1.02	0.50	-	-	0.50	1.02	3.00
RWPE7	0.035	0.015	0.035	5,280.00	0.0035	-	X:	-	-	86.00	86.00	413.00	413.00	499.00	499.00
5							Y:	3.00	1.36	0.50	-	-	0.50	1.36	3.00
RWPE8	0.035	0.015	0.035	5,280.00	0.0023	-	X:	-	-	57.50	57.50	291.50	291.50	349.00	349.00
3							Y:	3.00	1.08	0.50	-	-	0.50	1.08	3.00
RWPE9	0.035	0.015	0.035	5,280.00	0.0037	-	X:	-	-	67.00	67.00	332.00	332.00	399.00	399.00
1							Y:	3.00	1.17	0.50	-	-	0.50	1.17	3.00
RWPEL	0.035	0.015	0.035	1,289.00	0.0017	-	X:	-	-	73.50	73.50	350.50	350.50	424.00	424.00
O							Y:	3.00	1.23	0.50	-	-	0.50	1.23	3.00
RWRI07	0.035	0.015	0.035	5,402.00	0.0013	-	X:	-	-	16.50	16.50	107.50	107.50	124.00	124.00
							Y:	3.00	0.66	0.50	-	-	0.50	0.66	3.00
RWRIA	0.035	0.015	0.035	10,904.00	0.0007	-	X:	-	-	22.00	22.00	103.00	103.00	125.00	125.00
F							Y:	3.00	0.72	0.50	-	-	0.50	0.72	3.00
RWTB7	0.035	0.015	0.035	5,280.00	0.0027	-	X:	-	-	48.00	48.00	251.00	251.00	299.00	299.00
5							Y:	3.00	0.98	0.50	-	-	0.50	0.98	3.00
RWTB8	0.035	0.015	0.035	5,280.00	0.0034	-	X:	-	-	76.50	76.50	372.50	372.50	449.00	449.00
3							Y:	3.00	1.27	0.50	-	-	0.50	1.27	3.00
RWTBL	0.035	0.015	0.035	2,002.00	0.0030	-	X:	-	-	16.50	16.50	107.50	107.50	124.00	124.00
O							Y:	3.00	0.66	0.50	-	-	0.50	0.66	3.00

Route ID	LOB N	Chan N	ROB N	Length (ft)	Slope (ft/ft)	Max Elev (ft)		1.	2.	3.	4.	5.	6.	7.	8.
RWTM0	0.035	0.015	0.035	2,719.00	0.0029	-	X:	-	-	16.50	16.50	107.50	107.50	124.00	124.00
7							Y:	3.00	0.66	0.50	-	-	0.50	0.66	3.00
RWTM3	0.035	0.015	0.035	5,280.00	0.0008	-	X:	-	-	16.50	16.50	107.50	107.50	124.00	124.00
5							Y:	3.00	0.66	0.50	-	-	0.50	0.66	3.00
RWTM4	0.035	0.015	0.035	5,280.00	0.0003	-	X:	-	-	38.50	38.50	210.50	210.50	249.00	249.00
3							Y:	3.00	0.88	0.50	-	-	0.50	0.88	3.00
RWTM5	0.035	0.015	0.035	5,280.00	0.0004	-	X:	-	-	48.00	48.00	251.00	251.00	299.00	299.00
1							Y:	3.00	0.98	0.50	-	-	0.50	0.98	3.00
RWTM5	0.035	0.015	0.035	5,280.00	0.0013	-	X:	-	-	48.00	48.00	251.00	251.00	299.00	299.00
9							Y:	3.00	0.98	0.50	-	-	0.50	0.98	3.00
RWTM6	0.035	0.015	0.035	5,280.00	0.0015	-	X:	-	-	95.50	95.50	453.50	453.50	549.00	549.00
7							Y:	3.00	1.46	0.50	-	-	0.50	1.46	3.00
RWTM7	0.035	0.015	0.035	5,280.00	0.0023	-	X:	-	-	76.50	76.50	372.50	372.50	449.00	449.00
5							Y:	3.00	1.27	0.50	-	-	0.50	1.27	3.00
RWTM8	0.035	0.015	0.035	5,280.00	0.0025	-	X:	-	-	76.50	76.50	372.50	372.50	449.00	449.00
3							Y:	3.00	1.27	0.50	-	-	0.50	1.27	3.00
RWTM9	0.035	0.015	0.035	5,280.00	0.0028	-	X:	-	-	114.50	114.50	534.50	534.50	649.00	649.00
1							Y:	3.00	1.64	0.50	-	-	0.50	1.64	3.00
RWTMA	0.035	0.015	0.035	8,219.00	0.0020	-	X:	-	-	26.00	26.00	148.00	148.00	174.00	174.00
F							Y:	3.00	0.76	0.50	-	-	0.50	0.76	3.00
RWTML	0.035	0.015	0.035	2,623.00	0.0015	-	X:	-	-	16.50	16.50	107.50	107.50	124.00	124.00
O							Y:	3.00	0.66	0.50	-	-	0.50	0.66	3.00
RWTMR	0.035	0.015	0.035	2,601.00	0.0023	-	X:	-	-	9.50	9.50	40.50	40.50	50.00	50.00
I							Y:	3.00	0.60	0.50	-	-	0.50	0.60	3.00

Kimley-Horn and Associates, Inc.

Project: ***Glendale Stormwater Management Plan***
Subject: **Storm Drain Route Parameters**
Model: **Maryvale**
Designed by: **ZRS** Date 11/4/2009 KHA Project No. 091910009
Checked by: **MAF** Date 12/14/2009 City of Glendale No. 089017

Objective: To determine the storm drain route parameters, namely diameter, slope and length

Existing Storm Drain Routing Reaches

Pipe Diversion ID	E/W Street Name	N/S Street Name	City	Mile Street Diameter	1/2 Mile Street Diameter	Length	Slope	Mile Street Storm Drain Capacity	1/2 Mile Street Storm Drain Capacity	Combined Storm Drain Capacity	Combined Storm Drain Diameter*
RP91IN	McDowell Road	91st Avenue	Maryvale	90	---	729	0.0020	345	---	345	---
RP83IN	McDowell Road	83rd Avenue	Maryvale	90	---	824	0.0019	340	---	340	---
RP75IN	McDowell Road	75th Avenue	Maryvale	90	---	811	0.0022	364	---	364	---
RP27IN	McDowell Road	27th Avenue	Maryvale	72	---	959	0.0034	246	---	246	---
RP35IN	McDowell Road	35th Avenue	Maryvale	51	84	936	0.0037	102	405	507	93
RP67IN	McDowell Road	67th Avenue	Maryvale	90	---	824	0.0027	400	---	400	---
RP43IN	McDowell Road	43rd Avenue	Maryvale	69	84	1217	0.0035	225	404	629	102
RP51IN	McDowell Road	51st Avenue	Maryvale	84	---	731	0.0033	368	---	368	---
RP59IN	McDowell Road	59th Avenue	Maryvale	90	---	846	0.0037	468	---	468	---
RP91MD	Thomas Road	91st Avenue	Maryvale	84	---	5271	0.0020	287	---	287	---
RP83MD	Thomas Road	83rd Avenue	Maryvale	84	---	5059	0.0019	283	---	283	---
RP75MD	Thomas Road	75th Avenue	Maryvale	84	---	5222	0.0022	303	---	303	---
RP35MD	Thomas Road	35th Avenue	Maryvale	48	66	5093	0.0037	87	213	300	77
RP67MD	Thomas Road	67th Avenue	Maryvale	78	---	5218	0.0027	273	---	273	---
RP43MD	Thomas Road	43rd Avenue	Maryvale	69	84	5212	0.0035	225	404	629	102
RP51MD	Thomas Road	51st Avenue	Maryvale	72	---	5322	0.0033	244	---	244	---
RP59MD	Thomas Road	59th Avenue	Maryvale	84	---	5206	0.0037	389	---	389	---
RP31TM	Grand Canal	31st Avenue	Maryvale	72	---	3862	0.0037	257	---	257	---
RP35TM	Grand Canal	35th Avenue	Maryvale	36	---	3051	0.0035	40	---	40	---
RP43TM	Grand Canal	43rd Avenue	Maryvale	60	72	2923	0.0035	154	251	406	87
RP51TM	Grand Canal	51st Avenue	Maryvale	72	---	2803	0.0033	133	---	133	---
RP59TM	Grand Canal	59th Avenue	Maryvale	72	---	4111	0.0037	258	---	258	---
RP27TM	Grand Canal	27th Avenue	Maryvale	60	---	3088	0.0034	151	---	151	---
RPGC51	Grand Canal	53rd Avenue	Maryvale	36	---	1038	0.0009	20	---	20	---
RP91TM	Indian School Road	91st Avenue	Maryvale	72	---	5130	0.0020	190	---	190	---
RP83TM	Indian School Road	83rd Avenue	Maryvale	72	---	5330	0.0019	187	---	187	---
RP75TM	Indian School Road	75th Avenue	Maryvale	60	---	5256	0.0022	123	---	123	---
RP27GC	Indian School Road	27th Avenue	Maryvale	60	---	1763	0.0034	151	---	151	---
RP67TM	Indian School Road	67th Avenue	Maryvale	66	---	5268	0.0027	175	---	175	---
RP59GC	Indian School Road	59th Avenue	Maryvale	81	---	1243	0.0037	353	---	353	---
RP51ML	Indian School Road	51st Avenue	Maryvale	72	---	2089	0.0033	244	---	244	---
RP31GC	Indian School Road	31st Avenue	Maryvale	72	---	2506	0.0040	268	---	268	---
RP35GC	Indian School Road	35th Avenue	Maryvale	36	---	2327	0.0037	40	---	40	---

Kimley-Horn and Associates, Inc.

Project: ***Glendale Stormwater Management Plan***
Subject: **Storm Drain Route Parameters**
Model: **Maryvale**
Designed by: **ZRS** Date 11/4/2009 KHA Project No. 091910009
Checked by: **MAF** Date 12/14/2009 City of Glendale No. 089017

Objective: To determine the storm drain route parameters, namely diameter, slope and length

Existing Storm Drain Routing Reaches

Pipe Diversion ID	E/W Street Name	N/S Street Name	City	Mile Street Diameter	1/2 Mile Street Diameter	Length	Slope	Mile Street Storm Drain Capacity	1/2 Mile Street Storm Drain Capacity	Combined Storm Drain Capacity	Combined Storm Drain Diameter*
RP43GC	Indian School Road	43rd Avenue	Maryvale	60	72	2347	0.0035	154	251	406	87
RP83IS	Camelback Road	83rd Avenue	Maryvale	24	---	5208	0.0019	10	---	10	---
RP27IS	Camelback Road	27th Avenue	Maryvale	57	---	5210	0.0034	132	---	132	---
RP35IS	Camelback Road	35th Avenue	Maryvale	36	66	5141	0.0037	40	213	253	73
RP39GR	Camelback Road	39th Avenue	Maryvale	72	---	2846	0.0040	268	---	268	---
RP43IS	Camelback Road	43rd Avenue	Maryvale	60	---	5374	0.0035	155	---	155	---
RP43CB	Bethany Home Road	43rd Avenue	Maryvale	54	72	5172	0.0035	117	268	385	85
RP35CB	Bethany Home Road	35th Avenue	Maryvale	42	60	5248	0.0037	61	165	226	69
RP27CB	Bethany Home Road	27th Avenue	Maryvale	57	---	5336	0.0034	132	---	132	---
RPGLLO	Glendale Avenue	91st Avenue	Glendale	90	---	4160	0.0034	449	---	449	---
RPGL91	Glendale Avenue	83rd Avenue	Glendale	84	---	5306	0.0034	374	---	374	---
RP51BH	Glendale Avenue	47th Avenue	Glendale	60	48	2773	0.0118	284	96	379	85
RP43BH	Glendale Avenue	43rd Avenue	Maryvale	54	72	5295	0.0035	117	268	385	85
RP27BH	Glendale Avenue	27th Avenue	Maryvale	57	---	5221	0.0034	132	---	132	---
RP35BH	Glendale Avenue	35th Avenue	Maryvale	42	60	5147	0.0037	61	165	226	69
RP83GL	Orangewood Avenue	83rd Avenue	Glendale	72	---	2644	0.0036	255	---	255	---
RPOW83	Orangewood Avenue	75th Avenue	Glendale	48	---	5178	0.0021	66	---	66	---
RPOW75	Orangewood Avenue	71st Avenue	Glendale	42	---	3391	0.0019	44	---	44	---
RPOW71	Orangewood Avenue	67th Avenue	Glendale	66	---	2145	0.0029	181	---	181	---
RPNOLO	Northern Avenue	91st Avenue	Peoria	60	---	2827	0.0007	69	---	69	---
RPNO91	Northern Avenue	83rd Avenue	Peoria	72	---	6940	0.0030	233	---	233	---
RPNO83	Northern Avenue	75th Avenue	Peoria	60	---	5291	0.0038	161	---	161	---
RP27GL	Northern Avenue	27th Avenue	Maryvale	54	---	5260	0.0034	114	---	114	---
RP35GL	Northern Avenue	35th Avenue	Maryvale	48	30	5335	0.0037	87	26	113	53
RP43GL	Northern Avenue	43rd Avenue	Maryvale	54	54	5336	0.0035	117	124	241	71
RPNO59	Northern Avenue	51st Avenue	Glendale	66	---	5146	0.0025	168	---	168	---
RPNO67	Northern Avenue	59th Avenue	Glendale	72	---	2688	0.0010	134	---	134	---
RPOL91	Olive Avenue	83rd Avenue	Peoria	90	---	5184	0.0010	243	---	243	---
RPOL83	Olive Avenue	75th Avenue	Peoria	90	---	4974	0.0010	239	---	239	---
RPOL75	Olive Avenue	71st Avenue	Peoria	78	---	2971	0.0054	386	---	386	---
RPOL67	Olive Avenue	63rd Avenue	Glendale	90	---	2409	0.0033	442	---	442	---
RPOL71	Olive Avenue	67th Avenue	Glendale	72	---	2746	0.0243	662	---	662	---
RP35NO	Olive Avenue	35th Avenue	Maryvale	42	---	5191	0.0037	61	---	61	---

Kimley-Horn and Associates, Inc.

Project: ***Glendale Stormwater Management Plan***
Subject: **Storm Drain Route Parameters**
Model: **Maryvale**
Designed by: **ZRS** Date 11/4/2009 KHA Project No. 091910009
Checked by: **MAF** Date 12/14/2009 City of Glendale No. 089017

Objective: To determine the storm drain route parameters, namely diameter, slope and length

Existing Storm Drain Routing Reaches

Pipe Diversion ID	E/W Street Name	N/S Street Name	City	Mile Street Diameter	1/2 Mile Street Diameter	Length	Slope	Mile Street Storm Drain Capacity	1/2 Mile Street Storm Drain Capacity	Combined Storm Drain Capacity	Combined Storm Drain Diameter*
RP43NO	Olive Avenue	43rd Avenue	Maryvale	48	---	5100	0.0035	85	---	85	---
RPOL59	Olive Avenue	51st Avenue	Glendale	78	---	5117	0.0032	297	---	297	---
RPOL63	Olive Avenue	59th Avenue	Glendale	90	---	2835	0.0038	475	---	475	---
RPPELO	Peoria Avenue	91st Avenue	Peoria	72	---	1594	0.0012	147	---	147	---
RP75OL	Peoria Avenue	75th Avenue	Peoria	60	---	5035	0.0047	179	---	179	---
RP67MV	Peoria Avenue	67th Avenue	Glendale	60	---	2679	0.0039	162	---	162	---
RP59BR	Peoria Avenue	59th Avenue	Glendale	78	---	1231	0.0020	235	---	235	---
RPPE91	Peoria Avenue	83rd Avenue	Peoria	48	---	5350	0.0061	112	---	112	---
RPCTLO	Cactus Road	83rd Avenue	Peoria	120	---	6334	0.0016	663	---	663	---
RPCT83	Cactus Road	75th Avenue	Peoria	108	---	5246	0.0027	651	---	651	---
RPCT75	Cactus Road	67th Avenue	Peoria	78	---	5321	0.0026	268	---	268	---
RP59PE	Cactus Road	59th Avenue	Glendale	30	---	5358	0.0020	18	---	18	---
RPTBLO	Thunderbird Road	83rd Avenue	Peoria	72	---	1532	0.0034	247	---	247	---
RPTB83	Thunderbird Road	75th Avenue	Peoria	66	---	5194	0.0023	161	---	161	---
RP59OL	Brown Avenue	59th Avenue	Glendale	42	---	1446	0.0031	56	---	56	---
RPBR63	Brown Avenue	59th Avenue	Glendale	60	---	528	0.0038	161	---	161	---
RP63OL	Brown Avenue	63rd Avenue	Glendale	30	---	3878	0.0040	34	---	34	---
RPOW67	Grand Avenue	67th Avenue	Glendale	108	---	2517	0.0019	546	---	546	---
RPGR67	Grand Avenue	59th Avenue	Glendale	108	---	4247	0.0018	531	---	531	---
RP39IS	Grand Avenue	39th Avenue	Maryvale	72	---	2428	0.0035	251	---	251	---
RP35TM	Grand Avenue	31st Avenue	Maryvale	72	---	3051	0.0037	257	---	257	---
RP27MD	Grand Avenue	27th Avenue	Maryvale	66	---	5006	0.0034	195	---	195	---
RP67OL	Mountain View Road	67th Avenue	Glendale	66	---	2627	0.0027	175	---	175	---
RPML53	Mitchell Drive	53rd Avenue	Maryvale	72	---	1084	0.0010	136	---	136	---

*From Flowmaster Calculations

Future Storm Drain Routing Reaches

Pipe Diversion ID	E/W Street Name	N/S Street Name	City	Mile Street Diameter	1/2 Mile Street Diameter	Length	Slope	Mile Street Storm Drain Capacity	1/2 Mile Street Storm Drain Capacity	Combined Storm Drain Capacity	Combined Storm Drain Diameter*
RPCB67	Camelback Road	59th Avenue	Glendale	84	---	2642	0.0030	351	---	351	---
RPCB75	Camelback Road	67th Avenue	Glendale	102	---	4997	0.0022	504	---	504	---
RPBH83	Bethany Home Road	75th Avenue	Glendale	108	---	4286	0.0020	560	---	560	---

Kimley-Horn and Associates, Inc.

Project: ***Glendale Stormwater Management Plan***
Subject: **Routing Reach Parameters**
Model: **Maryvale**
Designed by: **BML** Date 11/18/2009 KHA Project No. 091910009
Checked by: **MAF** Date 12/7/2009 City of Glendale No. 089017

Objective: To determine the routing reach parameters that will be entered into the HEC-1 model, namely: length, slope, and the RX and RY values

Routing Flows within Defined Channels

Routing ID[1]	E/W Boundary Name[2]	N/S Boundary Name[2]	Length (ft)	Slope[3] (ft/ft)	Channel Section[4]	RX[5]								RY[5]							
						X1	X2	X3	X4	X5	X6	X7	X8	Y1	Y2	Y3	Y4	Y5	Y6	Y7	Y8
RWBH91	Bethany Home Road	91st Avenue	6508	0.0008	BHOC_B	0	4	18	66	126	162	172	176	13.14	12.14	12	0	0.6	9.15	9.25	10.25
RWBH99	Bethany Home Road	99th Avenue	1075	0.0011	BHOC_A	0	4	18	46.5	135.5	153.4	167.4	171.4	8.265	7.265	7.125	0	0.85	5.325	5.465	6.465
RWBHLO	Bethany Home Road	Loop 101	4110	0.0011	BHOC_A	0	4	18	46.5	135.5	153.4	167.4	171.4	8.265	7.265	7.125	0	0.85	5.325	5.465	6.465
RWBHNR	Bethany Home Road	New River	3231	0.0010	BHOC_A	0	4	18	46.5	135.5	153.4	167.4	171.4	8.265	7.265	7.125	0	0.85	5.325	5.465	6.465
RWBHRI	Bethany Home Road	Roosevelt Irrigation	2391	0.0010	BHOC_A	0	4	18	46.5	135.5	153.4	167.4	171.4	8.265	7.265	7.125	0	0.85	5.325	5.465	6.465
RWGC83	Grand Canal	83rd Avenue	6563	0.0010	BHOC_C	0	3	13	13	31	31	41	44	10	9	9	0	0	9	9	10
RSCTLO	Cactus Road	Loop 101	4816	0.0016	LO_K	0	3	13	29	39	55	65	68	9	8	8	0	0	8	8	9
RSPELO	Peoria Avenue	Loop 101	2704	0.0018	LO_I	0	3	13	25	35	47	57	60	7	6	6	0	0	6	6	7
RSOLLO	Olive Avenue	Loop 101	5324	0.0018	LO_H	0	3	13	33	63	83	93	96	11	10	10	0	0	10	10	11
RSNOLO	Northern Avenue	Loop 101	6136	0.0023	LO_F	0	4	16	26	34	44	56	59	6.24	5.24	5	0	0.2	5.2	5.44	6.44
RSGLLO	Glendale Avenue	Loop 101	2381	0.0023	LO_F	0	4	16	26	34	44	56	59	6.24	5.24	5	0	0.2	5.2	5.44	6.44
RSBHLO	Bethany Home Road	Loop 101	5165	0.0005	LO_E	0	4	16	34	57	74	86	89	10.24	9.24	9	0	0.2	8.7	8.97	9.94
RSISLO	Indian School Road	Loop 101	5583	0.0010	LO_C	0	4	14	29	49	64	94	97	11.2	10.2	10	0	0.4	10.4	11.84	12.84
RSTMLO	Thomas Road	Loop 101	5309	0.0010	LO_B	0	4	14	29	44	59	73	76	11.2	10.2	10	0	0.3	10.3	10.58	11.58
RSMDLO	McDowell Road	Loop 101	5729	0.0012	LO_A	0	3	5	39	47	51	65	68	18	17	17	0	0.16	17.16	17.44	18.44
RSINLO	Interstate 10	Loop 101	1374	0.0019	LO_A	0	3	5	39	47	51	65	68	18	17	17	0	0.16	17.16	17.44	18.44
RWIN51	Interstate 10	51st Avenue	5290	0.0027	IN_10	0	0.1	18	36	66	84	102	102.1	18	17.05	9	0	0	9	17.05	18
RWIN59	Interstate 10	59th Avenue	5297	0.0017	IN_10	0	0.1	18	36	66	84	102	102.1	18	17.05	9	0	0	9	17.05	18
RWIN67	Interstate 10	67th Avenue	5145	0.0012	IN_10	0	0.1	18	36	66	84	102	102.1	18	17.05	9	0	0	9	17.05	18
RWIN75	Interstate 10	75th Avenue	5237	0.0020	IN_10	0	0.1	18	36	66	84	102	102.1	18	17.05	9	0	0	9	17.05	18
RWIN83	Interstate 10	83rd Avenue	5396	0.0016	IN_10	0	0.1	18	36	66	84	102	102.1	18	17.05	9	0	0	9	17.05	18
RWIN91	Interstate 10	91st Avenue	5217	0.0016	IN_10	0	0.1	18	36	66	84	102	102.1	18	17.05	9	0	0	9	17.05	18
RWINLO	Interstate 10	Loop 101	4153	0.0008	IN_10	0	0.1	18	36	66	84	102	102.1	18	17.05	9	0	0	9	17.05	18
RWIN07	Interstate 10	107th Avenue	6475	0.0017	IN_10	0	0.1	18	36	66	84	102	102.1	18	17.05	9	0	0	9	17.05	18
RWINAV	Interstate 10	Avondale Boulevard	5174	0.0019	IN_10	0	0.1	18	36	66	84	102	102.1	18	17.05	9	0	0	9	17.05	18
RWINAF	Interstate 10	Agua Fria River	7360	0.0009	IN_10	0	0.1	18	36	66	84	102	102.1	18	17.05	9	0	0	9	17.05	18

Notes:
1. The Routing ID corresponds to the KK card in HEC-1.
2. Names correspond to streets or watercourses downstream of Routing ID.
3. Slopes were obtained from As-builts or the current Maryvale ADMS, date.
4. Channel sections are based on As-built record data. See Typical Channels sheet for sources.
5. The RX and RY represent the 8-point cross section used in the Normal Depth routing method from HEC-1.

Kimley-Horn and Associates, Inc.

Project: ***Glendale Stormwater Management Plan***
Subject: **Routing Reach Parameters - North/South Streets**
Model: **Maryvale**
Designed by: **MAF** Date 11/6/2009
Checked by: **AOM** Date 12/7/2009

KHA Project No. 091910009
City of Glendale No. 089017

Objective: To determine the routing reach parameters that will be entered into the HEC-1 model, namely: length, slope, and the RX and RY values

Routing Flows in the South Direction

Routing ID[1]	E/W Boundary Name[2]	N/S Boundary Name[2]	Length (ft)	USGE[3] (ft)	DSGE[3] (ft)	Slope (ft/ft)	City	Number or Type of Streets[4]			Width (ft)				RX								RY							
								Arterial[5]	Collector[6]	Local	Channel[7]	LOB[8]	ROB[8]	Total[9]	X1	X2	X3	X4	X5	X6	X7	X8	Y1	Y2	Y3	Y4	Y5	Y6	Y7	Y8
RSTB83	Thunderbird Road	83rd Avenue	5280	1180.00	1168.10	0.0023	Peoria	1	1	2	203	48	48	299	0	0	48	48	251	251	299	299	3	1.0	0.5	0	0	0.5	1.0	3
RSCT67	Cactus Road	67th Avenue	5280	1200.33	1182.00	0.0035	Glendale	A-4	0	1	131	24.5	24.5	180	0	0	24.5	24.5	155.5	155.5	180	180	3	0.7	0.5	0	0	0.5	0.7	3
RSCT75	Cactus Road	75th Avenue	5280	1185.94	1166.00	0.0038	Peoria	1	1	3	234	57.5	57.5	349	0	0	57.5	57.5	291.5	291.5	349	349	3	1.1	0.5	0	0	0.5	1.1	3
RSCT83	Cactus Road	83rd Avenue	5280	1168.10	1152.09	0.0030	Peoria	1	1	2	203	48	48	299	0	0	48	48	251	251	299	299	3	1.0	0.5	0	0	0.5	1.0	3
RSPE59	Peoria Avenue	59th Avenue	5280	1203.43	1183.96	0.0037	Glendale	A-4	1	4	281	58.5	58.5	398	0	0	58.5	58.5	339.5	339.5	398	398	3	1.1	0.5	0	0	0.5	1.1	3
RSPE67	Peoria Avenue	67th Avenue	5280	1182.00	1170.30	0.0022	Glendale	A-4	1	4	281	58.5	58.5	398	0	0	58.5	58.5	339.5	339.5	398	398	3	1.1	0.5	0	0	0.5	1.1	3
RSPE75	Peoria Avenue	75th Avenue	5280	1166.00	1152.00	0.0027	Peoria	1	1	3	234	57.5	57.5	349	0	0	57.5	57.5	291.5	291.5	349	349	3	1.1	0.5	0	0	0.5	1.1	3
RSPE83	Peoria Avenue	83rd Avenue	5280	1152.09	1140.00	0.0023	Peoria	1	1	5	296	76.5	76.5	449	0	0	76.5	76.5	372.5	372.5	449	449	3	1.3	0.5	0	0	0.5	1.3	3
RSOL51	Olive Avenue	51st Avenue	5280	1206.11	1190.00	0.0031	Glendale	A-2	1	5	291	68.5	68.5	428	0	0	68.5	68.5	359.5	359.5	428	428	3	1.2	0.5	0	0	0.5	1.2	3
RSOL59	Olive Avenue	59th Avenue	5280	1183.96	1172.00	0.0023	Glendale	A-4	1	6	353	72.5	72.5	498	0	0	72.5	72.5	425.5	425.5	498	498	3	1.2	0.5	0	0	0.5	1.2	3
RSOL67	Olive Avenue	67th Avenue	5280	1170.30	1154.00	0.0031	Glendale	A-4	0	4	239	45.5	45.5	330	0	0	45.5	45.5	284.5	284.5	330	330	3	1.0	0.5	0	0	0.5	1.0	3
RSOL75	Olive Avenue	75th Avenue	5280	1152.00	1137.76	0.0027	Peoria	1	1	3	234	57.5	57.5	349	0	0	57.5	57.5	291.5	291.5	349	349	3	1.1	0.5	0	0	0.5	1.1	3
RSOL83	Olive Avenue	83rd Avenue	5280	1140.00	1123.53	0.0031	Peoria	1	1	4	265	67	67	399	0	0	67	67	332	332	399	399	3	1.2	0.5	0	0	0.5	1.2	3
RSOL91	Olive Avenue	91st Avenue	5280	1120.25	1110.07	0.0019	Peoria	1	1	6	327	86	86	499	0	0	86	86	413	413	499	499	3	1.4	0.5	0	0	0.5	1.4	3
RSNO35	Northern Avenue	35th Avenue	5280	1220.11	1201.00	0.0036	Phoenix	1	1	4	265	67	67	399	0	0	67	67	332	332	399	399	3	1.2	0.5	0	0	0.5	1.2	3
RSNO43	Northern Avenue	43rd Avenue	5280	1208.48	1190.06	0.0035	Phoenix	1	1	4	265	67	67	399	0	0	67	67	332	332	399	399	3	1.2	0.5	0	0	0.5	1.2	3
RSNO51	Northern Avenue	51st Avenue	5280	1190.00	1180.13	0.0019	Glendale	A-2	1	3	219	54.5	54.5	328	0	0	54.5	54.5	273.5	273.5	328	328	3	1.0	0.5	0	0	0.5	1.0	3
RSNO59	Northern Avenue	59th Avenue	5280	1172.00	1159.10	0.0024	Glendale	A-4	1	8	425	86.5	86.5	598	0	0	86.5	86.5	511.5	511.5	598	598	3	1.4	0.5	0	0	0.5	1.4	3
RSNO67	Northern Avenue	67th Avenue	5280	1154.00	1143.81	0.0019	Glendale	A-4	1	4	281	58.5	58.5	398	0	0	58.5	58.5	339.5	339.5	398	398	3	1.1	0.5	0	0	0.5	1.1	3
RSNO75	Northern Avenue	75th Avenue	5280	1137.76	1127.79	0.0019	Peoria	1	1	0	141	29	29	199	0	0	29	29	170	170	199	199	3	0.8	0.5	0	0	0.5	0.8	3
RSNO83	Northern Avenue	83rd Avenue	5280	1123.53	1102.19	0.0040	Peoria	1	0	2	153	35.5	35.5	224	0	0	35.5	35.5	188.5	188.5	224	224	3	0.9	0.5	0	0	0.5	0.9	3
RSNO91	Northern Avenue	91st Avenue	5280	1110.07	1095.01	0.0029	Peoria	1	1	2	203	48	48	299	0	0	48	48	251	251	299	299	3	1.0	0.5	0	0	0.5	1.0	3
RSOW67	Orangewood Avenue	67th Avenue	2640	1143.81	1134.45	0.0035	Glendale	A-4	0	0	95	17.5	17.5	130	0	0	17.5	17.5	112.5	112.5	130	130	3	0.7	0.5	0	0	0.5	0.7	3
RSOW75	Orangewood Avenue	75th Avenue	2640	1127.79	1121.16	0.0025	Glendale	A-3	1	2	193	47.5	47.5	288	0	0	47.5	47.5	240.5	240.5	288	288	3	1.0	0.5	0	0	0.5	1.0	3
RSGL27	Glendale Avenue	27th Avenue	5280	1201.00	1179.93	0.0040	Phoenix	1	0	1	122	26	26	174	0	0	26	26	148	148	174	174	3	0.8	0.5	0	0	0.5	0.8	3
RSGL35	Glendale Avenue	35th Avenue	5280	1201.00	1184.00	0.0032	Phoenix	1	1	5	296	76.5	76.5	449	0	0	76.5	76.5	372.5	372.5	449	449	3	1.3	0.5	0	0	0.5	1.3	3
RSGL43	Glendale Avenue	43rd Avenue	5280	1190.06	1172.00	0.0034	Phoenix	1	1	3	234	57.5	57.5	349	0	0	57.5	57.5	291.5	291.5	349	349	3	1.1	0.5	0	0	0.5	1.1	3
RSGL51	Glendale Avenue	51st Avenue	5280	1180.13	1166.00	0.0027	Glendale	A-2	1	4	255	61.5	61.5	378	0	0	61.5	61.5	316.5	316.5	378	378	3	1.1	0.5	0	0	0.5	1.1	3
RSGL59	Glendale Avenue	59th Avenue	5280	1159.10	1149.56	0.0018	Glendale	A-4	1	1	173	37.5	37.5	248	0	0	37.5	37.5	210.5	210.5	248	248	3	0.9	0.5	0	0	0.5	0.9	3
RSGL67	Glendale Avenue	67th Avenue	2640	1143.81	1129.99	0.0052	Glendale	A-2	0	1	105	27.5	27.5	160	0	0	27.5	27.5	132.5	132.5	160	160	3	0.8	0.5	0	0	0.5	0.8	3
RSGL75	Glendale Avenue	75th Avenue	2640	1121.16	1112.00	0.0035	Glendale	A-3	1	3	229	54.5	54.5	338	0	0	54.5	54.5	283.5	283.5	338	338	3	1.0	0.5	0	0	0.5	1.0	3
RSGL83	Glendale Avenue	83rd Avenue	2640	1106.00	1095.10	0.0041	Glendale	A-4	0	3	203	38.5	38.5	280	0	0	38.5	38.5	241.5	241.5	280	280	3	0.9	0.5	0	0	0.5	0.9	3
RSGL91	Glendale Avenue	91st Avenue	5280	1095.01	1078.00	0.0032	Glendale	A-4	0	3	203	38.5	38.5	280	0	0	38.5	38.5	241.5	241.5	280	280	3	0.9	0.5	0	0	0.5	0.9	3
RSBH27	Bethany Home Road	27th Avenue	5280	1179.93	1159.29	0.0039	Phoenix	1	0	1	122	26	26	174	0	0	26	26	148	148	174	174	3	0.8	0.5	0	0	0.5	0.8	3
RSBH35	Bethany Home Road	35th Avenue	5280	1184.00	1158.00	0.0049	Phoenix	1	1	4	265	67	67	399	0	0	67	67	332	332	399	399	3	1.2	0.5	0	0	0.5	1.2	3
RSBH43	Bethany Home Road	43rd Avenue	5280	1172.00	1157.30	0.0028	Phoenix	1	1	3	234	57.5	57.5	349	0	0	57.5	57.5	291.5	291.5	349	349	3	1.1	0.5	0	0	0.5	1.1	3
RSBH51	Bethany Home Road	51st Avenue	5280	1166.00	1150.00	0.0030	Glendale	A-2	1	4	255	61.5	61.5	378	0	0	61.5	61.5	316.5	316.5	378	378	3	1.1	0.5	0	0	0.5	1.1	3
RSBH59	Bethany Home Road	59th Avenue	5280	1149.56	1137.00	0.0024	Glendale	A-4	1	0	137	30.5	30.5	198	0	0	30.5	30.5	167.5	167.5	198	198	3	0.8	0.5	0	0	0.5	0.8	3
RSBH67	Bethany Home Road	67th Avenue	5280	1129.99	1122.00	0.0015	Glendale	A-2	1	6	327	75.5	75.5	478	0	0	75.5	75.5	402.5	402.5	478	478	3	1.3	0.5	0	0	0.5	1.3	3
RSBH75	Bethany Home Road	75th Avenue	5280	1112.00	1102.19	0.0019	Glendale	A-1	1	5	291	68.5	68.5	428	0	0	68.5	68.5	359.5	359.5	428	428	3	1.2	0.5	0	0	0.5	1.2	3
RSBH83	Bethany Home Road	83rd Avenue	5280	1095.10	1084.20	0.0021	Glendale	A-4	1	6	353	72.5	72.5	498	0	0	72.5	72.5	425.5	425.5	498	498	3	1.2	0.5	0	0	0.5	1.2	3
RSBH91	Bethany Home Road	91st Avenue	5280	1078.00	1068.00	0.0019	Glendale	A-4	1	1	173	37.5	37.5	248	0	0	37.5	37.5	210.5	210.5	248	248	3	0.9	0.5	0	0	0.5	0.9	3
RSBHRI	Bethany Home Road	Roosevelt Irrigation	5280	1066.62	1058.90	0.0015	Glendale	0	0	1	36	7	7	50	0	0	7	7	43	43	50	50	3	0.6	0.5	0	0	0.5	0.6	3
RSCB27	Camelback Road	27th Avenue	5280	1159.29	1140.00	0.0037	Phoenix	1	0	1	122	26	26	174	0	0	26	26	148	148	174	174	3	0.8	0.5	0	0	0.5	0.8	3
RSCB35	Camelback Road	35th Avenue	5280	1158.00	1136.85	0.0040	Phoenix	1	1	7	358	95.5	95.5	549	0	0	95.5	95.5	453.5	453.5	549	549	3	1.5	0.5	0	0	0.5	1.5	3
RSCB43	Camelback Road	43rd Avenue	5280	1157.30	1140.19	0.0032	Phoenix	1	1	3	234	57.5	57.5	349	0	0	57.5	57.5	291.5	291.5	349	349	3	1.1	0.5	0	0	0.5	1.1	3
RSCB59	Camelback Road	59th Avenue	5280	1137.00	1121.00	0.0030	Phoenix	1	1	2	203	48	48	299	0	0	48	48	251	251	299	299	3	1.0	0.5	0	0	0.5	1.0	3
RSCB67	Camelback Road	67th Avenue	5280	1122.00	1108.00	0.0027	Phoenix	1	1	3	234	57.5	57.5	349	0	0	57.5	57.5	291.5	291.5	349	349	3	1.1	0.5	0	0	0.5	1.1	3
RSCB75	Camelback Road	75th Avenue	5280	1102.19	1095.19	0.0013	Phoenix	1	1	6	327	86	86	499	0	0	86	86	413	413	499	499	3	1.4	0.5	0	0	0.5	1.4	3
RSIS27	Indian School Road	27th Avenue	5280	1140.00	1119.96	0.0038	Phoenix	1	0	1	122	26	26	174	0	0	26	26	148	148	174	174	3	0.8	0.5	0	0	0.5	0.8	3
RSIS35	Indian School Road	35th Avenue	5280	1136.85	1117.00	0.0038	Phoenix	1	1	6	327	86	86	499	0	0	86	86	413	413	499	499	3	1.4	0.5	0	0	0.5	1.4	3
RSIS43	Indian School Road	43rd Avenue	5280	1140.19	1115.04	0.0048	Phoenix	1	0	0	91	16.5	16.5	124	0	0	16.5	16.5	107.5	107.5	124	124	3	0.7	0.5	0	0	0.5	0.7	3
RSIS51	Indian School Road	51st Avenue	5280	1133.00	1113.68	0.0037	Phoenix	1	1	1	172	38.5	38.5	249	0	0	38.5	38.5	210.5	210.5	249	249	3	0.9	0.5	0	0	0.5	0.9	3
RSIS59	Indian School Road	59th Avenue	5280	1121.00	1105.00	0.0030	Phoenix	1	1	4	265	67	67	399	0	0	67	67	332	332	399	399	3	1.2	0.5	0	0	0.5	1.2	3
RSISGC	Indian School Road	Grand Canal	1231	1098.75	1096.00	0.0022	Phoenix	0	1	2	112	31.5	31.5	175	0	0	31.5	31.5	143.5	143.5	175	175	3	0.8	0.5	0	0	0.5	0.8	3
RSIS83	Indian School Road	83rd Avenue	5280	1074.88	1063.14	0.0022	Phoenix	1	1	3	234	57.5	57.5	349	0	0	57.5	57.5	291.5	291.5	349	349	3	1.1	0.5	0	0	0.5	1.1	3
RSIS91	Indian School Road	91st Avenue	5280	1056.00	1047.23	0.0017	Phoenix	1	1	3	234	57.5	57.5	349	0	0	57.5	57.5	291.5	291.5	349	349	3	1.1	0.5	0	0	0.5	1.1	3
RSIS99	Indian School Road	99th Avenue	5280	1042.00	1031.64	0.0020	Phoenix	1	0	0	91	16.5	16.5	124	0	0	16.5	16.5	107.5	107.5	124	124	3	0.7	0.5	0	0	0.5	0.7	3

Kimley-Horn and Associates, Inc.

Project: ***Glendale Stormwater Management Plan***
Subject: **Routing Reach Parameters - North/South Streets**
Model: **Maryvale**
Designed by: **MAF** Date 11/6/2009
Checked by: **AOM** Date 12/7/2009

KHA Project No. 091910009
City of Glendale No. 089017

Objective: To determine the routing reach parameters that will be entered into the HEC-1 model, namely: length, slope, and the RX and RY values

Routing Flows in the South Direction

Routing ID[1]	E/W Boundary Name[2]	N/S Boundary Name[2]	Length (ft)	USGE[3] (ft)	DSGE[3] (ft)	Slope (ft/ft)	City	Number or Type of Streets[4]			Width (ft)				RX								RY							
								Arterial[5]	Collector[6]	Local	Channel[7]	LOB[8]	ROB[8]	Total[9]	X1	X2	X3	X4	X5	X6	X7	X8	Y1	Y2	Y3	Y4	Y5	Y6	Y7	Y8
RSIS07	Indian School Road	107th Avenue	5280	1034.00	1020.14	0.0026	Phoenix	1	0	1	122	26	26	174	0	0	26	26	148	148	174	174	3	0.8	0.5	0	0	0.5	0.8	3
RSGR27	Grand Avenue	27th Avenue	4632	1108.00	1099.00	0.0019	Phoenix	2	0	0	182	33	33	248	0	0	33	33	215	215	248	248	3	0.8	0.5	0	0	0.5	0.8	3
RSGR35	Grand Avenue	35th Avenue	7095	1140.19	1117.00	0.0033	Phoenix	1	1	2	203	48	48	299	0	0	48	48	251	251	299	299	3	1.0	0.5	0	0	0.5	1.0	3
RSGR43	Grand Avenue	43rd Avenue	7370	1150.00	1140.19	0.0013	Phoenix	0	1	2	112	31.5	31.5	175	0	0	31.5	31.5	143.5	143.5	175	175	3	0.8	0.5	0	0	0.5	0.8	3
RSGR83	Grand Avenue	83rd Avenue	7145	1140.00	1137.76	0.0003	Peoria	1	1	4	265	67	67	399	0	0	67	67	332	332	399	399	3	1.2	0.5	0	0	0.5	1.2	3
RSGR91	Grand Avenue	91st Avenue	4969	1152.09	1140.00	0.0024	Peoria	1	1	3	234	57.5	57.5	349	0	0	57.5	57.5	291.5	291.5	349	349	3	1.1	0.5	0	0	0.5	1.1	3
RSGCGR	Grand Canal	Grand Avenue	3104	1117.00	1108.00	0.0029	Phoenix	1	1	2	203	48	48	299	0	0	48	48	251	251	299	299	3	1.0	0.5	0	0	0.5	1.0	3
RSGC27	Grand Canal	27th Avenue	1755	1119.96	1115.00	0.0028	Phoenix	1	0	0	91	16.5	16.5	124	0	0	16.5	16.5	107.5	107.5	124	124	3	0.7	0.5	0	0	0.5	0.7	3
RSGC35	Grand Canal	35th Avenue	1973	1117.00	1110.48	0.0033	Phoenix	1	0	0	91	16.5	16.5	124	0	0	16.5	16.5	107.5	107.5	124	124	3	0.7	0.5	0	0	0.5	0.7	3
RSGC43	Grand Canal	43rd Avenue	2155	1115.04	1106.94	0.0038	Phoenix	1	1	3	234	57.5	57.5	349	0	0	57.5	57.5	291.5	291.5	349	349	3	1.1	0.5	0	0	0.5	1.1	3
RSGC51	Grand Canal	51st Avenue	2155	1113.68	1103.91	0.0045	Phoenix	1	1	4	265	67	67	399	0	0	67	67	332	332	399	399	3	1.2	0.5	0	0	0.5	1.2	3
RSGC59	Grand Canal	59th Avenue	2502	1105.00	1098.75	0.0025	Phoenix	1	1	3	234	57.5	57.5	349	0	0	57.5	57.5	291.5	291.5	349	349	3	1.1	0.5	0	0	0.5	1.1	3
RSGC67	Grand Canal	67th Avenue	5280	1108.00	1099.00	0.0017	Phoenix	1	1	5	296	76.5	76.5	449	0	0	76.5	76.5	372.5	372.5	449	449	3	1.3	0.5	0	0	0.5	1.3	3
RSTM35	Thomas Road	35th Avenue	3050	1110.48	1094.93	0.0051	Phoenix	1	0	0	91	16.5	16.5	124	0	0	16.5	16.5	107.5	107.5	124	124	3	0.7	0.5	0	0	0.5	0.7	3
RSTM43	Thomas Road	43rd Avenue	3050	1106.94	1093.30	0.0045	Phoenix	1	0	0	91	16.5	16.5	124	0	0	16.5	16.5	107.5	107.5	124	124	3	0.7	0.5	0	0	0.5	0.7	3
RSTM51	Thomas Road	51st Avenue	2916	1103.91	1090.97	0.0044	Phoenix	1	1	0	141	29	29	199	0	0	29	29	170	170	199	199	3	0.8	0.5	0	0	0.5	0.8	3
RSTM59	Thomas Road	59th Avenue	2752	1098.75	1084.00	0.0054	Phoenix	1	1	0	141	29	29	199	0	0	29	29	170	170	199	199	3	0.8	0.5	0	0	0.5	0.8	3
RSTM67	Thomas Road	67th Avenue	5280	1091.51	1076.00	0.0029	Phoenix	0	0	1	31	9.5	9.5	50	0	0	9.5	9.5	40.5	40.5	50	50	3	0.6	0.5	0	0	0.5	0.6	3
RSTM75	Thomas Road	75th Avenue	5280	1078.00	1064.00	0.0027	Phoenix	1	1	1	172	38.5	38.5	249	0	0	38.5	38.5	210.5	210.5	249	249	3	0.9	0.5	0	0	0.5	0.9	3
RSTM83	Thomas Road	83rd Avenue	5280	1063.14	1050.82	0.0023	Phoenix	1	1	5	296	76.5	76.5	449	0	0	76.5	76.5	372.5	372.5	449	449	3	1.3	0.5	0	0	0.5	1.3	3
RSTM91	Thomas Road	91st Avenue	5280	1047.23	1036.00	0.0021	Phoenix	1	1	4	265	67	67	399	0	0	67	67	332	332	399	399	3	1.2	0.5	0	0	0.5	1.2	3
RSTM99	Thomas Road	99th Avenue	5280	1031.64	1026.87	0.0009	Phoenix	1	0	0	91	16.5	16.5	124	0	0	16.5	16.5	107.5	107.5	124	124	3	0.7	0.5	0	0	0.5	0.7	3
RSTM07	Thomas Road	107th Avenue	2640	1019.06	1014.00	0.0019	Phoenix	1	0	0	91	16.5	16.5	124	0	0	16.5	16.5	107.5	107.5	124	124	3	0.7	0.5	0	0	0.5	0.7	3
RSRI07	Roosevelt Irrigation	107th Avenue	2640	1020.14	1018.00	0.0008	Phoenix	1	0	1	122	26	26	174	0	0	26	26	148	148	174	174	3	0.8	0.5	0	0	0.5	0.8	3
RSMD27	McDowell Road	27th Avenue	5280	1099.00	1080.94	0.0034	Phoenix	1	0	0	91	16.5	16.5	124	0	0	16.5	16.5	107.5	107.5	124	124	3	0.7	0.5	0	0	0.5	0.7	3
RSMD35	McDowell Road	35th Avenue	5280	1094.93	1076.10	0.0036	Phoenix	1	1	4	265	67	67	399	0	0	67	67	332	332	399	399	3	1.2	0.5	0	0	0.5	1.2	3
RSMD43	McDowell Road	43rd Avenue	5280	1093.30	1073.77	0.0037	Phoenix	1	1	4	265	67	67	399	0	0	67	67	332	332	399	399	3	1.2	0.5	0	0	0.5	1.2	3
RSMD51	McDowell Road	51st Avenue	5280	1090.97	1072.75	0.0035	Phoenix	1	0	4	215	54.5	54.5	324	0	0	54.5	54.5	269.5	269.5	324	324	3	1.0	0.5	0	0	0.5	1.0	3
RSMD59	McDowell Road	59th Avenue	5280	1084.00	1065.44	0.0035	Phoenix	1	1	1	172	38.5	38.5	249	0	0	38.5	38.5	210.5	210.5	249	249	3	0.9	0.5	0	0	0.5	0.9	3
RSMD67	McDowell Road	67th Avenue	5280	1076.00	1057.58	0.0035	Phoenix	1	1	2	203	48	48	299	0	0	48	48	251	251	299	299	3	1.0	0.5	0	0	0.5	1.0	3
RSMD75	McDowell Road	75th Avenue	5280	1064.00	1049.64	0.0027	Phoenix	1	1	4	265	67	67	399	0	0	67	67	332	332	399	399	3	1.2	0.5	0	0	0.5	1.2	3
RSMD83	McDowell Road	83rd Avenue	5280	1050.82	1036.02	0.0028	Phoenix	1	1	0	141	29	29	199	0	0	29	29	170	170	199	199	3	0.8	0.5	0	0	0.5	0.8	3
RSMD91	McDowell Road	91st Avenue	5280	1036.00	1024.99	0.0021	Phoenix	1	1	3	234	57.5	57.5	349	0	0	57.5	57.5	291.5	291.5	349	349	3	1.1	0.5	0	0	0.5	1.1	3
RSMD99	McDowell Road	99th Avenue	5508	1026.87	1021.63	0.0010	Phoenix	1	0	0	91	16.5	16.5	124	0	0	16.5	16.5	107.5	107.5	124	124	3	0.7	0.5	0	0	0.5	0.7	3
RSMD07	McDowell Road	107th Avenue	5280	1014.00	1010.90	0.0006	Phoenix	1	0	1	122	26	26	174	0	0	26	26	148	148	174	174	3	0.8	0.5	0	0	0.5	0.8	3
RSMDAV	McDowell Road	Avondale Boulevard	5280	1008.00	998.84	0.0017	Phoenix	1	1	1	172	38.5	38.5	249	0	0	38.5	38.5	210.5	210.5	249	249	3	0.9	0.5	0	0	0.5	0.9	3
RSIN35	Interstate 10	35th Avenue	1116	1076.10	1074.00	0.0019	Phoenix	1	1	5	296	76.5	76.5	449	0	0	76.5	76.5	372.5	372.5	449	449	3	1.3	0.5	0	0	0.5	1.3	3
RSIN43	Interstate 10	43rd Avenue	900	1073.77	1070.00	0.0042	Phoenix	1	1	3	234	57.5	57.5	349	0	0	57.5	57.5	291.5	291.5	349	349	3	1.1	0.5	0	0	0.5	1.1	3
RSIN51	Interstate 10	51st Avenue	1143	1072.75	1072.00	0.0007	Phoenix	1	0	4	215	54.5	54.5	324	0	0	54.5	54.5	269.5	269.5	324	324	3	1.0	0.5	0	0	0.5	1.0	3
RSIN59	Interstate 10	59th Avenue	730	1065.44	1062.00	0.0047	Phoenix	1	0	2	153	35.5	35.5	224	0	0	35.5	35.5	188.5	188.5	224	224	3	0.9	0.5	0	0	0.5	0.9	3
RSIN67	Interstate 10	67th Avenue	741	1060.00	1058.00	0.0027	Phoenix	0	1	0	50	12.5	12.5	75	0	0	12.5	12.5	62.5	62.5	75	75	3	0.6	0.5	0	0	0.5	0.6	3
RSIN75	Interstate 10	75th Avenue	731	1049.64	1048.00	0.0022	Phoenix	1	1	0	141	29	29	199	0	0	29	29	170	170	199	199	3	0.8	0.5	0	0	0.5	0.8	3
RSIN91	Interstate 10	91st Avenue	535	1024.99	1024.00	0.0019	Phoenix	0	0	1	31	9.5	9.5	50	0	0	9.5	9.5	40.5	40.5	50	50	3	0.6	0.5	0	0	0.5	0.6	3
RSIN99	Interstate 10	99th Avenue	6080	1021.63	1010.00	0.0019	Phoenix	1	0	0	91	16.5	16.5	124	0	0	16.5	16.5	107.5	107.5	124	124	3	0.7	0.5	0	0	0.5	0.7	3
RSIN07	Interstate 10	107th Avenue	844	1010.90	1010.20	0.0008	Phoenix	1	0	0	91	16.5	16.5	124	0	0	16.5	16.5	107.5	107.5	124	124	3	0.7	0.5	0	0	0.5	0.7	3
RSINAV	Interstate 10	Avondale Boulevard	1317	998.84	996.00	0.0022	Phoenix	1	0	0	91	16.5	16.5	124	0	0	16.5	16.5	107.5	107.5	124	124	3	0.7	0.5	0	0	0.5	0.7	3
RSINAF	Interstate 10	Agua Fria River	1317	998.84	996.00	0.0022	Phoenix	0	1	1	81	22	22	125	0	0	22	22	103	103	125	125	3	0.7	0.5	0	0	0.5	0.7	3

Notes:
1. The Routing ID corresponds to the KK card in HEC-1.
2. Streets correspond to streets downstream of Routing ID.
3. Elevations taken from 2-ft contour data obtained from the Flood Control District of Maricopa County, taken in 1994 for the Maryvale ADMS.
4. For this study Arterial streets represent the mile streets, Collector streets represent the half-mile streets, and Local Streets are all other streets.
5. Streets within the City of Glendale are based on Glendale typical sections. Streets outside of Glendale are based on average street sections from the Cities of Peoria and Phoenix. Glendale arterial street typical section was selected based on City of Glendale Detail G-300.
6. The City of Glendale has several typical details for a collector street that are very similar. An average City of Glendale section was used for collector streets within Glendale. Collector streets outside of Glendal are based on average street sections from the Cities of Peoria and Phoenix.
7. The width of the channel is based on a composite street width from the typical details.
8. The left overbank and right overbank are based on composite street widths. The overbanks were calculated by subtracting the channel width from the right-of-way.
9. The total width is the composite right-of-way width for the street sections based on the typical details.
10. The RX and RY represent the 8-point cross section used in the Normal Depth routing method from HEC-1.
Curb heights were assumed to be 0.5 ft and a slope of 1% was used from the curb to the limits of the right-of-way.

Kimley-Horn and Associates, Inc.

Project: ***Glendale Stormwater Management Plan***
Subject: **Routing Reach Parameters - East/West Streets**
Model: **Maryvale**
Designed by: **MAF** Date 11/6/2009
Checked by: **AOM** Date 12/7/2009

KHA Project No. 091910009
City of Glendale No. 089017

Objective: To determine the routing reach parameters that will be entered into the HEC-1 model, namely: length, slope, and the RX and RY values

Routing Flows in the West Direction

Routing ID[1]	E/W Boundary Name[2]	N/S Boundary Name[2]	Length (ft)	USGE[3] (ft)	DSGE[3] (ft)	Slope (ft/ft)	City	Number or Type of Streets[4]			Width (ft)				RX								RY							
								Arterial[5]	Collector[6]	Local	Channel[7]	LOB[8]	ROB[8]	Total[9]	X1	X2	X3	X4	X5	X6	X7	X8	Y1	Y2	Y3	Y4	Y5	Y6	Y7	Y8
RWTB75	Thunderbird Road	75th Avenue	5280	1200.33	1185.94	0.0027	Peoria	1	1	2	203	48	48	299	0	0	48	48	251	251	299	299	3	1.0	0.5	0	0	0.5	1.0	3
RWTB83	Thunderbird Road	83rd Avenue	5280	1185.94	1168.10	0.0034	Peoria	1	1	5	296	76.5	76.5	449	0	0	76.5	76.5	372.5	372.5	449	449	3	1.3	0.5	0	0	0.5	1.3	3
RWTBLO	Thunderbird Road	Loop 101	2002	1168.10	1162.00	0.0030	Peoria	1	0	0	91	16.5	16.5	124	0	0	16.5	16.5	107.5	107.5	124	124	3	0.7	0.5	0	0	0.5	0.7	3
RWCT67	Cactus Road	67th Avenue	5280	1203.43	1182.00	0.0041	Glendale	A-2	1	0	111	33.5	33.5	178	0	0	33.5	33.5	144.5	144.5	178	178	3	0.8	0.5	0	0	0.5	0.8	3
RWCT75	Cactus Road	75th Avenue	5280	1182.00	1166.00	0.0030	Peoria	1	1	5	296	76.5	76.5	449	0	0	76.5	76.5	372.5	372.5	449	449	3	1.3	0.5	0	0	0.5	1.3	3
RWCT83	Cactus Road	83rd Avenue	5280	1166.00	1152.09	0.0026	Peoria	1	1	3	234	57.5	57.5	349	0	0	57.5	57.5	291.5	291.5	349	349	3	1.1	0.5	0	0	0.5	1.1	3
RWCTLO	Cactus Road	Loop 101	6650	1152.09	1120.00	0.0048	Peoria	1	1	5	296	76.5	76.5	449	0	0	76.5	76.5	372.5	372.5	449	449	3	1.3	0.5	0	0	0.5	1.3	3
RWPE59	Peoria Avenue	59th Avenue	5280	1206.11	1183.96	0.0042	Glendale	A-4	1	7	389	79.5	79.5	548	0	0	79.5	79.5	468.5	468.5	548	548	3	1.3	0.5	0	0	0.5	1.3	3
RWPE67	Peoria Avenue	67th Avenue	5280	1183.96	1170.30	0.0026	Glendale	A-4	1	3	245	51.5	51.5	348	0	0	51.5	51.5	296.5	296.5	348	348	3	1.0	0.5	0	0	0.5	1.0	3
RWPE75	Peoria Avenue	75th Avenue	5280	1170.30	1152.00	0.0035	Peoria	1	1	6	327	86	86	499	0	0	86	86	413	413	499	499	3	1.4	0.5	0	0	0.5	1.4	3
RWPE83	Peoria Avenue	83rd Avenue	5280	1152.00	1140.00	0.0023	Peoria	1	1	3	234	57.5	57.5	349	0	0	57.5	57.5	291.5	291.5	349	349	3	1.1	0.5	0	0	0.5	1.1	3
RWPE91	Peoria Avenue	91st Avenue	5280	1140.00	1120.25	0.0037	Peoria	1	1	4	265	67	67	399	0	0	67	67	332	332	399	399	3	1.2	0.5	0	0	0.5	1.2	3
RWPELO	Peoria Avenue	Loop 101	1289	1120.25	1118.00	0.0017	Peoria	1	0	6	277	73.5	73.5	424	0	0	73.5	73.5	350.5	350.5	424	424	3	1.2	0.5	0	0	0.5	1.2	3
RWOL43	Olive Avenue	43rd Avenue	5280	1220.11	1208.48	0.0022	Phoenix	1	0	2	153	35.5	35.5	224	0	0	35.5	35.5	188.5	188.5	224	224	3	0.9	0.5	0	0	0.5	0.9	3
RWOL51	Olive Avenue	51st Avenue	5280	1208.48	1190.00	0.0035	Glendale	A-2	1	2	183	47.5	47.5	278	0	0	47.5	47.5	230.5	230.5	278	278	3	1.0	0.5	0	0	0.5	1.0	3
RWOL59	Olive Avenue	59th Avenue	5280	1190.00	1172.00	0.0034	Glendale	A-2	1	6	327	75.5	75.5	478	0	0	75.5	75.5	402.5	402.5	478	478	3	1.3	0.5	0	0	0.5	1.3	3
RWOL67	Olive Avenue	67th Avenue	5280	1172.00	1154.00	0.0034	Glendale	A-2	1	3	219	54.5	54.5	328	0	0	54.5	54.5	273.5	273.5	328	328	3	1.0	0.5	0	0	0.5	1.0	3
RWOL75	Olive Avenue	75th Avenue	5280	1154.00	1137.76	0.0031	Peoria	1	1	4	265	67	67	399	0	0	67	67	332	332	399	399	3	1.2	0.5	0	0	0.5	1.2	3
RWOL83	Olive Avenue	83rd Avenue	5280	1137.76	1123.53	0.0027	Peoria	1	0	1	122	26	26	174	0	0	26	26	148	148	174	174	3	0.8	0.5	0	0	0.5	0.8	3
RWOL91	Olive Avenue	91st Avenue	5280	1123.53	1110.07	0.0025	Peoria	1	1	5	296	76.5	76.5	449	0	0	76.5	76.5	372.5	372.5	449	449	3	1.3	0.5	0	0	0.5	1.3	3
RWOLLO	Olive Avenue	Loop 101	600	1110.07	1107.71	0.0039	Peoria	1	0	0	91	16.5	16.5	124	0	0	16.5	16.5	107.5	107.5	124	124	3	0.7	0.5	0	0	0.5	0.7	3
RWNO35	Northern Avenue	35th Avenue	5280	1201.00	1201.00	0.0001	Phoenix	1	1	5	296	76.5	76.5	449	0	0	76.5	76.5	372.5	372.5	449	449	3	1.3	0.5	0	0	0.5	1.3	3
RWNO43	Northern Avenue	43rd Avenue	5280	1201.00	1190.06	0.0021	Phoenix	1	1	9	420	114.5	114.5	649	0	0	114.5	114.5	534.5	534.5	649	649	3	1.6	0.5	0	0	0.5	1.6	3
RWNO51	Northern Avenue	51st Avenue	5280	1190.06	1180.13	0.0019	Glendale	A-4	1	5	317	65.5	65.5	448	0	0	65.5	65.5	382.5	382.5	448	448	3	1.2	0.5	0	0	0.5	1.2	3
RWNO59	Northern Avenue	59th Avenue	5280	1180.13	1159.10	0.0040	Glendale	A-4	1	4	281	58.5	58.5	398	0	0	58.5	58.5	339.5	339.5	398	398	3	1.1	0.5	0	0	0.5	1.1	3
RWNO67	Northern Avenue	67th Avenue	5280	1159.10	1143.81	0.0029	Glendale	A-4	1	4	281	58.5	58.5	398	0	0	58.5	58.5	339.5	339.5	398	398	3	1.1	0.5	0	0	0.5	1.1	3
RWNO75	Northern Avenue	75th Avenue	5280	1143.81	1127.79	0.0030	Peoria	1	0	0	91	16.5	16.5	124	0	0	16.5	16.5	107.5	107.5	124	124	3	0.7	0.5	0	0	0.5	0.7	3
RWNO83	Northern Avenue	83rd Avenue	5280	1127.79	1102.19	0.0048	Peoria	1	0	2	153	35.5	35.5	224	0	0	35.5	35.5	188.5	188.5	224	224	3	0.9	0.5	0	0	0.5	0.9	3
RWNO91	Northern Avenue	91st Avenue	5280	1102.19	1095.01	0.0014	Peoria	1	0	3	184	45	45	274	0	0	45	45	229	229	274	274	3	1.0	0.5	0	0	0.5	1.0	3
RWNOLO	Northern Avenue	Loop 101	3480	1095.01	1086.00	0.0026	Peoria	1	0	3	184	45	45	274	0	0	45	45	229	229	274	274	3	1.0	0.5	0	0	0.5	1.0	3
RWOW75	Orangewood Avenue	75th Avenue	5280	1134.45	1121.16	0.0025	Glendale	0	1	3	150	34	34	218	0	0	34	34	184	184	218	218	3	0.8	0.5	0	0	0.5	0.8	3
RWOW83	Orangewood Avenue	83rd Avenue	5280	1121.16	1106.00	0.0029	Glendale	0	1	1	78	20	20	118	0	0	20	20	98	98	118	118	3	0.7	0.5	0	0	0.5	0.7	3
RWOW91	Orangewood Avenue	91st Avenue	5280	1106.00	1086.00	0.0038	Glendale	0	0	1	36	7	7	50	0	0	7	7	43	43	50	50	3	0.6	0.5	0	0	0.5	0.6	3
RWGL51	Glendale Avenue	51st Avenue	5280	1172.00	1166.00	0.0011	Glendale	A-1	1	4	255	61.5	61.5	378	0	0	61.5	61.5	316.5	316.5	378	378	3	1.1	0.5	0	0	0.5	1.1	3
RWGL59	Glendale Avenue	59th Avenue	5280	1166.00	1149.56	0.0031	Glendale	A-1	1	5	291	68.5	68.5	428	0	0	68.5	68.5	359.5	359.5	428	428	3	1.2	0.5	0	0	0.5	1.2	3
RWGL67	Glendale Avenue	67th Avenue	5280	1149.56	1129.99	0.0037	Glendale	A-1	0	3	177	41.5	41.5	260	0	0	41.5	41.5	218.5	218.5	260	260	3	0.9	0.5	0	0	0.5	0.9	3
RWGL75	Glendale Avenue	75th Avenue	5280	1129.99	1112.00	0.0034	Glendale	A-5	0	4	236	47	47	330	0	0	47	47	283	283	330	330	3	1.0	0.5	0	0	0.5	1.0	3
RWGL83	Glendale Avenue	83rd Avenue	5280	1112.00	1095.10	0.0032	Glendale	A-5	0	4	236	47	47	330	0	0	47	47	283	283	330	330	3	1.0	0.5	0	0	0.5	1.0	3
RWGL91	Glendale Avenue	91st Avenue	5280	1095.10	1078.00	0.0032	Glendale	A-5	0	2	164	33	33	230	0	0	33	33	197	197	230	230	3	0.8	0.5	0	0	0.5	0.8	3
RWGLLO	Glendale Avenue	Loop 101	4441	1078.00	1066.02	0.0027	Glendale	A-5	0	0	92	19	19	130	0	0	19	19	111	111	130	130	3	0.7	0.5	0	0	0.5	0.7	3
RWBH35	Bethany Home Road	35th Avenue	5280	1159.29	1158.00	0.0002	Phoenix	1	1	6	327	86	86	499	0	0	86	86	413	413	499	499	3	1.4	0.5	0	0	0.5	1.4	3
RWBH43	Bethany Home Road	43rd Avenue	5280	1158.00	1157.30	0.0001	Phoenix	1	1	11	482	133.5	133.5	749	0	0	133.5	133.5	615.5	615.5	749	749	3	1.8	0.5	0	0	0.5	1.8	3
RWBH51	Bethany Home Road	51st Avenue	5280	1157.30	1149.00	0.0016	Glendale	A-1	1	6	327	75.5	75.5	478	0	0	75.5	75.5	402.5	402.5	478	478	3	1.3	0.5	0	0	0.5	1.3	3
RWBH59	Bethany Home Road	59th Avenue	5280	1150.00	1137.00	0.0025	Glendale	A-1	1	2	183	47.5	47.5	278	0	0	47.5	47.5	230.5	230.5	278	278	3	1.0	0.5	0	0	0.5	1.0	3
RWBH67	Bethany Home Road	67th Avenue	5280	1137.00	1122.00	0.0028	Glendale	A-1	1	5	291	68.5	68.5	428	0	0	68.5	68.5	359.5	359.5	428	428	3	1.2	0.5	0	0	0.5	1.2	3
RWBH75	Bethany Home Road	75th Avenue	5280	1122.00	1102.19	0.0038	Glendale	A-1	1	4	255	61.5	61.5	378	0	0	61.5	61.5	316.5	316.5	378	378	3	1.1	0.5	0	0	0.5	1.1	3
RWBH83	Bethany Home Road	83rd Avenue	5280	1102.19	1084.20	0.0034	Glendale	A-1	1	2	183	47.5	47.5	278	0	0	47.5	47.5	230.5	230.5	278	278	3	1.0	0.5	0	0	0.5	1.0	3
RWCB35	Camelback Road	35th Avenue	5280	1140.00	1136.85	0.0006	Phoenix	1	1	8	389	105	105	599	0	0	105	105	494	494	599	599	3	1.6	0.5	0	0	0.5	1.6	3
RWCB43	Camelback Road	43rd Avenue	5280	1136.85	1140.19	0.0001	Phoenix	1	1	6	327	86	86	499	0	0	86	86	413	413	499	499	3	1.4	0.5	0	0	0.5	1.4	3
RWCB51	Camelback Road	51st Avenue	5280	1140.19	1133.00	0.0014	Phoenix	1	0	0	91	16.5	16.5	124	0	0	16.5	16.5	107.5	107.5	124	124	3	0.7	0.5	0	0	0.5	0.7	3
RWCB59	Camelback Road	59th Avenue	5280	1133.00	1121.00	0.0023	Phoenix	1	1	2	203	48	48	299	0	0	48	48	251	251	299	299	3	1.0	0.5	0	0	0.5	1.0	3
RWCB67	Camelback Road	67th Avenue	5280	1121.00	1108.00	0.0025	Phoenix	1	1	4	265	67	67	399	0	0	67	67	332	332	399	399	3	1.2	0.5	0	0	0.5	1.2	3
RWCB75	Camelback Road	75th Avenue	5280	1108.00	1095.19	0.0024	Phoenix	1	1	6	327	86	86	499	0	0	86	86	413	413	499	499	3	1.4	0.5	0	0	0.5	1.4	3
RWCB91	Camelback Road	91st Avenue	5280	1074.88	1056.00	0.0036	Phoenix	1	1	3	234	57.5	57.5	349	0	0	57.5	57.5	291.5	291.5	349	349	3	1.1	0.5	0	0	0.5	1.1	3
RWCBLO	Camelback Road	Loop 101	4287	1056.00	1044.00	0.0028	Phoenix	1	1	2	203	48	48	299	0	0	48	48	251	251	299	299	3	1.0	0.5	0	0	0.5	1.0	3
RWCBRI	Camelback Road	Roosevelt Irrigation	3883	1042.00	1034.00	0.0021	Phoenix	1	0	0	91	16.5	16.5	124	0	0	16.5	16.5	107.5	107.5	124	124	3	0.7	0.5	0	0	0.5	0.7	3
RWCBNR	Camelback Road	New River	3883	1034.00	1030.06	0.0010	Phoenix	1	0	0	91	16.5	16.5	124	0	0	16.5	16.5	107.5	107.5	124	124	3	0.7	0.5	0	0	0.5	0.7	3
RWIS35	Indian School Road	35th Avenue	5280	1119.96	1117.00	0.0006	Phoenix	1	1	7	358	95.5	95.5	549	0	0	95.5	95.5	453.5	453.5	549	549	3	1.5	0.5	0	0	0.5	1.5	3

Kimley-Horn and Associates, Inc.

Project: ***Glendale Stormwater Management Plan***
Subject: **Routing Reach Parameters - East/West Streets**
Model: **Maryvale**
Designed by: **MAF** Date 11/6/2009
Checked by: **AOM** Date 12/7/2009

KHA Project No. 091910009
City of Glendale No. 089017

Objective: To determine the routing reach parameters that will be entered into the HEC-1 model, namely: length, slope, and the RX and RY values

Routing Flows in the West Direction

Routing ID[1]	E/W Boundary Name[2]	N/S Boundary Name[2]	Length (ft)	USGE[3] (ft)	DSGE[3] (ft)	Slope (ft/ft)	City	Number or Type of Streets[4]			Width (ft)				RX								RY							
								Arterial[5]	Collector[6]	Local	Channel[7]	LOB[8]	ROB[8]	Total[9]	X1	X2	X3	X4	X5	X6	X7	X8	Y1	Y2	Y3	Y4	Y5	Y6	Y7	Y8
RWIS51	Indian School Road	51st Avenue	5280	1115.04	1113.68	0.0003	Phoenix	1	0	3	184	45	45	274	0	0	45	45	229	229	274	274	3	1.0	0.5	0	0	0.5	1.0	3
RWIS59	Indian School Road	59th Avenue	5280	1113.68	1105.00	0.0016	Phoenix	1	1	4	265	67	67	399	0	0	67	67	332	332	399	399	3	1.2	0.5	0	0	0.5	1.2	3
RWISGC	Indian School Road	Grand Canal	4300	1100.00	1096.00	0.0009	Phoenix	0	0	1	31	9.5	9.5	50	0	0	9.5	9.5	40.5	40.5	50	50	3	0.6	0.5	0	0	0.5	0.6	3
RWIS83	Indian School Road	83rd Avenue	5280	1078.00	1063.14	0.0028	Phoenix	1	1	5	296	76.5	76.5	449	0	0	76.5	76.5	372.5	372.5	449	449	3	1.3	0.5	0	0	0.5	1.3	3
RWIS91	Indian School Road	91st Avenue	5280	1063.14	1047.23	0.0030	Phoenix	1	0	4	215	54.5	54.5	324	0	0	54.5	54.5	269.5	269.5	324	324	3	1.0	0.5	0	0	0.5	1.0	3
RWISLO	Indian School Road	Loop 101	2651	1047.23	1036.97	0.0039	Phoenix	1	0	2	153	35.5	35.5	224	0	0	35.5	35.5	188.5	188.5	224	224	3	0.9	0.5	0	0	0.5	0.9	3
RWIS07	Indian School Road	107th Avenue	5280	1031.64	1020.14	0.0022	Phoenix	1	0	2	153	35.5	35.5	224	0	0	35.5	35.5	188.5	188.5	224	224	3	0.9	0.5	0	0	0.5	0.9	3
RWISAF	Indian School Road	Agua Fria River	6868	1020.14	1010.88	0.0013	Phoenix	1	1	4	265	67	67	399	0	0	67	67	332	332	399	399	3	1.2	0.5	0	0	0.5	1.2	3
RWGR67	Grand Avenue	67th Avenue	7222	1149.56	1143.81	0.0008	Glendale	A-1	1	6	327	75.5	75.5	478	0	0	75.5	75.5	402.5	402.5	478	478	3	1.3	0.5	0	0	0.5	1.3	3
RWGR75	Grand Avenue	75th Avenue	7409	1143.81	1137.76	0.0008	Glendale	A-4	1	2	209	44.5	44.5	298	0	0	44.5	44.5	253.5	253.5	298	298	3	0.9	0.5	0	0	0.5	0.9	3
RWGC43	Grand Canal	43rd Avenue	6627	1113.00	1106.94	0.0009	Phoenix	0	0	1	31	9.5	9.5	50	0	0	9.5	9.5	40.5	40.5	50	50	3	0.6	0.5	0	0	0.5	0.6	3
RWGC51	Grand Canal	51st Avenue	5614	1106.94	1103.91	0.0005	Phoenix	0	0	2	62	19	19	100	0	0	19	19	81	81	100	100	3	0.7	0.5	0	0	0.5	0.7	3
RWGC53	Grand Canal	53rd Avenue	1296	1106.00	1104.50	0.0012	Phoenix	0	0	1	31	9.5	9.5	50	0	0	9.5	9.5	40.5	40.5	50	50	3	0.6	0.5	0	0	0.5	0.6	3
RWGC67	Grand Canal	67th Avenue	3841	1105.00	1099.00	0.0016	Phoenix	1	1	2	203	48	48	299	0	0	48	48	251	251	299	299	3	1.0	0.5	0	0	0.5	1.0	3
RWTM35	Thomas Road	35th Avenue	5280	1099.00	1094.93	0.0008	Phoenix	1	0	0	91	16.5	16.5	124	0	0	16.5	16.5	107.5	107.5	124	124	3	0.7	0.5	0	0	0.5	0.7	3
RWTM43	Thomas Road	43rd Avenue	5280	1094.93	1093.30	0.0003	Phoenix	1	1	1	172	38.5	38.5	249	0	0	38.5	38.5	210.5	210.5	249	249	3	0.9	0.5	0	0	0.5	0.9	3
RWTM51	Thomas Road	51st Avenue	5280	1093.30	1090.97	0.0004	Phoenix	1	1	2	203	48	48	299	0	0	48	48	251	251	299	299	3	1.0	0.5	0	0	0.5	1.0	3
RWTM59	Thomas Road	59th Avenue	5280	1090.97	1084.00	0.0013	Phoenix	1	1	2	203	48	48	299	0	0	48	48	251	251	299	299	3	1.0	0.5	0	0	0.5	1.0	3
RWTM67	Thomas Road	67th Avenue	5280	1084.00	1076.00	0.0015	Phoenix	1	1	7	358	95.5	95.5	549	0	0	95.5	95.5	453.5	453.5	549	549	3	1.5	0.5	0	0	0.5	1.5	3
RWTM75	Thomas Road	75th Avenue	5280	1076.00	1064.00	0.0023	Phoenix	1	1	5	296	76.5	76.5	449	0	0	76.5	76.5	372.5	372.5	449	449	3	1.3	0.5	0	0	0.5	1.3	3
RWTM83	Thomas Road	83rd Avenue	5280	1064.00	1050.82	0.0025	Phoenix	1	1	5	296	76.5	76.5	449	0	0	76.5	76.5	372.5	372.5	449	449	3	1.3	0.5	0	0	0.5	1.3	3
RWTM91	Thomas Road	91st Avenue	5280	1050.82	1036.00	0.0028	Phoenix	1	1	9	420	114.5	114.5	649	0	0	114.5	114.5	534.5	534.5	649	649	3	1.6	0.5	0	0	0.5	1.6	3
RWTMLO	Thomas Road	Loop 101	2623	1036.00	1032.00	0.0015	Phoenix	1	0	0	91	16.5	16.5	124	0	0	16.5	16.5	107.5	107.5	124	124	3	0.7	0.5	0	0	0.5	0.7	3
RWTMRI	Thomas Road	Roosevelt Irrigation	2601	1026.00	1020.00	0.0023	Phoenix	0	0	1	31	9.5	9.5	50	0	0	9.5	9.5	40.5	40.5	50	50	3	0.6	0.5	0	0	0.5	0.6	3
RWTM07	Thomas Road	107th Avenue	2719	1022.00	1014.00	0.0029	Phoenix	1	0	0	91	16.5	16.5	124	0	0	16.5	16.5	107.5	107.5	124	124	3	0.7	0.5	0	0	0.5	0.7	3
RWTMAF	Thomas Road	Agua Fria River	8219	1014.00	997.58	0.0020	Phoenix	1	0	1	122	26	26	174	0	0	26	26	148	148	174	174	3	0.8	0.5	0	0	0.5	0.8	3
RWRI07	Roosevelt Irrigation	107th Avenue	5402	1026.00	1019.06	0.0013	Phoenix	1	0	0	91	16.5	16.5	124	0	0	16.5	16.5	107.5	107.5	124	124	3	0.7	0.5	0	0	0.5	0.7	3
RWRIAF	Roosevelt Irrigation	Agua Fria River	10904	1019.06	1011.18	0.0007	Phoenix	0	1	1	81	22	22	125	0	0	22	22	103	103	125	125	3	0.7	0.5	0	0	0.5	0.7	3
RWMD35	McDowell Road	35th Avenue	5280	1080.94	1076.10	0.0009	Phoenix	1	1	2	203	48	48	299	0	0	48	48	251	251	299	299	3	1.0	0.5	0	0	0.5	1.0	3
RWMD43	McDowell Road	43rd Avenue	5280	1076.10	1073.77	0.0004	Phoenix	1	1	7	358	95.5	95.5	549	0	0	95.5	95.5	453.5	453.5	549	549	3	1.5	0.5	0	0	0.5	1.5	3
RWMD51	McDowell Road	51st Avenue	5280	1073.77	1072.75	0.0002	Phoenix	1	1	3	234	57.5	57.5	349	0	0	57.5	57.5	291.5	291.5	349	349	3	1.1	0.5	0	0	0.5	1.1	3
RWMD59	McDowell Road	59th Avenue	5280	1072.75	1065.44	0.0014	Phoenix	1	1	3	234	57.5	57.5	349	0	0	57.5	57.5	291.5	291.5	349	349	3	1.1	0.5	0	0	0.5	1.1	3
RWMD67	McDowell Road	67th Avenue	5280	1065.44	1057.58	0.0015	Phoenix	1	1	4	265	67	67	399	0	0	67	67	332	332	399	399	3	1.2	0.5	0	0	0.5	1.2	3
RWMD75	McDowell Road	75th Avenue	5280	1057.58	1049.64	0.0015	Phoenix	1	1	7	358	95.5	95.5	549	0	0	95.5	95.5	453.5	453.5	549	549	3	1.5	0.5	0	0	0.5	1.5	3
RWMD83	McDowell Road	83rd Avenue	5280	1049.64	1036.02	0.0026	Phoenix	1	1	3	234	57.5	57.5	349	0	0	57.5	57.5	291.5	291.5	349	349	3	1.1	0.5	0	0	0.5	1.1	3
RWMD91	McDowell Road	91st Avenue	5280	1036.02	1024.99	0.0021	Phoenix	1	1	3	234	57.5	57.5	349	0	0	57.5	57.5	291.5	291.5	349	349	3	1.1	0.5	0	0	0.5	1.1	3
RWMDLO	McDowell Road	Loop 101	4061	1024.99	1020.78	0.0010	Phoenix	1	0	3	184	45	45	274	0	0	45	45	229	229	274	274	3	1.0	0.5	0	0	0.5	1.0	3
RWMD07	McDowell Road	107th Avenue	5792	1021.63	1010.90	0.0019	Phoenix	1	0	0	91	16.5	16.5	124	0	0	16.5	16.5	107.5	107.5	124	124	3	0.7	0.5	0	0	0.5	0.7	3
RMD07	McDowell Road	107th Avenue	6743	1020.00	1010.90	0.0013	Phoenix	0	1	0	50	12.5	12.5	75	0	0	12.5	12.5	62.5	62.5	75	75	3	0.6	0.5	0	0	0.5	0.6	3
RWMDAV	McDowell Road	Avondale Boulevard	5280	1010.90	998.84	0.0023	Phoenix	1	0	2	153	35.5	35.5	224	0	0	35.5	35.5	188.5	188.5	224	224	3	0.9	0.5	0	0	0.5	0.9	3
RWMDAF	McDowell Road	Agua Fria River	6890	998.84	980.56	0.0027	Phoenix	1	1	2	203	48	48	299	0	0	48	48	251	251	299	299	3	1.0	0.5	0	0	0.5	1.0	3
RWIN35	Interstate 10	35th Avenue	5280	1076.85	1074.00	0.0005	Phoenix	0	0	1	31	9.5	9.5	50	0	0	9.5	9.5	40.5	40.5	50	50	3	0.6	0.5	0	0	0.5	0.6	3
RWIN43	Interstate 10	43rd Avenue	5280	1074.00	1070.00	0.0008	Phoenix	0	0	1	31	9.5	9.5	50	0	0	9.5	9.5	40.5	40.5	50	50	3	0.6	0.5	0	0	0.5	0.6	3

Notes:
1. The Routing ID corresponds to the KK card in HEC-1.
2. Streets correspond to streets downstream of Routing ID.
3. Elevations taken from 2-ft contour data obtained from the Flood Control District of Maricopa County, taken in 1994 for the Maryvale ADMS.
4. For this study Arterial streets represent the mile streets, Collector streets represent the half-mile streets, and Local Streets are all other streets.
5. Streets within the City of Glendale are based on Glendale typical sections. Streets outside of Glendale are based on average street sections from the Cities of Peoria and Phoenix. Glendale arterial street typical section was selected based on City of Glendale Detail G-300.
6. The City of Glendale has several typical details for a collector street that are very similar. An average City of Glendale section was used for collector streets within Glendale. Collector streets outside of Glendal are based on average street sections from the Cities of Peoria and Phoenix.
7. The width of the channel is based on a composite street width from the typical details.
8. The left overbank and right overbank are based on composite street widths. The overbanks were calculated by subtracting the channel width from the right-of-way.
9. The total width is the composite right-of-way width for the street sections based on the typical details.
10. The RX and RY represent the 8-point cross section used in the Normal Depth routing method from HEC-1.
Curb heights were assumed to be 0.5 ft and a slope of 1% was used from the curb to the limits of the right-of-way.

Kimley-Horn and Associates, Inc.

Project: ***Glendale Stormwater Management Plan***
Subject: **Street Parameters for Diversion Calculations - North/South Streets**
Model: **Maryvale**
Designed by: **MAF** Date 11/6/2009 KHA Project No. 091910009
Checked by: **AOM** Date 12/7/2009 City of Glendale No. 089017

Objective: To determine the slope and composite width of the streets for diversion ratio calculations

Streets diverting flows in the south direction - no route (information may be used to calculate diversion)[1]

E/W Boundary Name[2]	N/S Boundary Name[2]	Length (ft)	USGE[3] (ft)	DSGE[3] (ft)	Slope (ft/ft)	City	Number or Type of Streets[4]			Width (ft)			
							Arterial[5]	Collector[6]	Local	Channel[7]	LOB[8]	ROB[8]	Total[9]
Grand Avenue	59th Avenue	5280	1149.56	1137.00	0.0024	Glendale	0	1	9	366	76	76	518
Grand Avenue	67th Avenue	2790	1143.81	1134.45	0.0034	Glendale	0	1	2	114	27	27	168
Grand Avenue	75th Avenue	5280	1137.76	1127.79	0.0019	Peoria	1	1	1	172	38.5	38.5	249
Grand Canal	75th Avenue	3751	1099.00	1096.00	0.0008	Phoenix	0	1	4	174	50.5	50.5	275
Grand Canal	83rd Avenue	5280	1095.19	1078.00	0.0033	Glendale	0	1	2	114	27	27	168
Van Buren Street	27th Avenue	1515	1076.85	1076.00	0.0006	Phoenix	1	0	0	91	16.5	16.5	124
Van Buren Street	35th Avenue	1765	1074.00	1070.00	0.0023	Phoenix	1	1	0	141	29	29	199
Van Buren Street	43rd Avenue	1540	1070.00	1065.00	0.0032	Phoenix	1	1	0	141	29	29	199

Notes:
1. Some subbasins may not use street routing but the slope and width of the streets must be calculated to determine the ratio of flow diverted west and south, which is based on the streets.
2. Streets correspond to streets downstream of where route would occur.
3. Elevations taken from 2-ft contour data obtained from the Flood Control District of Maricopa County, taken in 1994 for the Maryvale ADMS.
4. For this study Arterial streets represent the mile streets, Collector streets represent the half-mile streets, and Local Streets are all other streets.
5. Streets within the City of Glendale are based on Glendale typical sections. Streets outside of Glendale are based on average street sections from the Cities of Peoria and Phoenix. Glendale arterial street typical section was selected based on City of Glendale Detail G-300.
6. The City of Glendale has several typical details for a collector street that are very similar. An average City of Glendale section was used for collector streets within Glendale. Collector streets outside of Glendal are based on average street sections from the Cities of Peoria and Phoenix.
7. The width of the channel is based on a composite street width from the typical details.
8. The left overbank and right overbank are based on composite street widths. The overbanks were calculated by subtracting the channel width from the right-of-way.
9. The total width is the composite right-of-way width for the street sections based on the typical details.

Kimley-Horn and Associates, Inc.

Project: ***Glendale Stormwater Management Plan***
Subject: **Street Parameters for Diversion Calculations - East/West Streets**
Model: **Maryvale**
Designed by: **MAF** Date 11/6/2009 KHA Project No. 091910009
Checked by: **AOM** Date 12/7/2009 City of Glendale No. 089017

Objective: To determine the slope and composite width of the streets for diversion ratio calculations

Streets diverting flows in the west direction - no route (information is used to calculate diversions)[1]

E/W Boundary Name[2]	N/S Boundary Name[2]	Length (ft)	USGE[3] (ft)	DSGE[3] (ft)	Slope (ft/ft)	City	Number or Type of Streets[4]			Width (ft)			
							Arterial[5]	Collector[6]	Local	Channel[7]	LOB[8]	ROB[8]	Total[9]
Glendale Avenue	27th Avenue	5280	1184.00	1179.93	0.0008	Phoenix	1	1	9	420	114.5	114.5	649
Bethany Home Road	91st Avenue	5280	1084.00	1068.00	0.0030	Glendale	A-3	1	3	229	54.5	54.5	338
Camelback Road	107th Avenue	3883	1034.00	1030.06	0.0010	Phoenix	1	0	0	91	16.5	16.5	124
Grand Avenue	35th Avenue	5280	1117.00	1115.04	0.0004	Phoenix	0	1	5	205	60	60	325
Grand Avenue	43rd Avenue	5280	1140.19	1133.00	0.0014	Phoenix	1	1	3	234	57.5	57.5	349
Grand Avenue	59th Avenue	5280	1150.00	1137.00	0.0025	Glendale	A-1	1	2	183	47.5	47.5	278
Grand Avenue	83rd Avenue	5280	1137.76	1123.53	0.0027	Peoria	0	1	5	205	60	60	325
Grand Avenue	91st Avenue	5284	1140.00	1120.25	0.0037	Peoria	1	1	4	265	67	67	399
Grand Canal	Grand Avenue	3109	1117.00	1108.00	0.0029	Phoenix	1	0	0	91	16.5	16.5	124
Grand Canal	75th Avenue	6457	1099.00	1096.00	0.0005	Phoenix	0	1	6	236	69.5	69.5	375
Grand Canal	83rd Avenue	7466	1096.00	1084.00	0.0016	Glendale	0	0	5	180	35	35	250
Interstate 10	51st Avenue	5280	1070.00	1055.01	0.0028	Phoenix	0	0	1	31	9.5	9.5	50

Notes:
1. Some subbasins may not use street routing but the slope and width of the streets must be calculated to determine the ratio of flow diverted west and south, which is based on the streets.
2. Streets correspond to streets downstream of where route would occur.
3. Elevations taken from 2-ft contour data obtained from the Flood Control District of Maricopa County, taken in 1994 for the Maryvale ADMS.
4. For this study Arterial streets represent the mile streets, Collector streets represent the half-mile streets, and Local Streets are all other streets.
5. Streets within the City of Glendale are based on Glendale typical sections. Streets outside of Glendale are based on average street sections from the Cities of Peoria and Phoenix. Glendale arterial street typical section was selected based on City of Glendale Detail G-300.
6. The City of Glendale has several typical details for a collector street that are very similar. An average City of Glendale section was used for collector streets within Glendale. Collector streets outside of Glendal are based on average street sections from the Cities of Peoria and Phoenix.
7. The width of the channel is based on a composite street width from the typical details.
8. The left overbank and right overbank are based on composite street widths. The overbanks were calculated by subtracting the channel width from the right-of-way.
9. The total width is the composite right-of-way width for the street sections based on the typical details.

Kimley-Horn and Associates, Inc.

Project: ***Glendale Stormwater Management Plan***
Subject: **Storm Drain Diversion Parameters**
Model: **Maryvale**
Designed by: **ZRS** Date 11/4/2009 KHA Project No. 091910009
Checked by: **MAF** Date 12/14/2009 City of Glendale No. 089017

Objective: To determine the flow that will be diverted into the storm drain

Existing Storm Drain Diverts

Pipe Diversion ID	E/W Street Name	N/S Street Name	City	Mile Street Diameter	1/2 Mile Street Diameter	Mile Street Storm Drain Capacity	1/2 Mile Street Storm Drain Capacity	Combined Storm Drain Capacity
D91MD	McDowell Road	91st Avenue	Maryvale	90	---	345	---	345
D83MD	McDowell Road	83rd Avenue	Maryvale	90	---	340	---	340
D75MD	McDowell Road	75th Avenue	Maryvale	90	---	364	---	364
D27MD	McDowell Road	27th Avenue	Maryvale	72	---	246	---	246
D35MD	McDowell Road	35th Avenue	Maryvale	51	84	102	405	507
D67MD	McDowell Road	67th Avenue	Maryvale	90	---	400	---	400
D43MD	McDowell Road	43rd Avenue	Maryvale	69	84	225	404	629
D51MD	McDowell Road	51st Avenue	Maryvale	84	---	368	---	368
D59MD	McDowell Road	59th Avenue	Maryvale	90	---	468	---	468
D91TM	Thomas Road	91st Avenue	Maryvale	84	---	287	---	287
D83TM	Thomas Road	83rd Avenue	Maryvale	84	---	283	---	283
D75TM	Thomas Road	75th Avenue	Maryvale	84	---	303	---	303
D35TM	Thomas Road	35th Avenue	Maryvale	48	66	87	213	300
D67TM	Thomas Road	67th Avenue	Maryvale	78	---	273	---	273
D43TM	Thomas Road	43rd Avenue	Maryvale	69	84	225	404	629
D51TM	Thomas Road	51st Avenue	Maryvale	72	---	244	---	244
D59TM	Thomas Road	59th Avenue	Maryvale	84	---	389	---	389
D35GC	Grand Canal	35th Avenue	Maryvale	36	---	40	---	40
D43GC	Grand Canal	43rd Avenue	Maryvale	60	72	154	251	406
D51GC	Grand Canal	51st Avenue	Maryvale	54	---	113	---	113
DGCGR	Grand Canal	Grand Avenue	Maryvale	72	60	257	165	422
DGC53	Grand Canal	53rd Avenue	Maryvale	36	---	20	---	20
D59GC	Grand Canal	59th Avenue	Maryvale	72	---	258	---	258
DGC63	Grand Canal	63rd Avenue	Maryvale	72	---	258	---	258
D91IS	Indian School Road	91st Avenue	Maryvale	72	---	190	---	190
D83IS	Indian School Road	83rd Avenue	Maryvale	72	---	187	---	187
D75IS	Indian School Road	75th Avenue	Maryvale	60	---	123	---	123
D27IS	Indian School Road	27th Avenue	Maryvale	60	---	151	---	151
D67IS	Indian School Road	67th Avenue	Maryvale	66	---	175	---	175
D51IS	Indian School Road	51st Avenue	Maryvale	72	---	244	---	244
D59IS	Indian School Road	59th Avenue	Maryvale	81	---	353	---	353
D43IS	Indian School Road	43rd Avenue	Maryvale	60	72	154	251	406
D31IS	Indian School Road	31st Avenue	Maryvale	72	---	268	---	268
D35IS	Indian School Road	35th Avenue	Maryvale	36	---	40	---	40
D83CB	Camelback Road	83rd Avenue	Maryvale	24	---	10	---	10
D27CB	Camelback Road	27th Avenue	Maryvale	57	---	132	---	132
D29CB	Camelback Road	29th Avenue	Maryvale	57	---	132	---	132
D35CB	Camelback Road	35th Avenue	Maryvale	36	66	40	213	253
D39CB	Camelback Road	39th Avenue	Maryvale	72	---	268	---	268
D43CB	Camelback Road	43rd Avenue	Maryvale	60	---	155	---	155
D43BH	Bethany Home Road	43rd Avenue	Maryvale	54	72	117	268	385
D35BH	Bethany Home Road	35th Avenue	Maryvale	42	60	61	165	226
D27BH	Bethany Home Road	27th Avenue	Maryvale	57	---	132	---	132
DGL91	Glendale Avenue	91st Avenue	Glendale	90	---	449	---	449
DGL83	Glendale Avenue	83rd Avenue	Glendale	84	---	374	---	374
D59GL	Glendale Avenue	59th Avenue	Glendale	78	---	217	---	217
DGRGL	Glendale Avenue	Grand Avenue	Glendale	60	---	234	---	234
D47GL	Glendale Avenue	47th Avenue	Glendale	60	48	284	96	379
D43GL	Glendale Avenue	43rd Avenue	Maryvale	54	72	117	268	385
D27GL	Glendale Avenue	27th Avenue	Maryvale	57	---	132	---	132
D35GL	Glendale Avenue	35th Avenue	Maryvale	42	60	61	165	226
D83OW	Orangewood Avenue	83rd Avenue	Glendale	72	---	255	---	255
DOW75	Orangewood Avenue	75th Avenue	Glendale	48	---	66	---	66
DOW71	Orangewood Avenue	71st Avenue	Glendale	42	---	44	---	44

Kimley-Horn and Associates, Inc.

Project: ***Glendale Stormwater Management Plan***
Subject: **Storm Drain Diversion Parameters**
Model: **Maryvale**
Designed by: **ZRS** Date 11/4/2009 KHA Project No. 091910009
Checked by: **MAF** Date 12/14/2009 City of Glendale No. 089017

Objective: To determine the flow that will be diverted into the storm drain

Existing Storm Drain Diverts

Pipe Diversion ID	E/W Street Name	N/S Street Name	City	Mile Street Diameter	1/2 Mile Street Diameter	Mile Street Storm Drain Capacity	1/2 Mile Street Storm Drain Capacity	Combined Storm Drain Capacity
DOW67	Orangewood Avenue	67th Avenue	Glendale	66	---	181	---	181
DNOLO	Northern Avenue	Loop 101	Peoria	24	---	15	---	15
DNO91	Northern Avenue	91st Avenue	Peoria	60	---	69	---	69
DNO83	Northern Avenue	83rd Avenue	Peoria	72	---	233	---	233
DNO75	Northern Avenue	75th Avenue	Peoria	60	---	161	---	161
D27NO	Northern Avenue	27th Avenue	Maryvale	54	---	114	---	114
D29NO	Northern Avenue	29th Avenue	Maryvale	54	---	114	---	114
D35NO	Northern Avenue	35th Avenue	Maryvale	48	30	87	26	113
D43NO	Northern Avenue	43rd Avenue	Maryvale	54	54	117	124	241
DNO51	Northern Avenue	51st Avenue	Glendale	66	---	168	---	168
DNO59	Northern Avenue	59th Avenue	Glendale	72	---	134	---	134
DOL83	Olive Avenue	83rd Avenue	Peoria	90	---	243	---	243
DOL75	Olive Avenue	75th Avenue	Peoria	90	---	239	---	239
DOL71	Olive Avenue	71st Avenue	Peoria	78	---	386	---	386
DOL67	Olive Avenue	67th Avenue	Glendale	72	---	662	---	662
D35OL	Olive Avenue	35th Avenue	Maryvale	42	---	61	---	61
D43OL	Olive Avenue	43rd Avenue	Maryvale	48	---	85	---	85
DOL51	Olive Avenue	51st Avenue	Glendale	78	---	297	---	297
DOL59	Olive Avenue	59th Avenue	Glendale	90	---	475	---	475
DPELO	Peoria Avenue	Loop 101	Peoria	72	---	255	---	255
DPE91	Peoria Avenue	91st Avenue	Peoria	72	---	147	---	147
D75PE	Peoria Avenue	75th Avenue	Peoria	60	---	179	---	179
D67PE	Peoria Avenue	67th Avenue	Glendale	60	---	162	---	162
D59PE	Peoria Avenue	59th Avenue	Glendale	78	---	235	---	235
DPE83	Peoria Avenue	83rd Avenue	Peoria	48	---	112	---	112
DCT83	Cactus Road	83rd Avenue	Peoria	120	---	663	---	663
DCT75	Cactus Road	75th Avenue	Peoria	108	---	651	---	651
DCT67	Cactus Road	67th Avenue	Peoria	78	---	268	---	268
D59CT	Cactus Road	59th Avenue	Glendale	30	---	18	---	18
DTB83	Thunderbird Road	83rd Avenue	Peoria	72	---	247	---	247
DTB75	Thunderbird Road	75th Avenue	Peoria	66	---	161	---	161
DGW83	Greenway Road	83rd Avenue	Peoria	42	---	45	---	45
D67GR	Grand Avenue	67th Avenue	Glendale	108	---	546	---	546
D31GR	Grand Avenue	31st Avenue	Maryvale	72	---	257	---	257
DP39GR	Grand Avenue	39th Avenue	Maryvale	72	---	251	---	251
D27GR	Grand Avenue	27th Avenue	Maryvale	66	---	195	---	195
DBR59	Brown Avenue	63rd Avenue	Glendale	60	---	161	---	161
DML51	Mitchell Drive	51st Avenue	Maryvale	72	---	136	---	136
*	Grand Canal	55th Avenue	Maryvale	54	---	88	---	88

* Capacity calculation used to determine amount of flow to be diverted to SD as part of divert DEGC53/DWGC59

Future Storm Drain Diverts

Pipe Diversion ID	E/W Street Name	N/S Street Name	City	Mile Street Diameter	1/2 Mile Street Diameter	Mile Street Storm Drain Capacity	1/2 Mile Street Storm Drain Capacity	Combined Storm Drain Capacity
DBH75	Bethany Home Road	75th Avenue	Glendale	108	---	560	---	560
DCB59	Camelback Road	59th Avenue	Glendale	84	---	351	---	351
DCB67	Camelback Road	67th Avenue	Glendale	102	---	504	---	504

Multiple Street Routing Description

The multiple street diversions estimate how much of the runoff in a subbasin will flow south and how much will flow west. The diversion is a constant ratio based on normal depth calculations using Manning's equation. The ratio is based on the composite width of all the north/south streets and the slope of the north/south arterial street compared to the composite width of all the east/west streets and the slope of the east/west arterial.

According to Manning's Equation:

$$Q = \frac{1.49}{n} A\, R^{2/3} S^{1/2}$$

Where:

Q = Discharge, cfs

n = Manning's roughness coefficient

A = Cross-sectional area of flow, sq ft

R = Hydraulic radius, $\frac{A}{P_w}$

S = Slope, ft/ft

P_w= Wetted perimeter, ft

Assuming a rectangular street section, $A = W \times d$

Where:

W = Width, ft

d = depth, ft

Assuming the depth is negligible compared to the width, $P_w \cong W$

Manning's Equation becomes:

$$Q = \frac{1.49}{n} Wd \left(\frac{Wd}{W}\right)^{2/3} S^{1/2}$$

Which simplifies to:

$$Q = \frac{1.49}{n} W\, d^{5/3} S^{1/2}$$

The total discharge will equal the sum of the discharge diverted west and the discharge diverted south. The following equation shows this relationship, where the subscript T indicates the total discharge, W indicates the parameters for the flow diverted west, and S indicates the parameters for the flow diverted south.

$$Q_T = \frac{1.49}{n_w} W_w\, d_w{}^{5/3} S_w{}^{1/2} + \frac{1.49}{n_S} W_s\, d_s{}^{5/3} S_s{}^{1/2}$$

Assuming that $n \cong n_W \cong n_S$ and $d \cong d_W \cong d_S$, this becomes:

$$Q_T = \frac{1.49 d^{5/3}}{n} \left(W_w\, S_w{}^{1/2} + W_s\, S_s{}^{1/2}\right)$$

It is evident that Q_w depends on W_w and S_w and that Q_s depends on W_s and S_s, so the ratio for the discharge diverted west is $\frac{Q_W}{Q_T}$ or:

$$\frac{W_w\, S_w{}^{1/2}}{W_w\, S_w{}^{1/2} + W_s\, S_s{}^{1/2}}$$

And the ratio for the discharge diverted south is $\frac{Q_S}{Q_T}$ or:

$$\frac{W_s\, S_s{}^{1/2}}{W_w\, S_w{}^{1/2} + W_s\, S_s{}^{1/2}}$$

Kimley-Horn and Associates, Inc.

Project: ***Glendale Stormwater Management Plan***
Subject: **Multiple Street Diversion Parameters**
Model: **Maryvale**
Designed by: **MAF** Date 11/6/2009 KHA Project No. 091910009
Checked by: **AOM** Date 12/7/2009 City of Glendale No. 089017

Objective: To determine the percent of subbasin flow that will be diverted in the south and west directions

Diversion ID[1]	Retrieval ID[1]	E/W Boundary Name[2]	N/S Boundary Name[2]	E/W Width[3] (ft)	E/W Slope[4] (ft/ft)	N/S Width[3] (ft)	N/S Slope[4] (ft/ft)	Percent Diverted West[5]	Percent Diverted South[5]
DWTB75	DSCT67	Thunderbird Road	67th Avenue	299	0.0027	180	0.0035	60%	40%
DWTB83	DSCT75	Thunderbird Road	75th Avenue	449	0.0034	349	0.0038	55%	45%
DWTBLO	DSCT83	Thunderbird Road	83rd Avenue	124	0.0030	299	0.0030	29%	71%
DWCT67	DSPE59	Cactus Road	59th Avenue	178	0.0041	398	0.0037	32%	68%
DWCT75	DSPE67	Cactus Road	67th Avenue	449	0.0030	398	0.0022	57%	43%
DWCT83	DSPE75	Cactus Road	75th Avenue	349	0.0026	349	0.0027	50%	50%
DWCTLO	DSPE83	Cactus Road	83rd Avenue	449	0.0048	449	0.0023	59%	41%
DWPE59	DSOL51	Peoria Avenue	51st Avenue	548	0.0042	428	0.0031	60%	40%
DWPE67	DSOL59	Peoria Avenue	59th Avenue	348	0.0026	498	0.0023	43%	57%
DWPE75	DSOL67	Peoria Avenue	67th Avenue	499	0.0035	330	0.0031	62%	38%
DWPE83	DSOL75	Peoria Avenue	75th Avenue	349	0.0023	349	0.0027	48%	52%
DWGR91	DSGR83	Peoria Avenue	83rd Avenue	399	0.0037	399	0.0031	52%	48%
DWPELO	DSOL91	Peoria Avenue	91st Avenue	424	0.0017	499	0.0019	45%	55%
DWOL43	DSNO35	Olive Avenue	35th Avenue	224	0.0022	399	0.0036	30%	70%
DWOL51	DSNO43	Olive Avenue	43rd Avenue	278	0.0035	399	0.0035	41%	59%
DWOL59	DSNO51	Olive Avenue	51st Avenue	478	0.0034	328	0.0019	66%	34%
DWOL67	DSNO59	Olive Avenue	59th Avenue	328	0.0034	598	0.0024	39%	61%
DWOL75	DSNO67	Olive Avenue	67th Avenue	399	0.0031	398	0.0019	56%	44%
DWGR83	DSGR75	Olive Avenue	75th Avenue	325	0.0027	398	0.0019	49%	51%
DWOL91	DSNO83	Olive Avenue	83rd Avenue	449	0.0025	224	0.0040	61%	39%
DWOLLO	DSNO91	Olive Avenue	91st Avenue	124	0.0039	299	0.0029	33%	67%
DWNO35	DSGL27	Northern Avenue	27th Avenue	449	0.0000	174	0.0040	0%	100%
DWNO43	DSGL35	Northern Avenue	35th Avenue	649	0.0021	449	0.0032	54%	46%
DWNO51	DSGL43	Northern Avenue	43rd Avenue	448	0.0019	349	0.0034	49%	51%
DWNO59	DSGL51	Northern Avenue	51st Avenue	398	0.0040	378	0.0027	56%	44%
DWNO67	DSGL59	Northern Avenue	59th Avenue	398	0.0029	248	0.0018	67%	33%
DWGR75	DSGR67	Northern Avenue	67th Avenue	298	0.0030	518	0.0034	35%	65%
DWNO83	DSOW75	Northern Avenue	75th Avenue	224	0.0048	288	0.0025	52%	48%
DWNOLO	DSGL91	Northern Avenue	91st Avenue	274	0.0026	280	0.0032	47%	53%
DWOW75	DSGL67	Orangewood Avenue	67th Avenue	218	0.0025	160	0.0052	49%	51%
DWOW83	DSGL75	Orangewood Avenue	75th Avenue	118	0.0029	338	0.0035	24%	76%
DWOW91	DSGL83	Orangewood Avenue	83rd Avenue	50	0.0038	280	0.0041	15%	85%
DEGL27	DSBH35	Glendale Avenue	35th Avenue	649	0.0008	399	0.0049	39%	61%
DWGL51	DSBH43	Glendale Avenue	43rd Avenue	378	0.0011	349	0.0028	41%	59%
DWGL59	DSBH51	Glendale Avenue	51st Avenue	428	0.0031	378	0.0030	53%	47%
DWGR67	DSGR59	Glendale Avenue	59th Avenue	478	0.0037	518	0.0024	54%	46%
DWGL75	DSBH67	Glendale Avenue	67th Avenue	330	0.0034	478	0.0015	51%	49%
DWGL83	DSBH75	Glendale Avenue	75th Avenue	330	0.0032	428	0.0019	50%	50%

Kimley-Horn and Associates, Inc.

Project: ***Glendale Stormwater Management Plan***
Subject: **Multiple Street Diversion Parameters**
Model: **Maryvale**
Designed by: **MAF** Date 11/6/2009 KHA Project No. 091910009
Checked by: **AOM** Date 12/7/2009 City of Glendale No. 089017

Objective: To determine the percent of subbasin flow that will be diverted in the south and west directions

Diversion ID[1]	Retrieval ID[1]	E/W Boundary Name[2]	N/S Boundary Name[2]	E/W Width[3] (ft)	E/W Slope[4] (ft/ft)	N/S Width[3] (ft)	N/S Slope[4] (ft/ft)	Percent Diverted West[5]	Percent Diverted South[5]
DWGL91	DSBH83	Glendale Avenue	83rd Avenue	230	0.0032	498	0.0021	37%	63%
DWGLLO	DSBH91	Glendale Avenue	91st Avenue	130	0.0027	248	0.0019	38%	62%
DWBH35	DSCB27	Bethany Home Road	27th Avenue	499	0.0000	174	0.0037	0%	100%
DWBH43	DSCB35	Bethany Home Road	35th Avenue	749	0.0000	549	0.0040	0%	100%
DWBH51	DSCB43	Bethany Home Road	43rd Avenue	478	0.0016	349	0.0032	49%	51%
DWGR59	DSGR43	Bethany Home Road	51st Avenue	278	0.0025	175	0.0013	68%	32%
DWBH67	DSCB59	Bethany Home Road	59th Avenue	428	0.0028	299	0.0030	58%	42%
DWBH75	DSCB67	Bethany Home Road	67th Avenue	378	0.0038	349	0.0027	56%	44%
DWBH83	DSCB75	Bethany Home Road	75th Avenue	278	0.0034	499	0.0013	47%	53%
DWBH91	DSGC83	Bethany Home Road	83rd Avenue	338	0.0030	168	0.0033	66%	34%
DWCB35	DSIS27	Camelback Road	27th Avenue	599	0.0000	174	0.0038	0%	100%
DWCB43	DSIS35	Camelback Road	35th Avenue	499	0.0000	499	0.0038	0%	100%
DWGR43	DSGR35	Camelback Road	43rd Avenue	349	0.0014	299	0.0033	43%	57%
DWCB59	DSIS51	Camelback Road	51st Avenue	299	0.0023	249	0.0037	49%	51%
DWCB67	DSIS59	Camelback Road	59th Avenue	399	0.0025	399	0.0030	47%	53%
DWCB75	DSGC67	Camelback Road	67th Avenue	499	0.0024	449	0.0017	57%	43%
DWGC83	DSGC75	Camelback Road	75th Avenue	250	0.0016	275	0.0008	56%	44%
DWCB91	DSIS83	Camelback Road	83rd Avenue	349	0.0036	349	0.0022	56%	44%
DWCBLO	DSIS91	Camelback Road	91st Avenue	299	0.0028	349	0.0017	53%	47%
DWCBRI	DSIS99	Camelback Road	99th Avenue	124	0.0021	124	0.0020	51%	49%
DWCB07	DSIS07	Camelback Road	Roosevelt Irrigation	124	0.0010	174	0.0026	31%	69%
DWCBNR	DIS07	Camelback Road	107th Avenue	124	0.0010	174	0.0026	31%	69%
DWIS35	DSGC27	Indian School Road	27th Avenue	549	0.0000	124	0.0028	0%	100%
DWGR35	DSGC35	Indian School Road	35th Avenue	325	0.0000	124	0.0033	0%	100%
DWIS51	DSGC43	Indian School Road	43rd Avenue	274	0.0003	349	0.0038	17%	83%
DWIS59	DSGC51	Indian School Road	51st Avenue	399	0.0016	399	0.0045	38%	62%
DWGC67	DSGC59	Indian School Road	59th Avenue	299	0.0016	349	0.0025	40%	60%
DWIS83	DSTM75	Indian School Road	75th Avenue	449	0.0028	249	0.0027	65%	35%
DWIS91	DSTM83	Indian School Road	83rd Avenue	324	0.0030	449	0.0023	45%	55%
DWISLO	DSTM91	Indian School Road	91st Avenue	224	0.0039	399	0.0021	43%	57%
DWIS07	DSTM99	Indian School Road	99th Avenue	224	0.0022	124	0.0009	74%	26%
DWISAF	DSRI07	Indian School Road	107th Avenue	399	0.0013	174	0.0008	75%	25%
DGR35	DEGR35	Grand Avenue*	43rd Avenue*	248	0.0028	124	0.0033	65%	35%
DWCB51	DSIS43	Grand Avenue*	43rd Avenue*	124	0.0014	124	0.0048	35%	65%
DWGC43	DSTM35	Grand Canal	35th Avenue	50	0.0009	124	0.0051	15%	85%
DWGC75	DSISGC	Grand Canal	67th Avenue	375	0.0005	175	0.0022	49%	51%
DWTM35	DSMD27	Thomas Road	27th Avenue	124	0.0008	124	0.0034	32%	68%
DWTM43	DSMD35	Thomas Road	35th Avenue	249	0.0003	399	0.0036	16%	84%

Kimley-Horn and Associates, Inc.

Project: ***Glendale Stormwater Management Plan***
Subject: **Multiple Street Diversion Parameters**
Model: **Maryvale**
Designed by: **MAF** Date 11/6/2009 KHA Project No. 091910009
Checked by: **AOM** Date 12/7/2009 City of Glendale No. 089017

Objective: To determine the percent of subbasin flow that will be diverted in the south and west directions

Diversion ID[1]	Retrieval ID[1]	E/W Boundary Name[2]	N/S Boundary Name[2]	E/W Width[3] (ft)	E/W Slope[4] (ft/ft)	N/S Width[3] (ft)	N/S Slope[4] (ft/ft)	Percent Diverted West[5]	Percent Diverted South[5]
DWTM51	DSMD43	Thomas Road	43rd Avenue	299	0.0004	399	0.0037	21%	79%
DWTM59	DSMD51	Thomas Road	51st Avenue	299	0.0013	324	0.0035	36%	64%
DWTM67	DSMD59	Thomas Road	59th Avenue	549	0.0015	249	0.0035	59%	41%
DWTM75	DSMD67	Thomas Road	67th Avenue	449	0.0023	299	0.0035	55%	45%
DWTM83	DSMD75	Thomas Road	75th Avenue	449	0.0025	399	0.0027	52%	48%
DWTM91	DSMD83	Thomas Road	83rd Avenue	649	0.0028	199	0.0028	77%	23%
DWTMLO	DSMD91	Thomas Road	91st Avenue	124	0.0015	349	0.0021	23%	77%
DWRI07	DSMD99	Thomas Road	99th Avenue	124	0.0013	124	0.0010	54%	46%
DWRIAF	DSTM07	Roosevelt Irrigation	107th Avenue	125	0.0007	124	0.0019	38%	62%
DWMD43	DSIN35	McDowell Road	35th Avenue	549	0.0004	449	0.0019	37%	63%
DWMD51	DSIN43	McDowell Road	43rd Avenue	349	0.0000	349	0.0042	0%	100%
DWMD59	DSIN51	McDowell Road	51st Avenue	349	0.0014	324	0.0007	61%	39%
DWMD67	DSIN59	McDowell Road	59th Avenue	399	0.0015	224	0.0047	50%	50%
DWMD75	DSIN67	McDowell Road	67th Avenue	549	0.0015	75	0.0027	85%	15%
DWMD83	DSIN75	McDowell Road	75th Avenue	349	0.0026	199	0.0022	65%	35%
DWMDLO	DSIN91	McDowell Road	91st Avenue	274	0.0010	50	0.0019	80%	20%
DWMD07	DSIN99	McDowell Road	99th Avenue	124	0.0019	124	0.0019	50%	50%
DWIN35	DSVB27	Interstate 10	27th Avenue	50	0.0005	124	0.0006	28%	72%
DWIN43	DSVB35	Interstate 10	35th Avenue	50	0.0008	199	0.0023	13%	87%
DWIN51	DSVB43	Interstate 10	43rd Avenue	50	0.0028	199	0.0032	19%	81%
DGC35	DEGCGR	Grand Avenue	35th Avenue	124	0.0029	124	0.0033	48%	52%
DSMD07	DWTMAF	Thomas Road	107th Avenue	174	0.0020	174	0.0006	65%	35%
DSIN07	DWMDAV	McDowell Road	107th Avenue	224	0.0023	124	0.0008	75%	25%
DSINAV	DWMDAF	McDowell Road	Avondale Boulevard	299	0.0027	124	0.0022	73%	27%

Notes:
1. The IDs correspond to KK and DT cards in HEC-1.
2. The street names are the streets at the southwest corner of the subbasin to be diverted.
3. The width is the composite width of the right-of-way of each road in the indicated direction.
4. The slope is the slope of the arterial street.
5. Percent diverted west = $W_w * S_w^{0.5} / (W_w * S_w^{0.5} + W_s * S_s^{0.5})$
   Percent diverted south = $W_s * S_s^{0.5} / (W_w * S_w^{0.5} + W_s * S_s^{0.5})$
   Where W_w = Width of west streets
   W_s = Width of south streets
   S_w = Slope of west arterial
   S_s = Slope of south arterial

* Because there is a 3-way diversion at the intersection of Grand and 35th Avenue, the percent diverted west for divert DGR35 uses a combination of the street widths in the west and south direction with an equivalent slope

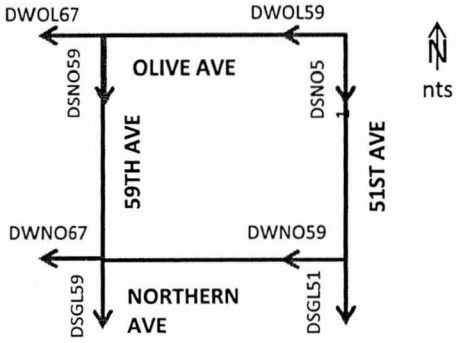

Kimley-Horn and Associates, Inc.

Project: ***Glendale Stormwater Management Plan***
Subject: **Parallel Street Diversion Parameters**
Model: **Maryvale**
Designed by: **MAF** Date 11/6/2009 KHA Project No. 091910009
Checked by: **AOM** Date 12/7/2009 City of Glendale No. 089017

Objective: To determine the percent of diverted flow that will be diverted to the arterial street and the collector/local streets.

Diverting Flows in the West Direction

Source Diversion ID[1]	E/W Boundary Name[2]	N/S Boundary Name[2]	Arterial Diversion ID[3]	Retrieval ID[3]	City[4]	Arterial Streets[5] Number/Type	Arterial Streets[5] Width (ft)[6]	Number of Collectors	Number of Local	Width (ft)[7]	Total Width (ft)[8]	Percent Diverted to Arterial[9]	Percent Diverted to Collector/Local[9]
DWGR91	Peoria Avenue	83rd Avenue	DGR91	DWPE91	Peoria	1	124	1	3	225	349	36%	64%
DWGR75	Northern Avenue	67th Avenue	DGR75	DWNO75	Glendale	A-4	130	1	4	268	398	33%	67%
DWGR67	Glendale Avenue	59th Avenue	DGR67	DWGL67	Glendale	A-1	110	1	5	318	428	26%	74%
DWGR59	Bethany Home Road	51st Avenue	DGR59	DWBH59	Glendale	A-1	110	1	6	368	478	23%	77%
DWGR43	Camelback Road	43rd Avenue	DGR43	DCB51	Phoenix	1	124	1	6	375	499	25%	75%

Diverting Flows in the South Direction

Source Diversion ID[1]	E/W Boundary Name[2]	N/S Boundary Name[2]	Arterial Diversion ID[3]	Retrieval ID[3]	City[4]	Arterial Streets[5] Number/Type	Arterial Streets[5] Width (ft)[6]	Number of Collectors	Number of Local	Width (ft)[7]	Total Width (ft)[8]	Percent Diverted to Arterial[9]	Percent Diverted to Collector/Local[9]
DSGR83	Peoria Avenue	83rd Avenue	D83GR	DSOL83	Peoria	1	124	1	5	325	449	28%	72%
DSGR75	Olive Avenue	75th Avenue	D75GR	DSNO75	Peoria	1	124	1	3	225	349	36%	64%
DSGR59	Glendale Avenue	59th Avenue	D59GR	DSBH59	Glendale	A-4	130	1	1	118	248	52%	48%
DSGR35	Camelback Road	43rd Avenue	D35GR	DS43IS	Phoenix	1	124	1	3	225	349	36%	64%
DSGC35	Indian School Road	35th Avenue	DS35GC	DSGCGR	Phoenix	1	124	1	6	375	499	25%	75%

Notes:
1. These IDs correspond to the divert in the indicated direction that will be split again to direct flow either to the arterial street or the local and collector streets.
2. The streets at the intersection where flow is to be diverted.
3. The IDs correspond to KK and DT cards in HEC-1 for the second divert.
4. Streets within the City of Glendale are based on Glendale typical sections. Streets outside of Glendale are based on average street sections from the Cities of Peoria and Phoenix. Glendale arterial street typical section was selected based on City of Glendale Detail G-300.
5. For this study Arterial streets represent the mile streets, Collector streets represent the half-mile streets, and Local Streets are all other streets.
6. The width of the right-of-way of the arterial street in the indicated direction.
7. The composite width of the right-of-way of the collector and local streets in the indicated direction.
8. The width of the right-of-way of the arterial, collector and local streets in the indicated direction.
9. The percent diverted in each direction is based on a ratio of the street widths.

Kimley-Horn and Associates, Inc.

Project: ***Glendale Stormwater Management Plan***
Subject: **Diversion Parameters**
Model: **Maryvale**
Designed by: **MAF** Date 11/6/2009 KHA Project No. 091910009
Checked by: **AOM** Date 12/7/2009 City of Glendale No. 089017

Objective: To determine the percent of subbasin flow that will be diverted in each direction

Diversions based on topography/aerials

Diversion ID[1]	Retrieval ID[1]	Percent Diverted[2]	Description of diversion
DSTB83	DWSK01	57%	Split subbasin GW83 based on topography
DWGRLO	DSPE91	67%	Split subbasin GR91 based on topography
DNGR67	DBH59	50%	Split subbasin GR59 based on topography
DSBHRI	DWNR04	100%	By inspection, nothing is going south
DSMDAV	DWAF02	89%	Based on topography and slope of intersection
DSINAF	DWAF03	76%	Split subbasin MDAF based on topography
DRIAF	DTM07	49%	Split subbasin RI07 based on topography
DWTMRI	DMD99	56%	Split subbasin MD99 based on topography
DBHNR	DWBHAF	79%	Split subbasin BHRI based on topography
DTM27	DGR27	50%	Split subbasin GR27 based on topography

Notes:
1. The IDs correspond to KK and DT cards in HEC-1.
2. These are subbasin diversions and were determined based on topography and 2009 aerial orthophotography.

Diversions based on channel capacities

Diversion ID[1]	Retrieval ID[1]	Channel Capacity[2] (cfs)	Description of diversion
DSCTLO	DWNR01	1,927	L101 channel capacity in subbasin CTLO
DSOLLO	DWNR02	7,462	L101 channel capacity in subbasin PELO
DSGLLO	DWNR03	917	L101 channel capacity in subbasin GLLO
DSPELO	DSGR91	1,299	L101 channel capacity in subbasin GR91
DWIN59	DSVB51	26,494	I-10 channel capacity in subbasin IN51
DWIN67	DSVB59	21,022	I-10 channel capacity in subbasin IN59
DWIN75	DSVB67	17,662	I-10 channel capacity in subbasin IN67
DWIN83	DSVB75	22,802	I-10 channel capacity in subbasin IN75
DWIN91	DSVB83	20,395	I-10 channel capacity in subbasin IN83
DWIN07	DNINLO	11,110	I-10 channel capacity in subbasin INLO
DWINAV	DSVB07	21,022	I-10 channel capacity in subbasin IN07
DWINAF	DSVBAF	22,225	I-10 channel capacity in subbasin INAV

Notes:
1. The IDs correspond to KK and DT cards in HEC-1.
2. FlowMaster (normal depth method) was used to calculated channel capacities using cross sections and slopes that were obtained from As-built records.

Kimley-Horn and Associates, Inc.

Project: ***Glendale Stormwater Management Plan***
Subject: **Diversion Parameters**
Model: **Maryvale**
Designed by: **MAF** Date 11/6/2009 KHA Project No. 091910009
Checked by: **AOM** Date 12/7/2009 City of Glendale No. 089017

Objective: To determine the percent of subbasin flow that will be diverted in each direction

Diversion based on data from Maryvale Area Drainage Master Study

Diversion ID[1]	Retrieval ID[1]	Maryvale Record ID	DI Records				DQ Records			
DWGC51	DSTM43	D43	0	200	2200		0	0	2000	
DWGC53	DSTM51	D47	0	300	2300	4250	0	0.1	2000	3950
DWISGC	DSTM59	D55	0	50	555	2689	0	0.2	505	1030
DWOL83	DS75NO	D26AW	0	2170	4810	52040	0	2170	4160	51390

Notes:

1. The IDs correspond to KK and DT cards in HEC-1.

Diversions based on channel capacities and spillways

Diversion ID[1]	Retrieval ID[1]	Length of Spillway (ft)	Channel Capacity Head over spillway (ft)				Discharge over Spillway Head over spillway (ft)			
			0	0.5	1	2	0	0.5	1	2
DWIN07	DNINLO	650	9505	10216	10958	12536	0	620	1755	4964
DSINLO	DEIN95	300	10390	11211	12070	13910	0	286	810	2291

Notes:

1. The IDs correspond to KK and DT cards in HEC-1.
2. FlowMaster (normal depth method) was used to calculated channel capacities using cross sections and slopes that were obtained from As-built records. The discharge of the spillway was calculated using the weir equation. $Q = C_w \times L \times H^{2/3}$, where $C_w = 2.7$, L is the length of the spillway, and H is the Head over the spillway.

Diversions based topography and storm drain capacity

Diversion ID[1]	Retrieval ID[1]	Topography Divert	DQ Record for specified inflow (cfs)							
			173	200	500	1000	2000	4000	10000	20000
DEGC53	DWGC59	51%	0	14	167	422	932	1952	5012	10112

Notes:

1. The IDs correspond to KK and DT cards in HEC-1.
2. After the split based on topography, a calculated storm drain capacity of 88 cfs was taken out to continue to the east.

Glendale/Peoria ADMPU Area Routing and Diversion Data

- DDMSW Existing Routing Data
- DDMSW Future Routing Data
- Routing Parameters
- Multiple Street Diversion Description
- Diversion Parameters

Route ID	Shape	Length (ft)	Slope (ft/ft)	Manning's N	Diameter (in)	Height (ft)	Width (ft)	Side Slope (h/v)
KINEMATIC WAVE								
Major Basin GP								
RP35AC	PIPE	3,523.00	0.0037	0.015	90	-	-	-
RP35CT	PIPE	5,200.00	0.0037	0.015	96	-	-	-
RP35GW	PIPE	5,260.00	0.0037	0.015	60	-	-	-
RP35PE	PIPE	5,256.00	0.0037	0.015	96	-	-	-
RP35TB	PIPE	5,252.00	0.0037	0.015	78	-	-	-
RP43CT	PIPE	5,194.00	0.0035	0.015	78	-	-	-
RP43GW	PIPE	5,150.00	0.0035	0.015	54	-	-	-
RP43PE	PIPE	4,928.00	0.0035	0.015	84	-	-	-
RP43TB	PIPE	5,245.00	0.0035	0.015	60	-	-	-
RP51CT	PIPE	5,189.00	0.0033	0.015	72	-	-	-
RP51GW	PIPE	4,986.00	0.0033	0.015	36	-	-	-
RP51TB	PIPE	5,283.00	0.0033	0.015	60	-	-	-
RP59AM	PIPE	2,519.00	0.0027	0.015	78	-	-	-
RP59GW	PIPE	4,995.00	0.0030	0.015	54	-	-	-
RP59TB	PIPE	2,759.00	0.0027	0.015	60	-	-	-
RP67AC	PIPE	1,168.00	0.0090	0.015	84	-	-	-
RP67GW	PIPE	5,072.00	0.0023	0.015	36	-	-	-
RP83WL	PIPE	2,980.00	0.0022	0.015	36	-	-	-
RP87PP	PIPE	1,251.00	0.0079	0.015	48	-	-	-
RP91AT	PIPE	1,467.00	0.0043	0.015	96	-	-	-
RP91BL	PIPE	3,333.00	0.0035	0.015	78	-	-	-
RPBLNR	PIPE	1,896.00	0.0014	0.015	72	-	-	-
RPGWLO	PIPE	2,236.00	0.0007	0.015	84	-	-	-
RPPP83	PIPE	1,891.00	0.0009	0.015	72	-	-	-
RPPP87	PIPE	2,635.00	0.0020	0.015	54	-	-	-
RPSK67	PIPE	6,044.00	0.0020	0.015	24	-	-	-

Route ID	Shape	Length (ft)	Slope (ft/ft)	Manning's N	Diameter (in)	Height (ft)	Width (ft)	Side Slope (h/v)
RPUH43	PIPE	5,324.00	0.0037	0.015	114	-	-	-
RPUH51	PIPE	5,152.00	0.0035	0.015	132	-	-	-
RPUHNR	PIPE	1,703.00	0.0025	0.015	42	-	-	-

Route ID	LOB N	Chan N	ROB N	Length (ft)	Slope (ft/ft)	Max Elev (ft)		1.	2.	3.	4.	5.	6.	7.	8.
NORMAL DEPTH															
Major Basin GP															
RBL15A	0.045	0.015	0.045	6,041.00	0.0082	-	X:	-	-	40.00	50.00	60.00	70.00	110.00	110.00
							Y:	6.20	5.20	5.00	-	-	5.00	5.20	6.20
RBL15B	0.045	0.035	0.045	4,894.00	0.0020	-	X:	-	100.00	112.00	147.00	159.00	179.00	214.00	580.00
							Y:	8.00	6.00	-	-	6.00	7.00	7.00	9.00
RBL75A	0.045	0.035	0.045	4,730.00	0.0037	-	X:	-	-	19.00	25.00	30.00	36.00	55.00	55.00
							Y:	4.10	3.10	3.00	-	-	3.00	3.10	4.10
RBL75B	0.035	0.015	0.035	2,940.00	0.0048	-	X:	-	-	17.50	17.50	112.50	112.50	130.00	130.00
							Y:	3.00	0.68	0.50	-	-	0.50	0.68	3.00
RBL91	0.035	0.015	0.035	5,280.00	0.0045	-	X:	-	-	38.50	38.50	210.50	210.50	249.00	249.00
							Y:	3.00	0.88	0.50	-	-	0.50	0.88	3.00
RBL99	0.035	0.015	0.035	3,206.00	0.0041	-	X:	-	-	16.50	16.50	107.50	107.50	124.00	124.00
							Y:	3.00	0.66	0.50	-	-	0.50	0.66	3.00
RBLLO	0.035	0.015	0.035	9,255.00	0.0033	-	X:	-	-	17.50	17.50	112.50	112.50	130.00	130.00
							Y:	3.00	0.68	0.50	-	-	0.50	0.68	3.00
RBLNR	0.035	0.015	0.035	2,700.00	0.0028	-	X:	-	-	7.00	7.00	43.00	43.00	50.00	50.00
							Y:	3.00	0.57	0.50	-	-	0.50	0.57	3.00
RBN99	0.045	0.015	0.045	3,854.00	0.0052	-	X:	-	-	40.00	50.00	60.00	70.00	110.00	110.00
							Y:	6.20	5.20	5.00	-	-	5.00	5.20	6.20
RBY07	0.045	0.020	0.045	3,085.00	0.0019	-	X:	-	1.00	16.00	36.00	51.00	123.00	148.00	648.00
							Y:	16.00	8.00	-	-	8.00	8.00	9.00	11.00
RBY87	0.045	0.035	0.045	6,699.00	0.0045	-	X:	-	-	55.00	75.00	100.00	120.00	175.00	175.00
							Y:	11.20	10.20	10.00	-	-	10.00	10.20	11.20
RBY91	0.045	0.035	0.045	2,901.00	0.0041	-	X:	-	-	19.00	25.00	30.00	36.00	55.00	55.00
							Y:	4.10	3.10	3.00	-	-	3.00	3.10	4.10
RBY99	0.045	0.035	0.045	3,939.00	0.0041	-	X:	-	1.00	16.00	36.00	51.00	123.00	148.00	648.00
							Y:	16.00	8.00	-	-	8.00	8.00	9.00	11.00
RBYAF	0.045	0.035	0.045	8,144.00	0.0065	-	X:	-	-	19.00	25.00	30.00	36.00	55.00	55.00
							Y:	4.10	3.10	3.00	-	-	3.00	3.10	4.10
RBYNR A	0.045	0.035	0.045	6,713.00	0.0060	-	X:	-	-	19.00	25.00	30.00	36.00	55.00	55.00
							Y:	4.10	3.10	3.00	-	-	3.00	3.10	4.10
RBYNR B	0.045	0.015	0.045	3,176.00	0.0058	-	X:	-	3.00	5.00	29.00	41.00	65.00	67.00	70.00
							Y:	13.00	12.00	12.00	-	-	12.00	12.00	13.00

Route ID	LOB N	Chan N	ROB N	Length (ft)	Slope (ft/ft)	Max Elev (ft)		1.	2.	3.	4.	5.	6.	7.	8.
RCL07	0.045	0.035	0.045	5,019.00	0.0120	-	X:	-	-	55.00	75.00	100.00	120.00	175.00	175.00
							Y:	11.20	10.20	10.00	-	-	10.00	10.20	11.20
RCL57	0.045	0.035	0.045	5,676.00	0.0078	-	X:	-	-	40.00	50.00	60.00	70.00	110.00	110.00
							Y:	6.20	5.20	5.00	-	-	5.00	5.20	6.20
RCL67	0.045	0.035	0.045	3,990.00	0.0076	-	X:	-	-	40.00	50.00	60.00	70.00	110.00	110.00
							Y:	6.20	5.20	5.00	-	-	5.00	5.20	6.20
RCL77A	0.045	0.035	0.045	3,884.00	0.0111	-	X:	-	-	19.00	25.00	30.00	36.00	55.00	55.00
							Y:	4.10	3.10	3.00	-	-	3.00	3.10	4.10
RCL77B	0.045	0.035	0.045	2,864.00	0.0057	-	X:	-	480.00	500.00	518.00	544.00	609.00	900.00	1,121.00
							Y:	11.00	10.00	-	0.20	10.00	11.00	12.00	13.00
RCLAF A	0.045	0.020	0.045	2,211.00	0.0045	-	X:	-	-	40.00	50.00	60.00	70.00	110.00	110.00
							Y:	6.20	5.20	5.00	-	-	5.00	5.20	6.20
RCLAF B	0.045	0.035	0.045	2,215.00	0.0045	-	X:	-	-	19.00	25.00	30.00	36.00	55.00	55.00
							Y:	4.10	3.10	3.00	-	-	3.00	3.10	4.10
RDV07	0.045	0.035	0.045	6,455.00	0.0071	-	X:	-	-	40.00	50.00	60.00	70.00	110.00	110.00
							Y:	6.20	5.20	5.00	-	-	5.00	5.20	6.20
RDV83	0.045	0.015	0.045	2,933.00	0.0051	-	X:	-	-	40.00	50.00	60.00	70.00	110.00	110.00
							Y:	6.20	5.20	5.00	-	-	5.00	5.20	6.20
RDV87	0.035	0.015	0.035	5,316.00	0.0063	-	X:	-	-	12.50	12.50	62.50	62.50	75.00	75.00
							Y:	3.00	0.62	0.50	-	-	0.50	0.62	3.00
RDV91	0.035	0.015	0.035	5,295.00	0.0064	-	X:	-	-	16.50	16.50	107.50	107.50	124.00	124.00
							Y:	3.00	0.66	0.50	-	-	0.50	0.66	3.00
RDVAF	0.045	0.035	0.045	3,702.00	0.0135	-	X:	-	-	19.00	25.00	30.00	36.00	55.00	55.00
							Y:	4.10	3.10	3.00	-	-	3.00	3.10	4.10
RDVLP	0.045	0.035	0.045	5,616.00	0.0059	-	X:	-	-	19.00	25.00	30.00	36.00	55.00	55.00
							Y:	4.10	3.10	3.00	-	-	3.00	3.10	4.10
RDVNR	0.045	0.015	0.045	2,707.00	0.0015	-	X:	-	-	19.00	25.00	30.00	36.00	55.00	55.00
							Y:	4.10	3.10	3.00	-	-	3.00	3.10	4.10
RDW07	0.045	0.015	0.045	4,743.00	0.0007	-	X:	-	-	40.00	50.00	60.00	70.00	110.00	110.00
							Y:	6.20	5.20	5.00	-	-	5.00	5.20	6.20
RDW99 A	0.045	0.015	0.045	2,292.00	0.0029	-	X:	-	-	40.00	50.00	60.00	70.00	110.00	110.00
							Y:	6.20	5.20	5.00	-	-	5.00	5.20	6.20
RDW99 B	0.045	0.035	0.045	2,848.00	0.0034	-	X:	-	-	19.00	25.00	30.00	36.00	55.00	55.00
							Y:	4.10	3.10	3.00	-	-	3.00	3.10	4.10

Route ID	LOB N	Chan N	ROB N	Length (ft)	Slope (ft/ft)	Max Elev (ft)		1.	2.	3.	4.	5.	6.	7.	8.
RGHNR	0.045	0.035	0.045	7,516.00	0.0045	-	X:	-	-	19.00	25.00	30.00	36.00	55.00	55.00
							Y:	4.10	3.10	3.00	-	-	3.00	3.10	4.10
RGL11	0.035	0.015	0.035	5,370.00	0.0041	-	X:	-	-	13.00	13.00	55.00	55.00	68.00	68.00
							Y:	3.00	0.63	0.50	-	-	0.50	0.63	3.00
RGL14A	0.045	0.035	0.045	7,959.00	0.0008	-	X:	-	-	55.00	75.00	100.00	120.00	175.00	175.00
							Y:	11.20	10.20	10.00	-	-	10.00	10.20	11.20
RGL14B	0.045	0.035	0.045	4,950.00	0.0021	-	X:	-	-	40.00	50.00	60.00	70.00	110.00	110.00
							Y:	6.20	5.20	5.00	-	-	5.00	5.20	6.20
RGLAF	0.045	0.035	0.045	3,487.00	0.0023	-	X:	-	-	55.00	75.00	100.00	120.00	175.00	175.00
							Y:	11.20	10.20	10.00	-	-	10.00	10.20	11.20
RGR99	0.045	0.020	0.045	12,358.00	0.0025	-	X:	-	-	40.00	50.00	60.00	70.00	110.00	110.00
A							Y:	6.20	5.20	5.00	-	-	5.00	5.20	6.20
RGR99	0.045	0.015	0.045	1,046.00	0.0060	-	X:	-	-	19.00	25.00	30.00	36.00	55.00	55.00
B							Y:	4.10	3.10	3.00	-	-	3.00	3.10	4.10
RGRNR	0.045	0.015	0.045	6,205.00	0.0045	-	X:	-	-	55.00	75.00	100.00	120.00	175.00	175.00
A							Y:	11.20	10.20	10.00	-	-	10.00	10.20	11.20
RGRNR	0.045	0.015	0.045	3,071.00	0.0051	-	X:	-	-	55.00	75.00	100.00	120.00	175.00	175.00
B							Y:	11.20	10.20	10.00	-	-	10.00	10.20	11.20
RGW91	0.035	0.015	0.035	5,450.00	0.0039	-	X:	-	-	16.50	16.50	107.50	107.50	124.00	124.00
							Y:	3.00	0.66	0.50	-	-	0.50	0.66	3.00
RGWLO	0.035	0.015	0.035	6,833.00	0.0066	-	X:	-	-	16.50	16.50	107.50	107.50	124.00	124.00
							Y:	3.00	0.66	0.50	-	-	0.50	0.66	3.00
RGWN	0.045	0.015	0.045	6,001.00	0.0010	-	X:	-	-	40.00	50.00	60.00	70.00	110.00	110.00
RA							Y:	6.20	5.20	5.00	-	-	5.00	5.20	6.20
RGWN	0.035	0.015	0.035	9,106.00	0.0029	-	X:	-	-	12.50	12.50	62.50	62.50	75.00	75.00
RB							Y:	3.00	0.62	0.50	-	-	0.50	0.62	3.00
RHV01	0.045	0.035	0.045	5,774.00	0.0093	-	X:	-	-	55.00	75.00	100.00	120.00	175.00	175.00
A							Y:	11.20	10.20	10.00	-	-	10.00	10.20	11.20
RHV01	0.045	0.035	0.045	2,017.00	0.0107	-	X:	-	-	40.00	50.00	60.00	70.00	110.00	110.00
B							Y:	6.20	5.20	5.00	-	-	5.00	5.20	6.20
RHV01	0.045	0.020	0.045	1,200.00	0.0174	-	X:	-	-	40.00	50.00	60.00	70.00	110.00	110.00
C							Y:	6.20	5.20	5.00	-	-	5.00	5.20	6.20
RHV75	0.045	0.020	0.045	7,197.00	0.0099	-	X:	-	-	40.00	50.00	60.00	70.00	110.00	110.00
							Y:	6.20	5.20	5.00	-	-	5.00	5.20	6.20

Route ID	LOB N	Chan N	ROB N	Length (ft)	Slope (ft/ft)	Max Elev (ft)		1.	2.	3.	4.	5.	6.	7.	8.
RHVAF	0.045	0.020	0.045	2,397.00	0.0013	-	X:	-	-	19.00	25.00	30.00	36.00	55.00	55.00
							Y:	4.10	3.10	3.00	-	-	3.00	3.10	4.10
RHVLP	0.045	0.020	0.045	4,021.00	0.0052	-	X:	-	-	19.00	25.00	30.00	36.00	55.00	55.00
							Y:	4.10	3.10	3.00	-	-	3.00	3.10	4.10
RHVRS	0.045	0.035	0.045	6,390.00	0.0071	-	X:	-	-	40.00	50.00	60.00	70.00	110.00	110.00
A							Y:	6.20	5.20	5.00	-	-	5.00	5.20	6.20
RHVRS	0.045	0.035	0.045	5,791.00	0.0051	-	X:	-	-	19.00	25.00	30.00	36.00	55.00	55.00
B							Y:	4.10	3.10	3.00	-	-	3.00	3.10	4.10
RJM67	0.045	0.020	0.045	4,129.00	0.0076	-	X:	-	-	19.00	25.00	30.00	36.00	55.00	55.00
							Y:	4.10	3.10	3.00	-	-	3.00	3.10	4.10
RJMLP	0.045	0.035	0.045	5,973.00	0.0084	-	X:	-	-	40.00	50.00	60.00	70.00	110.00	110.00
							Y:	6.20	5.20	5.00	-	-	5.00	5.20	6.20
RJMRS	0.045	0.035	0.045	4,005.00	0.0060	-	X:	-	-	40.00	50.00	60.00	70.00	110.00	110.00
							Y:	6.20	5.20	5.00	-	-	5.00	5.20	6.20
RLO75	0.035	0.015	0.035	7,499.00	0.0047	-	X:	-	-	13.00	13.00	55.00	55.00	68.00	68.00
							Y:	3.00	0.63	0.50	-	-	0.50	0.63	3.00
RMEAF	0.045	0.020	0.045	5,783.00	0.0053	-	X:	-	-	40.00	50.00	60.00	70.00	110.00	110.00
							Y:	6.20	5.20	5.00	-	-	5.00	5.20	6.20
RNO11	0.045	0.020	0.045	6,339.00	0.0057	-	X:	-	-	19.00	25.00	30.00	36.00	55.00	55.00
							Y:	4.10	3.10	3.00	-	-	3.00	3.10	4.10
RNONR	0.035	0.015	0.035	8,560.00	0.0031	-	X:	-	-	12.50	12.50	62.50	62.50	75.00	75.00
							Y:	3.00	0.62	0.50	-	-	0.50	0.62	3.00
ROL03A	0.045	0.015	0.045	7,132.00	0.0024	-	X:	-	-	40.00	50.00	60.00	70.00	110.00	110.00
							Y:	6.20	5.20	5.00	-	-	5.00	5.20	6.20
ROL03B	0.035	0.015	0.035	6,517.00	0.0026	-	X:	-	-	9.50	9.50	40.50	40.50	50.00	50.00
							Y:	3.00	0.60	0.50	-	-	0.50	0.60	3.00
ROL03	0.035	0.015	0.035	5,865.00	0.0030	-	X:	-	-	12.50	12.50	62.50	62.50	75.00	75.00
C							Y:	3.00	0.62	0.50	-	-	0.50	0.62	3.00
ROL99A	0.035	0.015	0.035	5,677.00	0.0038	-	X:	-	-	16.50	16.50	107.50	107.50	124.00	124.00
							Y:	3.00	0.66	0.50	-	-	0.50	0.66	3.00
ROL99B	0.045	0.015	0.045	1,627.00	0.0124	-	X:	-	-	40.00	50.00	60.00	70.00	110.00	110.00
							Y:	6.20	5.20	5.00	-	-	5.00	5.20	6.20
ROLNR	0.035	0.015	0.035	8,150.00	0.0031	-	X:	-	-	12.50	12.50	62.50	62.50	75.00	75.00
							Y:	3.00	0.62	0.50	-	-	0.50	0.62	3.00

Route ID	LOB N	Chan N	ROB N	Length (ft)	Slope (ft/ft)	Max Elev (ft)		1.	2.	3.	4.	5.	6.	7.	8.
RPE97	0.035	0.015	0.035	1,508.00	0.0023	-	X:	-	-	64.00	64.00	310.00	310.00	374.00	374.00
							Y:	3.00	1.14	0.50	-	-	0.50	1.14	3.00
RPP03A	0.045	0.035	0.045	2,970.00	0.0057	-	X:	-	-	19.00	25.00	30.00	36.00	55.00	55.00
							Y:	4.10	3.10	3.00	-	-	3.00	3.10	4.10
RPP03B	0.035	0.015	0.035	1,900.00	0.0047	-	X:	-	-	9.50	9.50	40.50	40.50	50.00	50.00
							Y:	3.00	0.60	0.50	-	-	0.50	0.60	3.00
RPP07	0.045	0.035	0.045	2,508.00	0.0128	-	X:	-	-	19.00	25.00	30.00	36.00	55.00	55.00
							Y:	4.10	3.10	3.00	-	-	3.00	3.10	4.10
RPP73A	0.045	0.035	0.045	5,599.00	0.0045	-	X:	-	-	40.00	50.00	60.00	70.00	110.00	110.00
							Y:	6.20	5.20	5.00	-	-	5.00	5.20	6.20
RPP73B	0.035	0.015	0.035	3,886.00	0.0064	-	X:	-	-	16.50	16.50	107.50	107.50	124.00	124.00
							Y:	3.00	0.66	0.50	-	-	0.50	0.66	3.00
RPP77	0.045	0.035	0.045	2,947.00	0.0041	-	X:	-	480.00	500.00	518.00	544.00	609.00	900.00	1,121.00
							Y:	11.00	10.00	-	0.20	10.00	11.00	12.00	13.00
RPP87	0.045	0.020	0.045	5,446.00	0.0172	-	X:	-	-	40.00	50.00	60.00	70.00	110.00	110.00
							Y:	6.20	5.20	5.00	-	-	5.00	5.20	6.20
RPPLP	0.035	0.015	0.035	8,751.00	0.0066	-	X:	-	-	9.50	9.50	40.50	40.50	50.00	50.00
							Y:	3.00	0.60	0.50	-	-	0.50	0.60	3.00
RPPNR	0.045	0.020	0.045	1,225.00	0.0052	-	X:	-	-	40.00	50.00	60.00	70.00	110.00	110.00
							Y:	6.20	5.20	5.00	-	-	5.00	5.20	6.20
RRG07 A	0.045	0.015	0.045	2,573.00	0.0027	-	X:	-	-	19.00	25.00	30.00	36.00	55.00	55.00
							Y:	4.10	3.10	3.00	-	-	3.00	3.10	4.10
RRG07 B	0.045	0.020	0.045	5,903.00	0.0059	-	X:	-	-	40.00	50.00	60.00	70.00	110.00	110.00
							Y:	6.20	5.20	5.00	-	-	5.00	5.20	6.20
RRG07 C	0.045	0.020	0.045	4,816.00	0.0056	-	X:	-	-	40.00	50.00	60.00	70.00	110.00	110.00
							Y:	6.20	5.20	5.00	-	-	5.00	5.20	6.20
RRG93	0.045	0.015	0.045	4,406.00	0.0036	-	X:	-	-	19.00	25.00	30.00	36.00	55.00	55.00
							Y:	4.10	3.10	3.00	-	-	3.00	3.10	4.10
RRGAF	0.045	0.020	0.045	4,328.00	0.0083	-	X:	-	-	40.00	50.00	60.00	70.00	110.00	110.00
							Y:	6.20	5.20	5.00	-	-	5.00	5.20	6.20
RRGLP A	0.045	0.020	0.045	2,633.00	0.0048	-	X:	-	-	40.00	50.00	60.00	70.00	110.00	110.00
							Y:	6.20	5.20	5.00	-	-	5.00	5.20	6.20
RRGLP B	0.045	0.020	0.045	3,160.00	0.0003	-	X:	-	-	19.00	25.00	30.00	36.00	55.00	55.00
							Y:	4.10	3.10	3.00	-	-	3.00	3.10	4.10

Route ID	LOB N	Chan N	ROB N	Length (ft)	Slope (ft/ft)	Max Elev (ft)		1.	2.	3.	4.	5.	6.	7.	8.
RSAC35	0.035	0.015	0.035	3,447.00	0.0041	-	X:	-	-	41.00	41.00	184.00	184.00	225.00	225.00
							Y:	3.00	0.91	0.50	-	-	0.50	0.91	3.00
RSAC67	0.035	0.015	0.035	1,216.00	0.0020	-	X:	-	-	34.00	34.00	184.00	184.00	218.00	218.00
							Y:	3.00	0.84	0.50	-	-	0.50	0.84	3.00
RSBL35	0.035	0.015	0.035	5,280.00	0.0030	-	X:	-	-	76.50	76.50	372.50	372.50	449.00	449.00
							Y:	3.00	1.27	0.50	-	-	0.50	1.27	3.00
RSBL43	0.035	0.015	0.035	5,280.00	0.0037	-	X:	-	-	48.00	48.00	251.00	251.00	299.00	299.00
							Y:	3.00	0.98	0.50	-	-	0.50	0.98	3.00
RSBL51	0.035	0.015	0.035	5,280.00	0.0040	-	X:	-	-	48.00	48.00	251.00	251.00	299.00	299.00
							Y:	3.00	0.98	0.50	-	-	0.50	0.98	3.00
RSCT35	0.035	0.015	0.035	5,280.00	0.0036	-	X:	-	-	86.00	86.00	413.00	413.00	499.00	499.00
							Y:	3.00	1.36	0.50	-	-	0.50	1.36	3.00
RSCT43	0.035	0.015	0.035	5,280.00	0.0030	-	X:	-	-	48.00	48.00	251.00	251.00	299.00	299.00
							Y:	3.00	0.98	0.50	-	-	0.50	0.98	3.00
RSCT51	0.035	0.015	0.035	5,280.00	0.0026	-	X:	-	-	26.00	26.00	148.00	148.00	174.00	174.00
							Y:	3.00	0.76	0.50	-	-	0.50	0.76	3.00
RSGW35	0.035	0.015	0.035	5,280.00	0.0041	-	X:	-	-	45.00	45.00	229.00	229.00	274.00	274.00
							Y:	3.00	0.95	0.50	-	-	0.50	0.95	3.00
RSGW43	0.035	0.015	0.035	5,280.00	0.0028	-	X:	-	-	57.50	57.50	291.50	291.50	349.00	349.00
							Y:	3.00	1.08	0.50	-	-	0.50	1.08	3.00
RSGW51	0.035	0.015	0.035	5,280.00	0.0035	-	X:	-	-	48.00	48.00	251.00	251.00	299.00	299.00
							Y:	3.00	0.98	0.50	-	-	0.50	0.98	3.00
RSGW59	0.035	0.015	0.035	5,280.00	0.0038	-	X:	-	-	38.50	38.50	241.50	241.50	280.00	280.00
							Y:	3.00	0.88	0.50	-	-	0.50	0.88	3.00
RSGW67	0.035	0.015	0.035	5,280.00	0.0025	-	X:	-	-	44.50	44.50	253.50	253.50	298.00	298.00
							Y:	3.00	0.94	0.50	-	-	0.50	0.94	3.00
RSK67	0.035	0.015	0.035	5,113.00	0.0037	-	X:	-	-	68.50	68.50	359.50	359.50	428.00	428.00
							Y:	3.00	1.18	0.50	-	-	0.50	1.18	3.00
RSPE35	0.035	0.015	0.035	5,280.00	0.0023	-	X:	-	-	67.00	67.00	332.00	332.00	399.00	399.00
							Y:	3.00	1.17	0.50	-	-	0.50	1.17	3.00
RSPE43	0.035	0.015	0.035	5,280.00	0.0024	-	X:	-	-	48.00	48.00	251.00	251.00	299.00	299.00
							Y:	3.00	0.98	0.50	-	-	0.50	0.98	3.00
RSTB35	0.035	0.015	0.035	5,280.00	0.0035	-	X:	-	-	54.50	54.50	269.50	269.50	324.00	324.00
							Y:	3.00	1.04	0.50	-	-	0.50	1.04	3.00

Route ID	LOB N	Chan N	ROB N	Length (ft)	Slope (ft/ft)	Max Elev (ft)		1.	2.	3.	4.	5.	6.	7.	8.
RSTB43	0.035	0.015	0.035	5,280.00	0.0038	-	X:	-	-	67.00	67.00	332.00	332.00	399.00	399.00
							Y:	3.00	1.17	0.50	-	-	0.50	1.17	3.00
RSTB51	0.035	0.015	0.035	5,280.00	0.0027	-	X:	-	-	38.50	38.50	210.50	210.50	249.00	249.00
							Y:	3.00	0.88	0.50	-	-	0.50	0.88	3.00
RSTB59	0.035	0.015	0.035	5,280.00	0.0026	-	X:	-	-	65.50	65.50	382.50	382.50	448.00	448.00
							Y:	3.00	1.16	0.50	-	-	0.50	1.16	3.00
RTB99	0.045	0.015	0.045	6,842.00	0.0039	-	X:	-	-	40.00	50.00	60.00	70.00	110.00	110.00
							Y:	6.20	5.20	5.00	-	-	5.00	5.20	6.20
RTBNR	0.035	0.015	0.035	6,342.00	0.0031	-	X:	-	-	16.50	16.50	107.50	107.50	124.00	124.00
							Y:	3.00	0.66	0.50	-	-	0.50	0.66	3.00
RTL07	0.035	0.015	0.035	8,131.00	0.0048	-	X:	-	-	16.50	16.50	107.50	107.50	124.00	124.00
							Y:	3.00	0.66	0.50	-	-	0.50	0.66	3.00
RUH11	0.045	0.020	0.045	2,740.00	0.0090	-	X:	-	1.00	13.00	23.00	53.00	83.00	108.00	109.00
							Y:	14.00	6.00	-	-	6.00	6.00	7.00	15.00
RUH15	0.045	0.035	0.045	2,598.00	0.0120	-	X:	-	50.00	62.00	72.00	84.00	104.00	139.00	640.00
							Y:	9.00	6.00	-	-	6.00	7.00	7.00	9.00
RUH75	0.045	0.035	0.045	7,047.00	0.0021	-	X:	-	-	19.00	25.00	30.00	36.00	55.00	55.00
							Y:	4.10	3.10	3.00	-	-	3.00	3.10	4.10
RUH87	0.045	0.035	0.045	6,701.00	0.0037	-	X:	-	-	40.00	50.00	60.00	70.00	110.00	110.00
							Y:	6.20	5.20	5.00	-	-	5.00	5.20	6.20
RUH91	0.045	0.035	0.045	9,978.00	0.0027	-	X:	-	-	19.00	25.00	30.00	36.00	55.00	55.00
							Y:	4.10	3.10	3.00	-	-	3.00	3.10	4.10
RUH99	0.045	0.015	0.045	5,347.00	0.0042	-	X:	-	-	19.00	25.00	30.00	36.00	55.00	55.00
							Y:	4.10	3.10	3.00	-	-	3.00	3.10	4.10
RUHSK	0.045	0.035	0.045	4,440.00	0.0034	-	X:	-	-	55.00	75.00	100.00	120.00	175.00	175.00
A							Y:	11.20	10.20	10.00	-	-	10.00	10.20	11.20
RUHSK	0.035	0.015	0.035	6,960.00	0.0034	-	X:	-	-	17.50	17.50	112.50	112.50	130.00	130.00
B							Y:	3.00	0.68	0.50	-	-	0.50	0.68	3.00
RWAC6	0.035	0.015	0.035	1,071.00	0.0029	-	X:	-	-	28.00	28.00	172.00	172.00	200.00	200.00
7							Y:	3.00	0.78	0.50	-	-	0.50	0.78	3.00
RWBL4	0.035	0.015	0.035	5,280.00	0.0047	-	X:	-	-	86.00	86.00	413.00	413.00	499.00	499.00
3							Y:	3.00	1.36	0.50	-	-	0.50	1.36	3.00
RWBL5	0.035	0.015	0.035	5,280.00	0.0040	-	X:	-	-	38.50	38.50	210.50	210.50	249.00	249.00
1							Y:	3.00	0.88	0.50	-	-	0.50	0.88	3.00

Route ID	LOB N	Chan N	ROB N	Length (ft)	Slope (ft/ft)	Max Elev (ft)		1.	2.	3.	4.	5.	6.	7.	8.
RWBL5	0.035	0.015	0.035	5,280.00	0.0031	-	X:	-	-	51.50	51.50	296.50	296.50	348.00	348.00
9							Y:	3.00	1.02	0.50	-	-	0.50	1.02	3.00
RWBL6	0.035	0.015	0.035	5,280.00	0.0037	-	X:	-	-	17.50	17.50	112.50	112.50	130.00	130.00
7							Y:	3.00	0.68	0.50	-	-	0.50	0.68	3.00
RWCT4	0.035	0.015	0.035	5,280.00	0.0029	-	X:	-	-	86.00	86.00	413.00	413.00	499.00	499.00
3							Y:	3.00	1.36	0.50	-	-	0.50	1.36	3.00
RWCT5	0.035	0.015	0.035	5,280.00	0.0032	-	X:	-	-	76.50	76.50	372.50	372.50	449.00	449.00
1							Y:	3.00	1.27	0.50	-	-	0.50	1.27	3.00
RWGW	0.035	0.015	0.035	5,280.00	0.0034	-	X:	-	-	76.50	76.50	372.50	372.50	449.00	449.00
43							Y:	3.00	1.27	0.50	-	-	0.50	1.27	3.00
RWGW	0.035	0.015	0.035	5,280.00	0.0047	-	X:	-	-	67.00	67.00	332.00	332.00	399.00	399.00
51							Y:	3.00	1.17	0.50	-	-	0.50	1.17	3.00
RWGW	0.035	0.015	0.035	5,280.00	0.0033	-	X:	-	-	68.50	68.50	359.50	359.50	428.00	428.00
59							Y:	3.00	1.18	0.50	-	-	0.50	1.18	3.00
RWGW	0.035	0.015	0.035	5,280.00	0.0025	-	X:	-	-	61.50	61.50	316.50	316.50	378.00	378.00
67							Y:	3.00	1.12	0.50	-	-	0.50	1.12	3.00
RWL59	0.045	0.035	0.045	8,099.00	0.0061	-	X:	-	-	40.00	50.00	60.00	70.00	110.00	110.00
							Y:	6.20	5.20	5.00	-	-	5.00	5.20	6.20
RWL67	0.035	0.015	0.035	1,195.00	0.0014	-	X:	-	-	20.50	20.50	89.50	89.50	110.00	110.00
							Y:	3.00	0.70	0.50	-	-	0.50	0.70	3.00
RWL75	0.035	0.015	0.035	5,062.00	0.0072	-	X:	-	-	7.00	7.00	43.00	43.00	50.00	50.00
A							Y:	3.00	0.57	0.50	-	-	0.50	0.57	3.00
RWL75	0.035	0.015	0.035	2,577.00	0.0049	-	X:	-	-	7.00	7.00	43.00	43.00	50.00	50.00
B							Y:	3.00	0.57	0.50	-	-	0.50	0.57	3.00
RWL83	0.045	0.035	0.045	3,222.00	0.0050	-	X:	-	-	19.00	25.00	30.00	36.00	55.00	55.00
							Y:	4.10	3.10	3.00	-	-	3.00	3.10	4.10
RWLNR	0.045	0.035	0.045	3,822.00	0.0048	-	X:	-	256.00	372.00	397.00	407.00	419.00	464.00	800.00
							Y:	12.00	10.00	8.00	-	-	6.00	8.00	12.00
RWPE4	0.035	0.015	0.035	5,280.00	0.0030	-	X:	-	-	105.00	105.00	494.00	494.00	599.00	599.00
3							Y:	3.00	1.55	0.50	-	-	0.50	1.55	3.00
RWTB4	0.035	0.015	0.035	5,280.00	0.0037	-	X:	-	-	95.50	95.50	453.50	453.50	549.00	549.00
3							Y:	3.00	1.46	0.50	-	-	0.50	1.46	3.00
RWTB5	0.035	0.015	0.035	5,280.00	0.0037	-	X:	-	-	76.50	76.50	372.50	372.50	449.00	449.00
1							Y:	3.00	1.27	0.50	-	-	0.50	1.27	3.00

Route ID	LOB N	Chan N	ROB N	Length (ft)	Slope (ft/ft)	Max Elev (ft)		1.	2.	3.	4.	5.	6.	7.	8.
RWTB5	0.035	0.015	0.035	5,280.00	0.0032	-	X:	-	-	37.50	37.50	210.50	210.50	248.00	248.00
9							Y:	3.00	0.88	0.50	-	-	0.50	0.88	3.00
RWUH4	0.035	0.015	0.035	5,280.00	0.0041	-	X:	-	-	67.00	67.00	332.00	332.00	399.00	399.00
3							Y:	3.00	1.17	0.50	-	-	0.50	1.17	3.00
RWUH5	0.035	0.015	0.035	5,280.00	0.0037	-	X:	-	-	76.50	76.50	372.50	372.50	449.00	449.00
1							Y:	3.00	1.27	0.50	-	-	0.50	1.27	3.00
RWWR	0.045	0.035	0.045	2,599.00	0.0063	-	X:	-	-	19.00	25.00	30.00	36.00	55.00	55.00
S							Y:	4.10	3.10	3.00	-	-	3.00	3.10	4.10

Route ID	Shape	Length (ft)	Slope (ft/ft)	Manning's N	Diameter (in)	Height (ft)	Width (ft)	Side Slope (h/v)
KINEMATIC WAVE								
Major Basin GP								
RP35AC	PIPE	3,523.00	0.0037	0.015	90	-	-	-
RP35CT	PIPE	5,200.00	0.0037	0.015	96	-	-	-
RP35GW	PIPE	5,260.00	0.0037	0.015	60	-	-	-
RP35PE	PIPE	5,256.00	0.0037	0.015	96	-	-	-
RP35TB	PIPE	5,252.00	0.0037	0.015	78	-	-	-
RP43CT	PIPE	5,194.00	0.0035	0.015	78	-	-	-
RP43GW	PIPE	5,150.00	0.0035	0.015	54	-	-	-
RP43PE	PIPE	4,928.00	0.0035	0.015	84	-	-	-
RP43TB	PIPE	5,245.00	0.0035	0.015	60	-	-	-
RP51CT	PIPE	5,189.00	0.0033	0.015	72	-	-	-
RP51GW	PIPE	4,986.00	0.0033	0.015	36	-	-	-
RP51TB	PIPE	5,283.00	0.0033	0.015	60	-	-	-
RP59AM	PIPE	2,519.00	0.0027	0.015	78	-	-	-
RP59GW	PIPE	4,995.00	0.0030	0.015	54	-	-	-
RP59TB	PIPE	2,759.00	0.0027	0.015	60	-	-	-
RP67AC	PIPE	1,168.00	0.0090	0.015	84	-	-	-
RP67GW	PIPE	5,072.00	0.0023	0.015	36	-	-	-
RP83WL	PIPE	2,980.00	0.0022	0.015	36	-	-	-
RP87PP	PIPE	1,251.00	0.0079	0.015	48	-	-	-
RP91AT	PIPE	1,467.00	0.0043	0.015	96	-	-	-
RP91BL	PIPE	3,333.00	0.0035	0.015	78	-	-	-
RPBLNR	PIPE	1,896.00	0.0014	0.015	72	-	-	-
RPGWLO	PIPE	2,236.00	0.0007	0.015	84	-	-	-
RPPP83	PIPE	1,891.00	0.0009	0.015	72	-	-	-
RPPP87	PIPE	2,635.00	0.0020	0.015	54	-	-	-
RPSK67	PIPE	6,044.00	0.0020	0.015	24	-	-	-

Route ID	Shape	Length (ft)	Slope (ft/ft)	Manning's N	Diameter (in)	Height (ft)	Width (ft)	Side Slope (h/v)
RPUH43	PIPE	5,324.00	0.0037	0.015	114	-	-	-
RPUH51	PIPE	5,152.00	0.0035	0.015	132	-	-	-
RPUHNR	PIPE	1,703.00	0.0025	0.015	42	-	-	-

Route ID	LOB N	Chan N	ROB N	Length (ft)	Slope (ft/ft)	Max Elev (ft)		1.	2.	3.	4.	5.	6.	7.	8.
NORMAL DEPTH															
Major Basin GP															
RBL15A	0.045	0.015	0.045	6,041.00	0.0082	-	X:	-	-	40.00	50.00	60.00	70.00	110.00	110.00
							Y:	6.20	5.20	5.00	-	-	5.00	5.20	6.20
RBL15B	0.045	0.035	0.045	4,894.00	0.0020	-	X:	-	100.00	112.00	147.00	159.00	179.00	214.00	580.00
							Y:	8.00	6.00	-	-	6.00	7.00	7.00	9.00
RBL75A	0.045	0.035	0.045	4,730.00	0.0037	-	X:	-	-	19.00	25.00	30.00	36.00	55.00	55.00
							Y:	4.10	3.10	3.00	-	-	3.00	3.10	4.10
RBL75B	0.035	0.015	0.035	2,940.00	0.0048	-	X:	-	-	17.50	17.50	112.50	112.50	130.00	130.00
							Y:	3.00	0.68	0.50	-	-	0.50	0.68	3.00
RBL91	0.035	0.015	0.035	5,280.00	0.0045	-	X:	-	-	38.50	38.50	210.50	210.50	249.00	249.00
							Y:	3.00	0.88	0.50	-	-	0.50	0.88	3.00
RBL99	0.035	0.015	0.035	3,206.00	0.0041	-	X:	-	-	16.50	16.50	107.50	107.50	124.00	124.00
							Y:	3.00	0.66	0.50	-	-	0.50	0.66	3.00
RBLLO	0.035	0.015	0.035	9,255.00	0.0033	-	X:	-	-	17.50	17.50	112.50	112.50	130.00	130.00
							Y:	3.00	0.68	0.50	-	-	0.50	0.68	3.00
RBLNR	0.035	0.015	0.035	2,700.00	0.0028	-	X:	-	-	7.00	7.00	43.00	43.00	50.00	50.00
							Y:	3.00	0.57	0.50	-	-	0.50	0.57	3.00
RBN99	0.045	0.015	0.045	3,854.00	0.0052	-	X:	-	-	40.00	50.00	60.00	70.00	110.00	110.00
							Y:	6.20	5.20	5.00	-	-	5.00	5.20	6.20
RBY07	0.045	0.020	0.045	3,085.00	0.0019	-	X:	-	1.00	16.00	36.00	51.00	123.00	148.00	648.00
							Y:	16.00	8.00	-	-	8.00	8.00	9.00	11.00
RBY87	0.045	0.035	0.045	6,699.00	0.0045	-	X:	-	-	55.00	75.00	100.00	120.00	175.00	175.00
							Y:	11.20	10.20	10.00	-	-	10.00	10.20	11.20
RBY91	0.045	0.035	0.045	2,901.00	0.0041	-	X:	-	-	19.00	25.00	30.00	36.00	55.00	55.00
							Y:	4.10	3.10	3.00	-	-	3.00	3.10	4.10
RBY99	0.045	0.035	0.045	3,939.00	0.0041	-	X:	-	1.00	16.00	36.00	51.00	123.00	148.00	648.00
							Y:	16.00	8.00	-	-	8.00	8.00	9.00	11.00
RBYAF	0.045	0.035	0.045	8,144.00	0.0065	-	X:	-	-	19.00	25.00	30.00	36.00	55.00	55.00
							Y:	4.10	3.10	3.00	-	-	3.00	3.10	4.10
RBYNR A	0.045	0.035	0.045	6,713.00	0.0060	-	X:	-	-	19.00	25.00	30.00	36.00	55.00	55.00
							Y:	4.10	3.10	3.00	-	-	3.00	3.10	4.10
RBYNR B	0.045	0.015	0.045	3,176.00	0.0058	-	X:	-	3.00	5.00	29.00	41.00	65.00	67.00	70.00
							Y:	13.00	12.00	12.00	-	-	12.00	12.00	13.00

Route ID	LOB N	Chan N	ROB N	Length (ft)	Slope (ft/ft)	Max Elev (ft)		1.	2.	3.	4.	5.	6.	7.	8.
RCL07	0.045	0.035	0.045	5,019.00	0.0120	-	X:	-	-	55.00	75.00	100.00	120.00	175.00	175.00
							Y:	11.20	10.20	10.00	-	-	10.00	10.20	11.20
RCL57	0.045	0.035	0.045	5,676.00	0.0078	-	X:	-	-	40.00	50.00	60.00	70.00	110.00	110.00
							Y:	6.20	5.20	5.00	-	-	5.00	5.20	6.20
RCL67	0.045	0.035	0.045	3,990.00	0.0076	-	X:	-	-	40.00	50.00	60.00	70.00	110.00	110.00
							Y:	6.20	5.20	5.00	-	-	5.00	5.20	6.20
RCL77A	0.045	0.035	0.045	3,884.00	0.0111	-	X:	-	-	19.00	25.00	30.00	36.00	55.00	55.00
							Y:	4.10	3.10	3.00	-	-	3.00	3.10	4.10
RCL77B	0.045	0.035	0.045	2,864.00	0.0057	-	X:	-	480.00	500.00	518.00	544.00	609.00	900.00	1,121.00
							Y:	11.00	10.00	-	0.20	10.00	11.00	12.00	13.00
RCLAF A	0.045	0.020	0.045	2,211.00	0.0045	-	X:	-	-	40.00	50.00	60.00	70.00	110.00	110.00
							Y:	6.20	5.20	5.00	-	-	5.00	5.20	6.20
RCLAF B	0.045	0.035	0.045	2,215.00	0.0045	-	X:	-	-	19.00	25.00	30.00	36.00	55.00	55.00
							Y:	4.10	3.10	3.00	-	-	3.00	3.10	4.10
RDV07	0.045	0.035	0.045	6,455.00	0.0071	-	X:	-	-	40.00	50.00	60.00	70.00	110.00	110.00
							Y:	6.20	5.20	5.00	-	-	5.00	5.20	6.20
RDV83	0.045	0.015	0.045	2,933.00	0.0051	-	X:	-	-	40.00	50.00	60.00	70.00	110.00	110.00
							Y:	6.20	5.20	5.00	-	-	5.00	5.20	6.20
RDV87	0.035	0.015	0.035	5,316.00	0.0063	-	X:	-	-	12.50	12.50	62.50	62.50	75.00	75.00
							Y:	3.00	0.62	0.50	-	-	0.50	0.62	3.00
RDVLP	0.045	0.035	0.045	5,616.00	0.0059	-	X:	-	-	19.00	25.00	30.00	36.00	55.00	55.00
							Y:	4.10	3.10	3.00	-	-	3.00	3.10	4.10
RDVNR	0.045	0.015	0.045	2,707.00	0.0015	-	X:	-	-	19.00	25.00	30.00	36.00	55.00	55.00
							Y:	4.10	3.10	3.00	-	-	3.00	3.10	4.10
RDW07	0.045	0.015	0.045	4,743.00	0.0007	-	X:	-	-	40.00	50.00	60.00	70.00	110.00	110.00
							Y:	6.20	5.20	5.00	-	-	5.00	5.20	6.20
RDW99 A	0.045	0.015	0.045	2,292.00	0.0029	-	X:	-	-	40.00	50.00	60.00	70.00	110.00	110.00
							Y:	6.20	5.20	5.00	-	-	5.00	5.20	6.20
RDW99 B	0.045	0.035	0.045	2,848.00	0.0034	-	X:	-	-	19.00	25.00	30.00	36.00	55.00	55.00
							Y:	4.10	3.10	3.00	-	-	3.00	3.10	4.10
RGHNR	0.045	0.035	0.045	7,516.00	0.0045	-	X:	-	-	19.00	25.00	30.00	36.00	55.00	55.00
							Y:	4.10	3.10	3.00	-	-	3.00	3.10	4.10
RGL11	0.035	0.015	0.035	5,370.00	0.0041	-	X:	-	-	13.00	13.00	55.00	55.00	68.00	68.00
							Y:	3.00	0.63	0.50	-	-	0.50	0.63	3.00

Route ID	LOB N	Chan N	ROB N	Length (ft)	Slope (ft/ft)	Max Elev (ft)		1.	2.	3.	4.	5.	6.	7.	8.
RGL14A	0.045	0.035	0.045	7,959.00	0.0008	-	X:	-	-	55.00	75.00	100.00	120.00	175.00	175.00
							Y:	11.20	10.20	10.00	-	-	10.00	10.20	11.20
RGL14B	0.045	0.035	0.045	4,950.00	0.0021	-	X:	-	-	40.00	50.00	60.00	70.00	110.00	110.00
							Y:	6.20	5.20	5.00	-	-	5.00	5.20	6.20
RGLAF	0.045	0.035	0.045	3,487.00	0.0023	-	X:	-	-	55.00	75.00	100.00	120.00	175.00	175.00
							Y:	11.20	10.20	10.00	-	-	10.00	10.20	11.20
RGR99 A	0.045	0.020	0.045	12,358.00	0.0025	-	X:	-	-	40.00	50.00	60.00	70.00	110.00	110.00
							Y:	6.20	5.20	5.00	-	-	5.00	5.20	6.20
RGR99 B	0.045	0.015	0.045	1,046.00	0.0060	-	X:	-	-	19.00	25.00	30.00	36.00	55.00	55.00
							Y:	4.10	3.10	3.00	-	-	3.00	3.10	4.10
RGRNR A	0.045	0.015	0.045	6,205.00	0.0045	-	X:	-	-	55.00	75.00	100.00	120.00	175.00	175.00
							Y:	11.20	10.20	10.00	-	-	10.00	10.20	11.20
RGRNR B	0.045	0.015	0.045	3,071.00	0.0051	-	X:	-	-	55.00	75.00	100.00	120.00	175.00	175.00
							Y:	11.20	10.20	10.00	-	-	10.00	10.20	11.20
RGW91	0.035	0.015	0.035	5,450.00	0.0039	-	X:	-	-	16.50	16.50	107.50	107.50	124.00	124.00
							Y:	3.00	0.66	0.50	-	-	0.50	0.66	3.00
RGWLO	0.035	0.015	0.035	6,833.00	0.0066	-	X:	-	-	16.50	16.50	107.50	107.50	124.00	124.00
							Y:	3.00	0.66	0.50	-	-	0.50	0.66	3.00
RGWN RA	0.045	0.015	0.045	6,001.00	0.0010	-	X:	-	-	40.00	50.00	60.00	70.00	110.00	110.00
							Y:	6.20	5.20	5.00	-	-	5.00	5.20	6.20
RGWN RB	0.035	0.015	0.035	9,106.00	0.0029	-	X:	-	-	12.50	12.50	62.50	62.50	75.00	75.00
							Y:	3.00	0.62	0.50	-	-	0.50	0.62	3.00
RHV01 A	0.045	0.035	0.045	5,774.00	0.0093	-	X:	-	-	55.00	75.00	100.00	120.00	175.00	175.00
							Y:	11.20	10.20	10.00	-	-	10.00	10.20	11.20
RHV01 B	0.045	0.035	0.045	2,017.00	0.0107	-	X:	-	-	40.00	50.00	60.00	70.00	110.00	110.00
							Y:	6.20	5.20	5.00	-	-	5.00	5.20	6.20
RHV01 C	0.045	0.020	0.045	1,200.00	0.0174	-	X:	-	-	40.00	50.00	60.00	70.00	110.00	110.00
							Y:	6.20	5.20	5.00	-	-	5.00	5.20	6.20
RHV75	0.045	0.020	0.045	7,197.00	0.0099	-	X:	-	-	40.00	50.00	60.00	70.00	110.00	110.00
							Y:	6.20	5.20	5.00	-	-	5.00	5.20	6.20
RHVAF	0.045	0.020	0.045	2,397.00	0.0013	-	X:	-	-	19.00	25.00	30.00	36.00	55.00	55.00
							Y:	4.10	3.10	3.00	-	-	3.00	3.10	4.10
RHVLP	0.045	0.020	0.045	4,021.00	0.0052	-	X:	-	-	19.00	25.00	30.00	36.00	55.00	55.00
							Y:	4.10	3.10	3.00	-	-	3.00	3.10	4.10

Route ID	LOB N	Chan N	ROB N	Length (ft)	Slope (ft/ft)	Max Elev (ft)		1.	2.	3.	4.	5.	6.	7.	8.
RHVRS A	0.045	0.035	0.045	6,390.00	0.0071	-	X:	-	-	40.00	50.00	60.00	70.00	110.00	110.00
							Y:	6.20	5.20	5.00	-	-	5.00	5.20	6.20
RHVRS B	0.045	0.035	0.045	5,791.00	0.0051	-	X:	-	-	19.00	25.00	30.00	36.00	55.00	55.00
							Y:	4.10	3.10	3.00	-	-	3.00	3.10	4.10
RJM67	0.045	0.020	0.045	4,129.00	0.0076	-	X:	-	-	19.00	25.00	30.00	36.00	55.00	55.00
							Y:	4.10	3.10	3.00	-	-	3.00	3.10	4.10
RJMLP	0.045	0.035	0.045	5,973.00	0.0084	-	X:	-	-	40.00	50.00	60.00	70.00	110.00	110.00
							Y:	6.20	5.20	5.00	-	-	5.00	5.20	6.20
RJMRS	0.045	0.035	0.045	4,005.00	0.0060	-	X:	-	-	40.00	50.00	60.00	70.00	110.00	110.00
							Y:	6.20	5.20	5.00	-	-	5.00	5.20	6.20
RLO75	0.035	0.015	0.035	7,499.00	0.0047	-	X:	-	-	13.00	13.00	55.00	55.00	68.00	68.00
							Y:	3.00	0.63	0.50	-	-	0.50	0.63	3.00
RMEAF	0.045	0.020	0.045	5,783.00	0.0053	-	X:	-	-	40.00	50.00	60.00	70.00	110.00	110.00
							Y:	6.20	5.20	5.00	-	-	5.00	5.20	6.20
RNO11	0.045	0.020	0.045	6,339.00	0.0057	-	X:	-	-	19.00	25.00	30.00	36.00	55.00	55.00
							Y:	4.10	3.10	3.00	-	-	3.00	3.10	4.10
RNONR	0.035	0.015	0.035	8,560.00	0.0031	-	X:	-	-	12.50	12.50	62.50	62.50	75.00	75.00
							Y:	3.00	0.62	0.50	-	-	0.50	0.62	3.00
ROL03A	0.045	0.015	0.045	7,132.00	0.0024	-	X:	-	-	40.00	50.00	60.00	70.00	110.00	110.00
							Y:	6.20	5.20	5.00	-	-	5.00	5.20	6.20
ROL03B	0.035	0.015	0.035	6,517.00	0.0026	-	X:	-	-	9.50	9.50	40.50	40.50	50.00	50.00
							Y:	3.00	0.60	0.50	-	-	0.50	0.60	3.00
ROL03 C	0.035	0.015	0.035	5,865.00	0.0030	-	X:	-	-	12.50	12.50	62.50	62.50	75.00	75.00
							Y:	3.00	0.62	0.50	-	-	0.50	0.62	3.00
ROL99A	0.035	0.015	0.035	5,677.00	0.0038	-	X:	-	-	16.50	16.50	107.50	107.50	124.00	124.00
							Y:	3.00	0.66	0.50	-	-	0.50	0.66	3.00
ROL99B	0.045	0.015	0.045	1,627.00	0.0124	-	X:	-	-	40.00	50.00	60.00	70.00	110.00	110.00
							Y:	6.20	5.20	5.00	-	-	5.00	5.20	6.20
ROLNR	0.035	0.015	0.035	8,150.00	0.0031	-	X:	-	-	12.50	12.50	62.50	62.50	75.00	75.00
							Y:	3.00	0.62	0.50	-	-	0.50	0.62	3.00
RPE97	0.035	0.015	0.035	1,508.00	0.0023	-	X:	-	-	64.00	64.00	310.00	310.00	374.00	374.00
							Y:	3.00	1.14	0.50	-	-	0.50	1.14	3.00
RPP03A	0.045	0.035	0.045	2,970.00	0.0057	-	X:	-	-	19.00	25.00	30.00	36.00	55.00	55.00
							Y:	4.10	3.10	3.00	-	-	3.00	3.10	4.10

Route ID	LOB N	Chan N	ROB N	Length (ft)	Slope (ft/ft)	Max Elev (ft)		1.	2.	3.	4.	5.	6.	7.	8.
RPP03B	0.040	0.040	0.040	1,960.00	0.0072	-	X:	-	100.00	140.00	160.00	200.00	300.00	400.00	500.00
							Y:	10.00	9.00	-	-	9.00	10.00	11.00	12.00
RPP07	0.050	0.050	0.050	2,468.00	0.0158	-	X:	-	100.00	140.00	160.00	200.00	300.00	400.00	500.00
							Y:	10.00	9.00	-	-	9.00	10.00	11.00	12.00
RPP73A	0.045	0.035	0.045	5,599.00	0.0045	-	X:	-	-	40.00	50.00	60.00	70.00	110.00	110.00
							Y:	6.20	5.20	5.00	-	-	5.00	5.20	6.20
RPP73B	0.035	0.015	0.035	3,886.00	0.0064	-	X:	-	-	16.50	16.50	107.50	107.50	124.00	124.00
							Y:	3.00	0.66	0.50	-	-	0.50	0.66	3.00
RPP77	0.045	0.035	0.045	2,947.00	0.0041	-	X:	-	480.00	500.00	518.00	544.00	609.00	900.00	1,121.00
							Y:	11.00	10.00	-	0.20	10.00	11.00	12.00	13.00
RPP87	0.045	0.020	0.045	5,446.00	0.0172	-	X:	-	-	40.00	50.00	60.00	70.00	110.00	110.00
							Y:	6.20	5.20	5.00	-	-	5.00	5.20	6.20
RPPAF	0.050	0.050	0.050	1,553.00	0.0300	-	X:	-	100.00	140.00	170.00	210.00	310.00	410.00	510.00
							Y:	10.00	9.00	-	-	9.00	10.00	11.00	12.00
RPPLP	0.035	0.015	0.035	8,751.00	0.0066	-	X:	-	-	9.50	9.50	40.50	40.50	50.00	50.00
A							Y:	3.00	0.60	0.50	-	-	0.50	0.60	3.00
RPPLP	0.040	0.040	0.040	5,844.00	0.0020	-	X:	-	100.00	140.00	160.00	200.00	300.00	400.00	500.00
B							Y:	10.00	9.00	-	-	9.00	10.00	11.00	12.00
RPPNR	0.045	0.020	0.045	1,225.00	0.0052	-	X:	-	-	40.00	50.00	60.00	70.00	110.00	110.00
							Y:	6.20	5.20	5.00	-	-	5.00	5.20	6.20
RRG07	0.045	0.015	0.045	2,573.00	0.0027	-	X:	-	-	19.00	25.00	30.00	36.00	55.00	55.00
A							Y:	4.10	3.10	3.00	-	-	3.00	3.10	4.10
RRG07	0.045	0.020	0.045	5,903.00	0.0059	-	X:	-	-	40.00	50.00	60.00	70.00	110.00	110.00
B							Y:	6.20	5.20	5.00	-	-	5.00	5.20	6.20
RRG07	0.045	0.020	0.045	4,816.00	0.0056	-	X:	-	-	40.00	50.00	60.00	70.00	110.00	110.00
C							Y:	6.20	5.20	5.00	-	-	5.00	5.20	6.20
RRGAF	0.045	0.020	0.045	4,328.00	0.0083	-	X:	-	-	40.00	50.00	60.00	70.00	110.00	110.00
							Y:	6.20	5.20	5.00	-	-	5.00	5.20	6.20
RRGLP	0.045	0.020	0.045	2,633.00	0.0048	-	X:	-	-	40.00	50.00	60.00	70.00	110.00	110.00
A							Y:	6.20	5.20	5.00	-	-	5.00	5.20	6.20
RRGLP	0.045	0.020	0.045	3,160.00	0.0003	-	X:	-	-	19.00	25.00	30.00	36.00	55.00	55.00
B							Y:	4.10	3.10	3.00	-	-	3.00	3.10	4.10
RSAC3	0.035	0.015	0.035	3,447.00	0.0041	-	X:	-	-	41.00	41.00	184.00	184.00	225.00	225.00
5							Y:	3.00	0.91	0.50	-	-	0.50	0.91	3.00

Route ID	LOB N	Chan N	ROB N	Length (ft)	Slope (ft/ft)	Max Elev (ft)		1.	2.	3.	4.	5.	6.	7.	8.
RSAC6	0.035	0.015	0.035	1,216.00	0.0020	-	X:	-	-	34.00	34.00	184.00	184.00	218.00	218.00
7							Y:	3.00	0.84	0.50	-	-	0.50	0.84	3.00
RSBL35	0.035	0.015	0.035	5,280.00	0.0030	-	X:	-	-	76.50	76.50	372.50	372.50	449.00	449.00
							Y:	3.00	1.27	0.50	-	-	0.50	1.27	3.00
RSBL43	0.035	0.015	0.035	5,280.00	0.0037	-	X:	-	-	48.00	48.00	251.00	251.00	299.00	299.00
							Y:	3.00	0.98	0.50	-	-	0.50	0.98	3.00
RSBL51	0.035	0.015	0.035	5,280.00	0.0040	-	X:	-	-	48.00	48.00	251.00	251.00	299.00	299.00
							Y:	3.00	0.98	0.50	-	-	0.50	0.98	3.00
RSCT35	0.035	0.015	0.035	5,280.00	0.0036	-	X:	-	-	86.00	86.00	413.00	413.00	499.00	499.00
							Y:	3.00	1.36	0.50	-	-	0.50	1.36	3.00
RSCT43	0.035	0.015	0.035	5,280.00	0.0030	-	X:	-	-	48.00	48.00	251.00	251.00	299.00	299.00
							Y:	3.00	0.98	0.50	-	-	0.50	0.98	3.00
RSCT51	0.035	0.015	0.035	5,280.00	0.0026	-	X:	-	-	26.00	26.00	148.00	148.00	174.00	174.00
							Y:	3.00	0.76	0.50	-	-	0.50	0.76	3.00
RSGW3	0.035	0.015	0.035	5,280.00	0.0041	-	X:	-	-	45.00	45.00	229.00	229.00	274.00	274.00
5							Y:	3.00	0.95	0.50	-	-	0.50	0.95	3.00
RSGW4	0.035	0.015	0.035	5,280.00	0.0028	-	X:	-	-	57.50	57.50	291.50	291.50	349.00	349.00
3							Y:	3.00	1.08	0.50	-	-	0.50	1.08	3.00
RSGW5	0.035	0.015	0.035	5,280.00	0.0035	-	X:	-	-	48.00	48.00	251.00	251.00	299.00	299.00
1							Y:	3.00	0.98	0.50	-	-	0.50	0.98	3.00
RSGW5	0.035	0.015	0.035	5,280.00	0.0038	-	X:	-	-	38.50	38.50	241.50	241.50	280.00	280.00
9							Y:	3.00	0.88	0.50	-	-	0.50	0.88	3.00
RSGW6	0.035	0.015	0.035	5,280.00	0.0025	-	X:	-	-	44.50	44.50	253.50	253.50	298.00	298.00
7							Y:	3.00	0.94	0.50	-	-	0.50	0.94	3.00
RSK67	0.035	0.015	0.035	5,113.00	0.0037	-	X:	-	-	68.50	68.50	359.50	359.50	428.00	428.00
							Y:	3.00	1.18	0.50	-	-	0.50	1.18	3.00
RSPE35	0.035	0.015	0.035	5,280.00	0.0023	-	X:	-	-	67.00	67.00	332.00	332.00	399.00	399.00
							Y:	3.00	1.17	0.50	-	-	0.50	1.17	3.00
RSPE43	0.035	0.015	0.035	5,280.00	0.0024	-	X:	-	-	48.00	48.00	251.00	251.00	299.00	299.00
							Y:	3.00	0.98	0.50	-	-	0.50	0.98	3.00
RSTB35	0.035	0.015	0.035	5,280.00	0.0035	-	X:	-	-	54.50	54.50	269.50	269.50	324.00	324.00
							Y:	3.00	1.04	0.50	-	-	0.50	1.04	3.00
RSTB43	0.035	0.015	0.035	5,280.00	0.0038	-	X:	-	-	67.00	67.00	332.00	332.00	399.00	399.00
							Y:	3.00	1.17	0.50	-	-	0.50	1.17	3.00

Route ID	LOB N	Chan N	ROB N	Length (ft)	Slope (ft/ft)	Max Elev (ft)		1.	2.	3.	4.	5.	6.	7.	8.
RSTB51	0.035	0.015	0.035	5,280.00	0.0027	-	X:	-	-	38.50	38.50	210.50	210.50	249.00	249.00
							Y:	3.00	0.88	0.50	-	-	0.50	0.88	3.00
RSTB59	0.035	0.015	0.035	5,280.00	0.0026	-	X:	-	-	65.50	65.50	382.50	382.50	448.00	448.00
							Y:	3.00	1.16	0.50	-	-	0.50	1.16	3.00
RTB99	0.045	0.015	0.045	6,842.00	0.0039	-	X:	-	-	40.00	50.00	60.00	70.00	110.00	110.00
							Y:	6.20	5.20	5.00	-	-	5.00	5.20	6.20
RTBNR	0.035	0.015	0.035	6,342.00	0.0031	-	X:	-	-	16.50	16.50	107.50	107.50	124.00	124.00
							Y:	3.00	0.66	0.50	-	-	0.50	0.66	3.00
RTL07	0.035	0.015	0.035	8,131.00	0.0048	-	X:	-	-	16.50	16.50	107.50	107.50	124.00	124.00
							Y:	3.00	0.66	0.50	-	-	0.50	0.66	3.00
RUH11	0.045	0.020	0.045	2,740.00	0.0090	-	X:	-	1.00	13.00	23.00	53.00	83.00	108.00	109.00
							Y:	14.00	6.00	-	-	6.00	6.00	7.00	15.00
RUH15	0.045	0.035	0.045	2,598.00	0.0120	-	X:	-	50.00	62.00	72.00	84.00	104.00	139.00	640.00
							Y:	9.00	6.00	-	-	6.00	7.00	7.00	9.00
RUH75	0.045	0.035	0.045	7,047.00	0.0021	-	X:	-	-	19.00	25.00	30.00	36.00	55.00	55.00
							Y:	4.10	3.10	3.00	-	-	3.00	3.10	4.10
RUH87	0.045	0.035	0.045	6,701.00	0.0037	-	X:	-	-	40.00	50.00	60.00	70.00	110.00	110.00
							Y:	6.20	5.20	5.00	-	-	5.00	5.20	6.20
RUH91	0.045	0.035	0.045	9,978.00	0.0027	-	X:	-	-	19.00	25.00	30.00	36.00	55.00	55.00
							Y:	4.10	3.10	3.00	-	-	3.00	3.10	4.10
RUH99	0.045	0.015	0.045	5,347.00	0.0042	-	X:	-	-	19.00	25.00	30.00	36.00	55.00	55.00
							Y:	4.10	3.10	3.00	-	-	3.00	3.10	4.10
RUHSK	0.045	0.035	0.045	4,440.00	0.0034	-	X:	-	-	55.00	75.00	100.00	120.00	175.00	175.00
A							Y:	11.20	10.20	10.00	-	-	10.00	10.20	11.20
RUHSK	0.035	0.015	0.035	6,960.00	0.0034	-	X:	-	-	17.50	17.50	112.50	112.50	130.00	130.00
B							Y:	3.00	0.68	0.50	-	-	0.50	0.68	3.00
RWAC6	0.035	0.015	0.035	1,071.00	0.0029	-	X:	-	-	28.00	28.00	172.00	172.00	200.00	200.00
7							Y:	3.00	0.78	0.50	-	-	0.50	0.78	3.00
RWBL4	0.035	0.015	0.035	5,280.00	0.0047	-	X:	-	-	86.00	86.00	413.00	413.00	499.00	499.00
3							Y:	3.00	1.36	0.50	-	-	0.50	1.36	3.00
RWBL5	0.035	0.015	0.035	5,280.00	0.0040	-	X:	-	-	38.50	38.50	210.50	210.50	249.00	249.00
1							Y:	3.00	0.88	0.50	-	-	0.50	0.88	3.00
RWBL5	0.035	0.015	0.035	5,280.00	0.0031	-	X:	-	-	51.50	51.50	296.50	296.50	348.00	348.00
9							Y:	3.00	1.02	0.50	-	-	0.50	1.02	3.00

Route ID	LOB N	Chan N	ROB N	Length (ft)	Slope (ft/ft)	Max Elev (ft)		1.	2.	3.	4.	5.	6.	7.	8.
RWBL6	0.035	0.015	0.035	5,280.00	0.0037	-	X:	-	-	17.50	17.50	112.50	112.50	130.00	130.00
7							Y:	3.00	0.68	0.50	-	-	0.50	0.68	3.00
RWCT4	0.035	0.015	0.035	5,280.00	0.0029	-	X:	-	-	86.00	86.00	413.00	413.00	499.00	499.00
3							Y:	3.00	1.36	0.50	-	-	0.50	1.36	3.00
RWCT5	0.035	0.015	0.035	5,280.00	0.0032	-	X:	-	-	76.50	76.50	372.50	372.50	449.00	449.00
1							Y:	3.00	1.27	0.50	-	-	0.50	1.27	3.00
RWGW	0.035	0.015	0.035	5,280.00	0.0034	-	X:	-	-	76.50	76.50	372.50	372.50	449.00	449.00
43							Y:	3.00	1.27	0.50	-	-	0.50	1.27	3.00
RWGW	0.035	0.015	0.035	5,280.00	0.0047	-	X:	-	-	67.00	67.00	332.00	332.00	399.00	399.00
51							Y:	3.00	1.17	0.50	-	-	0.50	1.17	3.00
RWGW	0.035	0.015	0.035	5,280.00	0.0033	-	X:	-	-	68.50	68.50	359.50	359.50	428.00	428.00
59							Y:	3.00	1.18	0.50	-	-	0.50	1.18	3.00
RWGW	0.035	0.015	0.035	5,280.00	0.0025	-	X:	-	-	61.50	61.50	316.50	316.50	378.00	378.00
67							Y:	3.00	1.12	0.50	-	-	0.50	1.12	3.00
RWL59	0.045	0.035	0.045	8,099.00	0.0061	-	X:	-	-	40.00	50.00	60.00	70.00	110.00	110.00
							Y:	6.20	5.20	5.00	-	-	5.00	5.20	6.20
RWL67	0.035	0.015	0.035	1,195.00	0.0014	-	X:	-	-	20.50	20.50	89.50	89.50	110.00	110.00
							Y:	3.00	0.70	0.50	-	-	0.50	0.70	3.00
RWL75	0.035	0.015	0.035	5,062.00	0.0072	-	X:	-	-	7.00	7.00	43.00	43.00	50.00	50.00
A							Y:	3.00	0.57	0.50	-	-	0.50	0.57	3.00
RWL75	0.035	0.015	0.035	2,577.00	0.0049	-	X:	-	-	7.00	7.00	43.00	43.00	50.00	50.00
B							Y:	3.00	0.57	0.50	-	-	0.50	0.57	3.00
RWL83	0.045	0.035	0.045	3,222.00	0.0050	-	X:	-	-	19.00	25.00	30.00	36.00	55.00	55.00
							Y:	4.10	3.10	3.00	-	-	3.00	3.10	4.10
RWLNR	0.045	0.035	0.045	3,822.00	0.0048	-	X:	-	256.00	372.00	397.00	407.00	419.00	464.00	800.00
							Y:	12.00	10.00	8.00	-	-	6.00	8.00	12.00
RWPE4	0.035	0.015	0.035	5,280.00	0.0030	-	X:	-	-	105.00	105.00	494.00	494.00	599.00	599.00
3							Y:	3.00	1.55	0.50	-	-	0.50	1.55	3.00
RWTB4	0.035	0.015	0.035	5,280.00	0.0037	-	X:	-	-	95.50	95.50	453.50	453.50	549.00	549.00
3							Y:	3.00	1.46	0.50	-	-	0.50	1.46	3.00
RWTB5	0.035	0.015	0.035	5,280.00	0.0037	-	X:	-	-	76.50	76.50	372.50	372.50	449.00	449.00
1							Y:	3.00	1.27	0.50	-	-	0.50	1.27	3.00
RWTB5	0.035	0.015	0.035	5,280.00	0.0032	-	X:	-	-	37.50	37.50	210.50	210.50	248.00	248.00
9							Y:	3.00	0.88	0.50	-	-	0.50	0.88	3.00

Route ID	LOB N	Chan N	ROB N	Length (ft)	Slope (ft/ft)	Max Elev (ft)		1.	2.	3.	4.	5.	6.	7.	8.
RWUH4	0.035	0.015	0.035	5,280.00	0.0041	-	X:	-	-	67.00	67.00	332.00	332.00	399.00	399.00
3							Y:	3.00	1.17	0.50	-	-	0.50	1.17	3.00
RWUH5	0.035	0.015	0.035	5,280.00	0.0037	-	X:	-	-	76.50	76.50	372.50	372.50	449.00	449.00
1							Y:	3.00	1.27	0.50	-	-	0.50	1.27	3.00
RWWR	0.045	0.035	0.045	2,599.00	0.0063	-	X:	-	-	19.00	25.00	30.00	36.00	55.00	55.00
S							Y:	4.10	3.10	3.00	-	-	3.00	3.10	4.10

Kimley-Horn and Associates, Inc.

Project: ***Glendale Stormwater Management Plan***
Subject: **Storm Drain Route Parameters**
Model: **Glendale/Peoria**
Designed by: **ZRS** Date 9/14/2010
Checked by: **MAF** Date 9/15/2010

KHA Project No. 091910009
City of Glendale No. 089017

Objective: To determine the storm drain route parameters, namely diameter, slope and length

Storm Drain Routing Reaches

Pipe Route ID	E/W Street Name	N/S Street Name	City	Storm Drain Diameter No. 1	Storm Drain Diameter No. 2	Length	Slope	Storm Drain Capacity No. 1	Storm Drain Capacity No. 2	Combined Storm Drain Capacity	Combined Storm Drain Diameter*
RP59GW	Bell Road	59th Avenue	Glendale	54	---	4995	0.0030	108	---	108	---
RP59AM	Greenway Road	59th Avenue	Glendale	78	---	2519	0.0027	273	---	273	---
RP59TB	Acoma Drive	59th Avenue	Glendale	60	---	2759	0.0027	135	---	135	---
RP67GW	Bell Road	67th Avenue	Glendale	36	---	5072	0.0023	32	---	32	---
RP67AC	Greenway Road	67th Avenue	Glendale	84	---	1168	0.0090	608	---	608	---
RPSK67	Union Hills Drive	59th Avenue	Glendale	24	---	6044	0.0020	10	---	10	---
RPGWLO	Bell Road	Loop 101	Glendale	84	---	2236	0.0007	169	---	169	---
RPPP87	Pinnacle Peak Road	91st Avenue	Peoria	54	---	2635	0.0020	88	---	88	---
RP87PP	Avenida Del Sol	87th Avenue	Peoria	48	---	1251	0.0079	128	---	128	---
RPPP83	Pinnacle Peak Road	87th Avenue	Peoria	72	---	1891	0.0009	127	---	127	---
RP83WL	Pinnacle Peak Road	83rd Avenue	Peoria	36	---	2980	0.0022	31	---	31	---
RPUHNR	Union Hills Drive	87th Avenue	Peoria	42	---	1703	0.0025	50	---	50	---
RP91AT	Union Hills Drive	91st Avenue	Peoria	54	78	1467	0.0043	129	454	583	96
RP91BL	Athens Street	91st Avenue	Peoria	78	---	3333	0.0035	311	---	311	---
RPBLNR	Bell Road	91st Avenue	Peoria	72	---	1896	0.0014	159	---	159	---
RPUH43	Union Hills Drive	35th Avenue	Phoenix	114	---	5324	0.0037	875	---	875	---
RP35GW	Bell Road	35th Avenue	Phoenix	60	---	5260	0.0037	158	---	158	---
RP35TB	Greenway Road	35th Avenue	Phoenix	78	---	5252	0.0037	318	---	318	---
RP35CT	Thunderbird Road	35th Avenue	Phoenix	96	---	5200	0.0037	554	---	554	---
RP35PE	Cactus Road	35th Avenue	Phoenix	96	---	5256	0.0037	554	---	554	---
RP35AC	Peoria Avenue	35th Avenue	Phoenix	90	---	3523	0.0037	466	---	466	---
RPUH51	Union Hills Drive	43rd Avenue	Phoenix	132	---	5152	0.0035	1268	---	1268	---
RP43GW	Bell Road	43rd Avenue	Phoenix	54	---	5150	0.0035	117	---	117	---
RP43TB	Greenway Road	43rd Avenue	Phoenix	60	---	5245	0.0035	155	---	155	---
RP43CT	Thunderbird Road	43rd Avenue	Phoenix	78	---	5194	0.0035	312	---	312	---
RP43PE	Cactus Road	43rd Avenue	Phoenix	84	---	4928	0.0035	380	---	380	---
RP51GW	Bell Road	51st Avenue	Phoenix	36	---	4986	0.0033	38	---	38	---
RP51TB	Greenway Road	51st Avenue	Phoenix	60	---	5283	0.0033	150	---	150	---
RP51CT	Thunderbird Road	51st Avenue	Phoenix	72	---	5189	0.0033	244	---	244	---

*From Flowmaster Calculations

Kimley-Horn and Associates, Inc.

Project: ***Glendale Stormwater Management Plan***
Subject: **Routing Reach Parameters - Channels**
Model: **Glendale/Peoria**
Designed by: **MAF** Date 11/18/2009
Checked by: **AOM** Date 1/18/2010

KHA Project No. 091910009
City of Glendale No. 089017

Objective: To determine the channel routing reach parameters that will be entered into the HEC-1 model, namely: length, slope, and the RX and RY values

Routing Flows within Channels

Routing ID[1]	E/W Boundary Name[2]	N/S Boundary Name[2]	Length (ft)	USGE[3] (ft)	DSGE[3] (ft)	Slope (ft/ft)	Channel N value	Channel Section[4]	RX[5]								RY[5]							
									X1	X2	X3	X4	X5	X6	X7	X8	Y1	Y2	Y3	Y4	Y5	Y6	Y7	Y8
RGHNR	Glen Harbor Boulevard	New River	7,516	1,064	1,030	0.0045	0.035	S	0	0	19	25	30	36	55	55	4.1	3.1	3	0	0	3	3.1	4.1
RGLAF	Glendale Avenue	Agua Fria River	3,487	1,054	1,046	0.0023	0.035	L	0	0	55	75	100	120	175	175	11.2	10.2	10	0	0	10	10.2	11.2
RGL14A	Glendale Avenue	114th Avenue	7,959	1,066	1,060	0.0008	0.035	L	0	0	55	75	100	120	175	175	11.2	10.2	10	0	0	10	10.2	11.2
RGL14B	Glendale Avenue	114th Avenue	4,950	1,070	1,060	0.0021	0.035	M	0	0	40	50	60	70	110	110	6.2	5.2	5	0	0	5	5.2	6.2
RNO11	Northern Avenue	111th Avenue	6,339	1,102	1,066	0.0057	0.02	S	0	0	19	25	30	36	55	55	4.1	3.1	3	0	0	3	3.1	4.1
ROL99B	Olive Avenue	99th Avenue	1,627	1,100	1,080	0.0124	0.015	M	0	0	40	50	60	70	110	110	6.2	5.2	5	0	0	5	5.2	6.2
ROL03A	Olive Avenue	103rd Avenue	7,132	1,118	1,100	0.0024	0.015	M	0	0	40	50	60	70	110	110	6.2	5.2	5	0	0	5	5.2	6.2
RGR99A	Grand Avenue	99th Avenue	12,358	1,171	1,140	0.0025	0.02	M	0	0	40	50	60	70	110	110	6.2	5.2	5	0	0	5	5.2	6.2
RGR99B	Grand Avenue	99th Avenue	1,046	1,140	1,134	0.0060	0.015	S	0	0	19	25	30	36	55	55	4.1	3.1	3	0	0	3	3.1	4.1
RGRNRA	Grand Avenue	New River	6,205	1,151	1,124	0.0045	0.015	L	0	0	55	75	100	120	175	175	11.2	10.2	10	0	0	10	10.2	11.2
RGRNRB	Grand Avenue	New River	3,071	1,134	1,118	0.0051	0.015	L	0	0	55	75	100	120	175	175	11.2	10.2	10	0	0	10	10.2	11.2
RTB99	Thunderbird Road	99th Avenue	6,842	1,178	1,151	0.0039	0.015	M	0	0	40	50	60	70	110	110	6.2	5.2	5	0	0	5	5.2	6.2
RBN99	Burns Drive	99th Avenue	3,854	1,200	1,180	0.0052	0.015	M	0	0	40	50	60	70	110	110	6.2	5.2	5	0	0	5	5.2	6.2
RBL75A	Bell Road	75th Avenue	4,730	1,229	1,212	0.0037	0.035	S	0	0	19	25	30	36	55	55	4.1	3.1	3	0	0	3	3.1	4.1
RBL15A	Bell Road	115th Avenue	6,041	1,210	1,160	0.0082	0.015	M	0	0	40	50	60	70	110	110	6.2	5.2	5	0	0	5	5.2	6.2
RBL15B	Bell Road	115th Avenue	4,894	1,170	1,160	0.0020	0.035	115	0	100	112	147	159	179	214	580	8	6	0	0	6	7	7	9
RDW99A	Del Webb Boulevard	99th Avenue	2,292	1,220	1,213	0.0029	0.015	M	0	0	40	50	60	70	110	110	6.2	5.2	5	0	0	5	5.2	6.2
RDW99B	Del Webb Boulevard	99th Avenue	2,848	1,223	1,213	0.0034	0.035	S	0	0	19	25	30	36	55	55	4.1	3.1	3	0	0	3	3.1	4.1
RDW07	Del Webb Boulevard	107th Avenue	4,743	1,213	1,210	0.0007	0.015	M	0	0	40	50	60	70	110	110	6.2	5.2	5	0	0	5	5.2	6.2
RUHSKA	Union Hills Drive	Skunk Creek	4,440	1,285	1,270	0.0034	0.035	L	0	0	55	75	100	120	175	175	11.2	10.2	10	0	0	10	10.2	11.2
RUH75	Union Hills Drive	75th Avenue	7,047	1,244	1,229	0.0021	0.035	S	0	0	19	25	30	36	55	55	4.1	3.1	3	0	0	3	3.1	4.1
RUH87	Union Hills Drive	87th Avenue	6,701	1,250	1,226	0.0037	0.035	M	0	0	40	50	60	70	110	110	6.2	5.2	5	0	0	5	5.2	6.2
RUH91	Union Hills Drive	91st Avenue	9,978	1,248	1,221	0.0027	0.035	S	0	0	19	25	30	36	55	55	4.1	3.1	3	0	0	3	3.1	4.1
RUH99	Union Hills Drive	99th Avenue	5,347	1,243	1,220	0.0042	0.015	S	0	0	19	25	30	36	55	55	4.1	3.1	3	0	0	3	3.1	4.1
RUH11	Union Hills Drive	111th Avenue	2,740	1,226	1,201	0.0090	0.02	UH_C	0	1	13	23	53	83	108	109	14	6	0	0	6	6	7	15
RUH15	Union Hills Drive	115th Avenue	2,598	1,201	1,170	0.0120	0.035	UH_A	0	50	62	72	84	104	139	640	9	6	0	0	6	7	7	9
RBYNRA	Beardsley Road	New River	6,713	1,280	1,240	0.0060	0.035	S	0	0	19	25	30	36	55	55	4.1	3.1	3	0	0	3	3.1	4.1
RBYNRB	Beardsley Road	New River	3,176	1,258	1,240	0.0058	0.015	LO	0	3	5	29	41	65	67	70	13	12	12	0	0	12	12	13
RBY87	Beardsley Road	87th Avenue	6,699	1,278	1,248	0.0045	0.035	L	0	0	55	75	100	120	175	175	11.2	10.2	10	0	0	10	10.2	11.2
RBY91	Beardsley Road	91st Avenue	2,901	1,260	1,248	0.0041	0.035	S	0	0	19	25	30	36	55	55	4.1	3.1	3	0	0	3	3.1	4.1
RBY99	Beardsley Road	99th Avenue	3,939	1,258	1,242	0.0041	0.035	BY	0	1	16	36	51	123	148	648	16	8	0	0	8	8	9	11
RBY07	Beardsley Road	107th Avenue	3,085	1,242	1,236	0.0019	0.02	BY	0	1	16	36	51	123	148	648	16	8	0	0	8	8	9	11
RBYAF	Beardsley Road	Agua Fria River	8,144	1,236	1,183	0.0065	0.035	S	0	0	19	25	30	36	55	55	4.1	3.1	3	0	0	3	3.1	4.1
RRG93	Rose Garden Lane	93rd Avenue	4,406	1,280	1,264	0.0036	0.015	S	0	0	19	25	30	36	55	55	4.1	3.1	3	0	0	3	3.1	4.1
RRGLPA	Rose Garden Lane	Lake Pleasant Boulevard	2,633	1,276	1,263	0.0048	0.02	M	0	0	40	50	60	70	110	110	6.2	5.2	5	0	0	5	5.2	6.2
RRGLPB	Rose Garden Lane	Lake Pleasant Boulevard	3,160	1,264	1,263	0.0003	0.02	S	0	0	19	25	30	36	55	55	4.1	3.1	3	0	0	3	3.1	4.1
RRG07A	Rose Garden Lane	107th Avenue	2,573	1,246	1,239	0.0027	0.015	S	0	0	19	25	30	36	55	55	4.1	3.1	3	0	0	3	3.1	4.1
RRG07B	Rose Garden Lane	107th Avenue	5,903	1,271	1,236	0.0059	0.02	M	0	0	40	50	60	70	110	110	6.2	5.2	5	0	0	5	5.2	6.2
RRG07C	Rose Garden Lane	107th Avenue	4,816	1,263	1,236	0.0056	0.02	M	0	0	40	50	60	70	110	110	6.2	5.2	5	0	0	5	5.2	6.2
RRGAF	Rose Garden Lane	Agua Fria River	4,328	1,236	1,200	0.0083	0.02	M	0	0	40	50	60	70	110	110	6.2	5.2	5	0	0	5	5.2	6.2
RDV83	Deer Valley Road	83rd Avenue	2,933	1,295	1,280	0.0051	0.015	M	0	0	40	50	60	70	110	110	6.2	5.2	5	0	0	5	5.2	6.2
RDVLP	Deer Valley Road	Lake Pleasant Boulevard	5,616	1,304	1,271	0.0059	0.035	S	0	0	19	25	30	36	55	55	4.1	3.1	3	0	0	3	3.1	4.1

Kimley-Horn and Associates, Inc.

Project: ***Glendale Stormwater Management Plan***
Subject: **Routing Reach Parameters - Channels**
Model: **Glendale/Peoria**
Designed by: **MAF** Date 11/18/2009
Checked by: **AOM** Date 1/18/2010

KHA Project No. 091910009
City of Glendale No. 089017

Objective: To determine the channel routing reach parameters that will be entered into the HEC-1 model, namely: length, slope, and the RX and RY values

Routing Flows within Channels

Routing ID[1]	E/W Boundary Name[2]	N/S Boundary Name[2]	Length (ft)	USGE[3] (ft)	DSGE[3] (ft)	Slope (ft/ft)	Channel N value	Channel Section[4]	RX[5] X1	X2	X3	X4	X5	X6	X7	X8	RY[5] Y1	Y2	Y3	Y4	Y5	Y6	Y7	Y8
RDVNR	Deer Valley Road	New River	2,707	1,280	1,276	0.0015	0.015	S	0	0	19	25	30	36	55	55	4.1	3.1	3	0	0	3	3.1	4.1
RDVAF	Deer Valley Road	Agua Fria River	3,702	1,260	1,210	0.0135	0.035	S	0	0	19	25	30	36	55	55	4.1	3.1	3	0	0	3	3.1	4.1
RDV07	Deer Valley Road	107th Avenue	6,455	1,292	1,246	0.0071	0.035	M	0	0	40	50	60	70	110	110	6.2	5.2	5	0	0	5	5.2	6.2
RWLNR	Williams Road	New River	3,822	1,306	1,287	0.0048	0.035	RS_A	0	256	372	397	407	419	464	800	12	10	8	0	0	6	8	12
RWL83	Williams Road	83rd Avenue	3,222	1,311	1,295	0.0050	0.035	S	0	0	19	25	30	36	55	55	4.1	3.1	3	0	0	3	3.1	4.1
RWL59	Williams Road	59th Avenue	8,099	1,363	1,313	0.0061	0.035	M	0	0	40	50	60	70	110	110	6.2	5.2	5	0	0	5	5.2	6.2
RPPNR	Pinnacle Peak Road	New River	1,225	1,312	1,306	0.0052	0.02	M	0	0	40	50	60	70	110	110	6.2	5.2	5	0	0	5	5.2	6.2
RPP73A	Pinnacle Peak Road	73rd Avenue	5,599	1,351	1,325	0.0045	0.035	M	0	0	40	50	60	70	110	110	6.2	5.2	5	0	0	5	5.2	6.2
RPP77	Pinnacle Peak Road	77th Avenue	2,947	1,318	1,306	0.0041	0.035	RS_B	0	480	500	518	544	609	900	1121	11	10	0	0.2	10	11	12	13
RPP87	Pinnacle Peak Road	87th Avenue	5,446	1,405	1,312	0.0172	0.02	M	0	0	40	50	60	70	110	110	6.2	5.2	5	0	0	5	5.2	6.2
RPP03A	Pinnacle Peak Road	103rd Avenue	2,970	1,317	1,300	0.0057	0.035	S	0	0	19	25	30	36	55	55	4.1	3.1	3	0	0	3	3.1	4.1
RPP07	Pinnacle Peak Road	107th Avenue	2,508	1,292	1,260	0.0128	0.035	S	0	0	19	25	30	36	55	55	4.1	3.1	3	0	0	3	3.1	4.1
RCL67	Calle Lejos	67th Avenue	3,990	1,381	1,351	0.0076	0.035	M	0	0	40	50	60	70	110	110	6.2	5.2	5	0	0	5	5.2	6.2
RCL77A	Calle Lejos	77th Avenue	3,884	1,361	1,318	0.0111	0.035	S	0	0	19	25	30	36	55	55	4.1	3.1	3	0	0	3	3.1	4.1
RCL77B	Calle Lejos	77th Avenue	2,864	1,334	1,318	0.0057	0.035	RS_B	0	480	500	518	544	609	900	1121	11	10	0	0.2	10	11	12	13
RCL07	Calle Lejos	107th Avenue	5,019	1,320	1,260	0.0120	0.035	L	0	0	55	75	100	120	175	175	11.2	10.2	10	0	0	10	10.2	11.2
RCLAFA	Calle Lejos	Agua Fria River	2,211	1,252	1,242	0.0045	0.02	M	0	0	40	50	60	70	110	110	6.2	5.2	5	0	0	5	5.2	6.2
RCLAFB	Calle Lejos	Agua Fria River	2,215	1,242	1,232	0.0045	0.035	S	0	0	19	25	30	36	55	55	4.1	3.1	3	0	0	3	3.1	4.1
RHV75	Happy Valley Road	75th Avenue	7,197	1,417	1,345	0.0099	0.02	M	0	0	40	50	60	70	110	110	6.2	5.2	5	0	0	5	5.2	6.2
RHVRSA	Happy Valley Road	Rock Springs Wash	6,390	1,379	1,334	0.0071	0.035	M	0	0	40	50	60	70	110	110	6.2	5.2	5	0	0	5	5.2	6.2
RHVRSB	Happy Valley Road	Rock Springs Wash	5,791	1,364	1,334	0.0051	0.035	S	0	0	19	25	30	36	55	55	4.1	3.1	3	0	0	3	3.1	4.1
RHVLP	Happy Valley Road	Lake Pleasant Boulevard	4,021	1,362	1,341	0.0052	0.02	S	0	0	19	25	30	36	55	55	4.1	3.1	3	0	0	3	3.1	4.1
RHV01A	Happy Valley Road	101st Avenue	5,774	1,374	1,320	0.0093	0.035	L	0	0	55	75	100	120	175	175	11.2	10.2	10	0	0	10	10.2	11.2
RHV01B	Happy Valley Road	101st Avenue	2,017	1,342	1,320	0.0107	0.035	M	0	0	40	50	60	70	110	110	6.2	5.2	5	0	0	5	5.2	6.2
RHV01C	Happy Valley Road	101st Avenue	1,200	1,341	1,320	0.0174	0.02	M	0	0	40	50	60	70	110	110	6.2	5.2	5	0	0	5	5.2	6.2
RHVAF	Happy Valley Road	Agua Fria River	2,397	1,250	1,247	0.0013	0.02	S	0	0	19	25	30	36	55	55	4.1	3.1	3	0	0	3	3.1	4.1
RCL57	Calle Lejos	57th Avenue	5,676	1,414	1,370	0.0078	0.035	M	0	0	40	50	60	70	110	110	6.2	5.2	5	0	0	5	5.2	6.2
RMEAF	Meade Drive	Agua Fria River	5,783	1,160	1,130	0.0053	0.02	M	0	0	40	50	60	70	110	110	6.2	5.2	5	0	0	5	5.2	6.2
RJM67	Jomax Road	67th Avenue	4,129	1,451	1,420	0.0076	0.02	S	0	0	19	25	30	36	55	55	4.1	3.1	3	0	0	3	3.1	4.1
RJMRS	Jomax Road	Rock Springs Wash	4,005	1,388	1,364	0.0060	0.035	M	0	0	40	50	60	70	110	110	6.2	5.2	5	0	0	5	5.2	6.2
RJMLP	Jomax Road	Lake Pleasant Boulevard	5,973	1,424	1,374	0.0084	0.035	M	0	0	40	50	60	70	110	110	6.2	5.2	5	0	0	5	5.2	6.2
RWWRS	Westwing Parkway	Rock Springs Wash	2,599	1,405	1,388	0.0063	0.035	S	0	0	19	25	30	36	55	55	4.1	3.1	3	0	0	3	3.1	4.1
RGWNRA	Greenway Road	New River	6,001	1,172	1,166	0.0010	0.015	M	0	0	40	50	60	70	110	110	6.2	5.2	5	0	0	5	5.2	6.2

Notes:

1. The Routing ID corresponds to the KK card in HEC-1.
2. Names correspond to streets or watercourses downstream of Routing ID.
3. Elevation data was obtained from the Flood Control District of Maricopa County and represents either 2-ft or 10-ft topo data.
4. For this study four generic typical channel sections were used along with various typical sections for certain major channels or watercourses. The generic typical sections include: small, medium, large, and extra large.
5. The RX and RY represent the 8-point cross section used in the Normal Depth routing method from HEC-1.

Kimley-Horn and Associates, Inc.

Project: ***Glendale Stormwater Management Plan***
Subject: **Routing Reach Parameters - Channels**
Model: **Glendale/Peoria**
Designed by: **MAF** Date 11/18/2009
Checked by: **AOM** Date 1/18/2010

KHA Project No. 091910009
City of Glendale No. 089017

Objective: To determine the channel routing reach parameters that will be entered into the HEC-1 model, namely: length, slope, and the RX and RY values

Future Routing Flows within Pinnacle Peak Channel

Routing ID[1]	E/W Boundary Name[2]	N/S Boundary Name[2]	Existing Id[3]	NWRU ID[4]	Channel N value	Overbank N value	Length (ft)	Slope (ft/ft)	RX[5]								RY[5]							
									X1	X2	X3	X4	X5	X6	X7	X8	Y1	Y2	Y3	Y4	Y5	Y6	Y7	Y8
RPPLP	Pinnacle Peak Road	Lake Pleasant Boulevard	RDV91	RN11KW	0.04	0.04	5844	0.0020	0	100	140	160	200	300	400	500	10	9	0	0	9	10	11	12
RPP03B	Pinnacle Peak Road	103rd Avenue	RPP03B	RA09OW	0.04	0.04	1960	0.0072	0	100	140	160	200	300	400	500	10	9	0	0	9	10	11	12
RPP07	Pinnacle Peak Road	107th Avenue	RPP07	RA09QW	0.05	0.05	2468	0.0158	0	100	140	160	200	300	400	500	10	9	0	0	9	10	11	12
RPPAF	Pinnacle Peak Road	Agua Fria River	RDVAF	RA10A	0.05	0.05	1553	0.03	0	100	140	170	210	310	410	510	10	9	0	0	9	10	11	12

Notes:
1. The Routing ID corresponds to the KK card in HEC-1.
2. Names correspond to streets or watercourses downstream of Routing ID.
3. The ID from the existing model that will be replaced by the Pinnacle Peak route.
4. Several routes from the Glendale/Peoria Northwest Region Update (NWRU) may represent a single route in this future model. The ID is the most upstream route in the NWRU. All the parameters from the Pinnacle Peak Channel were taken from the NWRU.
5. The RX and RY represent the 8-point cross section used in the Normal Depth routing method from HEC-1.

Kimley-Horn and Associates, Inc.

Project: ***Glendale Stormwater Management Plan***
Subject: **Routing Reach Parameters - Streets**
Model: **Glendale/Peoria**
Designed by: **MAF** Date 11/6/2009
Checked by: **AOM** Date 1/18/2010

KHA Project No. 091910009
City of Glendale No. 089017

Objective: To determine the street routing reach parameters that will be entered into the HEC-1 model, namely: length, slope, and the RX and RY values

Composite Street Routing Flows in the South Direction

Routing ID[1]	E/W Boundary Name[2]	N/S Boundary Name[2]	Length (ft)	USGE[3] (ft)	DSGE[3] (ft)	Slope (ft/ft)	City	Number or Type of Streets[4]			Width (ft)				RX								RY							
								Arterial[5]	Collector[6]	Local	Channel[7]	LOB[8]	ROB[8]	Total[9]	X1	X2	X3	X4	X5	X6	X7	X8	Y1	Y2	Y3	Y4	Y5	Y6	Y7	Y8
RSBL35	Bell Road	35th Avenue	5,280	1,330.13	1,314.17	0.0030	Phoenix	1	1	5	296	77	77	449	0	0	76.5	76.5	372.5	372.5	449	449	3	1.3	0.5	0	0	0.5	1.3	3
RSBL43	Bell Road	43rd Avenue	5,280	1,308.52	1,289.11	0.0037	Phoenix	1	1	2	203	48	48	299	0	0	48	48	251	251	299	299	3	1.0	0.5	0	0	0.5	1.0	3
RSBL51	Bell Road	51st Avenue	5,280	1,288.99	1,268.04	0.0040	Phoenix	1	1	2	203	48	48	299	0	0	48	48	251	251	299	299	3	1.0	0.5	0	0	0.5	1.0	3
RSGW35	Greenway Road	35th Avenue	5,280	1,314.18	1,292.35	0.0041	Phoenix	1	0	3	184	45	45	274	0	0	45	45	229	229	274	274	3	1.0	0.5	0	0	0.5	1.0	3
RSGW43	Greenway Road	43rd Avenue	5,280	1,289.11	1,274.50	0.0028	Phoenix	1	1	3	234	58	58	349	0	0	57.5	57.5	291.5	291.5	349	349	3	1.1	0.5	0	0	0.5	1.1	3
RSGW51	Greenway Road	51st Avenue	5,280	1,268.04	1,249.46	0.0035	Phoenix	1	1	2	203	48	48	299	0	0	48	48	251	251	299	299	3	1.0	0.5	0	0	0.5	1.0	3
RSGW59	Greenway Road	59th Avenue	5,280	1,251.61	1,231.80	0.0038	Glendale	A-4	0	3	203	39	39	280	0	0	38.5	38.5	241.5	241.5	280	280	3	0.9	0.5	0	0	0.5	0.9	3
RSGW67	Greenway Road	67th Avenue	5,280	1,232.19	1,218.73	0.0025	Glendale	A-4	1	2	209	45	45	298	0	0	44.5	44.5	253.5	253.5	298	298	3	0.9	0.5	0	0	0.5	0.9	3
RSTB35	Thunderbird Road	35th Avenue	5,280	1,292.35	1,273.76	0.0035	Phoenix	1	0	4	215	55	55	324	0	0	54.5	54.5	269.5	269.5	324	324	3	1.0	0.5	0	0	0.5	1.0	3
RSTB43	Thunderbird Road	43rd Avenue	5,280	1,274.50	1,254.36	0.0038	Phoenix	1	1	4	265	67	67	399	0	0	67	67	332	332	399	399	3	1.2	0.5	0	0	0.5	1.2	3
RSTB51	Thunderbird Road	51st Avenue	5,280	1,249.46	1,234.96	0.0027	Phoenix	1	1	1	172	39	39	249	0	0	38.5	38.5	210.5	210.5	249	249	3	0.9	0.5	0	0	0.5	0.9	3
RSTB59	Thunderbird Road	59th Avenue	5,280	1,231.80	1,218.28	0.0026	Glendale	A-4	1	5	317	66	66	448	0	0	65.5	65.5	382.5	382.5	448	448	3	1.2	0.5	0	0	0.5	1.2	3
RSCT35	Cactus Road	35th Avenue	5,280	1,273.23	1,253.98	0.0036	Phoenix	1	1	6	327	86	86	499	0	0	86	86	413	413	499	499	3	1.4	0.5	0	0	0.5	1.4	3
RSCT43	Cactus Road	43rd Avenue	5,280	1,254.35	1,238.62	0.0030	Phoenix	1	1	2	203	48	48	299	0	0	48	48	251	251	299	299	3	1.0	0.5	0	0	0.5	1.0	3
RSCT51	Cactus Road	51st Avenue	5,280	1,235.39	1,221.48	0.0026	Phoenix	1	0	1	122	26	26	174	0	0	26	26	148	148	174	174	3	0.8	0.5	0	0	0.5	0.8	3
RSPE35	Peoria Avenue	35th Avenue	5,280	1,253.98	1,241.79	0.0023	Phoenix	1	1	4	265	67	67	399	0	0	67	67	332	332	399	399	3	1.2	0.5	0	0	0.5	1.2	3
RSPE43	Peoria Avenue	43rd Avenue	5,280	1,238.62	1,225.71	0.0024	Phoenix	1	1	2	203	48	48	299	0	0	48	48	251	251	299	299	3	1.0	0.5	0	0	0.5	1.0	3
RSAC35	ACDC	35th Avenue	3,447	1,241.22	1,227.10	0.0041	Phoenix	0	1	3	143	41	41	225	0	0	41	41	184	184	225	225	3	0.9	0.5	0	0	0.5	0.9	3
RSAC67	ACDC	67th Avenue	1,216	1,218.73	1,216.35	0.0020	Glendale	0	1	3	150	34	34	218	0	0	34	34	184	184	218	218	3	0.8	0.5	0	0	0.5	0.8	3
ROL99A	Olive Avenue	99th Avenue	5,677	1,119.42	1,098.00	0.0038	County	1	0	0	91	17	17	124	0	0	16.5	16.5	107.5	107.5	124	124	3	0.7	0.5	0	0	0.5	0.7	3
RSK67	Skunk Creek	67th Avenue	5,113	1,257.85	1,239.00	0.0037	Glendale	A-1	1	5	291	69	69	428	0	0	68.5	68.5	359.5	359.5	428	428	3	1.2	0.5	0	0	0.5	1.2	3
RBL91	Bell Road	91st Avenue	5,280	1,220.64	1,196.96	0.0045	Peoria	1	1	1	172	39	39	249	0	0	38.5	38.5	210.5	210.5	249	249	3	0.9	0.5	0	0	0.5	0.9	3

Notes:

1. The Routing ID corresponds to the KK card in HEC-1.
2. Streets correspond to streets downstream of Routing ID.
3. Elevation data was obtained from the Flood Control District of Maricopa County and represents either 2-ft or 10-ft topo data.
4. For this study Arterial streets represent the mile streets, Collector streets represent the half-mile streets, and Local Streets are all other streets.
5. Streets within the City of Glendale are based on Glendale typical sections. Streets outside of Glendale are based on average street sections from the Cities of Peoria and Phoenix. Glendale arterial street typical section was selected based on City of Glendale Detail G-300.
6. The City of Glendale has several typical details for a collector street that are very similar. An average City of Glendale section was used for collector streets within Glendale. Collector streets outside of Glendal are based on average street sections from the Cities of Peoria and Phoenix.
7. The width of the channel is based on a composite street width from the typical details.
8. The left overbank and right overbank are based on composite street widths. The overbanks were calculated by subtracting the channel width from the right-of-way.
9. The total width is the composite right-of-way width for the street sections based on the typical details.
10. The RX and RY represent the 8-point cross section used in the Normal Depth routing method from HEC-1.
    Curb heights were assumed to be 0.5 ft and a slope of 1% was used from the curb to the limits of the right-of-way.

Kimley-Horn and Associates, Inc.

Project: ***Glendale Stormwater Management Plan***
Subject: **Routing Reach Parameters - Streets**
Model: **Glendale/Peoria**
Designed by: **MAF** Date 11/6/2009
Checked by: **AOM** Date 1/18/2010

KHA Project No. 091910009
City of Glendale No. 089017

Objective: To determine the street routing reach parameters that will be entered into the HEC-1 model, namely: length, slope, and the RX and RY values

Composite Street Routing Flows in the West Direction

Routing ID[1]	E/W Boundary Name[2]	N/S Boundary Name[2]	Length (ft)	USGE[3] (ft)	DSGE[3] (ft)	Slope (ft/ft)	City	Number or Type of Streets[4]			Width (ft)				RX								RY							
								Arterial[5]	Collector[6]	Local	Channel[7]	LOB[8]	ROB[8]	Total[9]	X1	X2	X3	X4	X5	X6	X7	X8	Y1	Y2	Y3	Y4	Y5	Y6	Y7	Y8
RWUH43	Union Hills Drive	43rd Avenue	5,280	1,330.13	1,308.52	0.0041	Phoenix	1	1	4	265	67	67	399	0	0	67	67	332	332	399	399	3	1.2	0.5	0	0	0.5	1.2	3
RWUH51	Union Hills Drive	51st Avenue	5,280	1,308.52	1,289.00	0.0037	Phoenix	1	1	5	296	77	77	449	0	0	76.5	76.5	372.5	372.5	449	449	3	1.3	0.5	0	0	0.5	1.3	3
RWBL43	Bell Road	43rd Avenue	5,280	1,314.17	1,289.11	0.0047	Phoenix	1	1	6	327	86	86	499	0	0	86	86	413	413	499	499	3	1.4	0.5	0	0	0.5	1.4	3
RWBL51	Bell Road	51st Avenue	5,280	1,289.11	1,268.05	0.0040	Phoenix	1	1	1	172	39	39	249	0	0	38.5	38.5	210.5	210.5	249	249	3	0.9	0.5	0	0	0.5	0.9	3
RWBL59	Bell Road	59th Avenue	5,280	1,268.04	1,251.61	0.0031	Glendale	A-4	1	3	245	52	52	348	0	0	51.5	51.5	296.5	296.5	348	348	3	1.0	0.5	0	0	0.5	1.0	3
RWBL67	Bell Road	67th Avenue	5,280	1,251.61	1,232.19	0.0037	Glendale	A-4	0	0	95	18	18	130	0	0	17.5	17.5	112.5	112.5	130	130	3	0.7	0.5	0	0	0.5	0.7	3
RWGW43	Greenway Road	43rd Avenue	5,280	1,292.35	1,274.50	0.0034	Phoenix	1	1	5	296	77	77	449	0	0	76.5	76.5	372.5	372.5	449	449	3	1.3	0.5	0	0	0.5	1.3	3
RWGW51	Greenway Road	51st Avenue	5,280	1,274.50	1,249.46	0.0047	Phoenix	1	1	4	265	67	67	399	0	0	67	67	332	332	399	399	3	1.2	0.5	0	0	0.5	1.2	3
RWGW59	Greenway Road	59th Avenue	5,280	1,249.46	1,231.80	0.0033	Glendale	A-1	1	5	291	69	69	428	0	0	68.5	68.5	359.5	359.5	428	428	3	1.2	0.5	0	0	0.5	1.2	3
RWGW67	Greenway Road	67th Avenue	5,280	1,231.80	1,218.73	0.0025	Glendale	A-1	1	4	255	62	62	378	0	0	61.5	61.5	316.5	316.5	378	378	3	1.1	0.5	0	0	0.5	1.1	3
RWTB43	Thunderbird Road	43rd Avenue	5,280	1,273.76	1,254.35	0.0037	Phoenix	1	1	7	358	96	96	549	0	0	95.5	95.5	453.5	453.5	549	549	3	1.5	0.5	0	0	0.5	1.5	3
RWTB51	Thunderbird Road	51st Avenue	5,280	1,254.36	1,234.95	0.0037	Phoenix	1	1	5	296	77	77	449	0	0	76.5	76.5	372.5	372.5	449	449	3	1.3	0.5	0	0	0.5	1.3	3
RWTB59	Thunderbird Road	59th Avenue	5,280	1,235.39	1,218.29	0.0032	Glendale	A-4	1	1	173	38	38	248	0	0	37.5	37.5	210.5	210.5	248	248	3	0.9	0.5	0	0	0.5	0.9	3
RWCT43	Cactus Road	43rd Avenue	5,280	1,253.98	1,238.62	0.0029	Phoenix	1	1	6	327	86	86	499	0	0	86	86	413	413	499	499	3	1.4	0.5	0	0	0.5	1.4	3
RWCT51	Cactus Road	51st Avenue	5,280	1,238.62	1,221.48	0.0032	Phoenix	1	1	5	296	77	77	449	0	0	76.5	76.5	372.5	372.5	449	449	3	1.3	0.5	0	0	0.5	1.3	3
RWPE43	Peoria Avenue	43rd Avenue	5,280	1,241.79	1,225.71	0.0030	Phoenix	1	1	8	389	105	105	599	0	0	105	105	494	494	599	599	3	1.6	0.5	0	0	0.5	1.6	3
RWAC67	ACDC	67th Avenue	1,071	1,218.28	1,215.20	0.0029	Glendale	0	0	4	144	28	28	200	0	0	28	28	172	172	200	200	3	0.8	0.5	0	0	0.5	0.8	3
RPE97	Peoria Avenue	97th Avenue	1,508	1,119.42	1,116.00	0.0023	Peoria	1	0	5	246	64	64	374	0	0	64	64	310	310	374	374	3	1.1	0.5	0	0	0.5	1.1	3

Notes:

1. The Routing ID corresponds to the KK card in HEC-1.
2. Streets correspond to streets downstream of Routing ID.
3. Elevation data was obtained from the Flood Control District of Maricopa County and represents either 2-ft or 10-ft topo data.
4. For this study Arterial streets represent the mile streets, Collector streets represent the half-mile streets, and Local Streets are all other streets.
5. Streets within the City of Glendale are based on Glendale typical sections. Streets outside of Glendale are based on average street sections from the Cities of Peoria and Phoenix. Glendale arterial street typical section was selected based on City of Glendale Detail G-300.
6. The City of Glendale has several typical details for a collector street that are very similar. An average City of Glendale section was used for collector streets within Glendale. Collector streets outside of Glendal are based on average street sections from the Cities of Peoria and Phoenix.
7. The width of the channel is based on a composite street width from the typical details.
8. The left overbank and right overbank are based on composite street widths. The overbanks were calculated by subtracting the channel width from the right-of-way.
9. The total width is the composite right-of-way width for the street sections based on the typical details.
10. The RX and RY represent the 8-point cross section used in the Normal Depth routing method from HEC-1.
    Curb heights were assumed to be 0.5 ft and a slope of 1% was used from the curb to the limits of the right-of-way.

Kimley-Horn and Associates, Inc.

Project: ***Glendale Stormwater Management Plan***
Subject: **Routing Reach Parameters - Streets**
Model: **Glendale/Peoria**
Designed by: **MAF** Date 11/6/2009
Checked by: **AOM** Date 1/18/2010

KHA Project No. 091910009
City of Glendale No. 089017

Objective: To determine the street routing reach parameters that will be entered into the HEC-1 model, namely: length, slope, and the RX and RY values

Single Street Routing Flows

								Number or Type of Streets[4]			Width (ft)				RX								RY							
Routing ID[1]	E/W Boundary Name[2]	N/S Boundary Name[2]	Length (ft)	USGE[3] (ft)	DSGE[3] (ft)	Slope (ft/ft)	City	Arterial[5]	Collector[6]	Local	Channel[7]	LOB[8]	ROB[8]	Total[9]	X1	X2	X3	X4	X5	X6	X7	X8	Y1	Y2	Y3	Y4	Y5	Y6	Y7	Y8
RGL11	Glendale Avenue	111th Avenue	5,370	1,092.25	1,070.00	0.0041	Glendale		1		42	13	13	68	0	0	13	13	55	55	68	68	3	0.6	0.5	0	0	0.5	0.6	3
RNONR	Northern Avenue	New River	8,560	1,107.71	1,081.54	0.0031	Peoria		1		50	13	13	75	0	0	12.5	12.5	62.5	62.5	75	75	3	0.6	0.5	0	0	0.5	0.6	3
ROLNR	Olive Avenue	New River	8,150	1,118.00	1,092.53	0.0031	Peoria		1		50	13	13	75	0	0	12.5	12.5	62.5	62.5	75	75	3	0.6	0.5	0	0	0.5	0.6	3
ROL03B	Olive Avenue	103rd Avenue	6,517	1,117.08	1,100.11	0.0026	County			1	31	10	10	50	0	0	9.5	9.5	40.5	40.5	50	50	3	0.6	0.5	0	0	0.5	0.6	3
ROL03C	Olive Avenue	103rd Avenue	5,865	1,117.79	1,100.11	0.0030	County		1		50	13	13	75	0	0	12.5	12.5	62.5	62.5	75	75	3	0.6	0.5	0	0	0.5	0.6	3
RTBNR	Thunderbird Road	New River	6,342	1,175.90	1,156.00	0.0031	Peoria	1			91	17	17	124	0	0	16.5	16.5	107.5	107.5	124	124	3	0.7	0.5	0	0	0.5	0.7	3
RTL07	Talisman	107th Avenue	8,131	1,210.00	1,170.69	0.0048	County	1			91	17	17	124	0	0	16.5	16.5	107.5	107.5	124	124	3	0.7	0.5	0	0	0.5	0.7	3
RGWLO	Greenway Road	Loop 101	6,833	1,202.00	1,157.07	0.0066	Peoria	1			91	17	17	124	0	0	16.5	16.5	107.5	107.5	124	124	3	0.7	0.5	0	0	0.5	0.7	3
RGW91	Greenway Road	91st Avenue	5,450	1,196.96	1,175.90	0.0039	Peoria	1			91	17	17	124	0	0	16.5	16.5	107.5	107.5	124	124	3	0.7	0.5	0	0	0.5	0.7	3
RGWNRB	Greenway Road	New River	9,106	1,200.32	1,174.00	0.0029	Peoria		1		50	13	13	75	0	0	12.5	12.5	62.5	62.5	75	75	3	0.6	0.5	0	0	0.5	0.6	3
RBL99	Bell Road	99th Avenue	3,206	1,213.26	1,200.00	0.0041	County	1			91	17	17	124	0	0	16.5	16.5	107.5	107.5	124	124	3	0.7	0.5	0	0	0.5	0.7	3
RBL75B	Bell Road	75th Avenue	2,940	1,232.19	1,218.00	0.0048	Glendale	A-4			95	18	18	130	0	0	17.5	17.5	112.5	112.5	130	130	3	0.7	0.5	0	0	0.5	0.7	3
RBLNR	Bell Road	New River	2,700	1,225.54	1,218.00	0.0028	Glendale			1	36	7	7	50	0	0	7	7	43	43	50	50	3	0.6	0.5	0	0	0.5	0.6	3
RBLLO	Bell Road	Loop 101	9,255	1,232.22	1,202.00	0.0033	Glendale	A-4			95	18	18	130	0	0	17.5	17.5	112.5	112.5	130	130	3	0.7	0.5	0	0	0.5	0.7	3
RUHSKB	Union Hills Drive	Skunk Creek	6,960	1,288.99	1,265.00	0.0034	Glendale	A-4			95	18	18	130	0	0	17.5	17.5	112.5	112.5	130	130	3	0.7	0.5	0	0	0.5	0.7	3
RLO75	Loop 101	75th Avenue	7,499	1,294.00	1,258.42	0.0047	Glendale		1		42	13	13	68	0	0	13	13	55	55	68	68	3	0.6	0.5	0	0	0.5	0.6	3
RDV87	Deer Valley Road	87th Avenue	5,316	1,311.70	1,278.31	0.0063	County		1		50	13	13	75	0	0	12.5	12.5	62.5	62.5	75	75	3	0.6	0.5	0	0	0.5	0.6	3
RDV91	Deer Valley Road	91st Avenue	5,295	1,314.00	1,280.00	0.0064	Peoria	1			91	17	17	124	0	0	16.5	16.5	107.5	107.5	124	124	3	0.7	0.5	0	0	0.5	0.7	3
RWL75A	Williams Road	75th Avenue	5,062	1,336.06	1,299.65	0.0072	Glendale			1	36	7	7	50	0	0	7	7	43	43	50	50	3	0.6	0.5	0	0	0.5	0.6	3
RWL75B	Williams Road	75th Avenue	2,577	1,312.32	1,299.65	0.0049	Glendale			1	36	7	7	50	0	0	7	7	43	43	50	50	3	0.6	0.5	0	0	0.5	0.6	3
RPP73B	Pinnacle Peak Road	73rd Avenue	3,886	1,337.00	1,312.32	0.0064	Peoria	1			91	17	17	124	0	0	16.5	16.5	107.5	107.5	124	124	3	0.7	0.5	0	0	0.5	0.7	3
RPPLP	Pinnacle Peak Road	Lake Pleasant Boulevard	8,751	1,362.00	1,304.00	0.0066	County			1	31	10	10	50	0	0	9.5	9.5	40.5	40.5	50	50	3	0.6	0.5	0	0	0.5	0.6	3
RPP03B	Pinnacle Peak Road	103rd Avenue	1,900	1,309.02	1,300.00	0.0047	County			1	31	10	10	50	0	0	9.5	9.5	40.5	40.5	50	50	3	0.6	0.5	0	0	0.5	0.6	3
RWL67	Williams Road	67th Avenue	1,195	1,336.06	1,334.42	0.0014	Glendale	A-1			69	21	21	110	0	0	20.5	20.5	89.5	89.5	110	110	3	0.7	0.5	0	0	0.5	0.7	3

Notes:

1. The Routing ID corresponds to the KK card in HEC-1.
2. Streets correspond to streets downstream of Routing ID.
3. Elevation data was obtained from the Flood Control District of Maricopa County and represents either 2-ft or 10-ft topo data.
4. For this study Arterial streets represent the mile streets, Collector streets represent the half-mile streets, and Local Streets are all other streets.
5. Streets within the City of Glendale are based on Glendale typical sections. Streets outside of Glendale are based on average street sections from the Cities of Peoria and Phoenix. Glendale arterial street typical section was selected based on City of Glendale Detail G-300.
6. The City of Glendale has several typical details for a collector street that are very similar. An average City of Glendale section was used for collector streets within Glendale. Collector streets outside of Glendal are based on average street sections from the Cities of Peoria and Phoenix.
7. The width of the channel is based on a composite street width from the typical details.
8. The left overbank and right overbank are based on composite street widths. The overbanks were calculated by subtracting the channel width from the right-of-way.
9. The total width is the composite right-of-way width for the street sections based on the typical details.
10. The RX and RY represent the 8-point cross section used in the Normal Depth routing method from HEC-1.
    Curb heights were assumed to be 0.5 ft and a slope of 1% was used from the curb to the limits of the right-of-way.

Kimley-Horn and Associates, Inc.

Project: ***Glendale Stormwater Management Plan***
Subject: **Routing Reach Parameters - Streets**
Model: **Glendale/Peoria**
Designed by: **MAF** Date 11/6/2009 KHA Project No. 091910009
Checked by: **AOM** Date 1/18/2010 City of Glendale No. 089017

Objective: To determine the slope and composite width of the streets for diversion ratio calculations

Streets diverting flows in the south direction - no route (information may be used to calculate diversion)[1]

E/W Boundary Name[2]	N/S Boundary Name[2]	Length (ft)	USGE[3] (ft)	DSGE[3] (ft)	Slope (ft/ft)	City	Number or Type of Streets[4]			Width (ft)			
							Arterial[5]	Collector[6]	Local	Channel[7]	LOB[8]	ROB[8]	Total[9]
Williams Road	75th Avenue	1,200	1,322.00	1,320.00	0.0017	Glendale	0	1	2	114	27	27	168
Loop 101	75th Avenue	2,640	1,283.00	1,270.00	0.0049	Glendale	A-1	1	2	183	48	48	278
ACDC	43rd Avenue	3,447	1,241.22	1,227.10	0.0041	Phoenix	1	1	4	265	67	67	399
ACDC	51st Avenue	5,280	1,238.62	1,225.71	0.0024	Phoenix	1	1	4	265	67	67	399
ACDC	59th Avenue	5,280	1,235.39	1,221.48	0.0026	Glendale	A-4	1	2	209	45	45	298

Notes:

1. Some subbasins may not use street routing but the slope and width of the streets must be calculated to determine the ratio of flow diverted west and south, which is based on the streets.
2. Streets correspond to streets downstream of Routing ID.
3. Elevation data was obtained from the Flood Control District of Maricopa County and represents either 2-ft or 10-ft topo data.
4. For this study Arterial streets represent the mile streets, Collector streets represent the half-mile streets, and Local Streets are all other streets.
5. Streets within the City of Glendale are based on Glendale typical sections. Streets outside of Glendale are based on average street sections from the Cities of Peoria and Phoenix. Glendale arterial street typical section was selected based on City of Glendale Detail G-300.
6. The City of Glendale has several typical details for a collector street that are very similar. An average City of Glendale section was used for collector streets within Glendale. Collector streets outside of Glendal are based on average street sections from the Cities of Peoria and Phoenix.
7. The width of the channel is based on a composite street width from the typical details.
8. The left overbank and right overbank are based on composite street widths. The overbanks were calculated by subtracting the channel width from the right-of-way.
9. The total width is the composite right-of-way width for the street sections based on the typical details.

Kimley-Horn and Associates, Inc.

Project: ***Glendale Stormwater Management Plan***
Subject: **Routing Reach Parameters - Streets**
Model: **Glendale/Peoria**
Designed by: **MAF** Date 11/6/2009
Checked by: **AOM** Date 1/18/2010

KHA Project No. 091910009
City of Glendale No. 089017

Objective: To determine the slope and composite width of the streets for diversion ratio calculations

Streets diverting flows in the west direction - no route (information may be used to calculate diversion)[1]

E/W Boundary Name[2]	N/S Boundary Name[2]	Length (ft)	USGE[3] (ft)	DSGE[3] (ft)	Slope (ft/ft)	City	Number or Type of Streets[4]			Width (ft)			
							Arterial[5]	Collector[6]	Local	Channel[7]	LOB[8]	ROB[8]	Total[9]
Pinnacle Peak Road	75th Avenue	1,870	1,312.00	1,306.00	0.0032	Peoria	1	0	1	122	26	26	174
Deer Valley Road	New River	240	1,283.00	1,282.00	0.0042	Peoria	1	0	0	91	17	17	124
Union Hills Drive	Skunk Creek	6,960	1,288.99	1,265.00	0.0034	Glendale	A-4	0	5	275	53	53	380
Bell Road	75th Avenue	2,940	1,232.19	1,218.00	0.0048	Glendale	A-4	1	2	209	45	45	298
Skunk Creek	67th Avenue	5,280	1,251.61	1,232.19	0.0037	Glendale	0	1	6	258	55	55	368
ACDC	43rd Avenue	5,280	1,241.79	1,225.71	0.0030	Phoenix	0	0	7	217	67	67	350
ACDC	51st Avenue	5,280	1,238.62	1,221.48	0.0032	Phoenix	0	1	4	174	51	51	275
ACDC	59th Avenue	5,280	1,235.39	1,218.29	0.0032	Glendale	0	1	2	114	27	27	168
ACDC	75th Avenue	2,940	1,232.19	1,218.00	0.0048	Glendale	A-1	1	9	435	97	97	628

Notes:

1. Some subbasins may not use street routing but the slope and width of the streets must be calculated to determine the ratio of flow diverted west and south, which is based on the streets.
2. Streets correspond to streets downstream of Routing ID.
3. Elevation data was obtained from the Flood Control District of Maricopa County and represents either 2-ft or 10-ft topo data.
4. For this study Arterial streets represent the mile streets, Collector streets represent the half-mile streets, and Local Streets are all other streets.
5. Streets within the City of Glendale are based on Glendale typical sections. Streets outside of Glendale are based on average street sections from the Cities of Peoria and Phoenix. Glendale arterial street typical section was selected based on City of Glendale Detail G-300.
6. The City of Glendale has several typical details for a collector street that are very similar. An average City of Glendale section was used for collector streets within Glendale. Collector streets outside of Glendal are based on average street sections from the Cities of Peoria and Phoenix.
7. The width of the channel is based on a composite street width from the typical details.
8. The left overbank and right overbank are based on composite street widths. The overbanks were calculated by subtracting the channel width from the right-of-way.
9. The total width is the composite right-of-way width for the street sections based on the typical details.

Kimley-Horn and Associates, Inc.

Project: ***Glendale Stormwater Management Plan***
Subject: **Routing Reach Parameters - Streets**
Model: **Glendale/Peoria**
Designed by: **MAF** Date 11/6/2009 KHA Project No. 091910009
Checked by: **AOM** Date 1/18/2010 City of Glendale No. 089017

Objective: To determine the slope and composite width of the streets for diversion ratio calculations

Single streets diverting flows - no route (information may be used to calculate diversion)[1]

E/W Boundary Name[2]	N/S Boundary Name[2]	Length (ft)	USGE[3] (ft)	DSGE[3] (ft)	Slope (ft/ft)	City	Number or Type of Streets[4]			Width (ft)			
							Arterial[5]	Collector[6]	Local	Channel[7]	LOB[8]	ROB[8]	Total[9]
Happy Valley Road	Lake Pleasant Boulevard	3,960	1,362.00	1,340.00	0.0056	Peoria	1	0	0	91	17	17	124
Pinnacle Peak Road	Lake Pleasant Boulevard	1,320	1,362.00	1,348.00	0.0106	Glendale	A-1	1	2	183	48	48	278
Olive Avenue	99th Avenue	1,820	1,102.00	1,094.00	0.0044	Peoria	1	0	0	91	17	17	124
Northern Avenue	New River	2,640	1,102.00	1,094.00	0.0030	Peoria	0	1	2	112	32	32	175

Notes:

1. Some subbasins may not use street routing but the slope and width of the streets must be calculated to determine the ratio of flow diverted west and south, which is based on the streets.
2. Streets correspond to streets downstream of Routing ID.
3. Elevation data was obtained from the Flood Control District of Maricopa County and represents either 2-ft or 10-ft topo data.
4. For this study Arterial streets represent the mile streets, Collector streets represent the half-mile streets, and Local Streets are all other streets.
5. Streets within the City of Glendale are based on Glendale typical sections. Streets outside of Glendale are based on average street sections from the Cities of Peoria and Phoenix. Glendale arterial street typical section was selected based on City of Glendale Detail G-300.
6. The City of Glendale has several typical details for a collector street that are very similar. An average City of Glendale section was used for collector streets within Glendale. Collector streets outside of Glendal are based on average street sections from the Cities of Peoria and Phoenix.
7. The width of the channel is based on a composite street width from the typical details.
8. The left overbank and right overbank are based on composite street widths. The overbanks were calculated by subtracting the channel width from the right-of-way.
9. The total width is the composite right-of-way width for the street sections based on the typical details.

Kimley-Horn and Associates, Inc.

Project: ***Glendale Stormwater Management Plan***
Subject: **Storm Drain Diversion Parameters**
Model: **Glendale/Peoria**
Designed by: **ZRS** Date 9/14/2010 KHA Project No. 091910009
Checked by: **MAF** Date 9/15/2010 City of Glendale No. 089017

Objective: To determine the flow that will be diverted into the storm drain

Storm Drain Diverts

Pipe Diversion ID	E/W Street Name	N/S Street Name	City	Storm Drain Diameter No. 1	Storm Drain Diameter No. 2	Storm Drain Capacity No. 1	Storm Drain Capacity No. 2	Combined Storm Drain Capacity	Combined Storm Drain Diameter
D59BL	Bell Road	59th Avenue	Glendale	54	---	108	---	108	---
D59GW	Greenway Road	59th Avenue	Glendale	78	---	273	---	273	---
DTB59	Thunderbird Road	59th Avenue	Glendale	96	---	578	---	578	---
D67BL	Bell Road	67th Avenue	Glendale	36	---	32	---	32	---
D67GW	Greenway Road	67th Avenue	Glendale	84	---	608	---	608	---
DUHSK	Union Hills Drive	Skunk Creek	Glendale	24	---	10	---	10	---
DBLLO	Bell Road	Loop 101	Glendale	84	---	169	---	169	---
DPP87	Pinnacle Peak Road	87th Avenue	Peoria	48	---	128	---	128	---
DP83PP	Pinnacle Peak Road	83rd Avenue	Peoria	36	---	31	---	31	---
DPPP91	Pinnacle Peak Road	91st Avenue	Peoria	54	---	88	---	88	---
DUH91	Union Hills Drive	91st Avenue	Peoria	54	78	129	454	583	96
DPBLNR	Bell Road	New River	Peoria	72	---	159	---	159	---
DPUHNR	Union Hills Drive	New River	Peoria	42	---	50	---	50	---
DUH35	Union Hills Drive	35th Avenue	Phoenix	114	---	875	---	875	---
D35BL	Bell Road	35th Avenue	Phoenix	60	---	158	---	158	---
D35GW	Greenway Road	35th Avenue	Phoenix	78	---	318	---	318	---
D35TB	Thunderbird Road	35th Avenue	Phoenix	96	---	554	---	554	---
D35CT	Cactus Road	35th Avenue	Phoenix	96	---	554	---	554	---
D35PE	Peoria Avenue	35th Avenue	Phoenix	90	---	466	---	466	---
DUH43	Union Hills Drive	43rd Avenue	Phoenix	132	---	1268	---	1268	---
D43BL	Bell Road	43rd Avenue	Phoenix	54	---	117	---	117	---
D43GW	Greenway Road	43rd Avenue	Phoenix	60	---	155	---	155	---
D43TB	Thunderbird Road	43rd Avenue	Phoenix	78	---	312	---	312	---
D43CT	Cactus Road	43rd Avenue	Phoenix	84	---	380	---	380	---
D43PE	Peoria Avenue	43rd Avenue	Phoenix	90	42	456	64	520	96
DUH51	Union Hills Drive	51st Avenue	Phoenix	144	---	1548	---	1548	---
D51SK	Skunk Creek	51st Avenue	Phoenix	30	---	24	---	24	---
D51BL	Bell Road	51st Avenue	Phoenix	36	---	38	---	38	---
D51GW	Greenway Road	51st Avenue	Phoenix	60	---	150	---	150	---
D51TB	Thunderbird Road	51st Avenue	Phoenix	72	---	244	---	244	---
D51CT	Cactus Road	51st Avenue	Phoenix	72	---	244	---	244	---
D51LO	Loop 101	51st Avenue	Phoenix	36	---	38	---	38	---

Multiple Street Routing Description

The multiple street diversions estimate how much of the runoff in a subbasin will flow south and how much will flow west. The diversion is a constant ratio based on normal depth calculations using Manning's equation. The ratio is based on the composite width of all the north/south streets and the slope of the north/south arterial street compared to the composite width of all the east/west streets and the slope of the east/west arterial.

According to Manning's Equation:

$$Q = \frac{1.49}{n} A\, R^{2/3} S^{1/2}$$

Where:

Q = Discharge, cfs

n = Manning's roughness coefficient

A = Cross-sectional area of flow, sq ft

R = Hydraulic radius, $\frac{A}{P_w}$

S = Slope, ft/ft

P_w= Wetted perimeter, ft

Assuming a rectangular street section, $A = W \times d$

Where:

W = Width, ft

d = depth, ft

Assuming the depth is negligible compared to the width, $P_w \cong W$

Manning's Equation becomes:

$$Q = \frac{1.49}{n} Wd \left(\frac{Wd}{W}\right)^{2/3} S^{1/2}$$

Which simplifies to:

$$Q = \frac{1.49}{n} W\, d^{5/3} S^{1/2}$$

The total discharge will equal the sum of the discharge diverted west and the discharge diverted south. The following equation shows this relationship, where the subscript T indicates the total discharge, W indicates the parameters for the flow diverted west, and S indicates the parameters for the flow diverted south.

$$Q_T = \frac{1.49}{n_w} W_w \, {d_w}^{5/3} {S_w}^{1/2} + \frac{1.49}{n_S} W_s \, {d_s}^{5/3} {S_s}^{1/2}$$

Assuming that $n \cong n_W \cong n_S$ and $d \cong d_W \cong d_S$, this becomes:

$$Q_T = \frac{1.49 d^{5/3}}{n} \left(W_w \, {S_w}^{1/2} + W_s \, {S_s}^{1/2} \right)$$

It is evident that Q_w depends on W_w and S_w and that Q_s depends on W_s and S_s, so the ratio for the discharge diverted west is $\frac{Q_W}{Q_T}$ or:

$$\frac{W_w \, {S_w}^{1/2}}{W_w \, {S_w}^{1/2} + W_s \, {S_s}^{1/2}}$$

And the ratio for the discharge diverted south is $\frac{Q_S}{Q_T}$ or:

$$\frac{W_s \, {S_s}^{1/2}}{W_w \, {S_w}^{1/2} + W_s \, {S_s}^{1/2}}$$

Kimley-Horn and Associates, Inc.

Project: ***Glendale Stormwater Management Plan***
Subject: **Multiple Street Diversion Parameters**
Model: **Glendale/Peoria**
Designed by: **MAF** Date 11/6/2009 KHA Project No. 091910009
Checked by: **AOM** Date 1/18/2010 City of Glendale No. 089017

Objective: To determine the percent of subbasin flow that will be diverted in the south and west directions

Diversion ID[1]	Retrieval ID[1]	E/W Boundary Name[2]	N/S Boundary Name[2]	N/S Width[3] (ft)	N/S Slope[4] (ft/ft)	E/W Width[3] (ft)	E/W Slope[4] (ft/ft)	Percent Diverted South[5]	Percent Diverted West[5]
DSBL35	DWUH43	Union Hills Drive	35th Avenue	449	0.0030	399	0.0041	49%	51%
DSGW35	DWBL43	Bell Road	35th Avenue	274	0.0041	499	0.0047	34%	66%
DSTB35	DWGW43	Greenway Road	35th Avenue	324	0.0035	449	0.0034	42%	58%
DSCT35	DWTB43	Thunderbird Road	35th Avenue	499	0.0036	549	0.0037	48%	52%
DSPE35	DWCT43	Cactus Road	35th Avenue	399	0.0023	499	0.0029	42%	58%
DSAC35	DWPE43	Peoria Avenue	35th Avenue	225	0.0041	599	0.0030	30%	70%
DSGW43	DWBL51	Bell Road	43rd Avenue	349	0.0028	249	0.0040	54%	46%
DSTB43	DWGW51	Greenway Road	43rd Avenue	399	0.0038	399	0.0047	47%	53%
DSCT43	DWTB51	Thunderbird Road	43rd Avenue	299	0.0030	449	0.0037	37%	63%
DSPE43	DWCT51	Cactus Road	43rd Avenue	299	0.0024	449	0.0032	37%	63%
DSAC43	DWAC51	Peoria Avenue	43rd Avenue	399	0.0041	275	0.0032	62%	38%
DSGW51	DWBL59	Bell Road	51st Avenue	299	0.0035	348	0.0031	48%	52%
DSTB51	DWGW59	Greenway Road	51st Avenue	249	0.0027	428	0.0033	35%	65%
DSCT51	DWTB59	Thunderbird Road	51st Avenue	174	0.0026	248	0.0032	39%	61%
DSAC51	DWAC59	Cactus Road	51st Avenue	399	0.0024	168	0.0032	67%	33%
DSGW59	DWBL67	Bell Road	59th Avenue	280	0.0038	130	0.0037	69%	31%
DSTB59	DWGW67	Greenway Road	59th Avenue	448	0.0026	378	0.0025	55%	45%
DSAC59	DWAC67	Thunderbird Road	59th Avenue	298	0.0026	200	0.0029	59%	41%
DSGW67	DWBL75	Bell Road	67th Avenue	298	0.0025	298	0.0048	42%	58%
DSAC67	DWAC75	Greenway Road	67th Avenue	218	0.0020	628	0.0048	18%	82%
DWPP75	DSWL75	Pinnacle Peak Road	73rd Avenue	168	0.0017	174	0.0032	41%	59%
DEPE97	DSOL99	Peoria Avenue	99th Avenue	124	0.0038	374	0.0023	30%	70%

Notes:
1. The IDs correspond to KK and DT cards in HEC-1.
2. The streets or watercourse where flow is to be diverted.
3. The composite width of the right-of-way of each road in the indicated direction.
4. The slope of the arterial street.
5. Percent diverted west = $W_w * S_w^{0.5} / (W_w * S_w^{0.5} + W_s * S_s^{0.5})$
   Percent diverted south = $W_s * S_s^{0.5} / (W_w * S_w^{0.5} + W_s * S_s^{0.5})$
   Where W_w = Width of west streets
   W_s = Width of south streets
   S_w = Slope of west arterial
   S_s = Slope of south arterial

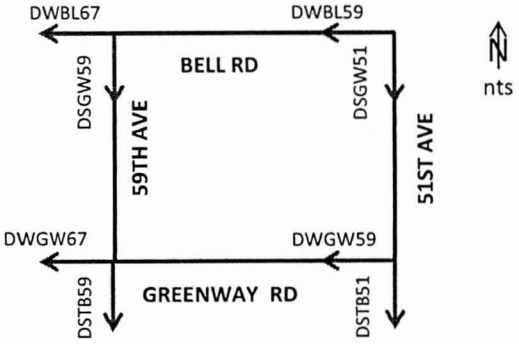

Kimley-Horn and Associates, Inc.

Project: ***Glendale Stormwater Management Plan***
Subject: **Single Street Intersection Diversion Parameters**
Model: **Glendale/Peoria**
Designed by: **MAF** Date 11/6/2009 KHA Project No. 091910009
Checked by: **AOM** Date 1/18/2010 City of Glendale No. 089017

Objective: To determine the percent of subbasin flow that will be diverted in the south and west directions

Diversion Records		Location of Diversion		East/West Street Parameters			North/South Street Parameters			Percent Diverted	
Diversion ID[1]	Retrieval ID[1]	E/W Boundary Name[2]	N/S Boundary Name[2]	Type	Width[3] (ft)	Slope[4] (ft/ft)	Type	Width[3] (ft)	Slope[4] (ft/ft)	West[5]	South[5]
DWPP73	DSWL67	Pinnacle Peak Road	67th Avenue	Arterial	124	0.0064	Arterial	124	0.0014	68%	32%
DWOL99	DSNONR	Olive Avenue	New River	Arterial	124	0.0044	Collector	75	0.0030	67%	33%
DSPPLP	DWHVLP	Happy Valley Road	93rd Avenue	Arterial	124	0.0056	Arterial	124	0.0106	42%	58%

Notes:

1. The IDs correspond to KK and DT cards in HEC-1.
2. The streets or watercourse where flow is to be diverted.
3. The width of the right-of-way of the street in the indicated direction.
4. The slope of the arterial street.
5. Percent diverted west = $W_w * S_w^{0.5} / (W_w * S_w^{0.5} + W_s * S_s^{0.5})$
   Percent diverted south = $W_s * S_s^{0.5} / (W_w * S_w^{0.5} + W_s * S_s^{0.5})$
   Where W_w = Width of west street
   W_s = Width of south street
   S_w = Slope of west street
   S_s = Slope of south street

Kimley-Horn and Associates, Inc.

Project: ***Glendale Stormwater Management Plan***
Subject: **Parallel Street Diversion Parameters**
Model: **Glendale/Peoria**
Designed by: **MAF** Date 11/6/2009
Checked by: **AOM** Date 1/18/2010

KHA Project No. 091910009
City of Glendale No. 089017

Objective: To determine the percent of flow that will be diverted to the downstream subbasins based on the street widths.

Diverting Flows in the West Direction

Source Diversion ID[1]	E/W Boundary Name[2]	N/S Boundary Name[2]	Arterial Diversion ID[3]	Retrieval ID[3]	City[4]	Arterial Streets[5]		Collector and Local Streets[5]			Total Width (ft)[9]	Percent Diverted to Arterial[10]	Percent Diverted to Collector/Local[10]
						Type	Width (ft)[6]	Collector	Local	Width (ft)[7]			
DWBL67	Bell Road	59th Avenue	DBL67	DWSK67	Glendale	A-4	130	1	6	368	498	26%	74%

Diverting Flows in the South Direction

Source Diversion ID[1]	E/W Boundary Name[2]	N/S Boundary Name[2]	Diversion ID[3]	Retrieval ID[3]	City[4]	East Streets				West Streets				Total Width (ft)[9]	Percent Diverted to East Streets[10]	Percent Diverted to West Streets[10]
						Arterial[5]	Collector[5]	Local[5]	Width (ft)[8]	Arterial[5]	Collector[5]	Local[5]	Width (ft)[8]			
CUH87	Union Hills Drive	87th Avenue	DSBLNR	DSBL91	Peoria	1	0	1	174	1	1	1	249	423	41%	59%
CBL91	Bell Road	91st Avenue	DSGWNR	DSGW91	Peoria	0	1	1	125	1	0	1	174	299	42%	58%

Notes:
1. These IDs correspond to the divert in the indicated direction that will be split again to direct flow either to the arterial street or the local and collector streets.
2. The streets or watercourse where flow is to be diverted.
3. The IDs correspond to KK and DT cards in HEC-1 for the second divert.
4. Streets within the City of Glendale are based on Glendale typical sections. Streets outside of Glendale are based on average street sections from the Cities of Peoria and Phoenix. Glendale arterial street typical section was selected based on City of Glendale Detail G-300.
5. For this study Arterial streets represent the mile streets, Collector streets represent the half-mile streets, and Local Streets are all other streets.
6. The width of the right-of-way of the arterial street in the indicated direction.
7. The width of the right-of-way of the collector and local streets in the indicated direction.
8. The width of the right-of-way of the arterial, collector and local streets for the indicated streets.
9. The width of the right-of-way of all the arterial, collector and local streets downstream of the diversion.
10. The percent diverted in each direction is based on a ratio of the street widths.

Kimley-Horn and Associates, Inc.

Project: ***Glendale Stormwater Management Plan***
Subject: **Diversion Parameters**
Model: **Glendale/Peoria**
Designed by: **MAF** Date 11/6/2009
Checked by: **AOM** Date 1/18/2010

KHA Project No. 091910009
City of Glendale No. 089017

Objective: To determine the percent of subbasin flow that will be diverted

Diversion based on data from Northwest Region Update

Diversion Records		Location of Diversion		Northwest Region Update Data																					Revised Records[3]							
Diversion ID[1]	Retrieval ID[1]	E/W Boundary Name[2]	N/S Boundary Name[2]	Record ID	DI Records										DQ Records										DQ Records							
DSBY91	DWRGLP	Rose Garden Lane	93rd Avenue	N11DAW	0	5	9	50	84	113	140	205			0	5	9	15	18	20	22	23			0	0	0	35	66	93	118	182
DSBY07	DWRG07	Rose Garden Lane	Lake Pleasant Boulevard	DA09G	0	50	100	300	750	1200	2000				0	10	20	60	150	150	150				0	40	80	240	600	1050	1850	
DSUH99	DWBYAF	Beardsley Road	99th Avenue	DA09F	0	10	30	50	100	500	700	1000			0	0.2	0.3	0.4	0.5	80	250	500			0	10	30	50	100	420	450	500

Notes:
1. The IDs correspond to KK and DT cards in HEC-1.
2. The streets or watercourse at the intersection where the diversion occurs.
3. These records have been revised to switch the direction of the split. Instead of diverting flow to the south and continuing the route to the west, this record has been modified to divert flow the west and continuing the route to the south.

Diversion based on data from Glendale/Peoria Area Drainage Master Plan Update

Diversion Records		Location of Diversion		Area Drainage Master Plan UpdateData																			
Diversion ID[1]	Retrieval ID[1]	E/W Boundary Name[2]	N/S Boundary Name[2]	Record ID	DI Records										DQ Records								
DWDVNR	DSLO75	Deer Valley Road	75th Avenue	DN23A	0	1	92	274	365	456	546	700	800	1000	0	0.01	26	70	87	109	131	167	191	239

Notes:
1. The IDs correspond to KK and DT cards in HEC-1.
2. The streets or watercourse at the intersection where the diversion occurs.

Diversions based on topography and aerial photography

Diversion ID[1]	Retrieval ID[1]	Location of Diversion		Percent Diverted[3]	Description of diversion
		E/W Boundary Name[2]	N/S Boundary Name[2]		
DDV99	DSDVLP	Pinnacle Peak Road	Lake Pleasant Boulevard	33%	Divert subbasin PPLP based on topography in existing model. All flow goes west in the future model.
DWCLAF	DSPP03	Calle Lejos	103rd Avenue	12%	Divert subbasin CL07 based on topography.
DWPE99	DSOLNR	Peoria Avenue	New River	44%	Divert subbasin PENR based on topography.
DSBL43	DWUH51	Union Hills Drive	43rd Avenue	42%	Divert subbasin UH43 based on topography.
DSBL51	DWUHSK	Union Hills Drive	51st Avenue	61%	Divert subbasin UH51 based on topography.

Notes:
1. The IDs correspond to KK and DT cards in HEC-1.
2. The streets or watercourse at the intersection where the diversion occurs.

Diversions based on channel capacities

Diversion ID[1]	Retrieval ID[1]	Location of Diversion		Channel Capacity[3] (cfs)	Description of diversion
		E/W Boundary Name[2]	N/S Boundary Name[2]		
DEGWNR	DSTBNR	Greenway Road	91st Avenue	1,350	Flow exceeding channel capacity is diverted south. Capacity obtained from G/P ADMPU.
DSDV99	DWPP03	Pinnacle Peak Road	Lake Pleasant Boulevard	0	All flow goes south in the existing model. All flow goes west in the future model.
DSBL99	DWDW07	Del Webb Boulevard	99th Avenue	550	Channel capacity is diverted west. Capacity obtained from NWRU.
DSTL07	DWBL15	Del Webb Boulevard	107th Avenue	550	Channel capacity is diverted west. Capacity obtained from NWRU.
DWPP07	DSDV07	Pinnacle Peak Road	103rd Avenue	0	All flow goes south in the existing model. All flow goes west in the future model.

Notes:
1. The IDs correspond to KK and DT cards in HEC-1.
2. The streets or watercourse where flow is to be diverted.
3. Channel capacities obtained from previous hydrology models.

Appendix H Cumulative Area Calculations

Maryvale ADMS Area Calculations

Glendale/Peoria ADMPU Area Calculations

Kimley-Horn and Associates, Inc.

Project: ***Glendale Stormwater Management Plan***
Subject: **Areas Contributing to Combination Points for Areal Reduction**
Model: **Maryvale**
Designed by: **MAF** Date 8/20/2009 KHA Project No. 091910009
Checked by: **AOM** Date 12/7/2009 City of Glendale No. 089017

Objective: To determine the area that will be contributing to each combination point so that areal reduction values will be correctly applied.

Area contributing to each combination point (for areal reduction). Percent of contributing area based on percent flow diverted each direction.

Combination Point ID[1]	E/W Boundary Name[2]	N/S Boundary Name[2]	Combination Point to North[3]			Combination Point to East[3]			Additional Combination Point[3]			Contributing Subbasin		Total Area[4] (sq mi)
			ID	Area (sq mi)	Percent Contribute	ID	Area (sq mi)	Percent Contribute	ID	Area (sq mi)	Percent Contribute	Subbasin ID	Area (sq mi)	
*GW83	Greenway Road	83rd Avenue										GW83	0.29	0.29
*TB67	Thunderbird Road	67th Avenue										TB67	0.27	0.27
CTB75	Thunderbird Road	75th Avenue				*TB67	0.27	60%				TB75	1.03	1.18
CTB83	Thunderbird Road	83rd Avenue	*GW83	0.29	43%	CTB75	1.18	55%				TB83	0.99	1.77
CTBLO	Thunderbird Road	Loop 101				CTB83	1.77	29%				TBLO	0.10	0.62
*CT59	Cactus Road	59th Avenue										CT59	0.30	0.30
CCT67	Cactus Road	67th Avenue	*TB67	0.27	40%	*CT59	0.30	32%				CT67	0.91	1.11
CCT75	Cactus Road	75th Avenue	CTB75	1.18	45%	CCT67	1.11	57%				CT75	1.00	2.17
CCT83	Cactus Road	83rd Avenue	CTB83	1.77	71%	CCT75	2.17	50%				CT83	1.01	3.34
CCTLO	Cactus Road	Loop 101	CTBLO	0.62	100%	CCT83	3.34	59%				CTLO	0.87	3.46
*PE51	Peoria Avenue	51st Avenue										PE51	0.42	0.42
CPE59	Peoria Avenue	59th Avenue	*CT59	0.30	68%	*PE51	0.42	60%				PE59	0.99	1.44
CPE67	Peoria Avenue	67th Avenue	CCT67	1.11	43%	CPE59	1.44	43%				PE67	0.96	2.06
CPE75	Peoria Avenue	75th Avenue	CCT75	2.17	50%	CPE67	2.06	62%				PE75	1.01	3.36
CPE83	Peoria Avenue	83rd Avenue	CCT83	3.34	41%	CPE75	3.36	48%				PE83	1.00	3.97
CGR91	Grand Avenue	91st Avenue	CCTLO	3.46	50%	CPE83	3.97	34%				GR91	0.51	3.58
CGRLO	Grand Avenue	Loop 101	CCTLO	3.46	50%	CGR91	3.58	33%						2.91
CIPEGR	Peoria Avenue	Grand Avenue	CGR91	3.58	67%	CPE83	3.97	19%						3.14
CPE91	Peoria Avenue	91st Avenue				CIPEGR	3.14	100%				PE91	0.51	3.65
CPELO	Peoria Avenue	Loop 101	CGRLO	2.91	100%	CPE91	3.65	45%				PELO	0.27	4.81
*OL35	Olive Avenue	35th Avenue										OL35	0.21	0.21
COL43	Olive Avenue	43rd Avenue				*OL35	0.21	30%				OL43	0.64	0.70
COL51	Olive Avenue	51st Avenue	*PE51	0.42	40%	COL43	0.70	41%				OL51	0.99	1.45
COL59	Olive Avenue	59th Avenue	CPE59	1.44	57%	COL51	1.45	66%				OL59	0.99	2.78
COL67	Olive Avenue	67th Avenue	CPE67	2.06	38%	COL59	2.78	39%				OL67	0.96	2.84
COL75	Olive Avenue	75th Avenue	CPE75	3.36	52%	COL67	2.84	56%				OL75	1.00	4.34
CGR83	Grand Avenue	83rd Avenue	CPE83	3.97	35%	COL75	4.34	49%				GR83	0.47	3.99
COL83	Olive Avenue	83rd Avenue	CPE83	3.97	13%	CGR83	3.99	0%				OL83	0.54	1.06
COL91	Olive Avenue	91st Avenue	CPE91	3.65	55%	COL83	1.06	61%				OL91	1.02	3.68
COLLO	Olive Avenue	Loop 101	CPELO	4.81	100%	COL91	3.68	33%				OLLO	0.16	6.18
*NO27	Northern Avenue	27th Avenue										NO27	0.13	0.13
CNO35	Northern Avenue	35th Avenue	*OL35	0.21	70%	*NO27	0.13	0%				NO35	0.99	1.14
CNO43	Northern Avenue	43rd Avenue	COL43	0.70	59%	CNO35	1.14	54%				NO43	1.00	2.02
CNO51	Northern Avenue	51st Avenue	COL51	1.45	34%	CNO43	2.02	49%				NO51	0.99	2.47
CNO59	Northern Avenue	59th Avenue	COL59	2.78	61%	CNO51	2.47	56%				NO59	0.99	4.06
CNO67	Northern Avenue	67th Avenue	COL67	2.84	44%	CNO59	4.06	67%				NO67	0.96	4.93
CGR75	Grand Avenue	75th Avenue	COL75	4.34	33%	CNO67	4.93	24%				GR75	0.50	3.09
CIGR75	Grand Avenue	75th Avenue	COL75	4.34	18%	CGR75	3.09	100%	CGR83	3.99	100%			7.85

Kimley-Horn and Associates, Inc.

Project: ***Glendale Stormwater Management Plan***
Subject: **Areas Contributing to Combination Points for Areal Reduction**
Model: **Maryvale**
Designed by: **MAF** Date 8/20/2009 KHA Project No. 091910009
Checked by: **AOM** Date 12/7/2009 City of Glendale No. 089017

Objective: To determine the area that will be contributing to each combination point so that areal reduction values will be correctly applied.

Area contributing to each combination point (for areal reduction). Percent of contributing area based on percent flow diverted each direction.

Combination Point ID[1]	E/W Boundary Name[2]	N/S Boundary Name[2]	Combination Point to North[3]			Combination Point to East[3]			Additional Combination Point[3]			Contributing Subbasin		Total Area[4] (sq mi)
			ID	Area (sq mi)	Percent Contribute	ID	Area (sq mi)	Percent Contribute	ID	Area (sq mi)	Percent Contribute	Subbasin ID	Area (sq mi)	
CNO75	Northern Avenue	75th Avenue	CIGR75	7.85	100%	CNO67	4.93	12%				NO75	0.51	8.93
CNO83	Northern Avenue	83rd Avenue	COL83	1.06	39%	CNO75	8.93	52%				NO83	1.01	6.05
CNO91	Northern Avenue	91st Avenue	COL91	3.68	67%	CNO83	6.05	100%				NO91	0.99	9.52
CNOLO	Northern Avenue	Loop 101	COLLO	6.18	100%	CNO91	9.52	47%				NOLO	0.28	10.91
CGL43	Glendale Avenue	43rd Avenue	CNO43	2.02	51%		0.00	0%				GL43	1.00	2.03
CGL51	Glendale Avenue	51st Avenue	CNO51	2.47	44%	CGL43	2.03	41%				GL51	1.00	2.91
CGL59	Glendale Avenue	59th Avenue	CNO59	4.06	33%	CGL51	2.91	53%				GL59	1.02	3.91
CGL35	Glendale Avenue	35th Avenue	CNO35	1.14	46%							GL35	1.00	1.53
CGL27	Glendale Avenue	27th Avenue	*NO27	0.13	100%				CGL35	1.53	39%	GL27	0.26	0.98
CBH27	Bethany Home Road	27th Avenue	CGL27	0.98	100%							BH27	0.26	1.24
CBH35	Bethany Home Road	35th Avenue	CGL35	1.53	61%	CBH27	1.24	0%				BH35	1.01	1.94
CBH43	Bethany Home Road	43rd Avenue	CGL43	2.03	59%	CBH35	1.94	0%				BH43	0.99	2.19
CBH51	Bethany Home Road	51st Avenue	CGL51	2.91	47%	CBH43	2.19	49%				BH51	1.00	3.42
CGR59	Grand Avenue	59th Avenue	CGL59	3.91	22%	CBH51	3.42	53%				GR59	0.52	3.18
CIGR59	Grand Avenue	59th Avenue	CGL59	3.91	40%	CGR59	3.18	50%						3.15
CGR67	Grand Avenue	67th Avenue	CNO67	4.93	65%	CIGR59	3.15	100%				GR67	0.50	6.83
CPGL59	Glendale Avenue	59th Avenue				CGL59	3.91	20%	CGR59	3.18	20%			1.42
COW67	Orangewood Avenue	67th Avenue							CGR67	6.83	100%	OW67	0.12	6.95
COW75	Orangewood Avenue	75th Avenue	CNO75	8.93	48%	COW67	6.95	49%				OW75	0.50	8.17
COW83	Orangewood Avenue	83rd Avenue				COW75	8.17	24%				OW83	0.50	2.46
CGL67	Glendale Avenue	67th Avenue	COW67	6.95	51%	CGL59	3.91	14%				GL67	0.36	4.47
CGL75	Glendale Avenue	75th Avenue	COW75	8.17	76%	CGL67	4.47	51%				GL75	0.50	8.97
CGL83	Glendale Avenue	83rd Avenue	COW83	2.46	85%	CGL75	8.97	50%				GL83	0.50	7.11
CGL91	Glendale Avenue	91st Avenue	CNO91	9.52	53%	CGL83	7.11	37%	COW83	2.46	15%	GL91	0.98	9.02
CGLLO	Glendale Avenue	Loop 101	CNOLO	10.91	100%	CGL91	9.02	38%				GLLO	0.85	15.23
CIBHGR	Bethany Home Road	Grand Avenue				CBH51	3.42	16%	CGR59	3.18	50%			2.13
CBH59	Bethany Home Road	59th Avenue	CGL59	3.91	24%	CIBHGR	2.13	100%				BH59	0.49	3.58
CBH67	Bethany Home Road	67th Avenue	CGL67	4.47	49%	CBH59	3.58	58%				BH67	0.97	5.24
CBH75	Bethany Home Road	75th Avenue	CGL75	8.97	50%	CBH67	5.24	56%				BH75	1.00	8.42
CBH83	Bethany Home Road	83rd Avenue	CGL83	7.11	63%	CBH75	8.42	47%				BH83	0.99	9.47
CCB27	Camelback Road	27th Avenue	CBH27	1.24	100%							CB27	0.26	1.50
CCB35	Camelback Road	35th Avenue	CBH35	1.94	100%	CCB27	1.50	0%				CB35	1.00	2.94
CCB43	Camelback Road	43rd Avenue	CBH43	2.19	51%	CCB35	2.94	0%				CB43	1.00	2.12
CGR43	Grand Avenue	43rd Avenue	CBH51	3.42	32%	CCB43	2.12	32%				GR43	0.51	2.28
CICBGR	Camelback Road	Grand Avenue				CCB43	2.12	11%	CGR43	2.28	23%			0.74
CCB51	Camelback Road	51st Avenue				CICBGR	0.74	100%				CB51	0.48	1.23
CCB59	Camelback Road	59th Avenue	CBH59	3.58	42%	CCB51	1.23	49%				CB59	1.01	3.11
CCB67	Camelback Road	67th Avenue	CBH67	5.24	44%	CCB59	3.11	47%				CB67	0.97	4.73

Kimley-Horn and Associates, Inc.

Project: ***Glendale Stormwater Management Plan***
Subject: **Areas Contributing to Combination Points for Areal Reduction**
Model: **Maryvale**
Designed by: **MAF** Date 8/20/2009 KHA Project No. 091910009
Checked by: **AOM** Date 12/7/2009 City of Glendale No. 089017

Objective: To determine the area that will be contributing to each combination point so that areal reduction values will be correctly applied.

Area contributing to each combination point (for areal reduction). Percent of contributing area based on percent flow diverted each direction.

Combination Point ID[1]	E/W Boundary Name[2]	N/S Boundary Name[2]	Combination Point to North[3]			Combination Point to East[3]			Additional Combination Point[3]			Contributing Subbasin		Total Area[4] (sq mi)
			ID	Area (sq mi)	Percent Contribute	ID	Area (sq mi)	Percent Contribute	ID	Area (sq mi)	Percent Contribute	Subbasin ID	Area (sq mi)	
CCB75	Camelback Road	75th Avenue	CBH75	8.42	53%	CCB67	4.73	57%				CB75	1.00	8.14
CICB43	Camelback Road	43rd Avenue				CCB43	2.12	20%	CGR43	2.28	42%			1.40
CIS43	Indian School Road	43rd Avenue				CICB43	1.40	100%				IS43	0.47	1.87
CIS51	Indian School Road	51st Avenue	CCB51	1.23	51%	CIS43	1.87	17%				IS51	0.99	1.94
CIS59	Indian School Road	59th Avenue	CCB59	3.11	53%	CIS51	1.94	38%				IS59	1.01	3.38
CGC67	Grand Canal	67th Avenue	CCB67	4.73	43%	CIS59	3.38	40%				GC67	0.94	4.34
CIS27	Indian School Road	27th Avenue	CCB27	1.50	100%							IS27	0.24	1.74
CIS35	Indian School Road	35th Avenue	CCB35	2.94	100%	CIS27	1.74	0%				IS35	0.99	3.93
CIGR43	Grand Avenue	43rd Avenue	CCB43	2.12	37%		0.00	0%	CGR43	2.28	35%			1.58
CGR35	Grand Avenue	35th Avenue	CIGR43	1.58	100%	CIS35	3.93	0%				GR35	0.53	2.11
CIIS35	Indian School Road	35th Avenue	CGR35	2.11	52%				CIS35	3.93	25%			2.06
CGC35	Grand Canal	35th Avenue				CIIS35	2.06	100%				GC35	0.08	2.14
CGC43	Grand Canal	43rd Avenue	CIS43	1.87	83%	CGC35	2.14	15%				GC43	0.37	2.23
CGC51	Grand Canal	51st Avenue	CIS51	1.94	62%	CGC43	2.23	17%				GC51	0.45	2.04
CGC55	Grand Canal	55th Avenue	CIS59	3.38	60%							GC59	0.41	2.42
CGC53	Grand Canal	53rd Avenue				CGC51	2.04	53%	CGC55	2.42	49%			2.27
CPGC59	Grand Canal	59th Avenue				CGC55	2.42	51%						1.24
CPGC51	Grand Canal	51st Avenue	CGC53	2.27	50%	CGC51	2.04	50%						2.15
CGC59	Grand Canal	59th Avenue				CPGC59	1.24	100%	CGC53	2.27	100%			3.50
CISGC	Indian School Road	Grand Canal	CGC67	4.34	51%	CGC59	3.50	28%				ISGC	0.16	3.33
CGC75	Grand Canal	75th Avenue	CCB75	8.14	44%	CGC67	4.34	49%	CISGC	3.33	100%	GC75	0.41	9.44
CICB75	Camelback Road	75th Avenue	CCB75	8.14	56%	CGC75	9.44	100%						14.03
CGC83	Grand Canal	83rd Avenue	CBH83	9.47	34%	CICB75	14.03	100%				GC83	0.43	17.67
CIBH83	Bethany Home Road	83rd Avenue				CBH83	9.47	66%	CGC83	17.67	100%			23.92
CBH91	Bethany Home Road	91st Avenue	CGL91	9.02	62%	CIBH83	23.92	100%				BH91	0.98	30.45
CBHLO	Bethany Home Road	Loop 101	CGLLO	15.23	100%	CBH91	30.45	100%				BHLO	0.79	46.47
CBH99	Bethany Home Road	99th Avenue				CBHLO	46.47	100%				BH99	0.18	46.65
*GLNR	Glendale Avenue	New River					0.00	0%				GLNR	0.48	0.48
CBHRI	Bethany Home Road	Roosevelt Irrigation	*GLNR	0.48	0%	CBH99	46.65	100%				BHRI	0.51	47.17
CBHNR	Bethany Home Road	New River				CBHRI	47.17	100%				BHNR	0.26	47.42
*CB99	Camelback Road	99th Avenue					0.00	0%				CB99	0.20	0.20
CCBRI	Camelback Road	Roosevelt Irrigation				*CB99	0.20	51%				CBRI	0.70	0.80
CCB07	Camelback Road	107th Avenue				CCBRI	0.80	31%				CB07	0.32	0.56
CCBNR	Camelback Road	New River				CCB07	0.56	31%				CBNR	0.47	0.64
CIS99	Indian School Road	99th Avenue	*CB99	0.20	49%							IS99	0.32	0.42
CICB07	Camelback Road	107th Avenue	CCBRI	0.80	69%				CCB07	0.56	69%			0.94
CIS07	Indian School Road	107th Avenue	CICB07	0.94	100%	CIS99	0.42	74%				IS07	1.02	2.28
CISAF	Indian School Road	Agua Fria River				CIS07	2.28	75%				ISAF	0.99	2.69

Kimley-Horn and Associates, Inc.

Project: ***Glendale Stormwater Management Plan***
Subject: **Areas Contributing to Combination Points for Areal Reduction**
Model: **Maryvale**
Designed by: **MAF** Date 8/20/2009 KHA Project No. 091910009
Checked by: **AOM** Date 12/7/2009 City of Glendale No. 089017

Objective: To determine the area that will be contributing to each combination point so that areal reduction values will be correctly applied.

Area contributing to each combination point (for areal reduction). Percent of contributing area based on percent flow diverted each direction.

Combination Point ID[1]	E/W Boundary Name[2]	N/S Boundary Name[2]	Combination Point to North[3]			Combination Point to East[3]			Additional Combination Point[3]			Contributing Subbasin		Total Area[4] (sq mi)
			ID	Area (sq mi)	Percent Contribute	ID	Area (sq mi)	Percent Contribute	ID	Area (sq mi)	Percent Contribute	Subbasin ID	Area (sq mi)	
CTM99	Thomas Road	99th Avenue	CIS99	0.42	26%		0.00	0%				TM99	0.51	0.62
CRI07	Roosevelt Irrigation	107th Avenue	CIS07	2.28	25%	CTM99	0.62	54%				RI07	0.76	1.67
CRIAF	Roosevelt Irrigation	Agua Fria River				CRI07	1.67	19%				RIAF	0.66	0.98
CAF01	Agua Fria River		CCBNR	0.64	100%	CISAF	2.69	100%	CRIAF	0.98	100%			4.31
*CB83	Camelback Road	83rd Avenue					0.00	0%				CB83	0.56	0.56
CCB91	Camelback Road	91st Avenue				*CB83	0.56	56%				CB91	1.01	1.32
CCBLO	Camelback Road	Loop 101				CCB91	1.32	53%				CBLO	0.82	1.52
*IS75	Indian School Road	75th Avenue					0.00	0%				IS75	0.62	0.62
CIS83	Indian School Road	83rd Avenue	*CB83	0.56	44%	*IS75	0.62	65%				IS83	0.99	1.64
CIS91	Indian School Road	91st Avenue	CCB91	1.32	47%	CIS83	1.64	45%				IS91	1.00	2.36
CISLO	Indian School Road	Loop 101	CCBLO	1.52	100%	CIS91	2.36	43%				ISLO	0.68	3.22
CIGR35	Grand Avenue	35th Avenue	CIS35	3.93	75%	CGR35	2.11	48%						3.97
CGCGR	Grand Canal	Grand Avenue	CIS27	1.74	100%				CIGR35	3.97	100%	GCGR	0.38	6.09
CTM27	Thomas Road	27th Avenue	CGCGR	6.09	100%							GR27	0.41	6.50
CGR27	Grand Avenue	27th Avenue	CTM27	6.50	100%									6.50
CTM35	Thomas Road	35th Avenue	CGC35	2.14	85%	CGR27	6.50	32%				TM35	0.39	4.31
CTM43	Thomas Road	43rd Avenue	CGC43	2.23	83%	CTM35	4.31	16%				TM43	0.64	3.16
CTM51	Thomas Road	51st Avenue	CGC51	2.04	47%	CTM43	3.16	21%				TM51	0.55	2.15
CTM59	Thomas Road	59th Avenue	CGC59	3.50	72%	CTM51	2.15	36%				TM59	0.60	3.90
CTM67	Thomas Road	67th Avenue	CISGC	3.33	0%	CTM59	3.90	59%				TM67	0.81	3.12
CTM75	Thomas Road	75th Avenue	*IS75	0.62	35%	CTM67	3.12	55%				TM75	1.00	2.92
CTM83	Thomas Road	83rd Avenue	CIS83	1.64	55%	CTM75	2.92	52%				TM83	0.99	3.41
CTM91	Thomas Road	91st Avenue	CIS91	2.36	57%	CTM83	3.41	77%				TM91	1.00	4.96
CTMLO	Thomas Road	Loop 101	CISLO	3.22	100%	CTM91	4.96	23%				TMLO	0.50	4.87
CMD27	McDowell Road	27th Avenue	CGR27	6.50	68%							MD27	0.24	4.65
CMD35	McDowell Road	35th Avenue	CTM35	4.31	84%	CMD27	4.65	100%				MD35	1.00	9.29
CMD43	McDowell Road	43rd Avenue	CTM43	3.16	79%	CMD35	9.29	37%				MD43	1.00	6.96
CMD51	McDowell Road	51st Avenue	CTM51	2.15	64%	CMD43	6.96	0%				MD51	1.00	2.37
CMD59	McDowell Road	59th Avenue	CTM59	3.90	41%	CMD51	2.37	61%				MD59	1.01	4.05
CMD67	McDowell Road	67th Avenue	CTM67	3.12	45%	CMD59	4.05	50%				MD67	0.98	4.41
CMD75	McDowell Road	75th Avenue	CTM75	2.92	48%	CMD67	4.41	85%				MD75	1.00	6.14
CMD83	McDowell Road	83rd Avenue	CTM83	3.41	23%	CMD75	6.14	65%				MD83	0.99	5.80
CMD91	McDowell Road	91st Avenue	CTM91	4.96	77%	CMD83	5.80	100%				MD91	1.01	10.61
CMDLO	McDowell Road	Loop 101	CTMLO	4.87	100%	CMD91	10.61	80%				MDLO	0.67	14.07
*IN27	Interstate 10	27th Avenue										IN27	0.11	0.11
CIN35	Interstate 10	35th Avenue	CMD35	9.29	63%	*IN27	0.11	28%				IN35	0.24	6.11
CIN43	Interstate 10	43rd Avenue	CMD43	6.96	100%	CIN35	6.11	13%				IN43	0.26	7.99
CIN51	Interstate 10	51st Avenue	CMD51	2.37	39%	CIN43	7.99	19%				IN51	0.23	2.68

Kimley-Horn and Associates, Inc.

Project: ***Glendale Stormwater Management Plan***
Subject: **Areas Contributing to Combination Points for Areal Reduction**
Model: **Maryvale**
Designed by: **MAF** Date 8/20/2009 KHA Project No. 091910009
Checked by: **AOM** Date 12/7/2009 City of Glendale No. 089017

Objective: To determine the area that will be contributing to each combination point so that areal reduction values will be correctly applied.

Area contributing to each combination point (for areal reduction). Percent of contributing area based on percent flow diverted each direction.

Combination Point ID[1]	E/W Boundary Name[2]	N/S Boundary Name[2]	Combination Point to North[3]			Combination Point to East[3]			Additional Combination Point[3]			Contributing Subbasin		Total Area[4] (sq mi)
			ID	Area (sq mi)	Percent Contribute	ID	Area (sq mi)	Percent Contribute	ID	Area (sq mi)	Percent Contribute	Subbasin ID	Area (sq mi)	
CIN59	Interstate 10	59th Avenue	CMD59	4.05	50%	CIN51	2.68	100%				IN59	0.20	4.90
CIN67	Interstate 10	67th Avenue	CMD67	4.41	15%	CIN59	4.90	100%				IN67	0.20	5.78
CIN75	Interstate 10	75th Avenue	CMD75	6.14	35%	CIN67	5.78	100%				IN75	0.20	8.11
CIN83	Interstate 10	83rd Avenue				CIN75	8.11	100%				IN83	0.20	8.31
CIN91	Interstate 10	91st Avenue	CMD91	10.61	20%	CIN83	8.31	100%				IN91	0.19	10.57
CINLO	Interstate 10	Loop 101	CMDLO	14.07	100%	CIN91	10.57	100%				INLO	0.15	24.79
CTM07	Thomas Road	107th Avenue	CRI07	1.67	81%							TM07	0.27	1.61
CMD99	McDowell Road	99th Avenue	CTM99	0.62	46%							MD99	0.32	0.60
CTMRI	Thomas Road	Roosevelt Irrigation				CMD99	0.60	44%				TMRI	0.24	0.51
CMD07	McDowell Road	107th Avenue	CTM07	1.61	65%	CMD99	0.60	28%	CTMRI	0.51	100%	MD07	0.78	2.50
CIN07	Interstate 10	107th Avenue	CMD07	2.50	75%	CINLO	24.79	100%	CMD99	0.60	28%	IN07	0.26	27.09
CTMAF	Thomas Road	Agua Fria River				CTM07	1.61	35%				TMAF	0.76	1.33
CMDAV	McDowell Road	Avondale Boulevard	CTMAF	1.33	11%	CMD07	2.50	25%				MDAV	0.95	1.72
CINAV	Interstate 10	Avondale Boulevard	CMDAV	1.72	73%	CIN07	27.09	100%				INAV	0.24	28.58
CMDAF	McDowell Road	Agua Fria River				CMDAV	1.72	27%				MDAF	0.83	1.30
CINAF	Interstate 10	Agua Fria River	CMDAF	1.30	24%	CINAV	28.58	100%				INAF	0.47	29.36

Notes:

1. Corresponds to the KK card in HEC-1. Subbasins that do not have a corresponding combination point are marked with an asterisk (*).
2. Correspond to streets or watercourse downstream of Combination Point ID.
3. Combination point directly upstream of the "Combination Point ID". The percent of this combination point that will contribute to the "Combination Point ID" is determined by the diversion.
4. The total area contributing to each combination point is determined by summing the percent of area of the upstream combination point that is being diverted as surface flow plus the subbasin that contributes directly to the combination point. Some combination points may not have a subbasin contributing directly to them. Some subbasins do not contribute directly to a combination point. To account for the area for these subbasins they are included in the table and marked with an asterisk (*). For example, there is not a combination point for surface flow at the I-10 and 27th Avenue (IN27). The area for IN27 is recorded in the table under *IN27.

Kimley-Horn and Associates, Inc.

Project: ***Glendale Stormwater Management Plan***
Subject: **Areas Contributing to Combination Points for Areal Reduction for the Existing Conditions Model**
Model: **Glendale/Peoria**
Designed by: **MAF** Date 12/21/2009
Checked by: **AOM** Date 1/18/2010

KHA Project No. 091910009
City of Glendale No. 089017

Objective: To determine the area that will be contributing to each combination point so that areal reduction values will be correctly applied.

Area contributing to each combination point (for areal reduction). Percent of contributing area based on percent flow diverted each direction.

			Combination Point to North / A			Combination Point to East / B			Combination Point C			Combination Point D					
Combination Point ID[1]	E/W Boundary Name[2]	N/S Boundary Name[2]	ID	Area (sq mi)	Percent Contribute	ID	Area (sq mi)	Percent Contribute	ID	Area (sq mi)	Percent Contribute	ID	Area (sq mi)	Percent Contribute	Subbasin ID	Subbasin Area (sq mi)	Total Area (sq mi)
*UH35	Union Hills Drive	35th Avenue													UH35	1.136	1.14
CBL35	Bell Road	35th Avenue	*UH35	1.14	49%										BL35	1.139	1.70
CGW35	Greenway Road	35th Avenue	CBL35	1.70	34%										GW35	1.008	1.58
CTB35	Thunderbird Road	35th Avenue	CGW35	1.58	42%										TB35	0.976	1.65
CCT35	Cactus Road	35th Avenue	CTB35	1.65	48%										CT35	0.976	1.76
CPE35	Peoria Avenue	35th Avenue	CCT35	1.76	42%										PE35	0.977	1.71
CAC01	ACDC	35th Avenue	CPE35	1.71	30%										AC35	0.755	1.27
CUH43	Union Hills Drive	43rd Avenue				*UH35	1.14	51%							UH43	1.025	1.60
CBL43	Bell Road	43rd Avenue	CUH43	1.60	58%	CBL35	1.70	66%							BL43	1.049	3.10
CGW43	Greenway Road	43rd Avenue	CBL43	3.10	54%	CGW35	1.58	58%							GW43	0.987	3.57
CTB43	Thunderbird Road	43rd Avenue	CGW43	3.57	47%	CTB35	1.65	52%							TB43	0.995	3.55
CCT43	Cactus Road	43rd Avenue	CTB43	3.55	37%	CCT35	1.76	58%							CT43	0.996	3.35
CPE43	Peoria Avenue	43rd Avenue	CCT43	3.35	37%	CPE35	1.71	70%							PE43	0.997	3.42
CAC02	ACDC	43rd Avenue	CPE43	3.42	62%	CAC01	1.27	100%							AC43	0.362	3.75
CUH51	Union Hills Drive	51st Avenue				CUH43	1.60	42%							UH51	0.990	1.66
CBL51	Bell Road	51st Avenue	CUH51	1.66	39%	CBL43	3.10	46%							BL51	1.045	3.12
CGW51	Greenway Road	51st Avenue	CBL51	3.12	48%	CGW43	3.57	53%							GW51	0.962	4.34
CTB51	Thunderbird Road	51st Avenue	CGW51	4.34	35%	CTB43	3.55	63%							TB51	0.990	4.70
CCT51	Cactus Road	51st Avenue	CTB51	4.70	39%	CCT43	3.35	63%							CT51	0.988	4.94
CAC03	ACDC	51st Avenue	CCT51	4.94	67%	CAC02	3.75	100%	CPE43	3.42	38%				AC51	0.576	8.95
CBL59	Bell Road	59th Avenue				CBL51	3.12	52%							BL59	1.075	2.71
CGW59	Greenway Road	59th Avenue	CBL59	2.71	69%	CGW51	4.34	65%							GW59	0.944	5.64
CTB59	Thunderbird Road	59th Avenue	CGW59	5.64	55%	CTB51	4.70	61%							TB59	0.995	6.96
CAC04	ACDC	59th Avenue	CTB59	6.96	59%	CAC03	8.95	100%	CCT51	4.94	33%				AC59	0.742	15.39
CBL67	Bell Road	67th Avenue				CBL59	2.71	8%							BL67	0.233	0.46
CGW67	Greenway Road	67th Avenue	CBL67	0.46	42%	CGW59	5.64	45%							GW67	0.892	3.64
CAC05	ACDC	67th Avenue	CGW67	3.64	18%	CAC04	15.39	100%	CTB59	6.96	41%				AC67	0.698	19.62
CAC06	ACDC	75th Avenue				CAC05	19.62	100%	CGW67	3.64	82%				AC75	0.842	23.44
*HV55	Happy Valley Road	55th Avenue						0%							HV55	2.054	2.05
CCL57	Calle Lejos	57th Avenue	*HV55	2.05	100%			0%							CL57	0.746	2.80
CWL59	Williams Road	59th Avenue	CCL57	2.80	100%			0%							WL59	0.562	3.36
CDV56	Deer Valley Road	56th Avenue	CWL59	3.36	100%			0%							DV56	0.287	3.65
CLO51	Loop 101	51st Avenue	CDV56	3.65	100%			0%							LO51	1.130	4.78
CSK01	Union Hills Drive	Skunk Creek	CLO51	4.78	100%	CUH51	1.66	61%							UHSK	0.933	6.73
CPSK02	Skunk Creek	67th Avenue	CSK01	6.73	100%	CBL59	2.71	23%							SK67	0.942	8.30
*UH67	Union Hills Drive	67th Avenue													UH67	0.784	0.78
CUH75	Union Hills Drive	75th Avenue	*UH67	0.78	100%										UH75	0.814	1.60
CSK03	Bell Road	75th Avenue	CUH75	1.60	100%	CPSK02	8.30	100%	CBL67	0.46	58%				BL75	1.063	11.22
*UHLO	Union Hills Drive	Loop 101													UHLO	0.822	0.82
CBLLO	Bell Road	Loop 101	*UHLO	0.82	100%										BLLO	0.765	1.59
CSK04	Greenway Road	Loop 101	CSK03	11.22	100%	CAC06	23.44	100%	CBLLO	1.59	100%				GWLO	0.814	37.07
*JM63	Jomax Road	63rd Avenue													JM63	0.840	0.84
CJM67	Jomax Road	67th Avenue	*JM63	0.84	100%										JM67	0.381	1.22
CHV75	Happy Valley Road	75th Avenue	CJM67	1.22	100%										HV75	0.958	2.18
*JM75	Jomax Road	75th Avenue													JM75	1.112	1.11
*JM76	Jomax Road	76th Avenue													JM76	0.169	0.17

Kimley-Horn and Associates, Inc.

Project: ***Glendale Stormwater Management Plan***
Subject: **Areas Contributing to Combination Points for Areal Reduction for the Existing Conditions Model**
Model: **Glendale/Peoria**
Designed by: **MAF** Date 12/21/2009
Checked by: **AOM** Date 1/18/2010

KHA Project No. 091910009
City of Glendale No. 089017

Objective: To determine the area that will be contributing to each combination point so that areal reduction values will be correctly applied.

Area contributing to each combination point (for areal reduction). Percent of contributing area based on percent flow diverted each direction.

			Combination Point to North / A			Combination Point to East / B			Combination Point C			Combination Point D					
Combination Point ID[1]	E/W Boundary Name[2]	N/S Boundary Name[2]	ID	Area (sq mi)	Percent Contribute	ID	Area (sq mi)	Percent Contribute	ID	Area (sq mi)	Percent Contribute	ID	Area (sq mi)	Percent Contribute	Subbasin ID	Subbasin Area (sq mi)	Total Area (sq mi)
*JM80	Jomax Road	80th Avenue													JM80	0.164	0.16
CNR01	Jomax Road	New River	*JM76	0.17	100%	*JM80	0.16	100%							JMNR	0.149	0.48
CNR02	Happy Valley Road	New River	CNR01	0.48	100%	*JM75	1.11	100%	CHV75	2.18	100%				HVNR	0.202	3.98
*HV67	Happy Valley Road	67th Avenue													HV67	0.544	0.54
CCL67	Calle Lejos	67th Avenue	*HV67	0.54	100%										CL67	0.275	0.82
*PP67	Pinnacle Peak Road	67th Avenue													PP67	0.096	0.10
CPP73	Pinnacle Peak Road	73rd Avenue	CCL67	0.82	100%	*PP67	0.10	68%							PP73	0.545	1.43
*PP75	Pinnacle Peak Road	75th Avenue													PP75	0.420	0.42
CNR03	Pinnacle Peak Road	New River	CNR02	3.98	100%	*PP75	0.42	100%	CPP73	1.43	59%				PPNR	0.237	5.47
CWL67	Williams Road	67th Avenue	*PP67	0.10	32%										WL67	0.103	0.13
CWL75	Williams Road	75th Avenue	CWL67	0.13	100%	CPP73	1.43	41%							WL75	0.475	1.20
*WWBR	Westwing Parkway	Black Rock													WWBR	0.184	0.18
CWWRS	Westwing Parkway	Rock Springs Wash	*WWBR	0.18	100%										WWRS	0.144	0.33
CJMRS	Jomax Road	Rock Springs Wash	CWWRS	0.33	100%										JMRS	0.567	0.90
*83RS	83rd Avenue	Rock Springs Wash													83RS	0.638	0.64
CHVRS	Happy Valley Road	Rock Springs Wash	*83RS	0.64	100%	CJMRS	0.90	100%							HVRS	0.630	2.16
*HV83	Happy Valley Road	83rd Avenue													HV83	0.035	0.04
CCL77	Calle Lejos	77th Avenue	*HV83	0.04	100%	CHVRS	2.16	100%							CL77	0.316	2.51
CPP77	Pinnacle Peak Road	77th Avenue	CCL77	2.51	100%										PP77	0.270	2.78
CNR04	Williams Road	New River	CPP77	2.78	100%	CNR03	5.47	100%	CWL75	1.20	100%				WLNR	0.390	9.84
*DV75	Deer Valley Road	75th Avenue													DV75	0.501	0.50
CNR05	Deer Valley Road	New River	CNR04	9.84	100%	*DV75	0.50	50%							DVNR	0.401	10.50
*DV67	Deer Valley Road	67th Avenue													DV67	0.503	0.50
CLO67	Loop 101	67th Avenue	*DV67	0.50	100%										LO67	1.217	1.72
CLO75	Loop 101	75th Avenue	CLO67	1.72	100%										LO75	0.970	2.69
CILO75	Loop 101	75th Avenue	*DV75	0.50	50%	CLO75	2.69	100%									2.94
*PP81	Pinnacle Peak Road	81st Avenue													PP81	0.197	0.20
CWL83	Williams Road	83rd Avenue	*PP81	0.20	100%										WL83	0.125	0.32
*HV87	Happy Valley Road	87th Avenue													HV87	0.285	0.29
CPP87	Pinnacle Peak Road	87th Avenue	*HV87	0.29	100%										PP87	0.981	1.27
*PP91	Pinnacle Peak Road	91st Avenue													PP91	0.161	0.16
CDV83	Deer Valley Road	83rd Avenue	CWL83	0.32	100%										DV83	0.107	0.43
CNR06	Beardsley Road	New River	CDV83	0.43	100%	CNR05	10.50	100%	CILO75	2.94	100%				BYNR	1.034	14.90
CDV87	Deer Valley Road	87th Avenue	CPP87	1.27	100%										DV87	1.004	2.27
CBY87	Beardsley Road	87th Avenue	CDV87	2.27	100%										BY87	0.959	3.23
CUH87	Union Hills Drive	87th Avenue	CBY87	3.23	100%										UH87	0.998	4.23
CNR07	Union Hills Drive	New River	CNR06	14.90	100%										UHNR	0.386	15.29
CNR08	Bell Road	New River	CNR07	15.29	100%	CUH87	4.23	41%							BLNR	0.603	17.63
CRG93	Rose Garden Lane	93rd Avenue	*PP91	0.16	100%										RG93	0.248	0.41
CBY91	Beardsley Road	91st Avenue	CRG93	0.41	50%										BY91	0.501	0.71
CUH91	Union Hills Drive	91st Avenue	CBY91	0.71	100%										UH91	0.929	1.63
CIUH91	Union Hills Drive	91st Avenue	CUH91	1.63	100%	CUH87	4.23	59%								0.000	4.12
CBL91	Bell Road	91st Avenue	CIUH91	4.12	100%										BL91	0.901	5.02
CPNR08	Bell Road	New River	CNR08	17.63	100%											0.000	17.63
CGW91	Greenway Road	91st Avenue	CBL91	5.02	58%										GW91	0.477	3.40
CNR09	Greenway Road	New River	CPNR08	17.63	100%	CSK04	37.07	100%	CGW91	3.40	50%	CBL91	5.02	42%	GWNR	0.696	59.19

Kimley-Horn and Associates, Inc.

Project: ***Glendale Stormwater Management Plan***
Subject: **Areas Contributing to Combination Points for Areal Reduction for the Existing Conditions Model**
Model: **Glendale/Peoria**
Designed by: **MAF** Date 12/21/2009
Checked by: **AOM** Date 1/18/2010

KHA Project No. 091910009
City of Glendale No. 089017

Objective: To determine the area that will be contributing to each combination point so that areal reduction values will be correctly applied.

Area contributing to each combination point (for areal reduction). Percent of contributing area based on percent flow diverted each direction.

			Combination Point to North / A			Combination Point to East / B			Combination Point C			Combination Point D					
Combination Point ID[1]	E/W Boundary Name[2]	N/S Boundary Name[2]	ID	Area (sq mi)	Percent Contribute	ID	Area (sq mi)	Percent Contribute	ID	Area (sq mi)	Percent Contribute	ID	Area (sq mi)	Percent Contribute	Subbasin ID	Subbasin Area (sq mi)	Total Area (sq mi)
CNR10	Thunderbird Road	New River	CNR09	59.19	100%	CGW91	3.40	50%							TBNR	1.123	62.01
*HV93	Happy Valley Road	93rd Avenue													HV93	0.172	0.17
CPPLP	Pinnacle Peak Road	Lake Pleasant Boulevard	*HV93	0.17	58%										PPLP	0.885	0.98
CDV99	Deer Valley Road	99th Avenue	CPPLP	0.98	67%										DV99	1.217	1.88
CRGLP	Rose Garden Lane	Lake Pleasant Boulevard	CDV99	1.88	100%	CRG93	0.41	50%							RGLP	0.410	2.49
CBY07	Beardsley Road	107th Avenue	CRGLP	2.49	50%		0.00	0%							BY07	0.513	1.76
CUH99	Union Hills Drive	99th Avenue	CBY07	1.76	50%										UH99	0.563	1.44
*UH97	Union Hills Drive	97th Avenue													UH97	0.272	0.27
CDW99	Del Webb Boulevard	99th Avenue	CUH99	1.44	100%	*UH97	0.27	100%							DW99	0.155	1.87
CBL99	Bell Road	99th Avenue	CDW99	1.87	50%										BL99	1.133	2.07
CBN99	Burns Drive	99th Avenue	CBL99	2.07	100%										BN99	1.037	3.10
CTB99	Thunderbird Road	99th Avenue	CBN99	3.10	100%										TB99	0.976	4.08
CDW07	Del Webb Boulevard	107th Avenue	CDW99	1.87	50%										DW07	0.484	1.42
CTL07	Talisman	107th Avenue	CDW07	1.42	50%										TL07	0.580	1.29
*RO99	Royal Oak	99th Avenue													RO99	0.414	0.41
CGR99	Grand Avenue	99th Avenue	CTL07	1.29	100%	*RO99	0.41	100%							GR99	1.309	3.01
CNR11	Grand Avenue	New River	CTB99	4.08	100%	CNR10	62.01	100%	CGR99	3.01	100%				GRNR	0.947	70.05
*PE99	Peoria Avenue	99th Avenue													PE99	0.294	0.29
*PENR	Peoria Avenue	New River													PENR	0.197	0.20
CNR12	Peoria Avenue	97th Avenue	CNR11	70.05	100%	*PE99	0.29	70%	*PENR	0.20	56%				PE97	0.560	70.93
*PE11	Peoria Avenue	111th Avenue													PE11	0.924	0.92
*PE07	Peoria Avenue	107th Avenue													PE07	0.575	0.58
*PE03	Peoria Avenue	103rd Avenue													PE03	0.409	0.41
COL03	Olive Avenue	103rd Avenue	*PE11	0.92	100%	*PE07	0.58	100%	*PE03	0.41	100%				OL03	1.099	3.01
COLNR	Olive Avenue	New River	*PENR	0.20	44%										OLNR	0.696	0.78
CNR13	Olive Avenue	99th Avenue	*PE99	0.29	30%	COL03	3.01	100%	CNR12	70.93	100%	COLNR	0.78	67%	OL99	0.436	74.98
CNONR	Northern Avenue	New River	COLNR	0.78	33%										NONR	0.830	1.09
CNR14	Northern Avenue	99th Avenue	CNR13	74.98	100%	CNONR	1.09	100%							NO99	0.858	76.93
CNR15	Glendale Avenue	103rd Avenue	CNR14	76.93	100%										GL03	0.649	77.58
*GLGH	Glendale Avenue	Glen Harbor Boulevard													GLGH	0.079	0.08
CNR16	Glen Harbor Boulevard	New River	*GLGH	0.08	100%	CNR15	77.58	100%							GHNR	0.841	78.50
*AF11	Agua Fria River	111th Avenue													AF11	0.375	0.38
*GHAF	Glen Harbor Boulevard	Agua Fria River													GHAF	0.563	0.56
CAF06	Agua Fria River		CNR16	78.50	100%	*AF11	0.38	100%	*GHAF	0.56	100%					0.000	79.44
*JMAF	Jomax Road	Agua Fria River													JMAF	0.147	0.15
*HV07	Happy Valley Road	107th Avenue													HV07	0.304	0.30
*HVAF	Happy Valley Road	Agua Fria River													HVAF	0.215	0.22
*JM99	Jomax Road	99th Avenue													JM99	0.568	0.57
*WWLP	Westwing Parkway	Lake Pleasant Boulevard													WWLP	0.136	0.14
CJMLP	Jomax Road	Lake Pleasant Boulevard	*JM99	0.57	100%	*WWLP	0.14	100%							JMLP	0.705	1.41
*YLLP	Yearling	Lake Pleasant Boulevard													YLLP	0.595	0.60
CHVLP	Happy Valley Road	Lake Pleasant Boulevard	*HV93	0.17	42%										HVLP	0.198	0.27
CHV01	Happy Valley Road	101st Avenue	CJMLP	1.41	100%	*YLLP	0.60	100%	CHVLP	0.27	100%				HV01	0.444	2.72
*CL07	Calle Lejos	107th Avenue													CL07	0.524	0.52
CCLAF	Calle Lejos	Agua Fria River	CHV01	2.72	100%	*CL07	0.52	88%							CLAF	0.289	3.47
CAF01	Agua Fria River		*JMAF	0.15	100%	*HV07	0.30	100%	*HVAF	0.22	100%	CCLAF	3.47	100%		0.000	4.13

Kimley-Horn and Associates, Inc.

Project: ***Glendale Stormwater Management Plan***
Subject: **Areas Contributing to Combination Points for Areal Reduction for the Existing Conditions Model**
Model: **Glendale/Peoria**
Designed by: **MAF** Date 12/21/2009 KHA Project No. 091910009
Checked by: **AOM** Date 1/18/2010 City of Glendale No. 089017

Objective: To determine the area that will be contributing to each combination point so that areal reduction values will be correctly applied.

Area contributing to each combination point (for areal reduction). Percent of contributing area based on percent flow diverted each direction.

			Combination Point to North / A			Combination Point to East / B			Combination Point C			Combination Point D					
Combination Point ID[1]	E/W Boundary Name[2]	N/S Boundary Name[2]	ID	Area (sq mi)	Percent Contribute	ID	Area (sq mi)	Percent Contribute	ID	Area (sq mi)	Percent Contribute	ID	Area (sq mi)	Percent Contribute	Subbasin ID	Subbasin Area (sq mi)	Total Area (sq mi)
CPP03	Pinnacle Peak Road	103rd Avenue	*CL07	0.52	12%	CPPLP	0.98	0%							PP03	0.325	0.39
CPP07	Pinnacle Peak Road	107th Avenue	CPP03	0.39	0%										PP07	0.195	0.20
CDVAF	Deer Valley Road	Agua Fria River	CPP07	0.20	100%										DVAF	0.412	0.61
*PPAF	Pinnacle Peak Road	Agua Fria River													PPAF	0.270	0.27
CAF02	Agua Fria River		*PPAF	0.27	100%	CDVAF	0.61	100%								0.000	0.88
CDV07	Deer Valley Road	107th Avenue	CPP03	0.39	100%										DV07	0.645	1.03
CDVLP	Deer Valley Road	Lake Pleasant Boulevard	CPPLP	0.98	33%										DVLP	0.136	0.46
CRG07	Rose Garden Lane	107th Avenue	CDV07	1.03	100%	CDVLP	0.46	100%	CRGLP	2.49	50%				RG07	0.350	3.09
CRGAF	Rose Garden Lane	Agua Fria River	CRG07	3.09	100%										RGAF	0.332	3.42
CBYAF	Beardsley Road	Agua Fria River	CBY07	1.76	50%										BYAF	0.609	1.49
*UHAF	Union Hills Drive	Agua Fria River													UHAF	0.489	0.49
CAF03	Agua Fria River		CRGAF	3.42	100%	CBYAF	1.49	100%	*UHAF	0.49	100%					0.000	5.40
*UH07	Union Hills Drive	107th Avenue													UH07	0.252	0.25
CUH15	Union Hills Drive	115th Avenue	*UH07	0.25	100%										UH15	1.019	1.27
CBL15	Bell Road	115th Avenue	CUH15	1.27	100%	CDW07	1.42	50%							BL15	0.962	2.94
CMEAF	Meade Drive	Agua Fria River	CBL15	2.94	100%										MEAF	1.369	4.31
*BLAF	Bell Road	Agua Fria River													BLAF	0.283	0.28
*GRAF	Grand Avenue	Agua Fria River													GRAF	0.859	0.86
*PEAF	Peoria Avenue	Agua Fria River													PEAF	0.531	0.53
CAF04	Agua Fria River		CMEAF	4.31	100%	*BLAF	0.28	100%	*GRAF	0.86	100%	*PEAF	0.53	100%		0.000	5.98
*OL11	Olive Avenue	111th Avenue													OL11	0.339	0.34
CNO11	Northern Avenue	111th Avenue	*OL11	0.34	100%										NO11	0.860	1.20
*NO07	Northern Avenue	107th Avenue													NO07	0.340	0.34
CGL11	Glendale Avenue	111th Avenue	*NO07	0.34	100%										GL11	0.426	0.77
CGL14	Glendale Avenue	114th Avenue	CNO11	1.20	100%	CGL11	0.77	100%							GL14	0.481	2.45
CGLAF	Glendale Avenue	Agua Fria River	CGL14	2.45	100%										GLAF	0.388	2.83
*OLAF	Olive Avenue	Agua Fria River													OLAF	1.026	1.03
*NOAF	Northern Avenue	Agua Fria River													NOAF	0.285	0.29
CAF05	Agua Fria River		CGLAF	2.83	100%	*OLAF	1.03	100%	*NOAF	0.29	100%					0.000	4.15

Notes:

1. Corresponds to the KK card in HEC-1. Subbasins that do not have a corresponding combination point are marked with an asterisk (*).
2. Correspond to streets or watercourse downstream of Combination Point ID.
3. Combination point directly upstream of the "Combination Point ID". The percent of this combination point that will contribute to the "Combination Point ID" is determined by the diversion.
4. The total area contributing to each combination point is determined by summing the percent of area of the upstream combination point that is being diverted as surface flow plus the subbasin that contributes directly to the combination point. Some combination points may not have a subbasin co to them. Some subbasins do not contribute directly to a combination point. To account for the area for these subbasins they are included in the table and marked with an asterisk (*). For example, there is not a combination point for surface flow at the I-10 and 27th Avenue (IN27). The area for in the table under *IN27.

Kimley-Horn and Associates, Inc.

Project: ***Glendale Stormwater Management Plan***
Subject: **Areas Contributing to Combination Points for Areal Reduction for the Future Conditions Model**
Model: **Glendale/Peoria**
Designed by: **MAF** Date 12/21/2009
Checked by: **AOM** Date 1/18/2010

KHA Project No. 091910009
City of Glendale No. 089017

Objective: To determine the area that will be contributing to each combination point so that areal reduction values will be correctly applied.

Area contributing to each combination point (for areal reduction). Percent of contributing area based on percent flow diverted each direction.

			Combination Point to North / A			Combination Point to East / B			Combination Point C			Combination Point D					
Combination Point ID[1]	E/W Boundary Name[2]	N/S Boundary Name[2]	ID	Area (sq mi)	Percent Contribute	ID	Area (sq mi)	Percent Contribute	ID	Area (sq mi)	Percent Contribute	ID	Area (sq mi)	Percent Contribute	Subbasin ID	Subbasin Area (sq mi)	Total Area (sq mi)
*UH35	Union Hills Drive	35th Avenue													UH35	1.136	1.14
CBL35	Bell Road	35th Avenue	*UH35	1.14	49%										BL35	1.139	1.70
CGW35	Greenway Road	35th Avenue	CBL35	1.70	34%										GW35	1.008	1.58
CTB35	Thunderbird Road	35th Avenue	CGW35	1.58	42%										TB35	0.976	1.65
CCT35	Cactus Road	35th Avenue	CTB35	1.65	48%										CT35	0.976	1.76
CPE35	Peoria Avenue	35th Avenue	CCT35	1.76	42%										PE35	0.977	1.71
CAC01	ACDC	35th Avenue	CPE35	1.71	30%										AC35	0.755	1.27
CUH43	Union Hills Drive	43rd Avenue				*UH35	1.14	51%							UH43	1.025	1.60
CBL43	Bell Road	43rd Avenue	CUH43	1.60	58%	CBL35	1.70	66%							BL43	1.049	3.10
CGW43	Greenway Road	43rd Avenue	CBL43	3.10	54%	CGW35	1.58	58%							GW43	0.987	3.57
CTB43	Thunderbird Road	43rd Avenue	CGW43	3.57	47%	CTB35	1.65	52%							TB43	0.995	3.55
CCT43	Cactus Road	43rd Avenue	CTB43	3.55	37%	CCT35	1.76	58%							CT43	0.996	3.35
CPE43	Peoria Avenue	43rd Avenue	CCT43	3.35	37%	CPE35	1.71	70%							PE43	0.997	3.42
CAC02	ACDC	43rd Avenue	CPE43	3.42	62%	CAC01	1.27	100%							AC43	0.362	3.75
CUH51	Union Hills Drive	51st Avenue				CUH43	1.60	42%							UH51	0.990	1.66
CBL51	Bell Road	51st Avenue	CUH51	1.66	39%	CBL43	3.10	46%							BL51	1.045	3.12
CGW51	Greenway Road	51st Avenue	CBL51	3.12	48%	CGW43	3.57	53%							GW51	0.962	4.34
CTB51	Thunderbird Road	51st Avenue	CGW51	4.34	35%	CTB43	3.55	63%							TB51	0.990	4.70
CCT51	Cactus Road	51st Avenue	CTB51	4.70	39%	CCT43	3.35	63%							CT51	0.988	4.94
CAC03	ACDC	51st Avenue	CCT51	4.94	67%	CAC02	3.75	100%	CPE43	3.42	38%				AC51	0.576	8.95
CBL59	Bell Road	59th Avenue				CBL51	3.12	52%							BL59	1.075	2.71
CGW59	Greenway Road	59th Avenue	CBL59	2.71	69%	CGW51	4.34	65%							GW59	0.944	5.64
CTB59	Thunderbird Road	59th Avenue	CGW59	5.64	55%	CTB51	4.70	61%							TB59	0.995	6.96
CAC04	ACDC	59th Avenue	CTB59	6.96	59%	CAC03	8.95	100%	CCT51	4.94	33%				AC59	0.742	15.39
CBL67	Bell Road	67th Avenue				CBL59	2.71	8%							BL67	0.233	0.46
CGW67	Greenway Road	67th Avenue	CBL67	0.46	42%	CGW59	5.64	45%							GW67	0.892	3.64
CAC05	ACDC	67th Avenue	CGW67	3.64	18%	CAC04	15.39	100%	CTB59	6.96	41%				AC67	0.698	19.62
CAC06	ACDC	75th Avenue				CAC05	19.62	100%	CGW67	3.64	82%				AC75	0.842	23.44
*HV55	Happy Valley Road	55th Avenue													HV55	2.054	2.05
CCL57	Calle Lejos	57th Avenue	*HV55	2.05	100%										CL57	0.746	2.80
CWL59	Williams Road	59th Avenue	CCL57	2.80	100%										WL59	0.562	3.36
CDV56	Deer Valley Road	56th Avenue	CWL59	3.36	100%										DV56	0.287	3.65
CLO51	Loop 101	51st Avenue	CDV56	3.65	100%										LO51	1.130	4.78
CSK01	Union Hills Drive	Skunk Creek	CLO51	4.78	100%	CUH51	1.66	61%							UHSK	0.933	6.73
CSK02	Skunk Creek	67th Avenue	CSK01	6.73	100%	CBL59	2.71	23%							SK67	0.942	8.30
*UH67	Union Hills Drive	67th Avenue													UH67	0.784	0.78
CUH75	Union Hills Drive	75th Avenue	*UH67	0.78	100%										UH75	0.814	1.60
CSK03	Bell Road	75th Avenue	CUH75	1.60	100%	CSK02	8.30	100%	CBL67	0.46	58%				BL75	1.063	11.22
*UHLO	Union Hills Drive	Loop 101													UHLO	0.822	0.82
CBLLO	Bell Road	Loop 101	*UHLO	0.82	100%										BLLO	0.765	1.59
CSK04	Greenway Road	Loop 101	CSK03	11.22	100%	CAC06	23.44	100%	CBLLO	1.59	100%				GWLO	0.814	37.07
*JM63	Jomax Road	63rd Avenue													JM63	0.840	0.84
CJM67	Jomax Road	67th Avenue	*JM63	0.84	100%										JM67	0.381	1.22
CHV75	Happy Valley Road	75th Avenue	CJM67	1.22	100%										HV75	0.958	2.18
*JM75	Jomax Road	75th Avenue													JM75	1.112	1.11
*JM76	Jomax Road	76th Avenue													JM76	0.169	0.17

Kimley-Horn and Associates, Inc.

Project: ***Glendale Stormwater Management Plan***
Subject: **Areas Contributing to Combination Points for Areal Reduction for the Future Conditions Model**
Model: **Glendale/Peoria**
Designed by: **MAF** Date 12/21/2009 KHA Project No. 091910009
Checked by: **AOM** Date 1/18/2010 City of Glendale No. 089017

Objective: To determine the area that will be contributing to each combination point so that areal reduction values will be correctly applied.

Area contributing to each combination point (for areal reduction). Percent of contributing area based on percent flow diverted each direction.

			Combination Point to North / A			Combination Point to East / B			Combination Point C			Combination Point D					
Combination Point ID[1]	E/W Boundary Name[2]	N/S Boundary Name[2]	ID	Area (sq mi)	Percent Contribute	ID	Area (sq mi)	Percent Contribute	ID	Area (sq mi)	Percent Contribute	ID	Area (sq mi)	Percent Contribute	Subbasin ID	Subbasin Area (sq mi)	Total Area (sq mi)
*JM80	Jomax Road	80th Avenue													JM80	0.164	0.16
CNR01	Jomax Road	New River	*JM76	0.17	100%	*JM80	0.16	100%							JMNR	0.149	0.48
CNR02	Happy Valley Road	New River	CNR01	0.48	100%	*JM75	1.11	100%	CHV75	2.18	100%				HVNR	0.202	3.98
*HV67	Happy Valley Road	67th Avenue													HV67	0.544	0.54
CCL67	Calle Lejos	67th Avenue	*HV67	0.54	100%										CL67	0.275	0.82
*PP67	Pinnacle Peak Road	67th Avenue													PP67	0.096	0.10
CPP73	Pinnacle Peak Road	73rd Avenue	CCL67	0.82	100%	*PP67	0.10	68%							PP73	0.545	1.43
*PP75	Pinnacle Peak Road	75th Avenue													PP75	0.420	0.42
CNR03	Pinnacle Peak Road	New River	CNR02	3.98	100%	*PP75	0.42	100%	CPP73	1.43	59%				PPNR	0.237	5.47
CWL67	Williams Road	67th Avenue	*PP67	0.10	32%										WL67	0.103	0.13
CWL75	Williams Road	75th Avenue	CWL67	0.13	100%	CPP73	1.43	41%							WL75	0.475	1.20
*WWBR	Westwing Parkway	Black Rock													WWBR	0.184	0.18
CWWRS	Westwing Parkway	Rock Springs Wash	*WWBR	0.18	100%										WWRS	0.144	0.33
CJMRS	Jomax Road	Rock Springs Wash	CWWRS	0.33	100%										JMRS	0.567	0.90
*83RS	83rd Avenue	Rock Springs Wash													83RS	0.638	0.64
CHVRS	Happy Valley Road	Rock Springs Wash	*83RS	0.64	100%	CJMRS	0.90	100%							HVRS	0.630	2.16
*HV83	Happy Valley Road	83rd Avenue													HV83	0.035	0.04
CCL77	Calle Lejos	77th Avenue	*HV83	0.04	100%	CHVRS	2.16	100%							CL77	0.316	2.51
CPP77	Pinnacle Peak Road	77th Avenue	CCL77	2.51	100%										PP77	0.270	2.78
CNR04	Williams Road	New River	CPP77	2.78	100%	CNR03	5.47	100%	CWL75	1.20	100%				WLNR	0.390	9.84
*DV75	Deer Valley Road	75th Avenue													DV75	0.501	0.50
CNR05	Deer Valley Road	New River	CNR04	9.84	100%	*DV75	0.50	50%							DVNR	0.401	10.50
*DV67	Deer Valley Road	67th Avenue													DV67	0.503	0.50
CLO67	Loop 101	67th Avenue	*DV67	0.50	100%										LO67	1.217	1.72
CLO75	Loop 101	75th Avenue	CLO67	1.72	100%										LO75	0.970	2.69
CILO75	Loop 101	75th Avenue	*DV75	0.50	50%	CLO75	2.69	100%									2.94
*PP81	Pinnacle Peak Road	81st Avenue													PP81	0.197	0.20
CWL83	Williams Road	83rd Avenue	*PP81	0.20	100%										WL83	0.125	0.32
*HV87	Happy Valley Road	87th Avenue													HV87	0.285	0.29
CPP87	Pinnacle Peak Road	87th Avenue	*HV87	0.29	100%										PP87	0.981	1.27
*PP91	Pinnacle Peak Road	91st Avenue													PP91	0.161	0.16
CDV83	Deer Valley Road	83rd Avenue	CWL83	0.32	100%										DV83	0.107	0.43
CNR06	Beardsley Road	New River	CDV83	0.43	100%	CNR05	10.50	100%	CILO75	2.94	100%				BYNR	1.034	14.90
CDV87	Deer Valley Road	87th Avenue	CPP87	1.27	100%										DV87	1.004	2.27
CBY87	Beardsley Road	87th Avenue	CDV87	2.27	100%										BY87	0.959	3.23
CUH87	Union Hills Drive	87th Avenue	CBY87	3.23	100%										UH87	0.998	4.23
CNR07	Union Hills Drive	New River	CNR06	14.90	100%										UHNR	0.386	15.29
CNR08	Bell Road	New River	CNR07	15.29	100%	CUH87	4.23	41%							BLNR	0.603	17.63
*RG93	Rose Garden Lane	93rd Avenue													RG93	0.248	0.25
CBY91	Beardsley Road	91st Avenue	*RG93	0.25	50%										BY91	0.501	0.63
CUH91	Union Hills Drive	91st Avenue	CBY91	0.63	100%										UH91	0.929	1.55
CIUH91	Union Hills Drive	91st Avenue	CUH91	1.55	100%	CUH87	4.23	59%								0.000	4.04
CBL91	Bell Road	91st Avenue	CIUH91	4.04	100%										BL91	0.901	4.94
CPNR08	Bell Road	New River	CNR08	17.63	100%											0.000	17.63
CGW91	Greenway Road	91st Avenue	CBL91	4.94	58%										GW91	0.477	3.35
CNR09	Greenway Road	New River	CPNR08	17.63	100%	CSK04	37.07	100%	CGW91	3.35	50%	CBL91	4.94	42%	GWNR	0.696	59.13

Kimley-Horn and Associates, Inc.

Project: ***Glendale Stormwater Management Plan***
Subject: **Areas Contributing to Combination Points for Areal Reduction for the Future Conditions Model**
Model: **Glendale/Peoria**
Designed by: **MAF** Date 12/21/2009
Checked by: **AOM** Date 1/18/2010

KHA Project No. 091910009
City of Glendale No. 089017

Objective: To determine the area that will be contributing to each combination point so that areal reduction values will be correctly applied.

Area contributing to each combination point (for areal reduction). Percent of contributing area based on percent flow diverted each direction.

			Combination Point to North / A			Combination Point to East / B			Combination Point C			Combination Point D					
Combination Point ID[1]	E/W Boundary Name[2]	N/S Boundary Name[2]	ID	Area (sq mi)	Percent Contribute	ID	Area (sq mi)	Percent Contribute	ID	Area (sq mi)	Percent Contribute	ID	Area (sq mi)	Percent Contribute	Subbasin ID	Subbasin Area (sq mi)	Total Area (sq mi)
CNR10	Thunderbird Road	New River	CNR09	59.13	100%	CGW91	3.35	50%							TBNR	1.123	61.93
*HV93	Happy Valley Road	93rd Avenue													HV93	0.172	0.17
CPPLP	Pinnacle Peak Road	Lake Pleasant Boulevard	*HV93	0.17	58%	*PP91	0.16	100%							PPLP	0.885	1.15
CDV99	Deer Valley Road	99th Avenue	CPPLP	1.15	0%										DV99	1.217	1.22
CRGLP	Rose Garden Lane	Lake Pleasant Boulevard	CDV99	1.22	100%	*RG93	0.25	50%							RGLP	0.410	1.75
CBY07	Beardsley Road	107th Avenue	CRGLP	1.75	50%										BY07	0.513	1.39
CUH99	Union Hills Drive	99th Avenue	CBY07	1.39	50%										UH99	0.563	1.26
*UH97	Union Hills Drive	97th Avenue													UH97	0.272	0.27
CDW99	Del Webb Boulevard	99th Avenue	CUH99	1.26	100%	*UH97	0.27	100%							DW99	0.155	1.68
CBL99	Bell Road	99th Avenue	CDW99	1.68	50%										BL99	1.133	1.98
CBN99	Burns Drive	99th Avenue	CBL99	1.98	100%										BN99	1.037	3.01
CTB99	Thunderbird Road	99th Avenue	CBN99	3.01	100%										TB99	0.976	3.99
CDW07	Del Webb Boulevard	107th Avenue	CDW99	1.68	50%										DW07	0.484	1.33
CTL07	Talisman	107th Avenue	CDW07	1.33	50%										TL07	0.580	1.24
*RO99	Royal Oak	99th Avenue													RO99	0.414	0.41
CGR99	Grand Avenue	99th Avenue	CTL07	1.24	100%	*RO99	0.41	100%							GR99	1.309	2.97
CNR11	Grand Avenue	New River	CTB99	3.99	100%	CNR10	61.93	100%	CGR99	2.97	100%				GRNR	0.947	69.83
*PE99	Peoria Avenue	99th Avenue													PE99	0.294	0.29
*PENR	Peoria Avenue	New River													PENR	0.197	0.20
CNR12	Peoria Avenue	97th Avenue	CNR11	69.83	100%	*PE99	0.29	70%	*PENR	0.20	56%				PE97	0.560	70.71
*PE11	Peoria Avenue	111th Avenue													PE11	0.924	0.92
*PE07	Peoria Avenue	107th Avenue													PE07	0.575	0.58
*PE03	Peoria Avenue	103rd Avenue													PE03	0.409	0.41
COL03	Olive Avenue	103rd Avenue	*PE11	0.92	100%	*PE07	0.58	100%	*PE03	0.41	100%				OL03	1.099	3.01
COLNR	Olive Avenue	New River	*PENR	0.20	44%										OLNR	0.696	0.78
CNR13	Olive Avenue	99th Avenue	*PE99	0.29	30%	COL03	3.01	100%	CNR12	70.71	100%	COLNR	0.78	67%	OL99	0.436	74.76
CNONR	Northern Avenue	New River	COLNR	0.78	33%										NONR	0.830	1.09
CNR14	Northern Avenue	99th Avenue	CNR13	74.76	100%	CNONR	1.09	100%							NO99	0.858	76.71
CNR15	Glendale Avenue	103rd Avenue	CNR14	76.71	100%										GL03	0.649	77.36
*GLGH	Glendale Avenue	Glen Harbor Boulevard													GLGH	0.079	0.08
CNR16	Glen Harbor Boulevard	New River	*GLGH	0.08	100%	CNR15	77.36	100%							GHNR	0.841	78.28
*AF11	Agua Fria River	111th Avenue													AF11	0.375	0.38
*GHAF	Glen Harbor Boulevard	Agua Fria River													GHAF	0.563	0.56
CAF06	Agua Fria River		CNR16	78.28	100%	*AF11	0.38	100%	*GHAF	0.56	100%					0.000	79.22
*JMAF	Jomax Road	Agua Fria River													JMAF	0.147	0.15
*HV07	Happy Valley Road	107th Avenue													HV07	0.304	0.30
*HVAF	Happy Valley Road	Agua Fria River													HVAF	0.215	0.22
*JM99	Jomax Road	99th Avenue													JM99	0.568	0.57
*WWLP	Westwing Parkway	Lake Pleasant Boulevard													WWLP	0.136	0.14
CJMLP	Jomax Road	Lake Pleasant Boulevard	*JM99	0.57	100%	*WWLP	0.14	100%							JMLP	0.705	1.41
*YLLP	Yearling	Lake Pleasant Boulevard													YLLP	0.595	0.60
CHVLP	Happy Valley Road	Lake Pleasant Boulevard	*HV93	0.17	42%										HVLP	0.198	0.27
CHV01	Happy Valley Road	101st Avenue	CJMLP	1.41	100%	*YLLP	0.60	100%	CHVLP	0.27	100%				HV01	0.444	2.72
*CL07	Calle Lejos	107th Avenue													CL07	0.524	0.52
CCLAF	Calle Lejos	Agua Fria River	CHV01	2.72	100%	*CL07	0.52	88%							CLAF	0.289	3.47
CAF01	Agua Fria River		*JMAF	0.15	100%	*HV07	0.30	100%	*HVAF	0.22	100%	CCLAF	3.47	100%		0.000	4.13

Kimley-Horn and Associates, Inc.

Project: ***Glendale Stormwater Management Plan***
Subject: **Areas Contributing to Combination Points for Areal Reduction for the Future Conditions Model**
Model: **Glendale/Peoria**
Designed by: **MAF** Date 12/21/2009
Checked by: **AOM** Date 1/18/2010

KHA Project No. 091910009
City of Glendale No. 089017

Objective: To determine the area that will be contributing to each combination point so that areal reduction values will be correctly applied.

Area contributing to each combination point (for areal reduction). Percent of contributing area based on percent flow diverted each direction.

			Combination Point to North / A			Combination Point to East / B			Combination Point C			Combination Point D					
Combination Point ID[1]	E/W Boundary Name[2]	N/S Boundary Name[2]	ID	Area (sq mi)	Percent Contribute	ID	Area (sq mi)	Percent Contribute	ID	Area (sq mi)	Percent Contribute	ID	Area (sq mi)	Percent Contribute	Subbasin ID	Subbasin Area (sq mi)	Total Area (sq mi)
CPP03	Pinnacle Peak Road	103rd Avenue	*CL07	0.52	12%	CPPLP	1.15	100%							PP03	0.325	1.53
CPP07	Pinnacle Peak Road	107th Avenue	CPP03	1.53	100%										PP07	0.195	1.73
*DVAF	Deer Valley Road	Agua Fria River													DVAF	0.412	0.41
CPPAF	Pinnacle Peak Road	Agua Fria River	CPP07	1.73	100%										PPAF	0.270	2.00
CAF02	Agua Fria River		CPPAF	2.00	100%	*DVAF	0.41	100%								0.000	2.41
CDV07	Deer Valley Road	107th Avenue	CPP03	1.53	0%										DV07	0.645	0.65
CDVLP	Deer Valley Road	Lake Pleasant Boulevard	CPPLP	1.15	0%										DVLP	0.136	0.14
CRG07	Rose Garden Lane	107th Avenue	CDV07	0.65	100%	CDVLP	0.14	100%	CRGLP	1.75	50%				RG07	0.350	2.01
CRGAF	Rose Garden Lane	Agua Fria River	CRG07	2.01	100%										RGAF	0.332	2.34
CBYAF	Beardsley Road	Agua Fria River	CBY07	1.39	50%										BYAF	0.609	1.30
*UHAF	Union Hills Drive	Agua Fria River													UHAF	0.489	0.49
CAF03	Agua Fria River		CRGAF	2.34	100%	CBYAF	1.30	100%	*UHAF	0.49	100%					0.000	4.13
*UH07	Union Hills Drive	107th Avenue													UH07	0.252	0.25
CUH15	Union Hills Drive	115th Avenue	*UH07	0.25	100%										UH15	1.019	1.27
CBL15	Bell Road	115th Avenue	CUH15	1.27	100%	CDW07	1.33	50%							BL15	0.962	2.90
CMEAF	Meade Drive	Agua Fria River	CBL15	2.90	100%										MEAF	1.369	4.27
*BLAF	Bell Road	Agua Fria River													BLAF	0.283	0.28
*GRAF	Grand Avenue	Agua Fria River													GRAF	0.859	0.86
*PEAF	Peoria Avenue	Agua Fria River													PEAF	0.531	0.53
CAF04	Agua Fria River		CMEAF	4.27	100%	*BLAF	0.28	100%	*GRAF	0.86	100%	*PEAF	0.53	100%		0.000	5.94
*OL11	Olive Avenue	111th Avenue													OL11	0.339	0.34
CNO11	Northern Avenue	111th Avenue	*OL11	0.34	100%										NO11	0.860	1.20
*NO07	Northern Avenue	107th Avenue													NO07	0.340	0.34
CGL11	Glendale Avenue	111th Avenue	*NO07	0.34	100%										GL11	0.426	0.77
CGL14	Glendale Avenue	114th Avenue	CNO11	1.20	100%	CGL11	0.77	100%							GL14	0.481	2.45
CGLAF	Glendale Avenue	Agua Fria River	CGL14	2.45	100%										GLAF	0.388	2.83
*OLAF	Olive Avenue	Agua Fria River													OLAF	1.026	1.03
*NOAF	Northern Avenue	Agua Fria River													NOAF	0.285	0.29
CAF05	Agua Fria River		CGLAF	2.83	100%	*OLAF	1.03	100%	*NOAF	0.29	100%					0.000	4.15

Notes:

1. Corresponds to the KK card in HEC-1. Subbasins that do not have a corresponding combination point are marked with an asterisk (*).
2. Correspond to streets or watercourse downstream of Combination Point ID.
3. Combination point directly upstream of the "Combination Point ID". The percent of this combination point that will contribute to the "Combination Point ID" is determined by the diversion.
4. The total area contributing to each combination point is determined by summing the percent of area of the upstream combination point that is being diverted as surface flow plus the subbasin that contributes directly to the combination point. Some combination points may not have a subbasin co to them. Some subbasins do not contribute directly to a combination point. To account for the area for these subbasins they are included in the table and marked with an asterisk (*). For example, there is not a combination point for surface flow at the I-10 and 27th Avenue (IN27). The area for in the table under *IN27.

Appendix I HEC-1 Model Results

Maryvale ADMS Area Model Results

Glendale/Peoria ADMPU Area Model Results

Kimley-Horn and Associates, Inc.

Summary of Subbasin Discharges from the 6-Hour Maryvale Model.

Drainage ID	100-year			10-year		
	Existing Discharge (cfs)	Future Discharge (cfs)	Difference (cfs)	Existing Discharge (cfs)	Future Discharge (cfs)	Difference (cfs)
BH27	236	236	0	117	117	0
BH35	1040	1035	-5	470	473	3
BH43	499	499	0	264	264	0
BH51	561	561	0	319	319	0
BH59	663	687	24	355	374	19
BH67	530	540	10	285	292	7
BH75	652	663	11	355	376	21
BH83	614	657	43	305	338	33
BH91	589	607	18	307	338	31
BH99	102	120	18	41	65	24
BHLO	918	918	0	518	518	0
BHNR	160	242	82	51	129	78
BHRI	245	395	150	77	213	136
CB07	132	136	4	62	65	3
CB27	235	235	0	117	117	0
CB35	527	527	0	285	285	0
CB43	966	966	0	432	432	0
CB51	889	889	0	505	505	0
CB59	792	876	84	398	466	68
CB67	620	622	2	340	341	1
CB75	591	592	1	332	336	4
CB83	560	560	0	264	264	0
CB91	603	602	-1	237	333	96
CB99	147	154	7	70	85	15
CBLO	570	662	92	238	349	111
CBNR	215	208	-7	79	83	4
CBRI	343	375	32	179	219	40
CT59	297	297	0	148	148	0
CT67	734	726	-8	338	339	1
CT75	637	637	0	337	343	6
CT83	645	645	0	353	353	0
CTLO	553	560	7	293	293	0
GC35	149	149	0	85	85	0
GC43	357	357	0	195	195	0
GC51	221	221	0	123	123	0
GC59	332	332	0	156	156	0
GC67	658	658	0	321	321	0
GC75	196	196	0	116	116	0
GC83	188	191	3	108	112	4
GCGR	980	980	0	608	608	0
GL27	223	223	0	111	111	0
GL35	546	546	0	300	300	0
GL43	639	639	0	348	348	0
GL51	545	548	3	303	306	3
GL59	630	634	4	318	321	3
GL67	461	461	0	243	243	0
GL75	365	364	-1	185	186	1
GL83	338	338	0	155	159	4
GL91	539	566	27	280	316	36
GLLO	531	646	115	206	364	158

Kimley-Horn and Associates, Inc.

Summary of Subbasin Discharges from the 6-Hour Maryvale Model.

Drainage ID	100-year			10-year		
	Existing Discharge (cfs)	Future Discharge (cfs)	Difference (cfs)	Existing Discharge (cfs)	Future Discharge (cfs)	Difference (cfs)
GLNR	258	299	41	107	172	65
GR27	626	626	0	347	347	0
GR35	595	594	-1	292	293	1
GR43	575	600	25	276	298	22
GR59	749	754	5	393	395	2
GR67	622	631	9	322	330	8
GR75	620	597	-23	322	320	-2
GR83	554	546	-8	302	301	-1
GR91	596	592	-4	315	315	0
GW83	150	156	6	63	68	5
IN07	269	333	64	139	187	48
IN27	152	152	0	86	86	0
IN35	630	630	0	383	383	0
IN43	522	522	0	292	292	0
IN51	271	283	12	152	160	8
IN59	140	137	-3	74	73	-1
IN67	117	116	-1	62	63	1
IN75	128	136	8	65	71	6
IN83	139	139	0	74	74	0
IN91	201	240	39	111	135	24
INAF	250	358	108	108	170	62
INAV	244	304	60	118	171	53
INLO	141	217	76	73	125	52
IS07	625	642	17	340	353	13
IS27	189	189	0	99	99	0
IS35	1162	1162	0	582	582	0
IS43	859	859	0	486	486	0
IS51	649	727	78	311	363	52
IS59	584	584	0	311	311	0
IS75	553	553	0	280	280	0
IS83	609	609	0	323	323	0
IS91	657	657	0	373	373	0
IS99	240	399	159	98	227	129
ISAF	499	508	9	280	288	8
ISGC	73	73	0	40	40	0
ISLO	515	648	133	234	349	115
MD07	522	542	20	306	314	8
MD27	362	362	0	209	209	0
MD35	793	787	-6	431	429	-2
MD43	1207	1207	0	647	647	0
MD51	606	606	0	355	355	0
MD59	606	606	0	347	347	0
MD67	640	647	7	338	339	1
MD75	655	661	6	359	363	4
MD83	895	1035	140	463	584	121
MD91	675	683	8	377	384	7
MD99	174	301	127	71	168	97
MDAF	337	390	53	167	213	46
MDAV	547	565	18	312	328	16
MDLO	745	749	4	394	400	6

Kimley-Horn and Associates, Inc.

Summary of Subbasin Discharges from the 6-Hour Maryvale Model.

Drainage ID	100-year			10-year		
	Existing Discharge (cfs)	Future Discharge (cfs)	Difference (cfs)	Existing Discharge (cfs)	Future Discharge (cfs)	Difference (cfs)
NO27	104	104	0	56	56	0
NO35	577	577	0	313	313	0
NO43	564	564	0	303	303	0
NO51	565	565	0	295	297	2
NO59	626	646	20	327	339	12
NO67	654	659	5	342	366	24
NO75	674	676	2	366	380	14
NO83	748	780	32	357	442	85
NO91	597	624	27	310	348	38
NOLO	263	262	-1	147	146	-1
OL35	199	199	0	101	101	0
OL43	426	426	0	198	198	0
OL51	662	665	3	339	341	2
OL59	675	675	0	361	361	0
OL67	726	726	0	360	360	0
OL75	669	669	0	356	356	0
OL83	586	602	16	293	327	34
OL91	725	735	10	386	392	6
OLLO	168	168	0	95	94	-1
OW67	198	217	19	109	127	18
OW75	518	532	14	269	286	17
OW83	332	335	3	151	167	16
PE51	438	438	0	226	226	0
PE59	708	708	0	360	360	0
PE67	652	654	2	335	336	1
PE75	640	640	0	354	354	0
PE83	659	660	1	383	385	2
PE91	615	627	12	325	335	10
PELO	202	228	26	95	115	20
RI07	534	621	87	218	332	114
RIAF	339	339	0	197	197	0
TB67	335	343	8	168	178	10
TB75	840	832	-8	408	401	-7
TB83	570	570	0	295	295	0
TBLO	85	89	4	47	49	2
TM07	155	154	-1	81	82	1
TM35	630	630	0	363	363	0
TM43	420	420	0	236	236	0
TM51	306	306	0	168	168	0
TM59	383	400	17	184	184	0
TM67	560	560	0	297	297	0
TM75	723	719	-4	380	381	1
TM83	607	607	0	336	336	0
TM91	620	620	0	349	349	0
TM99	294	556	262	120	311	191
TMAF	414	414	0	242	242	0
TMLO	320	560	240	123	311	188
TMRI	404	500	96	191	285	94

Kimley-Horn and Associates, Inc.

Summary of Concentration Point Discharges from the 6-Hour Maryvale Model.

Drainage ID	100-year			10-year		
	Existing Discharge (cfs)	Future Discharge (cfs)	Difference (cfs)	Existing Discharge (cfs)	Future Discharge (cfs)	Difference (cfs)
CBH27	486	485	-1	213	213	0
CBH35	915	915	0	410	413	3
CBH43	728	728	0	270	270	0
CBH51	715	1032	317	293	413	120
CBH59	508	523	15	252	268	16
CBH67	792	810	18	376	392	16
CBH75	799	705	-94	201	212	11
CBH83	634	317	-317	92	0	-92
CBH91	2177	2191	14	686	990	304
CBH99	2574	2520	-54	747	1024	277
CBHLO	2562	2499	-63	742	994	252
CBHNR	2555	2527	-28	737	1016	279
CBHRI	2566	2514	-52	743	1022	279
CCB07	143	134	-9	60	63	3
CCB27	598	596	-2	266	266	0
CCB35	1264	1267	3	561	567	6
CCB43	841	845	4	361	363	2
CCB51	734	734	0	421	421	0
CCB59	1120	1206	86	576	645	69
CCB67	1300	1190	-110	644	494	-150
CCB75	1204	932	-272	551	313	-238
CCB91	681	402	-279	186	51	-135
CCBLO	716	460	-256	208	35	-173
CCBNR	208	203	-5	76	78	2
CCBRI	187	79	-108	23	5	-18
CCT67	801	801	0	336	287	-49
CCT75	1053	1001	-52	354	352	-2
CCT83	1233	1162	-71	313	308	-5
CCTLO	1446	1413	-33	340	327	-13
CGC35	1785	1785	0	769	776	7
CGC43	596	596	0	216	217	1
CGC51	683	646	-37	252	253	1
CGC53	766	706	-60	331	264	-67
CGC55	671	559	-112	203	127	-76
CGC59	683	535	-148	152	128	-24
CGC67	1227	1006	-221	494	275	-219
CGC75	1331	1187	-144	475	467	-8
CGC83	1691	1785	94	663	863	200
CGCGR	1313	1315	2	586	589	3
CGL27	391	393	2	177	176	-1
CGL35	694	699	5	296	294	-2
CGL43	797	797	0	331	331	0
CGL51	828	832	4	265	268	3
CGL59	1063	673	-390	370	251	-119
CGL67	461	461	0	243	243	0
CGL75	707	652	-55	149	129	-20
CGL83	397	369	-28	86	72	-14
CGL91	979	811	-168	184	88	-96
CGLLO	523	375	-148	50	0	-50

Kimley-Horn and Associates, Inc.

Summary of Concentration Point Discharges from the 6-Hour Maryvale Model.

Drainage ID	100-year			10-year		
	Existing Discharge (cfs)	Future Discharge (cfs)	Difference (cfs)	Existing Discharge (cfs)	Future Discharge (cfs)	Difference (cfs)
CGR27	916	917	1	359	362	3
CGR35	554	556	2	223	228	5
CGR43	690	714	24	308	330	22
CGR59	820	898	78	410	436	26
CGR67	1224	1157	-67	220	226	6
CGR75	820	824	4	198	182	-16
CGR83	927	909	-18	227	228	1
CGR91	544	536	-8	163	134	-29
CGRLO	371	331	-40	61	50	-11
CIBH83	1874	2144	270	669	930	261
CIBHGR	340	447	107	68	91	23
CICB07	203	86	-117	41	44	3
CICB43	179	180	1	74	75	1
CICB75	1595	1571	-24	665	833	168
CICBGR	106	107	1	46	46	0
CIGR35	783	783	0	361	366	5
CIGR43	311	313	2	128	129	1
CIGR59	513	403	-110	66	19	-47
CIGR75	1805	1659	-146	340	336	-4
CIIS35	1771	1771	0	771	779	8
CIN07	6759	6373	-386	3168	2938	-230
CIN35	1224	1225	1	554	555	1
CIN43	1394	1393	-1	611	610	-1
CIN51	693	706	13	400	406	6
CIN59	1487	1485	-2	901	898	-3
CIN67	2127	2120	-7	1379	1366	-13
CIN75	2950	2936	-14	1876	1867	-9
CIN83	3368	3350	-18	2233	2224	-9
CIN91	4117	4086	-31	2670	2610	-60
CINAF	6726	6359	-367	3150	2932	-218
CINAV	6723	6382	-341	3151	2938	-213
CINLO	6735	6326	-409	3180	3037	-143
CIPEGR	508	486	-22	78	38	-40
CIS07	749	837	88	335	461	126
CIS27	701	700	-1	317	317	0
CIS35	1705	1705	0	675	680	5
CIS43	645	645	0	368	368	0
CIS51	769	778	9	194	173	-21
CIS59	1070	918	-152	534	343	-191
CIS83	844	844	0	318	318	0
CIS91	1030	784	-246	351	346	-5
CIS99	240	399	159	98	227	129
CISAF	906	1008	102	389	469	80
CISGC	662	548	-114	249	131	-118
CISLO	1258	864	-394	190	48	-142
CMD07	547	634	87	32	102	70
CMD27	635	635	0	199	202	3
CMD35	1848	1851	3	874	876	2
CMD43	1184	1184	0	492	492	0

Kimley-Horn and Associates, Inc.

Summary of Concentration Point Discharges from the 6-Hour Maryvale Model.

Drainage ID	100-year			10-year		
	Existing Discharge (cfs)	Future Discharge (cfs)	Difference (cfs)	Existing Discharge (cfs)	Future Discharge (cfs)	Difference (cfs)
CMD51	592	592	0	326	326	0
CMD59	883	877	-6	306	301	-5
CMD67	945	929	-16	348	340	-8
CMD75	1291	1276	-15	380	365	-15
CMD83	1253	1243	-10	430	443	13
CMD91	2252	2215	-37	579	570	-9
CMD99	271	481	210	108	269	161
CMDAF	438	490	52	152	201	49
CMDAV	492	476	-16	41	90	49
CMDLO	2995	2646	-349	541	389	-152
CNO35	597	597	0	310	310	0
CNO43	849	849	0	292	292	0
CNO51	823	827	4	262	265	3
CNO59	1195	1206	11	286	291	5
CNO67	1354	1383	29	303	224	-79
CNO75	1769	1645	-124	325	323	-2
CNO83	899	873	-26	303	125	-178
CNO91	1411	1145	-266	319	109	-210
CNOLO	1137	950	-187	232	98	-134
COL43	422	422	0	195	195	0
COL51	841	843	2	366	368	2
COL59	1121	1123	2	331	331	0
COL67	781	781	0	232	232	0
COL75	957	959	2	191	176	-15
COL83	535	416	-119	245	54	-191
COL91	710	723	13	195	188	-7
COLLO	469	481	12	98	78	-20
COW67	121	131	10	69	79	10
COW75	796	736	-60	149	130	-19
COW83	283	288	5	124	103	-21
CPE59	875	875	0	414	414	0
CPE67	876	862	-14	56	53	-3
CPE75	734	709	-25	313	313	0
CPE83	1093	1042	-51	286	270	-16
CPE91	577	552	-25	244	258	14
CPELO	306	301	-5	61	79	18
CPGL59	451	451	0	420	432	12
CRI07	713	637	-76	225	252	27
CRIAF	329	329	0	189	190	1
CTB75	950	945	-5	441	443	2
CTB83	913	898	-15	343	332	-11
CTBLO	267	258	-9	90	84	-6
CTM07	352	273	-79	100	135	35
CTM27	974	977	3	390	392	2
CTM35	1558	1560	2	690	692	2
CTM43	805	806	1	249	250	1
CTM51	336	316	-20	144	144	0
CTM59	676	576	-100	221	173	-48
CTM67	617	555	-62	260	260	0

Kimley-Horn and Associates, Inc.

Summary of Concentration Point Discharges from the 6-Hour Maryvale Model.

Drainage ID	100-year			10-year		
	Existing Discharge (cfs)	Future Discharge (cfs)	Difference (cfs)	Existing Discharge (cfs)	Future Discharge (cfs)	Difference (cfs)
CTM75	884	886	2	369	368	-1
CTM83	1076	1076	0	316	316	0
CTM91	1452	1356	-96	363	361	-2
CTM99	289	551	262	117	308	191
CTMAF	504	474	-30	231	232	1
CTMLO	1577	1143	-434	259	86	-173
CTMRI	413	552	139	193	226	33

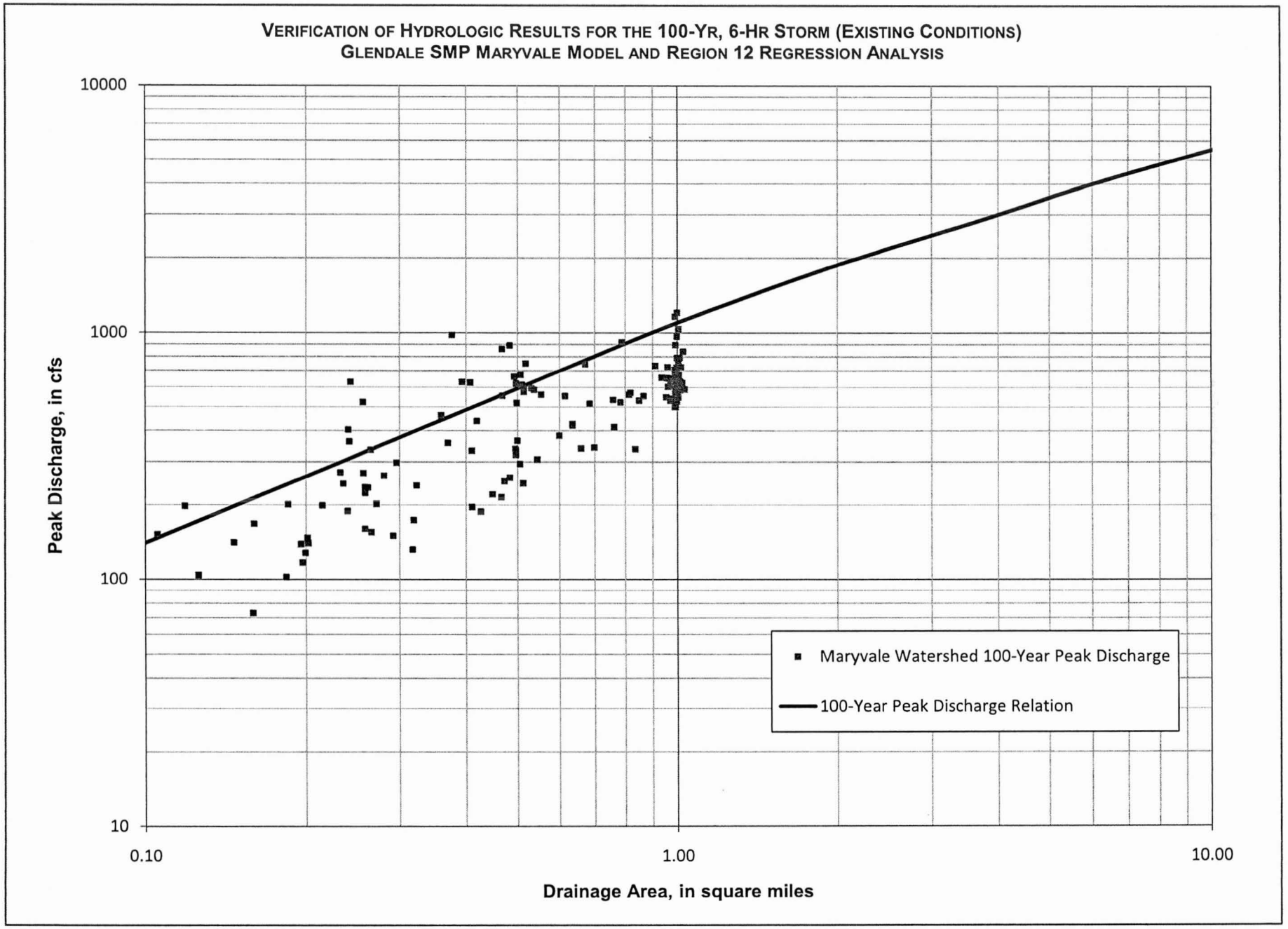

Based on Figure 8.8 from DDM

Kimley-Horn and Associates, Inc.

Project: ***Glendale Stormwater Management Plan***
Subject: **Regression Analysis**
Model: **Maryvale**
Designed by: **MAF** Date 2/24/2010 KHA Project No. 091910009
Checked by: **AOM** Date 3/15/2010 City of Glendale No. 089017

Objective: To compare the results of the HEC-1 model with regression analysis approximation

Flood Magnitude-Frequency Relations for the Central AZ Region (R12)

Recurrence interval, in years	Equation	Average standard error of model, in percent
10	$Q = 479\ AREA^{0.661}\ ELEV^{-0.398}$	52
100	$LOG_{10}\ Q = 6.55 - 3.17\ AREA^{-0.11} - 0.454\ LOG_{10}\ ELEV$	39

Notes:
Obtained from Table 8.2 in the Flood Control District of Maricopa County's *Drainage Design Manual - Hydrology*, November 2009.
Where: *Q* = peak discharge, in cubic feet per second
AREA = drainage area, in square miles
ELEV = mean basin elevation, in feet divided by 1,000

Peak Discharge Comparison for the 6-hour storm event.

Subbasin Parameters			10-Year Peak Discharge			100-Year Peak Discharge		
Subbasin ID	Area (sq mi)	Mean Elev (ft/1000)	From Regression (cfs)	From HEC-1 (cfs)	Percent Difference	From Regression (cfs)	From HEC-1 (cfs)	Percent Difference
GW83	0.29	1.201	765	63	-92%	197	150	-24%
TB67	0.26	1.212	696	168	-76%	184	335	82%
TB75	1.03	1.208	2247	408	-82%	452	840	86%
TB83	0.99	1.189	2208	295	-87%	445	570	28%
TBLO	0.10	1.171	270	47	-83%	98	85	-13%
CT59	0.30	1.216	771	148	-81%	198	297	50%
CT67	0.91	1.204	2044	338	-83%	418	734	76%
CT75	1.00	1.189	2224	337	-85%	448	637	42%
CT83	1.01	1.173	2246	353	-84%	452	645	43%
CTLO	0.87	1.155	1998	293	-85%	411	553	35%
PE51	0.42	1.218	1054	226	-79%	249	438	76%
PE59	0.99	1.208	2183	360	-84%	441	708	60%
PE67	0.96	1.191	2147	335	-84%	435	652	50%
PE75	1.01	1.173	2245	354	-84%	452	640	42%
PE83	1.00	1.158	2244	383	-83%	452	659	46%
GR91	0.51	1.145	1295	315	-76%	292	596	104%
PE91	0.51	1.135	1290	325	-75%	292	615	111%
PELO	0.27	1.130	736	95	-87%	193	202	5%
OL35	0.21	1.228	568	101	-82%	160	199	25%
OL43	0.63	1.223	1506	198	-87%	327	426	30%
OL51	0.99	1.210	2188	339	-85%	442	662	50%
OL59	0.99	1.193	2197	361	-84%	444	675	52%
OL67	0.96	1.175	2157	360	-83%	437	726	66%
OL75	1.00	1.156	2253	356	-84%	453	669	48%
GR83	0.47	1.149	1192	302	-75%	274	554	102%
OL83	0.54	1.137	1350	293	-78%	302	586	94%
OL91	1.02	1.129	2299	386	-83%	461	725	57%
OLLO	0.16	1.117	446	95	-79%	136	168	23%

Kimley-Horn and Associates, Inc.

Peak Discharge Comparison for the 6-hour storm event.

Subbasin Parameters			10-Year Peak Discharge			100-Year Peak Discharge		
Subbasin ID	Area (sq mi)	Mean Elev (ft/1000)	From Regression (cfs)	From HEC-1 (cfs)	Percent Difference	From Regression (cfs)	From HEC-1 (cfs)	Percent Difference
NO27	0.13	1.214	339	56	-83%	113	104	-8%
NO35	0.99	1.218	2178	313	-86%	440	577	31%
NO43	0.99	1.210	2191	303	-86%	442	564	27%
NO51	0.99	1.197	2198	295	-87%	444	565	27%
NO59	0.99	1.179	2211	327	-85%	446	626	40%
NO67	0.96	1.160	2164	342	-84%	438	654	49%
GR75	0.50	1.146	1257	322	-74%	286	620	117%
NO75	0.51	1.137	1283	366	-71%	290	674	132%
NO83	1.00	1.125	2283	357	-84%	458	748	63%
NO91	0.99	1.114	2272	310	-86%	457	597	31%
NOLO	0.28	1.102	767	147	-81%	199	263	32%
GL27	0.26	1.195	685	111	-84%	182	223	22%
GL35	1.00	1.196	2218	300	-86%	447	546	22%
GL43	1.00	1.192	2211	348	-84%	446	639	43%
GL51	1.00	1.184	2225	303	-86%	448	545	22%
GL59	1.02	1.169	2262	318	-86%	455	630	39%
GR67	0.50	1.153	1255	322	-74%	285	622	118%
OW67	0.12	1.142	329	109	-67%	111	198	78%
GL67	0.36	1.144	945	243	-74%	231	461	100%
OW75	0.50	1.133	1266	269	-79%	287	518	80%
GL75	0.50	1.127	1273	185	-85%	289	365	26%
OW83	0.50	1.120	1269	151	-88%	288	332	15%
GL83	0.49	1.115	1269	155	-88%	288	338	17%
GL91	0.98	1.098	2260	280	-88%	455	539	18%
GLLO	0.85	1.085	2023	206	-90%	416	531	28%
GLNR	0.48	1.075	1264	107	-92%	288	258	-10%
BH27	0.26	1.174	691	117	-83%	184	236	28%
BH35	1.01	1.175	2239	470	-79%	451	1040	131%
BH43	0.99	1.174	2219	264	-88%	447	499	12%
BH51	1.00	1.165	2230	319	-86%	449	561	25%
GR59	0.52	1.159	1297	393	-70%	292	749	156%
BH59	0.49	1.149	1247	355	-72%	284	663	134%
BH67	0.97	1.140	2207	285	-87%	446	530	19%
BH75	1.00	1.119	2285	355	-84%	459	652	42%
BH83	1.00	1.103	2290	305	-87%	460	614	34%
BH91	1.03	1.085	2370	307	-87%	473	589	24%
BHLO	0.79	1.073	1913	518	-73%	398	918	131%
BH99	0.18	1.066	522	41	-92%	152	102	-33%
BHRI	0.51	1.059	1339	77	-94%	301	245	-19%
BHNR	0.26	1.048	726	51	-93%	192	160	-17%
CB27	0.26	1.154	705	117	-83%	186	235	26%
CB35	1.00	1.155	2246	285	-87%	452	527	17%
CB43	1.00	1.155	2244	432	-81%	452	966	114%
GR43	0.51	1.153	1291	276	-79%	291	575	97%
CB51	0.48	1.146	1227	505	-59%	280	889	217%
CB59	1.01	1.140	2280	398	-83%	458	792	73%
CB67	0.97	1.127	2217	340	-85%	448	620	39%
CB75	1.00	1.113	2282	332	-85%	459	591	29%
GC83	0.43	1.099	1121	108	-90%	262	188	-28%
CB83	0.55	1.089	1414	264	-81%	313	560	79%

Kimley-Horn and Associates, Inc.

Peak Discharge Comparison for the 6-hour storm event.

Subbasin Parameters			10-Year Peak Discharge			100-Year Peak Discharge		
Subbasin ID	Area (sq mi)	Mean Elev (ft/1000)	From Regression (cfs)	From HEC-1 (cfs)	Percent Difference	From Regression (cfs)	From HEC-1 (cfs)	Percent Difference
CB91	0.96	1.074	2250	237	-89%	454	603	33%
CBLO	0.82	1.060	1984	238	-88%	410	570	39%
CB99	0.20	1.055	572	70	-88%	162	147	-9%
CBRI	0.70	1.048	1751	179	-90%	371	343	-8%
CB07	0.32	1.043	882	62	-93%	221	132	-40%
CBNR	0.47	1.035	1245	79	-94%	285	215	-25%
IS27	0.24	1.135	653	99	-85%	177	189	7%
IS35	0.99	1.135	2247	582	-74%	453	1162	157%
GR35	0.53	1.138	1336	292	-78%	299	595	99%
IS43	0.47	1.129	1201	486	-60%	276	859	211%
IS51	0.99	1.129	2259	311	-86%	455	649	43%
IS59	1.01	1.123	2301	311	-86%	462	584	27%
GC67	0.94	1.112	2167	321	-85%	439	658	50%
GC75	0.41	1.105	1082	116	-89%	256	196	-23%
IS75	0.62	1.095	1542	280	-82%	335	553	65%
IS83	0.99	1.085	2294	323	-86%	461	609	32%
IS91	1.00	1.066	2329	373	-84%	467	657	41%
ISLO	0.68	1.050	1719	234	-86%	366	515	41%
IS99	0.32	1.041	896	98	-89%	223	240	7%
IS07	1.02	1.035	2401	340	-86%	479	625	30%
ISAF	0.99	1.021	2355	280	-88%	472	499	6%
GCGR	0.38	1.121	994	608	-39%	240	980	309%
GC35	0.08	1.117	211	85	-60%	84	149	78%
GC43	0.37	1.115	981	195	-80%	238	357	50%
GC51	0.45	1.114	1164	123	-89%	270	221	-18%
GC59	0.41	1.109	1079	156	-86%	255	332	30%
ISGC	0.16	1.103	447	40	-91%	137	73	-47%
GR27	0.41	1.108	1073	347	-68%	254	626	146%
TM35	0.39	1.109	1039	363	-65%	248	630	154%
TM43	0.64	1.106	1578	236	-85%	341	420	23%
TM51	0.54	1.104	1385	168	-88%	308	306	-1%
TM59	0.60	1.099	1506	184	-88%	329	383	16%
TM67	0.81	1.095	1946	297	-85%	403	560	39%
TM75	1.00	1.083	2308	380	-84%	463	723	56%
TM83	0.99	1.070	2311	336	-85%	464	607	31%
TM91	1.00	1.056	2346	349	-85%	470	620	32%
TMLO	0.50	1.044	1310	123	-91%	296	320	8%
TM99	0.51	1.036	1336	120	-91%	301	294	-2%
RI07	0.76	1.027	1892	218	-88%	395	534	35%
RIAF	0.66	1.017	1691	197	-88%	361	339	-6%
TM07	0.27	1.022	754	81	-89%	198	155	-22%
TMAF	0.76	1.010	1913	242	-87%	399	414	4%
MD27	0.24	1.094	669	209	-69%	180	362	101%
MD35	1.00	1.092	2302	431	-81%	462	793	72%
MD43	1.00	1.089	2306	647	-72%	463	1207	161%
MD51	1.00	1.088	2311	355	-85%	464	606	31%
MD59	1.00	1.084	2322	347	-85%	465	606	30%
MD67	0.98	1.076	2279	338	-85%	458	640	40%
MD75	1.00	1.068	2332	359	-85%	467	655	40%
MD83	0.99	1.054	2328	463	-80%	467	895	92%

Kimley-Horn and Associates, Inc.

Peak Discharge Comparison for the 6-hour storm event.

Subbasin Parameters			10-Year Peak Discharge			100-Year Peak Discharge		
Subbasin ID	Area (sq mi)	Mean Elev (ft/1000)	From Regression (cfs)	From HEC-1 (cfs)	Percent Difference	From Regression (cfs)	From HEC-1 (cfs)	Percent Difference
MD91	1.01	1.041	2369	377	-84%	474	675	43%
MDLO	0.67	1.030	1707	394	-77%	364	745	105%
MD99	0.32	1.031	889	71	-92%	222	174	-22%
TMRI	0.24	1.027	685	191	-72%	184	404	119%
MD07	0.78	1.021	1948	306	-84%	404	522	29%
MDAV	0.95	1.011	2298	312	-86%	462	547	18%
MDAF	0.83	0.998	2073	167	-92%	425	337	-21%
IN27	0.11	1.087	298	86	-71%	105	152	45%
IN35	0.24	1.081	676	383	-43%	182	630	246%
IN43	0.26	1.074	713	292	-59%	189	522	176%
IN51	0.23	1.072	650	152	-77%	177	271	53%
IN59	0.20	1.067	572	74	-87%	162	140	-14%
IN67	0.20	1.059	560	62	-89%	160	117	-27%
IN75	0.20	1.052	568	65	-89%	162	128	-21%
IN83	0.20	1.042	561	74	-87%	160	139	-13%
IN91	0.18	1.027	534	111	-79%	155	201	29%
INLO	0.15	1.019	428	73	-83%	134	141	5%
IN07	0.26	1.016	732	139	-81%	194	269	39%
INAV	0.23	1.003	679	118	-83%	184	244	33%
INAF	0.47	0.989	1287	108	-92%	293	250	-15%

Kimley-Horn and Associates, Inc.

Summary of Subbasin Discharges from the Glendale/Peoria Model.

Drainage ID	100-year				10-year			
	Controling Storm (hr)	Existing Discharge (cfs)	Future Discharge (cfs)	Difference (cfs)	Controling Storm (hr)	Existing Discharge (cfs)	Future Discharge (cfs)	Difference (cfs)
83RS	6	981	1021	40	6	471	511	40
AC35	6	747	747	0	6	392	392	0
AC43	6	172	172	0	6	81	81	0
AC51	6	285	284	-1	6	164	164	0
AC59	6	402	403	1	6	225	227	2
AC67	6	397	397	0	6	210	210	0
AC75	6	440	461	21	6	211	226	15
AF11	6	552	650	98	6	300	364	64
BL15	6	730	738	8	24	299	268	-31
BL35	6	859	859	0	6	433	433	0
BL43	6	731	731	0	6	380	380	0
BL51	6	684	684	0	6	329	329	0
BL59	6	756	773	17	6	368	376	8
BL67	6	189	184	-5	6	90	91	1
BL75	6	649	649	0	6	284	284	0
BL91	6	936	947	11	6	490	501	11
BL99	6	916	916	0	6	429	429	0
BLAF	6	89	92	3	6	46	49	3
BLLO	6	585	585	0	6	287	287	0
BLNR	6	537	555	18	6	254	271	17
BN99	6	858	858	0	24	389	345	-44
BY07	6	549	564	15	6	250	262	12
BY87	6	938	938	0	6	464	464	0
BY91	6	575	575	0	6	257	257	0
BYAF	6	401	450	49	6	166	196	30
BYNR	6	787	809	22	24	344	318	-26
CL07	6	412	431	19	6	167	186	19
CL67	6	164	166	2	6	69	71	2
CL77	6	296	288	-8	6	110	116	6
CLAF	6	218	259	41	6	78	113	35
CT35	6	619	618	-1	6	321	324	3
CT43	6	707	707	0	6	367	367	0
CT51	6	669	809	140	6	301	416	115
DV07	6	520	518	-2	6	219	218	-1
DV56	6	410	410	0	6	201	201	0
DV67	6	935	935	0	6	469	469	0
DV75	6	349	349	0	6	156	156	0
DV83	6	81	81	0	6	42	42	0
DV87	6	1142	1142	0	24	511	465	-46
DV99	24	1030	1014	-16	24	390	390	0
DVAF	6	406	411	5	6	161	165	4
DVLP	6	76	81	5	6	32	37	5
DVNR	6	280	280	0	6	125	125	0
DW07	6	325	325	0	6	154	154	0
DW99	6	140	140	0	6	69	69	0
SK67	6	691	704	13	24	288	259	-29
GHAF	6	207	722	515	6	93	398	305
GHNR	6	494	598	104	6	209	281	72
GL03	6	531	605	74	6	246	317	71

Kimley-Horn and Associates, Inc.

Summary of Subbasin Discharges from the Glendale/Peoria Model.

Drainage ID	100-year				10-year			
	Controling Storm (hr)	Existing Discharge (cfs)	Future Discharge (cfs)	Difference (cfs)	Controling Storm (hr)	Existing Discharge (cfs)	Future Discharge (cfs)	Difference (cfs)
GL11	6	409	416	7	6	207	212	5
GL14	6	205	597	392	6	68	332	264
GLAF	6	310	375	65	6	160	205	45
GLGH	6	85	109	24	6	34	62	28
GR99	6	742	742	0	6	431	431	0
GRAF	6	578	593	15	6	277	289	12
GRNR	6	852	978	126	6	374	474	100
GW35	6	679	679	0	6	367	367	0
GW43	6	681	679	-2	6	325	327	2
GW51	6	549	549	0	6	255	255	0
GW59	6	666	673	7	6	339	347	8
GW67	6	665	667	2	6	331	338	7
GW91	6	503	505	2	6	239	241	2
GWLO	6	975	981	6	6	499	503	4
GWNR	6	481	501	20	6	209	224	15
HV01	6	522	562	40	6	246	286	40
HV07	6	449	477	28	6	182	224	42
HV55	24	1404	1267	-137	24	630	522	-108
HV67	6	726	722	-4	6	371	371	0
HV75	6	658	665	7	24	275	240	-35
HV83	6	44	50	6	6	19	25	6
HV87	6	588	593	5	6	294	298	4
HV93	6	235	233	-2	6	108	106	-2
HVAF	6	289	310	21	6	102	145	43
HVLP	6	187	196	9	6	90	96	6
HVNR	6	74	74	0	6	25	25	0
HVRS	6	351	409	58	6	120	171	51
JM75	24	1091	1073	-18	24	444	436	-8
JM76	6	108	118	10	6	36	50	14
JM80	6	147	167	20	6	52	77	25
JM99	6	737	745	8	6	382	396	14
JMAF	6	165	164	-1	6	65	71	6
JMLP	6	744	798	54	6	329	373	44
JMNR	6	54	57	3	6	17	21	4
JMRS	6	510	528	18	6	207	229	22
PEAF	6	674	674	0	6	336	336	0
LO51	6	722	744	22	6	363	377	14
LO67	6	1015	1015	0	24	471	412	-59
LO75	6	825	825	0	6	373	373	0
MEAF	24	1006	1057	51	24	435	456	21
NO07	6	252	249	-3	6	109	109	0
NO11	6	954	968	14	6	465	479	14
NO99	6	385	424	39	6	188	221	33
NOAF	6	153	208	55	6	61	88	27
NONR	6	516	533	17	6	271	295	24
OL03	6	704	704	0	6	329	329	0
OL11	6	275	274	-1	6	117	116	-1
OL99	6	263	265	2	6	114	116	2
OLAF	6	436	500	64	6	190	218	28

Kimley-Horn and Associates, Inc.

Summary of Subbasin Discharges from the Glendale/Peoria Model.

Drainage ID	100-year				10-year			
	Controling Storm (hr)	Existing Discharge (cfs)	Future Discharge (cfs)	Difference (cfs)	Controling Storm (hr)	Existing Discharge (cfs)	Future Discharge (cfs)	Difference (cfs)
OLNR	6	420	428	8	6	225	234	9
PE03	6	244	244	0	6	106	106	0
PE07	6	310	310	0	6	136	136	0
PE11	6	474	474	0	6	254	254	0
PE35	6	526	526	0	6	290	290	0
PE43	6	546	546	0	6	285	285	0
PE97	6	379	384	5	6	164	168	4
PE99	6	120	120	0	6	60	60	0
PENR	6	152	186	34	6	77	98	21
CL57	6	636	663	27	6	270	287	17
PP03	6	147	147	0	6	66	66	0
PP07	6	179	181	2	6	70	73	3
PP67	6	45	45	0	6	16	16	0
PP73	6	405	405	0	6	162	162	0
PP75	6	348	354	6	6	141	156	15
PP77	6	130	125	-5	6	47	48	1
PP81	6	220	220	0	6	90	90	0
PP87	6	1010	1005	-5	24	394	348	-46
PP91	6	94	94	0	6	37	37	0
PPAF	6	541	541	0	6	306	306	0
PPLP	6	434	624	190	6	160	273	113
PPNR	6	94	92	-2	6	34	34	0
JM67	6	359	357	-2	6	163	164	1
JM63	6	783	793	10	6	316	325	9
RG07	6	214	241	27	6	78	109	31
RG93	6	185	185	0	6	81	81	0
RGAF	6	210	210	0	6	84	84	0
RGLP	6	334	320	-14	6	135	151	16
RO99	6	226	226	0	6	115	115	0
TB35	6	617	617	0	6	355	355	0
TB43	6	635	635	0	6	326	326	0
TB51	6	577	577	0	6	276	276	0
TB59	6	625	650	25	6	300	331	31
TB99	6	678	678	0	6	301	301	0
TBNR	6	831	837	6	24	363	321	-42
TL07	6	382	382	0	6	162	162	0
WL67	6	50	50	0	6	18	18	0
UH07	6	109	109	0	6	49	49	0
UH15	6	810	980	170	24	330	420	90
UH35	6	1037	1037	0	6	563	563	0
UH43	6	643	646	3	6	307	309	2
UH51	6	528	532	4	6	275	279	4
UHSK	6	624	646	22	24	256	237	-19
UH75	6	485	485	0	6	278	278	0
UH87	6	1025	1025	0	6	503	503	0
UH91	6	437	437	0	6	225	225	0
UH99	6	386	386	0	6	197	197	0
UHAF	6	174	174	0	6	86	86	0
UHLO	6	758	758	0	6	336	336	0

Kimley-Horn
and Associates, Inc.

Summary of Subbasin Discharges from the Glendale/Peoria Model.

Drainage ID	100-year				10-year			
	Controling Storm (hr)	Existing Discharge (cfs)	Future Discharge (cfs)	Difference (cfs)	Controling Storm (hr)	Existing Discharge (cfs)	Future Discharge (cfs)	Difference (cfs)
UHNR	6	312	316	4	6	145	148	3
UH97	6	178	178	0	6	77	77	0
UH67	6	589	608	19	6	271	287	16
WL59	6	333	333	0	6	137	137	0
WL75	6	387	387	0	6	167	167	0
WL83	6	112	112	0	6	56	56	0
WLNR	6	283	339	56	6	105	153	48
WWBR	6	329	330	1	6	172	173	1
WWLP	6	302	329	27	6	155	194	39
WWRS	6	147	147	0	6	66	66	0
YLLP	6	546	560	14	6	241	253	12

Kimley-Horn and Associates, Inc.

Summary of Combination Point Discharges from the Glendale/Peoria Model.

Drainage ID	100-year				10-year			
	Controling Storm (hr)	Existing Discharge (cfs)	Future Discharge (cfs)	Difference (cfs)	Controling Storm (hr)	Existing Discharge (cfs)	Future Discharge (cfs)	Difference (cfs)
CBL15	24	1786	1458	-328	24	613	379	-234
CBL35	6	824	824	0	6	415	415	0
CBL43	6	1032	1033	1	6	428	428	0
CBL51	6	948	948	0	24	371	347	-24
CBL59	6	885	795	-90	6	153	117	-36
CBL67	6	149	122	-27	6	22	3	-19
CBL91	24	784	800	16	24	180	180	0
CBL99	24	851	811	-40	24	425	380	-45
CBLLO	24	133	131	-2	24	0	0	0
CBN99	24	1615	1541	-74	24	793	709	-84
CBY07	24	324	140	-184	24	60	0	-60
CBY87	24	919	932	13	24	411	402	-9
CBY91	6	71	77	6	24	0	0	0
CBYAF	6	349	310	-39	24	124	28	-96
CCL57	24	1111	894	-217	24	14	2	-12
CCL67	6	587	467	-120	6	157	50	-107
CCL77	24	800	333	-467	24	134	5	-129
CCLAF	24	1052	978	-74	24	211	130	-81
CCT35	6	692	702	10	6	304	305	1
CCT43	6	1179	1177	-2	24	423	408	-15
CCT51	6	1404	1404	0	24	365	369	4
CDV07	6	244	133	-111	6	56	0	-56
CDV56	24	1088	900	-188	24	163	151	-12
CDV83	6	202	197	-5	6	72	70	-2
CDV87	24	1060	1037	-23	24	508	462	-46
CDV99	24	1291	62	-1229	24	411	0	-411
CDVAF	6	535	NA*	NA*	6	135	NA*	NA*
CDVLP	6	216	39	-177	6	51	0	-51
CDW07	6	823	825	2	6	422	425	3
CDW99	6	589	596	7	6	287	290	3
CGL11	6	274	232	-42	6	65	45	-20
CGL14	24	1006	1056	50	24	409	400	-9
CGLAF	24	1146	1206	60	24	468	457	-11
CGR99	6	1142	1144	2	6	560	561	1
CGW35	6	844	844	0	6	382	382	0
CGW43	6	1294	1296	2	6	449	451	2
CGW51	6	1381	1338	-43	24	467	428	-39
CGW59	24	1474	1387	-87	24	355	345	-10
CGW67	6	820	802	-18	24	134	129	-5
CGW91	24	634	656	22	24	229	235	6
CHV01	24	1067	961	-106	24	237	174	-63
CHV75	24	269	291	22	24	1	0	-1
CHVLP	6	260	241	-19	6	63	41	-22
CHVRS	24	715	380	-335	24	136	5	-131
CILO75	24	672	664	-8	24	264	259	-5
CIUH91	6	509	501	-8	6	199	201	2
CJM67	6	320	343	23	24	2	0	-2
CJMLP	6	675	596	-79	6	1	0	-1
CJMRS	6	394	288	-106	24	1	1	0

Kimley-Horn and Associates, Inc.

Summary of Combination Point Discharges from the Glendale/Peoria Model.

Drainage ID	100-year				10-year			
	Controling Storm (hr)	Existing Discharge (cfs)	Future Discharge (cfs)	Difference (cfs)	Controling Storm (hr)	Existing Discharge (cfs)	Future Discharge (cfs)	Difference (cfs)
CLO51	24	1192	998	-194	24	403	400	-3
CLO67	24	1470	1393	-77	24	695	621	-74
CLO75	24	1011	973	-38	24	433	404	-29
CMEAF	24	2220	1771	-449	24	734	673	-61
CNO11	6	1050	1038	-12	24	481	415	-66
CNONR	6	470	409	-61	6	121	62	-59
COL03	24	1434	1372	-62	24	674	649	-25
COLNR	6	401	428	27	24	134	111	-23
CPE35	6	706	703	-3	6	316	317	1
CPE43	6	1242	1228	-14	24	436	436	0
CPP03	6	147	450	303	6	64	61	-3
CPP07	6	179	462	283	6	70	64	-6
CPP73	24	717	572	-145	24	187	105	-82
CPP77	24	855	342	-513	24	152	5	-147
CPP87	24	1189	653	-536	6	258	263	5
CPPLP	24	464	440	-24	6	89	47	-42
CRG07	24	1121	111	-1010	24	255	0	-255
CRG93	6	25	NA*	NA*	24	0	NA*	NA*
CRGAF	24	1225	148	-1077	24	235	18	-217
CRGLP	24	1222	50	-1172	24	378	0	-378
CTB35	6	824	824	0	6	352	352	0
CTB43	6	1232	1233	1	24	398	377	-21
CTB51	6	1367	1350	-17	24	374	355	-19
CTB59	24	1615	1561	-54	24	313	324	11
CTB99	24	2121	2046	-75	24	1066	958	-108
CTL07	6	483	485	2	24	142	128	-14
CUH15	6	827	756	-71	24	295	37	-258
CUH43	6	612	615	3	24	210	211	1
CUH51	24	403	384	-19	24	26	30	4
CUH75	24	209	227	18	24	0	0	0
CUH87	24	1206	1163	-43	24	384	373	-11
CUH91	6	406	409	3	6	198	201	3
CUH99	6	354	358	4	6	180	182	2
CWL59	24	1060	876	-184	24	101	91	-10
CWL67	6	26	26	0	24	0	0	0
CWL75	6	534	419	-115	6	73	43	-30
CWL83	6	122	122	0	6	42	42	0
CWWRS	6	236	237	1	24	1	1	0

Notes:

* These concentration points are not part of the future conditions model because of the construction of the Pinnacle Peak channel.

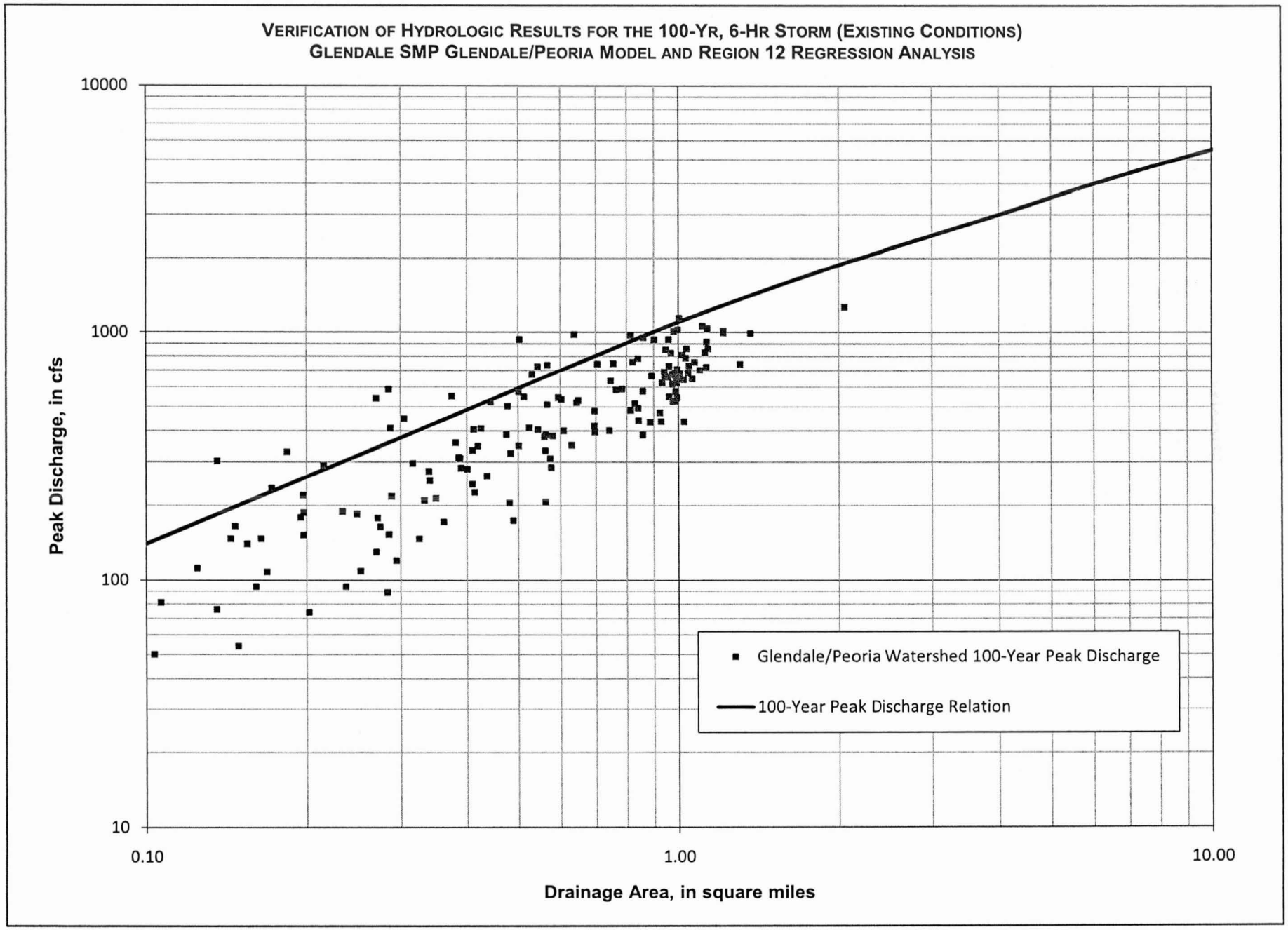

Based on Figure 8.8 from DDM

Kimley-Horn and Associates, Inc.

Project: ***Glendale Stormwater Management Plan***
Subject: **Regression Analysis**
Model: **Glendale/Peoria**
Designed by: **MAF** Date 2/24/2010 KHA Project No. 091910009
Checked by: **AOM** Date 3/15/2010 City of Glendale No. 089017

Objective: To compare the results of the HEC-1 model with regression analysis approximation

Flood Magnitude-Frequency Relations for the Central AZ Region (R12)

Recurrence interval, in years	Equation	Average standard error of model, in percent
10	$Q = 479\ AREA^{0.661}\ ELEV^{-0.398}$	52
100	$LOG_{10}\ Q = 6.55 - 3.17\ AREA^{-0.11} - 0.454\ LOG_{10}\ ELEV$	39

Notes:

Obtained from Table 8.2 in the Flood Control District of Maricopa County's *Drainage Design Manual - Hydrology*, November 2009.

Where: *Q* = peak discharge, in cubic feet per second
AREA = drainage area, in square miles
ELEV = mean basin elevation, in feet divided by 1,000

Peak Discharge Comparison for the 6-hour storm event.

Subbasin Parameters			10-Year Peak Discharge			100-Year Peak Discharge		
Subbasin ID	Area (sq mi)	Mean Elev (ft/1000)	From Regression (cfs)	From HEC-1 (cfs)	Percent Difference	From Regression (cfs)	From HEC-1 (cfs)	Percent Difference
UH35	1.14	1.361	2308	563	-76%	461	1037	125%
BL35	1.14	1.341	2330	433	-81%	465	859	85%
GW35	1.01	1.317	2131	367	-83%	432	679	57%
TB35	0.98	1.296	2091	355	-83%	425	617	45%
CT35	0.98	1.277	2106	321	-85%	428	619	45%
PE35	0.98	1.259	2121	290	-86%	431	526	22%
AC35	0.75	1.240	1730	392	-77%	365	747	105%
UH43	1.02	1.335	2146	307	-86%	434	643	48%
BL43	1.05	1.317	2200	380	-83%	443	731	65%
GW43	0.99	1.298	2109	325	-85%	428	681	59%
TB43	0.99	1.279	2137	326	-85%	433	635	47%
CT43	1.00	1.258	2155	367	-83%	436	707	62%
PE43	1.00	1.243	2168	285	-87%	438	546	25%
AC43	0.36	1.227	922	81	-91%	225	172	-24%
UH51	0.99	1.313	2103	275	-87%	427	528	24%
BL51	1.04	1.295	2209	329	-85%	445	684	54%
GW51	0.96	1.274	2083	255	-88%	424	549	29%
TB51	0.99	1.258	2145	276	-87%	434	577	33%
CT51	0.99	1.240	2154	301	-86%	436	669	53%
AC51	0.58	1.227	1386	164	-88%	307	285	-7%
BL59	1.07	1.273	2278	368	-84%	456	756	66%
GW59	0.94	1.254	2066	339	-84%	421	666	58%
TB59	0.99	1.238	2168	300	-86%	438	625	43%
AC59	0.74	1.225	1716	225	-87%	363	402	11%
BL67	0.23	1.250	610	90	-85%	167	189	13%
GW67	0.89	1.238	1985	331	-83%	408	665	63%
AC67	0.70	1.224	1630	210	-87%	348	397	14%
AC75	0.84	1.223	1904	211	-89%	395	440	12%

Kimley-Horn and Associates, Inc.

Peak Discharge Comparison for the 6-hour storm event.

Subbasin Parameters			10-Year Peak Discharge			100-Year Peak Discharge		
Subbasin ID	Area (sq mi)	Mean Elev (ft/1000)	From Regression (cfs)	From HEC-1 (cfs)	Percent Difference	From Regression (cfs)	From HEC-1 (cfs)	Percent Difference
HV55	2.05	1.533	3445	477	-86%	650	1265	94%
CL57	0.75	1.431	1605	270	-83%	342	636	86%
WL59	0.56	1.422	1269	137	-89%	285	333	17%
DV56	0.29	1.441	694	201	-71%	181	410	126%
LO51	1.13	1.363	2297	363	-84%	459	722	57%
UHSK	0.93	1.284	2026	254	-87%	414	624	51%
SK67	0.94	1.252	2065	283	-86%	421	691	64%
UH67	0.78	1.266	1769	271	-85%	371	589	59%
UH75	0.81	1.243	1839	278	-85%	383	485	27%
BL75	1.06	1.228	2295	284	-88%	460	649	41%
UHLO	0.82	1.244	1853	336	-82%	386	758	97%
BLLO	0.76	1.218	1763	287	-84%	371	585	58%
GWLO	0.81	1.195	1872	499	-73%	390	975	150%
JM63	0.84	1.512	1727	316	-82%	362	783	116%
JM67	0.38	1.501	881	163	-82%	215	359	67%
HV75	0.96	1.382	2001	262	-87%	409	658	61%
JM75	1.11	1.462	2197	385	-82%	442	1061	140%
JM76	0.17	1.386	426	36	-92%	130	108	-17%
JM80	0.16	1.395	415	52	-87%	127	147	16%
JMNR	0.15	1.388	377	17	-95%	119	54	-55%
HVNR	0.20	1.358	512	25	-95%	147	74	-50%
HV67	0.54	1.515	1198	371	-69%	271	726	167%
CL67	0.27	1.393	677	69	-90%	179	164	-8%
PP67	0.10	1.354	245	16	-93%	90	45	-50%
PP73	0.54	1.341	1268	162	-87%	285	405	42%
PP75	0.42	1.349	1007	141	-86%	239	348	45%
PPNR	0.24	1.325	602	34	-94%	165	94	-43%
WL67	0.10	1.351	264	18	-93%	95	50	-47%
WL75	0.47	1.319	1134	167	-85%	262	387	48%
WWBR	0.18	1.478	451	172	-62%	134	329	146%
WWRS	0.14	1.420	361	66	-82%	116	147	27%
JMRS	0.57	1.434	1273	207	-84%	285	510	79%
83RS	0.64	1.448	1400	471	-66%	307	981	220%
HVRS	0.63	1.360	1426	120	-92%	312	351	12%
HV83	0.03	1.433	78	19	-76%	45	44	-3%
CL77	0.32	1.339	784	110	-86%	199	296	49%
PP77	0.27	1.322	682	47	-93%	180	130	-28%
WLNR	0.39	1.304	959	105	-89%	231	283	22%
DV75	0.50	1.303	1195	156	-87%	273	349	28%
DVNR	0.40	1.291	987	125	-87%	236	280	18%
DV67	0.50	1.350	1181	469	-60%	270	935	246%
LO67	1.22	1.280	2507	450	-82%	494	1015	105%
LO75	0.97	1.273	2097	373	-82%	426	825	94%
PP81	0.20	1.323	506	90	-82%	146	220	50%
WL83	0.12	1.307	325	56	-83%	109	112	3%
HV87	0.29	1.555	666	294	-56%	175	588	235%
PP87	0.98	1.347	2064	352	-83%	420	1010	140%
PP91	0.16	1.329	415	37	-91%	128	94	-26%
DV83	0.11	1.294	278	42	-85%	98	81	-18%
BYNR	1.03	1.269	2211	335	-85%	445	787	77%

Kimley-Horn and Associates, Inc.

Peak Discharge Comparison for the 6-hour storm event.

Subbasin Parameters			10-Year Peak Discharge			100-Year Peak Discharge		
Subbasin ID	Area (sq mi)	Mean Elev (ft/1000)	From Regression (cfs)	From HEC-1 (cfs)	Percent Difference	From Regression (cfs)	From HEC-1 (cfs)	Percent Difference
DV87	1.00	1.298	2137	502	-77%	433	1142	164%
BY87	0.96	1.266	2084	464	-78%	424	938	121%
UH87	1.00	1.237	2175	503	-77%	440	1025	133%
UHNR	0.39	1.241	971	145	-85%	234	312	33%
BLNR	0.60	1.220	1443	254	-82%	317	537	70%
RG93	0.25	1.276	641	81	-87%	173	185	7%
BY91	0.50	1.259	1214	257	-79%	277	575	108%
UH91	0.93	1.237	2052	225	-89%	419	437	4%
BL91	0.90	1.213	2020	490	-76%	414	936	126%
GW91	0.48	1.191	1193	239	-80%	274	503	84%
GWNR	0.70	1.187	1649	209	-87%	352	481	37%
TBNR	1.12	1.169	2452	353	-86%	486	831	71%
HV93	0.17	1.458	425	108	-75%	129	235	83%
PPLP	0.89	1.338	1905	160	-92%	394	434	10%
DV99	1.22	1.300	2489	311	-88%	491	996	103%
RGLP	0.41	1.275	1012	135	-87%	241	334	39%
BY07	0.51	1.252	1242	250	-80%	282	549	95%
UH99	0.56	1.234	1355	197	-85%	301	386	28%
UH97	0.27	1.236	708	77	-89%	186	178	-4%
DW99	0.15	1.223	415	69	-83%	129	140	9%
BL99	1.13	1.212	2428	429	-82%	482	916	90%
BN99	1.04	1.195	2279	386	-83%	457	858	88%
TB99	0.98	1.174	2186	301	-86%	442	678	53%
DW07	0.48	1.221	1194	154	-87%	274	325	19%
TL07	0.58	1.189	1413	162	-89%	312	382	22%
RO99	0.41	1.155	1068	115	-89%	252	226	-10%
GR99	1.31	1.163	2772	431	-84%	539	742	38%
GRNR	0.95	1.148	2157	374	-83%	438	852	95%
PE99	0.29	1.138	791	60	-92%	203	120	-41%
PENR	0.20	1.127	545	77	-86%	156	152	-3%
PE97	0.56	1.128	1404	164	-88%	311	379	22%
PE11	0.92	1.138	2123	254	-88%	432	474	10%
PE07	0.57	1.134	1432	136	-91%	316	310	-2%
PE03	0.41	1.136	1066	106	-90%	252	244	-3%
OL03	1.10	1.118	2460	329	-87%	488	704	44%
OLNR	0.70	1.112	1698	225	-87%	361	420	16%
OL99	0.44	1.109	1140	114	-90%	266	263	-1%
NONR	0.83	1.097	1977	271	-86%	408	516	26%
NO99	0.86	1.098	2032	188	-91%	417	385	-8%
GL03	0.65	1.078	1624	246	-85%	349	531	52%
GLGH	0.08	1.078	220	34	-85%	87	85	-2%
GHNR	0.84	1.048	2040	209	-90%	419	494	18%
AF11	0.38	1.041	1025	300	-71%	246	552	124%
GHAF	0.56	1.047	1459	93	-94%	322	207	-36%
JMAF	0.15	1.359	375	65	-83%	119	165	38%
HV07	0.30	1.333	759	182	-76%	195	449	131%
HVAF	0.22	1.256	565	102	-82%	159	289	82%
JM99	0.57	1.400	1288	382	-70%	288	737	156%
WWLP	0.14	1.451	337	155	-54%	110	302	174%
JMLP	0.71	1.413	1540	329	-79%	331	744	125%

Kimley-Horn and Associates, Inc.

Peak Discharge Comparison for the 6-hour storm event.

Subbasin Parameters			10-Year Peak Discharge			100-Year Peak Discharge		
Subbasin ID	Area (sq mi)	Mean Elev (ft/1000)	From Regression (cfs)	From HEC-1 (cfs)	Percent Difference	From Regression (cfs)	From HEC-1 (cfs)	Percent Difference
YLLP	0.60	1.421	1332	241	-82%	296	546	85%
HVLP	0.20	1.365	501	90	-82%	145	187	29%
HV01	0.44	1.359	1055	246	-77%	248	522	111%
CL07	0.52	1.313	1238	167	-87%	280	412	47%
CLAF	0.29	1.246	745	78	-90%	193	218	13%
PP03	0.33	1.316	811	66	-92%	204	147	-28%
PP07	0.20	1.287	508	70	-86%	147	179	22%
DVAF	0.41	1.250	1027	161	-84%	244	406	66%
PPAF	0.27	1.227	705	306	-57%	186	541	191%
DV07	0.64	1.281	1494	219	-85%	325	520	60%
DVLP	0.14	1.291	355	32	-91%	115	76	-34%
RG07	0.35	1.262	883	78	-91%	218	214	-2%
RGAF	0.33	1.237	851	84	-90%	213	210	-1%
BYAF	0.61	1.216	1457	166	-89%	319	401	26%
UHAF	0.49	1.181	1224	86	-93%	280	174	-38%
UH07	0.25	1.235	661	49	-93%	177	109	-39%
UH15	1.02	1.210	2234	312	-86%	450	810	80%
BL15	0.96	1.198	2142	288	-87%	434	730	68%
MEAF	1.37	1.169	2864	375	-87%	554	991	79%
BLAF	0.28	1.164	755	46	-94%	196	89	-55%
GRAF	0.86	1.161	1982	277	-86%	408	578	42%