A450.923

Line Layout
&
Shop Drawings

Project: Cactus Road Storm Drain
83rd Ave to 75th Ave

Agency: Maricopa County Flood

Contractor: Pulice Construction

Date: March 13th, 1996

Hydro Conduit Corporation
4242 West Buckeye Road
Phoenix, Arizona 85009
602-278-3526

Line Layout
&
Shop Drawings

Project: Cactus Road Storm Drain
83rd Ave to 75th Ave

Agency: Maricopa County Flood

Contractor: Pulice Construction

Date: March 13th, 1996

Hydro Conduit Corporation
4242 West Buckeye Road
Phoenix, Arizona 85009
602-278-3526

26-Mar-96

PROJECT: Cactus Road Storm Drain
83rd to 75th Ave

OR: Pulice Construction

PCS	JT#			DESCRIPTION	STD L.L.	FOOTAGE	STATION	REMARKS
2	1	TO	2	120" x 8' RGRCP 12' Cover	8.07	16.14	7501.5	o existing 120"
1	3	TO	3	120" x 8' RGRCP 12' Cover with 15" Tee Dwg #1	8.07	8.07	7517.64	
25	4	TO	28	120" x 8' RGRCP 12' Cover	8.07	201.75	7525.71	
1	29	TO	29	120" x 8' RGRCP 12' Cover with 15" Tee Dwg #2	8.07	8.07	7727.46	
7	30	TO	36	120" x 8' RGRCP 12' Cover	8.07	56.49	7735.53	
1	37	TO	37	120" x 8' RGRCP 12' Cover with 15" Tee Dwg #3	8.07	8.07	7792.02	
28	38	TO	65	120" x 8' RGRCP 12' Cover	8.07	225.96	7800.09	
1	66	TO	66	120" x 8' RGRCP 12' Cover with 15" Tee Dwg #4	8.07	8.07	8026.05	
7	67	TO	73	120" x 8' RGRCP 12' Cover Joint # 73 w/ 15" Tee Dwg#4a	8.07	56.49	8034.12	
1	74	TO	74	120" x 8' RGRCP 12' Cover with 48" Manhole Tee Dwg #5	8.07	8.07	8090.61	
31	75	TO	105	120" x 8' RGRCP 12' Cover	8.07	250.17	8098.68	
1	106	TO	106	120" x 8' RGRCP 12' Cover with 15" Tee Dwg #6	8.07	8.07	8348.85	
39	107	TO	145	120" x 8' RGRCP 12' Cover	8.07	314.73	8356.92	
1	146	TO	146	120" x 8' RGRCP 12' Cover with 15" Tee Right/ 24" Tee Left Dwg #7	8.07	8.07	8671.65	
6	147	TO	152	120" x 8' RGRCP 12' Cover	8.07	48.42	8679.72	
1	153	TO	153	120" x 8' RGRCP 12' Cover with 36" Tee Dwg #8	8.07	8.07	8728.14	
2	154	TO	155	120" x 8' RGRCP 12' Cover	8.07	16.14	8736.21	
1	156	TO	156	120" x 8' RGRCP 12' Cover with 48" Manhole Tee Dwg #5	8.07	8.07	8752.35	
2	157	TO	158	120" x 8' RGRCP 12' Cover	8.07	16.14	8760.42	
1	159	TO	159	120" x 8' RGRCP 12' Cover with 15" Tee Dwg #9	8.07	8.07	8776.56	
4	160	TO	163	120" x 8' RGRCP 12' Cover	8.07	32.28	8784.63	
1	164	TO	164	120" x 8' RGRCP 12' Cover with 15" Tee Dwg #10	8.07	8.07	8816.91	
21	165	TO	185	120" x 8' RGRCP 12' Cover	8.07	169.47	8824.98	
1	186	TO	186	120" x 8' RGRCP 12' Cover with 15" Tee Dwg #11	8.07	8.07	8994.45	
							9002.52	

26-Mar-96

PROJECT: Cactus Road Storm Drain
83rd to 75th Ave

OR: Pulice Construction

PCS	JT#			DESCRIPTION	STD L.L.	FOOTAGE	STATION	REMARKS
51	187	TO	237	120" x 8' RGRCP 12' Cover	8.07	411.57		
							9414.09	
1	238	TO	238	120" x 8' RGRCP 12' Cover with 48" Manhole Tee Dwg #5	8.07	8.07		
							9422.16	
9	239	TO	247	120" x 8' RGRCP 12' Cover	8.07	72.63		
							9494.79	
1	248	TO	248	120" x 8' RGRCP 12' Cover w/ 15" Double Tee Dwg# 12	8.07	8.07		
							9502.86	
58	249	TO	306	120" x 8' RGRCP 12' Cover	8.07	468.06		
							9970.92	
1	307	TO	307	120" x 8' RGRCP 12' Cover with 15" Tee Dwg #13	8.07	8.07		
							9978.99	
9	308	TO	316	120" x 8' RGRCP 12' Cover	8.07	72.63		
							10051.62	
1	317	TO	317	120" x 8' RGRCP 12' Cover with 66" Tee Dwg #14	8.07	8.07		
							10059.69	
1	318	TO	318	120" x 108" x 8' RGRCP 12' Cover Transition Dwg # 15	8.07	8.07		
							10067.76	
1	319	TO	319	108" x 12' RGRCP 12' Cover w/ 48" Manhole Tee Dwg# 16	8.07	8.07		
							10075.83	
4	320	TO	323	108" x 12' RGRCP 12' Cover	12.03	48.12		
							10123.95	
1	324	TO	324	108" x 12' RGRCP 12' Cover w/ 15" Double Tee Dwg#17	12.03	12.03		
							10135.98	
38	325	TO	362	108" x 12' RGRCP 12' Cover	12.03	457.14		
							10593.12	
1	363	TO	363	108" x 12' RGRCP 12' Cover w/ 15" Double Tee Dwg#18	12.03	12.03		
							10605.15	
11	364	TO	374	108" x 12' RGRCP 12' Cover	12.03	132.33		
							10737.48	
1	375	TO	375	108" x 12' RGRCP 12' Cover w/ 48" Manhole Tee Dwg #19	12.03	12.03		
							10749.51	
45	376	TO	420	108" x 12' RGRCP 12' Cover	12.03	541.35		
							11290.86	
1	421	TO	421	108" x 12' RGRCP 12' Cover w/ 15" Double Tee Dwg#20	12.03	12.03		
							11302.89	
6	422	TO	427	108" x 12' RGRCP 12' Cover	12.03	72.18		
							11375.07	
1	428	TO	428	108" x 12' RGRCP 12' Cover w/ 48" Manhole Tee Dwg #19	12.03	12.03		
							11387.1	
18	429	TO	446	108" x 12' RGRCP 12' Cover	12.03	216.54		
							11603.64	
1	447	TO	447	108" x 12' RGRCP 12' Cover w/ 15" Tee Dwg#21	12.03	12.03		
							11615.67	
13	448	TO	460	108" x 12' RGRCP 12' Cover	12.03	156.39		
							11772.06	
1	461	TO	461	108" x 12' RGRCP 12' Cover w/ 15" Tee Dwg# 22	12.03	12.03		
							11784.09	
14	461	TO	474	108" x 12' RGRCP 12' Cover	12.03	168.42		
							11940.48	

26-Mar-96

PROJECT: Cactus Road Storm Drain
83rd to 75th Ave

OR: Pulice Construction

PCS	JT#			DESCRIPTION	STD L.L.	FOOTAGE	STATION	REMARKS
1	475	TO	475	108" x 12' RGRCP 12' Cover w/ 15" Double Tee Dwg# 23	12.03	12.03	11952.51	
7	476	TO	482	108" x 12' RGRCP 12' Cover	12.03	84.21	12036.72	
1	483	TO	483	108" x 12' RGRCP 12' Cover w/ 48" Manhole Tee Dwg #19	12.03	12.03	12048.75	
48	484	TO	531	108" x 12' RGRCP 12' Cover	12.03	577.44	12626.19	
1	532	TO	532	108" x 12' RGRCP 12' Cover w/ 24" Tee Dwg# 24	12.03	12.03	12638.22	
1	533	TO	533	108" x 12' RGRCP 12' Cover w/ 15" Tee Dwg# 25	12.03	12.03	12650.25	
4	534	TO	537	108" x 12' RGRCP 12' Cover	12.03	48.12	12698.37	
1	538	TO	538	108" x 12' RGRCP 12' Cover w/ 48" Manhole Tee Dwg #19	12.03	12.03	12710.4	
1	539	TO	539	108" x 12' RGRCP 12' Cover	12.03	12.03	12722.43	
1	540	TO	540	108" x 12' RGRCP 12' Cover w/ 42" Tee Dwg# 26	12.03	12.03	12734.46	
1	541	TO	541	108" x 84" x 12' Transition	12.03	12.03	12746.49	
4	542	TO	545	84" x 12' RGRCP 12' Cover	12.03	48.12	12794.61	
1	546	TO	546	84" x 12' RGRCP 12' Cover w/ 15" tee Dwg#27	12.03	12.03	12806.64	
1	547	TO	547	84" x 12' RGRCP 12' Cover w/ 15" tee Dwg#28	12.03	12.03	12818.67	
18	548	TO	565	84" x 12' RGRCP 12' Cover	12.03	216.54	13035.21	
1	566	TO	566	84" x 12' RGRCP 12' Cover w/ 15" tee Dwg#29	12.03	12.03	13047.24	
8	567	TO	574	84" x 12' RGRCP 12' Cover	12.03	96.24	13143.48	
1	575	TO	575	84" x 12' RGRCP 12' Cover w/ 15" tee Dwg#30	12.03	12.03	13155.51	
4	576	TO	579	84" x 12' RGRCP 12' Cover	12.03	48.12	13203.63	

CALCULATIONS

$A = R\ (\tan^{-1} \frac{H}{V})$

$B = R\ (\tan^{-1} \frac{V}{H})$

H = N/A

V =

R =

Round Reinforcement

MAINLINE

I.D. 120" CLASS 12' COVER

O.D. 140" WALL B

LATERAL

I.D. 15" CLASS 2000-D

O.D. 19½ WALL B

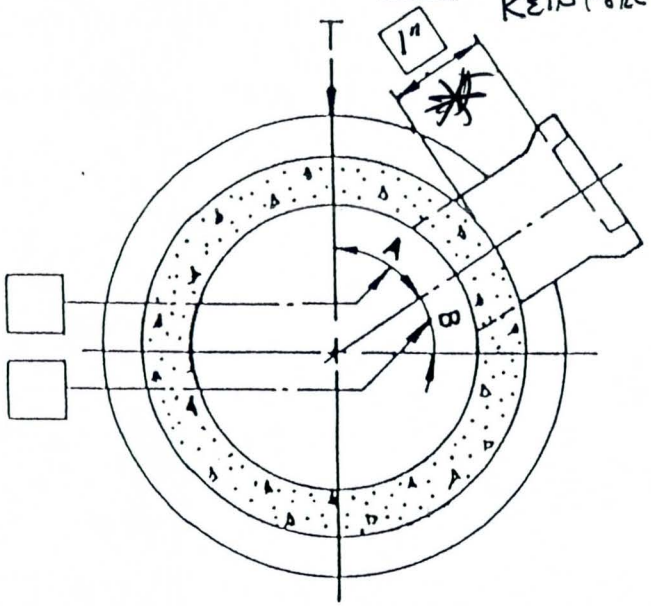

CROSS SECTION

FROM SPIGOT END

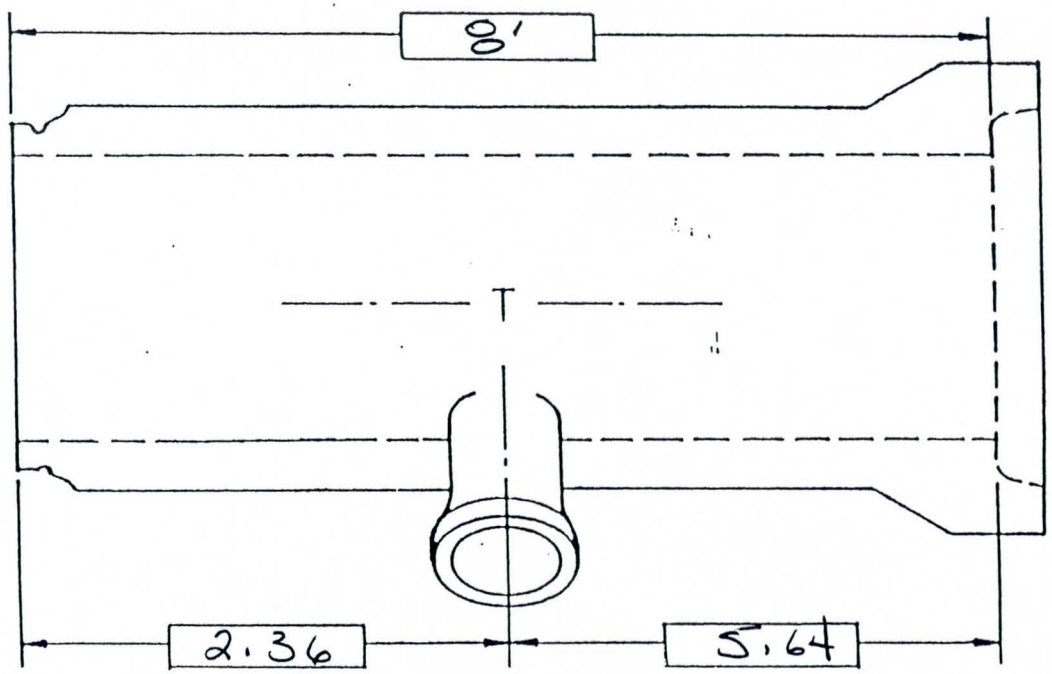

* Due to trench Box Limits - Contractor has Requested tee stubs extend out of Pipe NO More than 1" on All Tee's and Double Tee's -

PIPE JOINT NO.	LINE LAYOUT STA.	PLAN STA.	HCC JOB NO.	SCALE	DWG. NO.
3	75+20	75+20	Cactus	NTS	1

HYDRO CONDUIT CORPORATION	FACTORY MADE TEE RGRCP	BY	DATE	SHEET NO
		CK'D.	REV.	___ OF 1

CALCULATIONS

$A = R\ (\tan^{-1} \frac{H}{V})$ H = N/A

$B = R\ (\tan^{-1} \frac{V}{H})$ V = Round

R = Reinforcement

MAINLINE

I.D. 120" CLASS 12' Cou

O.D. 140" WALL A

LATERAL

I.D. 15' CLASS 2000-D

O.D. 19½ WALL B

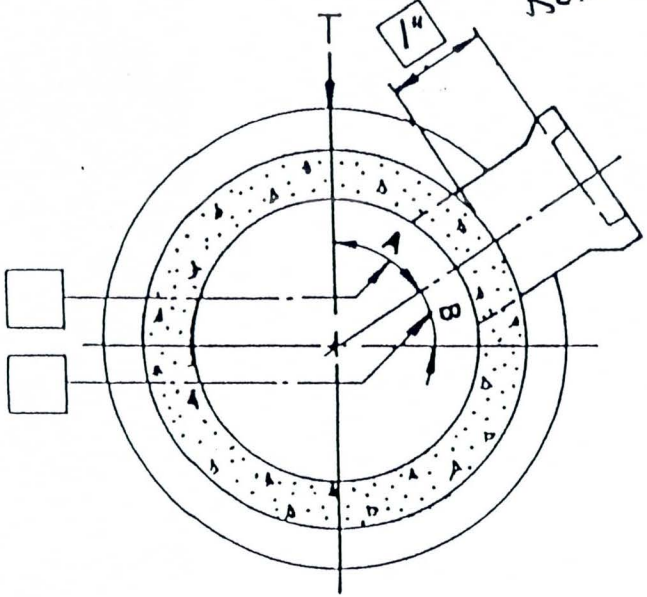

CROSS SECTION

FROM SPIGOT END

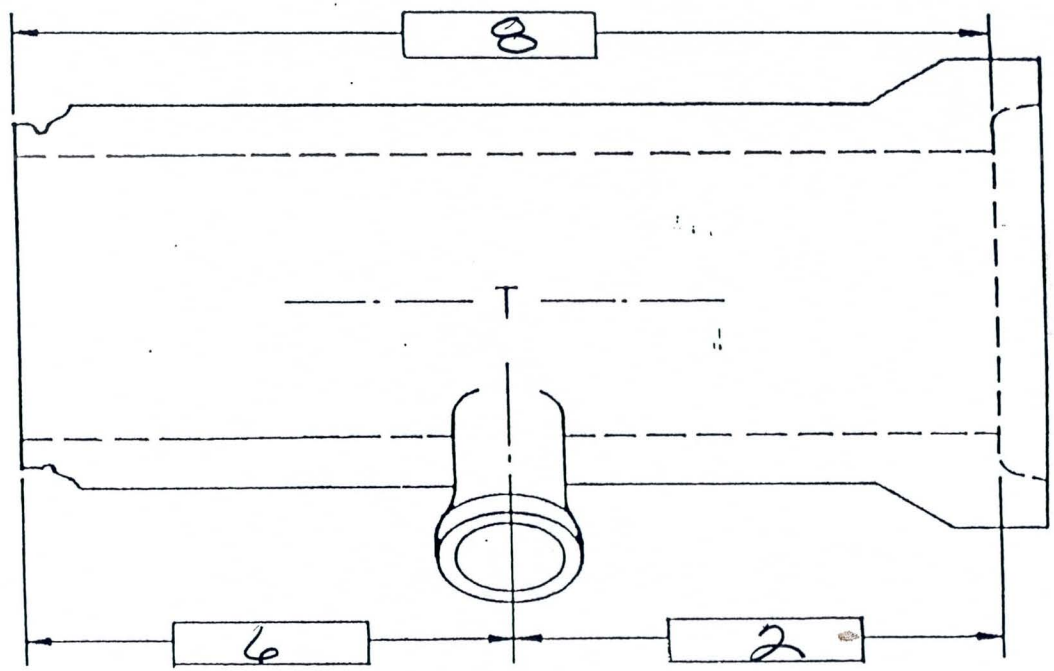

PIPE JOINT NO.	LINE LAYOUT STA.	PLAN STA.	HCC JOB NO.	SCALE	DWG. NO.
29	77+33 53	77+35	Cactus	NTS	2

HYDRO CONDUIT CORPORATION	FACTORY MADE TEE RGRCP	BY	DATE	SHEET NO
		CK'D.	REV.	___ OF 1

CALCULATIONS

$A = R\ (\tan^{-1} \frac{H}{V})$ H = N/A

$B = R\ (\tan^{-1} \frac{V}{H})$ V =

R =

Round Reinforcement

MAINLINE

I.D. 120" CLASS 12' Cou

O.D. 140" WALL A

LATERAL

I.D. 15" CLASS 2000-D

O.D. 19½" WALL B

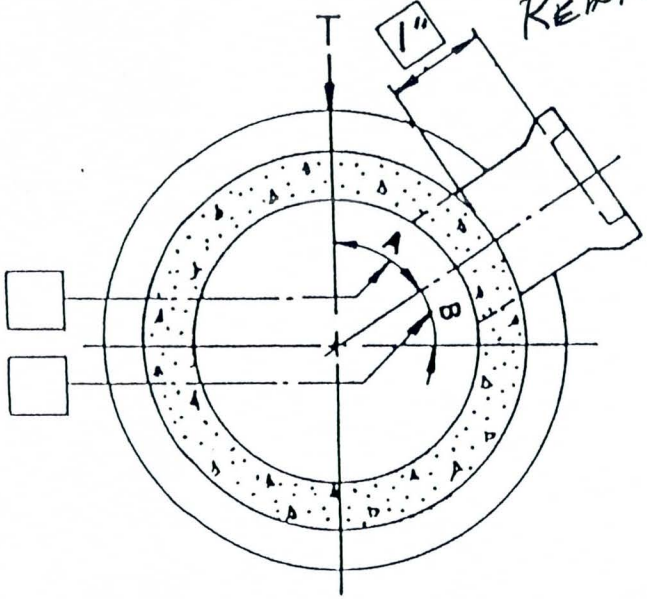

CROSS SECTION

FROM SPIGOT END

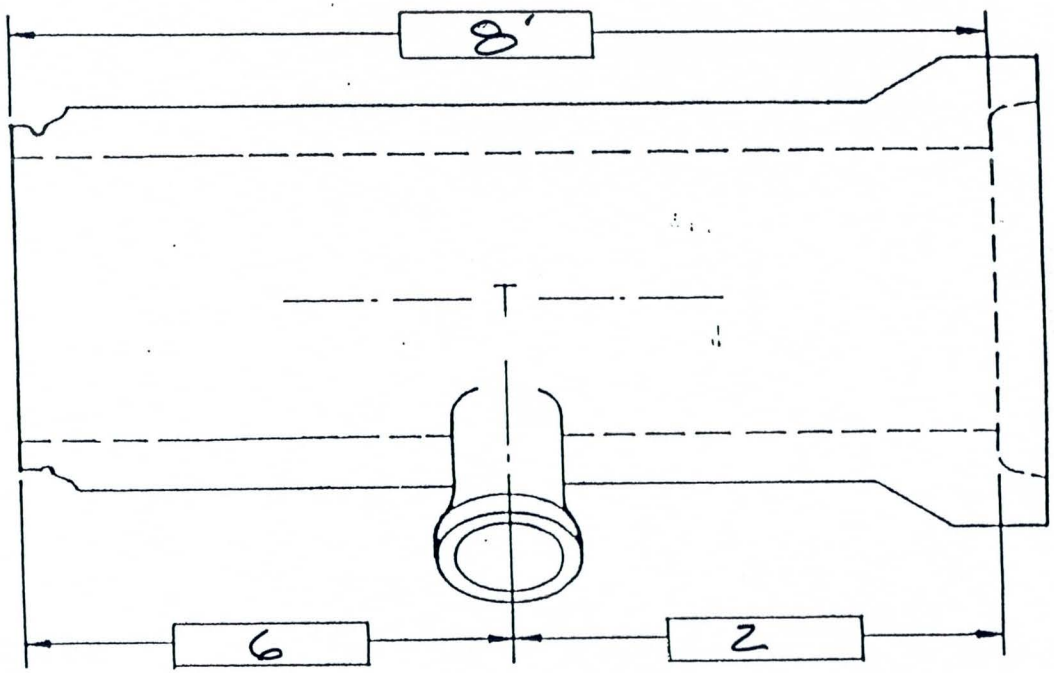

PIPE JOINT NO.	LINE LAYOUT STA.	PLAN STA.	HCC JOB NO.	SCALE	DWG. NO.
37	78 + 98.09	78 +00	Cactus	NTS	3

HYDRO CONDUIT CORPORATION	FACTORY MADE TEE RGRCP	BY	DATE	SHEET NO
		CK'D.	REV.	1 OF 1

CALCULATIONS

$A = R\ (\tan^{-1} \frac{H}{V})$ H = N/A

$B = R\ (\tan^{-1} \frac{V}{H})$ V = Round

R = Cage

MAINLINE

I.D. 120" CLASS 12' Cov

O.D. 140" WALL A

LATERAL ✓

I.D. 15" CLASS 2000-D

O.D. 19½ WALL B

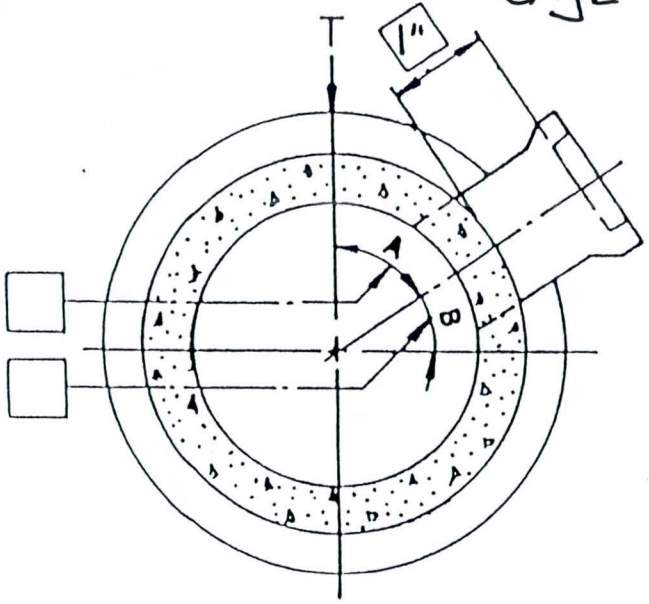

CROSS SECTION

FROM SPIGOT END

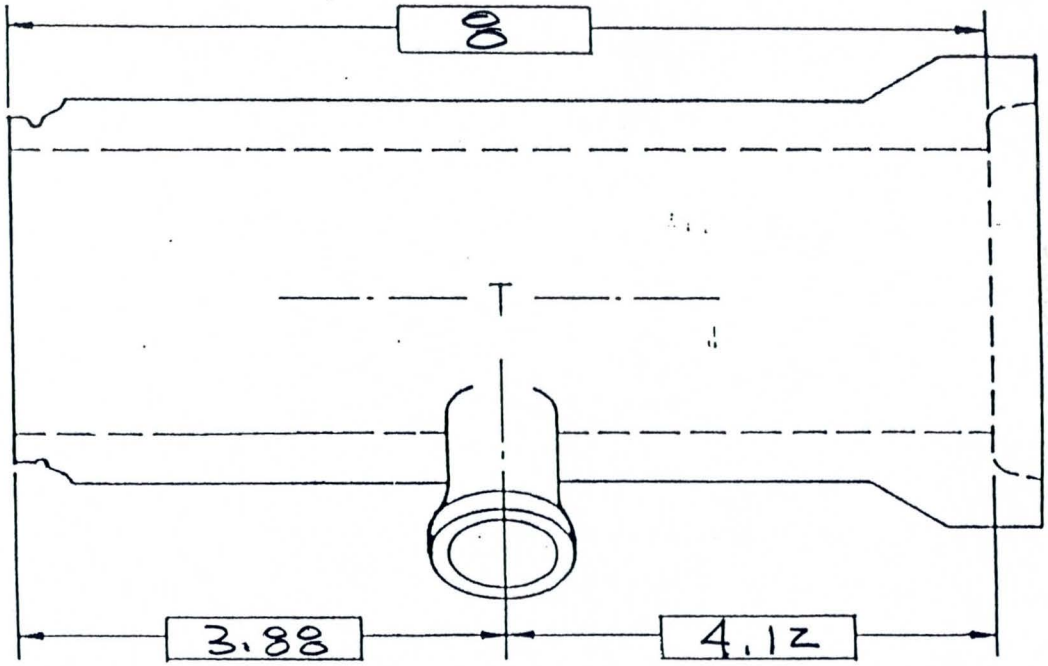

PIPE JOINT NO.	LINE LAYOUT STA.	PLAN STA.	HCC JOB NO.	SCALE	DWG. NO.
66	80 + 30	80 + 30 ✓	Cactus	NTS	4
HYDRO CONDUIT CORPORATION	FACTORY MADE TEE RGRCP		BY / CK'D.	DATE / REV.	SHEET NO ___ OF 1

CALCULATIONS

$A = R\ (\tan^{-1} \frac{H}{V})$ H = N/A

$B = R\ (\tan^{-1} \frac{V}{H})$ V =

R =

MAINLINE

I.D. 120" CLASS 12' Cu

O.D. 140" WALL A

LATERAL

I.D. 15" CLASS 2000-D

O.D. 19½" WALL B

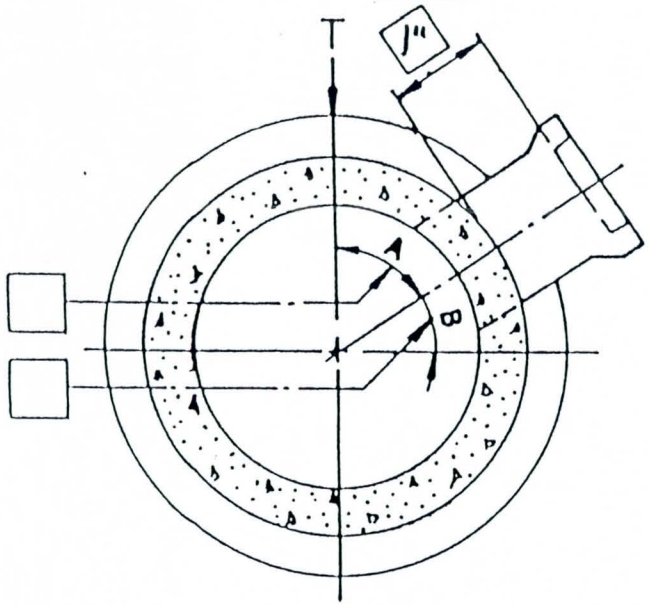

CROSS SECTION

FROM SPIGOT END

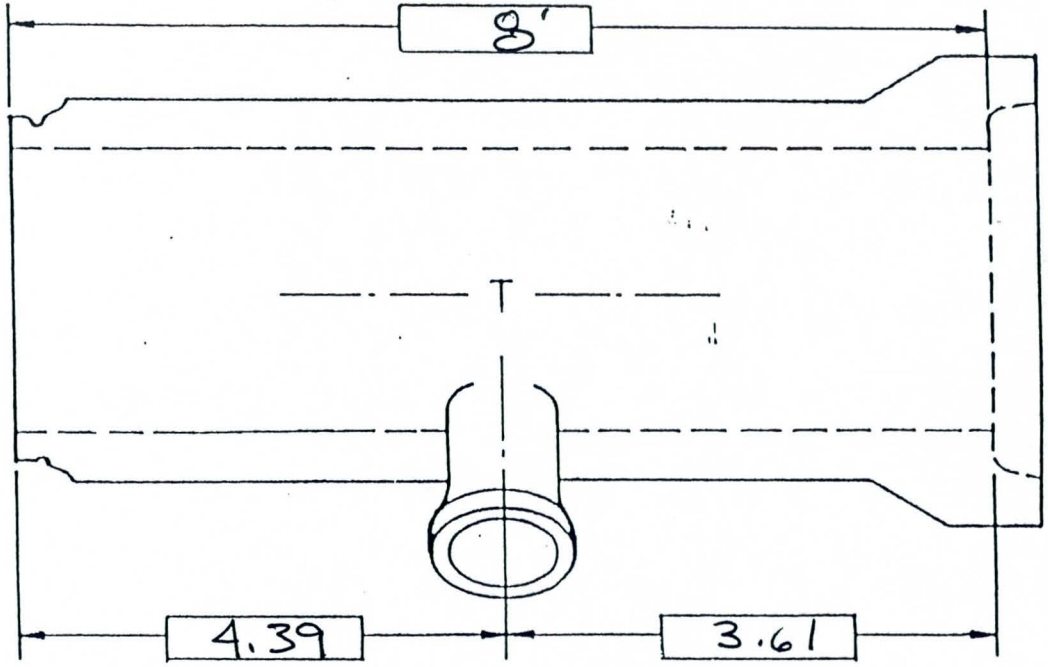

PIPE JOINT NO.	LINE LAYOUT STA.	PLAN STA.	HCC JOB NO.	SCALE	DWG. NO.
73	80+87	80+87	Cactus	NTS	4A
HYDRO CONDUIT CORPORATION	FACTORY MADE TEE RGRCP	BY	DATE	SHEET NO	
		CK'D.	REV.	___ OF 1	

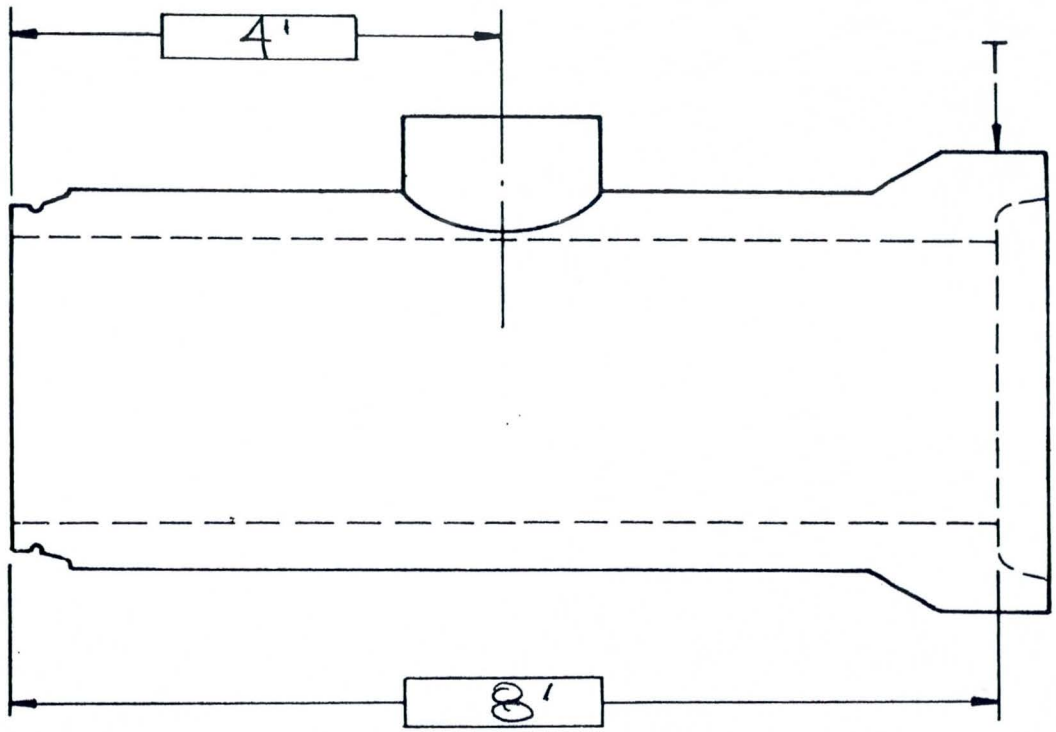

RISER		MAINLINE	
I.D.	48"	I.D. 120"	CLASS 12' Cover
TYPE	Az Precast	O.D. 140"	WALL A

PIPE JOINT NO.	LINE LAYOUT STA.	PLAN STA.	HCC JOB NO.	SCALE	DWG. NO.
74	80+94 68	80+98	Cactus	NTS	5

HYDRO CONDUIT CORPORATION	MANHOLE TEE - RGRCP	BY	DATE	SHEET NO
		CK'D.	REV.	___ OF ___

HCC-8 11-76

CALCULATIONS

$A = R\ (\tan^{-1} \frac{H}{V})$ H =

$B = R\ (\tan^{-1} \frac{V}{H})$ V =

R =

N/A

Round Cage

MAINLINE

I.D. 120" CLASS 12' Cw

O.D. 140 WALL A

LATERAL

I.D. 15" CLASS 2000-D

O.D. 19½ WALL B

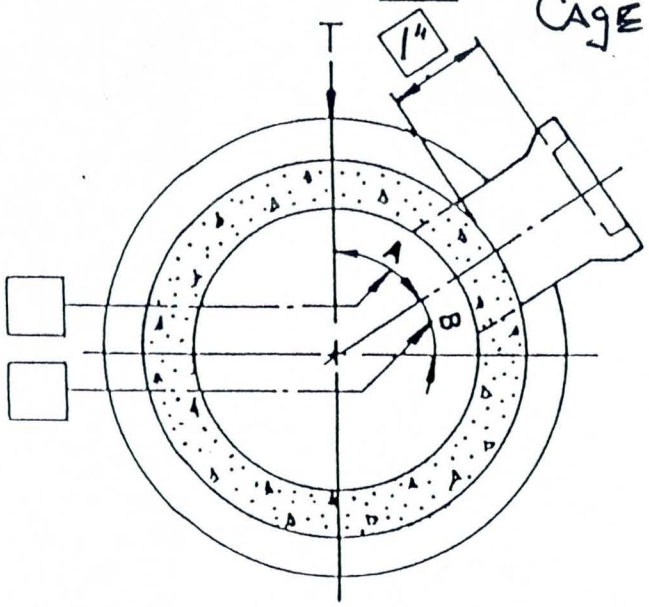

CROSS SECTION

FROM SPIGOT END

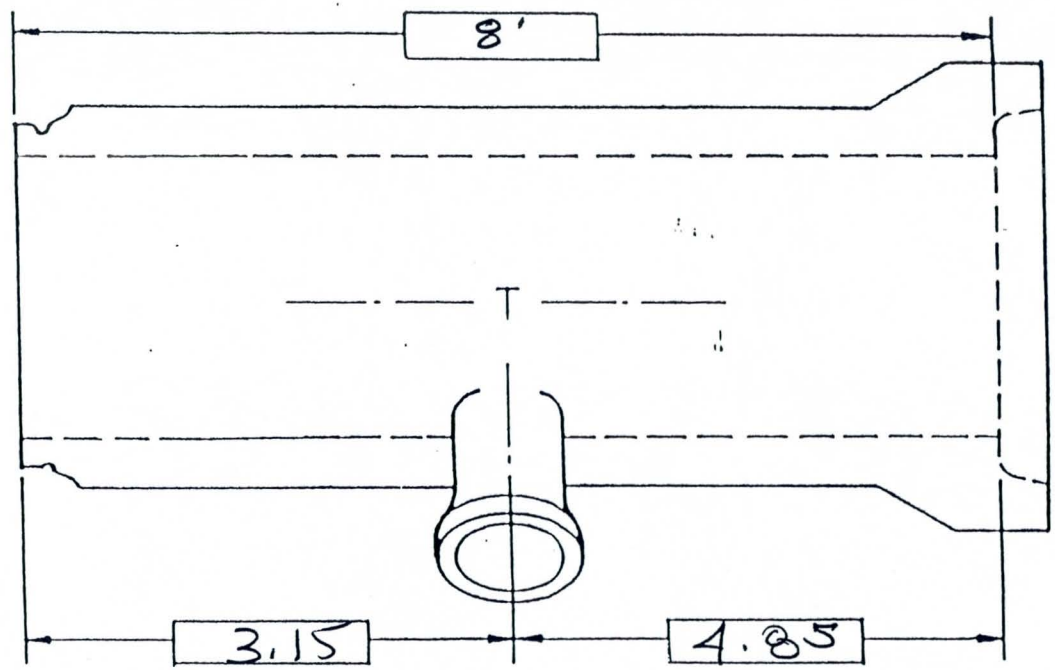

PIPE JOINT NO.	LINE LAYOUT STA.	PLAN STA.	HCC JOB NO.	SCALE	DWG. NO.
106	83+52	83+52	Cactus	NTS	6

HYDRO CONDUIT CORPORATION	FACTORY MADE TEE RGRCP	BY	DATE	SHEET NO
		CK'D.	REV.	___ OF 1

CALCULATIONS	LEFT	Right
$A = R\ (\tan^{-1} \frac{H}{V})$	H = 14.5	20
$B = R\ (\tan^{-1} \frac{V}{H})$	V = 3	1.92
	R = 70	70

MAINLINE	LATERAL LEFT	Right
I.D. 120" CLASS 12' Coo	I.D. 24" CLASS 2000-D	I.D 15" 2000-D
O.D. 140" WALL A	O.D. 30" WALL B.	O.D. 19½ B-Wa

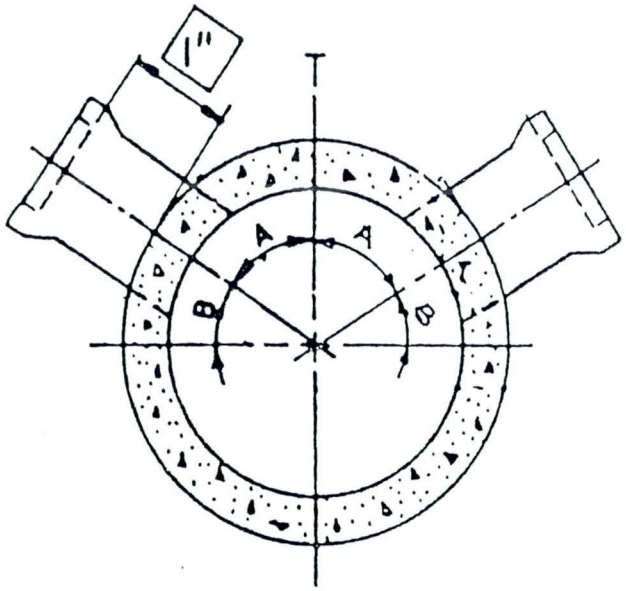

CROSS SECTION

FROM SPIGOT END

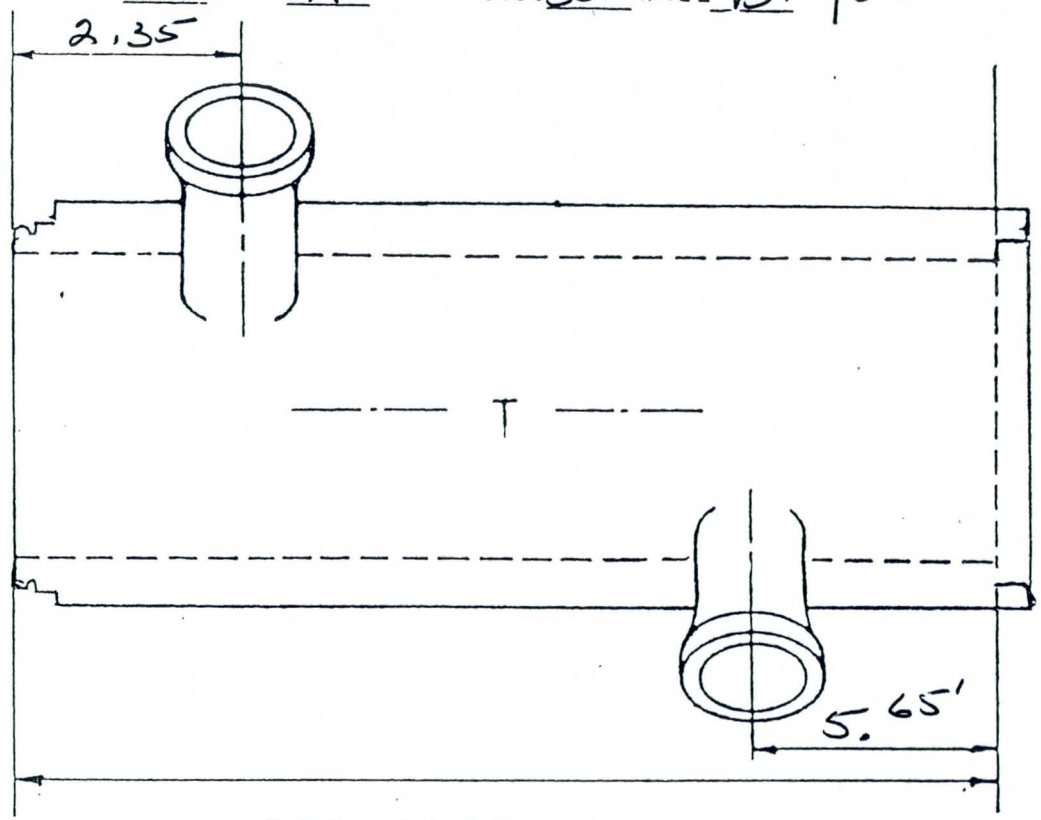

TOP VIEW

Outside	Outside
LEFT "A" = 95.67"	Right "A" = 103.25"
LEFT "B" = 14.28	LEFT "B" = 6.65"

PIPE JOINT NO.	LINE LAYOUT STA	PLAN STA.	HCC JOB NO.	SCALE	DWG. NO.
146	86+74	86+74	Cactus	NTS	7

HYDRO CONDUIT CORPORATION

FACTORY MADE TEE
T&G RCP — LEFT

BY	DATE	SHEET NO
CK'D.	REV.	___ OF ___

CALCULATIONS

$A = R\ (\tan^{-1} \frac{H}{V})$ H =

$B = R\ (\tan^{-1} \frac{V}{H})$ V =

R =

N/A

MAINLINE

I.D. 120" CLASS 12' Con

O.D. 140" WALL A

LATERAL

I.D. 36" CLASS 2000-D

O.D. 44" WALL B

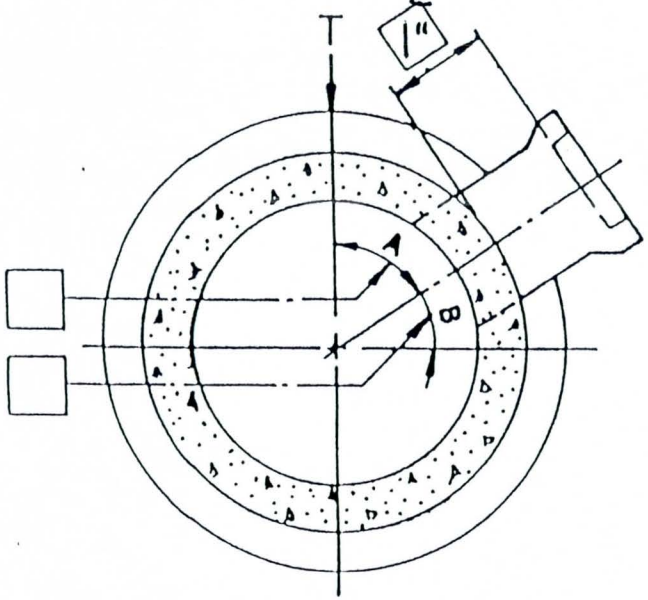

CROSS SECTION

FROM SPIGOT END

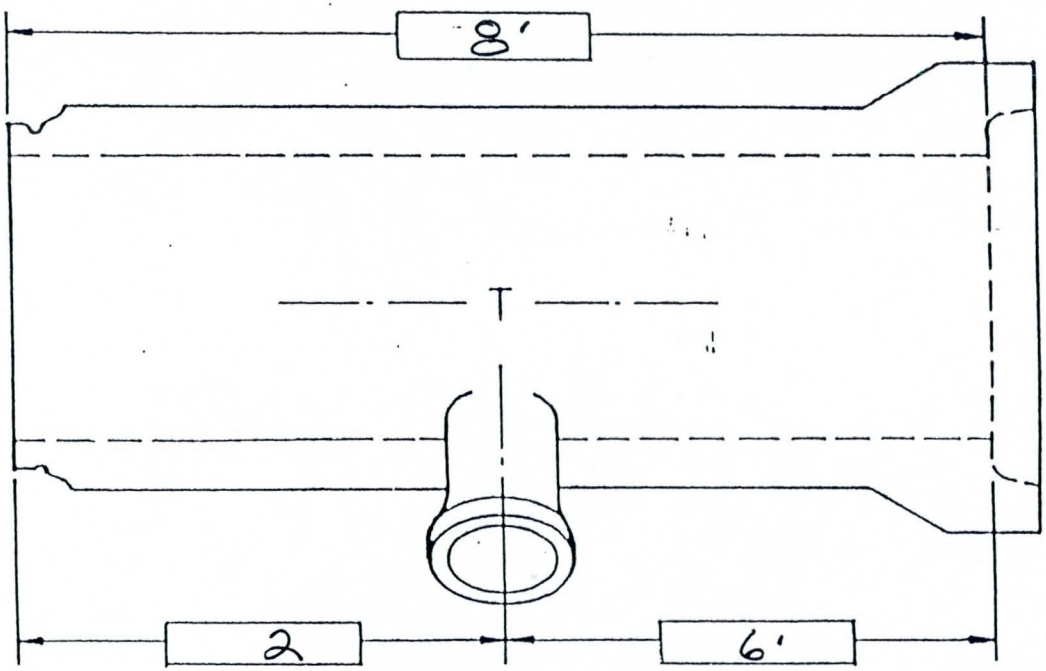

PIPE JOINT NO.	LINE LAYOUT STA.	PLAN STA.	HCC JOB NO.	SCALE	DWG. NO.
153	~~89+30.14~~ 87+30.14	~~89+29~~ 87+29?	N/A	NTS	8
HYDRO CONDUIT CORPORATION	FACTORY MADE TEE RGRCP	BY / CK'D.	DATE / REV.	SHEET NO ___ OF 1	

CALCULATIONS

$A = R\ (\tan^{-1} \frac{H}{V})$ H = N/A

$B = R\ (\tan^{-1} \frac{V}{H})$ V =

R =

Round Cage

MAINLINE

I.D. 120" CLASS 12' Cu

O.D. 140" WALL A

LATERAL

I.D. 15" CLASS 2000-D

O.D. 19½ WALL B

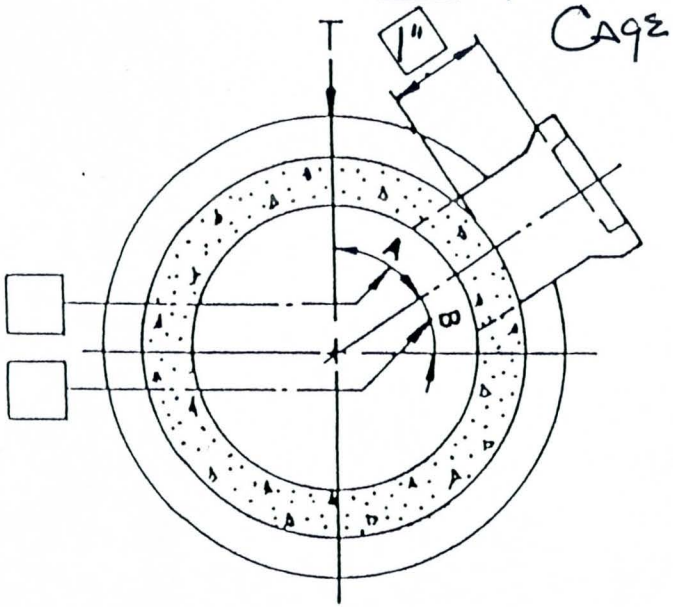

CROSS SECTION

FROM SPIGOT END

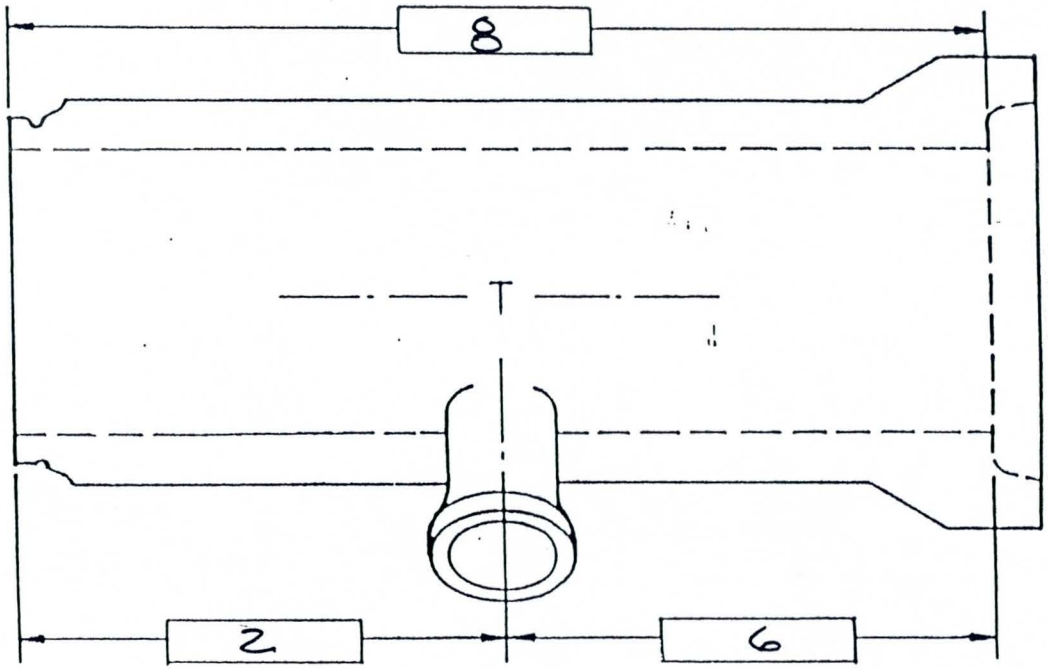

PIPE JOINT NO.	LINE LAYOUT STA.	PLAN STA.	HCC JOB NO.	SCALE	DWG. NO.
159	87+78 SL	87+78	Cactus	NTS	9
HYDRO CONDUIT CORPORATION	FACTORY MADE TEE RGRCP	BY		DATE	SHEET NO
		CK'D.		REV.	___ OF 1

CALCULATIONS

$A = R\ (\tan^{-1} \frac{H}{V})$ H = N/A

$B = R\ (\tan^{-1} \frac{V}{H})$ V =

R =

Round Cage

MAINLINE

I.D. 120 CLASS 12' Cov

O.D. 140 WALL A

LATERAL

I.D. 15" CLASS 2000-D

O.D. 19½ WALL B

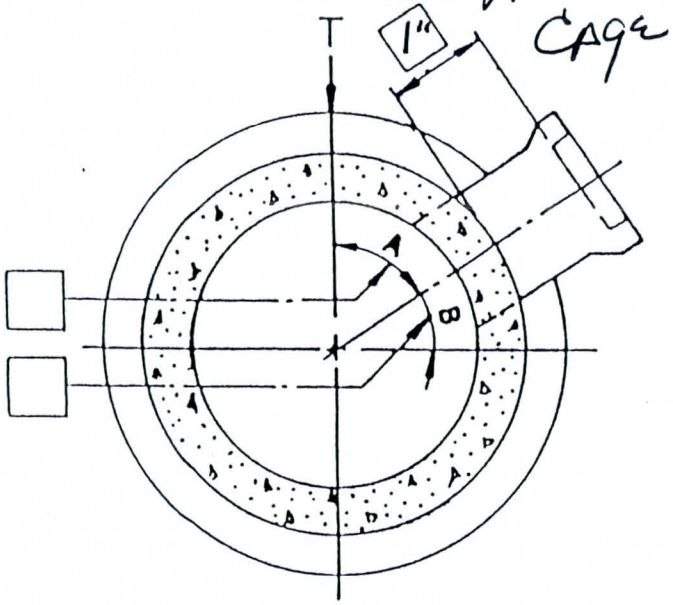

CROSS SECTION

FROM SPIGOT END

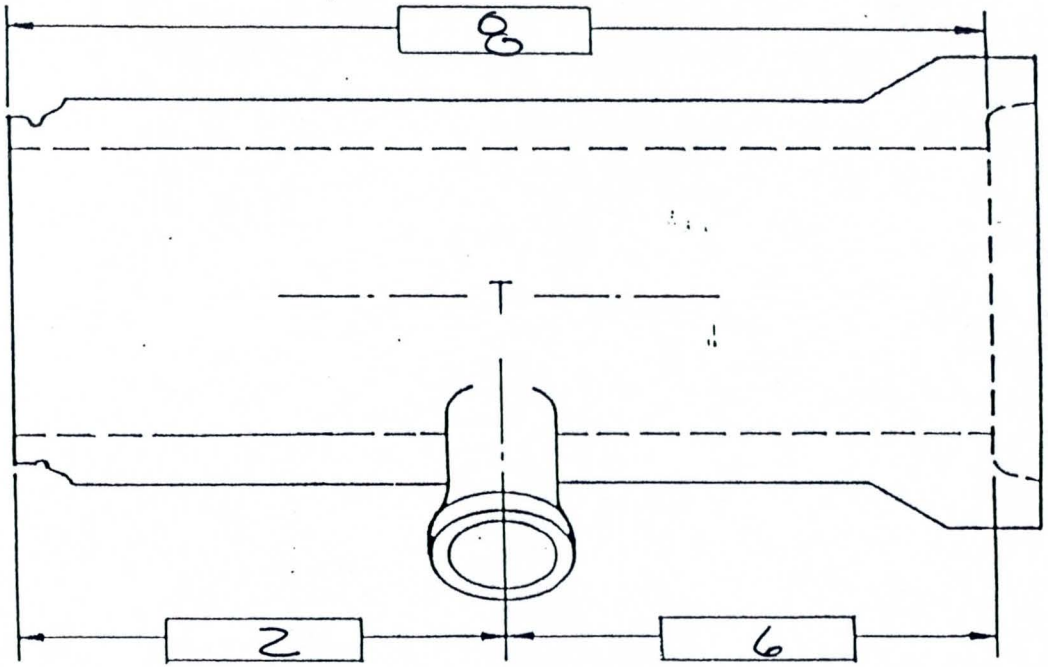

PIPE JOINT NO.	LINE LAYOUT STA.	PLAN STA.	HCC JOB NO.	SCALE	DWG. NO.
16+	88 + 18 91	88+18	N/A	NTS	10

HYDRO CONDUIT CORPORATION	FACTORY MADE TEE RGRCP	BY	DATE	SHEET NO
		CK'D.	REV.	___ OF 1

CALCULATIONS

$A = R\ (\tan^{-1} \frac{H}{V})$ H =

$B = R\ (\tan^{-1} \frac{V}{H})$ V =

R =

N/A

MAINLINE

I.D. 120" CLASS 12' Cou

O.D. 140" WALL A

LATERAL

I.D. 15" CLASS 2000-D

O.D. 19½ WALL B

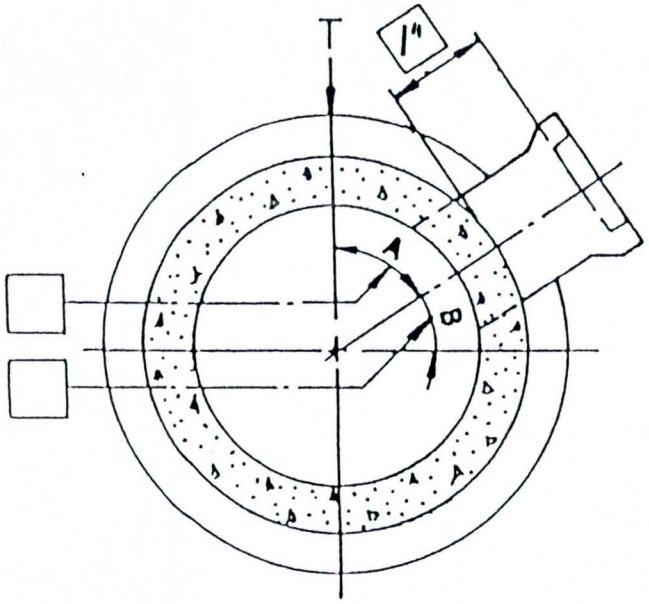

CROSS SECTION

FROM SPIGOT END

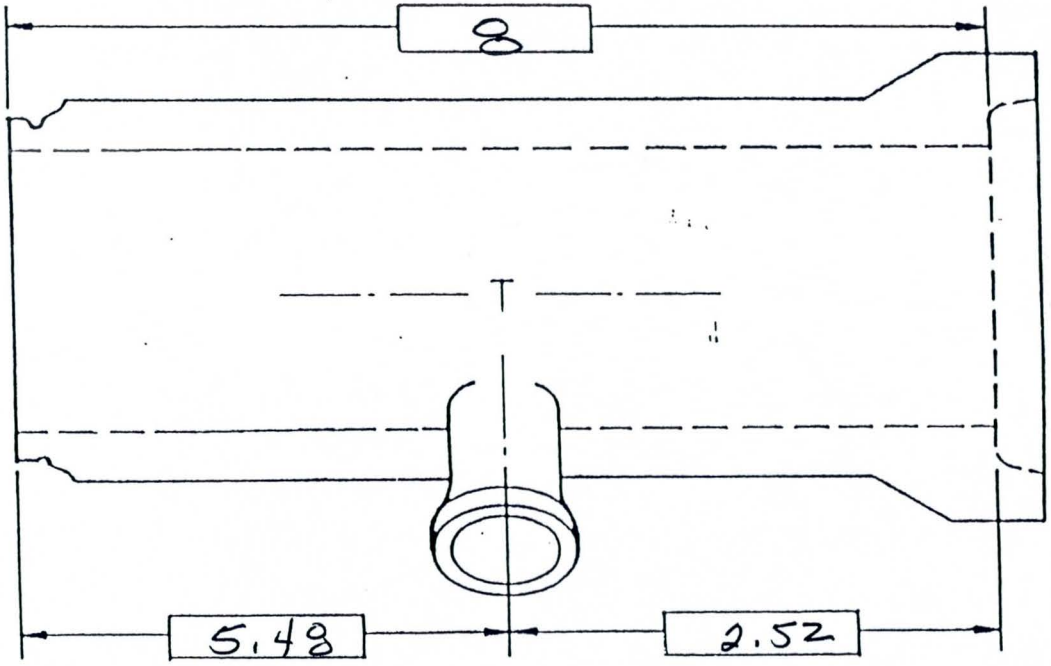

PIPE JOINT NO.	LINE LAYOUT STA.	PLAN STA.	HCC JOB NO.	SCALE	DWG. NO.
186	90+00	90+00	Cactus	NTS	11
HYDRO CONDUIT CORPORATION	FACTORY MADE TEE RGRCP		BY / CK'D.	DATE / REV.	SHEET NO ___ OF 1

CALCULATIONS

	Left	Right
$A = R\ (\tan^{-1} \frac{H}{V})$	H = 17	34
$B = R\ (\tan^{-1} \frac{V}{H})$	V = 5 37	4 39
	R = 70"	70

MAINLINE

I.D. 120 CLASS 12' Cow

O.D. 140 WALL A

LATERAL - Both Sides

I.D. 15" CLASS 200

O.D. 19½ WALL B

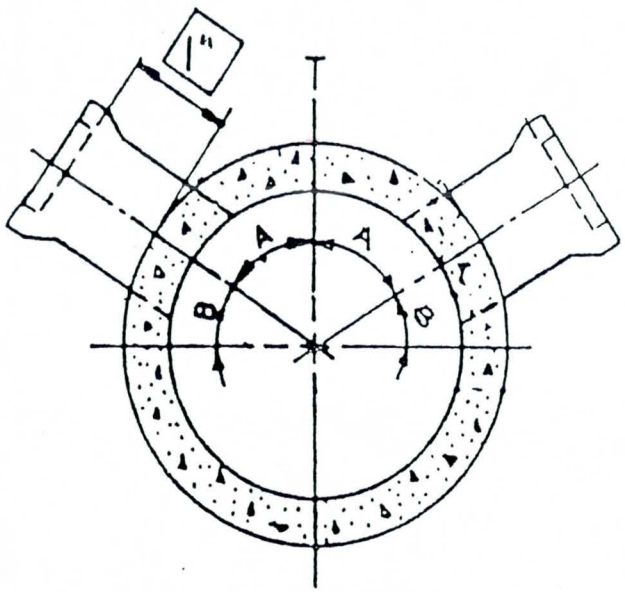

CROSS SECTION

FROM SPIGOT END

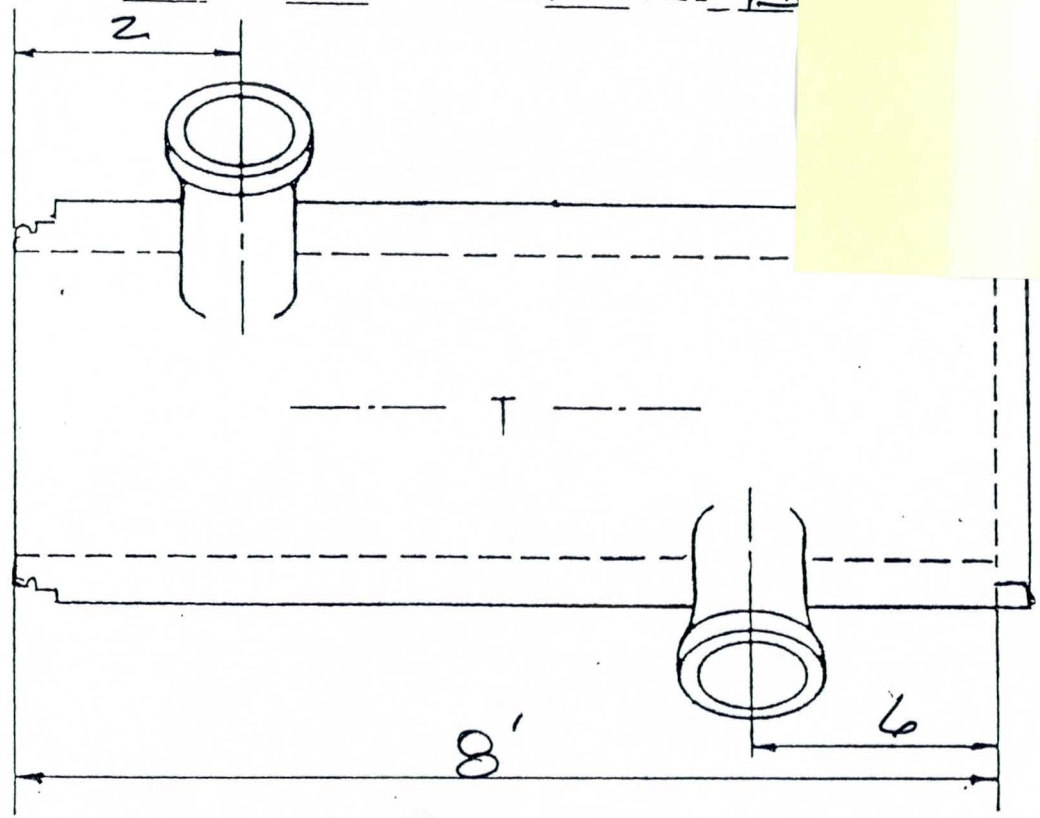

TOP VIEW

Outside	Outside
Left "A" = 86 68	Right "A" = 100 96"
Left "B" = 23 22	Right "B" = 9"

Both sides are 15" Lateral

PIPE JOINT NO.	LINE LAYOUT STA	PLAN STA.	HCC JOB NO.	SCALE	DWG. NO.
248	94 + 96 79	94+95	Cactus	NTS	12

HYDRO CONDUIT CORPORATION	FACTORY MADE TEE T&G RCP — LEFT	BY	DATE	SHEET NO
		CK'D.	REV.	___ OF ___

CALCULATIONS

	Left	Right
$A = R\,(\tan^{-1} \frac{H}{V})$	H = 17	34
$B = R\,(\tan^{-1} \frac{V}{H})$	V = 5 37	4 39
	R = 70"	70

MAINLINE

I.D. 120 CLASS 12' Cov

O.D. 140 WALL A

LATERAL - Both Sides

I.D. 15" CLASS 2000D

O.D. 19½ WALL B

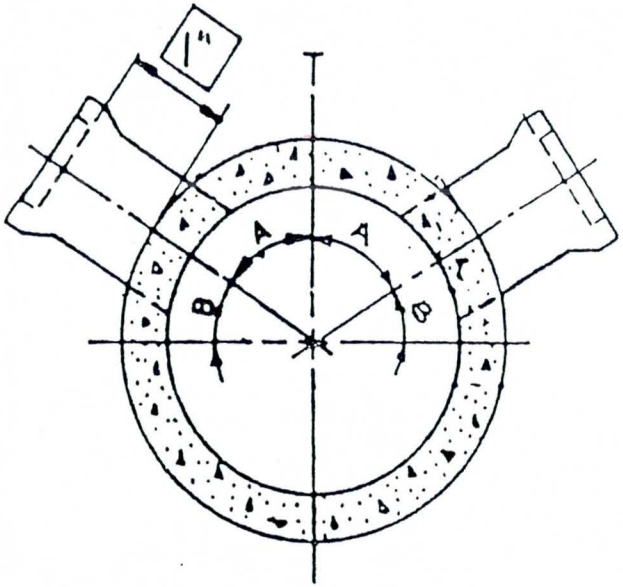

CROSS SECTION

FROM SPIGOT END

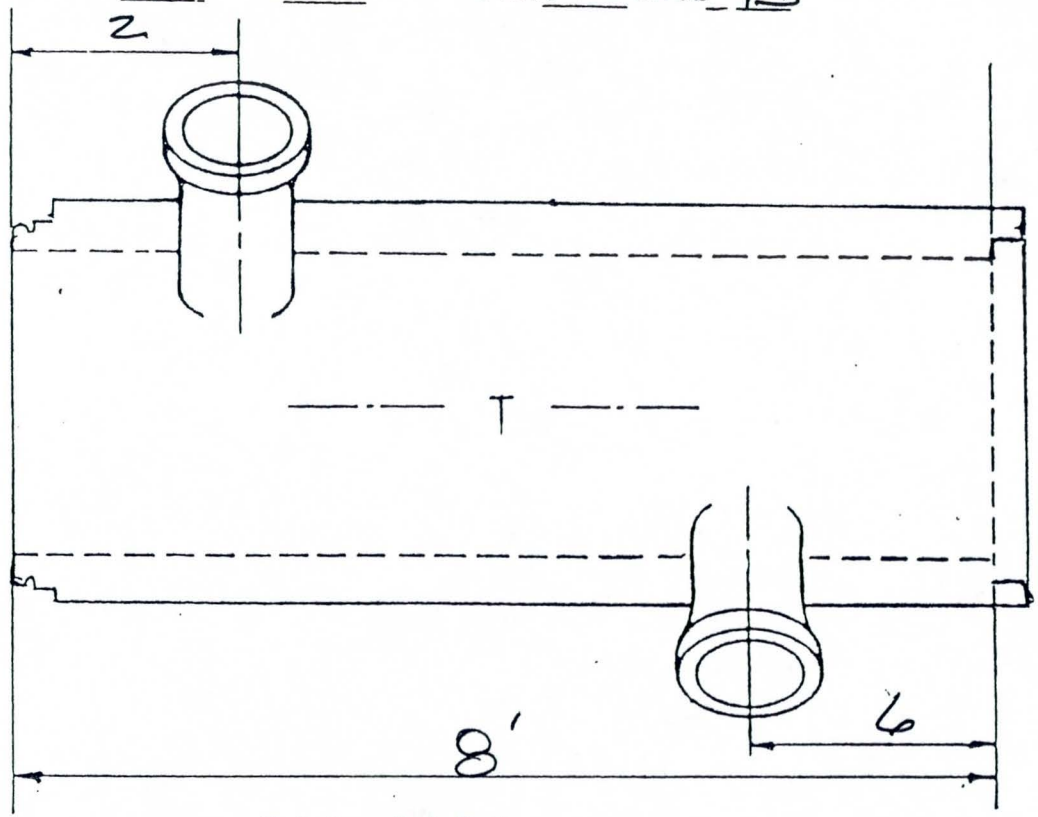

TOP VIEW

Outside	Outside
Left "A" = 86 68	Right "A" = 100 96"
Left "B" = 23 22	Right "B" = 9"

Both sides ARE 15" LATERAL

PIPE JOINT NO.	LINE LAYOUT STA	PLAN STA.	HCC JOB NO.	SCALE	DWG. NO.
248	94 + 96 79	94+95	Cactus	NTS	12

HYDRO CONDUIT CORPORATION	FACTORY MADE TEE T&G RCP — LEFT	BY	DATE	SHEET NO
		CK'D.	REV.	___ OF ___

CALCULATIONS

$A = R\ (\tan^{-1} \frac{H}{V})$ H = N/A

$B = R\ (\tan^{-1} \frac{V}{H})$ V = Round

R = Cage

MAINLINE

I.D. 120" CLASS 12' CWU

O.D. 140" WALL A

LATERAL

I.D. 15" CLASS 2000-D

O.D. 19½" WALL B

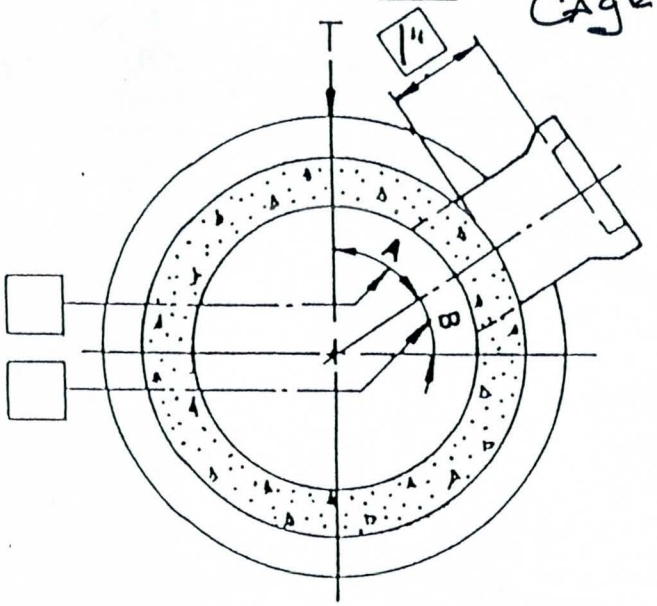

CROSS SECTION

FROM SPIGOT END

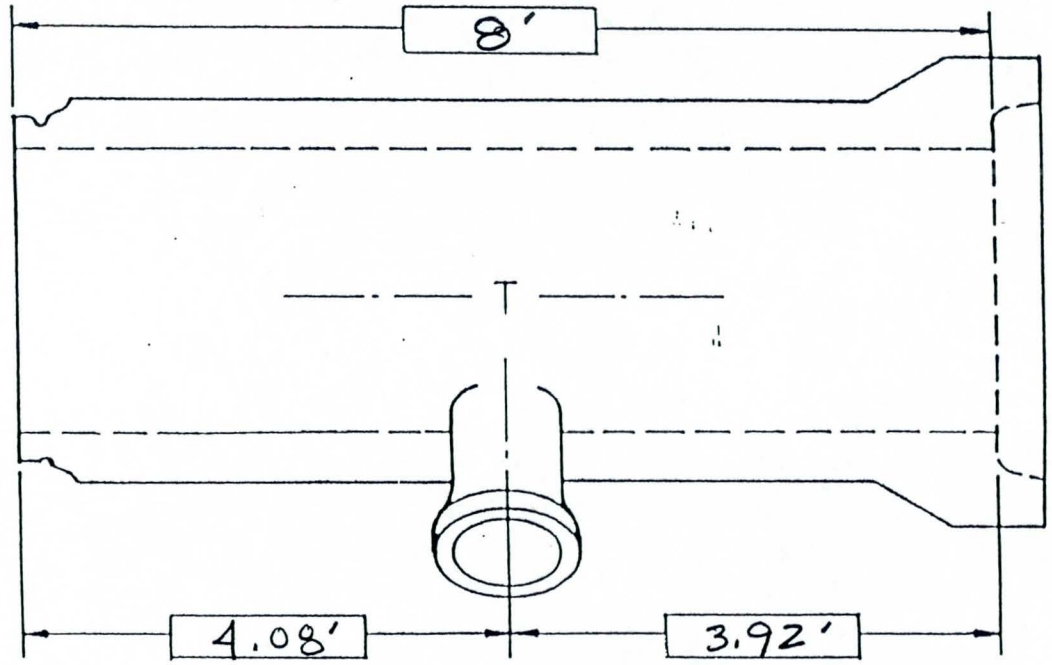

PIPE JOINT NO.	LINE LAYOUT STA.	PLAN STA.	HCC JOB NO.	SCALE	DWG. NO.
307	99 + 75	99+75	Cactus	NTS	13

HYDRO CONDUIT CORPORATION	FACTORY MADE TEE RGRCP	BY	DATE	SHEET NO
		CK'D.	REV.	___ OF 1

CALCULATIONS

$A = R\ (\tan^{-1} \frac{H}{V})$ H = N/A

$B = R\ (\tan^{-1} \frac{V}{H})$ V =

R =

MAINLINE

I.D. 120" CLASS 12' Cov

O.D. 140" WALL A

LATERAL

I.D. 66" CLASS 2000-D

O.D. 80" WALL C

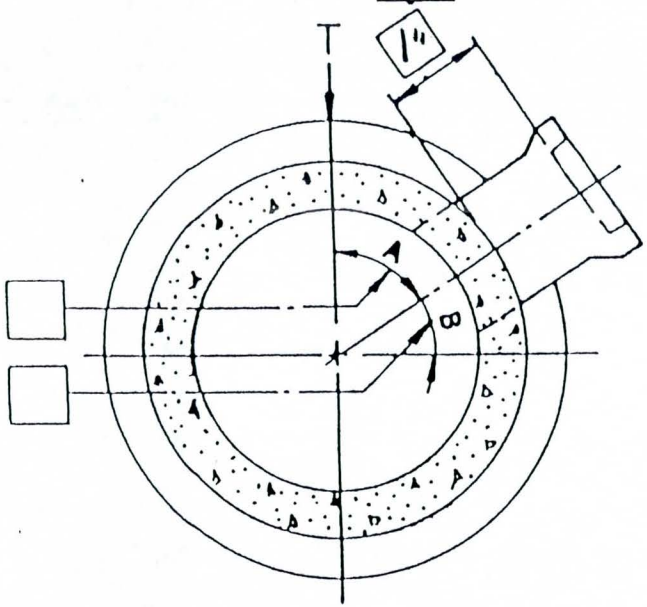

CROSS SECTION

FROM SPIGOT END

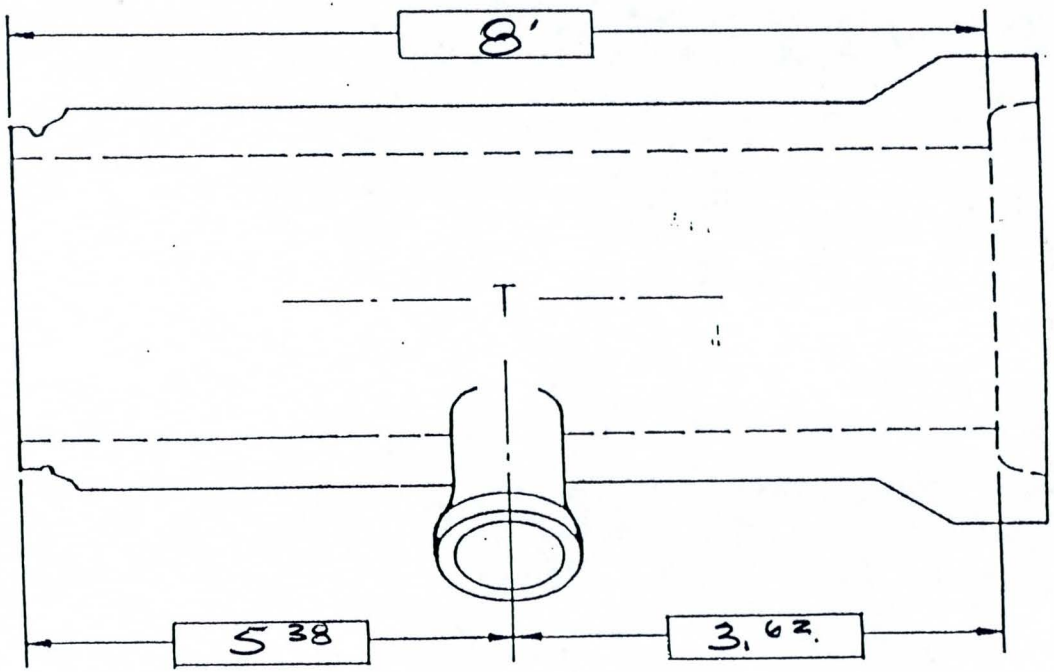

PIPE JOINT NO.	LINE LAYOUT STA.	PLAN STA.	HCC JOB NO.	SCALE	DWG. NO.
317	100 + 57	100 + 57	Cactus	NTS	14

HYDRO CONDUIT CORPORATION	FACTORY MADE TEE RGRCP	BY	DATE	SHEET NO
		CK'D.	REV.	___ OF 1

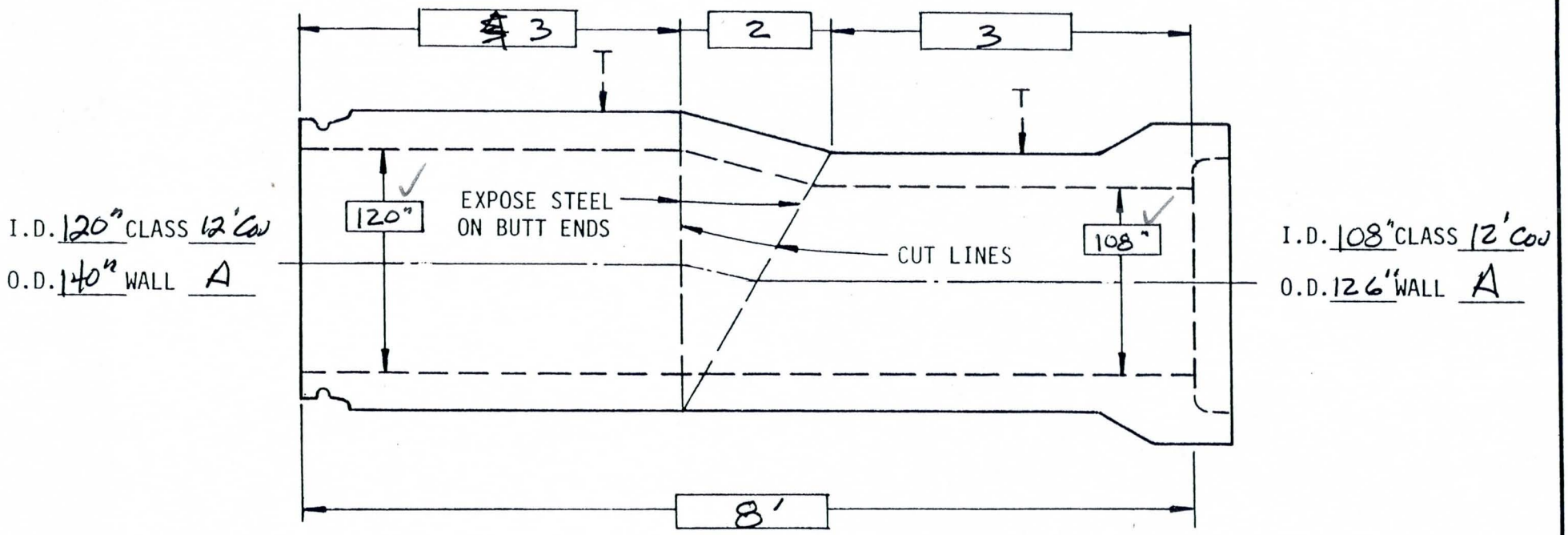

REINFORCE TRANSITION WITH
STEEL AREA OF [ ] $IN^2/FT.$
WELD TO EXPOSED STEEL
SAME AS PIPE

PIPE JOINT NO.	LINE LAYOUT STA.	PLAN STA.	HCC JOB NO.	SCALE	DWG. NO.
318			CACTUS	NTS	15

HYDRO CONDUIT CORPORATION	FACTORY MADE REDUCER - RGRCP	BY	DATE	SHEET NO
		CK'D.	REV.	___ OF ___

HCC-19 11-76

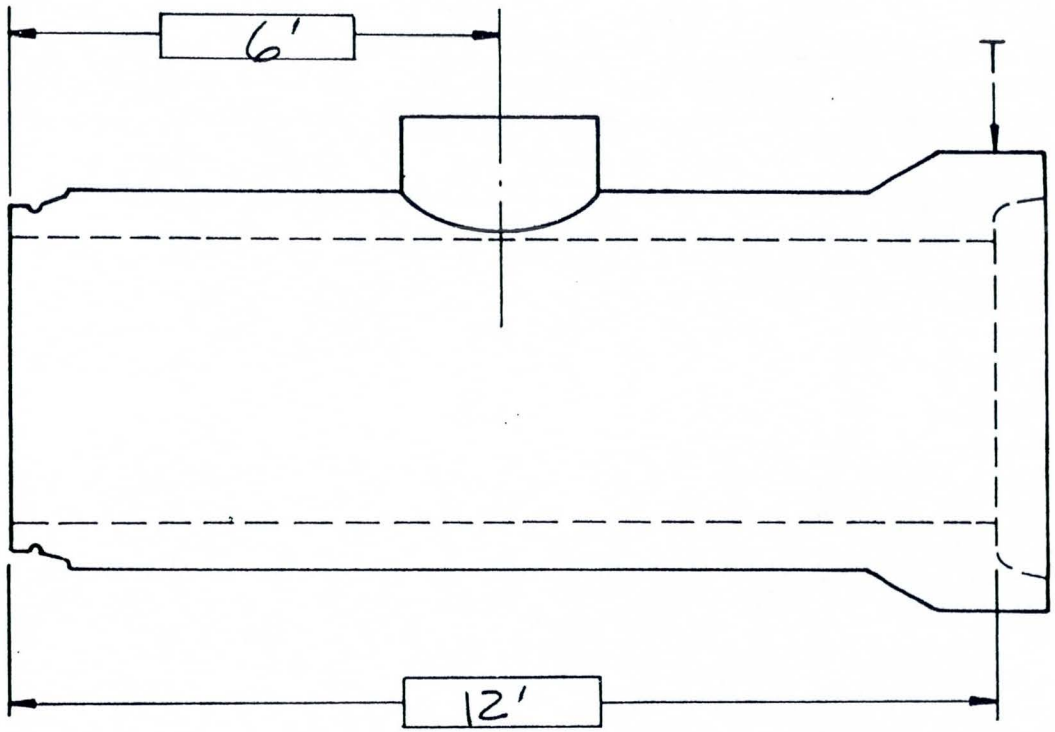

RISER		MAINLINE	
I.D.	48"	I.D. 108"	CLASS 12' CWC
TYPE	Az Precast	O.D. 126"	WALL A

PIPE JOINT NO.	LINE LAYOUT STA.	PLAN STA.	HCC JOB NO.	SCALE	DWG. NO.
319		100+57	Cactus	NTS	16

HYDRO CONDUIT CORPORATION	MANHOLE TEE – RGRCP	BY	DATE	SHEET NO
		CK'D.	REV.	___ OF ___

HCC-8 11-76

CALCULATIONS	LEFT	Right
$A = R\,(\tan^{-1} \frac{H}{V})$	H = 15"	19
$B = R\,(\tan^{-1} \frac{V}{H})$	V = 6^{21}	6^{98}
	R = 63	63

MAINLINE

I.D. 108" CLASS 12' Cov

O.D. 126" WALL A

LATERAL Both Sides

I.D. 15" CLASS 2000-D

O.D. 19½ WALL A

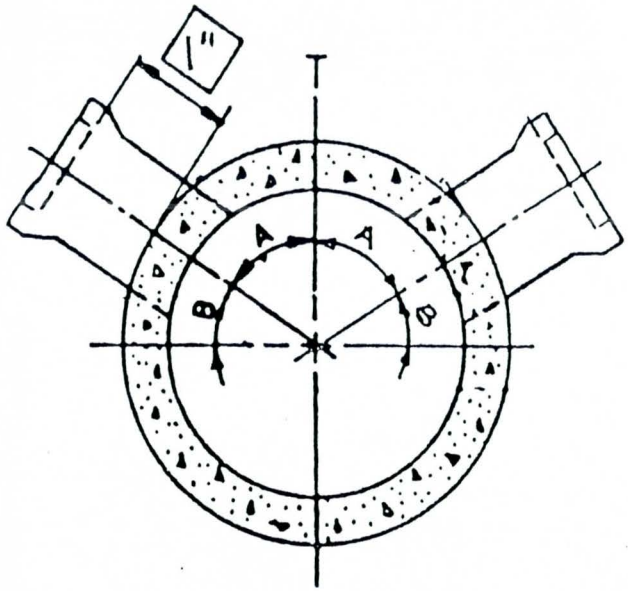

CROSS SECTION

FROM SPIGOT END

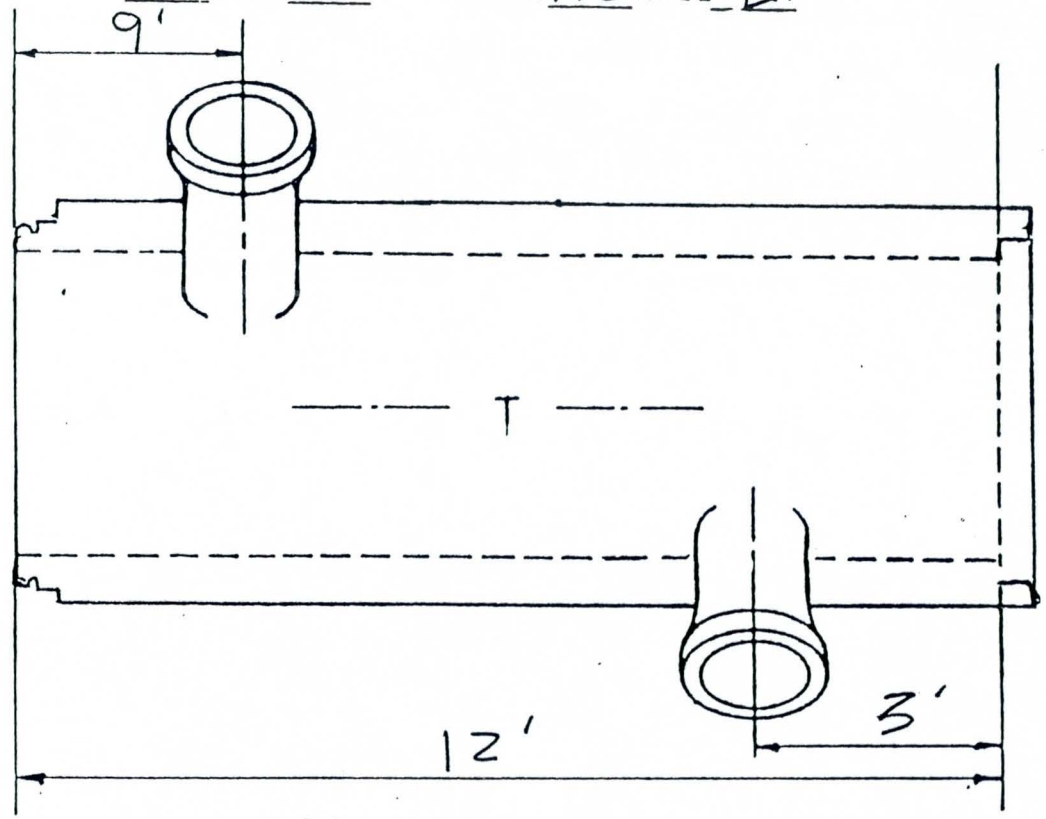

TOP VIEW

LEFT "A" = 74^{23} Right "A" = 76^{78}

LEFT "B" = 24^{68} Right "B" = 22^{13}

PIPE JOINT NO.	LINE LAYOUT STA	PLAN STA.	HCC JOB NO.	SCALE	DWG. NO.
324	101+33	101+33	101+33	NTS	17

HYDRO CONDUIT CORPORATION	FACTORY MADE TEE T&G RCP — LEFT	BY	DATE	SHEET NO
		CK'D.	REV.	___ OF ___

CALCULATIONS		LEFT	RIGHT
$A = R\,(\tan^{-1}\frac{H}{V})$	H =	15	19
$B = R\,(\tan^{-1}\frac{V}{H})$	V =	6^{34}	8^{34}
	R =	63	63

MAINLINE	LATERAL
I.D. 108" CLASS 12' COU	I.D. 15" CLASS 2000-D
O.D. 126' WALL A	O.D. 19½ WALL B.

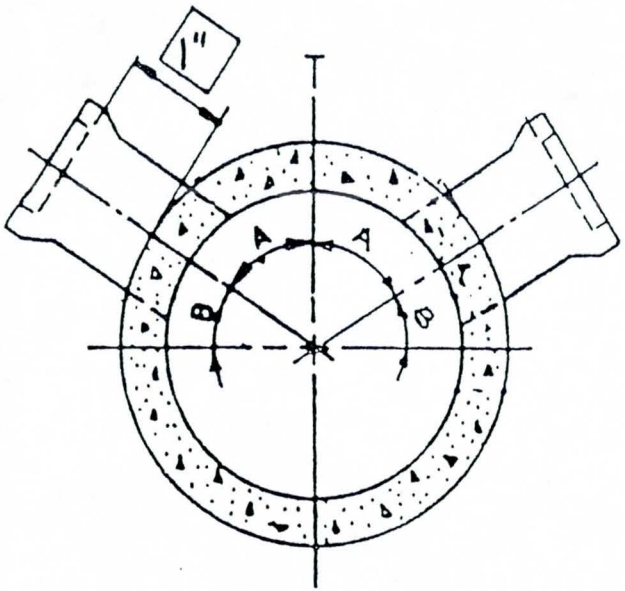

CROSS SECTION

FROM SPIGOT END

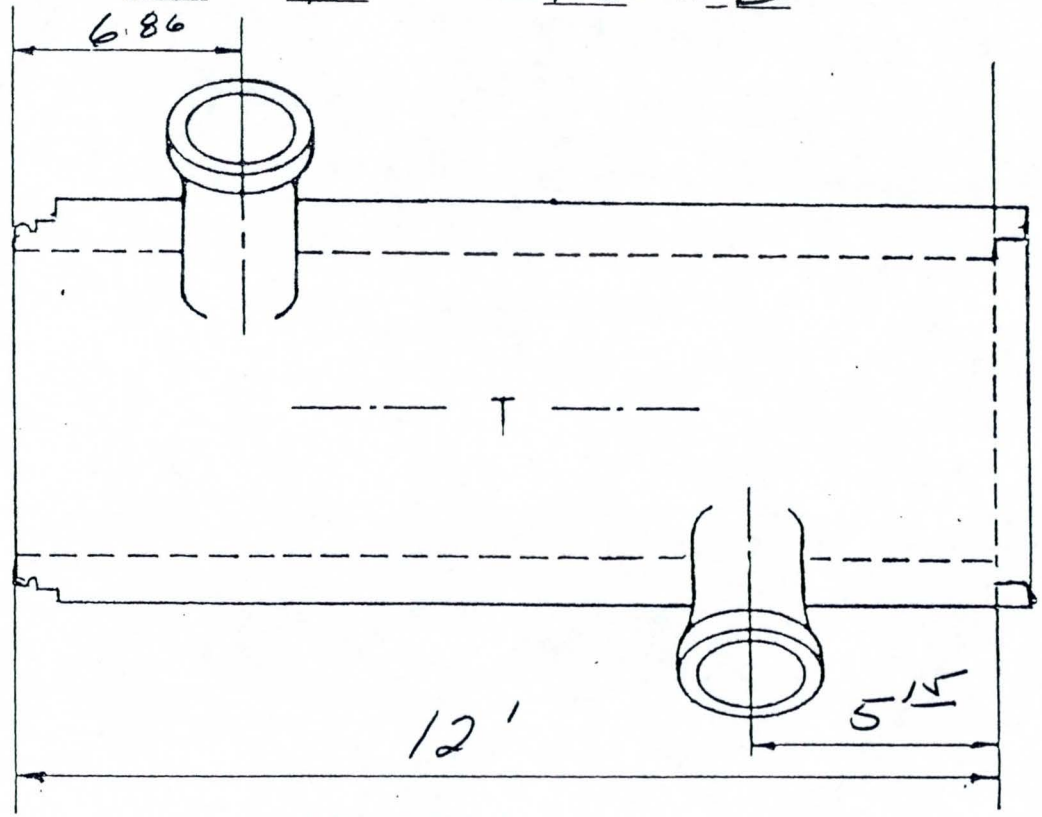

TOP VIEW

LEFT "A" = 73^{69}" Right "A" = 72^{90}"

LEFT "B" = 25^{22}" Right "B" = 26^{01}"

PIPE JOINT NO.	LINE LAYOUT STA	PLAN STA.	HCC JOB NO.	SCALE	DWG. NO.
363	106+00	106+00	Cactus	NTS	18

HYDRO CONDUIT CORPORATION	FACTORY MADE TEE T&G RCP — LEFT	BY	DATE	SHEET NO
		CK'D.	REV.	___ OF ___

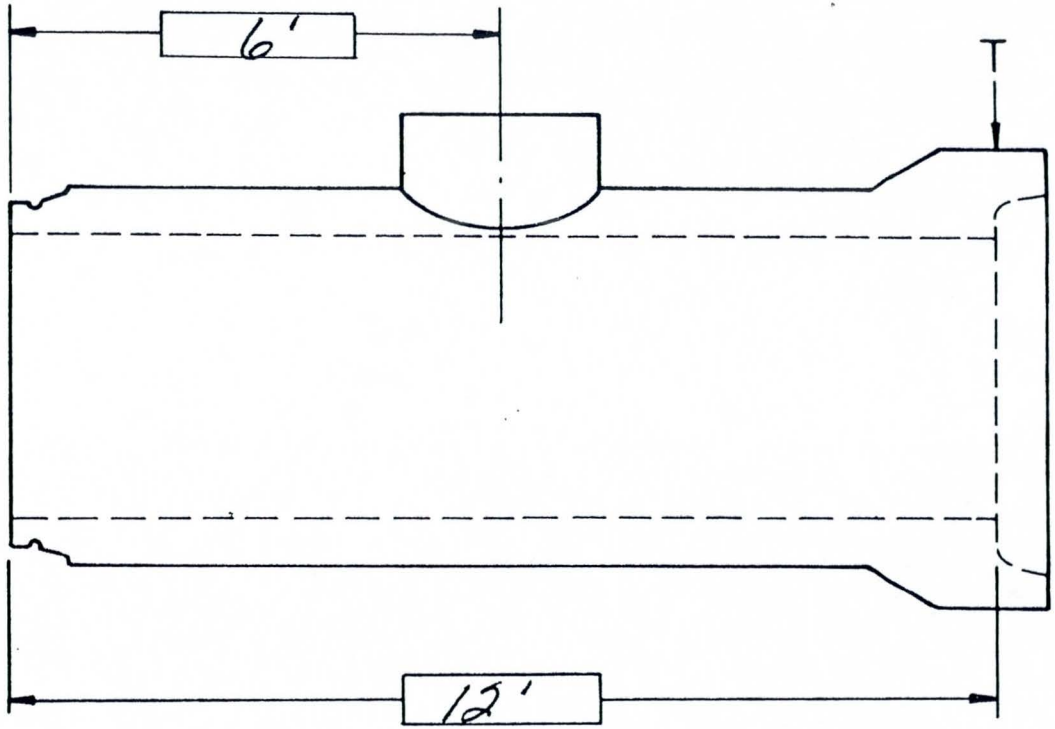

RISER		MAINLINE	
I.D.	48"	I.D.	108" CLASS 12' CW
TYPE	A2 Precast	O.D.	126" WALL A

PIPE JOINT NO.	LINE LAYOUT STA.	PLAN STA.	HCC JOB NO.	SCALE	DWG. NO.
375	107+43	107+38	Cactus	NTS	19

HYDRO CONDUIT CORPORATION	MANHOLE TEE – RGRCP	BY	DATE	SHEET NO
		CK'D.	REV.	___ OF ___

HCC-8 11-76

CALCULATIONS

	LEFT	RIGHT
$A = R\,(\tan^{-1} \frac{H}{V})$	H = 25	20
$B = R\,(\tan^{-1} \frac{V}{H})$	V = 9.31	8.38
	R = 63	63

MAINLINE

I.D. 108" CLASS 12' COJ

O.D. 126" WALL A

LATERAL

I.D. 15" CLASS 2000-D

O.D. 19½" WALL B.

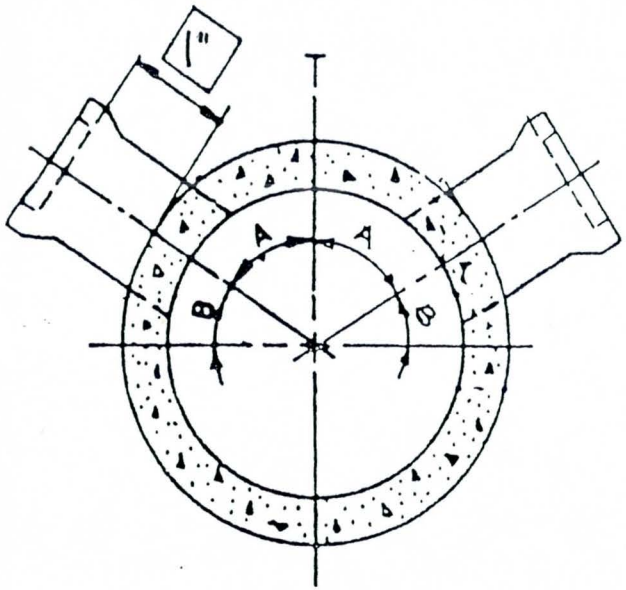

CROSS SECTION

FROM SPIGOT END

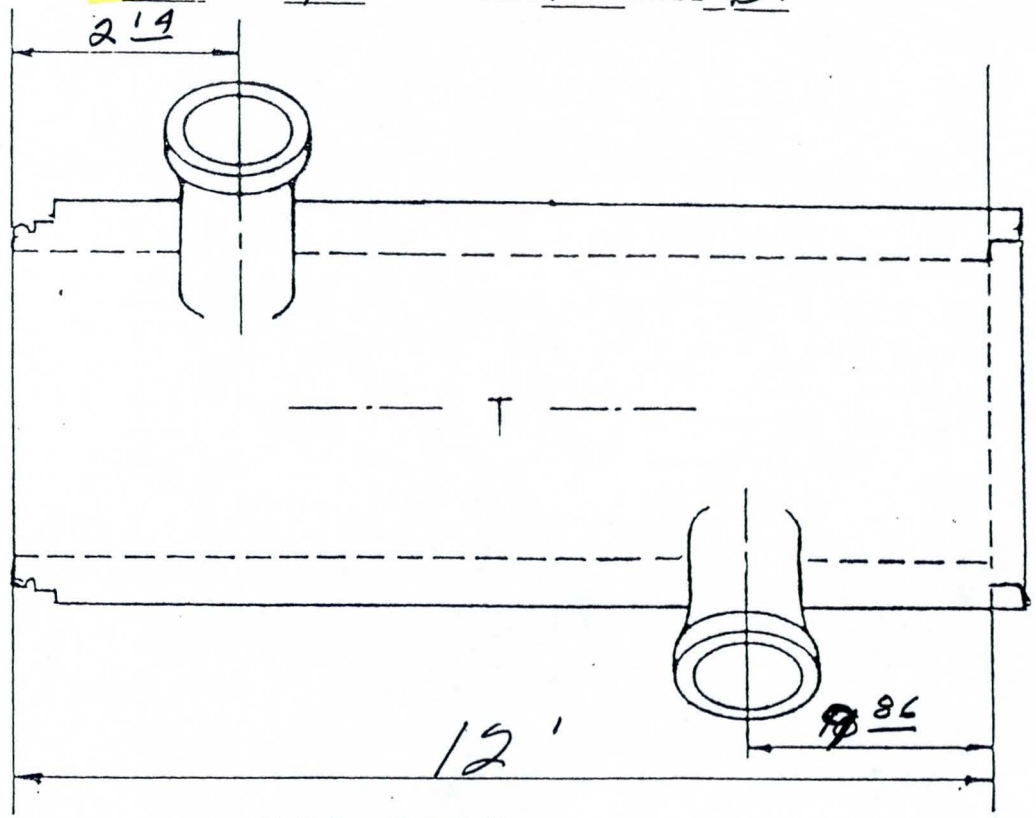

TOP VIEW

LEFT "A" = 76.56" Right "A" = 73.96

LEFT "B" = 23.41" Right "B" = 24.95

PIPE JOINT NO.	LINE LAYOUT STA	PLAN STA.	HCC JOB NO.	SCALE	DWG. NO.
421	112 +93	112 +93	Cactus	NTS	20

HYDRO CONDUIT CORPORATION	FACTORY MADE TEE T&G RCP — LEFT	BY	DATE	SHEET NO
		CK'D.	REV.	___ OF ___

CALCULATIONS

$A = R\ (\tan^{-1} \frac{H}{V})$ H = N/A

$B = R\ (\tan^{-1} \frac{V}{H})$ V =

R =

MAINLINE

I.D. 108" CLASS 12' Cou

O.D. 126" WALL A

LATERAL

I.D. 15' CLASS 2000-0

O.D. 19½' WALL B

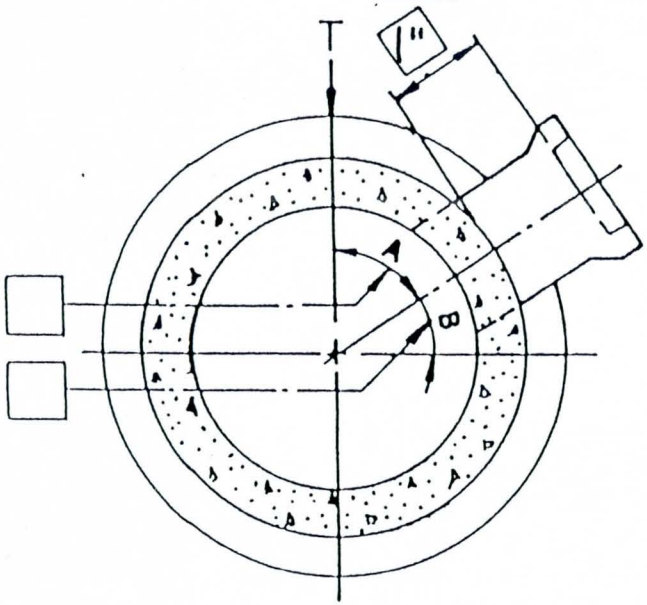

CROSS SECTION

FROM SPIGOT END

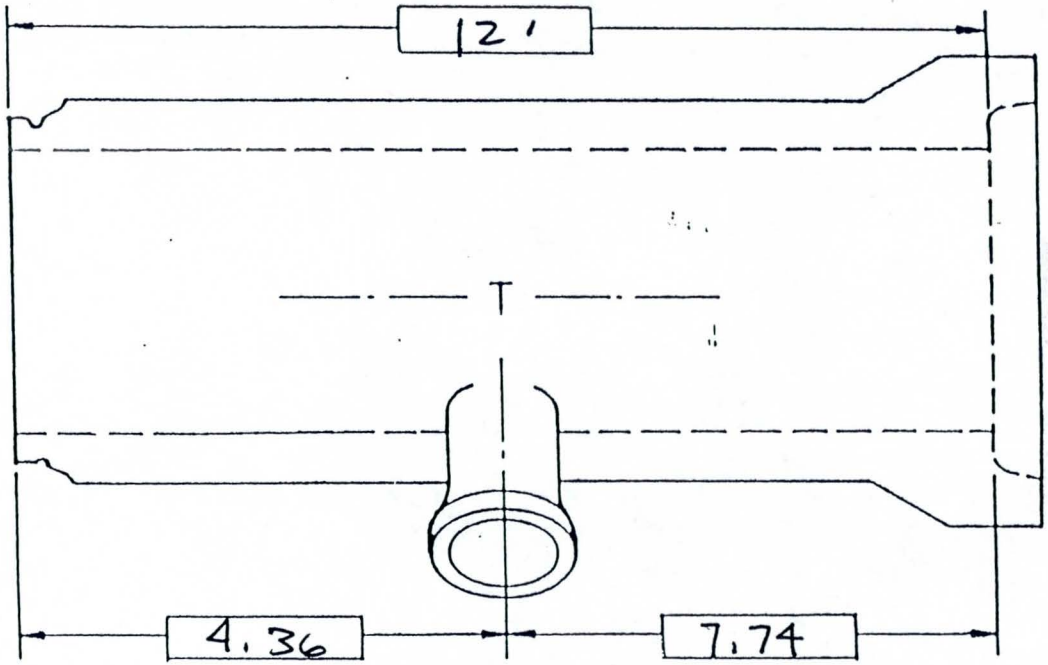

PIPE JOINT NO.	LINE LAYOUT STA.	PLAN STA.	HCC JOB NO.	SCALE	DWG. NO.
447	116+08	116+08	Cactus	NTS	21

HYDRO CONDUIT CORPORATION	FACTORY MADE TEE RGRCP	BY	DATE	SHEET NO
		CK'D.	REV.	___ OF 1

CALCULATIONS

$A = R\ (\tan^{-1} \frac{H}{V})$ H = N/A

$B = R\ (\tan^{-1} \frac{V}{H})$ V =

R =

MAINLINE

I.D. 108" CLASS 12' Cu

O.D. 126" WALL A

LATERAL

I.D. 15' CLASS 2000-0

O.D. 19½ WALL B

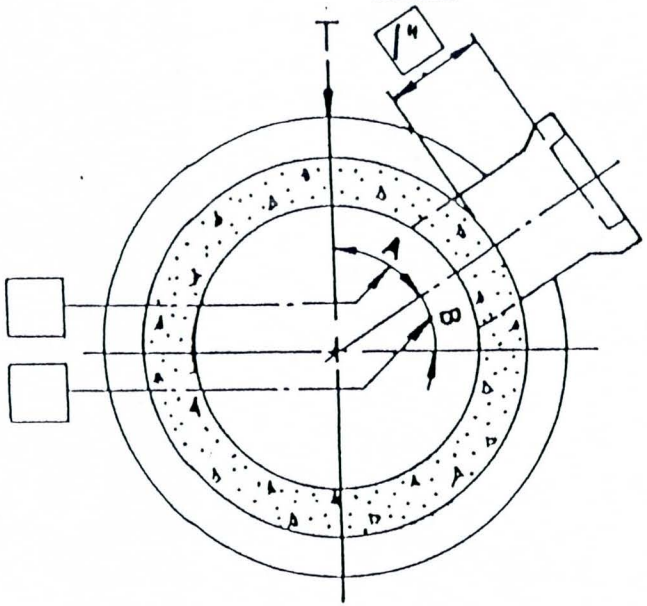

CROSS SECTION

FROM SPIGOT END

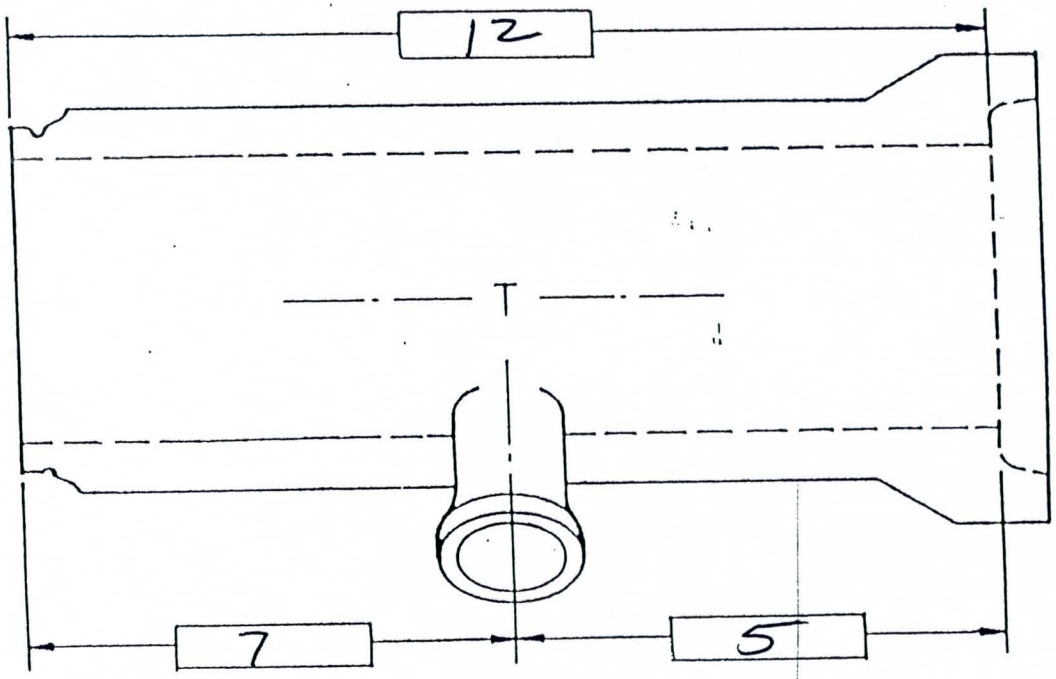

PIPE JOINT NO.	LINE LAYOUT STA.	PLAN STA.	HCC JOB NO.	SCALE	DWG. NO.
461	117+79	117+79	N/A	NTS	22

HYDRO CONDUIT CORPORATION

FACTORY MADE TEE

RCRCP

BY

CK'D.

DATE

REV.

SHEET NO

___ OF 1

CALCULATIONS

	LEFT	RIGHT
$A = R\,(\tan^{-1} \frac{H}{V})$	H = 10	285
$B = R\,(\tan^{-1} \frac{V}{H})$	V = 4.58	2
	R = 63	63

MAINLINE

I.D. 108" CLASS 12' Cou

O.D. 126" WALL A

LATERAL

I.D. 15" CLASS 2000-D

O.D. 19½ WALL B.

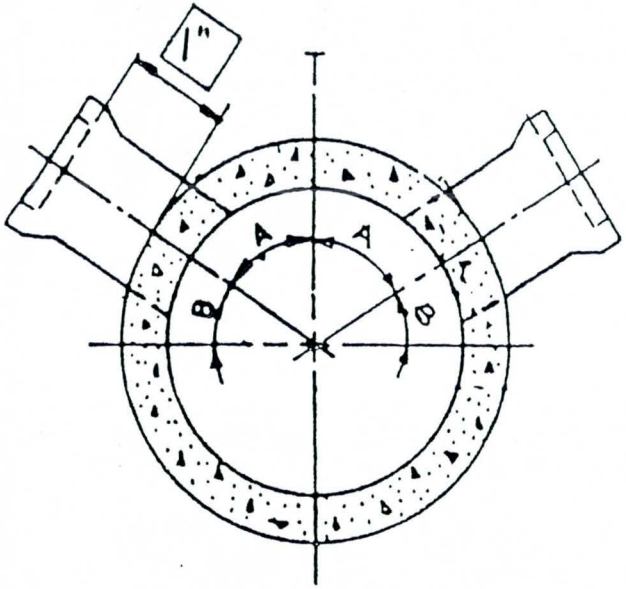

CROSS SECTION

FROM SPIGOT END

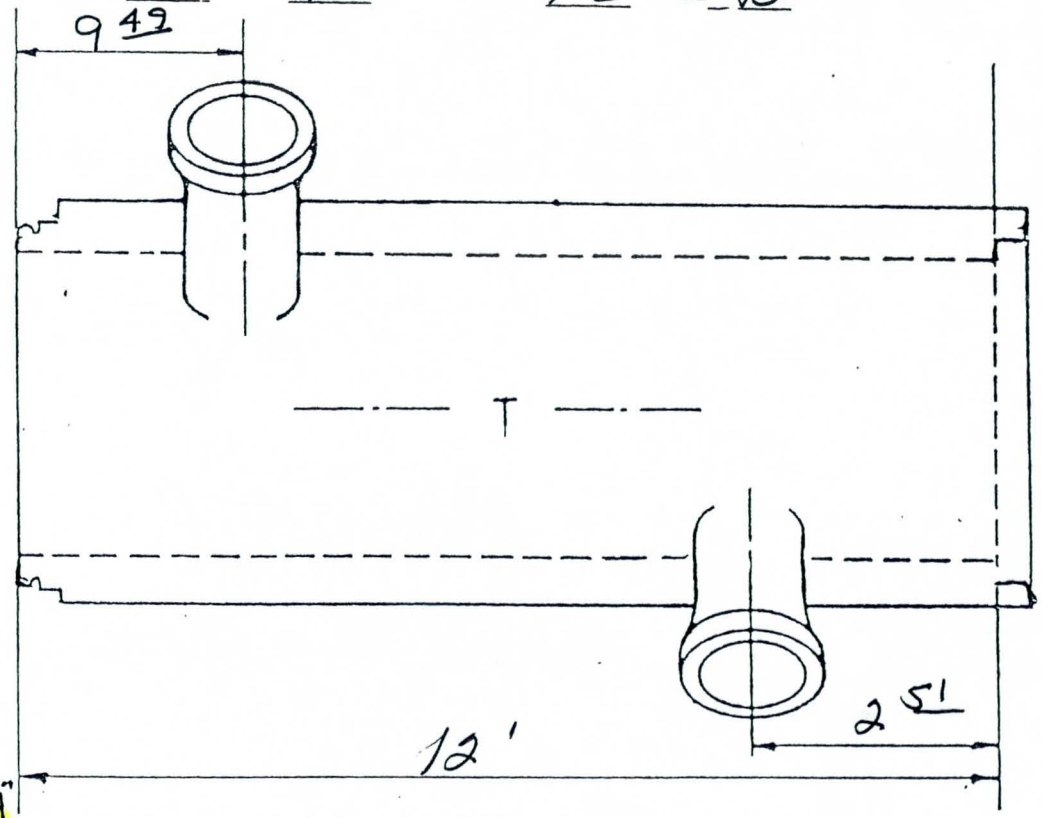

TOP VIEW

LEFT "A" = 71° Right "A" = 95°54"

LEFT "B" = 27° Right "B" = 3°37"

PIPE JOINT NO.	LINE LAYOUT STA	PLAN STA.	HCC JOB NO.	SCALE	DWG. NO.
475	119+50	119+50	N/A	NTS	23

HYDRO CONDUIT CORPORATION	FACTORY MADE TEE T&G RCP — LEFT	BY	DATE	SHEET NO
		CK'D.	REV.	___ OF ___

CALCULATIONS

$A = R\ (\tan^{-1} \frac{H}{V})$ H = N/A

$B = R\ (\tan^{-1} \frac{V}{H})$ V = Round Cage

R =

MAINLINE

I.D. 108" CLASS 12' Cu

O.D. 126" WALL A

LATERAL

I.D. 24" CLASS 2000-0

O.D. 30" WALL B

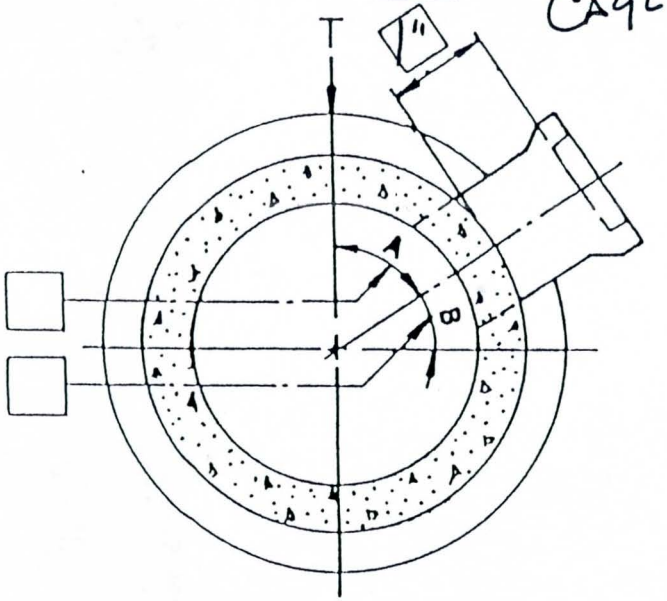

CROSS SECTION

FROM SPIGOT END

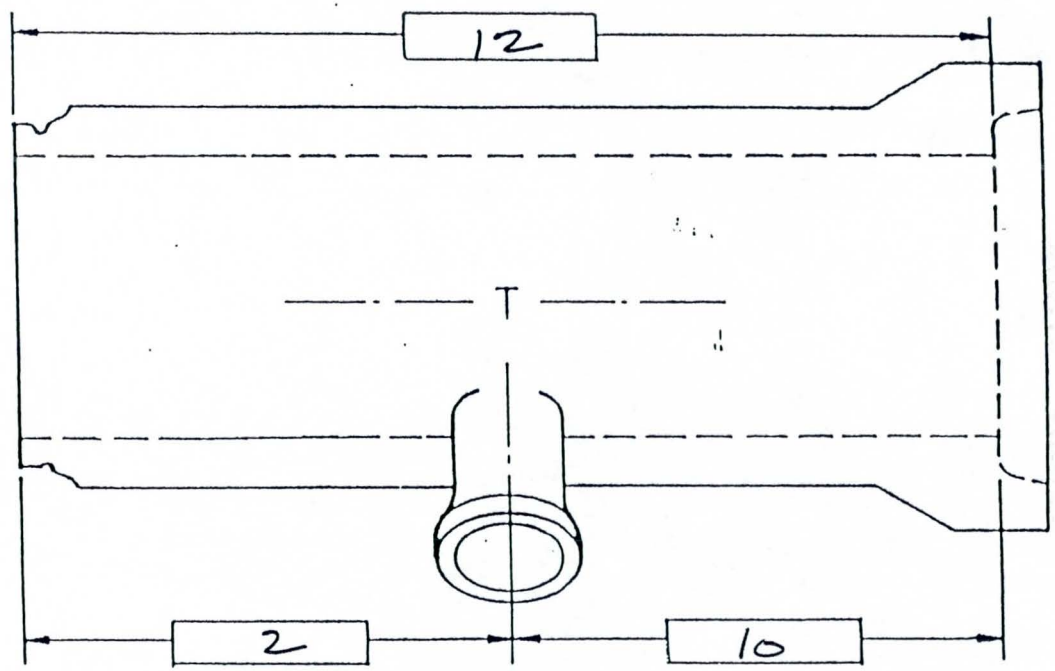

PIPE JOINT NO.	LINE LAYOUT STA.	PLAN STA.	HCC JOB NO.	SCALE	DWG. NO.
532	126 + 28.19	126 + 27	Cactus	NTS	24

HYDRO CONDUIT CORPORATION	FACTORY MADE TEE RGRCP	BY	DATE	SHEET NO
		CK'D.	REV.	1 OF 1

CALCULATIONS

$A = R\ (\tan^{-1} \frac{H}{V})$ H =

$B = R\ (\tan^{-1} \frac{V}{H})$ V =

R =

N/A

MAINLINE

I.D. 108" CLASS 12' Cover

O.D. 126" WALL A

LATERAL

I.D. 15" CLASS 2000-D

O.D. 19½ WALL B

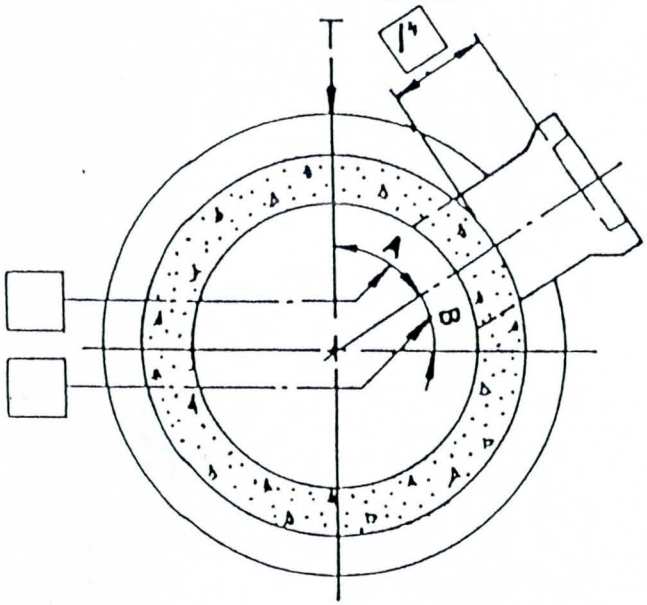

CROSS SECTION

FROM SPIGOT END

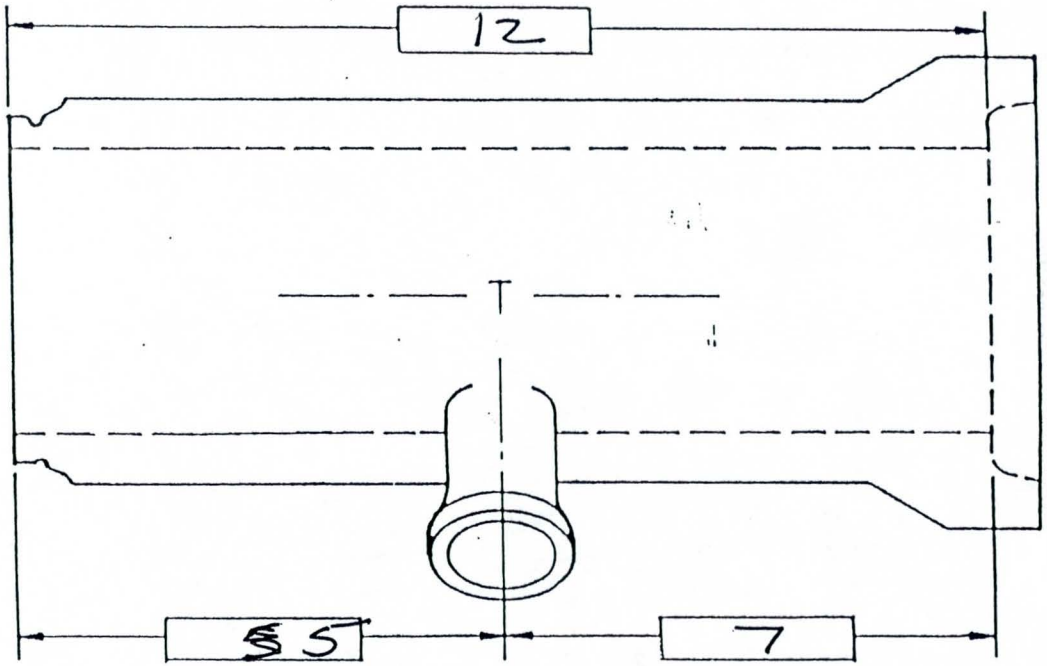

PIPE JOINT NO.	LINE LAYOUT STA.	PLAN STA.	HCC JOB NO.	SCALE	DWG. NO.
533	126 + 45	126+45	Cactus	NTS	25

HYDRO CONDUIT CORPORATION	FACTORY MADE TEE RGRCP	BY	DATE	SHEET NO
		CK'D.	REV.	___ OF 1

CALCULATIONS

$A = R\ (\tan^{-1} \frac{H}{V})$

$B = R\ (\tan^{-1} \frac{V}{H})$

H = N/A

V =

R = Round

MAINLINE

I.D. 108" CLASS 12' Cu

O.D. 126" WALL A

LATERAL

I.D. 42" CLASS 2000-D

O.D. 51" WALL B

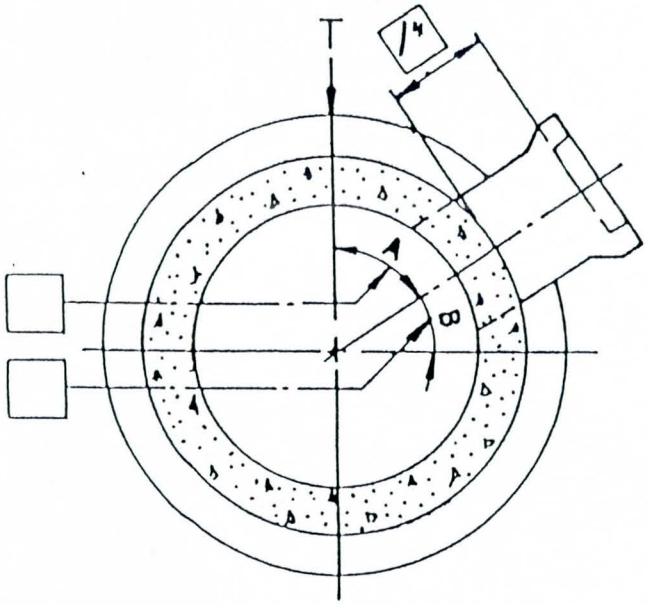

CROSS SECTION

FROM SPIGOT END

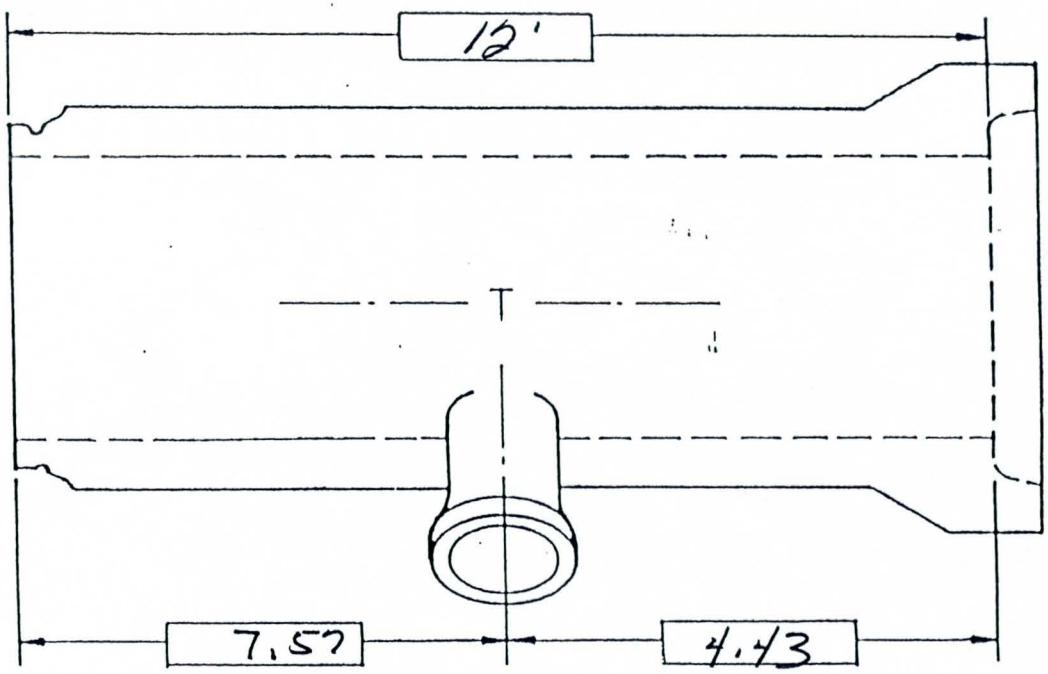

PIPE JOINT NO.	LINE LAYOUT STA.	PLAN STA.	HCC JOB NO.	SCALE	DWG. NO.
540	127+30	127+30	Cactus	NTS	26

HYDRO CONDUIT CORPORATION	FACTORY MADE TEE RGRCP	BY	DATE	SHEET NO
		CK'D.	REV.	___ OF 1

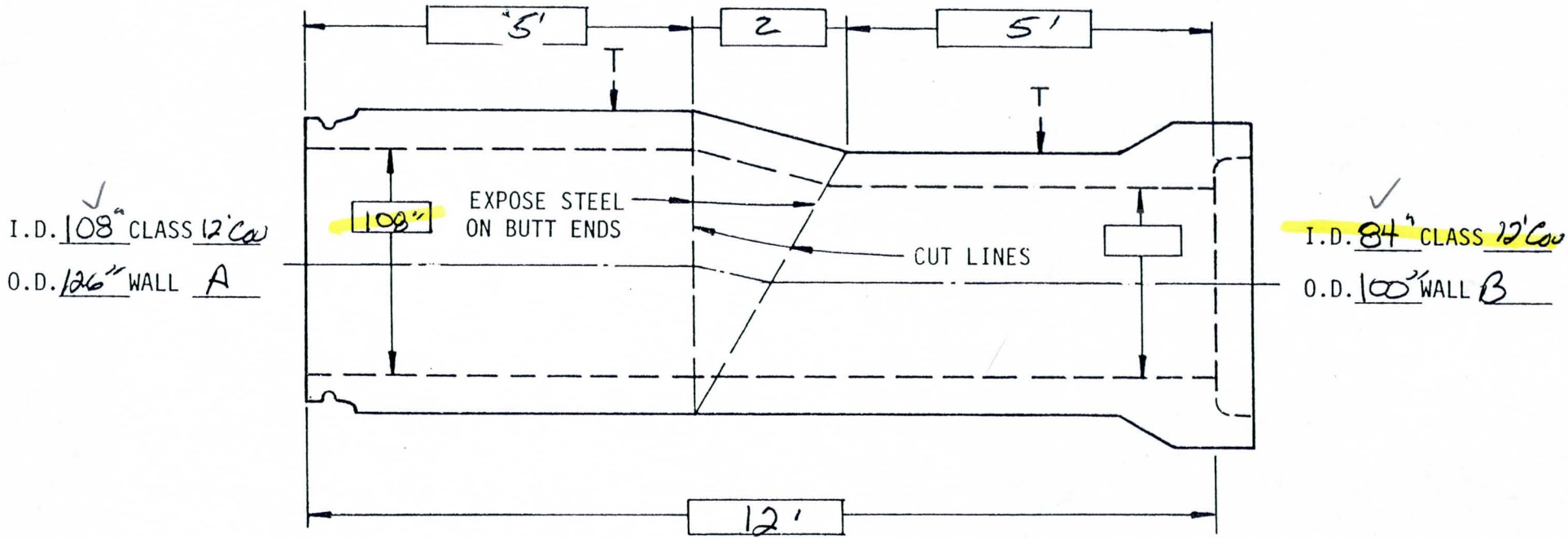

REINFORCE TRANSITION WITH
STEEL AREA OF [ ] $IN^2/FT.$
WELD TO EXPOSED STEEL
SAME AS PIPE

PIPE JOINT NO.	LINE LAYOUT STA.	PLAN STA.	HCC JOB NO.	SCALE	DWG. NO.
541	127+30	127+30 ±	Cactus	NTS	26A

HYDRO CONDUIT CORPORATION	FACTORY MADE REDUCER - RGRCP	BY	DATE	SHEET NO
		CK'D.	REV.	___ OF ___

HCC-19 11-76

CALCULATIONS

$A = R\ (\tan^{-1} \frac{H}{V})$ H =

$B = R\ (\tan^{-1} \frac{V}{H})$ V =

R =

N/A

MAINLINE

I.D. 84" CLASS 12' Cov.

O.D. 100' WALL B

LATERAL

I.D. 15" CLASS 2000-D

O.D. 19½ WALL B

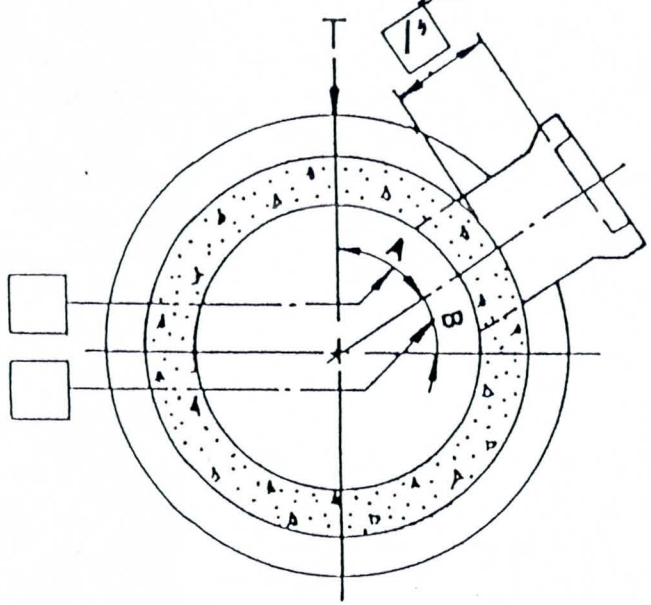

CROSS SECTION

FROM SPIGOT END

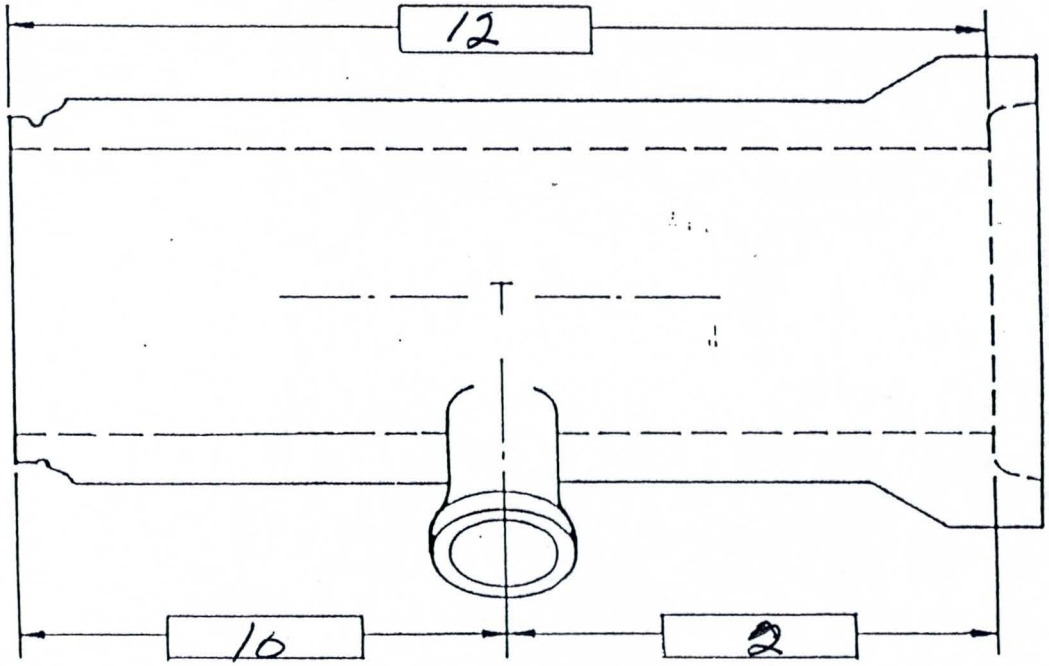

PIPE JOINT NO.	LINE LAYOUT STA.	PLAN STA.	HCC JOB NO.	SCALE	DWG. NO.
546	128+04.64	128+05	Cactus	NTS	27

HYDRO CONDUIT CORPORATION	FACTORY MADE TEE RGRCP	BY	DATE	SHEET NO
		CK'D.	REV.	___ OF 1

CALCULATIONS

$A = R\ (\tan^{-1} \frac{H}{V})$ H = N/A

$B = R\ (\tan^{-1} \frac{V}{H})$ V =

R =

MAINLINE

I.D. 84" CLASS 12' Coo

O.D. 100" WALL B

LATERAL

I.D. 15" CLASS 2000D

O.D. 19½" WALL B

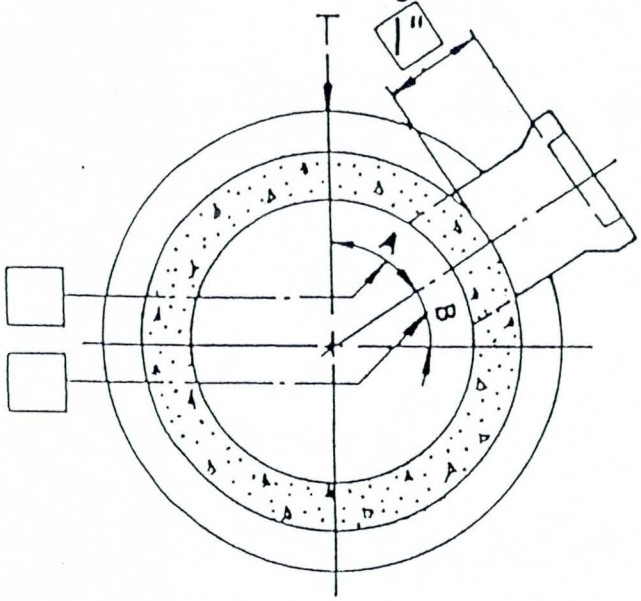

CROSS SECTION

FROM SPIGOT END

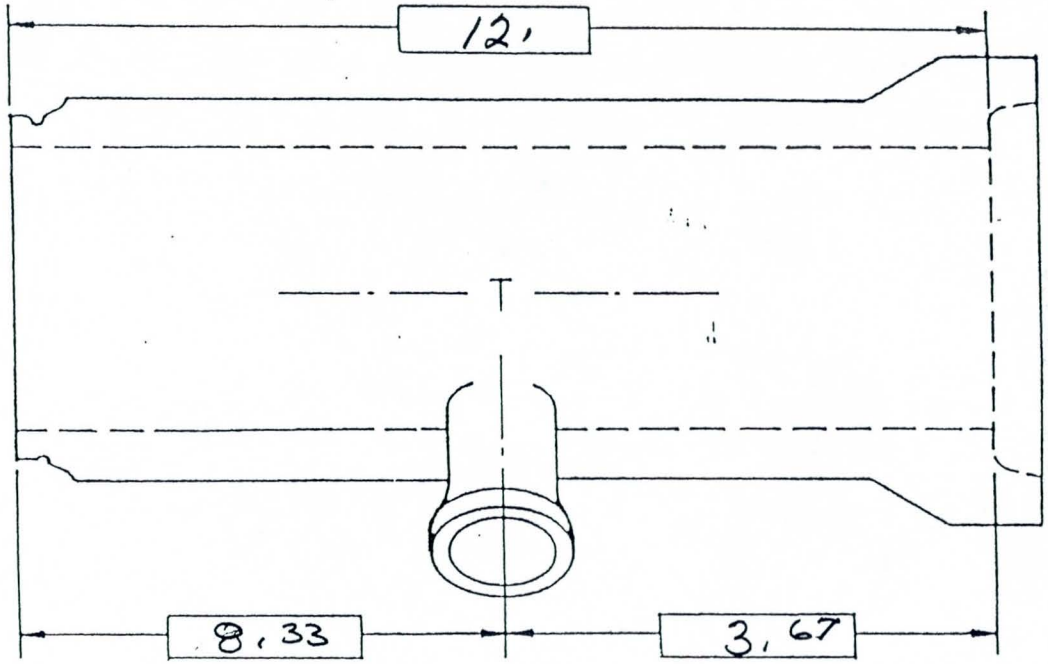

PIPE JOINT NO.	LINE LAYOUT STA.	PLAN STA.	HCC JOB NO.	SCALE	DWG. NO.
547	128 + 15	128 + 15	Cactus	NTS	28
HYDRO CONDUIT CORPORATION	FACTORY MADE TEE RGRCP		BY	DATE	SHEET NO
			CK'D.	REV.	1 OF 1

CALCULATIONS

$A = R\ (\tan^{-1} \frac{H}{V})$ H = N/A

$B = R\ (\tan^{-1} \frac{V}{H})$ V =

R =

MAINLINE

I.D. 84" CLASS 12' Cov

O.D. 100" WALL B

LATERAL

I.D. 15" CLASS 2000D

O.D. 19½ WALL B

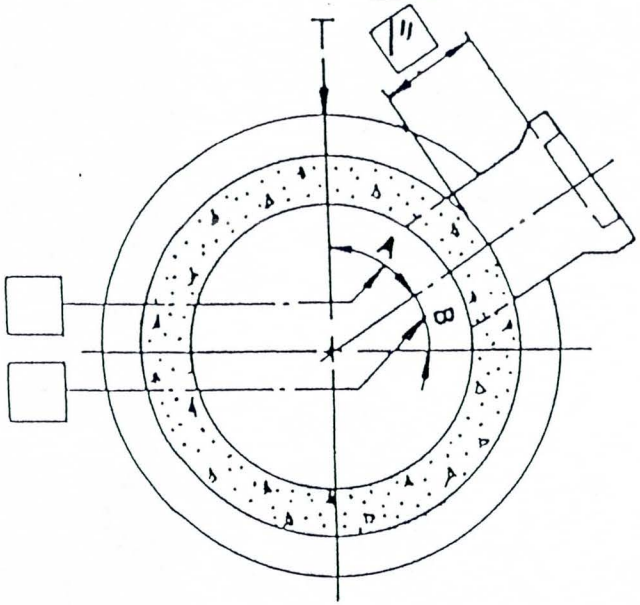

CROSS SECTION

FROM SPIGOT END

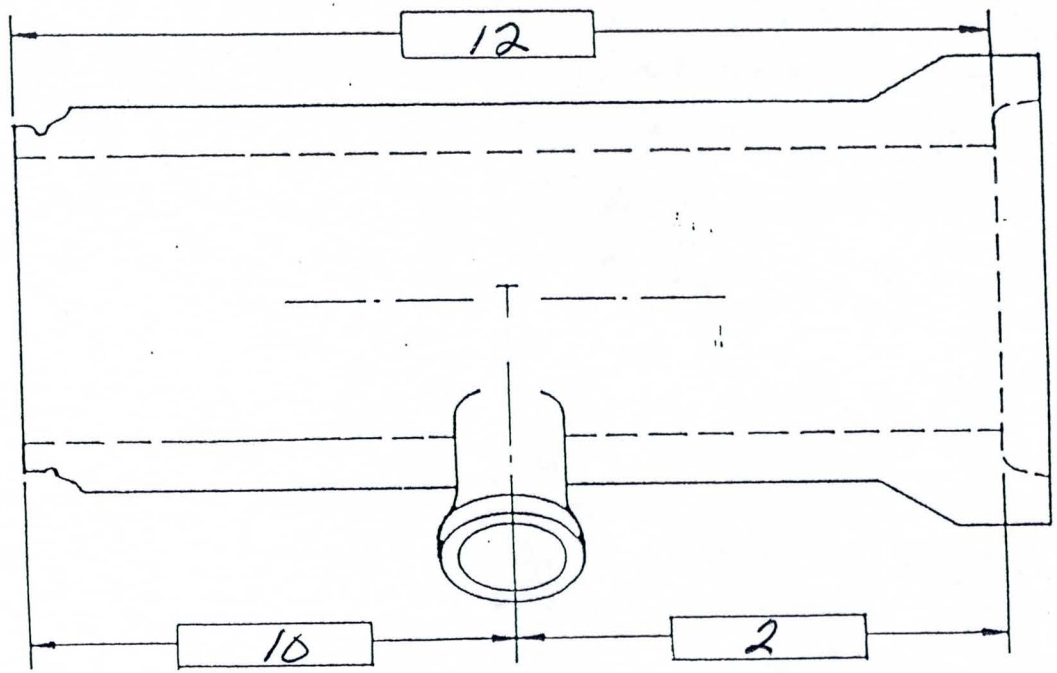

PIPE JOINT NO. 566	LINE LAYOUT STA. 130+45 24	PLAN STA. 130+47	HCC JOB NO. Cactus	SCALE NTS	DWG. NO. 29
HYDRO CONDUIT CORPORATION	FACTORY MADE TEE RGRCP		BY	DATE	SHEET NO
			CK'D.	REV.	___ OF 1

CALCULATIONS

$A = R\ (\tan^{-1} \frac{H}{V})$ H = N/A

$B = R\ (\tan^{-1} \frac{V}{H})$ V =

R =

MAINLINE

I.D. 84" CLASS 12' Cov

O.D. 100' WALL B

LATERAL

I.D. 15" CLASS 2000-D

O.D. 19½ WALL B

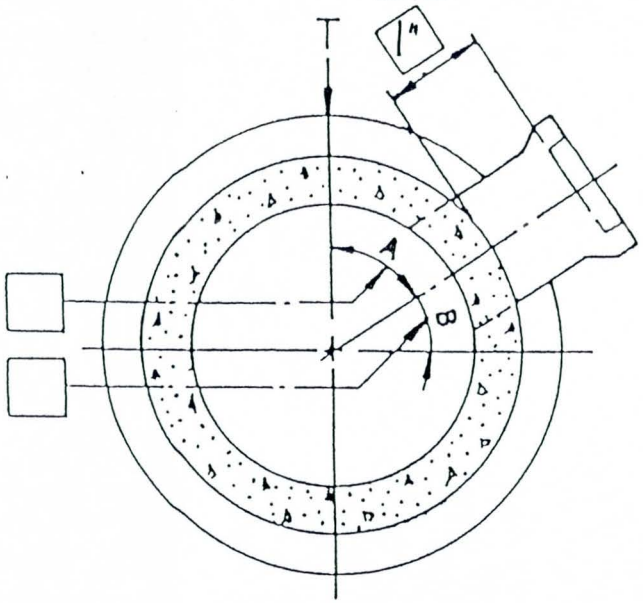

CROSS SECTION

FROM SPIGOT END

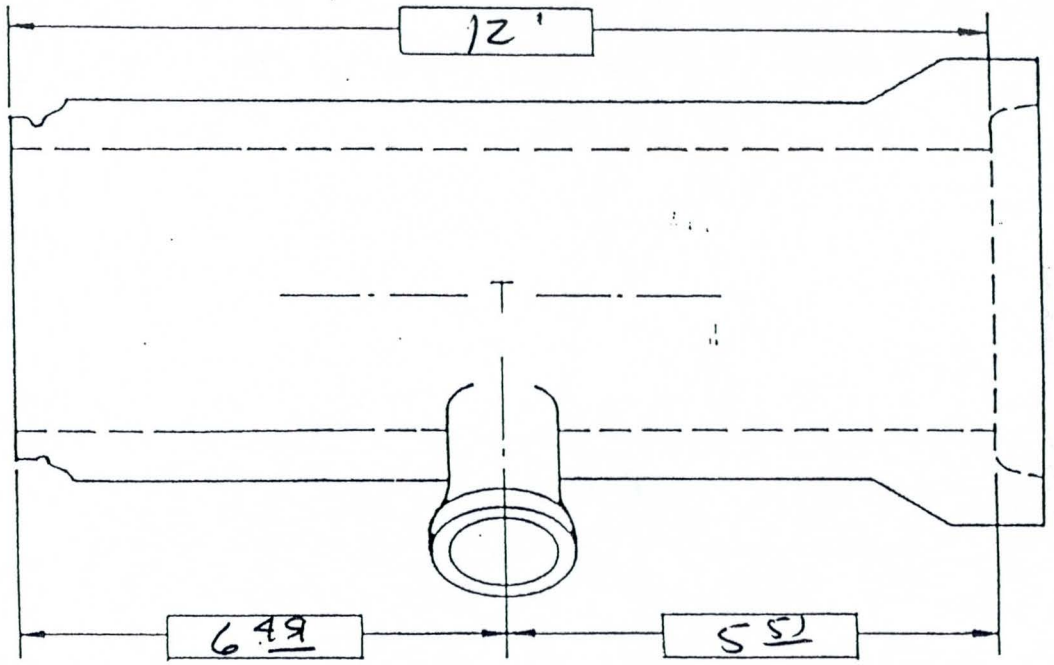

PIPE JOINT NO.	LINE LAYOUT STA.	PLAN STA.	HCC JOB NO.	SCALE	DWG. NO.
575	131+50	131+50	Cactus	NTS	30
HYDRO CONDUIT CORPORATION	FACTORY MADE TEE RGRCP	BY	DATE	SHEET NO	
		CK'D.	REV.	1 OF 1	

Hydro Conduit

DATE 3-15-96 / JS

PAGE 1 OF 4 PAGES

PROJECT CACTUS ROAD STORM DRAIN

- EMBANKMENT @ 10' COVER
  $F_{e_1} = 1.2$
  SOIL = 140 PCF
  LAT. = .33
  BEDDING ANGLE = 75°
  LIVE LOAD - INSIGNIFICANT @ 10' COVER
  $F_c' = 5000$ PSI

THREE PIPE SIZES

84"ø X 8" WALL = 8.33' O.D

108"ø X 9" WALL = 10.50' O.D

120"ø X 10" WALL = 11.67' O.D.

Registered Professional Engineer
CERTIFICATE
RONALD W. METZGER
Date Signed 3-15-96
ARIZONA, U.S.A.

$W_E = F_e \, w \, B_c \, H$

$W_{E84} = 1.2(140)(8.33)(10) = 13{,}995$ LBS/FT

$W_{E108} = 1.2(140)(10.50)(10) = 17{,}640$ LBS/FT

$W_{E120} = 1.2(140)(11.67)(10) = 19{,}606$ LBS/FT

SEE COMPUTER PRINTOUTS FOR STEEL DESIGNS - SHTS 2, 3 & 4 OF 4.

DESIGNS PER AASHTO STANDARD SPECIFICATIONS FOR HIGHWAY BRIDGES - DIVISION I SECTION 17.
"SOIL-REINFORCED CONCRETE - STRUCTURE INTERACTION SYSTEMS"

HYDRO CONDUIT CORPORATION
****

2 OF 4

PROJECT TITLE CACTUS ROAD STORM DRAIN

PROGRAMMER JS DATE 03-15-1996

THE PIPE DIAMETER IS 84 INCHES
THE WALL THICKNESS IS 8.000 INCHES

THE BEDDING ANGLE IS 75.00 DEGREES

THE PIPE WEIGHT IS 2488.8 LBS/FT
THE WATER WEIGHT IS 2401.4 LBS/FT

THE ULTIMATE STRENGTH LOAD FACTOR IS 1.300

INSIDE, COVER OVER THE CAGE IS 1.2500 INCHES
INSIDE, C TO C SPACING OF THE CAGE IS 3.0000 INCHES
INSIDE, THE NUMBER OF LAYERS OF STEEL IN THE CAGE IS 1
INSIDE, MINIMUM STEEL AREA IS 0.130 SI/FT

OUTSIDE, COVER OVER THE CAGE IS 1.0000 INCHES
OUTSIDE, C TO C SPACING OF THE CAGE IS 3.0000 INCHES
OUTSIDE, THE NUMBER OF LAYERS OF STEEL IN THE CAGE IS 1
OUTSIDE, MINIMUM STEEL AREA IS 0.098 SI/FT

MAX STEEL RADIAL TENSION CONTROL IS 1.223
THE RADIAL TENSION FACTOR IS 1.00
THE VALUE OF BSUB1 (CONCRETE STRENGTH FACTOR) IS 0.80000
THE CAPACITY REDUCTION FACTOR PHI IS 1.0000 FOR BENDING
THE CAPACITY REDUCTION FACTOR PHI IS 0.9000 FOR SHEAR

STEEL YIELD IS 40000 PSI
STEEL TYPE IS HOT ROLLED ROD

ULTIMATE, CONCRETE IS 5000 PSI

Registered Professional Engineer
CERTIFICATE
METLGER
Date Signed 3-15-96
ARIZONA, U.S.A.

EARTH LOAD IS 13995 LBS/FT

THE BEDDING ANGLE IS 75.00 DEGREES
RATIO SIDE/VERTICAL = 0.3300

ANGLE THETA DEGS	MOMENT AT ULT IN LBS	THRUST AT ULT POUNDS	SHEAR AT ULT POUNDS	DEPTH D INCHES	X-AREA STEEL SI/FT	STEEL LOCAT ION	MU OVER VUPHID	ALLOWABLE ULT SHEAR POUNDS
0	142664	2500	0	6.545	0.528	INNER		
20	101980	4357	4846	6.545	0.528	INNER	3.5726	8860
21	98011	4538	5042	6.545	0.528	INNER	3.3003	8862
22	93887	4727	5231	6.545	0.528	INNER	3.0472	8866
23	89614	4922	5413	6.545	0.528	INNER	2.8106	8873
24	85197	5124	5588	6.545	0.528	INNER	2.5884	8882
25	80643	5332	5756	6.545	0.528	INNER	2.3785	8893
79	-111101	9890	544	6.851	0.277	OUTER		
80	-111480	9880	400	6.851	0.278	OUTER		
81	-111743	9868	256	6.851	0.280	OUTER		
82	-111892	9855	114	6.851	0.280	OUTER		
83	-111927	9840	27	6.850	0.281	OUTER		
84	-111849	9823	167	6.850	0.281	OUTER		
85	-111659	9805	306	6.851	0.280	OUTER		

HYDRO CONDUIT CORPORATION
****

30F4

PROJECT TITLE CACTUS ROAD STORM DRAIN

PROGRAMMER JS DATE 03-15-1996

THE PIPE DIAMETER IS 108 INCHES
THE WALL THICKNESS IS 9.000 INCHES

THE BEDDING ANGLE IS 75.00 DEGREES

THE PIPE WEIGHT IS 3560.8 LBS/FT
THE WATER WEIGHT IS 3969.7 LBS/FT

THE ULTIMATE STRENGTH LOAD FACTOR IS 1.300

INSIDE, COVER OVER THE CAGE IS 1.2500 INCHES
INSIDE, C TO C SPACING OF THE CAGE IS 3.0000 INCHES
INSIDE, THE NUMBER OF LAYERS OF STEEL IN THE CAGE IS 1
INSIDE, MINIMUM STEEL AREA IS 0.211 SI/FT

OUTSIDE, COVER OVER THE CAGE IS 1.0000 INCHES
OUTSIDE, C TO C SPACING OF THE CAGE IS 3.0000 INCHES
OUTSIDE, THE NUMBER OF LAYERS OF STEEL IN THE CAGE IS 1
OUTSIDE, MINIMUM STEEL AREA IS 0.158 SI/FT

MAX STEEL RADIAL TENSION CONTROL IS 1.563
THE RADIAL TENSION FACTOR IS 1.00
THE VALUE OF BSUB1 (CONCRETE STRENGTH FACTOR) IS 0.80000
THE CAPACITY REDUCTION FACTOR PHI IS 1.0000 FOR BENDING
THE CAPACITY REDUCTION FACTOR PHI IS 0.9000 FOR SHEAR

STEEL YIELD IS 40000 PSI
STEEL TYPE IS HOT ROLLED ROD

ULTIMATE, CONCRETE IS 5000 PSI

Registered Professional Engineer
CERTIFICATE NO. 9
FRED W. METCALF
Date Signed 3-15-96
ARIZONA, U.S.A.

EARTH LOAD IS 17640 LBS/FT

THE BEDDING ANGLE IS 75.00 DEGREES
RATIO SIDE/VERTICAL = 0.3300

ANGLE THETA DEGS	MOMENT AT ULT IN LBS	THRUST AT ULT POUNDS	SHEAR AT ULT POUNDS	DEPTH D INCHES	X-AREA STEEL SI/FT	STEEL LOCAT ION	MU OVER VUPHID	ALLOWABLE ULT SHEAR POUNDS
0	240765	2672	0	7.497	0.802	INNER		
21	165193	5398	6708	7.497	0.802	INNER	3.6498	10715
22	158215	5650	6959	7.497	0.802	INNER	3.3694	10725
23	150985	5911	7201	7.497	0.802	INNER	3.1073	10738
24	143513	6181	7434	7.497	0.802	INNER	2.8611	10753
25	135808	6459	7657	7.497	0.802	INNER	2.6286	10770
26	127881	6746	7870	7.497	0.802	INNER	2.4082	10790
79	-187162	12548	676	7.811	0.447	OUTER		
80	-187755	12533	484	7.811	0.450	OUTER		
81	-188152	12517	295	7.810	0.451	OUTER		
82	-188357	12498	106	7.810	0.452	OUTER		
83	-188369	12477	81	7.810	0.453	OUTER		
84	-188191	12454	267	7.810	0.452	OUTER		
85	-187825	12428	451	7.810	0.451	OUTER		

HYDRO CONDUIT CORPORATION
****

4 of 4

PROJECT TITLE CACTUS ROAD STORM DRAIN

PROGRAMMER JS DATE 03-15-1996

THE PIPE DIAMETER IS 120 INCHES
THE WALL THICKNESS IS 10.000 INCHES

THE BEDDING ANGLE IS 75.00 DEGREES

THE PIPE WEIGHT IS 4396.0 LBS/FT
THE WATER WEIGHT IS 4900.9 LBS/FT

THE ULTIMATE STRENGTH LOAD FACTOR IS 1.300

INSIDE, COVER OVER THE CAGE IS 1.2500 INCHES
INSIDE, C TO C SPACING OF THE CAGE IS 3.0000 INCHES
INSIDE, THE NUMBER OF LAYERS OF STEEL IN THE CAGE IS 1
INSIDE, MINIMUM STEEL AREA IS 0.260 SI/FT

OUTSIDE, COVER OVER THE CAGE IS 1.0000 INCHES
OUTSIDE, C TO C SPACING OF THE CAGE IS 3.0000 INCHES
OUTSIDE, THE NUMBER OF LAYERS OF STEEL IN THE CAGE IS 1
OUTSIDE, MINIMUM STEEL AREA IS 0.195 SI/FT

MAX STEEL RADIAL TENSION CONTROL IS 1.732
THE RADIAL TENSION FACTOR IS 1.00
THE VALUE OF BSUB1 (CONCRETE STRENGTH FACTOR) IS 0.80000
THE CAPACITY REDUCTION FACTOR PHI IS 1.0000 FOR BENDING
THE CAPACITY REDUCTION FACTOR PHI IS 0.9000 FOR SHEAR

STEEL YIELD IS 40000 PSI
STEEL TYPE IS HOT ROLLED ROD

ULTIMATE, CONCRETE IS 5000 PSI

Registered Professional Engineer (Civil) CERTIFICATE NO. 18176 RONALD W. METZGER Date Signed 3-15-96 ARIZONA, U.S.A.

EARTH LOAD IS 19606 LBS/FT

THE BEDDING ANGLE IS 75.00 DEGREES
RATIO SIDE/VERTICAL = 0.3300

ANGLE THETA DEGS	MOMENT AT ULT IN LBS	THRUST AT ULT POUNDS	SHEAR AT ULT POUNDS	DEPTH D INCHES	X-AREA STEEL SI/FT	STEEL LOCAT ION	MU OVER VUPHID	ALLOWABLE ULT SHEAR POUNDS
0	306438	2739	0	8.481	0.907	INNER		
21	210100	5872	7695	8.481	0.907	INNER	3.5769	11720
22	201206	6162	7983	8.481	0.907	INNER	3.3019	11734
23	191991	6462	8261	8.481	0.907	INNER	3.0448	11750
24	182467	6772	8528	8.481	0.907	INNER	2.8032	11768
25	172646	7092	8783	8.481	0.907	INNER	2.5752	11789
26	162543	7422	9027	8.481	0.907	INNER	2.3589	11812
79	-237973	14070	745	8.799	0.509	OUTER		
80	-238694	14053	525	8.798	0.512	OUTER		
81	-239166	14032	308	8.798	0.514	OUTER		
82	-239393	14010	92	8.797	0.515	OUTER		
83	-239376	13984	122	8.797	0.515	OUTER		
84	-239116	13956	335	8.798	0.514	OUTER		
85	-238617	13925	546	8.798	0.513	OUTER		

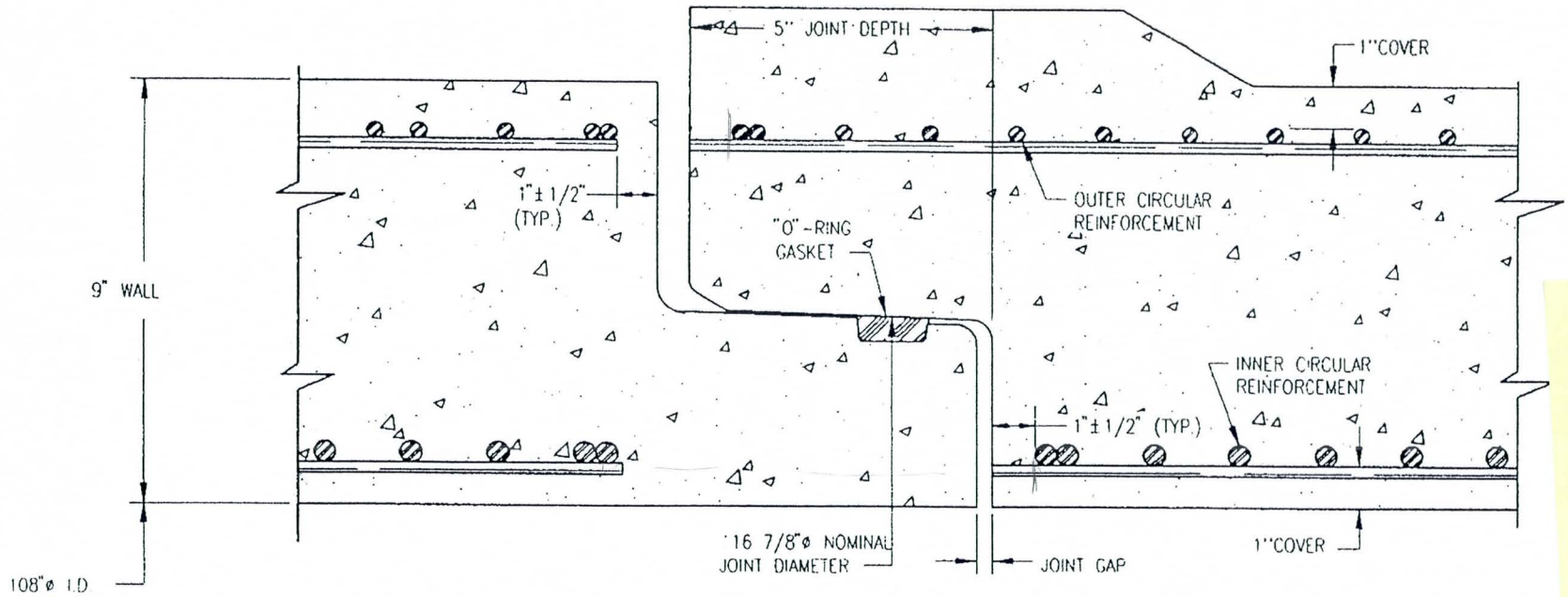

SECTION: "X"-"X"

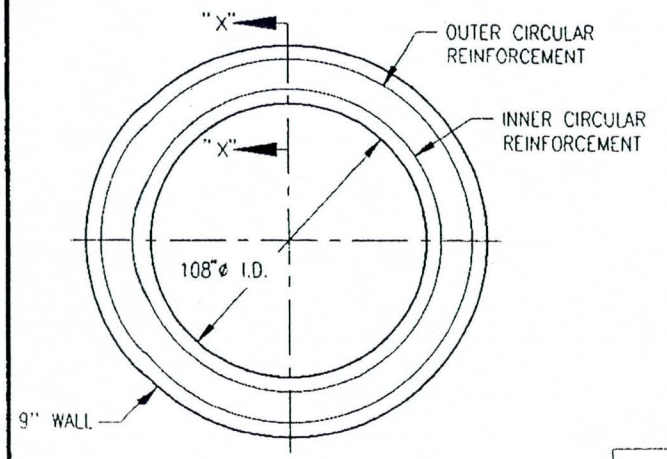

SECTION THRU BARREL

NOTES:

1) FOR ADDITIONAL INFORMATION SEE APPROPRIATE PIPE SPECIFICATION SHEET.

REV.	DESCRIPTION	BY:	DATE

CSR BUILDING IN QUALITY ™

Hydro Conduit

SCALE : N.T.S.	DR. BY : E. JACKSON
DATE : MAR. 25, 1996	CK. BY :

108"ø I.D. x 9" WALL / JOINT DETAIL
DRI-CAST / BIG BELL RUBBER GASKET

PROJECT: Cactus Road
LOCATION:

DRAWING NUMBER: 8130-CE-326 (SHEET 2)

FOR APPROVAL

HYDRO CONDUIT CORPORATION

MAR 25 1996

CORPORATE ENGINEERING DEPARTMENT

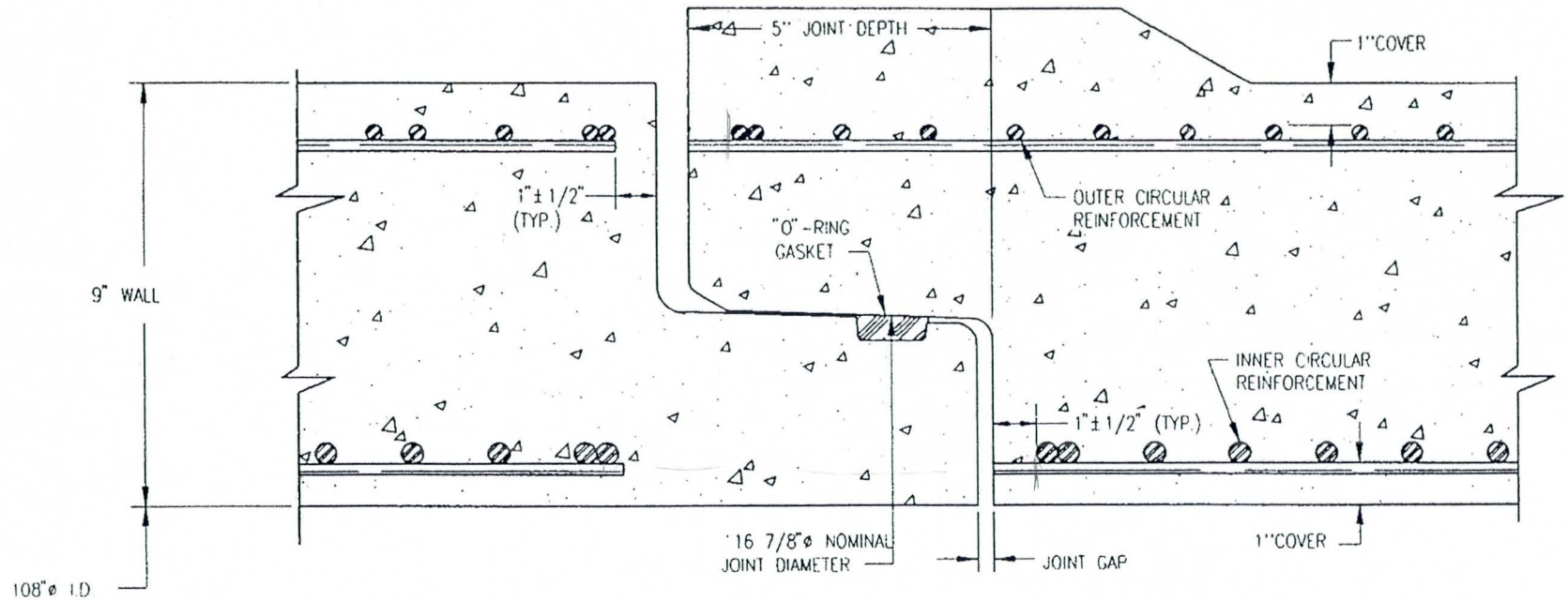

SECTION: "X"-"X"

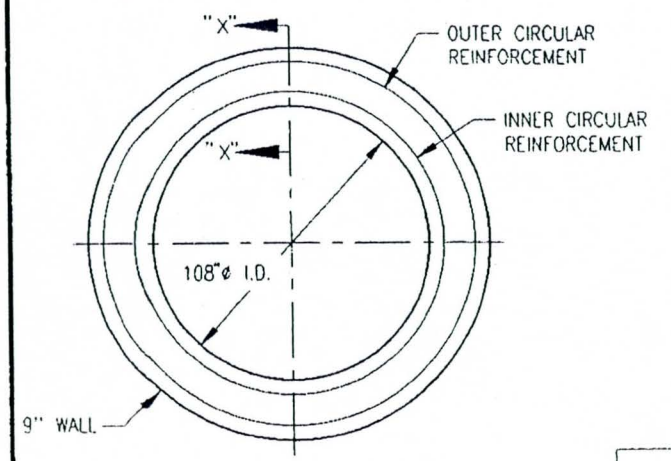

SECTION THRU BARREL

NOTES:

1) FOR ADDITIONAL INFORMATION SEE APPROPRIATE PIPE SPECIFICATION SHEET.

REV.	DESCRIPTION	BY:	DATE

CSR BUILDING IN QUALITY ™

Hydro Conduit

SCALE : N.T.S.	DR. BY : E. JACKSON
DATE : MAR. 25, 1996	CK. BY :

108"ø I.D. x 9" WALL / JOINT DETAIL
DRI-CAST / BIG BELL RUBBER GASKET

PROJECT: Cactus Road
LOCATION:

DRAWING NUMBER: B130-CE-326 (SHEET 2)

FOR APPROVAL

HYDRO CONDUIT CORPORATION

MAR 25 1996

CORPORATE ENGINEERING DEPARTMENT

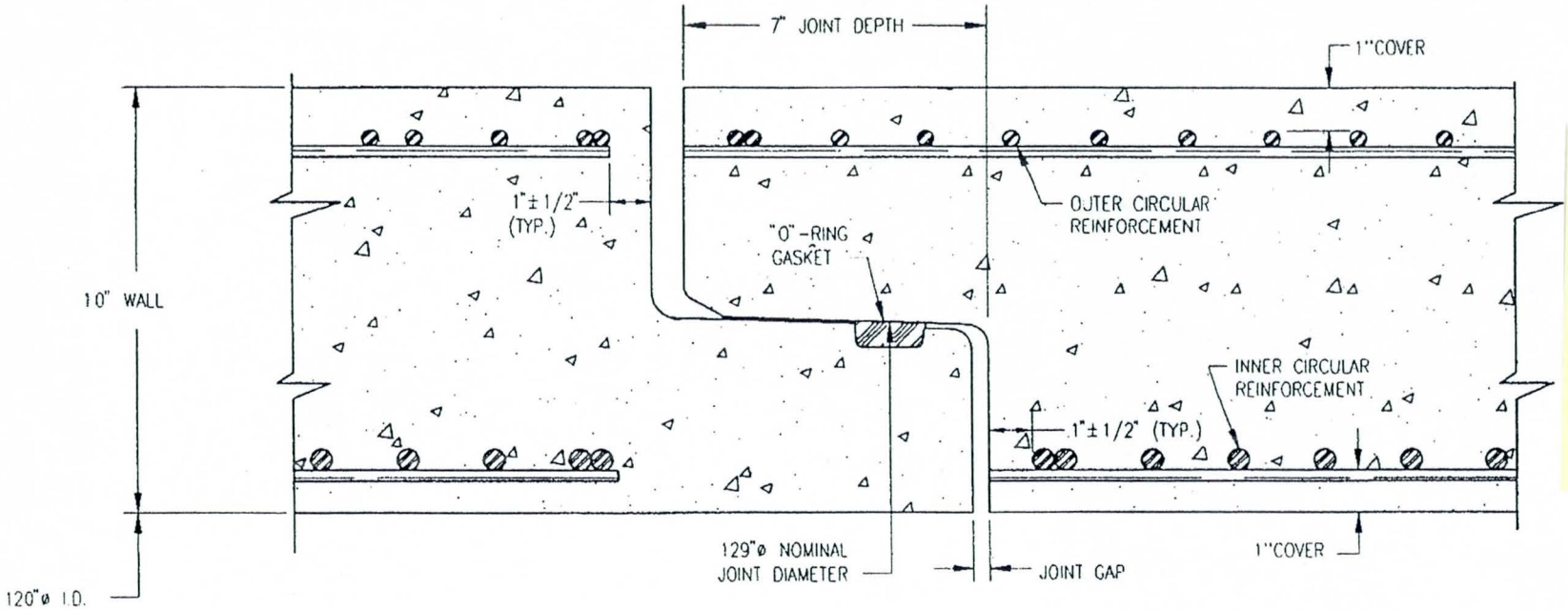

SECTION: "X"-"X"

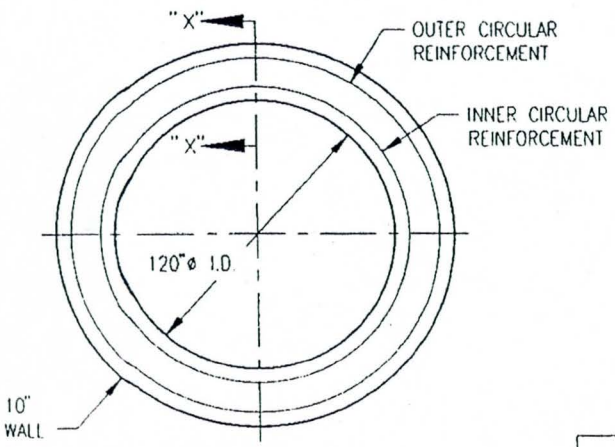

SECTION THRU BARREL

NOTES:

1) FOR ADDITIONAL INFORMATION SEE APPROPRIATE PIPE SPECIFICATION SHEET.

REV.	DESCRIPTION	BY:	DATE

CSR BUILDING ON QUALITY

Hydro Conduit

SCALE : N.T.S.	DR. BY : E. JACKSON
DATE : MAR. 25, 1996	CK. BY :

120"ø I.D. x 10" WALL / JOINT DETAIL
DRI-CAST / FLUSH BELL RUBBER GASKET

PROJECT: Cactus Road
LOCATION:

DRAWING NUMBER
B130-CE-326
(SHEET 1)

FOR APPROVAL

HYDRO CONDUIT CORPORATION
MAR 25 1996
CORPORATE ENGINEERING DEPARTMENT

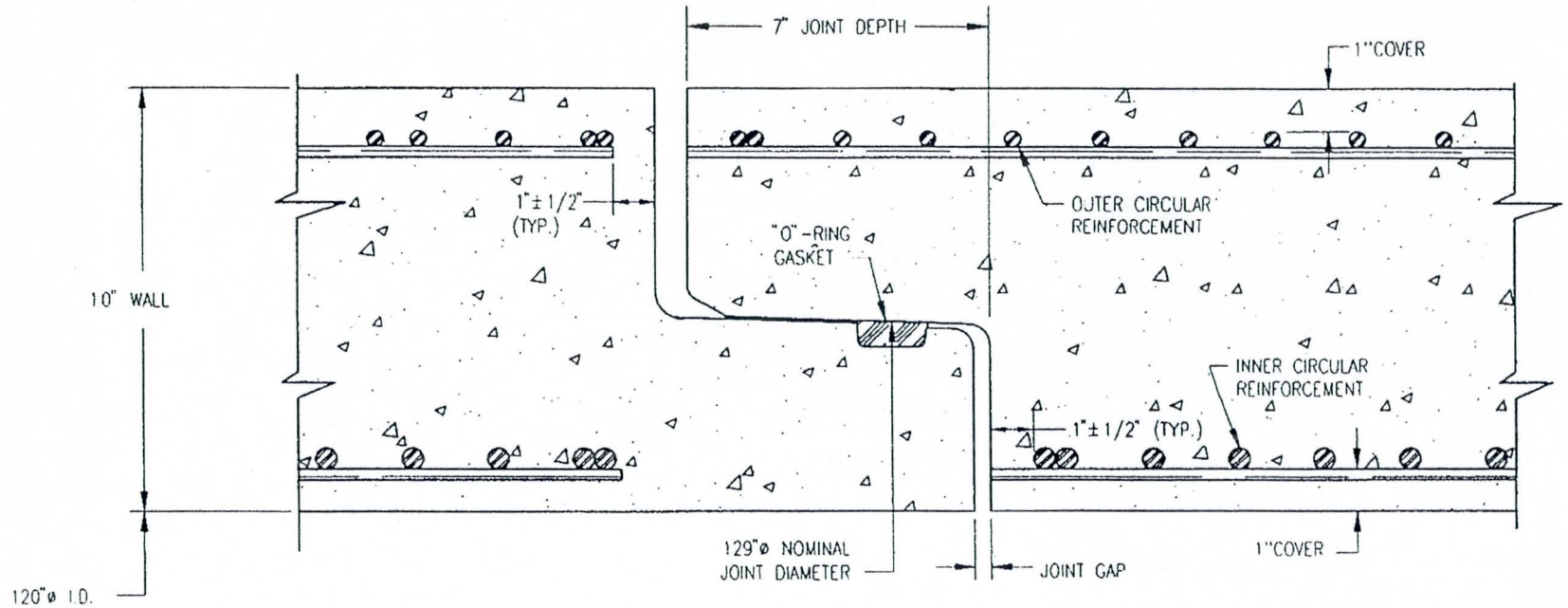

SECTION: "X"-"X"

NOTES:

1) FOR ADDITIONAL INFORMATION SEE APPROPRIATE PIPE SPECIFICATION SHEET.

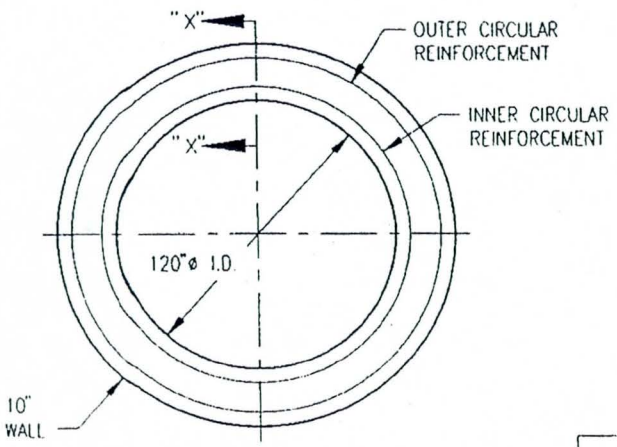

SECTION THRU BARREL

REV.	DESCRIPTION	BY:	DATE

CSR BUILDING ON QUALITY ™

Hydro Conduit

SCALE : N.T.S.	DR. BY : E. JACKSON
DATE : MAR. 25, 1996	CK. BY :

120"ø I.D. x 10" WALL / JOINT DETAIL
DRI-CAST / FLUSH BELL RUBBER GASKET

PROJECT: Cactus Road
LOCATION:

DRAWING NUMBER: 8130-CE-326 (SHEET 1)

FOR APPROVAL

HYDRO CONDUIT CORPORATION
MAR 25 1996
CORPORATE ENGINEERING DEPARTMENT

HYDRO CONDUIT CORPORATION

Vihy Dri-Cast Pipe
"O" Ring Rubber Gasket
30"-96" Diameter

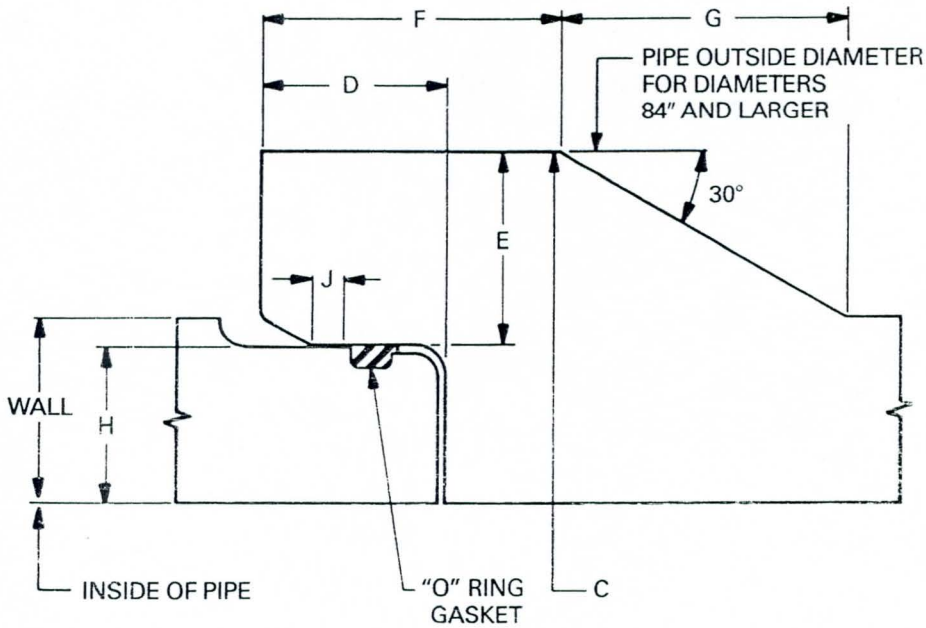

Table of Dimensions and Weights												
Pipe Inside Diameter Inches	Wall Thickness Inches	Bell O.D. C Inches	Bell Depth D Inches	Bell Thickness E Inches	Bell Length F Inches	Bell Taper G Inches	Spigot Thickness H Inches	Gasket Diameter Inches	J Inches	Nominal Laying Length Feet	Approx. Wt/Joint Pounds 12 Ft. Length	Approx. Wt/Joint Pounds 16 Ft. Length
30	3½	42¼	4⅝	3⅜	7⅛	4 17/32	2⅞	13/16	1⅛	12	5180	
36	4	50¼	4⅞	4	7⅜	5 13/32	3¼	13/16	1⅜	12	7120	
36	4¾	50¼	4⅞	4	7⅜	4⅛	3¼	13/16	1⅜	12	8520	
42	4½	58	5¼	4⅜	7¾	6 1/16	3¾	13/16	1¾	12	9340	
48	5	64	5½	4⅜	8	5 3/16	3¾	13/16	2	12 & 16	11640	15480
48	5¾	64	5½	4⅜	8	3⅞	3¾	13/16	2	16		18070
54	5½	70	5½	4⅜	8	4 5/16	3¾	13/16	2	12 & 16	14180	18860
60	6	76	5½	4⅜	8	3 15/32	3¾	13/16	2	12 & 16	16970	22570
66	7¼	82	5½	4⅜	8	1 5/16	3¾	13/16	2	12	23028	
72	7	88	5½	4⅜	8	1 23/32	3¾	13/16	2	12	23340	
78	7½	94	5½	4⅜	8	⅞	3¾	13/16	2	12	26920	
84	8	100	5¾	4½			3⅝	13/16	2¼	12	30770	
90	8½	107	6⅛	4¾			3⅞	13/16	2⅝	12	35000	
96	9	114	6⅝	5			4⅛	13/16	3⅛	12	39510	

All dimensions nominal

NOTES:

1. Consult Hydro Conduit Corporation for further details not listed.

PHOENIX
4242 West Buckeye Road
Phoenix, Arizona 85009
P.O. Box 6220
Phoenix, Arizona 85005
(602) 278-3526

WR 131
52
Issued 6/89

Hydro Conduit

Packerhead Pipe
"O" Ring Rubber Gasket
12"-36" Diameter
B-Wall Design

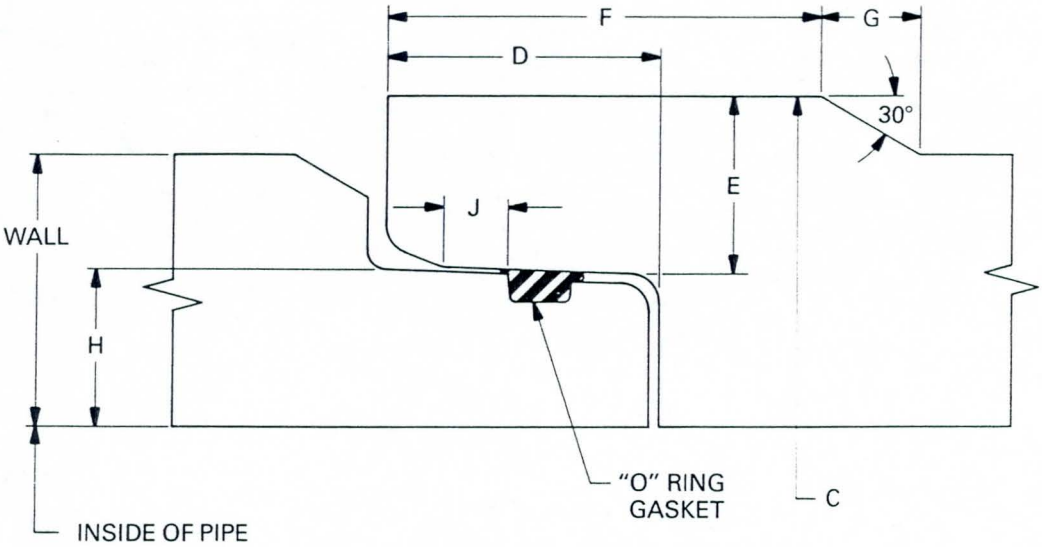

Table of Dimensions and Weights											
Wall B											
Pipe Inside Diameter Inches	Wall Thickness Inches	Pipe O.D. @ Bell C Inches	Bell Depth D Inches	Bell Thickness E Inches	Outside Bell Depth F Inches	Bell Taper G Inches	Spigot Thickness H Inches	Gasket Diameter Inches	J Inches	Nominal Laying Length Feet	Approx. Weight Per Joint Pounds
12	2	19 11/16	3	2	4 1/8	3 1/4	1 13/16	21/32	7/8	5	480
15	2 1/4	22 9/16	3	1 15/16	4 3/8	2 5/8	1 13/16	21/32	7/8	5	680
18	2 1/2	27 1/2	4	2 11/16	5 3/4	3 1/8	2 1/8	21/32	1 1/8	7 1/2	1320
24	3	33 5/16	3 1/2	2 1/2	6 1/8	2 7/8	2 1/8	21/32	13/16	7 1/2	2154
30	3 1/2	40 5/16	3 1/2	2 3/4	7 1/2	2 3/4	2 3/8	21/32	13/16	7 1/2	2964
36	4	47 13/16	3 1/2	3 3/16	8	3 3/8	2 3/4	21/32	13/16	7 1/2	4178

All dimensions nominal

NOTES:

1. Consult Hydro Conduit Corporation for further details not listed.

PHOENIX
4242 West Buckeye Road
Phoenix, Arizona 85009
P.O. Box 6220
Phoenix, Arizona 85005
(602) 278-3526

WR 152
52
Issued 9/88

Connector PIpe Summary

Station	RUN LENGTH	DIAMETER	CLASS	# OF JOIN Require
				0
100+57	80.00	66	2000-D	11
80+87	32.00	15	2000-D	6
80+30	27.00	15	2000-D	5
86+74 Rt.	35.00	~~18~~ 15"	2000-D	5
86+74 Lt.	26.00	24	2000-D	4
87+5.5	38.00	24	2000-D	5
87+29	62.00	36	2000-D	9
88+18	33.00	15	2000-D	6
90+0	27.00	15	2000-D	5
94+95	34.00	15	2000-D	6
94+95	27.00	15	2000-D	5
99+75	26.00	15	2000-D	5
100+98	~~67.00~~ 61	24	2000-D	9
101+32	32.00	15	2000-D	6
101+32	28.00	15	2000-D	5
106+0 Rt	~~29.00~~ 32	15	2000-D	5
106+0 Lt	28.00	15	2000-D	5
112+93	33.00	15	2000-D	6
112+93	25.00	15	2000-D	5
116+8	23.00	15	2000-D	4
119+50 Rt.	41.00	15	2000-D	7
119+50 Lt	24.00	15	2000-D	4
126+45	34.00	15	2000-D	6
126+27	26.00	~~15~~ 24"	2000-D	5
127+69	38.00	24	2000-D	5
127+29	72.00	42	2000-D	10
128+5	33.00	15	2000-D	6
131+50	33.00	15	2000-D	6
128+15	27.00	15	2000-D	5
130+47	27.00	15	2000-D	5
117+79	23.00	15	2000-D	4
87+78	26.00	15	2000-D	5
83+52	27.00	15	2000-D	5
77+35	27.00	15	2000-D	5
75+20	32.00	15	2000-D	6
78+0	32.00	15	2000-D	6

Connector PIpe Summary

Station	RUN LENGTH	DIAMETER	CLASS	# OF JOINTS Required
				0
100+57	80.00	66	2000-D	11
80+87	32.00	15	2000-D	6
80+30	27.00	15	2000-D	5
86+74 Rt.	35.00	~~18~~ 15"	2000-D	5
86+74 Lt.	26.00	24	2000-D	4
87+5.5	38.00	24	2000-D	5
87+29	62.00	36	2000-D	9
88+18	33.00	15	2000-D	6
90+0	27.00	15	2000-D	5
94+95	34.00	15	2000-D	6
94+95	27.00	15	2000-D	5
99+75	26.00	15	2000-D	5
100+98	~~67.00~~ 61	24	2000-D	9
101+32	32.00	15	2000-D	6
101+32	28.00	15	2000-D	5
106+0 Rt	~~29.00~~ 32	15	2000-D	5
106+0 Lt	28.00	15	2000-D	5
112+93	33.00	15	2000-D	6
112+93	25.00	15	2000-D	5
116+8	23.00	15	2000-D	4
119+50 Rt.	41.00	15	2000-D	7
119+50 Lt	24.00	15	2000-D	4
126+45	34.00	15	2000-D	6
126+27	26.00	~~15~~ 24"	2000-D	5
127+69	38.00	24	2000-D	5
127+29	72.00	42	2000-D	10
128+5	33.00	15	2000-D	6
131+50	33.00	15	2000-D	6
128+15	27.00	15	2000-D	5
130+47	27.00	15	2000-D	5
117+79	23.00	15	2000-D	4
87+78	26.00	15	2000-D	5
83+52	27.00	15	2000-D	5
77+35	27.00	15	2000-D	5
75+20	32.00	15	2000-D	6
78+0	32.00	15	2000-D	6