FINAL DRAINAGE REPORT

DREAMING SUMMIT
UNIT 2B

AUGUST, 1999
DEA PROJECT NO. STAR0071

Outstanding Professionals . . .
Outstanding Quality

DAVID EVANS AND ASSOCIATES, INC.

FINAL DRAINAGE REPORT
FOR

DREAMING SUMMIT
UNIT 2B

PREPARED FOR

STARDUST DEVELOPMENT, INC.
6730 NORTH SCOTTSDALE ROAD, SUITE 230
SCOTTSDALE, AZ 85253
(602) 607-5800

PREPARED BY

SEAN KNOWLES, EIT
DAVID EVANS AND ASSOCIATES, INC.
7878 NORTH 16TH STREET, SUITE 250
PHOENIX, AZ 85020
(602) 678-5151

Registered Professional Engineer (Civil)
CERTIFICATE NO.
30013
TERI S.
MINTZ
Date Signed: 8/30/99
ARIZONA, U.S.A.

August, 1999
DEA PROJECT NO. STAR0071

TABLE OF CONTENTS

SECTION	TITLE	PAGE NO.
1.0	**INTRODUCTION**	1
2.0	**EXISTING DRAINAGE CONDITIONS**	1
3.0	**PROPOSED DRAINAGE CONCEPT**	2
3.1	ON-SITE DRAINAGE CONVEYANCE	2
3.2	OFF-SITE DRAINAGE CONVEYANCE	2
3.3	ON-SITE STORM WATER RETENTION	3
4.0	**HYDROLOGIC ANALYSIS**	4
5.0	**HYDRAULIC ANALYSIS**	6
6.0	**CONCLUSIONS**	10
7.0	**REFERENCES**	10

FIGURES	TITLE	LOCATION
1	Vicinity Map	Appendix A
2	Typical Street Sections	Appendix A
3	Typical Channel Sections	Appendix A
4	Weighted Runoff Coefficient	Appendix A

TABLES	TITLE	LOCATION
4.1	Summary of Peak Discharges	Section 4.0
5.1	Summary of Depths of Flows	Section 5.0
5.2	Summary of Inlet Sizes	Section 5.0

EXHIBITS	TITLE	LOCATION
A	On-site Drainage Area Map	Back Pocket

APPENDIX	TITLE
A	Figures
B	FEMA Flood Insurance Rate Map
C	Hydrologic Calculation and Data Sheets
D	Hydraulic Calculation and Data Sheets

Registered Professional Engineer (Civil)
CERTIFICATE NO.
30013
TERI S.
MINTZ
Date Signed 8-30-99
ARIZONA, U.S.A.

1.0 INTRODUCTION

This final drainage report has been prepared under a contract from Stardust Development, Inc., Owner/Developer of the Dreaming Summit project. The purpose of this report is to provide the hydrologic and hydraulic analyses, required by Maricopa County, to support the final plat submittal for Unit 2B. This report utilizes the master drainage plan developed for the overall project as presented in the *Master Drainage Report, Dreaming Summit* and the *Infrastructure Drainage Report, Dreaming Summit*. The study is currently in review with the Flood Control District of Maricopa County and cities adjacent to the project. Preparation of this report has been done according to the procedures detailed in the *Drainage Design Manual for Maricopa County, Arizona, Volumes I & II* (Reference Nos. 1 & 2).

The Dreaming Summit project site is located within Maricopa County, Arizona. The site is located within Sections 10 and 15, Township 2 North, Range 1 West of the Gila and Salt River Base and Meridian. The Unit 2B site is bounded by Litchfield Road to the west, Bethany Home Road to the north, and vacant land to the south and east. Figure 1, located in Appendix A, illustrates the location of the project site in relation to Maricopa County street system. Access to the site will be provided by Litchfield Road and Bethany Home Road.

The Dreaming Summit Unit 2B project is a proposed single family subdivision of approximately 140.5 acres that contains 436 lots for an average density of 3.10 lots per acre. Improvements to be made on-site will include full roadway sections with asphalt pavement, rolled and vertical curbing, gutter and sidewalks, and graded building pads. Exhibit A, located in the back pocket, illustrates in concept, the proposed improvements for the project.

2.0 EXISTING DRAINAGE CONDITIONS

The proposed site is located on an undeveloped parcel that has historically been used for runoff detention. Approximately one-sixth of Unit 2B has been previously graded to provide for a large detention basin, the Litchfield Park Detention Facility, changing the historic flow patterns slightly. Before the construction of the detention basin, two major washes cut across the site from the northwest to the south.

The Litchfield Park Detention Facility is located roughly in the center of the Dreaming Summit project. It serves as a regional detention basin, collecting runoff from the north and releasing it via a 42" bleedoff pipe located at the southeast corner of the basin where the flow is conveyed to the Colter Channel.

A dip section on Litchfield Road is located 1600 feet south of Bethany Home Road. Using the White Tanks/Agua Fria ADMS, it has been determined that 165 cfs can enter the site at this location. This dip section is discussed in more detail in the *Infrastructure Drainage Report*.

The current FEMA Flood Insurance Rate Map (FIRM) for this area, map number 04013C1615H (effective date September 30, 1995) shows most of the project site is in a flood hazard Zone X. Zone X is defined as "*Areas of 500-year flood; areas of 100-year flood with average depths of less than one foot or with drainage areas less than one square mile; and areas protected by levees from 100-year flood.*" The remainder of the site is located in a flood hazard Zone AE. Zone AE is defined as *"Base flood elevations determined."* The AE Zone was delineated as part of the White Tanks/Agua Fria ADMS. A copy of the current FIRM panel is provided on Appendix B.

3.0 PROPOSED DRAINAGE CONCEPT

The proposed drainage concept is presented in three parts: on-site drainage conveyance, off-site drainage conveyance, and on-site storm water retention. The hydrologic analysis is summarized in section 4.0 and the hydraulic analysis is summarized in section 5.0. On-site storm water retention calculations are in section 3.3. See Exhibit A in the back pocket for a graphical illustration of the proposed drainage concept.

3.1 On-site Drainage Conveyance

On-site storm water runoff is conveyed through the site by the paved roadway sections that have normal crown sections and either 4-inch roll or 6-inch vertical curb. Lots are graded to drain into the roadway on which they front. Typical street sections are shown in Figure 2, located in Appendix A. Runoff generated within portions of the project site is conveyed into the regional detention basin, adding to the runoff volume currently entering the basin from the north and west. Runoff from the remaining area combines with off-site flow from the west and is conveyed in a channel which ultimately discharges into the Colter Channel. In the future, this volume will be retained within Unit 3.

The roadway sections are designed to convey the 10-year peak flows between the curbs and the 100-year peak flows between property lines. Catch basins and scuppers are used to direct the flows from the street into the retention basins.

3.2 Off-site Drainage Conveyance

As described in the *Infrastructure Drainage Report*, off-site runoff from the west is conveyed across Litchfield Road in a dip section. This runoff is collected into a drainage channel and conveyed east through the site. This runoff joins the bleedoff from the Litchfield Detention Basin and flows south in an existing wash to the Colter Channel.

3.3 On-site Storm Water Retention

The County requires that all runoff from the 100-year, 2-hour event generated from the project site and half streets adjacent to the site be retained within the project site. The required retention volume for the project site is estimated as follows:

$V_R = C*(P/12)*A$

Where:

V_R = Estimated volume in cubic feet

C_{wt} = Weighted runoff coefficient (0.95 - Street)
(0.66 - Residential [Figure 4 in Appendix A])
(0.25 - Open Space)

P = 100-year, 2-hour depth of rainfall in inches (2.65 in)

A = Drainage area in acres (62.72 - Residential)

$V_{R\text{-}Res} = 0.66 * (2.65/12) * 62.78 = 9.15$ ac-ft

The amount of required retention in the Litchfield Detention Basin for this project is 9.15 ac-ft. In addition to this volume, the Litchfield Detention Basin will be storing 5.72 ac-ft from the Infrastructure of Dreaming Summit and 10.96 ac-ft from Unit 2A (Reference No. 7). These volumes will be set aside and retained when the Infrastructure and Unit 2A are developed.

A portion of the volume required for Unit 2B, specifically the southwest corner, is not retained within the Litchfield Detention Basin due to grading constraints and its proximity to the regional detention basin. That required volume will be provided in a temporary retention basin within Unit 3. There will be no mixing of off-site flow and on-site runoff; therefore, the temporary basin will intercept runoff generated south of the Litchfield Detention Basin. The ponding depth in this temporary basin will not exceed one foot. The retention for this part of Unit 2B will be discussed further in the Final Drainage Report for Unit 3, however 5.72 ac-ft of volume will be set aside and retained when Unit 3 is developed. The calculation for this retention is shown below.

A = Drainage area in acres (2.73 - Street)
(36.02 - Residential)
(3.61 - Open Space)

$V_{R\text{-}Street} = 0.95 * (2.65/12) * 1.41 = 0.30$ ac-ft

$V_{R\text{-}Res} = 0.66 * (2.65/12) * 35.83 = 5.22$ ac-ft

$V_{R\text{-}OS} = 0.25 * (2.65/12) * 3.61 = 0.20$ ac-ft

$V_{R\text{-}Total} = 0.30 + 5.22 + 0.20 = 5.72$ ac-ft

4.0 HYDROLOGIC ANALYSIS

The hydrologic analysis for this study has been done using the County's *Drainage Design Manual, Volume I.* Peak flows for the site were computed using the Rational Method program from Maricopa County. The following establishes the Rational Method equation and the basic input data required:

$$Q = CIA$$

Where:

Q = Peak Flow (cfs)
C = runoff coefficient relating runoff to rainfall
A = the contributing drainage area in acres (from Exhibit A)
T_c = Time of Concentration (min.)

A summary of peak flows for the 10-year (Q_{10}), 50-year (Q_{50}) and 100-year (Q_{100})storm events is shown below in Table 4.1. Appendix C contains the detailed calculation sheets that establish the input data and estimated peak flow values for on-site drainage areas.

Summary of Peak Discharges
Table 4.1

Sub-basin Designation	Q_{10} (cfs)	Q_{50} (cfs)	Q_{100} (cfs)	Sub-basin Designation	Q_{10} (cfs)	Q_{50} (cfs)	Q_{100} (cfs)
7	5	9	11	20F	21	38	46
8A	9	15	19	20G	30	54	65
8B	17	29	35	20H	28	49	59
8C	19	33	40	24A*	15	26	31
8D	16	29	35	24A	17	30	36
8E	9	15	19	24B*	19	33	40
8F	19	33	40	24B	36	63	76
8G	54	96	116	24C*	4	7	8
9A	9	16	19	24C**	14	23	28
9B	10	18	22	24C	49	88	106
20A	16	27	32	24D*	18	32	38
20B	11	19	23	24D	19	33	40
20C	29	50	61	25	7	12	14
20D	9	16	19	26	3	4	5
20E	12	20	24	27	5	9	10

5.0 HYDRAULIC ANALYSIS

The hydraulic analyses of the proposed storm water management facilities have been completed according to County's *Drainage Design Manual, Volume II, Hydraulics.* Haestad Method's FlowMaster computer program (Reference No. 3) was utilized to determine the depth of flow within the roadway for the 10- and 100-year storm events. The depth of flow for the 10-year peak discharge is contained within the curbs and the 100-year peak discharge is contained within the property lines. Storm drains are incorporated into the drainage design where flow depths exceed these guidelines. A summary of the depth of flow for the 10- and 100-year storms is shown below in Table 5.1.

Summary of Depths of Flow
Table 5.1

Concentration Point Designation	d_{10} (ft)	d_{100} (ft)	Sub-basin Designation	d_{10} (ft)	d_{100} (ft)
7▪	0.25	0.33	20F	0.46	0.63
8A▪	0.33	0.42	20G	0.45	0.66
8B▪	0.33	0.42	20H	0.32	0.50
8C	0.42	0.57	24A*▪	0.31	0.39
8D▪	0.33	0.42	24A	0.41	0.54
8E▪	0.33	0.43	24B*▪	0.33	0.43
8F	0.35	0.45	24B	0.47	0.67
8G	0.42	0.66	24C*▪	0.21	0.27
9A▪	0.33	0.42	24C**▪	0.28	0.35
9B	0.34	0.46	24C	0.40	0.65
20A▪	0.31	0.39	24D*▪	0.31	0.40
20B▪	0.28	0.36	24D	0.35	0.46
20C	0.39	0.52	25	0.27	0.35
20D▪	0.26	0.34	26	0.22	0.26
20E▪	0.29	0.37	27	0.25	0.33

▪ 4" roll curb

Catch basins and scuppers are used to convey the runoff into Litchfield Detention Basin and the drainage channel. The catch basins are designed using the interceptions rates calculated with the HEC-12 computer software program (Reference No. 4). The catch basin computations utilize a 25% clogging factor for the inlets. The design is based on the 10-year storm event. A weir calculation is used to determine the 100-year water surface elevations where runoff overtops the curb and spills into the drainage swale. The HEC-12 computation sheets, weir calculation sheet and drainage swale design are located in Appendix D. A summary of inlet sizes and water surface elevations is shown below in Table 5.2.

Summary of Inlet Sizes
Table 5.2

Catch basin Designation	Inlet Size	$d_{10}/WSEL_{10}$	$d_{100}/WSEL_{100}$
8BN & 8BS	3' wings	0.37/69.83	0.47/69.93
8CW & 8CE	Double wings (17',10') wings	0.46/69.25	0.59/69.38
8FN	17' wing	0.39/70.10	0.50/70.21
8FS	17' wing	0.39/70.02	0.50/70.13
8GW & 8GE	Double 10' wings*	0.37/68.12	0.69/68.44
9BN	17' wing*	0.37/67.25	0.48/67.36
9BS	17' wing*	0.37/67.24	0.48/67.35
20CN & 20CS	17' wings	0.43/70.25	0.55/70.37
20FW	6' wing	0.50/69.33	0.64/69.47
20FE	6' wing	0.50/69.30	0.64/69.44
20GN & 20GS	Double 17' wings	0.49/68.56	0.66/68.73
20HW & 20HE	Double 17' wings*	0.30/68.04	0.53/68.27
24AW	10' wing	0.43/69.10	0.55/69.22
24AE	10' wing	0.43/68.84	0.55/68.96
24BW	17' wing	0.48/67.71	0.65/67.88
24BE	17' wing	0.48/67.75	0.65/67.92
24CW	17' wing*	0.50/66.40	0.67/66.57
24CE	Double 17' wings*	0.35/66.25	0.67/66.77
25	12' scupper*	0.42/83.59	0.58/83.75
26	4' scupper*	0.41/79.18	0.63/79.40

* indicates a sump condition

The HEC-12 program uses a 2" depression at the curb openings in a sump condition to calculate the depth of flow. The 10-year and 100-year water surface elevations (WSEL) were calculated by subtracting 2" from the calculated depth of flow and adding the difference to the gutter elevation.

StormCAD 1.5 (Reference No. 5) is utilized to size the storm drain pipes which convey water into Litchfield Detention Basin and the drainage channel. Pipes are designed to convey the 10-year storm event with no hydraulic grade lines (HGL) above ground and the 100-year storm event with no adverse effect on the surrounding finished floors. The StormCAD calculations are located in Appendix D.

FlowMaster 6.0 was utilized to perform a Manning's analysis to design the channel conveying flow from the dip section on Litchfield Road. The peak discharge at this point is 165 cfs. Calculations show that a channel with a 10-foot bottom and 4:1 side slopes can convey the flow at approximately 1.58 feet of depth. Figure 3, located in Appendix A, shows the typical cross section for the channel. CulvertMaster 1.0 (Reference No. 6) is utilized to design the culvert conveying this runoff beneath a residential street. The resulting headwater elevation does not affect the surrounding streets and finished floors. In order to prevent erosion near the headwall, gunite is placed around the side slopes. Hydraulic calculations for this channel and culvert are located in Appendix D.

6.0 CONCLUSIONS

Based on the results of this study, it can be concluded that:

- The site can be developed according to the guidelines set in the *Drainage Design Manuals for Maricopa County*.
- The 10-year event is contained within the roadway and the 100-year event is contained within the property lines
- All finished floor elevations are set above the 100-year water surface elevation

7.0 REFERENCES

1) *Drainage Design Manual for Maricopa County, Arizona, Volume I, Hydrology*, 1992.
2) *Drainage Design Manual for Maricopa County, Arizona, Volume II, Hydraulics*, 1991.
3) FlowMaster for Windows Professional Edition, Version 6.0, Haestad Methods, 1999.
4) *SMF Pavement Drainage Program, HEC-12*, Version 2.11, 1991.
5) StormCAD v1.5, Haestad Methods, 1997.
6) CulvertMaster v1.0, Haestad Methods, 1995.
7) *Final Drainage Report for Unit 2A*, David Evans and Associates, Inc., 1999.

APPENDIX A
FIGURES

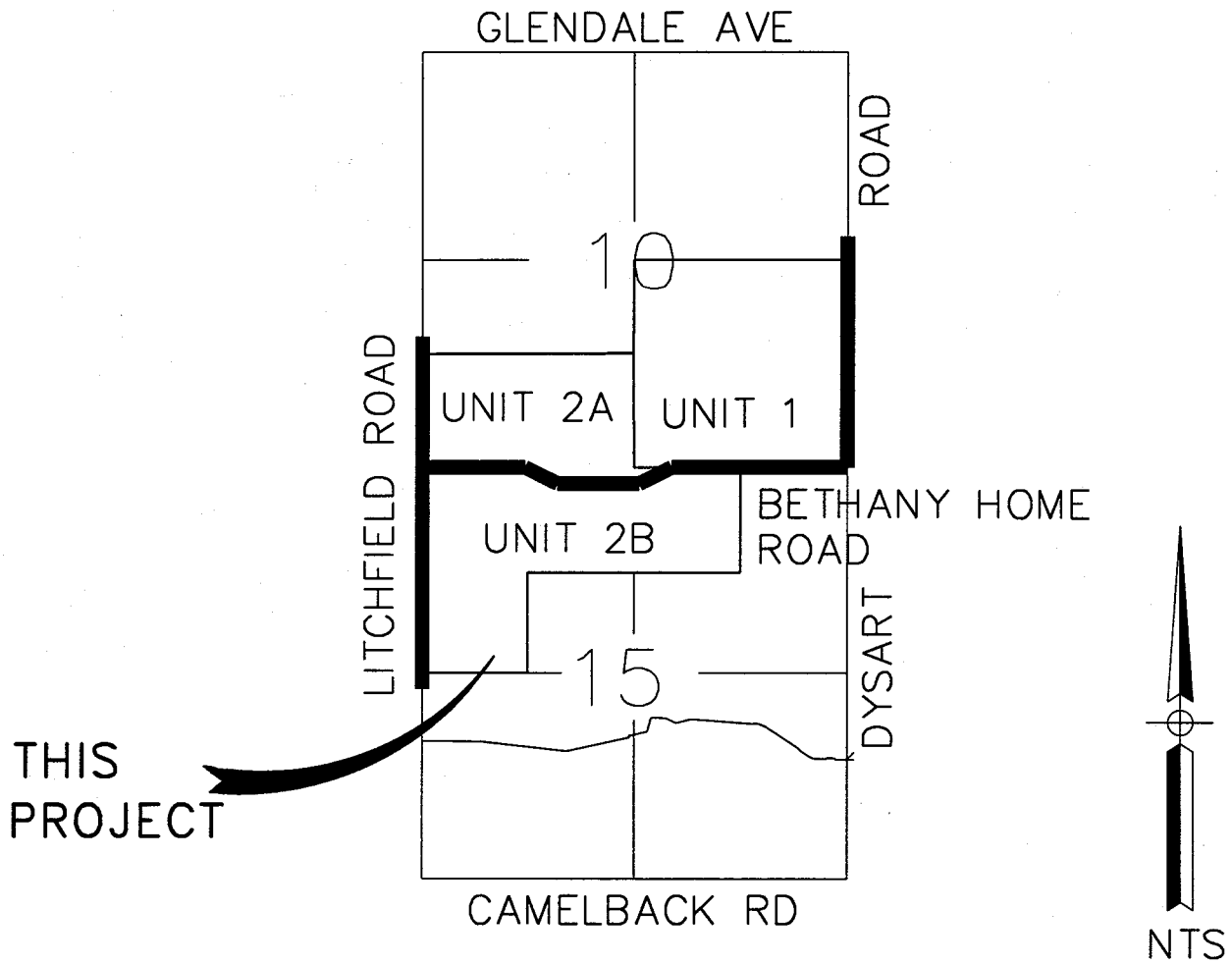

VICINITY MAP

FIGURE 1

STAR0071 sck 08/27/99 12:49:51 sck S:\DRN\STAR0071\CAD\UNIT2B\Un2bfig1.dwg

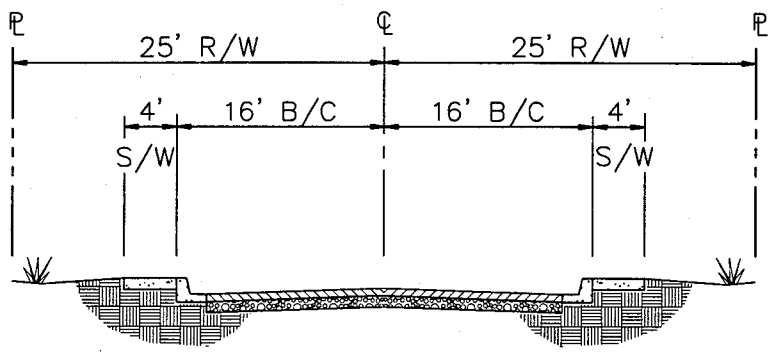

TYPICAL INTERIOR STREET

NTS

FIGURE 2

STAR0071 sck 08/27/99 12:41:08 sck S:\DRN\STAR0071\CAD\UNIT2B\Un2bfig2.dwg

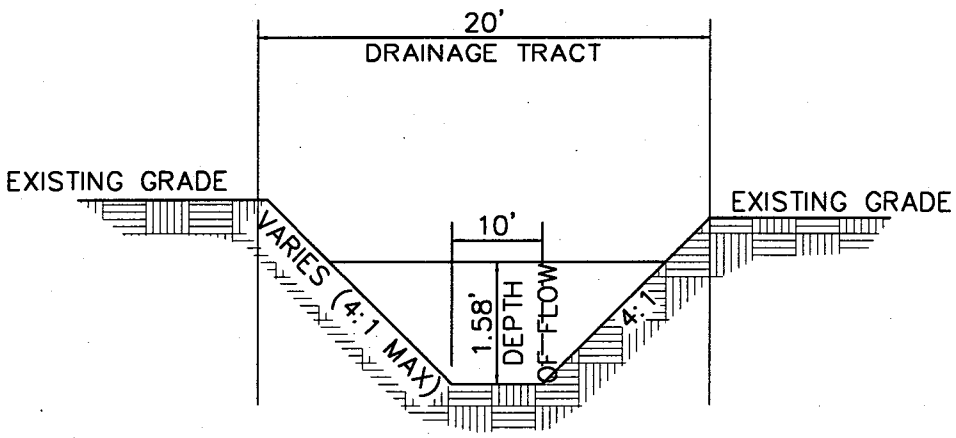

OFF-SITE CONVEYANCE CHANNEL

(NOT TO SCALE)

TYPICAL CHANNEL SECTION
FIGURE 3

CHPV0003 sck 08/30/99 11:02:21 sck S:\DRN\STAR0071\CAD\UNIT2B\Un2bfig3.dwg

DREAMING SUMMIT
UNIT 2B
STAR0071
SCK - 8/99

WEIGHTED RUNOFF COEFFICIENT (Cw)

100-YEAR STORM EVENT

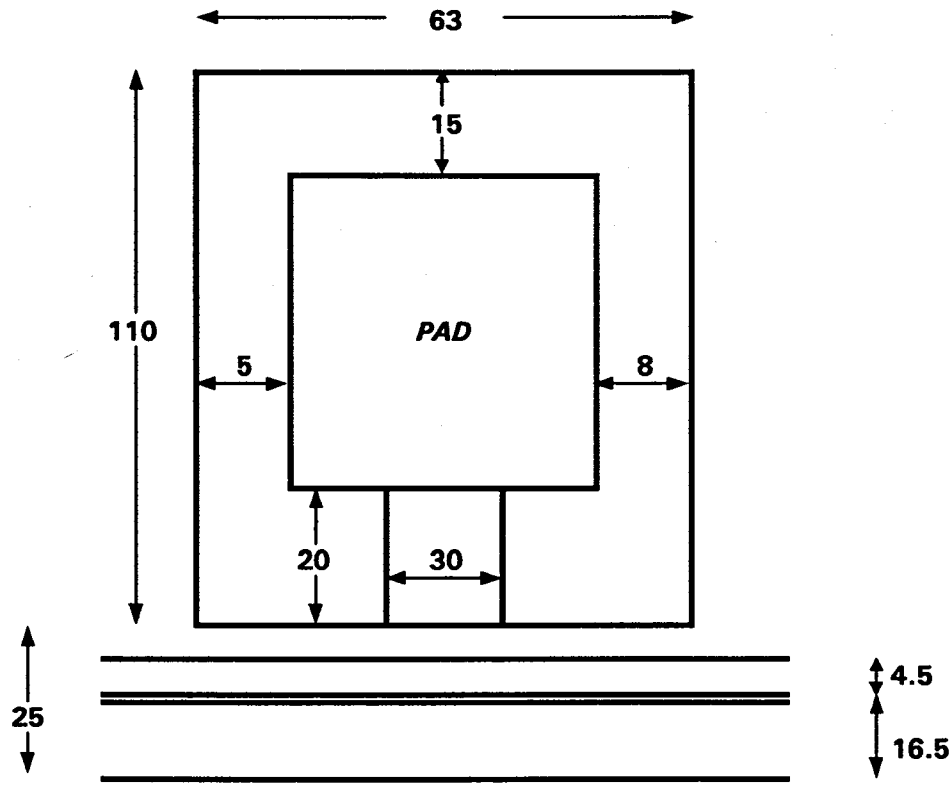

HALF R/W TOTAL	25	X	63	=	1575 S.F.		
CONCRETE	4.5	X	63	=	283.5 S.F.	@	0.95
ASPHALT	16.5	X	63	=	1040 S.F.	@	0.85
RIGHT-OF-WAY (50/50)	4	X	63	=	252 S.F.	@	0.45
LOT AREA TOTAL	63	X	110	=	6930 S.F.		
ROOF (33% OF LOT)				=	2287 S.F.	@	0.85
YARD (50/50)				=	4089 S.F.	@	0.45
CONCRETE (8% OF LOT)				=	554 S.F.	@	0.95

$$Cw = \frac{(284*0.95)+(1040*0.85)+(252*0.45)+(2287*0.85)+(4089*0.45)+(554*0.90)}{8505}$$

Cw = 0.66

FIGURE 4

s:\drn\star0071\calcs\unit2b\coeffcnt.xls

APPENDIX B
FEMA FLOOD INSURANCE RATE MAP

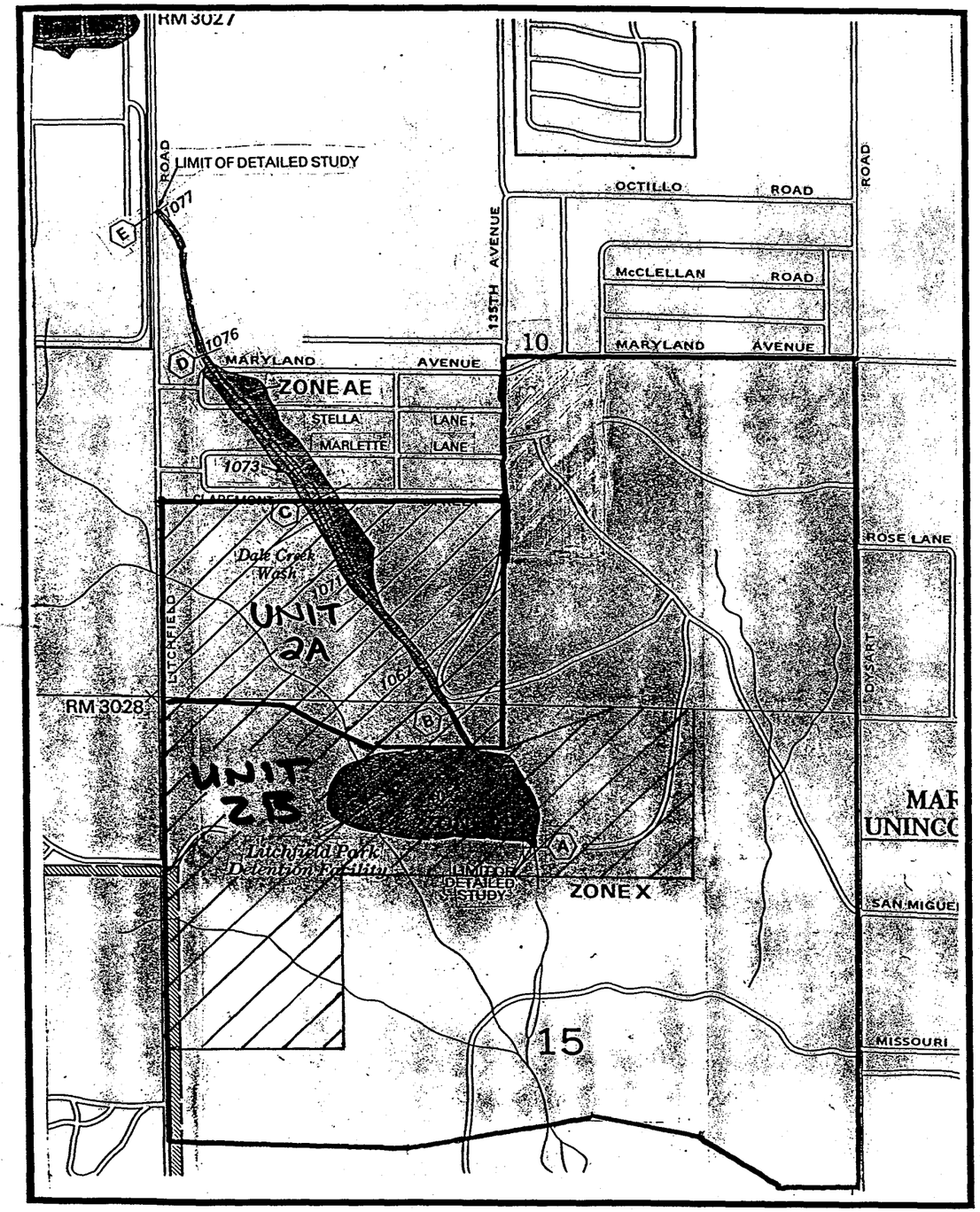

PORTION OF PANEL SHOWING SITE

LEGEND

SPECIAL FLOOD HAZARD AREAS INUNDATED BY 100-YEAR FLOOD

ZONE A	No base flood elevations determined.
ZONE AE	Base flood elevations determined.
ZONE AH	Flood depths of 1 to 3 feet (usually areas of ponding); base flood elevations determined.
ZONE AO	Flood depths of 1 to 3 feet (usually sheet flow on sloping terrain); average depths determined. For areas of alluvial fan flooding, velocities also determined.
ZONE A99	To be protected from 100-year flood by Federal flood protection system under construction; no base elevations determined.
ZONE V	Coastal flood with velocity hazard (wave action); no base flood elevations determined.
ZONE VE	Coastal flood with velocity hazard (wave action); base flood elevations determined.

FLOODWAY AREAS IN ZONE AE

OTHER FLOOD AREAS

ZONE X	Areas of 500-year flood; areas of 100-year flood with average depths of less than 1 foot or with drainage areas less than 1 square mile; and areas protected by levees from 100-year flood.

OTHER AREAS

ZONE X	Areas determined to be outside 500-year flood plain.
ZONE D	Areas in which flood hazards are undetermined.

Flood Boundary

Floodway Boundary

Zone D Boundary

Boundary Dividing Special Flood Hazard Zones, and Boundary Dividing Areas of Different Coastal Base Flood Elevations Within Special Flood Hazard Zones.

513 — Base Flood Elevation Line; Elevation in Feet*

D — D Cross Section Line

(EL 987) — Base Flood Elevation in Feet Where Uniform Within Zone*

$RM7_X$ — Elevation Reference Mark

*Referenced to the National Geodetic Vertical Datum of 1929

APPROXIMATE SCALE IN FEET

1000 0 1000

MAP LEGEND

NATIONAL FLOOD INSURANCE PROGRAM

FIRM
FLOOD INSURANCE RATE MAP

MARICOPA COUNTY, ARIZONA AND INCORPORATED AREAS

PANEL 1615 OF 4350

CONTAINS:

COMMUNITY	NUMBER	PANEL	SUFFIX
AVONDALE, CITY OF	040038	1615	H
EL MIRAGE, TOWN OF	040041	1615	H
GLENDALE, CITY OF	040045	1615	H
GOODYEAR, TOWN OF	040046	1615	H
LITCHFIELD PARK, CITY OF	040128	1615	H
MARICOPA COUNTY UNINCORPORATED AREAS	040037	1615	H
PHOENIX, CITY OF	040051	1615	H

MAP NUMBER 04013C1615 H

MAP REVISED: SEPTEMBER 30, 1995

Federal Emergency Management Agency

FIRM PANEL

APPENDIX C
HYDROLOGIC CALCULATIONS

Flood Control District of Maricopa County
Hydrologic Design Manual Rational Method

Computed by: TJCL Date: 8-12-99

LOCATION DATA

Location: CP7

Project Name: DREAMING SUMMIT Subarea id: 7

Drainage Area Cover: RESIDENTIAL

DESIGN DATA

Drainage Area	1.85	acres
Watercourse Length	364.0	feet
Top Elevation	76.1	feet
Bottom Elevation	73.4	feet
Slope	.00747	feet/feet
Roughness Coefficient (Kb)	.03833	
10-Year, 6-Hour Rainfall	2.00	inches

Hydrological Summary Table

Parameter	2-Yr	5-Yr	10-Yr	25-Yr	50-Yr	100-Yr
Q (cfs)	3	4	5	7	9	11
C	0.528	0.528	0.528	0.581	0.634	0.660
Tc (min)	6.7	5.9	5.5	5.1	5.0	5.0
i (in/hr)	3.4	4.6	5.5	6.7	7.7	8.7

Flood Control District of Maricopa County
Hydrologic Design Manual Rational Method

Computed by: TJCL Date: 8-2-99

LOCATION DATA

Location: CP8A

Project Name: DREAMING SUMMIT Subarea id: 8A

Drainage Area Cover: RESIDENTIAL

DESIGN DATA

Drainage Area	3.75	acres
Watercourse Length	680.0	feet
Top Elevation	76.8	feet
Bottom Elevation	73.8	feet
Slope	.00441	feet/feet
Roughness Coefficient (Kb)	.03641	
10-Year, 6-Hour Rainfall	2.00	inches

Hydrological Summary Table

Parameter	2-Yr	5-Yr	10-Yr	25-Yr	50-Yr	100-Yr
Q (cfs)	5	7	9	12	15	19
C	0.528	0.528	0.528	0.581	0.634	0.660
Tc (min)	11.3	10.0	9.4	8.5	8.1	7.7
i (in/hr)	2.7	3.7	4.4	5.7	6.5	7.5

Flood Control District of Maricopa County
Hydrologic Design Manual Rational Method

Computed by: TJCL Date: 8-2-99

LOCATION DATA

Location: CP8B

Project Name: DREAMING SUMMIT Subarea id: 8B

Drainage Area Cover: RESIDENTIAL

DESIGN DATA

Drainage Area	6.60	acres
Watercourse Length	871.0	feet
Top Elevation	77.0	feet
Bottom Elevation	67.9	feet
Slope	.01045	feet/feet
Roughness Coefficient (Kb)	.03488	
10-Year, 6-Hour Rainfall	2.00	inches

Hydrological Summary Table

Parameter	2-Yr	5-Yr	10-Yr	25-Yr	50-Yr	100-Yr
Q (cfs)	10	14	17	23	29	35
C	0.528	0.528	0.528	0.581	0.634	0.660
Tc (min)	9.3	8.2	7.7	7.1	6.7	6.3
i (in/hr)	2.9	4.1	4.8	6.1	7.0	8.0

Flood Control District of Maricopa County
Hydrologic Design Manual Rational Method

Computed by: TJCL Date: 8-2-99

LOCATION DATA

Location: CP8C

Project Name: DREAMING SUMMIT Subarea id: 8C

Drainage Area Cover: RESIDENTIAL

DESIGN DATA

Drainage Area	9.92	acres
Watercourse Length	1753.0	feet
Top Elevation	76.8	feet
Bottom Elevation	68.7	feet
Slope	.00462	feet/feet
Roughness Coefficient (Kb)	.03378	
10-Year, 6-Hour Rainfall	2.00	inches

Hydrological Summary Table

Parameter	2-Yr	5-Yr	10-Yr	25-Yr	50-Yr	100-Yr
Q (cfs)	11	15	19	26	33	40
C	0.528	0.528	0.528	0.581	0.634	0.660
Tc (min)	18.9	16.7	15.6	14.1	13.4	12.6
i (in/hr)	2.1	3.0	3.5	4.6	5.3	6.1

Flood Control District of Maricopa County
Hydrologic Design Manual Rational Method

Computed by: TJCL Date: 8-3-99

LOCATION DATA

Location: CP8D

Project Name: DREAMING SUMMIT Subarea id: 8D

Drainage Area Cover: RESIDENTIAL

DESIGN DATA

Drainage Area	7.03	acres
Watercourse Length	1164.0	feet
Top Elevation	81.6	feet
Bottom Elevation	70.6	feet
Slope	.00945	feet/feet
Roughness Coefficient (Kb)	.03471	
10-Year, 6-Hour Rainfall	2.00	inches

Hydrological Summary Table

Parameter	2-Yr	5-Yr	10-Yr	25-Yr	50-Yr	100-Yr
Q (cfs)	10	14	16	23	29	35
C	0.528	0.528	0.528	0.581	0.634	0.660
Tc (min)	11.4	10.1	9.5	8.6	8.2	7.8
i (in/hr)	2.7	3.7	4.4	5.7	6.5	7.5

Flood Control District of Maricopa County
Hydrologic Design Manual Rational Method

Computed by: TJCL Date: 8-3-99

LOCATION DATA

Location: CP8E

Project Name: DREAMING SUMMIT Subarea id: 8E

Drainage Area Cover: RESIDENTIAL

DESIGN DATA

Drainage Area	3.61	acres
Watercourse Length	516.0	feet
Top Elevation	70.5	feet
Bottom Elevation	68.5	feet
Slope	.00388	feet/feet
Roughness Coefficient (Kb)	.03652	
10-Year, 6-Hour Rainfall	2.00	inches

Hydrological Summary Table

Parameter	2-Yr	5-Yr	10-Yr	25-Yr	50-Yr	100-Yr
Q (cfs)	5	7	9	12	15	19
C	0.528	0.528	0.528	0.581	0.634	0.660
Tc (min)	10.1	8.9	8.4	7.6	7.3	6.9
i (in/hr)	2.8	3.9	4.7	5.9	6.8	7.8

Flood Control District of Maricopa County
Hydrologic Design Manual Rational Method

Computed by: TJCL Date: 8-3-99

LOCATION DATA

Location: CP8F

Project Name: DREAMING SUMMIT Subarea id: 8F

Drainage Area Cover: RESIDENTIAL

DESIGN DATA

Drainage Area	8.28	acres
Watercourse Length	1381.0	feet
Top Elevation	81.6	feet
Bottom Elevation	67.9	feet
Slope	.00992	feet/feet
Roughness Coefficient (Kb)	.03427	
10-Year, 6-Hour Rainfall	2.00	inches

Hydrological Summary Table

Parameter	2-Yr	5-Yr	10-Yr	25-Yr	50-Yr	100-Yr
Q (cfs)	11	16	19	26	33	40
C	0.528	0.528	0.528	0.581	0.634	0.660
Tc (min)	12.4	10.9	10.2	9.3	8.8	8.4
i (in/hr)	2.6	3.6	4.3	5.5	6.3	7.2

Flood Control District of Maricopa County
Hydrologic Design Manual Rational Method

Computed by: TJCL Date: 8-4-99

LOCATION DATA

Location: CP8G

Project Name: DREAMING SUMMIT Subarea id: 8G

Drainage Area Cover: RESIDENTIAL

DESIGN DATA

Drainage Area	29.22	acres
Watercourse Length	2005.0	feet
Top Elevation	76.8	feet
Bottom Elevation	67.8	feet
Slope	.00449	feet/feet
Roughness Coefficient (Kb)	.03085	
10-Year, 6-Hour Rainfall	2.00	inches

Hydrological Summary Table

Parameter	2-Yr	5-Yr	10-Yr	25-Yr	50-Yr	100-Yr
Q (cfs)	32	45	54	76	96	116
C	0.528	0.528	0.528	0.581	0.634	0.660
Tc (min)	19.6	17.3	16.1	14.6	13.8	13.1
i (in/hr)	2.1	2.9	3.5	4.5	5.2	6.0

Flood Control District of Maricopa County
Hydrologic Design Manual Rational Method

Computed by: TJCL Date: 8-4-99

LOCATION DATA

Location: CP9A

Project Name: DREAMING SUMMIT Subarea id: 9A

Drainage Area Cover: RESIDENTIAL

DESIGN DATA

Drainage Area	5.09	acres
Watercourse Length	901.0	feet
Top Elevation	68.1	feet
Bottom Elevation	67.1	feet
Slope	.00111	feet/feet
Roughness Coefficient (Kb)	.03559	
10-Year, 6-Hour Rainfall	2.00	inches

Hydrological Summary Table

Parameter	2-Yr	5-Yr	10-Yr	25-Yr	50-Yr	100-Yr
Q (cfs)	5	7	9	12	16	19
C	0.528	0.528	0.528	0.581	0.634	0.660
Tc (min)	22.6	19.7	18.4	16.7	15.8	14.9
i (in/hr)	1.9	2.7	3.3	4.2	4.9	5.7

Flood Control District of Maricopa County
Hydrologic Design Manual Rational Method

Computed by: TJCL Date: 8-4-99

LOCATION DATA

Location: CP9B

Project Name: DREAMING SUMMIT Subarea id: 9B

Drainage Area Cover: RESIDENTIAL

DESIGN DATA

Drainage Area	5.80	acres
Watercourse Length	1007.0	feet
Top Elevation	68.1	feet
Bottom Elevation	66.7	feet
Slope	.00139	feet/feet
Roughness Coefficient (Kb)	.03523	
10-Year, 6-Hour Rainfall	2.00	inches

Hydrological Summary Table

Parameter	2-Yr	5-Yr	10-Yr	25-Yr	50-Yr	100-Yr
Q (cfs)	6	8	10	14	18	22
C	0.528	0.528	0.528	0.581	0.634	0.660
Tc (min)	22.0	19.3	18.0	16.3	15.4	14.5
i (in/hr)	1.9	2.7	3.3	4.2	5.0	5.8

Flood Control District of Maricopa County
Hydrologic Design Manual Rational Method

Computed by: TJCL Date: 8-12-99

LOCATION DATA

Location: CP20A

Project Name: DREAMING SUMMIT Subarea id: 20A

Drainage Area Cover: RESIDENTIAL

DESIGN DATA

Drainage Area	5.87	acres
Watercourse Length	1001.8	feet
Top Elevation	89.2	feet
Bottom Elevation	70.8	feet
Slope	.01834	feet/feet
Roughness Coefficient (Kb)	.03520	
10-Year, 6-Hour Rainfall	2.00	inches

Hydrological Summary Table

Parameter	2-Yr	5-Yr	10-Yr	25-Yr	50-Yr	100-Yr
Q (cfs)	10	13	16	21	27	32
C	0.528	0.528	0.528	0.581	0.634	0.660
Tc (min)	8.2	7.3	6.8	6.3	6.0	5.7
i (in/hr)	3.1	4.2	5.1	6.3	7.2	8.3

Flood Control District of Maricopa County
Hydrologic Design Manual Rational Method

Computed by: TJCL Date: 8-26-99

LOCATION DATA

Location: CP20B

Project Name: DREAMING SUMMIT Subarea id: 20B

Drainage Area Cover: RESIDENTIAL

DESIGN DATA

Drainage Area	4.38	acres
Watercourse Length	733.0	feet
Top Elevation	78.9	feet
Bottom Elevation	72.4	feet
Slope	.00887	feet/feet
Roughness Coefficient (Kb)	.03599	
10-Year, 6-Hour Rainfall	2.00	inches

Hydrological Summary Table

Parameter	2-Yr	5-Yr	10-Yr	25-Yr	50-Yr	100-Yr
Q (cfs)	7	9	11	16	19	23
C	0.528	0.528	0.528	0.581	0.634	0.660
Tc (min)	9.1	8.0	7.5	6.9	6.5	6.2
i (in/hr)	3.0	4.1	4.9	6.1	7.0	8.1

Flood Control District of Maricopa County
Hydrologic Design Manual Rational Method

Computed by: TJCL Date: 8-27-99

LOCATION DATA

Location: CP20C

Project Name: DREAMING SUMMIT Subarea id: 20C

Drainage Area Cover: RESIDENTIAL

DESIGN DATA

Drainage Area	12.48	acres
Watercourse Length	1188.0	feet
Top Elevation	78.9	feet
Bottom Elevation	69.1	feet
Slope	.00825	feet/feet
Roughness Coefficient (Kb)	.03315	
10-Year, 6-Hour Rainfall	2.00	inches

Hydrological Summary Table

Parameter	2-Yr	5-Yr	10-Yr	25-Yr	50-Yr	100-Yr
Q (cfs)	17	24	29	40	50	61
C	0.528	0.528	0.528	0.581	0.634	0.660
Tc (min)	11.8	10.5	9.8	8.9	8.5	8.0
i (in/hr)	2.6	3.7	4.4	5.6	6.4	7.4

Flood Control District of Maricopa County
Hydrologic Design Manual Rational Method

Computed by: TJCL Date: 8-12-99

LOCATION DATA

Location: CP20D

Project Name: DREAMING SUMMIT Subarea id: 20D

Drainage Area Cover: RESIDENTIAL

DESIGN DATA

Drainage Area	3.46	acres
Watercourse Length	964.0	feet
Top Elevation	88.1	feet
Bottom Elevation	71.2	feet
Slope	.01753	feet/feet
Roughness Coefficient (Kb)	.03663	
10-Year, 6-Hour Rainfall	2.00	inches

Hydrological Summary Table

Parameter	2-Yr	5-Yr	10-Yr	25-Yr	50-Yr	100-Yr
Q (cfs)	6	8	9	13	16	19
C	0.528	0.528	0.528	0.581	0.634	0.660
Tc (min)	8.4	7.4	7.0	6.4	6.1	5.8
i (in/hr)	3.1	4.2	5.0	6.3	7.2	8.3

Flood Control District of Maricopa County
Hydrologic Design Manual Rational Method

Computed by: TJCL Date: 8-12-99

LOCATION DATA

Location: CP20E

Project Name: DREAMING SUMMIT Subarea id: 20E

Drainage Area Cover: RESIDENTIAL

DESIGN DATA

Drainage Area	4.16	acres
Watercourse Length	722.0	feet
Top Elevation	81.5	feet
Bottom Elevation	68.4	feet
Slope	.01820	feet/feet
Roughness Coefficient (Kb)	.03613	
10-Year, 6-Hour Rainfall	2.00	inches

Hydrological Summary Table

Parameter	2-Yr	5-Yr	10-Yr	25-Yr	50-Yr	100-Yr
Q (cfs)	7	10	12	16	20	24
C	0.528	0.528	0.528	0.581	0.634	0.660
Tc (min)	6.9	6.2	5.8	5.3	5.0	5.0
i (in/hr)	3.3	4.5	5.4	6.6	7.7	8.7

Flood Control District of Maricopa County
Hydrologic Design Manual Rational Method

Computed by: TJCL Date: 8-12-99

LOCATION DATA

Location: CP20F

Project Name: DREAMING SUMMMI Subarea id: 20F

Drainage Area Cover: RESIDENTIAL

DESIGN DATA

Drainage Area	10.40	acres
Watercourse Length	1754.0	feet
Top Elevation	81.5	feet
Bottom Elevation	67.9	feet
Slope	.00774	feet/feet
Roughness Coefficient (Kb)	.03365	
10-Year, 6-Hour Rainfall	2.00	inches

Hydrological Summary Table

Parameter	2-Yr	5-Yr	10-Yr	25-Yr	50-Yr	100-Yr
Q (cfs)	13	18	21	30	38	46
C	0.528	0.528	0.528	0.581	0.634	0.660
Tc (min)	15.5	13.7	12.8	11.6	11.0	10.4
i (in/hr)	2.3	3.2	3.9	5.0	5.7	6.6

Flood Control District of Maricopa County
Hydrologic Design Manual Rational Method

Computed by: TJCL Date: 8-12-99

LOCATION DATA

Location: CP20G

Project Name: DREAMING SUMMIT Subarea id: 20G

Drainage Area Cover: RESIDENTIAL

DESIGN DATA

Drainage Area	15.22	acres
Watercourse Length	1939.0	feet
Top Elevation	81.5	feet
Bottom Elevation	67.4	feet
Slope	.00728	feet/feet
Roughness Coefficient (Kb)	.03261	
10-Year, 6-Hour Rainfall	2.00	inches

Hydrological Summary Table

Parameter	2-Yr	5-Yr	10-Yr	25-Yr	50-Yr	100-Yr
Q (cfs)	18	25	30	43	54	65
C	0.528	0.528	0.528	0.581	0.634	0.660
Tc (min)	16.5	14.6	13.6	12.4	11.7	11.1
i (in/hr)	2.3	3.1	3.8	4.9	5.6	6.5

Flood Control District of Maricopa County
Hydrologic Design Manual Rational Method

Computed by: TJCL Date: 8-27-99

LOCATION DATA

Location: CP20H

Project Name: DREAMING SUMMIT Subarea id: 20H

Drainage Area Cover: RESIDENTIAL

DESIGN DATA

Drainage Area	13.69	acres
Watercourse Length	1700.0	feet
Top Elevation	78.9	feet
Bottom Elevation	67.8	feet
Slope	.00653	feet/feet
Roughness Coefficient (Kb)	.03290	
10-Year, 6-Hour Rainfall	2.00	inches

Hydrological Summary Table

Parameter	2-Yr	5-Yr	10-Yr	25-Yr	50-Yr	100-Yr
Q (cfs)	17	23	28	39	49	59
C	0.528	0.528	0.528	0.581	0.634	0.660
Tc (min)	16.0	14.1	13.2	12.0	11.4	10.7
i (in/hr)	2.3	3.2	3.8	4.9	5.7	6.5

Flood Control District of Maricopa County
Hydrologic Design Manual Rational Method

Computed by: SCK Date: 08-27-1999

LOCATION DATA

Location: CP24A*

Project Name: UNIT 2B Subarea id: 24A*

Drainage Area Cover: RESIDENTIAL

DESIGN DATA

Drainage Area	5.89	acres
Watercourse Length	995.0	feet
Top Elevation	82.5	feet
Bottom Elevation	69.6	feet
Slope	.01293	feet/feet
Roughness Coefficient (Kb)	.03519	
10-Year, 6-Hour Rainfall	2.00	inches

Hydrological Summary Table

Parameter	2-Yr	5-Yr	10-Yr	25-Yr	50-Yr	100-Yr
Q (cfs)	9	13	15	21	26	31
C	0.528	0.528	0.528	0.581	0.634	0.660
Tc (min)	9.3	8.3	7.7	7.1	6.7	6.4
i (in/hr)	2.9	4.0	4.8	6.0	6.9	8.0

Flood Control District of Maricopa County
Hydrologic Design Manual Rational Method

Computed by: SCK Date: 08-24-1999

LOCATION DATA

Location: CP24A

Project Name: UNIT 2B Subarea id: 24A

Drainage Area Cover: RESIDENTIAL

DESIGN DATA

Drainage Area	7.24	acres
Watercourse Length	1275.0	feet
Top Elevation	82.5	feet
Bottom Elevation	68.4	feet
Slope	.01105	feet/feet
Roughness Coefficient (Kb)	.03463	
10-Year, 6-Hour Rainfall	2.00	inches

Hydrological Summary Table

Parameter	2-Yr	5-Yr	10-Yr	25-Yr	50-Yr	100-Yr
Q (cfs)	10	14	17	24	30	36
C	0.528	0.528	0.528	0.581	0.634	0.660
Tc (min)	11.4	10.1	9.4	8.6	8.2	7.7
i (in/hr)	2.7	3.7	4.4	5.7	6.5	7.5

Flood Control District of Maricopa County
Hydrologic Design Manual Rational Method

Computed by: SCK Date: 08-27-1999

LOCATION DATA

Location: CP24B*

Project Name: UNIT 2B Subarea id: 24B*

Drainage Area Cover: RESIDENTIAL

DESIGN DATA

Drainage Area	8.23 acres
Watercourse Length	1435.0 feet
Top Elevation	83.4 feet
Bottom Elevation	67.6 feet
Slope	.01105 feet/feet
Roughness Coefficient (Kb)	.03428
10-Year, 6-Hour Rainfall	2.00 inches

Hydrological Summary Table

Parameter	2-Yr	5-Yr	10-Yr	25-Yr	50-Yr	100-Yr
Q (cfs)	11	16	19	26	33	40
C	0.528	0.528	0.528	0.581	0.634	0.660
Tc (min)	12.1	10.7	10.0	9.1	8.7	8.2
i (in/hr)	2.6	3.6	4.3	5.5	6.3	7.3

Flood Control District of Maricopa County
Hydrologic Design Manual Rational Method

Computed by: SCK Date: 08-24-1999

LOCATION DATA

Location: CP24B

Project Name: UNIT 2B Subarea id: 24B

Drainage Area Cover: RESIDENTIAL

DESIGN DATA

Drainage Area	16.67	acres
Watercourse Length	1710.0	feet
Top Elevation	83.4	feet
Bottom Elevation	67.2	feet
Slope	.00946	feet/feet
Roughness Coefficient (Kb)	.03237	
10-Year, 6-Hour Rainfall	2.00	inches

Hydrological Summary Table

Parameter	2-Yr	5-Yr	10-Yr	25-Yr	50-Yr	100-Yr
Q (cfs)	22	30	36	51	63	76
C	0.528	0.528	0.528	0.581	0.634	0.660
Tc (min)	13.8	12.2	11.4	10.4	9.8	9.3
i (in/hr)	2.5	3.4	4.1	5.2	6.0	6.9

Flood Control District of Maricopa County
Hydrologic Design Manual Rational Method

Computed by: SCK Date: 08-27-1999

LOCATION DATA

Location: CP24C*

Project Name: UNIT 2B Subarea id: 24C*

Drainage Area Cover: RESIDENTIAL

DESIGN DATA

Drainage Area	1.38	acres
Watercourse Length	385.0	feet
Top Elevation	70.0	feet
Bottom Elevation	67.4	feet
Slope	.00668	feet/feet
Roughness Coefficient (Kb)	.03913	
10-Year, 6-Hour Rainfall	2.00	inches

Hydrological Summary Table

Parameter	2-Yr	5-Yr	10-Yr	25-Yr	50-Yr	100-Yr
Q (cfs)	2	3	4	5	7	8
C	0.528	0.528	0.528	0.581	0.634	0.660
Tc (min)	7.3	6.4	6.0	5.6	5.3	5.0
i (in/hr)	3.2	4.4	5.3	6.5	7.6	8.7

Flood Control District of Maricopa County
Hydrologic Design Manual Rational Method

Computed by: SCK Date: 08-27-1999

LOCATION DATA

Location: CP24C**

Project Name: UNIT 2B Subarea id: 24C**

Drainage Area Cover: RESIDENTIAL

DESIGN DATA

Drainage Area	5.00	acres
Watercourse Length	960.0	feet
Top Elevation	85.8	feet
Bottom Elevation	66.6	feet
Slope	.02004	feet/feet
Roughness Coefficient (Kb)	.03563	
10-Year, 6-Hour Rainfall	2.00	inches

Hydrological Summary Table

Parameter	2-Yr	5-Yr	10-Yr	25-Yr	50-Yr	100-Yr
Q (cfs)	8	11	14	19	23	28
C	0.528	0.528	0.528	0.581	0.634	0.660
Tc (min)	7.8	7.0	6.5	6.0	5.7	5.4
i (in/hr)	3.2	4.3	5.2	6.4	7.4	8.5

Flood Control District of Maricopa County
Hydrologic Design Manual Rational Method

Computed by: SCK Date: 08-24-1999

LOCATION DATA

Location: CP24C

Project Name: UNIT 2B Subarea id: 24C

Drainage Area Cover: RESIDENTIAL

DESIGN DATA

Drainage Area	24.29	acres
Watercourse Length	2045.0	feet
Top Elevation	83.4	feet
Bottom Elevation	66.1	feet
Slope	.00847	feet/feet
Roughness Coefficient (Kb)	.03135	
10-Year, 6-Hour Rainfall	2.00	inches

Hydrological Summary Table

Parameter	2-Yr	5-Yr	10-Yr	25-Yr	50-Yr	100-Yr
Q (cfs)	30	41	49	70	88	106
C	0.528	0.528	0.528	0.581	0.634	0.660
Tc (min)	15.7	13.9	13.0	11.8	11.2	10.6
i (in/hr)	2.3	3.2	3.9	5.0	5.7	6.6

Flood Control District of Maricopa County
Hydrologic Design Manual Rational Method

Computed by: SCK Date: 08-27-1999

LOCATION DATA

Location: CP24D*

Project Name: UNIT 2B Subarea id: 24D*

Drainage Area Cover: RESIDENTIAL

DESIGN DATA

Drainage Area	7.08 acres
Watercourse Length	1100.0 feet
Top Elevation	87.7 feet
Bottom Elevation	69.3 feet
Slope	.01673 feet/feet
Roughness Coefficient (Kb)	.03469
10-Year, 6-Hour Rainfall	2.00 inches

Hydrological Summary Table

Parameter	2-Yr	5-Yr	10-Yr	25-Yr	50-Yr	100-Yr
Q (cfs)	11	15	18	25	32	38
C	0.528	0.528	0.528	0.581	0.634	0.660
Tc (min)	8.9	7.9	7.4	6.8	6.5	6.1
i (in/hr)	3.0	4.1	4.9	6.1	7.1	8.1

Flood Control District of Maricopa County
Hydrologic Design Manual Rational Method

Computed by: SCK Date: 08-24-1999

LOCATION DATA

Location: CP24D

Project Name: UNIT 2B Subarea id: 24D

Drainage Area Cover: RESIDENTIAL

DESIGN DATA

Drainage Area	7.83 acres
Watercourse Length	1400.0 feet
Top Elevation	87.7 feet
Bottom Elevation	66.1 feet
Slope	.01545 feet/feet
Roughness Coefficient (Kb)	.03442
10-Year, 6-Hour Rainfall	2.00 inches

Hydrological Summary Table

Parameter	2-Yr	5-Yr	10-Yr	25-Yr	50-Yr	100-Yr
Q (cfs)	11	16	19	26	33	40
C	0.528	0.528	0.528	0.581	0.634	0.660
Tc (min)	10.6	9.4	8.8	8.0	7.6	7.2
i (in/hr)	2.8	3.8	4.6	5.8	6.6	7.7

Flood Control District of Maricopa County
Hydrologic Design Manual Rational Method

Computed by: SCK Date: 08-25-1999

LOCATION DATA

Location: CP25

Project Name: UNIT 2B Subarea id: 25

Drainage Area Cover: RESIDENTIAL

DESIGN DATA

Drainage Area	2.74	acres
Watercourse Length	600.0	feet
Top Elevation	87.3	feet
Bottom Elevation	83.8	feet
Slope	.00583	feet/feet
Roughness Coefficient (Kb)	.03727	
10-Year, 6-Hour Rainfall	2.00	inches

Hydrological Summary Table

Parameter	2-Yr	5-Yr	10-Yr	25-Yr	50-Yr	100-Yr
Q (cfs)	4	6	7	10	12	14
C	0.528	0.528	0.528	0.581	0.634	0.660
Tc (min)	9.6	8.5	8.0	7.3	6.9	6.6
i (in/hr)	2.9	4.0	4.8	6.0	6.9	7.9

Flood Control District of Maricopa County
Hydrologic Design Manual Rational Method

Computed by: SCK Date: 08-25-1999

LOCATION DATA

Location: CP26

Project Name: UNIT 2B Subarea id: 26

Drainage Area Cover: RESIDENTIAL

DESIGN DATA

Drainage Area	0.97 acres
Watercourse Length	275.0 feet
Top Elevation	80.1 feet
Bottom Elevation	79.4 feet
Slope	.00240 feet/feet
Roughness Coefficient (Kb)	.04008
10-Year, 6-Hour Rainfall	2.00 inches

Hydrological Summary Table

Parameter	2-Yr	5-Yr	10-Yr	25-Yr	50-Yr	100-Yr
Q (cfs)	2	2	3	3	4	5
C	0.528	0.528	0.528	0.581	0.634	0.660
Tc (min)	8.8	7.8	7.3	6.7	6.3	6.0
i (in/hr)	3.0	4.1	4.9	6.2	7.1	8.2

Flood Control District of Maricopa County
Hydrologic Design Manual Rational Method

Computed by: SCK Date: 08-26-1999

LOCATION DATA

Location: CP27

Project Name: UNIT 2B Subarea id: 27

Drainage Area Cover: STREET

DESIGN DATA

Drainage Area	1.41	acres
Watercourse Length	1225.0	feet
Top Elevation	88.1	feet
Bottom Elevation	66.1	feet
Slope	.01795	feet/feet
Roughness Coefficient (Kb)	.03907	
10-Year, 6-Hour Rainfall	2.00	inches

Hydrological Summary Table

Parameter	2-Yr	5-Yr	10-Yr	25-Yr	50-Yr	100-Yr
Q (cfs)	3	4	5	7	9	10
C	0.760	0.760	0.760	0.836	0.912	0.950
Tc (min)	10.0	8.8	8.3	7.6	7.2	6.8
i (in/hr)	2.8	3.9	4.7	5.9	6.8	7.8

APPENDIX D
HYDRAULIC CALCULATIONS

TYP STREET SECTION - 4" ROLL CURB CP7
Worksheet for Irregular Channel

Project Description	
Worksheet	TYPICAL 4" ROLL CURB STREET SECTION - CP7
Flow Element	Irregular Channel
Method	Manning's Formula
Solve For	Channel Depth

Input Data		
Slope	0.005200	ft/ft
Discharge	11.00	cfs

Options	
Current Roughness Method	Improved Lotter's Method
Open Channel Weighting Method	Improved Lotter's Method
Closed Channel Weighting Method	Horton's Method

Results		
Mannings Coefficient	0.016	
Water Surface Elevation	0.33	ft
Elevation Range	0.00 to 0.63	
Flow Area	5.4	ft²
Wetted Perimeter	32.10	ft
Top Width	31.99	ft
Actual Depth	0.33	ft
Critical Elevation	0.31	ft
Critical Slope	0.006858	ft/ft
Velocity	2.05	ft/s
Velocity Head	0.07	ft
Specific Energy	0.39	ft
Froude Number	0.88	
Flow Type	Subcritical	

Roughness Segments

Start Station	End Station	Mannings Coefficient
0+00	0+05	0.030
0+05	0+10	0.013
0+10	0+41	0.016
0+41	0+45	0.013
0+45	0+50	0.030

Natural Channel Points

Station (ft)	Elevation (ft)
0+00	0.63
0+05	0.39
0+09	0.33
0+10	0.00
0+25	0.32
0+40	0.00
0+41	0.33
0+45	0.39
0+50	0.63

TYP SECTION 4" ROLL CURB - CP7
Rating Table for Irregular Channel

Project Description	
Worksheet	TYPICAL 4" ROLL CURB STREET SECTION - CP7
Flow Element	Irregular Channel
Method	Manning's Formula
Solve For	Channel Depth

Input Data	
Slope	0.005200 ft/ft

Options	
Current Roughness Method	Improved Lotter's Method
Open Channel Weighting Method	Improved Lotter's Method
Closed Channel Weighting Method	Horton's Method

Attribute	Minimum	Maximum	Increment
Discharge (cfs)	0.00	12.00	2.00

Discharge (cfs)	Water Surface Elevation (ft)	Velocity (ft/s)	Flow Area (ft²)	Wetted Perimeter (ft)	Top Width (ft)
0.00	0.00	0.00	0.0	0.00	0.00
2.00	0.17	1.32	1.5	17.44	17.38
4.00	0.23	1.57	2.5	22.62	22.54
6.00	0.26	1.74	3.4	26.33	26.24
8.00	0.29	1.87	4.3	29.33	29.23
10.00	0.32	1.98	5.1	31.89	31.78
12.00	0.34	2.11	5.7	33.19	33.08

← $Q_{10} = 5$ cfs, $d_{10} = 0.25'$

← $Q_{100} = 11$ cfs, $d_{100} = 0.33'$

TYP STREET SECTION - 4" ROLL CURB CP8A
Worksheet for Irregular Channel

Project Description	
Worksheet	TYPICAL 4" ROLL CURB STREET SECTION - CP8A
Flow Element	Irregular Channel
Method	Manning's Formula
Solve For	Channel Depth

Input Data		
Slope	0.003600	ft/ft
Discharge	19.00	cfs

Options	
Current Roughness Method	Improved Lotter's Method
Open Channel Weighting Method	Improved Lotter's Method
Closed Channel Weighting Method	Horton's Method

Results		
Mannings Coefficient	0.015	
Water Surface Elevation	0.42	ft
Elevation Range	0.00 to 0.63	
Flow Area	8.7	ft²
Wetted Perimeter	41.29	ft
Top Width	41.18	ft
Actual Depth	0.42	ft
Critical Elevation	0.39	ft
Critical Slope	0.005385	ft/ft
Velocity	2.17	ft/s
Velocity Head	0.07	ft
Specific Energy	0.49	ft
Froude Number	0.83	
Flow Type	Subcritical	

Roughness Segments

Start Station	End Station	Mannings Coefficient
0+00	0+05	0.030
0+05	0+10	0.013
0+10	0+41	0.016
0+41	0+45	0.013
0+45	0+50	0.030

Natural Channel Points

Station (ft)	Elevation (ft)
0+00	0.63
0+05	0.39
0+09	0.33
0+10	0.00
0+25	0.32
0+40	0.00
0+41	0.33
0+45	0.39
0+50	0.63

TYP SECTION 4" ROLL CURB - CP8A
Rating Table for Irregular Channel

Project Description	
Worksheet	TYPICAL 4" ROLL CURB STREET SECTION - CP8A
Flow Element	Irregular Channel
Method	Manning's Formula
Solve For	Channel Depth

Input Data	
Slope	0.003600 ft/ft

Options	
Current Roughness Method	Improved Lotter's Method
Open Channel Weighting Method	Improved Lotter's Method
Closed Channel Weighting Method	Horton's Method

Attribute	Minimum	Maximum	Increment
Discharge (cfs)	0.00	20.00	2.00

Discharge (cfs)	Water Surface Elevation (ft)	Velocity (ft/s)	Flow Area (ft^2)	Wetted Perimeter (ft)	Top Width (ft)
0.00	0.00	0.00	0.0	0.00	0.00
2.00	0.19	1.15	1.7	18.69	18.62
4.00	0.24	1.37	2.9	24.23	24.15
6.00	0.28	1.52	4.0	28.21	28.12
8.00	0.31	1.63	4.9	31.43	31.32
10.00	0.34	1.75	5.7	33.21	33.10
12.00	0.36	1.87	6.4	36.02	35.91
14.00	0.38	1.96	7.1	38.54	38.42
16.00	0.40	2.05	7.8	40.33	40.22
18.00	0.41	2.13	8.4	40.98	40.87
20.00	0.43	2.21	9.0	41.60	41.48

$Q_{10} = 9$ cfs, $d_{10} = 0.33'$

$Q_{100} = 19$ cfs, $d_{100} = 0.42'$

TYP STREET SECTION - 4" ROLL CURB CP8B
Worksheet for Irregular Channel

Project Description	
Worksheet	TYPICAL 4" ROLL CURB STREET SECTION - CP8B
Flow Element	Irregular Channel
Method	Manning's Formula
Solve For	Channel Depth

Input Data	
Slope	0.011200 ft/ft
Discharge	35.00 cfs

Options	
Current Roughness Method	Improved Lotter's Method
Open Channel Weighting Method	Improved Lotter's Method
Closed Channel Weighting Method	Horton's Method

Results	
Mannings Coefficient	0.015
Water Surface Elevation	0.42 ft
Elevation Range	0.00 to 0.63
Flow Area	9.0 ft²
Wetted Perimeter	41.55 ft
Top Width	41.44 ft
Actual Depth	0.42 ft
Critical Elevation	0.49 ft
Critical Slope	0.004807 ft/ft
Velocity	3.89 ft/s
Velocity Head	0.24 ft
Specific Energy	0.66 ft
Froude Number	1.47
Flow Type	Supercritical

Roughness Segments

Start Station	End Station	Mannings Coefficient
0+00	0+05	0.030
0+05	0+10	0.013
0+10	0+41	0.016
0+41	0+45	0.013
0+45	0+50	0.030

Natural Channel Points

Station (ft)	Elevation (ft)
0+00	0.63
0+05	0.39
0+09	0.33
0+10	0.00
0+25	0.32
0+40	0.00
0+41	0.33
0+45	0.39
0+50	0.63

TYP SECTION 4" ROLL CURB - CP8B
Rating Table for Irregular Channel

Project Description	
Worksheet	TYPICAL 4" ROLL CURB STREET SECTION - CP8B
Flow Element	Irregular Channel
Method	Manning's Formula
Solve For	Channel Depth

Input Data	
Slope	0.011200 ft/ft

Options	
Current Roughness Method	Improved Lotter's Method
Open Channel Weighting Method	Improved Lotter's Method
Closed Channel Weighting Method	Horton's Method

Attribute	Minimum	Maximum	Increment
Discharge (cfs)	0.00	36.00	2.00

Discharge (cfs)	Water Surface Elevation (ft)	Velocity (ft/s)	Flow Area (ft²)	Wetted Perimeter (ft)	Top Width (ft)
0.00	0.00	0.00	0.0	0.00	0.00
2.00	0.15	1.76	1.1	15.10	15.05
4.00	0.20	2.10	1.9	19.59	19.52
6.00	0.23	2.32	2.6	22.80	22.73
8.00	0.25	2.49	3.2	25.40	25.31
10.00	0.28	2.63	3.8	27.62	27.52
12.00	0.30	2.76	4.4	29.57	29.47
14.00	0.31	2.87	4.9	31.33	31.23
16.00	0.33	2.99	5.3	32.10	31.98
18.00	0.34	3.12	5.8	33.52	33.41
20.00	0.35	3.23	6.2	35.14	35.02
22.00	0.36	3.34	6.6	36.64	36.53
24.00	0.37	3.43	7.0	38.06	37.95
26.00	0.38	3.52	7.4	39.41	39.30
28.00	0.39	3.61	7.8	40.29	40.18
30.00	0.40	3.69	8.1	40.67	40.55
32.00	0.41	3.78	8.5	41.03	40.91
34.00	0.42	3.85	8.8	41.38	41.26
36.00	0.43	3.93	9.2	41.72	41.60

$Q_{10} = 17$ cfs, $d_{10} = 0.33'$

$Q_{100} = 35$ cfs, $d_{100} = 0.42'$

TYP STREET SECTION - 6" VERTICAL CURB CP8C
Worksheet for Irregular Channel

Project Description	
Worksheet	TYPICAL 6" VERTICAL CURB STREET SECTION - CP8C
Flow Element	Irregular Channel
Method	Manning's Formula
Solve For	Channel Depth

Input Data		
Slope	0.003600	ft/ft
Discharge	40.00	cfs

Options	
Current Roughness Method	Improved Lotter's Method
Open Channel Weighting Method	Improved Lotter's Method
Closed Channel Weighting Method	Horton's Method

Results		
Mannings Coefficient	0.014	
Water Surface Elevation	0.57	ft
Elevation Range	0.00 to 0.80	
Flow Area	13.5	ft²
Wetted Perimeter	41.17	ft
Top Width	40.54	ft
Actual Depth	0.57	ft
Critical Elevation	0.54	ft
Critical Slope	0.004404	ft/ft
Velocity	2.97	ft/s
Velocity Head	0.14	ft
Specific Energy	0.71	ft
Froude Number	0.91	
Flow Type	Subcritical	

Roughness Segments

Start Station	End Station	Mannings Coefficient
0+00	0+05	0.030
0+05	0+10	0.013
0+10	0+41	0.016
0+41	0+45	0.013
0+45	0+50	0.030

Natural Channel Points

Station (ft)	Elevation (ft)
0+00	0.80
0+05	0.56
0+09	0.50
0+10	0.00
0+25	0.32
0+41	0.00
0+41	0.50
0+45	0.56
0+50	0.80

TYP STREET SECTION - 6" VERTICAL CURB CP8C
Rating Table for Irregular Channel

Project Description	
Worksheet	TYPICAL 6" VERTICAL CURB STREET SECTION - CP8C
Flow Element	Irregular Channel
Method	Manning's Formula
Solve For	Channel Depth

Input Data	
Slope	0.003600 ft/ft

Options	
Current Roughness Method	Improved Lotter's Method
Open Channel Weighting Method	Improved Lotter's Method
Closed Channel Weighting Method	Horton's Method

Attribute	Minimum	Maximum	Increment
Discharge (cfs)	0.00	40.00	2.00

Discharge (cfs)	Water Surface Elevation (ft)	Velocity (ft/s)	Flow Area (ft²)	Wetted Perimeter (ft)	Top Width (ft)
0.00	0.00	0.00	0.0	0.00	0.00
2.00	0.19	1.15	1.7	18.81	18.57
4.00	0.24	1.36	2.9	24.39	24.08
6.00	0.28	1.51	4.0	28.40	28.04
8.00	0.32	1.62	4.9	31.63	31.23
10.00	0.34	1.76	5.7	32.10	31.68
12.00	0.36	1.89	6.3	32.17	31.72
14.00	0.38	2.01	7.0	32.24	31.76
16.00	0.40	2.12	7.5	32.29	31.80
18.00	0.42	2.22	8.1	32.35	31.83
20.00	0.43	2.32	8.6	32.41	31.86
22.00	0.45	2.41	9.1	32.46	31.90
24.00	0.46	2.49	9.6	32.51	31.93
26.00	0.48	2.57	10.1	32.56	31.96
28.00	0.49	2.65	10.6	32.60	31.99
30.00	0.51	2.71	11.1	33.75	33.13
32.00	0.52	2.77	11.6	35.67	35.04
34.00	0.54	2.82	12.0	37.46	36.84
36.00	0.55	2.87	12.5	39.18	38.55
38.00	0.56	2.92	13.0	40.69	40.06
40.00	0.57	2.97	13.5	41.17	40.54

← $Q_{10} = 19$ cfs, $d_{10} = 0.42'$

← $Q_{100} = 40$ cfs, $d_{100} = 0.57'$

TYP STREET SECTION - 4" ROLL CURB CP8D
Worksheet for Irregular Channel

Project Description	
Worksheet	TYPICAL 4" ROLL CURB STREET SECTION - CP8D
Flow Element	Irregular Channel
Method	Manning's Formula
Solve For	Channel Depth

Input Data		
Slope	0.011600	ft/ft
Discharge	35.00	cfs

Options	
Current Roughness Method	Improved Lotter's Method
Open Channel Weighting Method	Improved Lotter's Method
Closed Channel Weighting Method	Horton's Method

Results		
Mannings Coefficient	0.015	
Water Surface Elevation	0.42	ft
Elevation Range	0.00 to 0.63	
Flow Area	8.9	ft²
Wetted Perimeter	41.45	ft
Top Width	41.33	ft
Actual Depth	0.42	ft
Critical Elevation	0.49	ft
Critical Slope	0.004806	ft/ft
Velocity	3.94	ft/s
Velocity Head	0.24	ft
Specific Energy	0.66	ft
Froude Number	1.50	
Flow Type	Supercritical	

Roughness Segments

Start Station	End Station	Mannings Coefficient
0+00	0+05	0.030
0+05	0+10	0.013
0+10	0+41	0.016
0+41	0+45	0.013
0+45	0+50	0.030

Natural Channel Points

Station (ft)	Elevation (ft)
0+00	0.63
0+05	0.39
0+09	0.33
0+10	0.00
0+25	0.32
0+40	0.00
0+41	0.33
0+45	0.39
0+50	0.63

TYP SECTION 4" ROLL CURB - CP8D
Rating Table for Irregular Channel

Project Description	
Worksheet	TYPICAL 4" ROLL CURB STREET SECTION - CP8D
Flow Element	Irregular Channel
Method	Manning's Formula
Solve For	Channel Depth

Input Data	
Slope	0.011600 ft/ft

Options	
Current Roughness Method	Improved Lotter's Method
Open Channel Weighting Method	Improved Lotter's Method
Closed Channel Weighting Method	Horton's Method

Attribute	Minimum	Maximum	Increment
Discharge (cfs)	0.00	36.00	2.00

Discharge (cfs)	Water Surface Elevation (ft)	Velocity (ft/s)	Flow Area (ft²)	Wetted Perimeter (ft)	Top Width (ft)
0.00	0.00	0.00	0.0	0.00	0.00
2.00	0.15	1.79	1.1	15.00	14.95
4.00	0.19	2.12	1.9	19.46	19.39
6.00	0.23	2.35	2.6	22.65	22.58
8.00	0.25	2.53	3.2	25.23	25.15
10.00	0.27	2.67	3.7	27.44	27.34
12.00	0.29	2.79	4.3	29.38	29.28
14.00	0.31	2.90	4.8	31.13	31.02
16.00	0.33	3.03	5.3	32.08	31.97
18.00	0.34	3.15	5.7	33.25	33.14
20.00	0.35	3.27	6.1	34.86	34.75
22.00	0.36	3.38	6.5	36.36	36.25
24.00	0.37	3.47	6.9	37.77	37.66
26.00	0.38	3.57	7.3	39.11	39.00
28.00	0.39	3.65	7.7	40.20	40.08
30.00	0.40	3.74	8.0	40.57	40.45
32.00	0.41	3.82	8.4	40.93	40.81
34.00	0.42	3.90	8.7	41.28	41.16
36.00	0.43	3.98	9.1	41.61	41.50

$Q_{10} = 16$ cfs, $d_{10} = 0.33'$

$Q_{100} = 35$ cfs, $d_{100} = 0.42'$

TYP STREET SECTION - 4" ROLL CURB CP8E
Worksheet for Irregular Channel

Project Description	
Worksheet	TYPICAL 4" ROLL CURB STREET SECTION - CP8E
Flow Element	Irregular Channel
Method	Manning's Formula
Solve For	Channel Depth

Input Data		
Slope	0.003200	ft/ft
Discharge	19.00	cfs

Options	
Current Roughness Method	Improved Lotter's Method
Open Channel Weighting Method	Improved Lotter's Method
Closed Channel Weighting Method	Horton's Method

Results		
Mannings Coefficient	0.015	
Water Surface Elevation	0.43	ft
Elevation Range	0.00 to 0.63	
Flow Area	9.1	ft²
Wetted Perimeter	41.64	ft
Top Width	41.53	ft
Actual Depth	0.43	ft
Critical Elevation	0.39	ft
Critical Slope	0.005387	ft/ft
Velocity	2.09	ft/s
Velocity Head	0.07	ft
Specific Energy	0.49	ft
Froude Number	0.79	
Flow Type	Subcritical	

Roughness Segments

Start Station	End Station	Mannings Coefficient
0+00	0+05	0.030
0+05	0+10	0.013
0+10	0+41	0.016
0+41	0+45	0.013
0+45	0+50	0.030

Natural Channel Points

Station (ft)	Elevation (ft)
0+00	0.63
0+05	0.39
0+09	0.33
0+10	0.00
0+25	0.32
0+40	0.00
0+41	0.33
0+45	0.39
0+50	0.63

TYP SECTION 4" ROLL CURB - CP8E
Rating Table for Irregular Channel

Project Description	
Worksheet	TYPICAL 4" ROLL CURB STREET SECTION - CP8E
Flow Element	Irregular Channel
Method	Manning's Formula
Solve For	Channel Depth

Input Data	
Slope	0.003200 ft/ft

Options	
Current Roughness Method	Improved Lotter's Method
Open Channel Weighting Method	Improved Lotter's Method
Closed Channel Weighting Method	Horton's Method

Attribute	Minimum	Maximum	Increment
Discharge (cfs)	0.00	20.00	2.00

Discharge (cfs)	Water Surface Elevation (ft)	Velocity (ft/s)	Flow Area (ft²)	Wetted Perimeter (ft)	Top Width (ft)
0.00	0.00	0.00	0.0	0.00	0.00
2.00	0.19	1.10	1.8	19.10	19.04
4.00	0.25	1.31	3.1	24.77	24.69
6.00	0.29	1.45	4.1	28.84	28.74
8.00	0.32	1.56	5.1	32.05	31.94
10.00	0.34	1.69	5.9	34.11	34.00
12.00	0.37	1.80	6.7	36.97	36.85
14.00	0.39	1.89	7.4	39.54	39.42
16.00	0.40	1.97	8.1	40.65	40.54
18.00	0.42	2.05	8.8	41.32	41.21
20.00	0.43	2.13	9.4	41.96	41.84

$Q_{10} = 9cfs, d_{10} = 0.33'$

$Q_{100} = 19cfs, d_{100} = 0.43'$

TYP STREET SECTION - 6" VERTICAL CURB CP8F
Worksheet for Irregular Channel

Project Description	
Worksheet	TYPICAL 6" VERTICAL CURB STREET SECTION - CP8F
Flow Element	Irregular Channel
Method	Manning's Formula
Solve For	Channel Depth

Input Data	
Slope	0.011600 ft/ft
Discharge	40.00 cfs

Options	
Current Roughness Method	Improved Lotter's Method
Open Channel Weighting Method	Improved Lotter's Method
Closed Channel Weighting Method	Horton's Method

Results	
Mannings Coefficient	0.016
Water Surface Elevation	0.45 ft
Elevation Range	0.00 to 0.80
Flow Area	9.2 ft²
Wetted Perimeter	32.46 ft
Top Width	31.90 ft
Actual Depth	0.45 ft
Critical Elevation	0.54 ft
Critical Slope	0.005482 ft/ft
Velocity	4.34 ft/s
Velocity Head	0.29 ft
Specific Energy	0.74 ft
Froude Number	1.42
Flow Type	Supercritical

Roughness Segments

Start Station	End Station	Mannings Coefficient
0+00	0+05	0.030
0+05	0+10	0.013
0+10	0+41	0.016
0+41	0+45	0.013
0+45	0+50	0.030

Natural Channel Points

Station (ft)	Elevation (ft)
0+00	0.80
0+05	0.56
0+09	0.50
0+10	0.00
0+25	0.32
0+41	0.00
0+41	0.50
0+45	0.56
0+50	0.80

TYP STREET SECTION - 6" VERTICAL CURB CP8F
Rating Table for Irregular Channel

Project Description	
Worksheet	TYPICAL 6" VERTICAL CURB STREET SECTION - CP8F
Flow Element	Irregular Channel
Method	Manning's Formula
Solve For	Channel Depth

Input Data	
Slope	0.011600 ft/ft

Options	
Current Roughness Method	Improved Lotter's Method
Open Channel Weighting Method	Improved Lotter's Method
Closed Channel Weighting Method	Horton's Method

Attribute	Minimum	Maximum	Increment
Discharge (cfs)	0.00	40.00	2.00

Discharge (cfs)	Water Surface Elevation (ft)	Velocity (ft/s)	Flow Area (ft²)	Wetted Perimeter (ft)	Top Width (ft)
0.00	0.00	0.00	0.0	0.00	0.00
2.00	0.15	1.78	1.1	15.10	14.91
4.00	0.20	2.11	1.9	19.59	19.34
6.00	0.23	2.34	2.6	22.80	22.52
8.00	0.25	2.51	3.2	25.40	25.08
10.00	0.28	2.66	3.8	27.62	27.27
12.00	0.30	2.78	4.3	29.58	29.20
14.00	0.31	2.89	4.8	31.34	30.94
16.00	0.33	3.02	5.3	32.07	31.65
18.00	0.34	3.17	5.7	32.11	31.68
20.00	0.35	3.30	6.1	32.14	31.70
22.00	0.36	3.43	6.4	32.18	31.73
24.00	0.37	3.55	6.8	32.22	31.75
26.00	0.38	3.66	7.1	32.25	31.77
28.00	0.39	3.77	7.4	32.28	31.79
30.00	0.40	3.88	7.7	32.32	31.81
32.00	0.41	3.98	8.0	32.35	31.83
34.00	0.42	4.07	8.3	32.38	31.85
36.00	0.43	4.17	8.6	32.41	31.87
38.00	0.44	4.26	8.9	32.44	31.88
40.00	0.45	4.34	9.2	32.46	31.90

$Q_{10} = 19$ cfs, $d_{10} = 0.35'$

$Q_{100} = 40$ cfs, $d_{100} = 0.45'$

TYP STREET SECTION - 6" VERTICAL CURB CP8G
Worksheet for Irregular Channel

Project Description	
Worksheet	TYPICAL 6" VERTICAL CURB STREET SECTION - CP8G
Flow Element	Irregular Channel
Method	Manning's Formula
Solve For	Channel Depth

Input Data		
Slope	0.003200	ft/ft
Discharge	53.80	cfs

Options	
Current Roughness Method	Improved Lotter's Method
Open Channel Weighting Method	Improved Lotter's Method
Closed Channel Weighting Method	Horton's Method

Results		
Mannings Coefficient	0.014	
Water Surface Elevation	0.66	ft
Elevation Range	0.00 to 0.80	
Flow Area	17.2	ft²
Wetted Perimeter	44.84	ft
Top Width	44.20	ft
Actual Depth	0.66	ft
Critical Elevation	0.63	ft
Critical Slope	0.004178	ft/ft
Velocity	3.13	ft/s
Velocity Head	0.15	ft
Specific Energy	0.81	ft
Froude Number	0.88	
Flow Type	Subcritical	

Roughness Segments

Start Station	End Station	Mannings Coefficient
0+00	0+05	0.030
0+05	0+10	0.013
0+10	0+41	0.016
0+41	0+45	0.013
0+45	0+50	0.030

Natural Channel Points

Station (ft)	Elevation (ft)
0+00	0.80
0+05	0.56
0+09	0.50
0+10	0.00
0+25	0.32
0+41	0.00
0+41	0.50
0+45	0.56
0+50	0.80

TYP STREET SECTION - 6" VERTICAL CURB CP8G
Worksheet for Irregular Channel

Notes:
Total Q = Q(Rational) - [Q(intercept CP8B) + Q(intercept CP8C) + Q(intercept CP8F)]

10-year Q = 54 cfs - (3.4 cfs + 19 cfs + 13.6 cfs) = 18 cfs

100-year Q = 116 cfs - (4.6 cfs + 38 cfs + 19.6 cfs) = 53.8 cfs

TYP STREET SECTION - 6" VERTICAL CURB CP8G
Rating Table for Irregular Channel

Project Description	
Worksheet	TYPICAL 6" VERTICAL CURB STREET SECTION - CP8G
Flow Element	Irregular Channel
Method	Manning's Formula
Solve For	Channel Depth

Input Data	
Slope	0.003200 ft/ft

Options	
Current Roughness Method	Improved Lotter's Method
Open Channel Weighting Method	Improved Lotter's Method
Closed Channel Weighting Method	Horton's Method

Attribute	Minimum	Maximum	Increment
Discharge (cfs)	0.00	54.00	2.00

Discharge (cfs)	Water Surface Elevation (ft)	Velocity (ft/s)	Flow Area (ft²)	Wetted Perimeter (ft)	Top Width (ft)
0.00	0.00	0.00	0.0	0.00	0.00
2.00	0.19	1.10	1.8	19.23	18.99
4.00	0.25	1.30	3.1	24.94	24.63
6.00	0.29	1.44	4.2	29.03	28.67
8.00	0.32	1.56	5.1	32.05	31.64
10.00	0.35	1.70	5.9	32.13	31.69
12.00	0.37	1.83	6.6	32.20	31.73
14.00	0.39	1.94	7.2	32.26	31.78
16.00	0.41	2.05	7.8	32.32	31.81
18.00	0.42	2.15	8.4	32.38	31.85
20.00	0.44	2.24	8.9	32.44	31.88
22.00	0.46	2.32	9.5	32.49	31.92
24.00	0.47	2.40	10.0	32.54	31.95
26.00	0.49	2.48	10.5	32.59	31.98
28.00	0.51	2.55	11.0	33.44	32.82
30.00	0.52	2.61	11.5	35.50	34.87
32.00	0.54	2.66	12.0	37.41	36.79
34.00	0.55	2.71	12.5	39.23	38.61
36.00	0.56	2.76	13.1	40.73	40.11
38.00	0.57	2.81	13.5	41.24	40.61
40.00	0.59	2.85	14.0	41.73	41.11
42.00	0.60	2.90	14.5	42.22	41.59
44.00	0.61	2.94	15.0	42.68	42.06
46.00	0.62	2.98	15.4	43.14	42.51
48.00	0.63	3.02	15.9	43.59	42.96
50.00	0.64	3.06	16.4	44.03	43.40
52.00	0.65	3.10	16.8	44.46	43.83
54.00	0.66	3.13	17.2	44.88	44.25

← Q_{10} = 18 cfs, d_{10} = 0.42'

← Q_{100} = 53.8 cfs, d_{100} = 0.66'

TYP STREET SECTION - 4" ROLL CURB CP9A
Worksheet for Irregular Channel

Project Description	
Worksheet	TYPICAL 4" ROLL CURB STREET SECTION - CP9A
Flow Element	Irregular Channel
Method	Manning's Formula
Solve For	Channel Depth

Input Data		
Slope	0.003600	ft/ft
Discharge	19.00	cfs

Options	
Current Roughness Method	Improved Lotter's Method
Open Channel Weighting Method	Improved Lotter's Method
Closed Channel Weighting Method	Horton's Method

Results		
Mannings Coefficient	0.015	
Water Surface Elevation	0.42	ft
Elevation Range	0.00 to 0.63	
Flow Area	8.7	ft²
Wetted Perimeter	41.29	ft
Top Width	41.18	ft
Actual Depth	0.42	ft
Critical Elevation	0.39	ft
Critical Slope	0.005385	ft/ft
Velocity	2.17	ft/s
Velocity Head	0.07	ft
Specific Energy	0.49	ft
Froude Number	0.83	
Flow Type	Subcritical	

Roughness Segments

Start Station	End Station	Mannings Coefficient
0+00	0+05	0.030
0+05	0+10	0.013
0+10	0+41	0.016
0+41	0+45	0.013
0+45	0+50	0.030

Natural Channel Points

Station (ft)	Elevation (ft)
0+00	0.63
0+05	0.39
0+09	0.33
0+10	0.00
0+25	0.32
0+40	0.00
0+41	0.33
0+45	0.39
0+50	0.63

TYP SECTION 4" ROLL CURB - CP9A
Rating Table for Irregular Channel

Project Description	
Worksheet	TYPICAL 4" ROLL CURB STREET SECTION - CP9A
Flow Element	Irregular Channel
Method	Manning's Formula
Solve For	Channel Depth

Input Data	
Slope	0.003600 ft/ft

Options	
Current Roughness Method	Improved Lotter's Method
Open Channel Weighting Method	Improved Lotter's Method
Closed Channel Weighting Method	Horton's Method

Attribute	Minimum	Maximum	Increment
Discharge (cfs)	0.00	20.00	2.00

Discharge (cfs)	Water Surface Elevation (ft)	Velocity (ft/s)	Flow Area (ft²)	Wetted Perimeter (ft)	Top Width (ft)
0.00	0.00	0.00	0.0	0.00	0.00
2.00	0.19	1.15	1.7	18.69	18.62
4.00	0.24	1.37	2.9	24.23	24.15
6.00	0.28	1.52	4.0	28.21	28.12
8.00	0.31	1.63	4.9	31.43	31.32
10.00	0.34	1.75	5.7	33.21	33.10
12.00	0.36	1.87	6.4	36.02	35.91
14.00	0.38	1.96	7.1	38.54	38.42
16.00	0.40	2.05	7.8	40.33	40.22
18.00	0.41	2.13	8.4	40.98	40.87
20.00	0.43	2.21	9.0	41.60	41.48

$Q_{10} = 9$ cfs, $d_{10} = 0.33'$

$Q_{100} = 19$ cfs, $d_{100} = 0.42'$

TYP STREET SECTION - 6" VERTICAL CURB CP9B
Worksheet for Irregular Channel

Project Description	
Worksheet	TYPICAL 6" VERTICAL CURB STREET SECTION - CP9B
Flow Element	Irregular Channel
Method	Manning's Formula
Solve For	Channel Depth

Input Data		
Slope	0.003600	ft/ft
Discharge	22.00	cfs

Options	
Current Roughness Method	Improved Lotter's Method
Open Channel Weighting Method	Improved Lotter's Method
Closed Channel Weighting Method	Horton's Method

Results		
Mannings Coefficient	0.016	
Water Surface Elevation	0.45	ft
Elevation Range	0.00 to 0.80	
Flow Area	9.1	ft²
Wetted Perimeter	32.46	ft
Top Width	31.90	ft
Actual Depth	0.45	ft
Critical Elevation	0.41	ft
Critical Slope	0.006015	ft/ft
Velocity	2.41	ft/s
Velocity Head	0.09	ft
Specific Energy	0.54	ft
Froude Number	0.79	
Flow Type	Subcritical	

Roughness Segments

Start Station	End Station	Mannings Coefficient
0+00	0+05	0.030
0+05	0+10	0.013
0+10	0+41	0.016
0+41	0+45	0.013
0+45	0+50	0.030

Natural Channel Points

Station (ft)	Elevation (ft)
0+00	0.80
0+05	0.56
0+09	0.50
0+10	0.00
0+25	0.32
0+41	0.00
0+41	0.50
0+45	0.56
0+50	0.80

TYP STREET SECTION - 6" VERTICAL CURB CP9B
Rating Table for Irregular Channel

Project Description	
Worksheet	TYPICAL 6" VERTICAL CURB STREET SECTION - CP9B
Flow Element	Irregular Channel
Method	Manning's Formula
Solve For	Channel Depth

Input Data	
Slope	0.003600 ft/ft

Options	
Current Roughness Method	Improved Lotter's Method
Open Channel Weighting Method	Improved Lotter's Method
Closed Channel Weighting Method	Horton's Method

Attribute	Minimum	Maximum	Increment
Discharge (cfs)	0.00	22.00	2.00

Discharge (cfs)	Water Surface Elevation (ft)	Velocity (ft/s)	Flow Area (ft²)	Wetted Perimeter (ft)	Top Width (ft)	
0.00	0.00	0.00	0.0	0.00	0.00	
2.00	0.19	1.15	1.7	18.81	18.57	
4.00	0.24	1.36	2.9	24.39	24.08	
6.00	0.28	1.51	4.0	28.40	28.04	
8.00	0.32	1.62	4.9	31.63	31.23	
10.00	0.34	1.76	5.7	32.10	31.68	← $Q_{10} = 10$ cfs. $d_{10} = 0.34'$
12.00	0.36	1.89	6.3	32.17	31.72	
14.00	0.38	2.01	7.0	32.24	31.76	
16.00	0.40	2.12	7.5	32.29	31.80	
18.00	0.42	2.22	8.1	32.35	31.83	
20.00	0.43	2.32	8.6	32.41	31.86	
22.00	0.45	2.41	9.1	32.46	31.90	← $Q_{100} = 22$ cfs. $d_{100} = 0.46'$

TYP STREET SECTION - 4" ROLL CURB CP20A
Worksheet for Irregular Channel

Project Description	
Worksheet	TYPICAL 4" ROLL CURB STREET SECTION - CP20A
Flow Element	Irregular Channel
Method	Manning's Formula
Solve For	Channel Depth

Input Data		
Slope	0.015100	ft/ft
Discharge	32.00	cfs

Options	
Current Roughness Method	Improved Lotter's Method
Open Channel Weighting Method	Improved Lotter's Method
Closed Channel Weighting Method	Horton's Method

Results		
Mannings Coefficient	0.015	
Water Surface Elevation	0.39	ft
Elevation Range	0.00 to 0.63	
Flow Area	7.7	ft²
Wetted Perimeter	40.21	ft
Top Width	40.09	ft
Actual Depth	0.39	ft
Critical Elevation	0.48	ft
Critical Slope	0.004864	ft/ft
Velocity	4.17	ft/s
Velocity Head	0.27	ft
Specific Energy	0.66	ft
Froude Number	1.68	
Flow Type	Supercritical	

Roughness Segments

Start Station	End Station	Mannings Coefficient
0+00	0+05	0.030
0+05	0+10	0.013
0+10	0+41	0.016
0+41	0+45	0.013
0+45	0+50	0.030

Natural Channel Points

Station (ft)	Elevation (ft)
0+00	0.63
0+05	0.39
0+09	0.33
0+10	0.00
0+25	0.32
0+40	0.00
0+41	0.33
0+45	0.39
0+50	0.63

TYP SECTION 4" ROLL CURB - CP20A
Rating Table for Irregular Channel

Project Description	
Worksheet	TYPICAL 4" ROLL CURB STREET SECTION - CP20A
Flow Element	Irregular Channel
Method	Manning's Formula
Solve For	Channel Depth

Input Data	
Slope	0.015100 ft/ft

Options	
Current Roughness Method	Improved Lotter's Method
Open Channel Weighting Method	Improved Lotter's Method
Closed Channel Weighting Method	Horton's Method

Attribute	Minimum	Maximum	Increment
Discharge (cfs)	0.00	32.00	2.00

Discharge (cfs)	Water Surface Elevation (ft)	Velocity (ft/s)	Flow Area (ft²)	Wetted Perimeter (ft)	Top Width (ft)	
0.00	0.00	0.00	0.0	0.00	0.00	
2.00	0.14	1.97	1.0	14.28	14.23	
4.00	0.18	2.34	1.7	18.52	18.46	
6.00	0.22	2.59	2.3	21.56	21.49	
8.00	0.24	2.79	2.9	24.02	23.94	
10.00	0.26	2.95	3.4	26.11	26.02	
12.00	0.28	3.08	3.9	27.96	27.87	
14.00	0.30	3.21	4.4	29.63	29.52	
16.00	0.31	3.31	4.8	31.15	31.04	← $Q_{10} = 16$ cfs, $d_{10} = 0.31'$
18.00	0.32	3.43	5.2	32.08	31.96	
20.00	0.34	3.57	5.6	32.85	32.74	
22.00	0.35	3.68	6.0	34.30	34.19	
24.00	0.36	3.79	6.3	35.65	35.54	
26.00	0.37	3.90	6.7	36.92	36.81	
28.00	0.38	3.99	7.0	38.14	38.03	
30.00	0.38	4.08	7.3	39.30	39.19	
32.00	0.39	4.17	7.7	40.21	40.09	← $Q_{100} = 32$ cfs, $d_{100} = 0.39'$

TYP STREET SECTION - 4" ROLL CURB CP20B
Worksheet for Irregular Channel

Project Description	
Worksheet	TYPICAL 4" ROLL CURB STREET SECTION - CP20B
Flow Element	Irregular Channel
Method	Manning's Formula
Solve For	Channel Depth

Input Data	
Slope	0.011500 ft/ft
Discharge	23.00 cfs

Options	
Current Roughness Method	Improved Lotter's Method
Open Channel Weighting Method	Improved Lotter's Method
Closed Channel Weighting Method	Horton's Method

Results	
Mannings Coefficient	0.015
Water Surface Elevation	0.37 ft
Elevation Range	0.00 to 0.63
Flow Area	6.7 ft²
Wetted Perimeter	37.14 ft
Top Width	37.03 ft
Actual Depth	0.37 ft
Critical Elevation	0.42 ft
Critical Slope	0.005464 ft/ft
Velocity	3.42 ft/s
Velocity Head	0.18 ft
Specific Energy	0.55 ft
Froude Number	1.41
Flow Type	Supercritical

Roughness Segments

Start Station	End Station	Mannings Coefficient
0+00	0+05	0.030
0+05	0+10	0.013
0+10	0+41	0.016
0+41	0+45	0.013
0+45	0+50	0.030

Natural Channel Points

Station (ft)	Elevation (ft)
0+00	0.63
0+05	0.39
0+09	0.33
0+10	0.00
0+25	0.32
0+40	0.00
0+41	0.33
0+45	0.39
0+50	0.63

TYP SECTION 4" ROLL CURB - CP20B
Rating Table for Irregular Channel

Project Description	
Worksheet	TYPICAL 4" ROLL CURB STREET SECTION - CP20B
Flow Element	Irregular Channel
Method	Manning's Formula
Solve For	Channel Depth

Input Data	
Slope	0.011500 ft/ft

Options	
Current Roughness Method	Improved Lotter's Method
Open Channel Weighting Method	Improved Lotter's Method
Closed Channel Weighting Method	Horton's Method

Attribute	Minimum	Maximum	Increment
Discharge (cfs)	0.00	24.00	2.00

Discharge (cfs)	Water Surface Elevation (ft)	Velocity (ft/s)	Flow Area (ft²)	Wetted Perimeter (ft)	Top Width (ft)	
0.00	0.00	0.00	0.0	0.00	0.00	
2.00	0.15	1.78	1.1	15.03	14.98	
4.00	0.19	2.12	1.9	19.49	19.42	
6.00	0.23	2.34	2.6	22.69	22.61	
8.00	0.25	2.52	3.2	25.28	25.19	
10.00	0.27	2.66	3.8	27.48	27.39	
12.00	0.29	2.79	4.3	29.43	29.33	← $Q_{10} = 11$ cfs, $d_{10} = 0.28'$
14.00	0.31	2.89	4.8	31.18	31.07	
16.00	0.33	3.02	5.3	32.09	31.98	
18.00	0.34	3.14	5.7	33.32	33.21	
20.00	0.35	3.26	6.1	34.93	34.82	
22.00	0.36	3.37	6.5	36.43	36.31	
24.00	0.37	3.46	6.9	37.84	37.73	← $Q_{100} = 23$ cfs, $d_{100} = 0.36'$

TYP STREET SECTION - 6" VERTICAL CURB CP20C
Worksheet for Irregular Channel

Project Description	
Worksheet	TYPICAL 6" VERTICAL CURB STREET SECTION - CP20C
Flow Element	Irregular Channel
Method	Manning's Formula
Solve For	Channel Depth

Input Data	
Slope	0.012900 ft/ft
Discharge	61.00 cfs

Options	
Current Roughness Method	Improved Lotter's Method
Open Channel Weighting Method	Improved Lotter's Method
Closed Channel Weighting Method	Horton's Method

Results	
Mannings Coefficient	0.015
Water Surface Elevation	0.52 ft
Elevation Range	0.00 to 0.80
Flow Area	11.6 ft²
Wetted Perimeter	35.74 ft
Top Width	34.73 ft
Actual Depth	0.52 ft
Critical Elevation	0.66 ft
Critical Slope	0.004673 ft/ft
Velocity	5.28 ft/s
Velocity Head	0.43 ft
Specific Energy	0.95 ft
Froude Number	1.61
Flow Type	Supercritical

Roughness Segments

Start Station	End Station	Mannings Coefficient
0+00	0+05	0.030
0+05	0+09	0.013
0+09	0+41	0.016
0+41	0+45	0.013
0+45	0+50	0.030

Natural Channel Points

Station (ft)	Elevation (ft)
0+00	0.80
0+05	0.56
0+09	0.50
0+09	0.00
0+25	0.32
0+41	0.00
0+41	0.50
0+45	0.56
0+50	0.80

TYP STREET SECTION - 6" VERTICAL CURB CP20C
Rating Table for Irregular Channel

Project Description	
Worksheet	TYPICAL 6" VERTICAL CURB STREET SECTION - CP20C
Flow Element	Irregular Channel
Method	Manning's Formula
Solve For	Channel Depth

Input Data	
Slope	0.012900 ft/ft

Options	
Current Roughness Method	Improved Lotter's Method
Open Channel Weighting Method	Improved Lotter's Method
Closed Channel Weighting Method	Horton's Method

Attribute	Minimum	Maximum	Increment
Discharge (cfs)	1.00	61.00	2.00

Discharge (cfs)	Water Surface Elevation (ft)	Velocity (ft/s)	Flow Area (ft²)	Wetted Perimeter (ft)	Top Width (ft)
1.00	0.11	1.54	0.6	11.62	11.39
3.00	0.17	2.03	1.5	17.54	17.19
5.00	0.21	2.31	2.2	21.24	20.82
7.00	0.24	2.51	2.8	24.10	23.62
9.00	0.26	2.67	3.4	26.48	25.95
11.00	0.28	2.81	3.9	28.55	27.98
13.00	0.30	2.93	4.4	30.39	29.79
15.00	0.31	3.04	4.9	32.07	31.43
17.00	0.33	3.17	5.4	32.66	32.00
19.00	0.34	3.31	5.7	32.68	32.00
21.00	0.35	3.45	6.1	32.71	32.00
23.00	0.36	3.57	6.4	32.73	32.00
25.00	0.37	3.69	6.8	32.75	32.00
27.00	0.38	3.81	7.1	32.77	32.00
29.00	0.39	3.92	7.4	32.79	32.00
31.00	0.40	4.02	7.7	32.81	32.00
33.00	0.41	4.12	8.0	32.83	32.00
35.00	0.42	4.22	8.3	32.84	32.00
37.00	0.43	4.32	8.6	32.86	32.00
39.00	0.44	4.41	8.8	32.88	32.00
41.00	0.45	4.50	9.1	32.90	32.00
43.00	0.45	4.58	9.4	32.91	32.00
45.00	0.46	4.66	9.6	32.93	32.00
47.00	0.47	4.75	9.9	32.95	32.00
49.00	0.48	4.82	10.2	32.96	32.00
51.00	0.49	4.90	10.4	32.98	32.00
53.00	0.49	4.98	10.6	32.99	32.00
55.00	0.50	5.05	10.9	33.06	32.06
57.00	0.51	5.09	11.2	34.28	33.28
59.00	0.52	5.18	11.4	35.07	34.06
61.00	0.52	5.28	11.6	35.74	34.73

$Q_{10} = 29$
$d_{10} = 0.39$

$Q_{100} = 61$ cfs
$d_{100} = 0.52'$

TYP STREET SECTION - 4" ROLL CURB CP20D
Worksheet for Irregular Channel

Project Description	
Worksheet	TYPICAL 4" ROLL CURB STREET SECTION - CP20D
Flow Element	Irregular Channel
Method	Manning's Formula
Solve For	Channel Depth

Input Data	
Slope	0.012700 ft/ft
Discharge	19.00 cfs

Options	
Current Roughness Method	Improved Lotter's Method
Open Channel Weighting Method	Improved Lotter's Method
Closed Channel Weighting Method	Horton's Method

Results	
Mannings Coefficient	0.016
Water Surface Elevation	0.34 ft
Elevation Range	0.00 to 0.63
Flow Area	5.7 ft²
Wetted Perimeter	33.39 ft
Top Width	33.27 ft
Actual Depth	0.34 ft
Critical Elevation	0.39 ft
Critical Slope	0.006219 ft/ft
Velocity	3.31 ft/s
Velocity Head	0.17 ft
Specific Energy	0.51 ft
Froude Number	1.40
Flow Type	Supercritical

Roughness Segments

Start Station	End Station	Mannings Coefficient
0+00	0+05	0.030
0+05	0+10	0.013
0+10	0+41	0.016
0+41	0+45	0.013
0+45	0+50	0.030

Natural Channel Points

Station (ft)	Elevation (ft)
0+00	0.63
0+05	0.39
0+09	0.33
0+10	0.00
0+25	0.32
0+40	0.00
0+41	0.33
0+45	0.39
0+50	0.63

TYP SECTION 4" ROLL CURB - CP20D
Rating Table for Irregular Channel

Project Description	
Worksheet	TYPICAL 4" ROLL CURB STREET SECTION - CP20D
Flow Element	Irregular Channel
Method	Manning's Formula
Solve For	Channel Depth

Input Data	
Slope	0.012700 ft/ft

Options	
Current Roughness Method	Improved Lotter's Method
Open Channel Weighting Method	Improved Lotter's Method
Closed Channel Weighting Method	Horton's Method

Attribute	Minimum	Maximum	Increment
Discharge (cfs)	0.00	20.00	2.00

Discharge (cfs)	Water Surface Elevation (ft)	Velocity (ft/s)	Flow Area (ft²)	Wetted Perimeter (ft)	Top Width (ft)
0.00	0.00	0.00	0.0	0.00	0.00
2.00	0.15	1.85	1.1	14.75	14.70
4.00	0.19	2.20	1.8	19.13	19.07
6.00	0.22	2.43	2.5	22.27	22.20
8.00	0.25	2.61	3.1	24.81	24.72
10.00	0.27	2.76	3.6	26.98	26.88
12.00	0.29	2.89	4.2	28.88	28.79
14.00	0.31	3.00	4.7	30.60	30.50
16.00	0.32	3.11	5.1	32.06	31.95
18.00	0.33	3.25	5.5	32.56	32.45
20.00	0.35	3.37	5.9	34.17	34.06

$Q_{10} = 9cfs, d_{10} = 0.26'$

$Q_{100} = 19cfs, d_{100} = 0.34'$

TYP STREET SECTION - 4" ROLL CURB CP20E
Worksheet for Irregular Channel

Project Description	
Worksheet	TYPICAL 4" ROLL CURB STREET SECTION - CP20E
Flow Element	Irregular Channel
Method	Manning's Formula
Solve For	Channel Depth

Input Data		
Slope	0.011800	ft/ft
Discharge	24.00	cfs

Options	
Current Roughness Method	Improved Lotter's Method
Open Channel Weighting Method	Improved Lotter's Method
Closed Channel Weighting Method	Horton's Method

Results		
Mannings Coefficient	0.015	
Water Surface Elevation	0.37	ft
Elevation Range	0.00 to 0.63	
Flow Area	6.9	ft²
Wetted Perimeter	37.63	ft
Top Width	37.52	ft
Actual Depth	0.37	ft
Critical Elevation	0.43	ft
Critical Slope	0.005366	ft/ft
Velocity	3.49	ft/s
Velocity Head	0.19	ft
Specific Energy	0.56	ft
Froude Number	1.44	
Flow Type	Supercritical	

Roughness Segments

Start Station	End Station	Mannings Coefficient
0+00	0+05	0.030
0+05	0+10	0.013
0+10	0+41	0.016
0+41	0+45	0.013
0+45	0+50	0.030

Natural Channel Points

Station (ft)	Elevation (ft)
0+00	0.63
0+05	0.39
0+09	0.33
0+10	0.00
0+25	0.32
0+40	0.00
0+41	0.33
0+45	0.39
0+50	0.63

TYP SECTION 4" ROLL CURB - CP20E
Rating Table for Irregular Channel

Project Description	
Worksheet	TYPICAL 4" ROLL CURB STREET SECTION - CP20E
Flow Element	Irregular Channel
Method	Manning's Formula
Solve For	Channel Depth

Input Data	
Slope	0.011800 ft/ft

Options	
Current Roughness Method	Improved Lotter's Method
Open Channel Weighting Method	Improved Lotter's Method
Closed Channel Weighting Method	Horton's Method

Attribute	Minimum	Maximum	Increment
Discharge (cfs)	0.00	24.00	2.00

Discharge (cfs)	Water Surface Elevation (ft)	Velocity (ft/s)	Flow Area (ft²)	Wetted Perimeter (ft)	Top Width (ft)	
0.00	0.00	0.00	0.0	0.00	0.00	
2.00	0.15	1.80	1.1	14.96	14.91	
4.00	0.19	2.14	1.9	19.40	19.33	
6.00	0.23	2.36	2.5	22.58	22.50	
8.00	0.25	2.54	3.1	25.15	25.07	
10.00	0.27	2.69	3.7	27.35	27.26	
12.00	0.29	2.81	4.3	29.28	29.18	← $Q_{10} = 12$ cfs, $d_{10} = 0.29'$
14.00	0.31	2.92	4.8	31.03	30.92	
16.00	0.32	3.04	5.3	32.08	31.97	
18.00	0.34	3.17	5.7	33.12	33.01	
20.00	0.35	3.29	6.1	34.73	34.62	
22.00	0.36	3.40	6.5	36.22	36.11	
24.00	0.37	3.49	6.9	37.63	37.52	← $Q_{100} = 24$ cfs, $d_{100} = 0.37'$

TYP STREET SECTION - 6" VERTICAL CURB CP20F
Worksheet for Irregular Channel

Project Description	
Worksheet	TYPICAL 6" VERTICAL CURB STREET SECTION - CP20F
Flow Element	Irregular Channel
Method	Manning's Formula
Solve For	Channel Depth

Input Data	
Slope	0.003000 ft/ft
Discharge	46.00 cfs

Options	
Current Roughness Method	Improved Lotter's Method
Open Channel Weighting Method	Improved Lotter's Method
Closed Channel Weighting Method	Horton's Method

Results	
Mannings Coefficient	0.014
Water Surface Elevation	0.63 ft
Elevation Range	0.00 to 0.80
Flow Area	15.7 ft²
Wetted Perimeter	43.73 ft
Top Width	42.72 ft
Actual Depth	0.63 ft
Critical Elevation	0.58 ft
Critical Slope	0.004285 ft/ft
Velocity	2.92 ft/s
Velocity Head	0.13 ft
Specific Energy	0.76 ft
Froude Number	0.85
Flow Type	Subcritical

Roughness Segments

Start Station	End Station	Mannings Coefficient
0+00	0+05	0.030
0+05	0+09	0.013
0+09	0+41	0.016
0+41	0+45	0.013
0+45	0+50	0.030

Natural Channel Points

Station (ft)	Elevation (ft)
0+00	0.80
0+05	0.56
0+09	0.50
0+09	0.00
0+25	0.32
0+41	0.00
0+41	0.50
0+45	0.56
0+50	0.80

TYP STREET SECTION - 6" VERTICAL CURB CP20F
Rating Table for Irregular Channel

Project Description	
Worksheet	TYPICAL 6" VERTICAL CURB STREET SECTION - CP20F
Flow Element	Irregular Channel
Method	Manning's Formula
Solve For	Channel Depth

Input Data	
Slope	0.003000 ft/ft

Options	
Current Roughness Method	Improved Lotter's Method
Open Channel Weighting Method	Improved Lotter's Method
Closed Channel Weighting Method	Horton's Method

Attribute	Minimum	Maximum	Increment
Discharge (cfs)	0.00	46.00	2.00

Discharge (cfs)	Water Surface Elevation (ft)	Velocity (ft/s)	Flow Area (ft²)	Wetted Perimeter (ft)	Top Width (ft)
0.00	0.00	0.00	0.0	0.00	0.00
2.00	0.19	1.06	1.9	19.80	19.41
4.00	0.25	1.26	3.2	25.68	25.17
6.00	0.29	1.40	4.3	29.90	29.30
8.00	0.33	1.51	5.3	32.66	32.00
10.00	0.35	1.65	6.0	32.70	32.00
12.00	0.37	1.78	6.7	32.75	32.00
14.00	0.39	1.89	7.4	32.79	32.00
16.00	0.41	1.99	8.0	32.83	32.00
18.00	0.43	2.09	8.6	32.87	32.00
20.00	0.45	2.18	9.2	32.90	32.00
22.00	0.46	2.26	9.7	32.93	32.00
24.00	0.48	2.34	10.3	32.97	32.00
26.00	0.50	2.42	10.8	33.00	32.00
28.00	0.51	2.47	11.4	34.92	33.91
30.00	0.52	2.56	11.7	36.30	35.29
32.00	0.54	2.62	12.2	38.19	37.19
34.00	0.55	2.67	12.7	40.02	39.01
36.00	0.57	2.71	13.3	41.25	40.24
38.00	0.58	2.76	13.8	41.77	40.76
40.00	0.59	2.80	14.3	42.28	41.27
42.00	0.60	2.84	14.8	42.78	41.77
44.00	0.61	2.88	15.3	43.26	42.25
46.00	0.63	2.92	15.7	43.73	42.72

$Q_{10} = 21$ cfs, $d_{10} = 0.46'$

$Q_{100} = 46$ cfs, $d_{100} = 0.63'$

TYP STREET SECTION - 6" VERTICAL CURB CP20G
Worksheet for Irregular Channel

Project Description	
Worksheet	TYPICAL 6" VERTICAL CURB STREET SECTION - CP20G
Flow Element	Irregular Channel
Method	Manning's Formula
Solve For	Channel Depth

Input Data	
Slope	0.003000 ft/ft
Discharge	51.60 cfs

Options	
Current Roughness Method	Improved Lotter's Method
Open Channel Weighting Method	Improved Lotter's Method
Closed Channel Weighting Method	Horton's Method

Results	
Mannings Coefficient	0.014
Water Surface Elevation	0.66 ft
Elevation Range	0.00 to 0.80
Flow Area	17.1 ft²
Wetted Perimeter	45.00 ft
Top Width	43.99 ft
Actual Depth	0.66 ft
Critical Elevation	0.61 ft
Critical Slope	0.004200 ft/ft
Velocity	3.02 ft/s
Velocity Head	0.14 ft
Specific Energy	0.80 ft
Froude Number	0.86
Flow Type	Subcritical

Roughness Segments

Start Station	End Station	Mannings Coefficient
0+00	0+05	0.030
0+05	0+09	0.013
0+09	0+41	0.016
0+41	0+45	0.013
0+45	0+50	0.030

Natural Channel Points

Station (ft)	Elevation (ft)
0+00	0.80
0+05	0.56
0+09	0.50
0+09	0.00
0+25	0.32
0+41	0.00
0+41	0.50
0+45	0.56
0+50	0.80

TYP STREET SECTION - 6" VERTICAL CURB CP20G
Worksheet for Irregular Channel

Notes:
Total Q = Q(Rational CP20G) - Q(Intercepted CP20F)

10-yr Q = 30 cfs - 9.4 cfs = 20.6 cfs

100-yr Q = 65 cfs - 13.4 cfs = 51.6 cfs

TYP STREET SECTION - 6" VERTICAL CURB CP20G
Rating Table for Irregular Channel

Project Description	
Worksheet	TYPICAL 6" VERTICAL CURB STREET SECTION - CP20G
Flow Element	Irregular Channel
Method	Manning's Formula
Solve For	Channel Depth

Input Data	
Slope	0.003000 ft/ft

Options	
Current Roughness Method	Improved Lotter's Method
Open Channel Weighting Method	Improved Lotter's Method
Closed Channel Weighting Method	Horton's Method

Attribute	Minimum	Maximum	Increment
Discharge (cfs)	0.00	52.00	2.00

Discharge (cfs)	Water Surface Elevation (ft)	Velocity (ft/s)	Flow Area (ft²)	Wetted Perimeter (ft)	Top Width (ft)
0.00	0.00	0.00	0.0	0.00	0.00
2.00	0.19	1.06	1.9	19.80	19.41
4.00	0.25	1.26	3.2	25.68	25.17
6.00	0.29	1.40	4.3	29.90	29.30
8.00	0.33	1.51	5.3	32.66	32.00
10.00	0.35	1.65	6.0	32.70	32.00
12.00	0.37	1.78	6.7	32.75	32.00
14.00	0.39	1.89	7.4	32.79	32.00
16.00	0.41	1.99	8.0	32.83	32.00
18.00	0.43	2.09	8.6	32.87	32.00
20.00	0.45	2.18	9.2	32.90	32.00
22.00	0.46	2.26	9.7	32.93	32.00
24.00	0.48	2.34	10.3	32.97	32.00
26.00	0.50	2.42	10.8	33.00	32.00
28.00	0.51	2.47	11.4	34.92	33.91
30.00	0.52	2.56	11.7	36.30	35.29
32.00	0.54	2.62	12.2	38.19	37.19
34.00	0.55	2.67	12.7	40.02	39.01
36.00	0.57	2.71	13.3	41.25	40.24
38.00	0.58	2.76	13.8	41.77	40.76
40.00	0.59	2.80	14.3	42.28	41.27
42.00	0.60	2.84	14.8	42.78	41.77
44.00	0.61	2.88	15.3	43.26	42.25
46.00	0.63	2.92	15.7	43.73	42.72
48.00	0.64	2.96	16.2	44.19	43.18
50.00	0.65	3.00	16.7	44.65	43.63
52.00	0.66	3.03	17.2	45.09	44.07

$Q_{10} = 20.6$ cfs
$d_{10} = 0.45'$

$Q_{100} = 51.6$ cfs
$d_{100} = 0.66'$

TYP STREET SECTION - 6" VERTICAL CURB CP20H
Worksheet for Irregular Channel

Project Description	
Worksheet	TYPICAL 6" VERTICAL CURB STREET SECTION - CP20H
Flow Element	Irregular Channel
Method	Manning's Formula
Solve For	Channel Depth

Input Data	
Slope	0.003600 ft/ft
Discharge	29.40 cfs

Options	
Current Roughness Method	Improved Lotter's Method
Open Channel Weighting Method	Improved Lotter's Method
Closed Channel Weighting Method	Horton's Method

Results	
Mannings Coefficient	0.016
Water Surface Elevation	0.50 ft
Elevation Range	0.00 to 0.80
Flow Area	11.0 ft²
Wetted Perimeter	33.46 ft
Top Width	32.46 ft
Actual Depth	0.50 ft
Critical Elevation	0.46 ft
Critical Slope	0.005709 ft/ft
Velocity	2.68 ft/s
Velocity Head	0.11 ft
Specific Energy	0.61 ft
Froude Number	0.81
Flow Type	Subcritical

Roughness Segments

Start Station	End Station	Mannings Coefficient
0+00	0+05	0.030
0+05	0+09	0.013
0+09	0+41	0.016
0+41	0+45	0.013
0+45	0+50	0.030

Natural Channel Points

Station (ft)	Elevation (ft)
0+00	0.80
0+05	0.56
0+09	0.50
0+09	0.00
0+25	0.32
0+41	0.00
0+41	0.50
0+45	0.56
0+50	0.80

TYP STREET SECTION - 6" VERTICAL CURB CP20H
Worksheet for Irregular Channel

Notes:
Total Q = Q(Rational CP20H) - Q(Intercepted CP20C) - Q(Intercepted CP20G)

10-yr Q = 28 cfs - 19.6 cfs - 0 cfs = 8.4 cfs

100-yr Q = 59 cfs - 29 cfs - 0.6 cfs = 29.4 cfs

TYP STREET SECTION - 6" VERTICAL CURB CP20H
Rating Table for Irregular Channel

Project Description	
Worksheet	TYPICAL 6" VERTICAL CURB STREET SECTION - CP20H
Flow Element	Irregular Channel
Method	Manning's Formula
Solve For	Channel Depth

Input Data	
Slope	0.003600 ft/ft

Options	
Current Roughness Method	Improved Lotter's Method
Open Channel Weighting Method	Improved Lotter's Method
Closed Channel Weighting Method	Horton's Method

Attribute	Minimum	Maximum	Increment
Discharge (cfs)	0.00	30.00	2.00

Discharge (cfs)	Water Surface Elevation (ft)	Velocity (ft/s)	Flow Area (ft²)	Wetted Perimeter (ft)	Top Width (ft)	
0.00	0.00	0.00	0.0	0.00	0.00	
2.00	0.19	1.14	1.8	19.14	18.76	
4.00	0.24	1.35	3.0	24.82	24.32	
6.00	0.28	1.50	4.0	28.89	28.32	
8.00	0.32	1.61	5.0	32.18	31.54	
10.00	0.34	1.75	5.7	32.68	32.00	$Q_{10} = 8.4$ cfs, $d_{10} = 0.32'$
12.00	0.36	1.88	6.4	32.73	32.00	
14.00	0.38	2.00	7.0	32.76	32.00	
16.00	0.40	2.11	7.6	32.80	32.00	
18.00	0.41	2.21	8.2	32.84	32.00	
20.00	0.43	2.30	8.7	32.87	32.00	
22.00	0.45	2.39	9.2	32.90	32.00	
24.00	0.46	2.47	9.7	32.93	32.00	
26.00	0.48	2.55	10.2	32.96	32.00	
28.00	0.49	2.63	10.6	32.99	32.00	$Q_{100} = 29.4$ cfs, $d_{100} = 0.50'$
30.00	0.51	2.69	11.2	34.16	33.15	

4" ROLL CURB - CP24A*
Worksheet for Irregular Channel

Project Description	
Worksheet	4" ROLL CURB STREET SECTION - CP24A*
Flow Element	Irregular Channel
Method	Manning's Formula
Solve For	Channel Depth

Input Data		
Slope	0.014600	ft/ft
Discharge	15.00	cfs

Options	
Current Roughness Method	Improved Lotter's Method
Open Channel Weighting Method	Improved Lotter's Method
Closed Channel Weighting Method	Horton's Method

Results		
Mannings Coefficient	0.016	
Water Surface Elevation	0.31	ft
Elevation Range	0.00 to 0.63	
Flow Area	4.7	ft²
Wetted Perimeter	30.59	ft
Top Width	30.49	ft
Actual Depth	0.31	ft
Critical Elevation	0.36	ft
Critical Slope	0.006576	ft/ft
Velocity	3.22	ft/s
Velocity Head	0.16	ft
Specific Energy	0.47	ft
Froude Number	1.45	
Flow Type	Supercritical	

Calculation Messages:
Flow is divided.

Roughness Segments

Start Station	End Station	Mannings Coefficient
0+00	0+05	0.030
0+05	0+10	0.013
0+10	0+41	0.016
0+41	0+45	0.013
0+45	0+50	0.030

Natural Channel Points

Station (ft)	Elevation (ft)
0+00	0.63
0+05	0.39
0+09	0.33
0+10	0.00
0+25	0.32

4" ROLL CURB - CP24A*
Worksheet for Irregular Channel

Natural Channel Points	
Station (ft)	Elevation (ft)
0+40	0.00
0+41	0.33
0+45	0.39
0+50	0.63

4" ROLL CURB - CP24A*
Rating Table for Irregular Channel

Project Description	
Worksheet	4" ROLL CURB STREET SECTION - CP24A*
Flow Element	Irregular Channel
Method	Manning's Formula
Solve For	Channel Depth

Input Data	
Slope	0.014600 ft/ft

Options	
Current Roughness Method	Improved Lotter's Method
Open Channel Weighting Method	Improved Lotter's Method
Closed Channel Weighting Method	Horton's Method

Attribute	Minimum	Maximum	Increment
Discharge (cfs)	1.00	31.00	2.00

Discharge (cfs)	Water Surface Elevation (ft)	Velocity (ft/s)	Flow Area (ft²)	Wetted Perimeter (ft)	Top Width (ft)	
1.00	0.11	1.64	0.6	11.08	11.04	
3.00	0.17	2.15	1.4	16.73	16.67	
5.00	0.20	2.45	2.0	20.26	20.19	
7.00	0.23	2.66	2.6	22.99	22.91	
9.00	0.25	2.83	3.2	25.26	25.17	
11.00	0.27	2.98	3.7	27.24	27.14	
13.00	0.29	3.11	4.2	29.00	28.90	
15.00	0.31	3.22	4.7	30.59	30.49	$Q_{10} = 15$ cfs, $d_{10} = 0.31'$
17.00	0.32	3.32	5.1	32.05	31.94	
19.00	0.33	3.47	5.5	32.32	32.20	
21.00	0.34	3.58	5.9	33.85	33.74	
23.00	0.35	3.70	6.2	35.25	35.13	
25.00	0.36	3.80	6.6	36.56	36.45	
27.00	0.37	3.90	6.9	37.82	37.70	
29.00	0.38	3.99	7.3	39.01	38.90	
31.00	0.39	4.08	7.6	40.13	40.01	$Q_{100} = 31$ cfs, $d_{100} = 0.39$

TYP STREET SECTION - 6" VERTICAL CURB CP24A
Worksheet for Irregular Channel

Project Description	
Worksheet	6" VERTICAL CURB STREET SECTION - CP24A
Flow Element	Irregular Channel
Method	Manning's Formula
Solve For	Channel Depth

Input Data	
Slope	0.003600 ft/ft
Discharge	36.00 cfs

Options	
Current Roughness Method	Improved Lotter's Method
Open Channel Weighting Method	Improved Lotter's Method
Closed Channel Weighting Method	Horton's Method

Results	
Mannings Coefficient	0.014
Water Surface Elevation	0.54 ft
Elevation Range	0.00 to 0.80
Flow Area	12.4 ft²
Wetted Perimeter	38.99 ft
Top Width	37.98 ft
Actual Depth	0.54 ft
Critical Elevation	0.50 ft
Critical Slope	0.004514 ft/ft
Velocity	2.89 ft/s
Velocity Head	0.13 ft
Specific Energy	0.67 ft
Froude Number	0.89
Flow Type	Subcritical

Roughness Segments

Start Station	End Station	Mannings Coefficient
0+00	0+05	0.030
0+05	0+09	0.013
0+09	0+41	0.016
0+41	0+45	0.013
0+45	0+50	0.030

Natural Channel Points

Station (ft)	Elevation (ft)
0+00	0.80
0+05	0.56
0+09	0.50
0+09	0.00
0+25	0.32
0+41	0.00
0+41	0.50
0+45	0.56
0+50	0.80

TYP STREET SECTION - 6" VERTICAL CURB CP24A
Rating Table for Irregular Channel

Project Description	
Worksheet	6" VERTICAL CURB STREET SECTION - CP24A
Flow Element	Irregular Channel
Method	Manning's Formula
Solve For	Channel Depth

Input Data	
Slope	0.003600 ft/ft

Options	
Current Roughness Method	Improved Lotter's Method
Open Channel Weighting Method	Improved Lotter's Method
Closed Channel Weighting Method	Horton's Method

Attribute	Minimum	Maximum	Increment
Discharge (cfs)	1.00	37.00	2.00

Discharge (cfs)	Water Surface Elevation (ft)	Velocity (ft/s)	Flow Area (ft²)	Wetted Perimeter (ft)	Top Width (ft)	
1.00	0.14	0.96	1.0	14.76	14.46	
3.00	0.22	1.26	2.4	22.28	21.84	
5.00	0.26	1.43	3.5	26.98	26.45	
7.00	0.30	1.56	4.5	30.61	30.00	
9.00	0.33	1.68	5.4	32.66	32.00	
11.00	0.35	1.81	6.1	32.71	32.00	
13.00	0.37	1.94	6.7	32.75	32.00	
15.00	0.39	2.05	7.3	32.78	32.00	
17.00	0.41	2.16	7.9	32.82	32.00	$Q_{10} = 17$ cfs
19.00	0.42	2.25	8.4	32.85	32.00	$d_{10} = 0.41'$
21.00	0.44	2.35	9.0	32.89	32.00	
23.00	0.46	2.43	9.5	32.92	32.00	
25.00	0.47	2.51	9.9	32.95	32.00	
27.00	0.49	2.59	10.4	32.98	32.00	
29.00	0.50	2.67	10.9	33.01	32.00	
31.00	0.52	2.72	11.4	35.07	34.06	
33.00	0.53	2.81	11.7	36.42	35.41	
35.00	0.54	2.87	12.2	38.15	37.14	$Q_{100} = 36$ cfs
37.00	0.55	2.92	12.7	39.82	38.81	$d_{100} = 0.54$

4" ROLL CURB - CP24B*
Worksheet for Irregular Channel

Project Description	
Worksheet	4" ROLL CURB STREET SECTION - CP24B*
Flow Element	Irregular Channel
Method	Manning's Formula
Solve For	Channel Depth

Input Data		
Slope	0.015000	ft/ft
Discharge	19.00	cfs

Options	
Current Roughness Method	Improved Lotter's Method
Open Channel Weighting Method	Improved Lotter's Method
Closed Channel Weighting Method	Horton's Method

Results		
Mannings Coefficient	0.016	
Water Surface Elevation	0.33	ft
Elevation Range	0.00 to 0.63	
Flow Area	5.4	ft²
Wetted Perimeter	32.11	ft
Top Width	32.00	ft
Actual Depth	0.33	ft
Critical Elevation	0.39	ft
Critical Slope	0.006413	ft/ft
Velocity	3.50	ft/s
Velocity Head	0.19	ft
Specific Energy	0.52	ft
Froude Number	1.50	
Flow Type	Supercritical	

Roughness Segments

Start Station	End Station	Mannings Coefficient
0+00	0+05	0.030
0+05	0+10	0.013
0+10	0+41	0.016
0+41	0+45	0.013
0+45	0+50	0.030

Natural Channel Points

Station (ft)	Elevation (ft)
0+00	0.63
0+05	0.39
0+09	0.33
0+10	0.00
0+25	0.32
0+40	0.00
0+41	0.33
0+45	0.39
0+50	0.63

4" ROLL CURB - CP24B*
Rating Table for Irregular Channel

Project Description	
Worksheet	4" ROLL CURB STREET SECTION - CP24B*
Flow Element	Irregular Channel
Method	Manning's Formula
Solve For	Channel Depth

Input Data	
Slope	0.015000 ft/ft

Options	
Current Roughness Method	Improved Lotter's Method
Open Channel Weighting Method	Improved Lotter's Method
Closed Channel Weighting Method	Horton's Method

Attribute	Minimum	Maximum	Increment
Discharge (cfs)	1.00	41.00	2.00

Discharge (cfs)	Water Surface Elevation (ft)	Velocity (ft/s)	Flow Area (ft²)	Wetted Perimeter (ft)	Top Width (ft)	
1.00	0.11	1.65	0.6	11.03	10.99	
3.00	0.17	2.18	1.4	16.65	16.59	
5.00	0.20	2.47	2.0	20.16	20.09	
7.00	0.23	2.69	2.6	22.87	22.79	
9.00	0.25	2.86	3.1	25.13	25.05	
11.00	0.27	3.01	3.7	27.10	27.01	
13.00	0.29	3.14	4.1	28.85	28.75	
15.00	0.30	3.25	4.6	30.44	30.34	
17.00	0.32	3.36	5.1	31.90	31.79	
19.00	0.33	3.50	5.4	32.11	32.00	$Q_{10} = 19$ cfs, $d_{10} = 0.33'$
21.00	0.34	3.62	5.8	33.64	33.53	
23.00	0.35	3.73	6.2	35.04	34.92	
25.00	0.36	3.84	6.5	36.35	36.23	
27.00	0.37	3.94	6.9	37.59	37.48	
29.00	0.38	4.03	7.2	38.78	38.67	
31.00	0.39	4.11	7.5	39.93	39.81	
33.00	0.40	4.20	7.9	40.39	40.27	
35.00	0.40	4.29	8.2	40.71	40.60	
37.00	0.41	4.37	8.5	41.02	40.91	
39.00	0.42	4.45	8.8	41.33	41.21	$Q_{100} = 40$ cfs, $d_{100} = 0.42'$
41.00	0.43	4.52	9.1	41.62	41.51	

TYP STREET SECTION - 6" VERTICAL CURB CP24B
Worksheet for Irregular Channel

Project Description	
Worksheet	TYPICAL 6" VERTICAL CURB STREET SECTION - CP24B
Flow Element	Irregular Channel
Method	Manning's Formula
Solve For	Channel Depth

Input Data		
Slope	0.003600	ft/ft
Discharge	58.40	cfs

Options	
Current Roughness Method	Improved Lotter's Method
Open Channel Weighting Method	Improved Lotter's Method
Closed Channel Weighting Method	Horton's Method

Results		
Mannings Coefficient	0.014	
Water Surface Elevation	0.66	ft
Elevation Range	0.00 to 0.80	
Flow Area	17.5	ft²
Wetted Perimeter	45.37	ft
Top Width	44.36	ft
Actual Depth	0.66	ft
Critical Elevation	0.65	ft
Critical Slope	0.004112	ft/ft
Velocity	3.35	ft/s
Velocity Head	0.17	ft
Specific Energy	0.84	ft
Froude Number	0.94	
Flow Type	Subcritical	

Roughness Segments

Start Station	End Station	Mannings Coefficient
0+00	0+05	0.030
0+05	0+09	0.013
0+09	0+41	0.016
0+41	0+45	0.013
0+45	0+50	0.030

Natural Channel Points

Station (ft)	Elevation (ft)
0+00	0.80
0+05	0.56
0+09	0.50
0+09	0.00
0+25	0.32
0+41	0.00
0+41	0.50
0+45	0.56
0+50	0.80

TYP STREET SECTION - 6" VERTICAL CURB CP24B
Worksheet for Irregular Channel

Notes: Total Q = Q(rational CP24B) - Q(intercepted CP24A)

10-yr Q = 36 - 11.8 = 24.2 cfs
100-yr Q = 76 - 17.6 = 58.4 cfs

TYP STREET SECTION - 6" VERTICAL CURB CP24B
Rating Table for Irregular Channel

Project Description	
Worksheet	TYPICAL 6" VERTICAL CURB STREET SECTION - CP24B
Flow Element	Irregular Channel
Method	Manning's Formula
Solve For	Channel Depth

Input Data	
Slope	0.003600 ft/ft

Options	
Current Roughness Method	Improved Lotter's Method
Open Channel Weighting Method	Improved Lotter's Method
Closed Channel Weighting Method	Horton's Method

Attribute	Minimum	Maximum	Increment
Discharge (cfs)	1.00	59.00	2.00

Discharge (cfs)	Water Surface Elevation (ft)	Velocity (ft/s)	Flow Area (ft^2)	Wetted Perimeter (ft)	Top Width (ft)	
1.00	0.14	0.96	1.0	14.76	14.46	
3.00	0.22	1.26	2.4	22.28	21.84	
5.00	0.26	1.43	3.5	26.98	26.45	
7.00	0.30	1.56	4.5	30.61	30.00	
9.00	0.33	1.68	5.4	32.66	32.00	
11.00	0.35	1.81	6.1	32.71	32.00	
13.00	0.37	1.94	6.7	32.75	32.00	
15.00	0.39	2.05	7.3	32.78	32.00	
17.00	0.41	2.16	7.9	32.82	32.00	
19.00	0.42	2.25	8.4	32.85	32.00	
21.00	0.44	2.35	9.0	32.89	32.00	
23.00	0.46	2.43	9.5	32.92	32.00	
25.00	0.47	2.51	9.9	32.95	32.00	$Q_{10} = 24.2$ cf
27.00	0.49	2.59	10.4	32.98	32.00	$d_{10} = 0.47'$
29.00	0.50	2.67	10.9	33.01	32.00	
31.00	0.52	2.72	11.4	35.07	34.06	
33.00	0.53	2.81	11.7	36.42	35.41	
35.00	0.54	2.87	12.2	38.15	37.14	
37.00	0.55	2.92	12.7	39.82	38.81	
39.00	0.56	2.96	13.2	41.14	40.13	
41.00	0.57	3.01	13.6	41.62	40.61	
43.00	0.59	3.05	14.1	42.09	41.08	
45.00	0.60	3.09	14.5	42.55	41.54	
47.00	0.61	3.13	15.0	43.00	41.99	
49.00	0.62	3.17	15.4	43.44	42.43	
51.00	0.63	3.21	15.9	43.86	42.85	
53.00	0.64	3.25	16.3	44.28	43.27	
55.00	0.65	3.29	16.7	44.69	43.68	
57.00	0.66	3.32	17.2	45.09	44.08	$Q_{100} = 58.4$
59.00	0.67	3.36	17.6	45.49	44.48	$d_{100} = 0.66'$

4" ROLL CURB - CP24C*
Worksheet for Irregular Channel

Project Description	
Worksheet	4" ROLL CURB STREET SECTION - CP24C*
Flow Element	Irregular Channel
Method	Manning's Formula
Solve For	Channel Depth

Input Data		
Slope	0.008000	ft/ft
Discharge	4.00	cfs

Options	
Current Roughness Method	Improved Lotter's Method
Open Channel Weighting Method	Improved Lotter's Method
Closed Channel Weighting Method	Horton's Method

Results		
Mannings Coefficient	0.016	
Water Surface Elevation	0.21	ft
Elevation Range	0.00 to 0.63	
Flow Area	2.2	ft²
Wetted Perimeter	20.86	ft
Top Width	20.79	ft
Actual Depth	0.21	ft
Critical Elevation	0.21	ft
Critical Slope	0.007848	ft/ft
Velocity	1.85	ft/s
Velocity Head	0.05	ft
Specific Energy	0.26	ft
Froude Number	1.01	
Flow Type	Supercritical	

Calculation Messages:
Flow is divided.

Roughness Segments

Start Station	End Station	Mannings Coefficient
0+00	0+05	0.030
0+05	0+10	0.013
0+10	0+41	0.016
0+41	0+45	0.013
0+45	0+50	0.030

Natural Channel Points

Station (ft)	Elevation (ft)
0+00	0.63
0+05	0.39
0+09	0.33
0+10	0.00
0+25	0.32

4" ROLL CURB - CP24C*
Worksheet for Irregular Channel

Natural Channel Points	
Station (ft)	Elevation (ft)
0+40	0.00
0+41	0.33
0+45	0.39
0+50	0.63

4" ROLL CURB - CP24C*
Rating Table for Irregular Channel

Project Description	
Worksheet	4" ROLL CURB STREET SECTION - CP24C*
Flow Element	Irregular Channel
Method	Manning's Formula
Solve For	Channel Depth

Input Data	
Slope	0.008000 ft/ft

Options	
Current Roughness Method	Improved Lotter's Method
Open Channel Weighting Method	Improved Lotter's Method
Closed Channel Weighting Method	Horton's Method

Attribute	Minimum	Maximum	Increment
Discharge (cfs)	1.00	9.00	0.50

Discharge (cfs)	Water Surface Elevation (ft)	Velocity (ft/s)	Flow Area (ft²)	Wetted Perimeter (ft)	Top Width (ft)	
1.00	0.12	1.31	0.8	12.41	12.36	
1.50	0.14	1.45	1.0	14.44	14.39	
2.00	0.16	1.55	1.3	16.09	16.03	
2.50	0.17	1.64	1.5	17.49	17.43	
3.00	0.19	1.72	1.7	18.73	18.67	
3.50	0.20	1.79	2.0	19.84	19.78	
4.00	0.21	1.85	2.2	20.86	20.79	$Q_{10} = 4$ cfs, $d_{10} = 0.21$
4.50	0.22	1.90	2.4	21.80	21.73	
5.00	0.23	1.95	2.6	22.68	22.61	
5.50	0.23	2.00	2.7	23.51	23.43	
6.00	0.24	2.04	2.9	24.29	24.21	
6.50	0.25	2.09	3.1	25.03	24.94	
7.00	0.26	2.12	3.3	25.73	25.65	
7.50	0.26	2.16	3.5	26.41	26.32	
8.00	0.27	2.20	3.6	27.06	26.96	$Q_{100} = 8$ cfs, $d_{100} = 0.27$
8.50	0.28	2.23	3.8	27.68	27.58	
9.00	0.28	2.26	4.0	28.28	28.18	

4" ROLL CURB - CP24C**
Worksheet for Irregular Channel

Project Description	
Worksheet	4" ROLL CURB STREET SECTION - CP24C**
Flow Element	Irregular Channel
Method	Manning's Formula
Solve For	Channel Depth

Input Data		
Slope	0.021600	ft/ft
Discharge	14.00	cfs

Options	
Current Roughness Method	Improved Lotter's Method
Open Channel Weighting Method	Improved Lotter's Method
Closed Channel Weighting Method	Horton's Method

Results		
Mannings Coefficient	0.016	
Water Surface Elevation	0.28	ft
Elevation Range	0.00 to 0.63	
Flow Area	3.8	ft²
Wetted Perimeter	27.70	ft
Top Width	27.61	ft
Actual Depth	0.28	ft
Critical Elevation	0.34	ft
Critical Slope	0.006619	ft/ft
Velocity	3.67	ft/s
Velocity Head	0.21	ft
Specific Energy	0.49	ft
Froude Number	1.74	
Flow Type	Supercritical	

Calculation Messages:
Flow is divided.

Roughness Segments		
Start Station	End Station	Mannings Coefficient
0+00	0+05	0.030
0+05	0+10	0.013
0+10	0+41	0.016
0+41	0+45	0.013
0+45	0+50	0.030

Natural Channel Points	
Station (ft)	Elevation (ft)
0+00	0.63
0+05	0.39
0+09	0.33
0+10	0.00
0+25	0.32

4" ROLL CURB - CP24C**
Worksheet for Irregular Channel

Natural Channel Points	
Station (ft)	Elevation (ft)
0+40	0.00
0+41	0.33
0+45	0.39
0+50	0.63

TYP STREET SECTION - 6" VERTICAL CURB CP24C
Worksheet for Irregular Channel

Project Description	
Worksheet	TYPICAL 6" VERTICAL CURB STREET SECTION - CP24C
Flow Element	Irregular Channel
Method	Manning's Formula
Solve For	Channel Depth

Input Data		
Slope	0.003600	ft/ft
Discharge	53.20	cfs

Options	
Current Roughness Method	Improved Lotter's Method
Open Channel Weighting Method	Improved Lotter's Method
Closed Channel Weighting Method	Horton's Method

Results		
Mannings Coefficient	0.014	
Water Surface Elevation	0.64	ft
Elevation Range	0.00 to 0.80	
Flow Area	16.4	ft²
Wetted Perimeter	44.32	ft
Top Width	43.31	ft
Actual Depth	0.64	ft
Critical Elevation	0.62	ft
Critical Slope	0.004179	ft/ft
Velocity	3.25	ft/s
Velocity Head	0.16	ft
Specific Energy	0.80	ft
Froude Number	0.93	
Flow Type	Subcritical	

Roughness Segments

Start Station	End Station	Mannings Coefficient
0+00	0+05	0.030
0+05	0+09	0.013
0+09	0+41	0.016
0+41	0+45	0.013
0+45	0+50	0.030

Natural Channel Points

Station (ft)	Elevation (ft)
0+00	0.80
0+05	0.56
0+09	0.50
0+09	0.00
0+25	0.32
0+41	0.00
0+41	0.50
0+45	0.56
0+50	0.80

TYP STREET SECTION - 6" VERTICAL CURB CP24C
Worksheet for Irregular Channel

Notes: Total Q = Q(rational CP24C) - Q(intercepted CP24A) - Q(intercepted CP24B)

10-yr Q = 49 - 11.8 - 20.8 = 16.4 cfs
100-yr Q = 106 - 17.6 - 35.2 = 53.2 cfs

TYP STREET SECTION - 6" VERTICAL CURB CP24C
Rating Table for Irregular Channel

Project Description	
Worksheet	TYPICAL 6" VERTICAL CURB STREET SECTION - CP24C
Flow Element	Irregular Channel
Method	Manning's Formula
Solve For	Channel Depth

Input Data	
Slope	0.003600 ft/ft

Options	
Current Roughness Method	Improved Lotter's Method
Open Channel Weighting Method	Improved Lotter's Method
Closed Channel Weighting Method	Horton's Method

Attribute	Minimum	Maximum	Increment
Discharge (cfs)	1.00	55.00	2.00

Discharge (cfs)	Water Surface Elevation (ft)	Velocity (ft/s)	Flow Area (ft²)	Wetted Perimeter (ft)	Top Width (ft)
1.00	0.14	0.96	1.0	14.76	14.46
3.00	0.22	1.26	2.4	22.28	21.84
5.00	0.26	1.43	3.5	26.98	26.45
7.00	0.30	1.56	4.5	30.61	30.00
9.00	0.33	1.68	5.4	32.66	32.00
11.00	0.35	1.81	6.1	32.71	32.00
13.00	0.37	1.94	6.7	32.75	32.00
15.00	0.39	2.05	7.3	32.78	32.00
17.00	0.41	2.16	7.9	32.82	32.00
19.00	0.42	2.25	8.4	32.85	32.00
21.00	0.44	2.35	9.0	32.89	32.00
23.00	0.46	2.43	9.5	32.92	32.00
25.00	0.47	2.51	9.9	32.95	32.00
27.00	0.49	2.59	10.4	32.98	32.00
29.00	0.50	2.67	10.9	33.01	32.00
31.00	0.52	2.72	11.4	35.07	34.06
33.00	0.53	2.81	11.7	36.42	35.41
35.00	0.54	2.87	12.2	38.15	37.14
37.00	0.55	2.92	12.7	39.82	38.81
39.00	0.56	2.96	13.2	41.14	40.13
41.00	0.57	3.01	13.6	41.62	40.61
43.00	0.59	3.05	14.1	42.09	41.08
45.00	0.60	3.09	14.5	42.55	41.54
47.00	0.61	3.13	15.0	43.00	41.99
49.00	0.62	3.17	15.4	43.44	42.43
51.00	0.63	3.21	15.9	43.86	42.85
53.00	0.64	3.25	16.3	44.28	43.27
55.00	0.65	3.29	16.7	44.69	43.68

$Q_{10} = 16.4$ cfs
$d_{10} = 0.40'$

$Q_{100} = 53.2$ cfs
$d_{100} = 0.65'$

4" ROLL CURB - CP24D*
Worksheet for Irregular Channel

Project Description	
Worksheet	4" ROLL CURB STREET SECTION - CP24D*
Flow Element	Irregular Channel
Method	Manning's Formula
Solve For	Channel Depth

Input Data		
Slope	0.019400	ft/ft
Discharge	18.00	cfs

Options	
Current Roughness Method	Improved Lotter's Method
Open Channel Weighting Method	Improved Lotter's Method
Closed Channel Weighting Method	Horton's Method

Results		
Mannings Coefficient	0.016	
Water Surface Elevation	0.31	ft
Elevation Range	0.00 to 0.63	
Flow Area	4.8	ft²
Wetted Perimeter	31.06	ft
Top Width	30.95	ft
Actual Depth	0.31	ft
Critical Elevation	0.38	ft
Critical Slope	0.006456	ft/ft
Velocity	3.75	ft/s
Velocity Head	0.22	ft
Specific Energy	0.53	ft
Froude Number	1.68	
Flow Type	Supercritical	

Calculation Messages:
Flow is divided.

Roughness Segments

Start Station	End Station	Mannings Coefficient
0+00	0+05	0.030
0+05	0+10	0.013
0+10	0+41	0.016
0+41	0+45	0.013
0+45	0+50	0.030

Natural Channel Points

Station (ft)	Elevation (ft)
0+00	0.63
0+05	0.39
0+09	0.33
0+10	0.00
0+25	0.32

4" ROLL CURB - CP24D*
Worksheet for Irregular Channel

Natural Channel Points	
Station (ft)	Elevation (ft)
0+40	0.00
0+41	0.33
0+45	0.39
0+50	0.63

4" ROLL CURB - CP24D*
Rating Table for Irregular Channel

Project Description	
Worksheet	4" ROLL CURB STREET SECTION - CP24D*
Flow Element	Irregular Channel
Method	Manning's Formula
Solve For	Channel Depth

Input Data	
Slope	0.019400 ft/ft

Options	
Current Roughness Method	Improved Lotter's Method
Open Channel Weighting Method	Improved Lotter's Method
Closed Channel Weighting Method	Horton's Method

Attribute	Minimum	Maximum	Increment
Discharge (cfs)	1.00	39.00	1.00

Discharge (cfs)	Water Surface Elevation (ft)	Velocity (ft/s)	Flow Area (ft²)	Wetted Perimeter (ft)	Top Width (ft)
1.00	0.10	1.82	0.5	10.51	10.47
2.00	0.14	2.17	0.9	13.63	13.58
3.00	0.16	2.40	1.3	15.86	15.81
4.00	0.18	2.57	1.6	17.67	17.61
5.00	0.19	2.72	1.8	19.21	19.15
6.00	0.21	2.85	2.1	20.57	20.50
7.00	0.22	2.96	2.4	21.80	21.72
8.00	0.23	3.06	2.6	22.92	22.84
9.00	0.24	3.15	2.9	23.95	23.87
10.00	0.25	3.24	3.1	24.92	24.83
11.00	0.26	3.32	3.3	25.82	25.73
12.00	0.27	3.39	3.5	26.68	26.59
13.00	0.27	3.46	3.8	27.49	27.40
14.00	0.28	3.52	4.0	28.27	28.17
15.00	0.29	3.58	4.2	29.01	28.91
16.00	0.30	3.64	4.4	29.72	29.62
17.00	0.30	3.70	4.6	30.40	30.30
18.00	0.31	3.75	4.8	31.06	30.95
19.00	0.32	3.80	5.0	31.70	31.59
20.00	0.32	3.86	5.2	32.06	31.95
21.00	0.33	3.94	5.3	32.09	31.98
22.00	0.33	4.00	5.5	32.39	32.27
23.00	0.34	4.06	5.7	33.07	32.96
24.00	0.34	4.12	5.8	33.72	33.61
25.00	0.35	4.18	6.0	34.34	34.23
26.00	0.35	4.23	6.1	34.95	34.83
27.00	0.36	4.29	6.3	35.53	35.42
28.00	0.36	4.34	6.4	36.11	35.99
29.00	0.36	4.39	6.6	36.67	36.55
30.00	0.37	4.44	6.8	37.21	37.10
31.00	0.37	4.49	6.9	37.75	37.64
32.00	0.38	4.54	7.1	38.28	38.16

← $Q_{10} = 18$ cfs
$d_{10} = 0.31'$

4" ROLL CURB - CP24D*
Rating Table for Irregular Channel

Discharge (cfs)	Water Surface Elevation (ft)	Velocity (ft/s)	Flow Area (ft^2)	Wetted Perimeter (ft)	Top Width (ft)
33.00	0.38	4.58	7.2	38.79	38.68
34.00	0.38	4.63	7.3	39.30	39.19
35.00	0.39	4.67	7.5	39.80	39.69
36.00	0.39	4.71	7.6	40.17	40.05
37.00	0.39	4.76	7.8	40.31	40.20
38.00	0.40	4.80	7.9	40.46	40.34
39.00	0.40	4.84	8.1	40.60	40.48

← Q_{100}: 38 cfs
d_{100} = 0.40'

TYP STREET SECTION - 6" VERTICAL CURB CP24D
Worksheet for Irregular Channel

Project Description	
Worksheet	TYPICAL 6" VERTICAL CURB STREET SECTION - CP24D
Flow Element	Irregular Channel
Method	Manning's Formula
Solve For	Channel Depth

Input Data	
Slope	0.011100 ft/ft
Discharge	40.00 cfs

Options	
Current Roughness Method	Improved Lotter's Method
Open Channel Weighting Method	Improved Lotter's Method
Closed Channel Weighting Method	Horton's Method

Results	
Mannings Coefficient	0.016
Water Surface Elevation	0.45 ft
Elevation Range	0.00 to 0.80
Flow Area	9.4 ft²
Wetted Perimeter	32.91 ft
Top Width	32.00 ft
Actual Depth	0.45 ft
Critical Elevation	0.54 ft
Critical Slope	0.005574 ft/ft
Velocity	4.25 ft/s
Velocity Head	0.28 ft
Specific Energy	0.74 ft
Froude Number	1.38
Flow Type	Supercritical

Roughness Segments

Start Station	End Station	Mannings Coefficient
0+00	0+05	0.030
0+05	0+09	0.013
0+09	0+41	0.016
0+41	0+45	0.013
0+45	0+50	0.030

Natural Channel Points

Station (ft)	Elevation (ft)
0+00	0.80
0+05	0.56
0+09	0.50
0+09	0.00
0+25	0.32
0+41	0.00
0+41	0.50
0+45	0.56
0+50	0.80

TYP STREET SECTION - 6" VERTICAL CURB CP24D
Rating Table for Irregular Channel

Project Description	
Worksheet	TYPICAL 6" VERTICAL CURB STREET SECTION - CP24D
Flow Element	Irregular Channel
Method	Manning's Formula
Solve For	Channel Depth

Input Data	
Slope	0.011100 ft/ft

Options	
Current Roughness Method	Improved Lotter's Method
Open Channel Weighting Method	Improved Lotter's Method
Closed Channel Weighting Method	Horton's Method

Attribute	Minimum	Maximum	Increment
Discharge (cfs)	1.00	41.00	2.00

Discharge (cfs)	Water Surface Elevation (ft)	Velocity (ft/s)	Flow Area (ft²)	Wetted Perimeter (ft)	Top Width (ft)
1.00	0.12	1.46	0.7	11.95	11.71
3.00	0.18	1.92	1.6	18.04	17.68
5.00	0.21	2.18	2.3	21.85	21.41
7.00	0.24	2.37	3.0	24.78	24.29
9.00	0.27	2.53	3.6	27.23	26.69
11.00	0.29	2.66	4.1	29.36	28.78
13.00	0.31	2.77	4.7	31.26	30.64
15.00	0.32	2.88	5.2	32.65	32.00
17.00	0.34	3.03	5.6	32.68	32.00
19.00	0.35	3.17	6.0	32.70	32.00
21.00	0.36	3.29	6.4	32.72	32.00
23.00	0.37	3.42	6.7	32.75	32.00
25.00	0.38	3.53	7.1	32.77	32.00
27.00	0.39	3.64	7.4	32.79	32.00
29.00	0.40	3.74	7.7	32.81	32.00
31.00	0.41	3.85	8.1	32.83	32.00
33.00	0.42	3.94	8.4	32.85	32.00
35.00	0.43	4.04	8.7	32.87	32.00
37.00	0.44	4.12	9.0	32.89	32.00
39.00	0.45	4.21	9.3	32.91	32.00
41.00	0.46	4.30	9.5	32.92	32.00

← $Q_{10} = 19$ cfs, $d_{10} = 0.35'$

← $Q_{100} = 40$ cfs, $d_{100} = 0.46'$

4" ROLL CURB - CP25
Worksheet for Irregular Channel

Project Description	
Worksheet	4" ROLL CURB STREET SECTION - CP25
Flow Element	Irregular Channel
Method	Manning's Formula
Solve For	Channel Depth

Input Data	
Slope	0.005600 ft/ft
Discharge	14.00 cfs

Options	
Current Roughness Method	Improved Lotter's Method
Open Channel Weighting Method	Improved Lotter's Method
Closed Channel Weighting Method	Horton's Method

Results	
Mannings Coefficient	0.015
Water Surface Elevation	0.35 ft
Elevation Range	0.00 to 0.63
Flow Area	6.1 ft²
Wetted Perimeter	34.98 ft
Top Width	34.87 ft
Actual Depth	0.35 ft
Critical Elevation	0.34 ft
Critical Slope	0.006155 ft/ft
Velocity	2.28 ft/s
Velocity Head	0.08 ft
Specific Energy	0.43 ft
Froude Number	0.96
Flow Type	Subcritical

Roughness Segments

Start Station	End Station	Mannings Coefficient
0+00	0+05	0.030
0+05	0+10	0.013
0+10	0+41	0.016
0+41	0+45	0.013
0+45	0+50	0.030

Natural Channel Points

Station (ft)	Elevation (ft)
0+00	0.63
0+05	0.39
0+09	0.33
0+10	0.00
0+25	0.32
0+40	0.00
0+41	0.33
0+45	0.39
0+50	0.63

4" ROLL CURB - CP25
Rating Table for Irregular Channel

Project Description	
Worksheet	4" ROLL CURB STREET SECTION - CP25
Flow Element	Irregular Channel
Method	Manning's Formula
Solve For	Channel Depth

Input Data	
Slope	0.005600 ft/ft

Options	
Current Roughness Method	Improved Lotter's Method
Open Channel Weighting Method	Improved Lotter's Method
Closed Channel Weighting Method	Horton's Method

Attribute	Minimum	Maximum	Increment
Discharge (cfs)	1.00	15.00	1.00

Discharge (cfs)	Water Surface Elevation (ft)	Velocity (ft/s)	Flow Area (ft^2)	Wetted Perimeter (ft)	Top Width (ft)	
1.00	0.13	1.14	0.9	13.26	13.22	
2.00	0.17	1.36	1.5	17.20	17.14	
3.00	0.20	1.50	2.0	20.02	19.96	
4.00	0.22	1.62	2.5	22.31	22.23	
5.00	0.24	1.71	2.9	24.25	24.17	
6.00	0.26	1.79	3.4	25.97	25.88	
7.00	0.27	1.86	3.8	27.51	27.42	← $Q_{10} = 7$ cfs, $d_{10} = 0.27'$
8.00	0.29	1.92	4.2	28.93	28.83	
9.00	0.30	1.98	4.5	30.23	30.13	
10.00	0.31	2.03	4.9	31.45	31.34	
11.00	0.32	2.09	5.3	32.08	31.97	
12.00	0.33	2.16	5.6	32.62	32.51	
13.00	0.34	2.22	5.9	33.84	33.73	
14.00	0.35	2.28	6.1	34.98	34.87	← $Q_{100} = 14$ cfs, $d_{100} = 0.35'$
15.00	0.36	2.33	6.4	36.06	35.95	

4" ROLL CURB - CP26
Worksheet for Irregular Channel

Project Description	
Worksheet	4" ROLL CURB STREET SECTION - CP26
Flow Element	Irregular Channel
Method	Manning's Formula
Solve For	Channel Depth

Input Data		
Slope	0.003500	ft/ft
Discharge	5.00	cfs

Options	
Current Roughness Method	Improved Lotter's Method
Open Channel Weighting Method	Improved Lotter's Method
Closed Channel Weighting Method	Horton's Method

Results		
Mannings Coefficient	0.016	
Water Surface Elevation	0.26	ft
Elevation Range	0.00 to 0.63	
Flow Area	3.5	ft²
Wetted Perimeter	26.49	ft
Top Width	26.40	ft
Actual Depth	0.26	ft
Critical Elevation	0.23	ft
Critical Slope	0.007618	ft/ft
Velocity	1.43	ft/s
Velocity Head	0.03	ft
Specific Energy	0.30	ft
Froude Number	0.69	
Flow Type	Subcritical	

Calculation Messages:
Flow is divided.

Roughness Segments

Start Station	End Station	Mannings Coefficient
0+00	0+05	0.030
0+05	0+10	0.013
0+10	0+41	0.016
0+41	0+45	0.013
0+45	0+50	0.030

Natural Channel Points

Station (ft)	Elevation (ft)
0+00	0.63
0+05	0.39
0+09	0.33
0+10	0.00
0+25	0.32

4" ROLL CURB - CP26
Worksheet for Irregular Channel

Natural Channel Points	
Station (ft)	Elevation (ft)
0+40	0.00
0+41	0.33
0+45	0.39
0+50	0.63

4" ROLL CURB - CP26
Rating Table for Irregular Channel

Project Description	
Worksheet	4" ROLL CURB STREET SECTION - CP26
Flow Element	Irregular Channel
Method	Manning's Formula
Solve For	Channel Depth

Input Data	
Slope	0.003500 ft/ft

Options	
Current Roughness Method	Improved Lotter's Method
Open Channel Weighting Method	Improved Lotter's Method
Closed Channel Weighting Method	Horton's Method

Attribute	Minimum	Maximum	Increment
Discharge (cfs)	1.00	6.00	0.50

Discharge (cfs)	Water Surface Elevation (ft)	Velocity (ft/s)	Flow Area (ft²)	Wetted Perimeter (ft)	Top Width (ft)	
1.00	0.14	0.96	1.0	14.49	14.44	
1.50	0.17	1.06	1.4	16.86	16.81	
2.00	0.19	1.14	1.8	18.78	18.72	
2.50	0.20	1.20	2.1	20.42	20.35	
3.00	0.22	1.26	2.4	21.87	21.79	← $Q_{10} = 3$ cfs, $d_{10} = 0.22'$
3.50	0.23	1.31	2.7	23.17	23.09	
4.00	0.24	1.35	3.0	24.36	24.28	
4.50	0.25	1.40	3.2	25.46	25.37	
5.00	0.26	1.43	3.5	26.49	26.40	← $Q_{100} = 5$ cfs, $d_{100} = 0.26'$
5.50	0.27	1.47	3.7	27.45	27.36	
6.00	0.28	1.50	4.0	28.36	28.26	

TYP STREET SECTION - 6" VERTICAL CURB CP27
Worksheet for Irregular Channel

Project Description	
Worksheet	TYPICAL 6" VERTICAL CURB STREET SECTION - CP27
Flow Element	Irregular Channel
Method	Manning's Formula
Solve For	Channel Depth

Input Data	
Slope	0.018000 ft/ft
Discharge	10.00 cfs

Options	
Current Roughness Method	Improved Lotter's Method
Open Channel Weighting Method	Improved Lotter's Method
Closed Channel Weighting Method	Horton's Method

Results	
Mannings Coefficient	0.016
Water Surface Elevation	0.33 ft
Elevation Range	0.00 to 0.80
Flow Area	2.7 ft²
Wetted Perimeter	16.32 ft
Top Width	16.24 ft
Actual Depth	0.33 ft
Critical Elevation	0.40 ft
Critical Slope	0.006322 ft/ft
Velocity	3.75 ft/s
Velocity Head	0.22 ft
Specific Energy	0.55 ft
Froude Number	1.63
Flow Type	Supercritical

Roughness Segments

Start Station	End Station	Mannings Coefficient
0+00	0+06	0.030
0+06	0+11	0.013
0+11	0+30	0.016

Natural Channel Points

Station (ft)	Elevation (ft)
0+00	0.80
0+06	0.56
0+10	0.50
0+11	0.00
0+30	0.40

TYP STREET SECTION - 6" VERTICAL CURB CP27
Rating Table for Irregular Channel

Project Description	
Worksheet	TYPICAL 6" VERTICAL CURB STREET SECTION - CP27
Flow Element	Irregular Channel
Method	Manning's Formula
Solve For	Channel Depth

Input Data	
Slope	0.018000 ft/ft

Options	
Current Roughness Method	Improved Lotter's Method
Open Channel Weighting Method	Improved Lotter's Method
Closed Channel Weighting Method	Horton's Method

Attribute	Minimum	Maximum	Increment
Discharge (cfs)	1.00	11.00	0.50

Discharge (cfs)	Water Surface Elevation (ft)	Velocity (ft/s)	Flow Area (ft²)	Wetted Perimeter (ft)	Top Width (ft)	
1.00	0.14	2.11	0.5	6.88	6.85	
1.50	0.16	2.34	0.6	8.01	7.97	
2.00	0.18	2.51	0.8	8.93	8.88	
2.50	0.20	2.65	0.9	9.70	9.66	
3.00	0.21	2.78	1.1	10.39	10.34	
3.50	0.22	2.89	1.2	11.01	10.96	
4.00	0.23	2.98	1.3	11.58	11.52	
4.50	0.24	3.07	1.5	12.10	12.04	
5.00	0.25	3.16	1.6	12.59	12.53	← $Q_{10} = 5$ cfs, $d_{10} = 0.25'$
5.50	0.26	3.23	1.7	13.04	12.98	
6.00	0.27	3.30	1.8	13.48	13.41	
6.50	0.28	3.37	1.9	13.89	13.82	
7.00	0.29	3.43	2.0	14.28	14.21	
7.50	0.29	3.49	2.1	14.65	14.58	
8.00	0.30	3.55	2.3	15.01	14.94	
8.50	0.31	3.60	2.4	15.36	15.28	
9.00	0.32	3.66	2.5	15.69	15.61	
9.50	0.32	3.70	2.6	16.01	15.93	
10.00	0.33	3.75	2.7	16.32	16.24	← $Q_{100} = 10$ cfs, $d_{100} = 0.33'$
10.50	0.33	3.80	2.8	16.62	16.54	
11.00	0.34	3.85	2.9	16.91	16.83	

```
==========================================================================================
|PAVEMENT DRAINAGE PROGRAM - HEC-12                                              Page   1 |
|Licensed to: David Evans & Associates, Phoenix, AZ  85016                                |
|Project    : DREAMING SUMMIT:CP8B 10-YEAR, FILE:ST718B                                   |
|-----------------------------------------------------------------------------------------|
|Sta                                      INPUT                                           |
|Intens.= 0.00 C1=0.00  A1= 0.00 Qadd   =  8.5    Slope1= 6.0000 Gutter= 2.00 Area  = 0.00|
|CB ID  = 8B   C2=0.00  A2= 0.00 Qrunoff=  8.5    Slope2= 0.0590 a     = 2.00 Perim = 0.00|
|Curb Opening  C3=0.00  A3= 0.00 Grade  =  0.0112 Slope3= 0.0200 W     = 2.00 Length= 3.00|
|.........................................................................................|
|                                         OUTPUT                                          |
|Flowby=  0.0 Qtotal=  8.5 Qint=  1.7 Flowby dn=  6.8 Depth=0.37 Spread= 14.55 Veloc= 3.85|
|-----------------------------------------------------------------------------------------|
|                                       CRITERIA                                          |
|Runoff computed by Rational Method   Manning's n Gutter=0.013  Manning's n Pavement=0.016|
|Clogging Factors in Sag Location:                                                        |
|----- Curb Opening= 1.33 Grate= 2.00 Slotted Drain= 2.00 Comb-Curb= 1.33 Comb-Grate= 2.00|
|Clogging Factors on Continuous Grade:                                                    |
|----- Curb Opening= 1.33 Grate= 2.00 Slotted Drain= 2.00 Comb-Curb= 1.33 Comb-Grate= 2.00|
|-----------------------------------------------------------------------------------------|
|Prepared by:          Date:08/04/99    Time:13:17:03     Checked by:        Date:        |
|Pavement Drainage Program (C), 1991 Copyright by SMF Engineering Corporation, Phoenix, AZ|
==========================================================================================
```

```
|PAVEMENT DRAINAGE PROGRAM - HEC-12                                          Page   1 |
|Licensed to: David Evans & Associates, Phoenix, AZ  85016                              |
|Project    : DREAMING SUMMIT:CP8B 100-YEAR, FILE:ST718B2                               |
|---------------------------------------------------------------------------------------|
|Sta                                        INPUT                                       |
|Intens.= 0.00 C1=0.00  A1= 0.00 Qadd   = 17.5    Slope1= 6.0000 Gutter= 2.00 Area  = 0.00|
|CB ID  = 8B   C2=0.00  A2= 0.00 Qrunoff= 17.5    Slope2= 0.0590 a     = 2.00 Perim = 0.00|
|Curb Opening  C3=0.00  A3= 0.00 Grade  =  0.0112 Slope3= 0.0200 W     = 2.00 Length= 3.00|
|.......................................................................................|
|                                           OUTPUT                                      |
|Flowby=  0.0 Qtotal= 17.5 Qint=  2.3 Flowby dn= 15.2 Depth=0.47 Spread= 19.40 Veloc= 4.53|
|---------------------------------------------------------------------------------------|
|                                          CRITERIA                                     |
|Runoff computed by Rational Method   Manning's n Gutter=0.013  Manning's n Pavement=0.016|
|Clogging Factors in Sag Location:                                                      |
|----- Curb Opening= 1.33 Grate= 2.00 Slotted Drain= 2.00 Comb-Curb= 1.33 Comb-Grate= 2.00|
|Clogging Factors on Continuous Grade:                                                  |
|----- Curb Opening= 1.33 Grate= 2.00 Slotted Drain= 2.00 Comb-Curb= 1.33 Comb-Grate= 2.00|
|---------------------------------------------------------------------------------------|
|Prepared by:         Date:08/04/99    Time:13:21:07     Checked by:        Date:       |
|Pavement Drainage Program (C), 1991 Copyright by SMF Engineering Corporation, Phoenix, AZ|
 =======================================================================================
```

```
|PAVEMENT DRAINAGE PROGRAM - HEC-12                                          Page   1 |
|Licensed to: David Evans & Associates, Phoenix, AZ  85016                              |
|Project    : DREAMING SUMMIT:CP8C 10-YEAR, FILE:ST718C                                 |
|---------------------------------------------------------------------------------------|
|Sta                                        INPUT                                       |
|Intens.= 0.00 C1=0.00  A1= 0.00 Qadd   =  9.5    Slope1= 6.0000 Gutter= 2.00 Area  = 0.00|
|CB ID  = 8C   C2=0.00  A2= 0.00 Qrunoff=  9.5    Slope2= 0.0590 a     = 2.00 Perim = 0.00|
|Curb Opening  C3=0.00  A3= 0.00 Grade  =  0.0036 Slope3= 0.0200 W     = 1.00 Length=27.00|
|.......................................................................................|
|                                           OUTPUT                                      |
|Flowby=  0.0 Qtotal=  9.5 Qint=  9.5 Flowby dn=  0.0 Depth=0.46 Spread= 19.10 Veloc= 2.54|
|---------------------------------------------------------------------------------------|
|                                          CRITERIA                                     |
|Runoff computed by Rational Method   Manning's n Gutter=0.013  Manning's n Pavement=0.016|
|Clogging Factors in Sag Location:                                                      |
|----- Curb Opening= 1.33 Grate= 2.00 Slotted Drain= 2.00 Comb-Curb= 1.33 Comb-Grate= 2.00|
|Clogging Factors on Continuous Grade:                                                  |
|----- Curb Opening= 1.33 Grate= 2.00 Slotted Drain= 2.00 Comb-Curb= 1.33 Comb-Grate= 2.00|
|---------------------------------------------------------------------------------------|
|Prepared by:         Date:08/04/99    Time:14:00:09     Checked by:        Date:       |
|Pavement Drainage Program (C), 1991 Copyright by SMF Engineering Corporation, Phoenix, AZ|
 =======================================================================================
```

```
|PAVEMENT DRAINAGE PROGRAM - HEC-12                                          Page   1 |
|Licensed to: David Evans & Associates, Phoenix, AZ  85016                             |
|Project    : DREAMING SUMMIT:CP8C 100-YEAR, FILE:ST718C2                              |
|--------------------------------------------------------------------------------------|
|Sta                                        INPUT                                      |
|Intens.= 0.00 C1=0.00  A1= 0.00 Qadd   = 20.0    Slope1= 6.0000 Gutter= 2.00 Area  = 0.00|
|CB ID  = 8C   C2=0.00  A2= 0.00 Qrunoff= 20.0    Slope2= 0.0590 a     = 2.00 Perim = 0.00|
|Curb Opening  C3=0.00  A3= 0.00 Grade  =  0.0036 Slope3= 0.0200 W     = 2.00 Length=27.00|
|.....................................................................................|
|                                           OUTPUT                                     |
|Flowby=  0.0 Qtotal= 20.0 Qint= 19.0 Flowby dn=  1.0 Depth=0.59 Spread= 25.55 Veloc= 3.01|
|--------------------------------------------------------------------------------------|
|                                          CRITERIA                                    |
|Runoff computed by Rational Method   Manning's n Gutter=0.013  Manning's n Pavement=0.016|
|Clogging Factors in Sag Location:                                                     |
|----- Curb Opening= 1.33 Grate= 2.00 Slotted Drain= 2.00 Comb-Curb= 1.33 Comb-Grate= 2.00|
|Clogging Factors on Continuous Grade:                                                 |
|----- Curb Opening= 1.33 Grate= 2.00 Slotted Drain= 2.00 Comb-Curb= 1.33 Comb-Grate= 2.00|
|--------------------------------------------------------------------------------------|
|Prepared by:         Date:08/04/99    Time:14:02:23     Checked by:        Date:      |
|Pavement Drainage Program (C), 1991 Copyright by SMF Engineering Corporation, Phoenix, AZ|
 ======================================================================================
```

```
|PAVEMENT DRAINAGE PROGRAM - HEC-12                                          Page   1 |
|Licensed to: David Evans & Associates, Phoenix, AZ  85016                              |
|Project    : DREAMING SUMMIT:CP8F 10-YEAR, FILEST718F                                  |
|-----------------------------------------------------------------------------------------|
|Sta                                          INPUT                                     |
|Intens.= 0.00 C1=0.00  A1= 0.00 Qadd   =  9.5    Slope1= 6.0000 Gutter= 2.00 Area  = 0.00|
|CB ID  = 8F   C2=0.00  A2= 0.00 Qrunoff=  9.5    Slope2= 0.0590 a     = 2.00 Perim = 0.00|
|Curb Opening  C3=0.00  A3= 0.00 Grade  =  0.0100 Slope3= 0.0200 W     = 2.00 Length=17.00|
|.........................................................................................|
|                                             OUTPUT                                    |
|Flowby=  0.0 Qtotal=  9.5 Qint=  6.8 Flowby dn=  2.7 Depth=0.39 Spread= 15.75 Veloc= 3.69|
|-----------------------------------------------------------------------------------------|
|                                           CRITERIA                                    |
|Runoff computed by Rational Method   Manning's n Gutter=0.016  Manning's n Pavement=0.013|
|Clogging Factors in Sag Location:                                                      |
|----- Curb Opening= 1.33 Grate= 2.00 Slotted Drain= 2.00 Comb-Curb= 1.33 Comb-Grate= 2.00|
|Clogging Factors on Continuous Grade:                                                  |
|----- Curb Opening= 1.33 Grate= 2.00 Slotted Drain= 2.00 Comb-Curb= 1.33 Comb-Grate= 2.00|
|-----------------------------------------------------------------------------------------|
|Prepared by:         Date:08/04/99    Time:13:21:37     Checked by:        Date:        |
|Pavement Drainage Program (C), 1991 Copyright by SMF Engineering Corporation, Phoenix, AZ|
=========================================================================================
```

```
|PAVEMENT DRAINAGE PROGRAM - HEC-12                                        Page   1 |
|Licensed to: David Evans & Associates, Phoenix, AZ  85016                            |
|Project    : DREAMING SUMMIT:CP8F 100-YEAR, FILE:ST718F2                             |
|-------------------------------------------------------------------------------------|
|Sta                                      INPUT                                       |
|Intens.= 0.00 C1=0.00  A1= 0.00 Qadd   = 20.0    Slope1= 6.0000 Gutter= 2.00 Area  = 0.00|
|CB ID  = 8F   C2=0.00  A2= 0.00 Qrunoff= 20.0    Slope2= 0.0590 a     = 2.00 Perim = 0.00|
|Curb Opening  C3=0.00  A3= 0.00 Grade  =  0.0100 Slope3= 0.0200 W     = 2.00 Length=17.00|
|.....................................................................................|
|                                         OUTPUT                                      |
|Flowby=  0.0 Qtotal= 20.0 Qint=  9.8 Flowby dn= 10.2 Depth=0.50 Spread= 21.00 Veloc= 4.44|
|-------------------------------------------------------------------------------------|
|                                       CRITERIA                                      |
|Runoff computed by Rational Method   Manning's n Gutter=0.016  Manning's n Pavement=0.013|
|Clogging Factors in Sag Location:                                                    |
|----- Curb Opening= 1.33 Grate= 2.00 Slotted Drain= 2.00 Comb-Curb= 1.33 Comb-Grate= 2.00|
|Clogging Factors on Continuous Grade:                                                |
|----- Curb Opening= 1.33 Grate= 2.00 Slotted Drain= 2.00 Comb-Curb= 1.33 Comb-Grate= 2.00|
|-------------------------------------------------------------------------------------|
|Prepared by:          Date:08/04/99    Time:13:22:37     Checked by:        Date:    |
|Pavement Drainage Program (C), 1991 Copyright by SMF Engineering Corporation, Phoenix, AZ|
 =====================================================================================
```

```
|PAVEMENT DRAINAGE PROGRAM - HEC-12                                        Page   1 |
|Licensed to: David Evans & Associates, Phoenix, AZ  85016                           |
|Project    : DREAMING SUMMIT:CP8G 100-YEAR, FILE:ST718G2                            |
|-----------------------------------------------------------------------------------|
|Sta                                        INPUT                                   |
|Intens.= 0.00 C1=0.00  A1= 0.00 Qadd   = 26.9    Slope1= 6.0000 Gutter= 2.00 Area  = 0.00|
|CB ID  = 8G   C2=0.00  A2= 0.00 Qrunoff= 26.9    Slope2= 0.0590 a     = 2.00 Perim = 0.00|
|Curb Opening  C3=0.00  A3= 0.00 Grade  =  0.0000 Slope3= 0.0200 W     = 2.00 Length=20.00|
|...................................................................................|
|                                           OUTPUT                                  |
|Flowby=  0.0 Qtotal= 26.9 Qint= 26.9 Flowby dn=  0.0 Depth=0.69 Spread= 22.42 Veloc= 0.00|
|-----------------------------------------------------------------------------------|
|                                          CRITERIA                                 |
|Runoff computed by Rational Method   Manning's n Gutter=0.013  Manning's n Pavement=0.016|
|Clogging Factors in Sag Location:                                                  |
|----- Curb Opening= 1.33 Grate= 2.00 Slotted Drain= 2.00 Comb-Curb= 1.33 Comb-Grate= 2.00|
|Clogging Factors on Continuous Grade:                                              |
|----- Curb Opening= 1.33 Grate= 2.00 Slotted Drain= 2.00 Comb-Curb= 1.33 Comb-Grate= 2.00|
|-----------------------------------------------------------------------------------|
|Prepared by:          Date:08/04/99    Time:14:54:45     Checked by:        Date:   |
|Pavement Drainage Program (C), 1991 Copyright by SMF Engineering Corporation, Phoenix, AZ|
 ===================================================================================
```

```
==========================================================================================
|PAVEMENT DRAINAGE PROGRAM - HEC-12                                                Page   1 |
|Licensed to: David Evans & Associates, Phoenix, AZ  85016                                |
|Project    : DREAMING SUMMIT:CP9B 10-YEAR, FILE:ST719B                                   |
|-----------------------------------------------------------------------------------------|
|Sta                                        INPUT                                         |
|Intens.= 0.00 C1=0.00  A1= 0.00 Qadd   =  5.0    Slope1= 6.0000 Gutter= 2.00 Area  = 0.00|
|CB ID  = 9B   C2=0.00  A2= 0.00 Qrunoff=  5.0    Slope2= 0.0590 a     = 2.00 Perim = 0.00|
|Curb Opening  C3=0.00  A3= 0.00 Grade  =  0.0036 Slope3= 0.0200 W     = 2.00 Length=17.00|
|.........................................................................................|
|                                           OUTPUT                                        |
|Flowby=  0.0 Qtotal=  5.0 Qint=  5.0 Flowby dn=  0.0 Depth=0.37 Spread= 14.75 Veloc= 2.21|
|-----------------------------------------------------------------------------------------|
|                                         CRITERIA                                        |
|Runoff computed by Rational Method   Manning's n Gutter=0.013  Manning's n Pavement=0.016|
|Clogging Factors in Sag Location:                                                        |
|----- Curb Opening= 1.33 Grate= 2.00 Slotted Drain= 2.00 Comb-Curb= 1.33 Comb-Grate= 2.00|
|Clogging Factors on Continuous Grade:                                                    |
|----- Curb Opening= 1.33 Grate= 2.00 Slotted Drain= 2.00 Comb-Curb= 1.33 Comb-Grate= 2.00|
|-----------------------------------------------------------------------------------------|
|Prepared by:         Date:08/04/99    Time:16:30:38     Checked by:        Date:         |
|Pavement Drainage Program (C), 1991 Copyright by SMF Engineering Corporation, Phoenix, AZ|
==========================================================================================
```

```
|PAVEMENT DRAINAGE PROGRAM - HEC-12                                          Page   1 |
|Licensed to: David Evans & Associates, Phoenix, AZ  85016                              |
|Project    : DREAMING SUMMIT:CP9B 100-YEAR, FILE:ST719B2                               |
|---------------------------------------------------------------------------------------|
|Sta                                        INPUT                                       |
|Intens.= 0.00 C1=0.00  A1= 0.00 Qadd   = 11.0    Slope1= 6.0000 Gutter= 2.00 Area  = 0.00|
|CB ID  = 9B   C2=0.00  A2= 0.00 Qrunoff= 11.0    Slope2= 0.0590 a     = 2.00 Perim = 0.00|
|Curb Opening  C3=0.00  A3= 0.00 Grade  =  0.0036 Slope3= 0.0200 W     = 2.00 Length=17.00|
|.......................................................................................|
|                                           OUTPUT                                      |
|Flowby=  0.0 Qtotal= 11.0 Qint=  9.9 Flowby dn=  1.1 Depth=0.48 Spread= 20.20 Veloc= 2.63|
|---------------------------------------------------------------------------------------|
|                                         CRITERIA                                      |
|Runoff computed by Rational Method   Manning's n Gutter=0.013  Manning's n Pavement=0.016|
|Clogging Factors in Sag Location:                                                      |
|----- Curb Opening= 1.33 Grate= 2.00 Slotted Drain= 2.00 Comb-Curb= 1.33 Comb-Grate= 2.00|
|Clogging Factors on Continuous Grade:                                                  |
|----- Curb Opening= 1.33 Grate= 2.00 Slotted Drain= 2.00 Comb-Curb= 1.33 Comb-Grate= 2.00|
|---------------------------------------------------------------------------------------|
|Prepared by:          Date:08/04/99    Time:16:32:11     Checked by:        Date:      |
|Pavement Drainage Program (C), 1991 Copyright by SMF Engineering Corporation, Phoenix, AZ|
=========================================================================================
```

```
|PAVEMENT DRAINAGE PROGRAM - HEC-12                                        Page   1 |
|Licensed to: David Evans & Associates, Phoenix, AZ  85016                            |
|Project    : DREAMING SUMMIT:CP20C 10-YR, FILE:ST7120C                               |
|-------------------------------------------------------------------------------------|
|Sta                                        INPUT                                     |
|Intens.= 0.00 C1=0.00  A1= 0.00 Qadd   = 14.5    Slope1= 6.0000 Gutter= 2.00 Area  = 0.00|
|CB ID  = 20C  C2=0.00  A2= 0.00 Qrunoff= 14.5    Slope2= 0.0590 a     = 2.00 Perim = 0.00|
|Curb Opening  C3=0.00  A3= 0.00 Grade  =  0.0129 Slope3= 0.0200 W     = 2.00 Length=17.00|
|.....................................................................................|
|                                           OUTPUT                                    |
|Flowby=  0.0 Qtotal= 14.5 Qint=  9.8 Flowby dn=  4.7 Depth=0.43 Spread= 17.55 Veloc= 4.57|
|-------------------------------------------------------------------------------------|
|                                         CRITERIA                                    |
|Runoff computed by Rational Method   Manning's n Gutter=0.013  Manning's n Pavement=0.016|
|Clogging Factors in Sag Location:                                                    |
|----- Curb Opening= 1.33 Grate= 2.00 Slotted Drain= 2.00 Comb-Curb= 1.33 Comb-Grate= 2.00|
|Clogging Factors on Continuous Grade:                                                |
|----- Curb Opening= 1.33 Grate= 2.00 Slotted Drain= 2.00 Comb-Curb= 1.33 Comb-Grate= 2.00|
|-------------------------------------------------------------------------------------|
|Prepared by:         Date:08/27/99    Time:09:55:36     Checked by:        Date:     |
|Pavement Drainage Program (C), 1991 Copyright by SMF Engineering Corporation, Phoenix, AZ|
 =====================================================================================
```

```
==========================================================================================
|PAVEMENT DRAINAGE PROGRAM - HEC-12                                              Page   1 |
|Licensed to: David Evans & Associates, Phoenix, AZ  85016                                |
|Project    : DREAMING SUMMIT:CP20C 100-YR, FILE:ST7120C2                                 |
|----------------------------------------------------------------------------------------|
|Sta                                        INPUT                                         |
|Intens.= 0.00 C1=0.00  A1= 0.00 Qadd   = 30.5    Slope1= 6.0000 Gutter= 2.00 Area  = 0.00|
|CB ID  = 20C  C2=0.00  A2= 0.00 Qrunoff= 30.5    Slope2= 0.0590 a     = 2.00 Perim = 0.00|
|Curb Opening  C3=0.00  A3= 0.00 Grade  =  0.0129 Slope3= 0.0200 W     = 2.00 Length=17.00|
|........................................................................................|
|                                           OUTPUT                                        |
|Flowby=  0.0 Qtotal= 30.5 Qint= 14.5 Flowby dn= 16.0 Depth=0.55 Spread= 23.45 Veloc= 5.44|
|----------------------------------------------------------------------------------------|
|                                          CRITERIA                                       |
|Runoff computed by Rational Method   Manning's n Gutter=0.013  Manning's n Pavement=0.016|
|Clogging Factors in Sag Location:                                                        |
|----- Curb Opening= 1.33 Grate= 2.00 Slotted Drain= 2.00 Comb-Curb= 1.33 Comb-Grate= 2.00|
|Clogging Factors on Continuous Grade:                                                    |
|----- Curb Opening= 1.33 Grate= 2.00 Slotted Drain= 2.00 Comb-Curb= 1.33 Comb-Grate= 2.00|
|----------------------------------------------------------------------------------------|
|Prepared by:          Date:08/27/99    Time:09:54:34     Checked by:        Date:        |
|Pavement Drainage Program (C), 1991 Copyright by SMF Engineering Corporation, Phoenix, AZ|
==========================================================================================
```

```
==========================================================================================
|PAVEMENT DRAINAGE PROGRAM - HEC-12                                          Page   1 |
|Licensed to: David Evans & Associates, Phoenix, AZ  85016                              |
|Project    : DREAMING SUMMIT:CP20F 10-YR, FILE:ST7120F                                 |
|----------------------------------------------------------------------------------------|
|Sta                                        INPUT                                       |
|Intens.= 0.00 C1=0.00  A1= 0.00 Qadd   = 11.0    Slope1= 6.0000 Gutter= 2.00 Area  = 0.00|
|CB ID  = 20F  C2=0.00  A2= 0.00 Qrunoff= 11.0    Slope2= 0.0590 a     = 2.00 Perim = 0.00|
|Curb Opening  C3=0.00  A3= 0.00 Grade  =  0.0030 Slope3= 0.0200 W     = 2.00 Length= 6.00|
|........................................................................................|
|                                           OUTPUT                                      |
|Flowby=  0.0 Qtotal= 11.0 Qint=  4.7 Flowby dn=  6.3 Depth=0.50 Spread= 20.95 Veloc= 2.45|
|----------------------------------------------------------------------------------------|
|                                          CRITERIA                                     |
|Runoff computed by Rational Method   Manning's n Gutter=0.013  Manning's n Pavement=0.016|
|Clogging Factors in Sag Location:                                                      |
|----- Curb Opening= 1.33 Grate= 2.00 Slotted Drain= 2.00 Comb-Curb= 1.33 Comb-Grate= 2.00|
|Clogging Factors on Continuous Grade:                                                  |
|----- Curb Opening= 1.33 Grate= 2.00 Slotted Drain= 2.00 Comb-Curb= 1.33 Comb-Grate= 2.00|
|----------------------------------------------------------------------------------------|
|Prepared by:         Date:08/12/99    Time:13:06:16     Checked by:        Date:        |
|Pavement Drainage Program (C), 1991 Copyright by SMF Engineering Corporation, Phoenix, AZ|
==========================================================================================
```

```
==========================================================================================
|PAVEMENT DRAINAGE PROGRAM - HEC-12                                                Page   1 |
|Licensed to: David Evans & Associates, Phoenix, AZ  85016                                |
|Project    : DREAMING SUMMIT:CP20F 100-YR, FILE:ST7120F2                                 |
|----------------------------------------------------------------------------------------|
|Sta                                        INPUT                                         |
|Intens.= 0.00 C1=0.00  A1= 0.00 Qadd   = 23.0    Slope1= 6.0000 Gutter= 2.00 Area  = 0.00|
|CB ID  = 20F  C2=0.00  A2= 0.00 Qrunoff= 23.0    Slope2= 0.0590 a     = 2.00 Perim = 0.00|
|Curb Opening  C3=0.00  A3= 0.00 Grade  =  0.0030 Slope3= 0.0200 W     = 2.00 Length= 6.00|
|........................................................................................|
|                                          OUTPUT                                        |
|Flowby=  0.0 Qtotal= 23.0 Qint=  6.7 Flowby dn= 16.3 Depth=0.64 Spread= 27.90 Veloc= 2.91|
|----------------------------------------------------------------------------------------|
|                                        CRITERIA                                        |
|Runoff computed by Rational Method   Manning's n Gutter=0.013  Manning's n Pavement=0.016|
|Clogging Factors in Sag Location:                                                        |
|----- Curb Opening= 1.33 Grate= 2.00 Slotted Drain= 2.00 Comb-Curb= 1.33 Comb-Grate= 1.00|
|Clogging Factors on Continuous Grade:                                                    |
|----- Curb Opening= 1.33 Grate= 2.00 Slotted Drain= 2.00 Comb-Curb= 1.33 Comb-Grate= 2.00|
|----------------------------------------------------------------------------------------|
|Prepared by:          Date:08/27/99    Time:10:06:11     Checked by:        Date:        |
|Pavement Drainage Program (C), 1991 Copyright by SMF Engineering Corporation, Phoenix, AZ|
==========================================================================================
```

```
|PAVEMENT DRAINAGE PROGRAM - HEC-12                                          Page   1 |
|Licensed to: David Evans & Associates, Phoenix, AZ  85016                              |
|Project    : DREAMING SUMMIT:CP20G 10-YR, FILE:ST7120G                                 |
|-----------------------------------------------------------------------------------------|
|Sta                                        INPUT                                       |
|Intens.= 0.00 C1=0.00  A1= 0.00 Qadd   = 10.3    Slope1= 6.0000 Gutter= 2.00 Area  = 0.00|
|CB ID  = 20G  C2=0.00  A2= 0.00 Qrunoff= 10.3    Slope2= 0.0590 a     = 2.00 Perim = 0.00|
|Curb Opening  C3=0.00  A3= 0.00 Grade  =  0.0030 Slope3= 0.0200 W     = 2.00 Length=34.00|
|.........................................................................................|
|                                           OUTPUT                                      |
|Flowby=  0.0 Qtotal= 10.3 Qint= 10.3 Flowby dn=  0.0 Depth=0.49 Spread= 20.45 Veloc= 2.41|
|-----------------------------------------------------------------------------------------|
|                                         CRITERIA                                      |
|Runoff computed by Rational Method   Manning's n Gutter=0.013  Manning's n Pavement=0.016|
|Clogging Factors in Sag Location:                                                      |
|----- Curb Opening= 1.33 Grate= 2.00 Slotted Drain= 2.00 Comb-Curb= 1.33 Comb-Grate= 2.00|
|Clogging Factors on Continuous Grade:                                                  |
|----- Curb Opening= 1.33 Grate= 2.00 Slotted Drain= 2.00 Comb-Curb= 1.33 Comb-Grate= 2.00|
|-----------------------------------------------------------------------------------------|
|Prepared by:         Date:08/12/99    Time:13:42:28     Checked by:        Date:        |
|Pavement Drainage Program (C), 1991 Copyright by SMF Engineering Corporation, Phoenix, AZ|
=========================================================================================
```

```
==========================================================================================
|PAVEMENT DRAINAGE PROGRAM - HEC-12                                                Page   1 |
|Licensed to: David Evans & Associates, Phoenix, AZ  85016                                |
|Project    : DREAMING SUMMIT:CP20G 100-YR, FILE:ST7120G2                                 |
|----------------------------------------------------------------------------------------|
|Sta                                        INPUT                                         |
|Intens.= 0.00 C1=0.00  A1= 0.00 Qadd   = 25.8    Slope1= 6.0000 Gutter= 2.00 Area  = 0.00|
|CB ID  = 20G  C2=0.00  A2= 0.00 Qrunoff= 25.8    Slope2= 0.0590 a     = 2.00 Perim = 0.00|
|Curb Opening  C3=0.00  A3= 0.00 Grade  =  0.0030 Slope3= 0.0200 W     = 2.00 Length=34.00|
|........................................................................................|
|                                           OUTPUT                                        |
|Flowby=  0.0 Qtotal= 25.8 Qint= 25.5 Flowby dn=  0.3 Depth=0.66 Spread= 29.15 Veloc= 3.00|
|----------------------------------------------------------------------------------------|
|                                         CRITERIA                                        |
|Runoff computed by Rational Method   Manning's n Gutter=0.013  Manning's n Pavement=0.016|
|Clogging Factors in Sag Location:                                                        |
|----- Curb Opening= 1.33 Grate= 2.00 Slotted Drain= 2.00 Comb-Curb= 1.33 Comb-Grate= 2.00|
|Clogging Factors on Continuous Grade:                                                    |
|----- Curb Opening= 1.33 Grate= 2.00 Slotted Drain= 2.00 Comb-Curb= 1.33 Comb-Grate= 2.00|
|----------------------------------------------------------------------------------------|
|Prepared by:          Date:08/27/99    Time:10:19:03     Checked by:        Date:        |
|Pavement Drainage Program (C), 1991 Copyright by SMF Engineering Corporation, Phoenix, AZ|
==========================================================================================
```

```
==========================================================================================
|PAVEMENT DRAINAGE PROGRAM - HEC-12                                              Page   1 |
|Licensed to: David Evans & Associates, Phoenix, AZ  85016                                |
|Project    : DREAMING SUMMIT:CP20H 10-YR, FILE:ST7120H                                   |
|----------------------------------------------------------------------------------------|
|Sta                                        INPUT                                         |
|Intens.= 0.00 C1=0.00  A1= 0.00 Qadd   =  4.2    Slope1= 6.0000 Gutter= 2.00 Area  = 0.00|
|CB ID  = 20H  C2=0.00  A2= 0.00 Qrunoff=  4.2    Slope2= 0.0290 a     = 2.00 Perim = 0.00|
|Curb Opening  C3=0.00  A3= 0.00 Grade  =  0.0036 Slope3= 0.0200 W     = 2.00 Length=34.00|
|........................................................................................|
|                                           OUTPUT                                        |
|Flowby=  0.0 Qtotal=  4.2 Qint=  4.2 Flowby dn=  0.0 Depth=0.30 Spread= 13.95 Veloc= 2.13|
|----------------------------------------------------------------------------------------|
|                                         CRITERIA                                        |
|Runoff computed by Rational Method   Manning's n Gutter=0.013  Manning's n Pavement=0.016|
|Clogging Factors in Sag Location:                                                        |
|----- Curb Opening= 1.33 Grate= 2.00 Slotted Drain= 2.00 Comb-Curb= 1.33 Comb-Grate= 2.00|
|Clogging Factors on Continuous Grade:                                                    |
|----- Curb Opening= 1.33 Grate= 2.00 Slotted Drain= 2.00 Comb-Curb= 1.33 Comb-Grate= 2.00|
|----------------------------------------------------------------------------------------|
|Prepared by:          Date:08/27/99    Time:10:01:56     Checked by:        Date:        |
|Pavement Drainage Program (C), 1991 Copyright by SMF Engineering Corporation, Phoenix, AZ|
==========================================================================================
```

```
==========================================================================================
|PAVEMENT DRAINAGE PROGRAM - HEC-12                                                Page   1 |
|Licensed to: David Evans & Associates, Phoenix, AZ  85016                                |
|Project    : DREAMING SUMMIT:CP20H 100-YR, FILE:ST7120H2                                 |
|-----------------------------------------------------------------------------------------|
|Sta                                        INPUT                                         |
|Intens.= 0.00 C1=0.00  A1= 0.00 Qadd   = 14.7    Slope1= 6.0000 Gutter= 2.00 Area  = 0.00|
|CB ID  = 20H  C2=0.00  A2= 0.00 Qrunoff= 14.7    Slope2= 0.0590 a     = 2.00 Perim = 0.00|
|Curb Opening  C3=0.00  A3= 0.00 Grade  =  0.0036 Slope3= 0.0200 W     = 2.00 Length=34.00|
|.........................................................................................|
|                                           OUTPUT                                        |
|Flowby=  0.0 Qtotal= 14.7 Qint= 14.7 Flowby dn=  0.0 Depth=0.53 Spread= 22.65 Veloc= 2.81|
|-----------------------------------------------------------------------------------------|
|                                         CRITERIA                                        |
|Runoff computed by Rational Method   Manning's n Gutter=0.013  Manning's n Pavement=0.016|
|Clogging Factors in Sag Location:                                                        |
|----- Curb Opening= 1.33 Grate= 2.00 Slotted Drain= 2.00 Comb-Curb= 1.33 Comb-Grate= 2.00|
|Clogging Factors on Continuous Grade:                                                    |
|----- Curb Opening= 1.33 Grate= 2.00 Slotted Drain= 2.00 Comb-Curb= 1.33 Comb-Grate= 2.00|
|-----------------------------------------------------------------------------------------|
|Prepared by:         Date:08/27/99    Time:10:25:32     Checked by:        Date:         |
|Pavement Drainage Program (C), 1991 Copyright by SMF Engineering Corporation, Phoenix, AZ|
==========================================================================================
```

```
==========================================================================================
|PAVEMENT DRAINAGE PROGRAM - HEC-12                                              Page   1 |
|Licensed to: David Evans & Associates, Phoenix, AZ  85016                                |
|Project     : STAR0071 DREAMING SUMMIT UNIT 2B 2B10YR                                    |
|-----------------------------------------------------------------------------------------|
|Sta                                          INPUT                                       |
|Intens.= 0.00 C1=0.00  A1= 0.00 Qadd   =  8.5    Slope1= 6.0000 Gutter= 1.50 Area  = 0.00|
|CB ID  = 24A  C2=0.00  A2= 0.00 Qrunoff=  8.5    Slope2= 0.0590 a     = 2.00 Perim = 0.00|
|Curb Opening  C3=0.00  A3= 0.00 Grade  =  0.0036 Slope3= 0.0200 W     = 1.50 Length=10.00|
|.........................................................................................|
|                                             OUTPUT                                      |
|Flowby=  0.0 Qtotal=  8.5 Qint=  5.9 Flowby dn=  2.6 Depth=0.43 Spread= 18.53 Veloc= 2.43|
|-----------------------------------------------------------------------------------------|
|Sta                                          INPUT                                       |
|Intens.= 0.00 C1=0.00  A1= 0.00 Qadd   =  9.5    Slope1= 6.0000 Gutter= 1.50 Area  = 0.00|
|CB ID  = 24B  C2=0.00  A2= 0.00 Qrunoff=  9.5    Slope2= 0.0590 a     = 2.00 Perim = 0.00|
|Curb Opening  C3=0.00  A3= 0.00 Grade  =  0.0036 Slope3= 0.0200 W     = 1.50 Length=17.00|
|.........................................................................................|
|                                             OUTPUT                                      |
|Flowby=  2.6 Qtotal= 12.1 Qint= 10.4 Flowby dn=  1.7 Depth=0.48 Spread= 21.23 Veloc= 2.65|
|-----------------------------------------------------------------------------------------|
|Sta                                          INPUT                                       |
|Intens.= 0.00 C1=0.00  A1= 0.00 Qadd   = 16.0    Slope1= 6.0000 Gutter= 1.50 Area  = 4.34|
|CB ID  = 24CW C2=0.00  A2= 0.00 Qrunoff= 16.0    Slope2= 0.0590 a     = 2.00 Lgrate= 3.33|
|Com P-1-7/8   C3=0.00  A3= 0.00 Grade  =  0.0000 Slope3= 0.0200 W     = 1.50 Length=17.00|
|.........................................................................................|
|                                             OUTPUT                                      |
|Flowby=  1.7 Qtotal= 17.7 Qint= 17.7 Flowby dn=  0.0 Depth=0.50 Spread= 13.79 Veloc= 0.00|
|-----------------------------------------------------------------------------------------|
|Sta                                          INPUT                                       |
|Intens.= 0.00 C1=0.00  A1= 0.00 Qadd   = 17.7    Slope1= 6.0000 Gutter= 1.50 Area  = 4.34|
|CB ID  = 24CE C2=0.00  A2= 0.00 Qrunoff= 17.7    Slope2= 0.0590 a     = 2.00 Lgrate= 3.33|
|Com P-1-7/8   C3=0.00  A3= 0.00 Grade  =  0.0000 Slope3= 0.0200 W     = 1.50 Length=34.00|
|.........................................................................................|
|                                             OUTPUT                                      |
|Flowby=  0.0 Qtotal= 17.7 Qint= 17.7 Flowby dn=  0.0 Depth=0.35 Spread=  6.09 Veloc= 0.00|
|-----------------------------------------------------------------------------------------|
|Sta                                          INPUT                                       |
|Intens.= 0.00 C1=0.00  A1= 0.00 Qadd   =  7.0    Slope1= 6.0000 Gutter= 1.50 Area  = 0.00|
|CB ID  = 25   C2=0.00  A2= 0.00 Qrunoff=  7.0    Slope2= 0.0590 a     = 2.00 Perim = 0.00|
|Curb Opening  C3=0.00  A3= 0.00 Grade  =  0.0000 Slope3= 0.0200 W     = 1.50 Length=12.00|
|.........................................................................................|
|                                             OUTPUT                                      |
|Flowby=  0.0 Qtotal=  7.0 Qint=  7.0 Flowby dn=  0.0 Depth=0.42 Spread=  9.90 Veloc= 0.00|
|-----------------------------------------------------------------------------------------|
|Sta                                          INPUT                                       |
|Intens.= 0.00 C1=0.00  A1= 0.00 Qadd   =  3.0    Slope1= 6.0000 Gutter= 1.50 Area  = 0.00|
|CB ID  = 26   C2=0.00  A2= 0.00 Qrunoff=  3.0    Slope2= 0.0590 a     = 2.00 Perim = 0.00|
|Curb Opening  C3=0.00  A3= 0.00 Grade  =  0.0000 Slope3= 0.0200 W     = 1.50 Length= 4.00|
|.........................................................................................|
|                                             OUTPUT                                      |
|Flowby=  0.0 Qtotal=  3.0 Qint=  3.0 Flowby dn=  0.0 Depth=0.41 Spread=  9.05 Veloc= 0.00|
==========================================================================================
```

Licensed to: David Evans & Associates, Phoenix, AZ 85016
Project : STAR0071 DREAMING SUMMIT UNIT 2B 2B10YR

CRITERIA

Runoff computed by Rational Method Manning's n Gutter=0.013 Manning's n Pavement=0.016
Clogging Factors in Sag Location:
----- Curb Opening= 1.33 Grate= 2.00 Slotted Drain= 2.00 Comb-Curb= 1.33 Comb-Grate= 2.00
Clogging Factors on Continuous Grade:
----- Curb Opening= 1.33 Grate= 2.00 Slotted Drain= 2.00 Comb-Curb= 1.33 Comb-Grate= 2.00

Prepared by: Date:08/27/99 Time:10:34:33 Checked by: Date:
Pavement Drainage Program (C), 1991 Copyright by SMF Engineering Corporation, Phoenix, AZ

```
|PAVEMENT DRAINAGE PROGRAM - HEC-12                                          Page   1 |
|Licensed to: David Evans & Associates, Phoenix, AZ  85016                             |
|Project    : STAR0071 DREAMING SUMMIT UNIT 2B 2B100YR                                 |
|--------------------------------------------------------------------------------------|
|Sta                                        INPUT                                      |
|Intens.= 0.00 C1=0.00  A1= 0.00 Qadd   = 18.0    Slope1= 6.0000 Gutter= 1.50 Area  = 0.00|
|CB ID  = 24A  C2=0.00  A2= 0.00 Qrunoff= 18.0    Slope2= 0.0590 a     = 2.00 Perim = 0.00|
|Curb Opening  C3=0.00  A3= 0.00 Grade  =  0.0036 Slope3= 0.0200 W     = 1.50 Length=10.00|
|......................................................................................|
|                                           OUTPUT                                     |
|Flowby=  0.0 Qtotal= 18.0 Qint=  8.8 Flowby dn=  9.2 Depth=0.55 Spread= 24.73 Veloc= 2.91|
|--------------------------------------------------------------------------------------|
|Sta                                        INPUT                                      |
|Intens.= 0.00 C1=0.00  A1= 0.00 Qadd   = 20.0    Slope1= 6.0000 Gutter= 1.50 Area  = 0.00|
|CB ID  = 24B  C2=0.00  A2= 0.00 Qrunoff= 20.0    Slope2= 0.0590 a     = 2.00 Perim = 0.00|
|Curb Opening  C3=0.00  A3= 0.00 Grade  =  0.0036 Slope3= 0.0200 W     = 1.50 Length=17.00|
|......................................................................................|
|                                           OUTPUT                                     |
|Flowby=  9.2 Qtotal= 29.2 Qint= 17.6 Flowby dn= 11.6 Depth=0.65 Spread= 29.73 Veloc= 3.28|
|--------------------------------------------------------------------------------------|
|Sta                                        INPUT                                      |
|Intens.= 0.00 C1=0.00  A1= 0.00 Qadd   = 15.7    Slope1= 6.0000 Gutter= 1.50 Area  = 4.34|
|CB ID  = 24CWC2=0.00  A2= 0.00 Qrunoff= 15.7    Slope2= 0.0590 a     = 2.00 Lgrate= 3.33|
|Com P-1-7/8   C3=0.00  A3= 0.00 Grade  =  0.0000 Slope3= 0.0200 W     = 1.50 Length=17.00|
|......................................................................................|
|                                           OUTPUT                                     |
|Flowby= 11.6 Qtotal= 27.3 Qint= 27.3 Flowby dn=  0.0 Depth=0.67 Spread= 22.39 Veloc= 0.00|
|--------------------------------------------------------------------------------------|
|Sta                                        INPUT                                      |
|Intens.= 0.00 C1=0.00  A1= 0.00 Qadd   = 49.7    Slope1= 6.0000 Gutter= 1.50 Area  = 4.34|
|CB ID  = 24CE C2=0.00  A2= 0.00 Qrunoff= 49.7    Slope2= 0.0590 a     = 2.00 Lgrate= 3.33|
|Com P-1-7/8   C3=0.00  A3= 0.00 Grade  =  0.0000 Slope3= 0.0200 W     = 1.50 Length=34.00|
|......................................................................................|
|                                           OUTPUT                                     |
|Flowby=  0.0 Qtotal= 49.7 Qint= 49.7 Flowby dn=  0.0 Depth=0.67 Spread= 22.44 Veloc= 0.00|
|--------------------------------------------------------------------------------------|
|Sta                                        INPUT                                      |
|Intens.= 0.00 C1=0.00  A1= 0.00 Qadd   = 14.0    Slope1= 6.0000 Gutter= 1.50 Area  = 0.00|
|CB ID  = 25   C2=0.00  A2= 0.00 Qrunoff= 14.0    Slope2= 0.0590 a     = 2.00 Perim = 0.00|
|Curb Opening  C3=0.00  A3= 0.00 Grade  =  0.0000 Slope3= 0.0200 W     = 1.50 Length=12.00|
|......................................................................................|
|                                           OUTPUT                                     |
|Flowby=  0.0 Qtotal= 14.0 Qint= 14.0 Flowby dn=  0.0 Depth=0.58 Spread= 17.94 Veloc= 0.00|
|--------------------------------------------------------------------------------------|
|Sta                                        INPUT                                      |
|Intens.= 0.00 C1=0.00  A1= 0.00 Qadd   =  5.0    Slope1= 6.0000 Gutter= 1.50 Area  = 0.00|
|CB ID  = 26   C2=0.00  A2= 0.00 Qrunoff=  5.0    Slope2= 0.0590 a     = 2.00 Perim = 0.00|
|Curb Opening  C3=0.00  A3= 0.00 Grade  =  0.0000 Slope3= 0.0200 W     = 1.50 Length= 4.00|
|......................................................................................|
|                                           OUTPUT                                     |
|Flowby=  0.0 Qtotal=  5.0 Qint=  5.0 Flowby dn=  0.0 Depth=0.63 Spread= 20.39 Veloc= 0.00|
 ======================================================================================
```

Licensed to: David Evans & Associates, Phoenix, AZ 85016
Project : STAR0071 DREAMING SUMMIT UNIT 2B 2B100YR

CRITERIA

Runoff computed by Rational Method Manning's n Gutter=0.013 Manning's n Pavement=0.016
Clogging Factors in Sag Location:
----- Curb Opening= 1.33 Grate= 2.00 Slotted Drain= 2.00 Comb-Curb= 1.33 Comb-Grate= 2.00
Clogging Factors on Continuous Grade:
----- Curb Opening= 1.33 Grate= 2.00 Slotted Drain= 2.00 Comb-Curb= 1.33 Comb-Grate= 2.00

Prepared by: Date:08/27/99 Time:10:36:54 Checked by: Date:
Pavement Drainage Program (C), 1991 Copyright by SMF Engineering Corporation, Phoenix, AZ

WEIR CALCULATIONS

Q = C * L * H^(1.5)
BREADTH OF WEIR CREST = 5'

CONCENTRATION POINT **24C**

Total Q @ CP24	93.2 cfs	[Q(rational for 24C) + Q(rational for 24D)
Q intercepted @ 24CW	27.3 cfs	-Q(intercepted @ 24A)
Q intercepted @ 24CE	49.7 cfs	- Q(intercepted @ 24B)] = 93.2 cfs

93.2 - 27.3 - 49.7 = **16.2 cfs**

Q_{100} =	16.2 cfs
L =	76 ft.
C =	2.34
H =	**0.20** ft

Top of curb = 66.13
$WSEL_{100}$ = 66.13 + 0.20 = **66.33**
Nearest Finished Floor Elevation = **67.57**
The FF elevation is at least 1 foot above the 100-year WSEL.

Culvert Designer/Analyzer Report
UNIT 2B OFF-SITE CHANNEL CULVERT

Analysis Component			
Storm Event	Design	Discharge	165.00 cfs

Peak Discharge Method: User-Specified			
Design Discharge	165.00 cfs	Check Discharge	200.00 cfs

Tailwater properties: Trapezoidal Channel			
Slope	0.010000 ft/ft	Mannings Coefficient	0.025
Depth	1.58 ft	Left Side Slope	4 H : V
Right Side Slope	4 H : V	Bottom Width	10.00 ft

Tailwater conditions for Design Storm.			
Discharge	165.00 cfs	Bottom Elevation	61.00 ft
Depth	1.58 ft	Velocity	6.41 ft/s

Name	Description	Discharge	HW Elev	Velocity
Culvert-1	3-36 inch Circular	165.00 cfs	65.69 ft	9.05 ft/s
Weir	Not Considered	N/A	N/A	N/A

Culvert Designer/Analyzer Report
UNIT 2B OFF-SITE CHANNEL CULVERT

Component:Culvert-1

Culvert Summary				
Computed Headwater Elevation	65.69 ft		Discharge	165.00 cfs
Inlet Control HW Elev	65.62 ft		Tailwater Elevation	62.58 ft
Outlet Control HW Elev	65.69 ft		Control Type	Outlet Control
Headwater Depth/ Height	1.50			

Grades				
Upstream Invert	61.20 ft		Downstream Invert	61.00 ft
Length	120.00 ft		Constructed Slope	0.001667 ft/ft

Hydraulic Profile				
Profile	CompositeM2Pressure		Depth, Downstream	2.41 ft
Slope Type	Mild		Normal Depth	N/A ft
Flow Regime	Subcritical		Critical Depth	2.41 ft
Velocity Downstream	9.05 ft/s		Critical Slope	0.005067 ft/ft

Section				
Section Shape	Circular		Mannings Coefficient	0.011
Section Material	Concrete		Span	3.00 ft
Section Size	36 inch		Rise	3.00 ft
Number Sections	3			

Outlet Control Properties				
Outlet Control HW Elev	65.69 ft		Upstream Velocity Head	0.94 ft
Ke	0.50		Entrance Loss	0.47 ft

Inlet Control Properties				
Inlet Control HW Elev	65.62 ft		Flow Control	N/A
Inlet Type	Square edge w/headwall		Area Full	21.2 ft^2
K	0.00980		HDS 5 Chart	1
M	2.00000		HDS 5 Scale	1
C	0.03980		Equation Form	1
Y	0.67000			

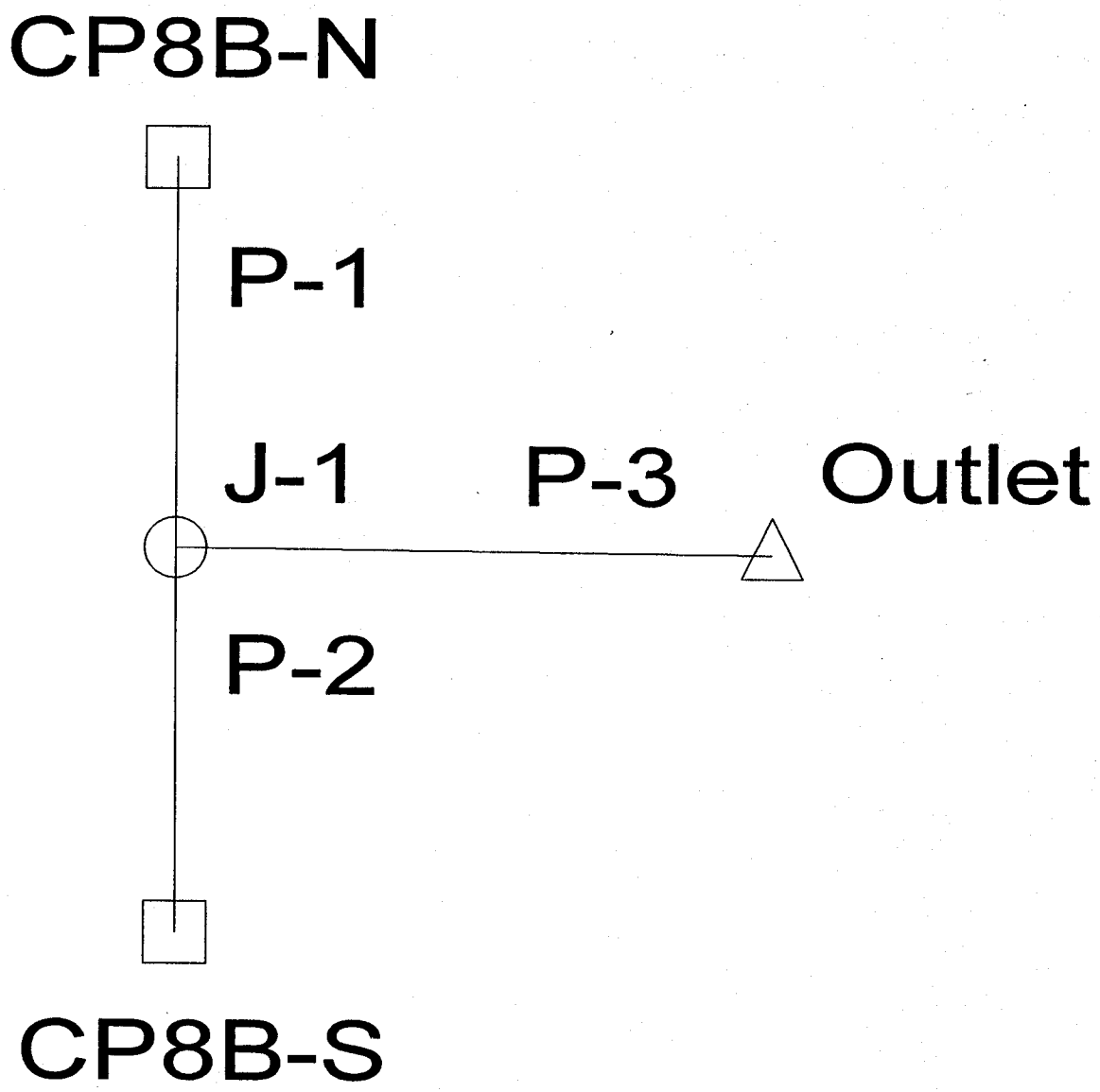
CP8B-N
P-1
J-1
P-3
Outlet
P-2
CP8B-S

Combined Pipe/Node Report

Up Node	Dn Node	Size	Q (cfs)	Up Invert (ft)	Dn Invert (ft)	Length (ft)	Roughness	S (ft/ft)	V avg (ft/s)	Up HGL (ft)	Dn HGL (ft)	Up Gr Elev (ft)	Dn Gr Elev (ft)	Up Cover (ft)	Dn Cover (ft)	Pipe
CP8B-S	J-1	18 inch	2.30	63.50	63.30	12.00	0.012	0.016667	1.83	64.41	64.43	68.76	69.20	3.76	4.40	P-2
CP8B-N	J-1	18 inch	2.30	63.50	63.30	12.00	0.012	0.016667	1.83	64.41	64.43	68.69	69.20	3.69	4.40	P-1
J-1	Outlet	18 inch	4.60	63.30	63.00	70.50	0.012	0.004255	4.53	64.15	63.82	69.20	67.00	4.40	2.50	P-3

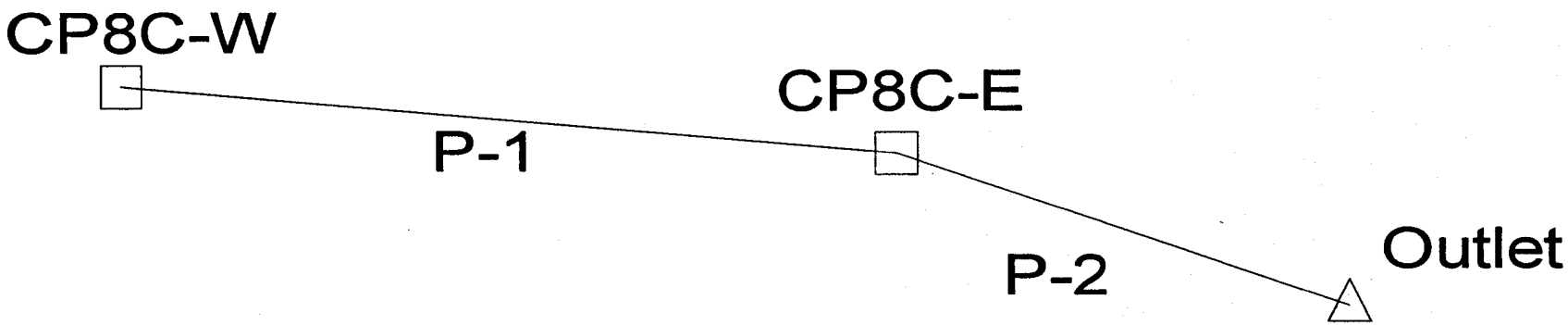
CP8C-W
P-1
CP8C-E
P-2
Outlet

Combined Pipe/Node Report

Up Node	Dn Node	Size	Q (cfs)	Up Invert (ft)	Dn Invert (ft)	Length (ft)	Roughness	S (ft/ft)	V avg (ft/s)	Up HGL (ft)	Dn HGL (ft)	Up Gr Elev (ft)	Dn Gr Elev (ft)	Up Cover (ft)	Dn Cover (ft)	Pipe
CP8C-W	CP8C-E	24 inch	19.00	63.30	63.10	28.00	0.012	0.007143	6.05	66.08	65.91	68.96	68.96	3.66	3.86	P-1
CP8C-E	Outlet	36 inch	38.00	63.10	63.00	23.00	0.012	0.004348	7.52	65.13	65.01	68.96	67.00	2.86	1.00	P-2

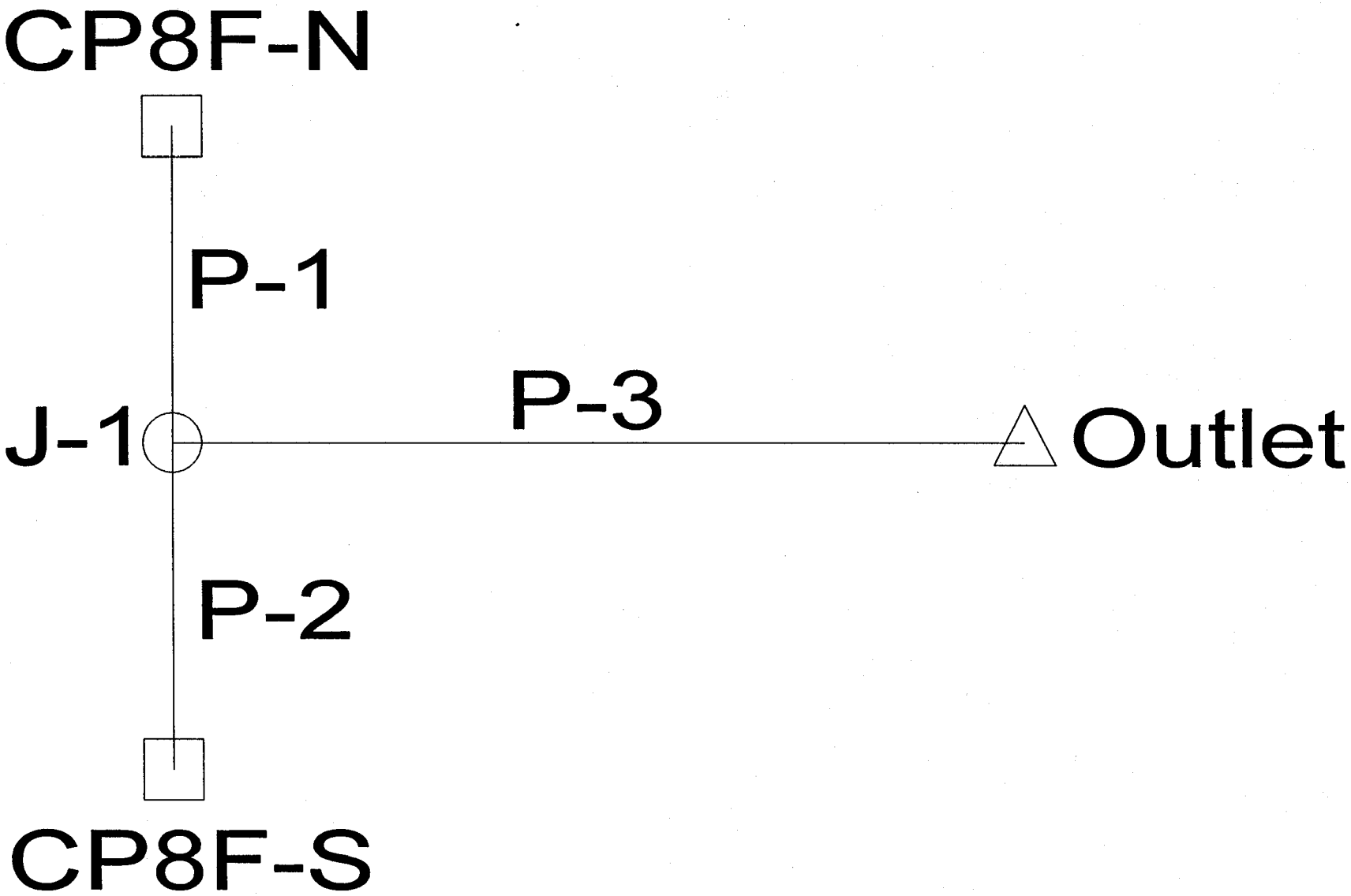
CP8F-N
P-1
J-1
P-3
Outlet
P-2
CP8F-S

Combined Pipe/Node Report

Up Node	Dn Node	Size	Q (cfs)	Up Invert (ft)	Dn Invert (ft)	Length (ft)	Roughness	S (ft/ft)	V avg (ft/s)	Up HGL (ft)	Dn HGL (ft)	Up Gr Elev (ft)	Dn Gr Elev (ft)	Up Cover (ft)	Dn Cover (ft)	Pipe
CP8F-N	J-1	18 inch	9.80	64.00	63.60	14.50	0.012	0.027586	5.55	66.28	66.17	68.72	69.20	3.22	4.10	P-1
CP8F-S	J-1	18 inch	9.80	64.00	63.60	12.50	0.012	0.032000	5.55	66.27	66.17	68.62	69.20	3.12	4.10	P-2
J-1	Outlet	24 inch	19.60	63.60	63.00	138.50	0.012	0.004332	6.78	65.63	64.59	69.20	67.00	3.60	2.00	P-3

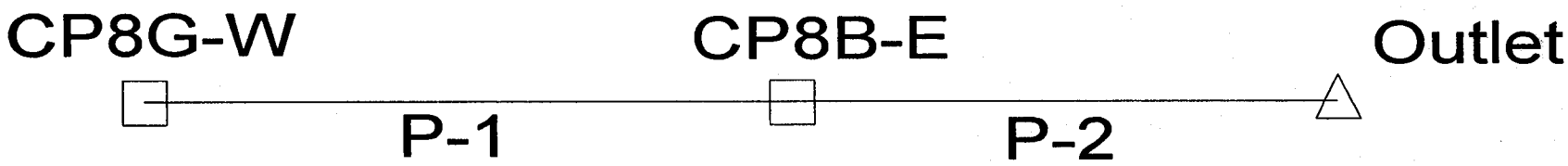
CP8G-W
CP8B-E
Outlet
P-1
P-2

Combined Pipe/Node Report

Up Node	Dn Node	Size	Q (cfs)	Up Invert (ft)	Dn Invert (ft)	Length (ft)	Roughness	S (ft/ft)	V avg (ft/s)	Up HGL (ft)	Dn HGL (ft)	Up Gr Elev (ft)	Dn Gr Elev (ft)	Up Cover (ft)	Dn Cover (ft)	Pipe
CP8G-W	CP8B-E	24 inch	26.90	63.20	63.10	26.50	0.012	0.003774	8.56	66.63	66.32	67.92	67.92	2.72	2.82	P-1
CP8B-E	Outlet	42 inch	53.80	63.05	63.00	26.00	0.012	0.001923	7.61	65.59	65.30	67.92	67.50	1.37	1.00	P-2

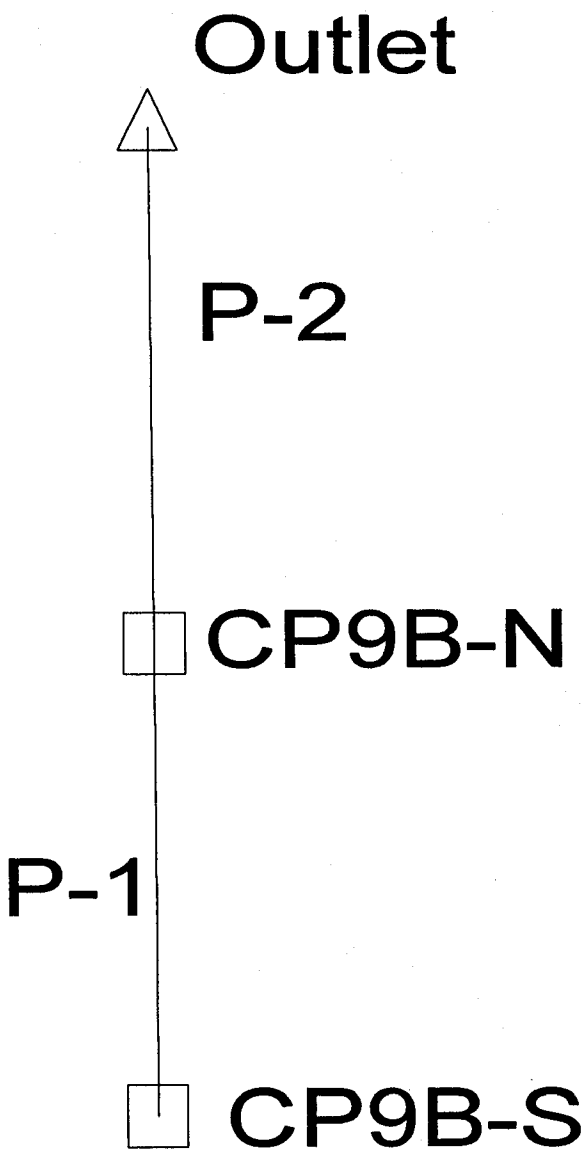
Outlet
P-2
CP9B-N
P-1
CP9B-S

Combined Pipe/Node Report

Up Node	Dn Node	Size	Q (cfs)	Up Invert (ft)	Dn Invert (ft)	Length (ft)	Roughness	S (ft/ft)	V avg (ft/s)	Up HGL (ft)	Dn HGL (ft)	Up Gr Elev (ft)	Dn Gr Elev (ft)	Up Cover (ft)	Dn Cover (ft)	Pipe
CP9B-S	CP9B-N	18 inch	11.00	61.00	60.50	25.50	0.012	0.019608	6.22	63.63	63.39	67.04	67.05	4.54	5.05	P-1
CP9B-N	Outlet	24 inch	22.00	60.50	60.00	109.00	0.012	0.004587	7.42	62.70	61.68	67.05	64.00	4.55	2.00	P-2

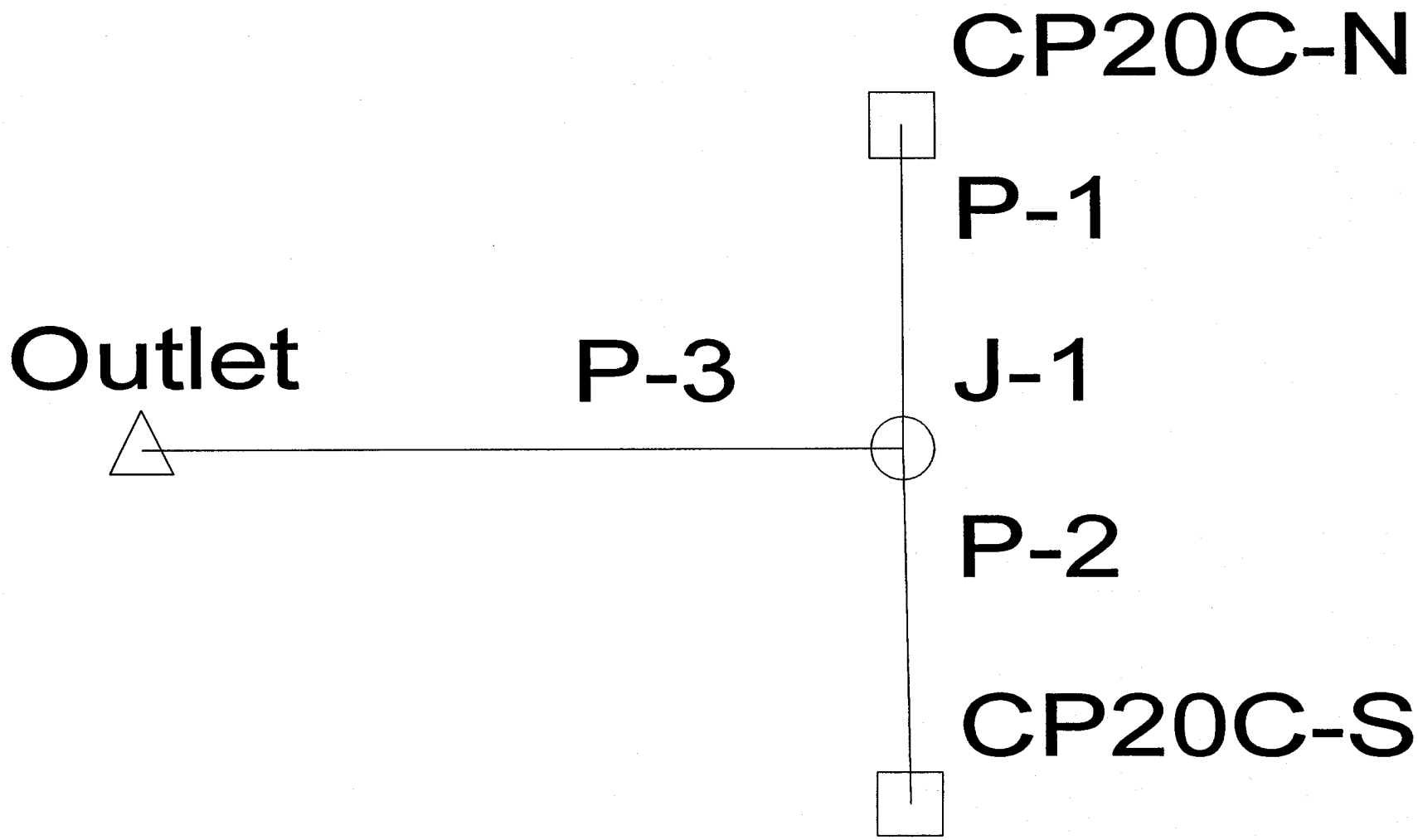
CP20C-N
P-1
Outlet
P-3
J-1
P-2
CP20C-S

Combined Pipe/Node Report

Up Node	Dn Node	Size	Q (cfs)	Up Invert (ft)	Dn Invert (ft)	Length (ft)	Roughness	S (ft/ft)	V avg (ft/s)	Up HGL (ft)	Dn HGL (ft)	Up Gr Elev (ft)	Dn Gr Elev (ft)	Up Cover (ft)	Dn Cover (ft)	Pipe
CP20F-E	J-1	18 inch	6.70	63.20	63.00	16.50	0.012	0.012121	3.79	66.54	66.48	68.80	69.25	4.10	4.75	P-2
CP20F-W	J-1	18 inch	6.70	63.20	63.00	12.00	0.012	0.016667	3.79	66.53	66.48	68.83	69.25	4.13	4.75	P-1
J-1	J-2	24 inch	13.40	63.00	62.75	35.00	0.012	0.007143	4.27	66.23	66.13	69.25	68.80	4.25	4.05	P-3
J-2	J-3	24 inch	13.40	62.75	61.25	123.50	0.012	0.012146	4.27	65.87	65.50	68.80	68.50	4.05	5.25	P-4
CP20G-N	J-3	18 inch	25.50	62.00	61.25	12.00	0.012	0.062500	4.43	66.10	65.50	68.00	68.50	4.50	5.75	P-5
CP20G-S	J-3	18 inch	25.50	62.00	61.25	12.00	0.012	0.062500	4.43	66.10	65.50	68.00	68.50	4.50	5.75	P-6
J-3	Outlet	42 inch	64.40	61.25	61.00	107.50	0.012	0.002326	6.69	64.88	64.50	68.50	65.00	3.75	0.50	P-7

Combined Pipe/Node Report

Up Node	Dn Node	Size	Q (cfs)	Up Invert (ft)	Dn Invert (ft)	Length (ft)	Roughness	S (ft/ft)	V avg (ft/s)	Up HGL (ft)	Dn HGL (ft)	Up Gr Elev (ft)	Dn Gr Elev (ft)	Up Cover (ft)	Dn Cover (ft)	Pipe
CP20C-N	J-1	18 inch	14.50	63.00	62.30	13.00	0.012	.053846	8.21	65.41	65.20	69.82	70.32	5.32	6.52	P-1
CP20C-S	J-1	18 inch	14.50	63.00	62.30	13.00	0.012	.053846	8.21	65.41	65.20	69.82	70.32	5.32	6.52	P-2
J-1	Outlet	30 inch	29.00	62.30	62.00	37.50	0.012	.002182	6.75	64.69	63.84	70.32	66.00	5.52	1.50	P-3

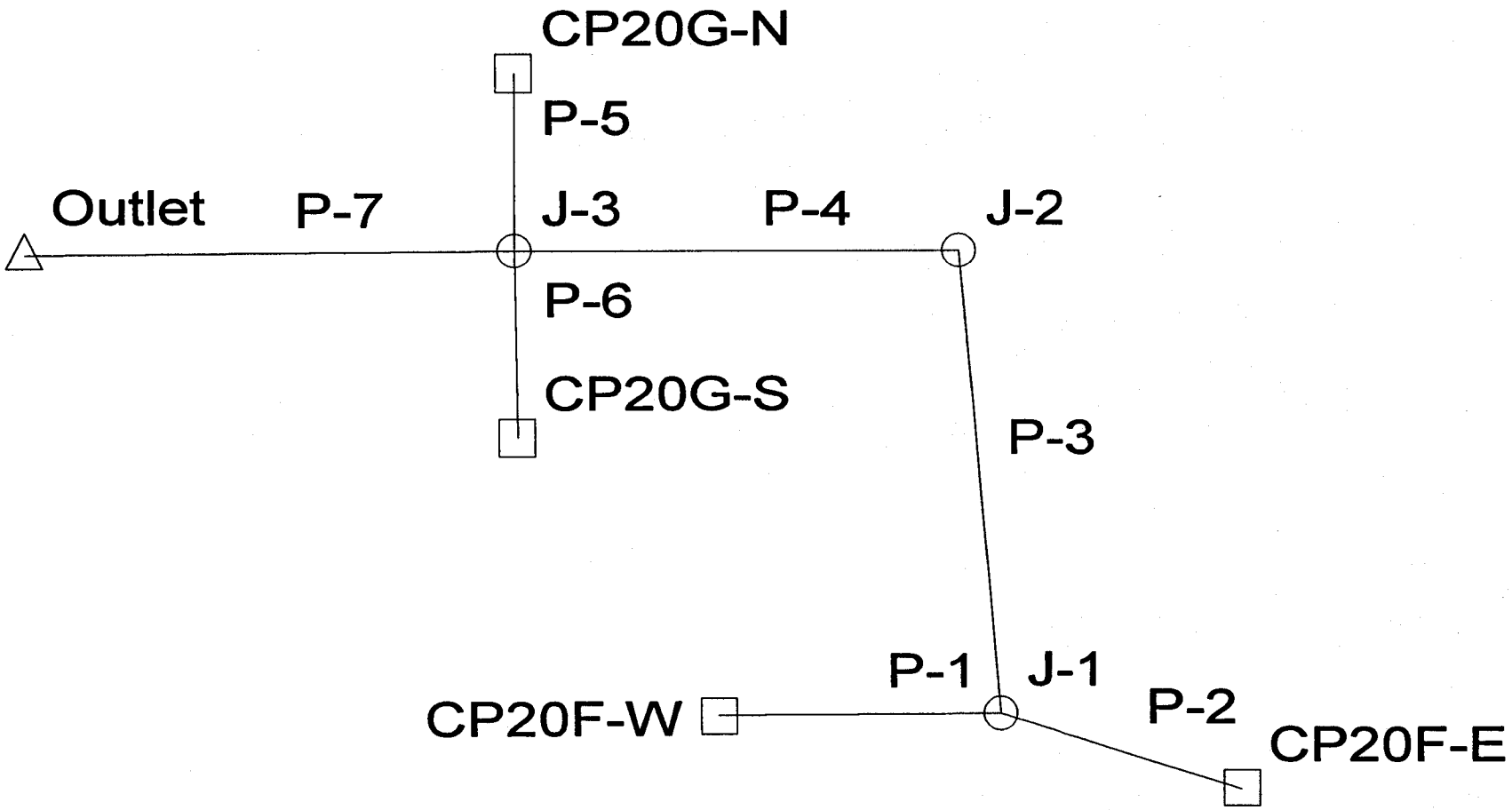
CP20G-N
P-5
Outlet
P-7
J-3
P-4
J-2
P-6
CP20G-S
P-3
P-1
J-1
P-2
CP20F-W
CP20F-E

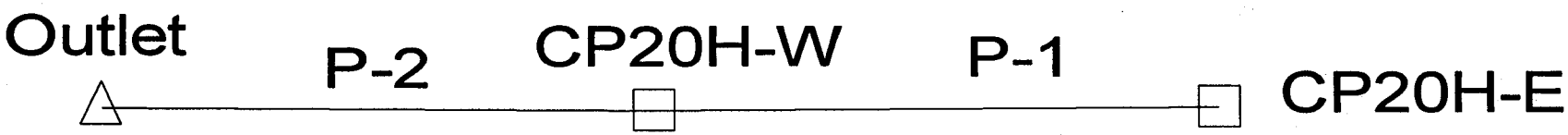
Outlet
P-2
CP20H-W
P-1
CP20H-E

Combined Pipe/Node Report

Up Node	Dn Node	Size	Q (cfs)	Up Invert (ft)	Dn Invert (ft)	Length (ft)	Roughness	S (ft/ft)	V avg (ft/s)	Up HGL (ft)	Dn HGL (ft)	Up Gr Elev (ft)	Dn Gr Elev (ft)	Up Cover (ft)	Dn Cover (ft)	Pipe
CP20H-E	CP20H-W	18 inch	14.70	61.30	61.15	28.00	0.012	0.005357	8.32	64.26	63.80	67.91	67.91	5.11	5.26	P-1
CP20H-W	Outlet	30 inch	29.40	61.15	61.00	21.50	0.012	0.006977	7.84	63.00	62.73	67.91	65.00	4.26	1.50	P-2

RETENTION BASIN CALCULATIONS

V = C (P/12) A P = 2.65"

UNIT 2B

CONTRIBUTING DRAINAGE AREAS **7A, 8A-8E, 9A, 9B, 20A-G**

Type	Area (Ac)	C' Coefficient	Precip (in)	Retention Required (AF)	
Residential	62.78	0.66	2.65	9.15	
Open Space (DG)	0.00	0.35	2.65	0.00	
Open Space	0.00	0.25	2.65	0.00	
Roadway	0.00	0.95	2.65	0.00	
Total	62.78			9.15	Required for site
				10.96	Required for Unit 2A
				5.72	Required for Infrastructure
				88.70	Required for off-site
				97.85	Required for basin

Retention Basin 1

Elevation	Area (ft^2)	Avg. Area (ft^2)	Depth (ft)	Volume (ft^3)	Σ Volume (ft^2)	Σ Volume (ac-ft)
59	285,489					
		407,712	1	407,712	407,712	9.36
60	529,934					
		632,133	1	632,133	1,039,844	23.87
61	734,331					
		755,285	1	755,285	1,795,129	41.21
62	776,238					
		786,105	1	786,105	2,581,233	59.26
63	795,972					
		806,059	1	806,059	3,387,292	77.76
64	816,146					
		835,206	1	835,206	4,222,498	96.94
65	854,266					
		887,776	1	887,776	5,110,274	117.32
66	921,286					
		932,194	1	932,194	6,042,468	138.72
67	943,101					

	6,042,468	ft^3
Provided	138.72	Acre-ft
Required	97.85	Acre-ft
Excess Provided	40.87	Acre-ft

UNIT 3

(*This volume from Unit 2B is being stored in Unit 3*)

CONTRIBUTING DRAINAGE AREAS

Type	Area (Ac)	C' Coefficient	Precip (in)	Retention Required (AF)	
Residential	35.83	0.66	2.65	5.22	
Open Space	3.61	0.25	2.65	0.20	
Roadway	1.41	0.95	2.65	0.30	
Total	40.85			5.72	Required for site

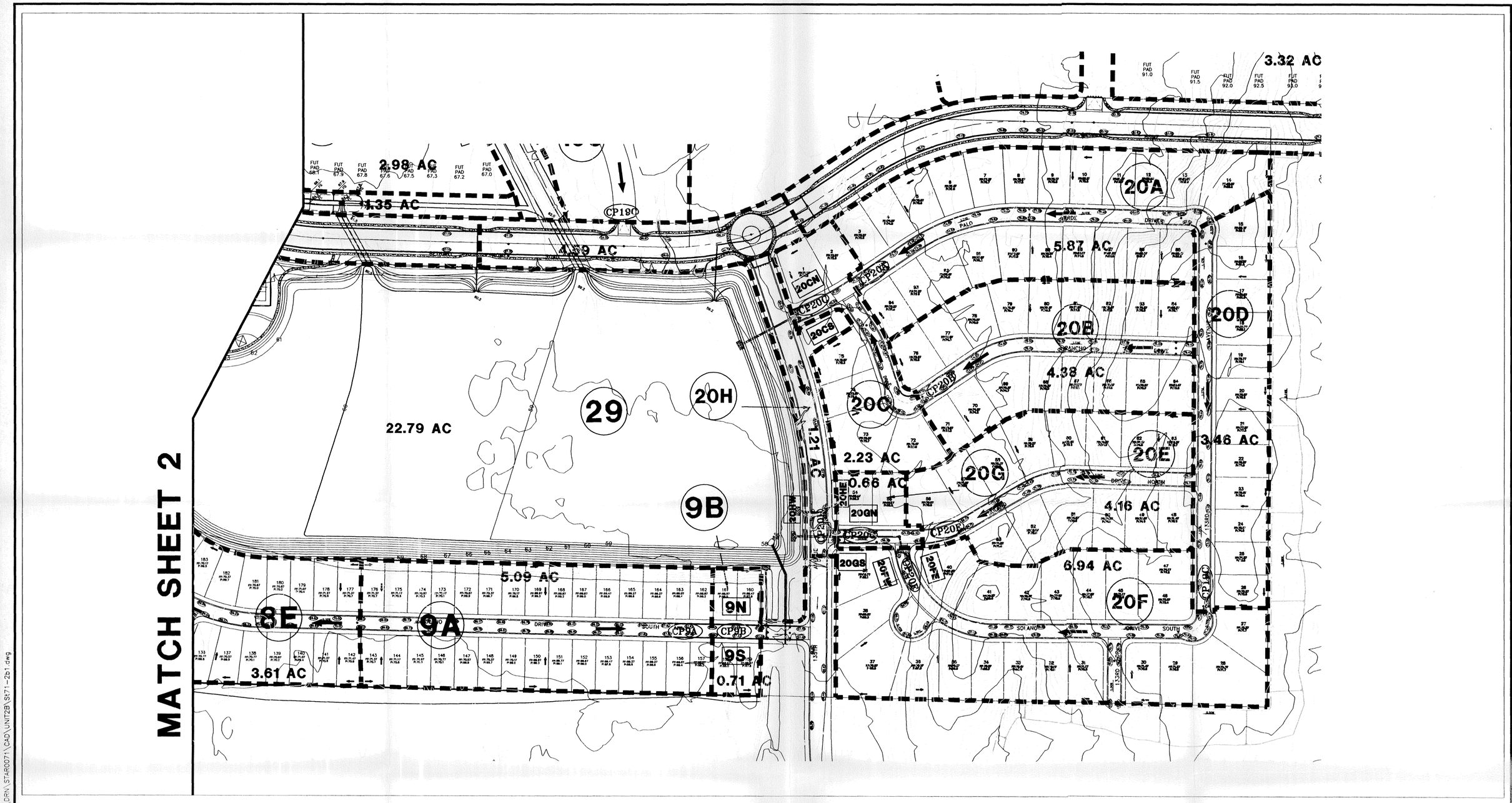

LEGEND

(4)	DRAINAGE AREA DESIGNATION	XX	CATCH BASIN
- - - -	DRAINAGE AREA BOUNDARY LINE	FF: 49.67	MINIMUM FINISH FLOOR ELEVATION
(CP3)	CONCENTRATION POINT	P: 49.0	MINIMUM PAD ELEVATION
←	FLOW DIRECTION	45	LOT NUMBER

0 50' 100' 200'

SCALE: 1"=100'

CALL TWO WORKING DAYS BEFORE YOU DIG 263-1100 BLUE STAKE CENTER

DESIGN BY: SCK
CHECKED BY:
DATE: 8/99

DAVID EVANS AND ASSOCIATES, INC.
7878 N. 16TH STREET, STE #250

DREAMING SUMMIT
FINAL DRAINAGE REPORT
UNIT 2B
EXHIBIT A
ON-SITE DRAINAGE AREA MAP

SCALE: 1"=100'
SECTION: 10,15
TWNSHP: 2N
RANGE: 1W
SHEET 1 OF 2
JOB NO.: STAR0071

STAR0071 sck 08/30/99 14:33:23 sck S:\DRN\STAR0071\CAD\UNIT2B\St71-2b1.dwg

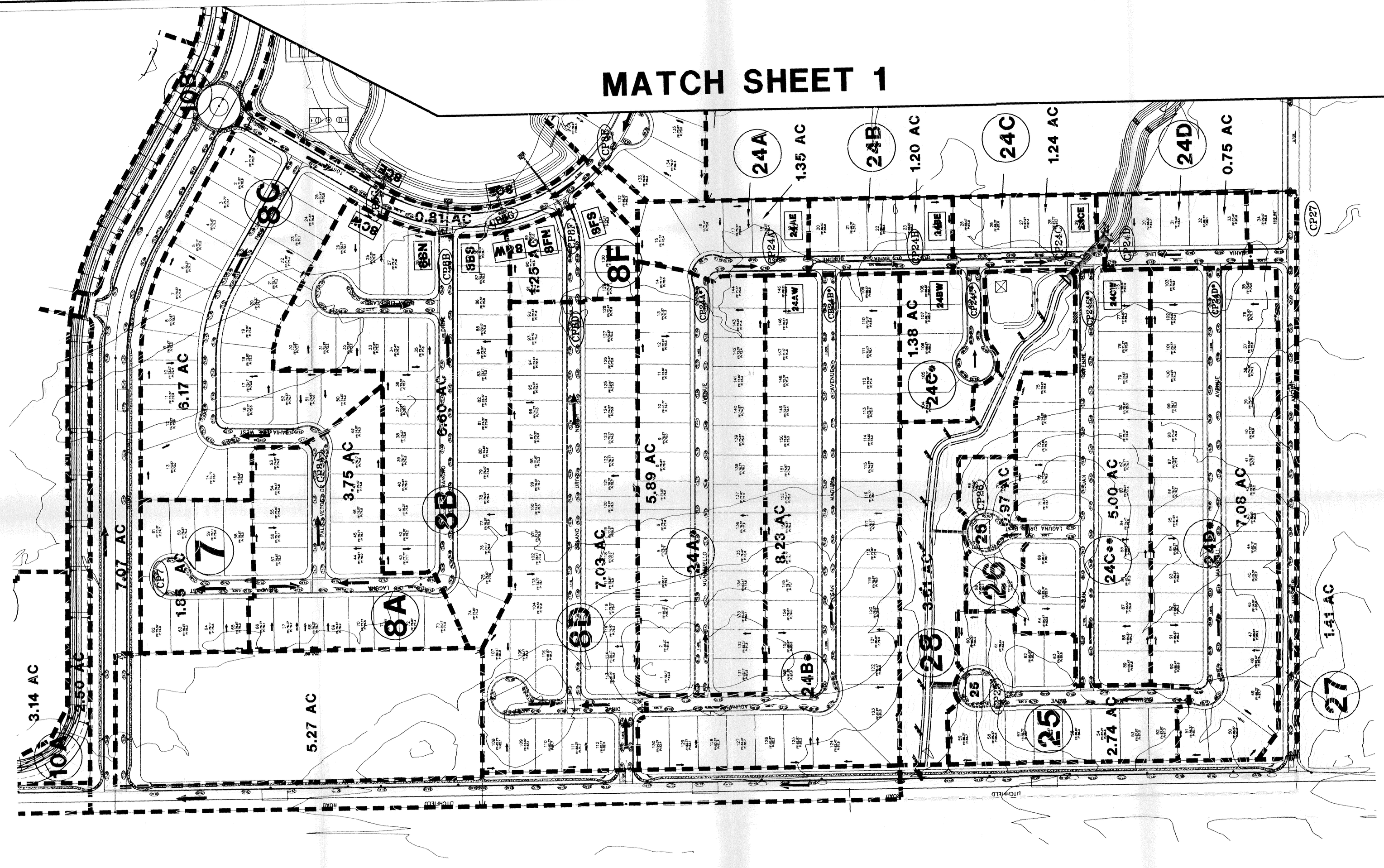

LEGEND

4	DRAINAGE AREA DESIGNATION	XX	CATCH BASIN
	DRAINAGE AREA BOUNDARY LINE	FF: 49.67	MINIMUM FINISH FLOOR ELEVATION
CP3	CONCENTRATION POINT	P: 49.0	MINIMUM PAD ELEVATION
←	FLOW DIRECTION	45	LOT NUMBER

0 50' 100' 200'

SCALE: 1"=100'

CALL TWO WORKING DAYS BEFORE YOU DIG 263-1100 BLUE STAKE CENTER

DESIGN BY: SCK
CHECKED BY:
DATE: 8/99

DAVID EVANS AND ASSOCIATES, INC.
7878 N. 16TH STREET, STE. #250
PHOENIX, AZ 85020-4435 (602) 678-3161

REVISION BY DATE

DREAMING SUMMIT
FINAL DRAINAGE REPORT
UNIT 2B
EXHIBIT A
ON-SITE DRAINAGE AREA MAP

SCALE: 1"=100'
SECTION: 10,15
TWNSHP: 2N
RANGE: 1W
SHEET 2 OF 2
JOB NO.: STAR0071

STAR0071 sck 08/30/99 14:52:03 sck S:\DRN\STAR0071\CAD\UNIT2B\S171-2b2.dwg