DYSART DRAIN COLLECTOR CHANNEL

WELL WATER CROSSING

FLOOD CONTROL DISTRICT OF MARICOPA COUNTY

PROJECT Dysart Drain PAGE 1(A) OF ____

DETAIL Well Water Cross COMPUTED KVH DATE 7/95

Relocation CHECKED BY ____ DATE ____

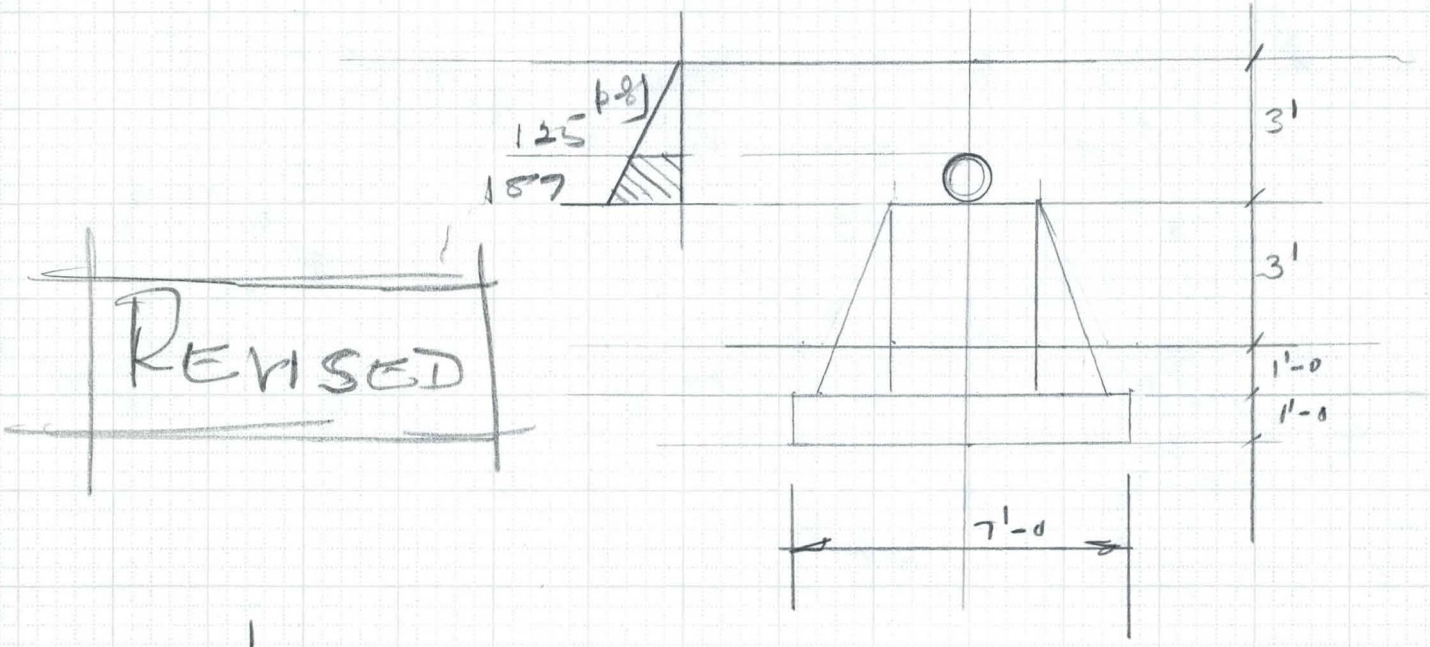

REVISED

Water pr:

pr_1 @ 2' = (62.4 × 2) = 125 plf

pr_2 @ 3' = (62.4 × 3) = 187 plf

Av. pr = (125 + 187)/2 = 156 plf

Length = 16', P = (156 × 16) = 3496 lb

= 2.5 K

FLOOD CONTROL DISTRICT OF MARICOPA COUNTY

PROJECT Dysart Drain PAGE 1 OF ____

DETAIL Well Water Csg. Relocations COMPUTED KVH DATE 6/95

CHECKED BY ____ DATE ____

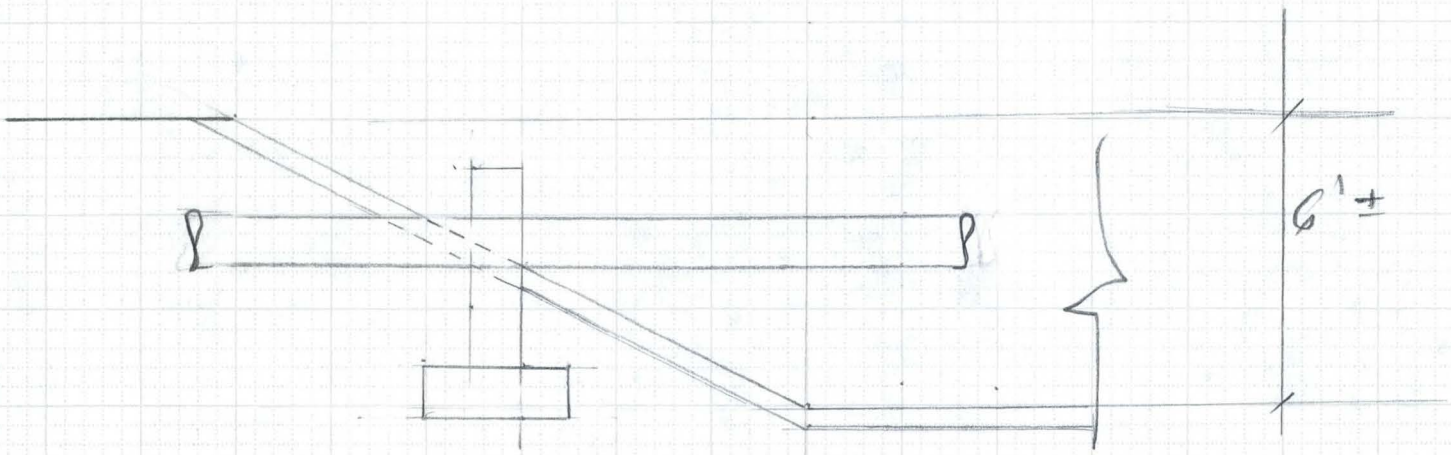

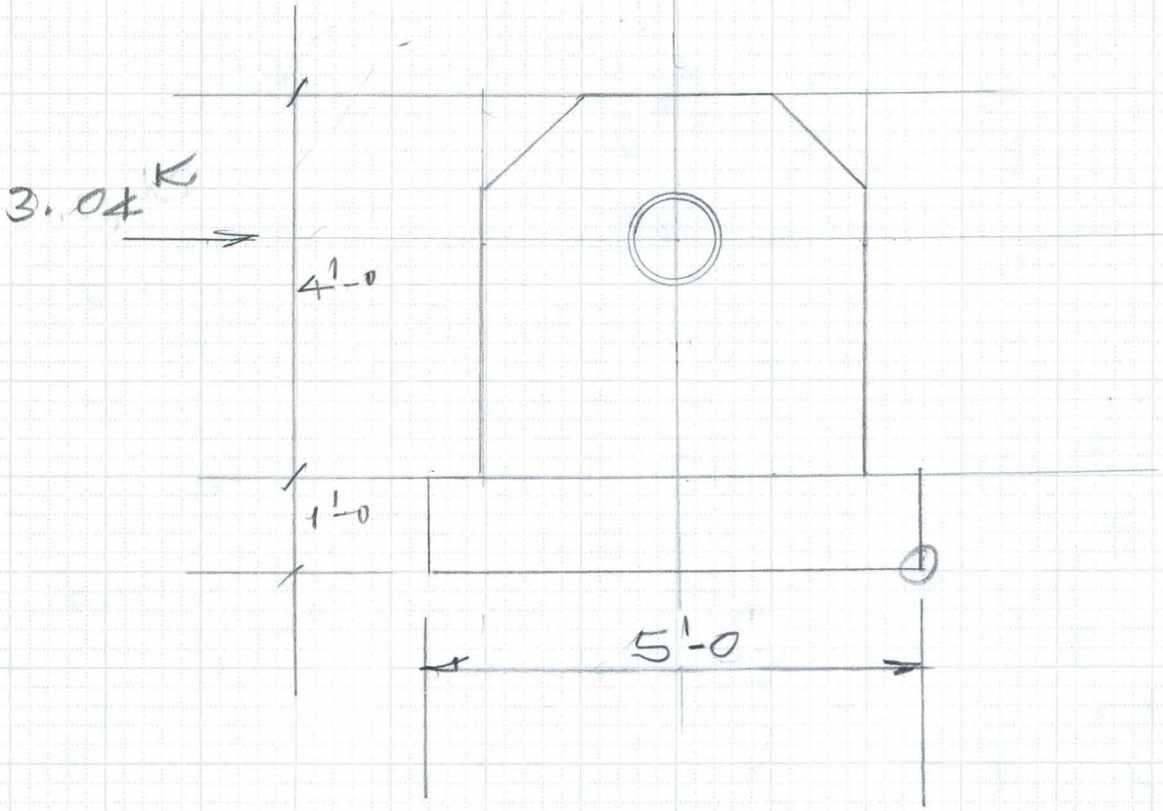

FLOOD CONTROL DISTRICT OF MARICOPA COUNTY

PROJECT Dysart Drain PAGE 2 OF ____

DETAIL Well Water Relocation COMPUTED KVH DATE 7/95

CHECKED BY ____ DATE ____

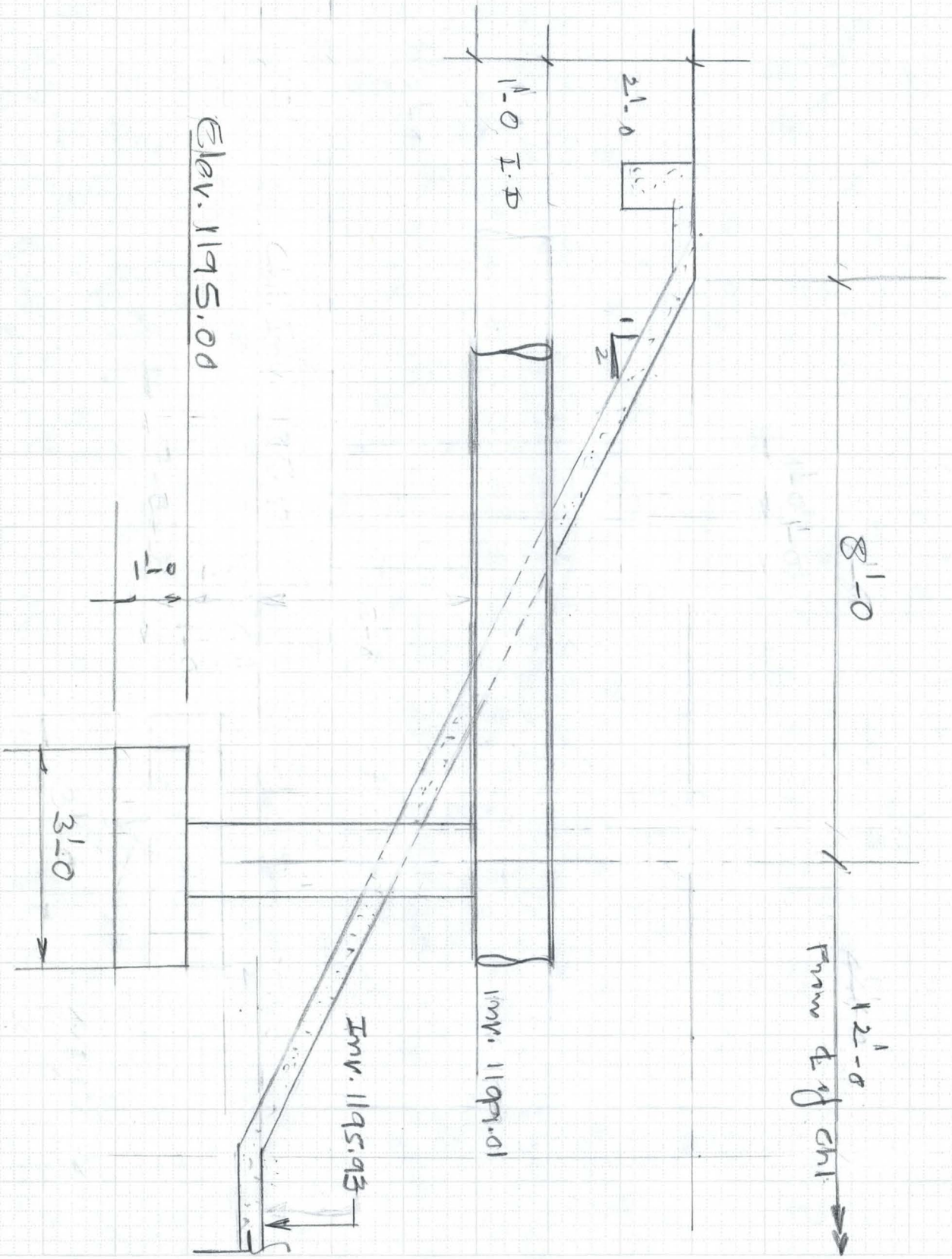

6910-153 4-90

FLOOD CONTROL DISTRICT OF MARICOPA COUNTY

PROJECT Dysart Drain PAGE 3 OF ____

DETAIL Well water Relocation COMPUTED KVH DATE 6/95

CHECKED BY ____ DATE ____

Span = (16' + 6 + 6) = 28' say 30'

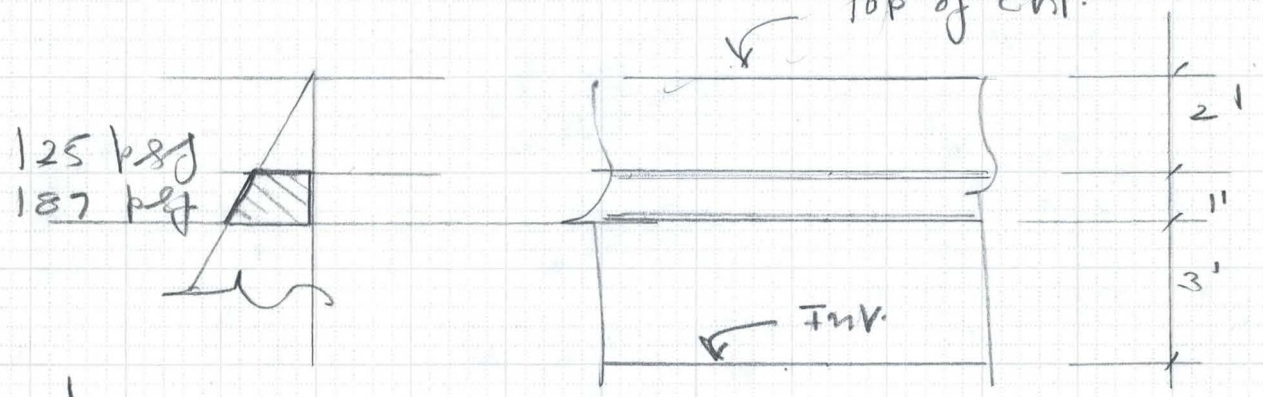

Water pr:

$pr_1 = 62.4 \times 2 = 125$ psf

$pr_2 = (62.4 \times 3) = 187$

$pr\ (Av) = (125 + 187)/2 = 156$ psf

$P = 156 \left(\frac{30}{2} \times 1\right) = 2.34 + 0.3(2.34) = 3.04^{K}$ ← impact

$M_{o.T} = (3.04^{K} \times 3.5) = 10.64^{K\text{-}ft}$

S+B Mom:

wt. of wall = $(4 \times 1)\ 4 \times 0.15 = 2.4^{K}$

ftg. = $(5 \times 1 \times 3)\ 0.15 = 2.25$

Pipe = $(50\ lbs/ft) \times 15 = 0.75$

Soil = $[(5 \times 3) - (4 \times 1)]\ 2 \times 0.12 = 2.64$ ← Av. fill

8.04^{K}

$M_{STB} = (8.04 \times 2.5) + 20.1$ K-ft

$F.S = \frac{20.1}{10.64} = 1.9$

Check Stresses using Steel pipe

Span = (16 + 8.5 + 8.5) = 33'

using standard wt pipe 50 lbs/ft

wt. of water 62.4

112.4

100

212.4 pcf

L.L

a) Direct Bending

$M_S = \left(212.4 \times \frac{33^2}{8}\right) = 28.91$ K-ft

Section Mod S = 43.8

$f_1 = \frac{28.91 \times 12}{43.8} = 7.92$ Ksi

b) Bending - Water pr:

pr = 156 pcf $M_S = \frac{0.156 \times 33^2}{8} = 21.24$ K-ft

$f_2 = \frac{21.24 \times 12}{43.8} = 5.82$ Ksi

Allow Bending Grade A 53

$f_{(allow)} = 0.6 \times 53 = 31.8$ Ksi

$f_{(actual)} = \sqrt{7.92^2 + 5.82^2} = 9.8$ Ksi

Footing Check:

Load = 212.4 kip

Load at footpoint:

		lbs
	212.4 (12+4) =	3398
wall wt	= ((1×4) 4) 150 =	2400
Ftg wt	= (3×1×5) 150 =	2250
Soil wt	= [(5×3) − (4×1)] 3×120 =	3960
		12008 lbs

$$q_r = \frac{12008}{5 \times 3} = 800 \text{ psf}$$

Net q_r = (800 − 1×150)
= 650 psf

$$M_{AA} = (650 \times 1 \times 0.5)$$
$$= 0.33 \text{ K-ft}$$

$$A_s = \frac{0.33 \times 12}{24 \times 0.85 \times 8.5}$$
$$= 0.02 \text{ in}^2$$

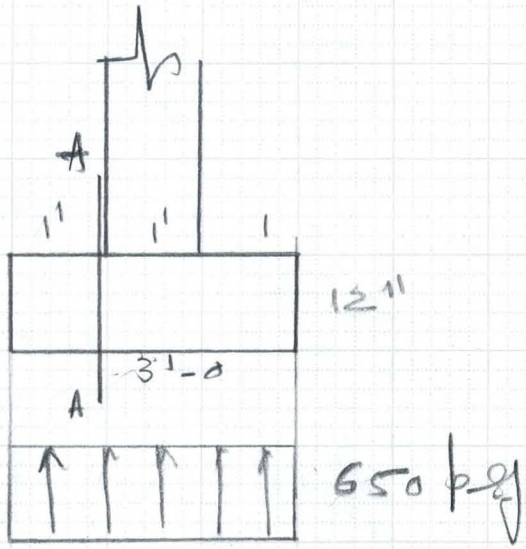

Min Steel, use # 6 @ 12" ∓
5 @ 12"

FLOOD CONTROL DISTRICT OF MARICOPA COUNTY

PROJECT Dysart Drain PAGE 6 OF ____

DETAIL Wall Water Relocation COMPUTED KGVH DATE 6/95

CHECKED BY ____ DATE ____

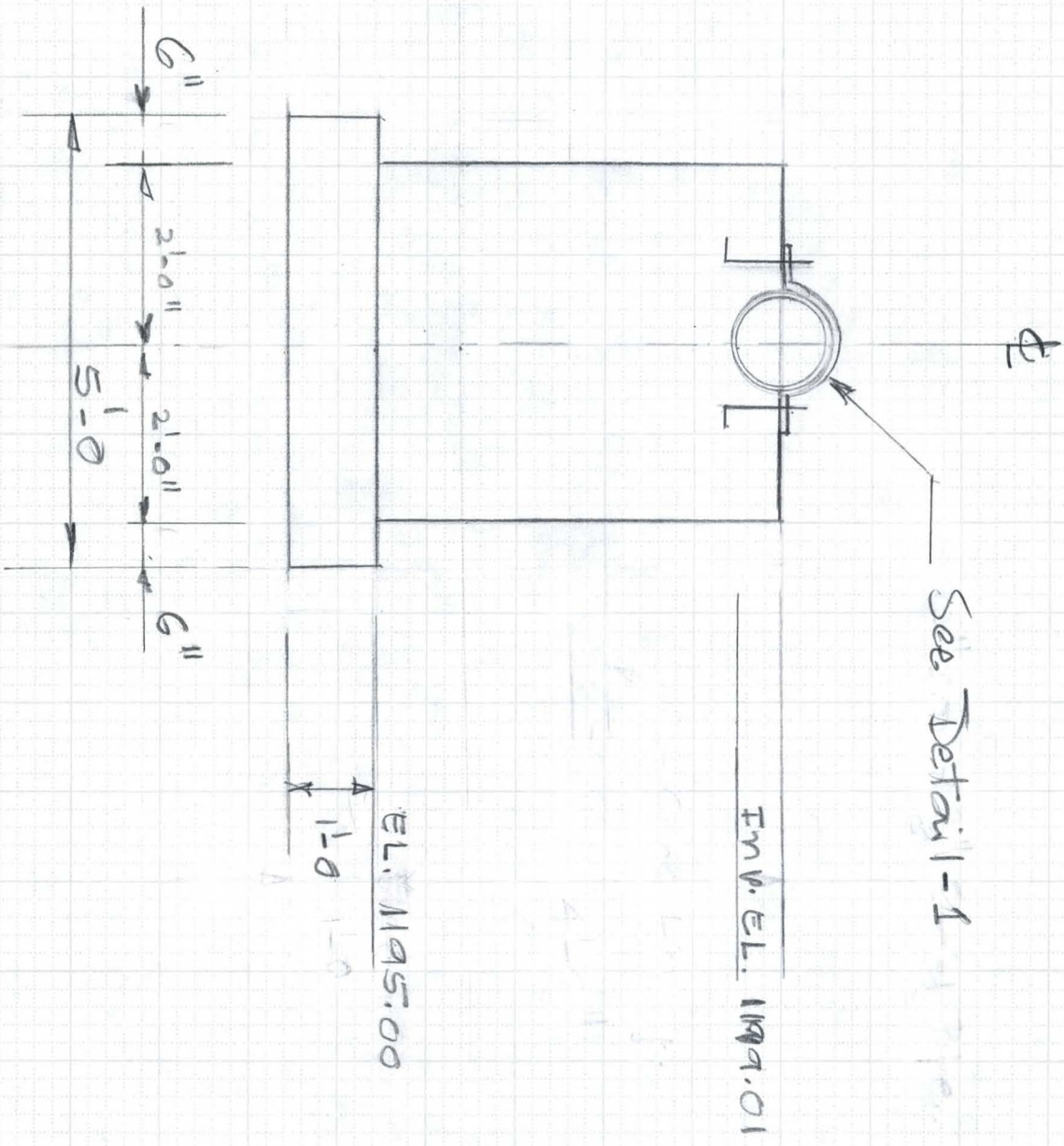

SECTION B-B
Scale: 1/2" = 1'-0

FLOOD CONTROL DISTRICT OF MARICOPA COUNTY

PROJECT Dysart Drain PAGE 7 OF

DETAIL Well Water Relocation COMPUTED KVH DATE 7/95

CHECKED BY DATE

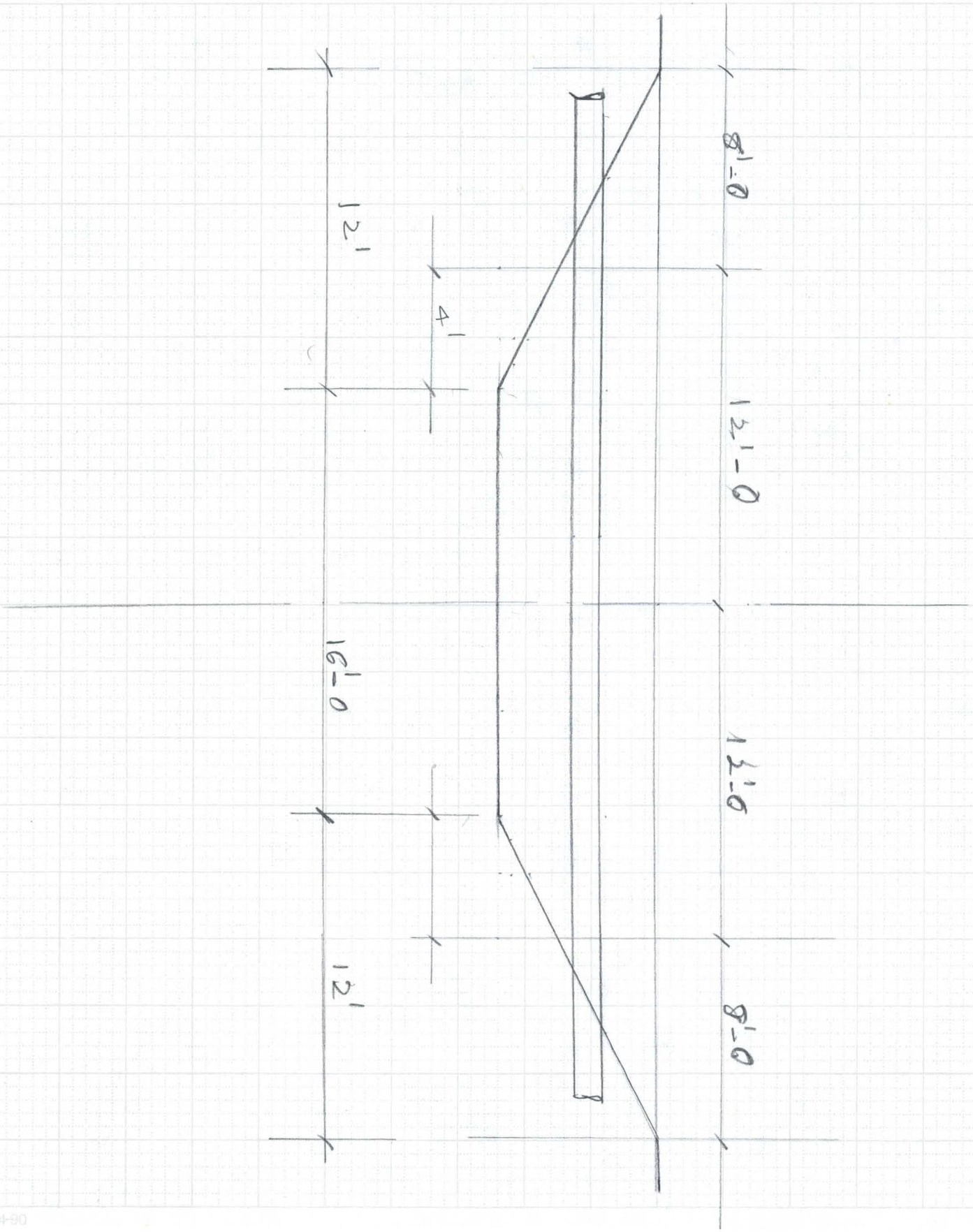

FLOOD CONTROL DISTRICT OF MARICOPA COUNTY

PROJECT Dysart Drain PAGE 10 OF _____

DETAIL Well Water Grasg COMPUTED KVH DATE 7/95

Relocation CHECKED BY _____ DATE _____

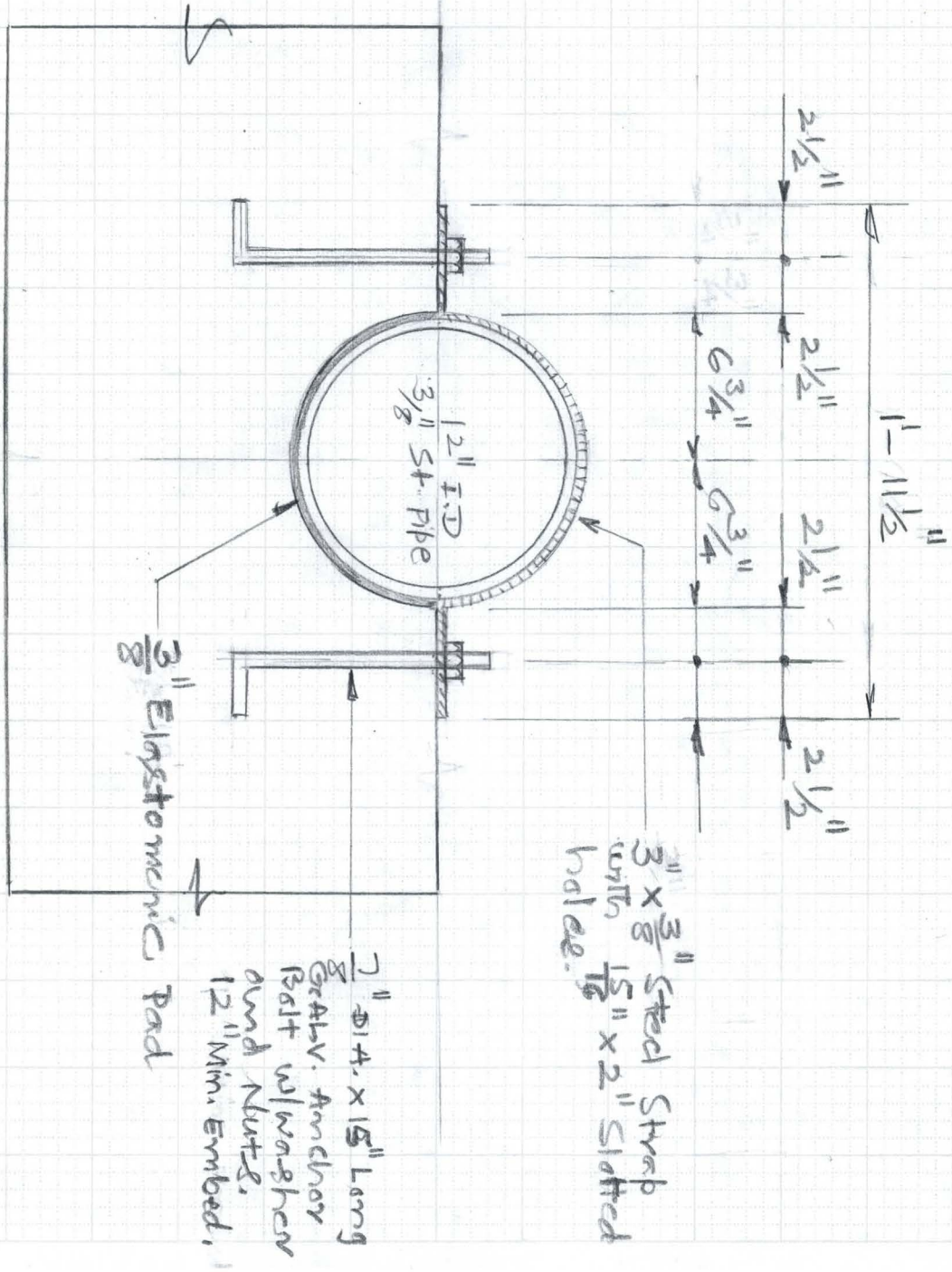

DETAIL. 1
Scale: 1 1/2" = 1'-0

FLOOD CONTROL DISTRICT OF MARICOPA COUNTY

PROJECT Dysart Drain PAGE 9 OF ____

DETAIL Wall Water Relocation COMPUTED KVH DATE 6/95

CHECKED BY ____ DATE ____

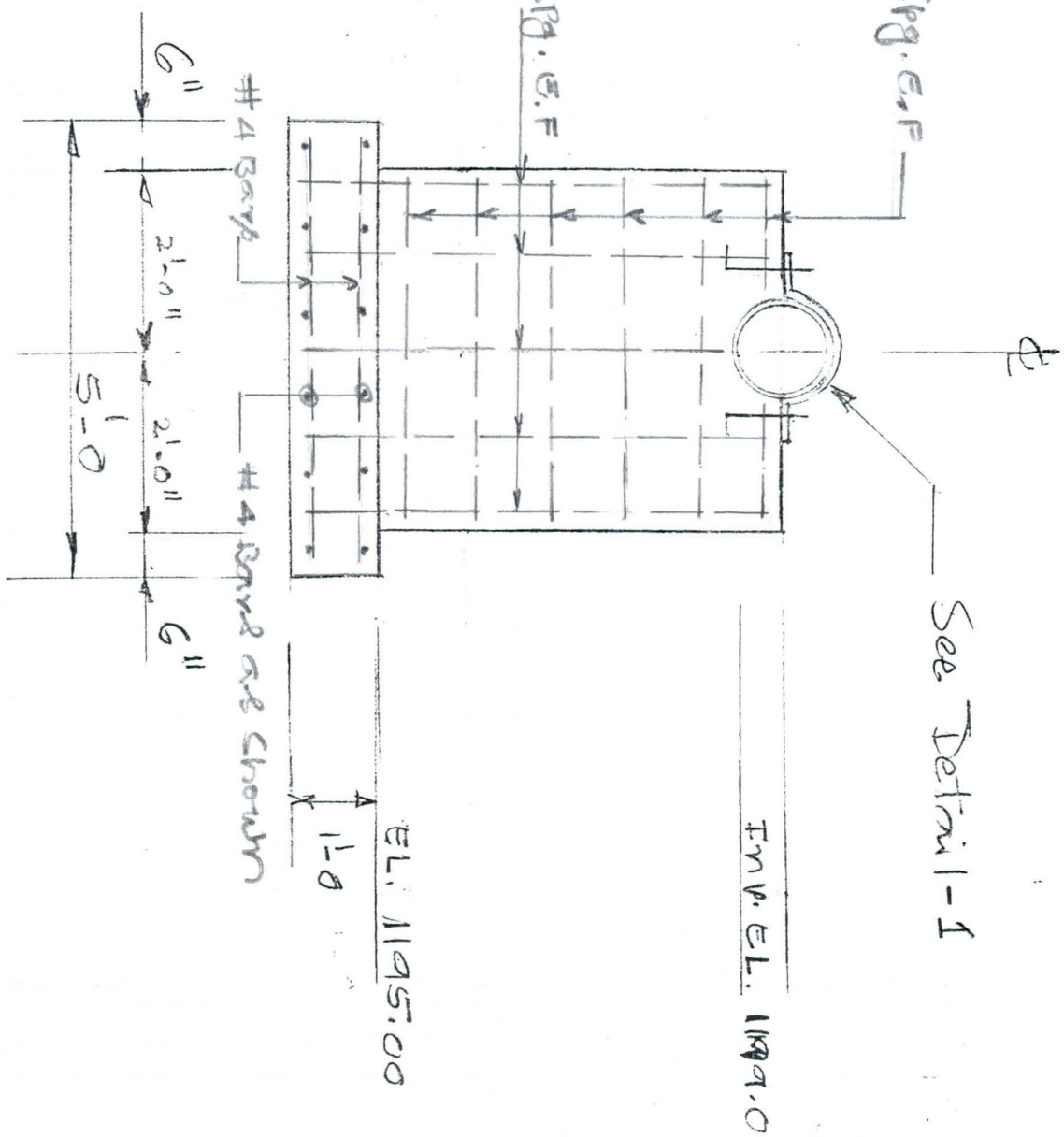

SECTION B-B
Scale: 1/2" = 1'-0

FLOOD CONTROL DISTRICT OF MARICOPA COUNTY

PROJECT Dysart Drain PAGE 8 OF

DETAIL Well Water Relocation COMPUTED KVH DATE

CHECKED BY DATE

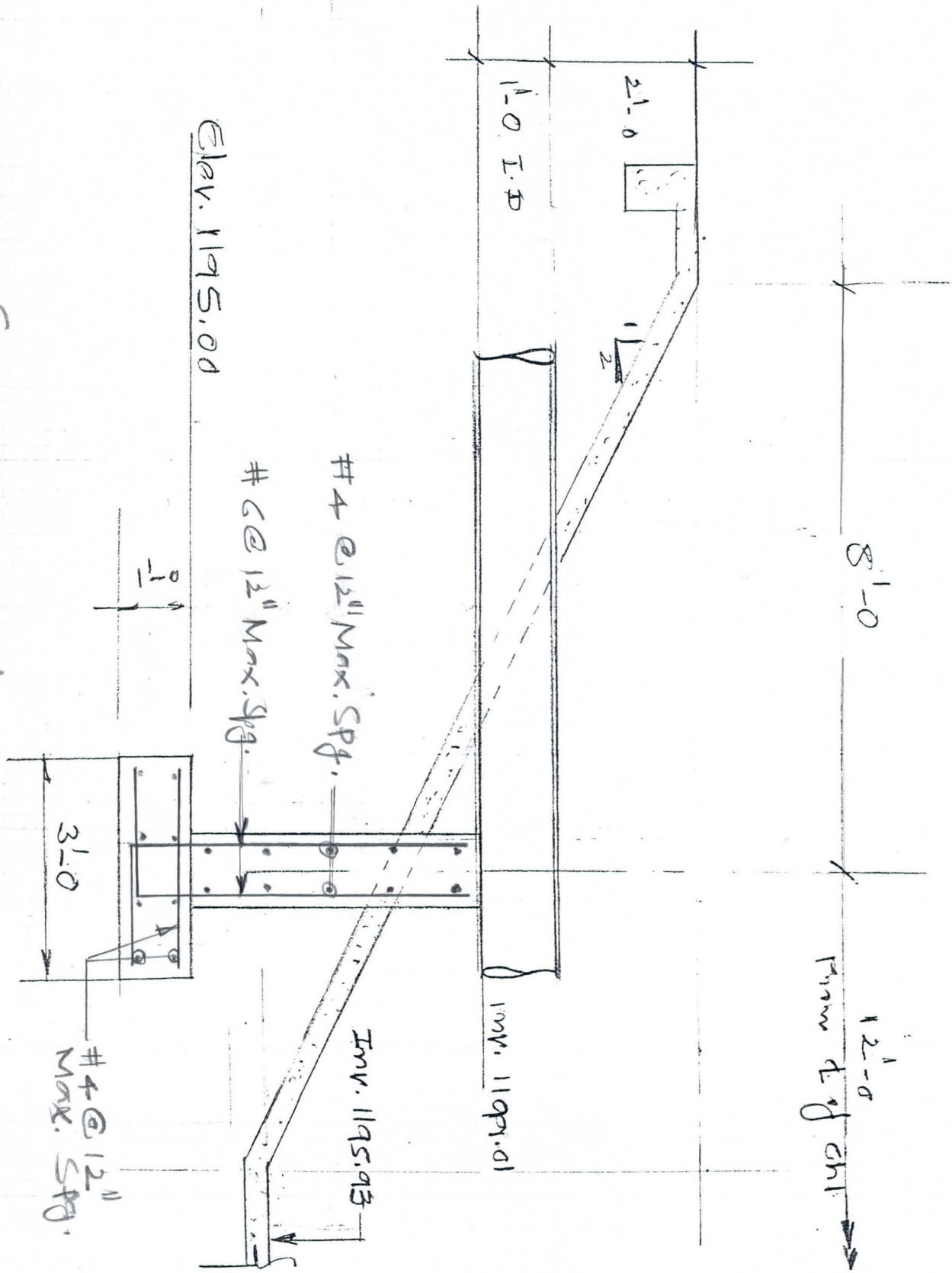

SECTION A-A
Scale: 1/2" = 1'-0

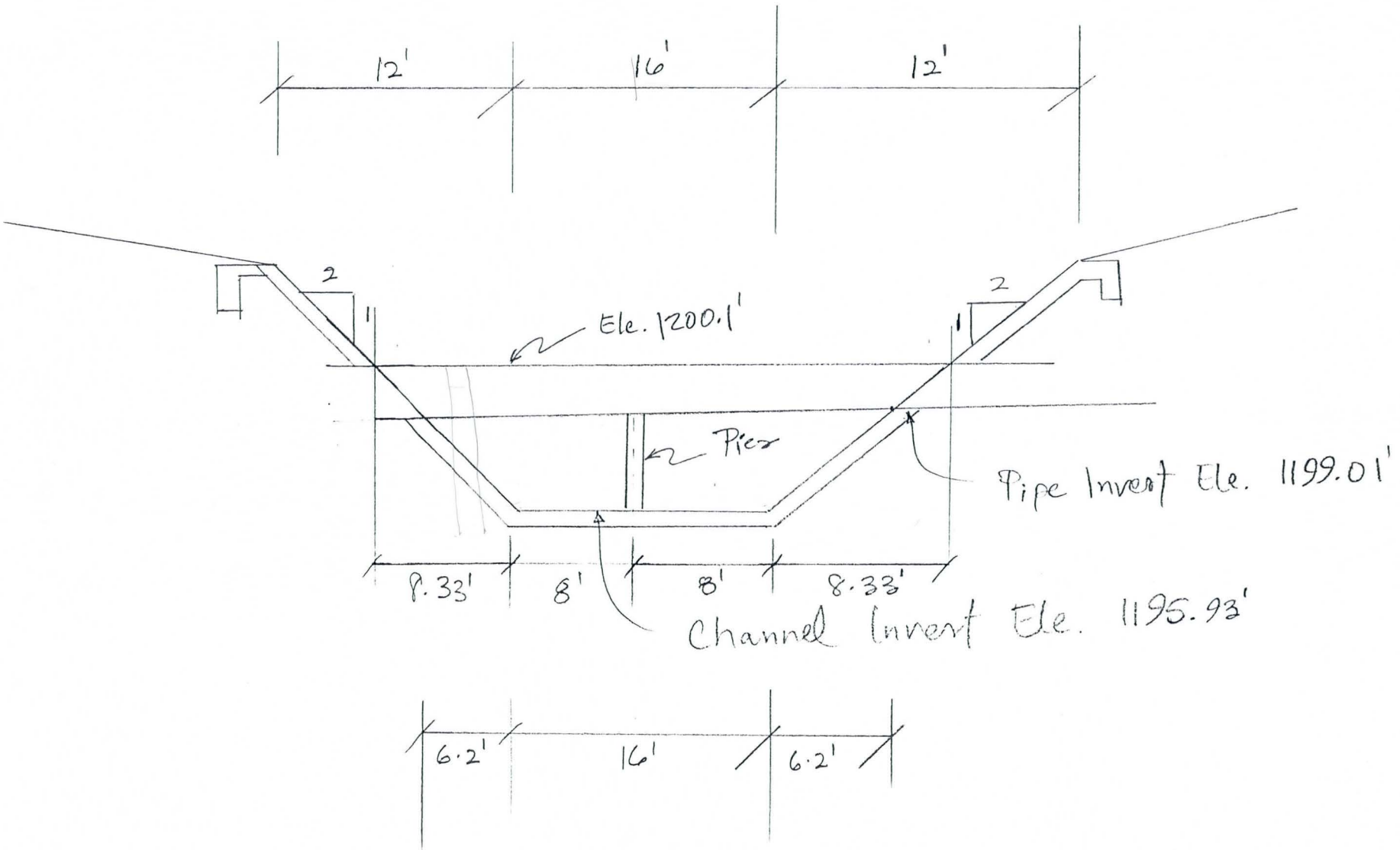
12'
16'
12'
2
1
2
1
Ele. 1200.1'
Pier
Pipe Invert Ele. 1199.01'
8.33'
8'
8'
8.33'
Channel Invert Ele. 1195.93'
6.2'
16'
6.2'

ELEV. = 1104.20

ELEV. = 1104.80

1" = 40'

Page. 12

FLOOD CONTROL DISTRICT OF MARICOPA COUNTY

PROJECT DYSART DRAIN FCD 94-38 PAGE 1 OF 3

DETAIL OUTLET STRUCTURE COMPUTED _____ DATE 11/14/96

_____ CHECKED BY _____ DATE _____

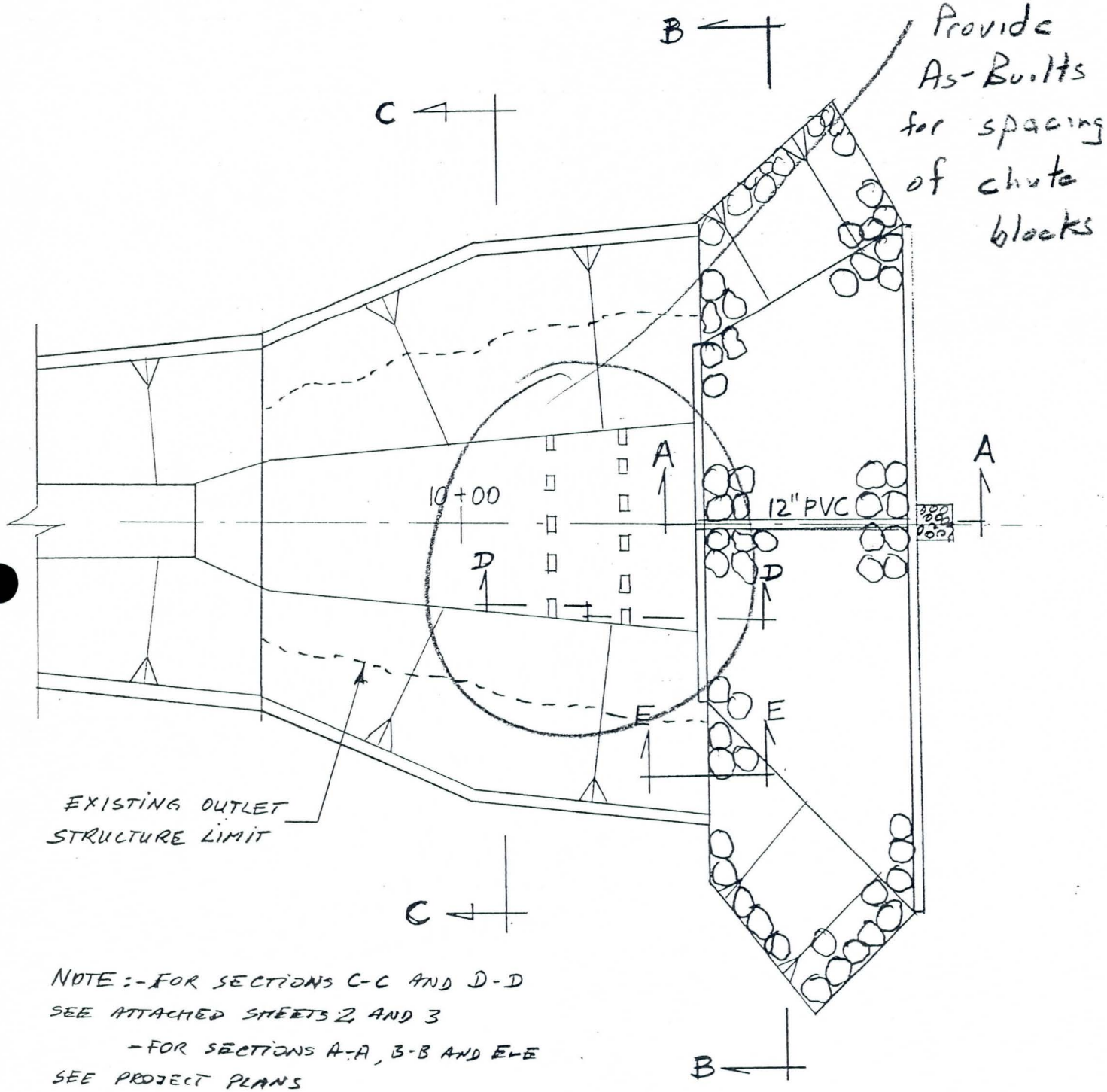

NOTE :- FOR SECTIONS C-C AND D-D SEE ATTACHED SHEETS 2 AND 3

- FOR SECTIONS A-A, B-B AND E-E SEE PROJECT PLANS

PLAN

1" = 20'

FLOOD CONTROL DISTRICT OF MARICOPA COUNTY

PROJECT DYSART DRAIN FCD 94-38 PAGE 2 OF 3

DETAIL OUTLET STRUCTURE COMPUTED _____ DATE 11/14/96

_____ CHECKED BY _____ DATE _____

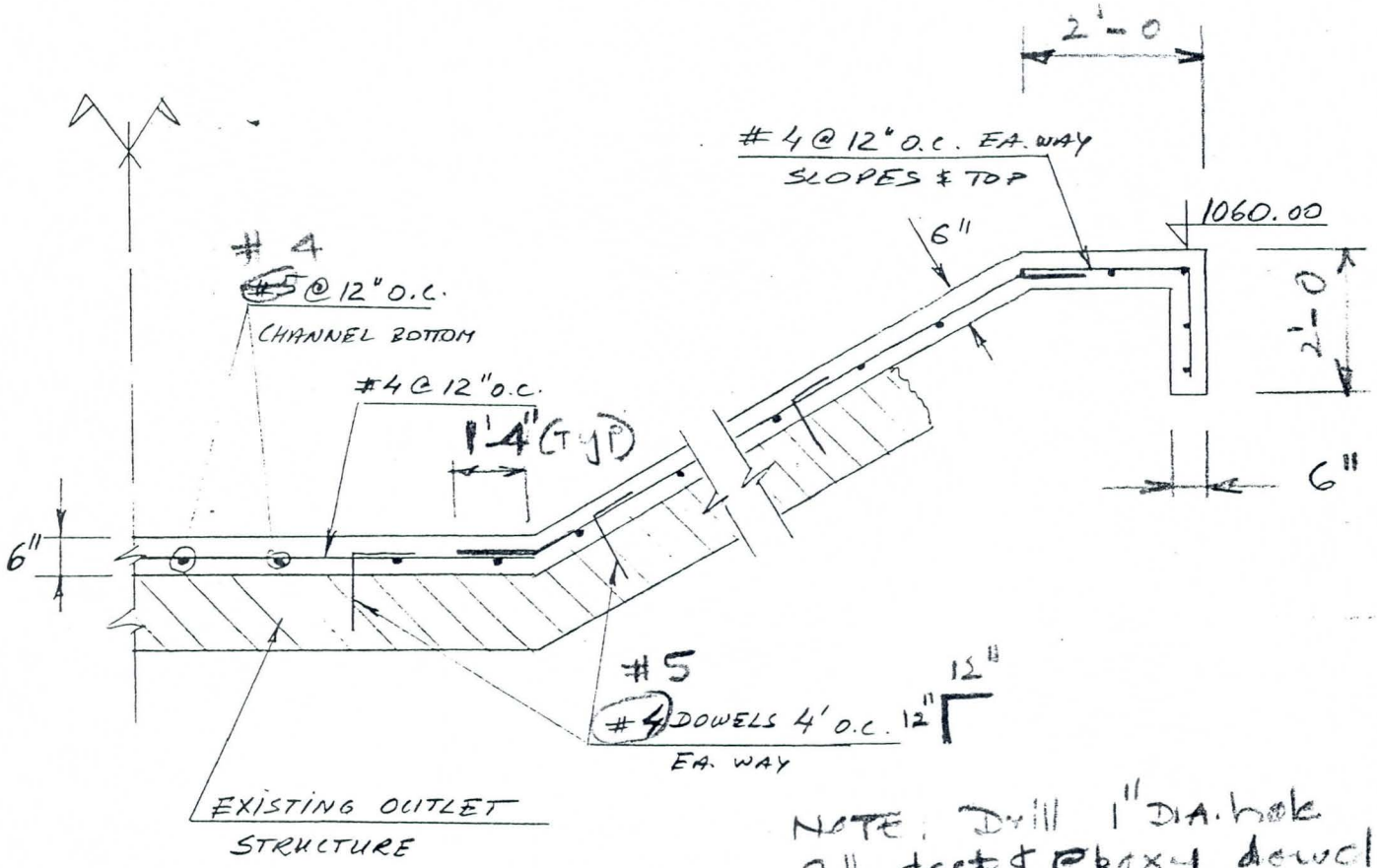

NOTE: Drill 1" DIA. hole 9" deep & Epoxy dowel with an approved Epoxy adhesive.

SECTION C-C

NOT TO SCALE

FLOOD CONTROL DISTRICT OF MARICOPA COUNTY

PROJECT DYSART DRAIN FCD 94-38 PAGE 3 OF 3

DETAIL OUTLET STRUCTURE COMPUTED _____ DATE 11/14/96

_____ CHECKED BY _____ DATE _____

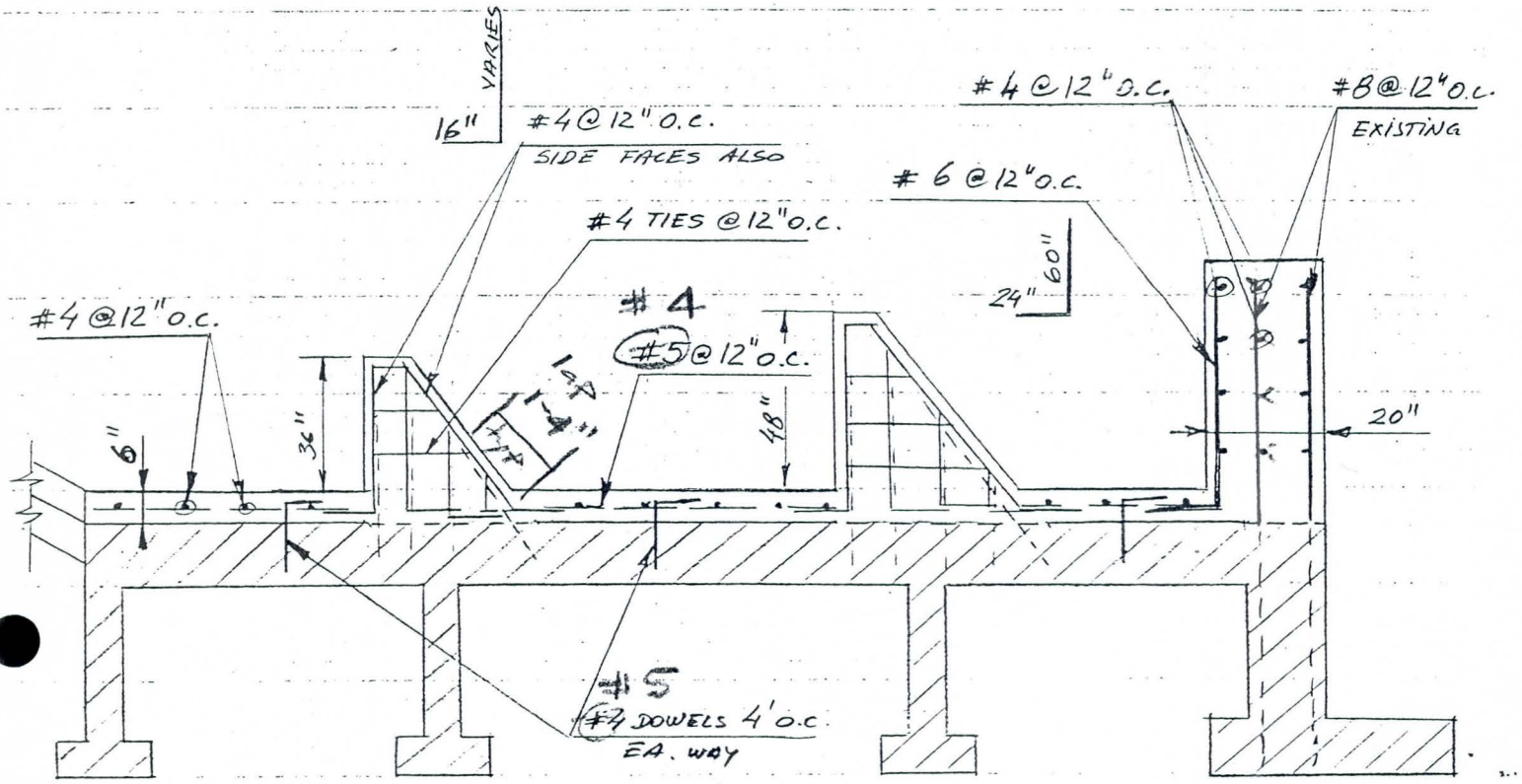

SECTION D-D

NOT TO SCALE

FLOOD CONTROL DISTRICT OF MARICOPA COUNTY

PROJECT DYSART DRAIN FCD 94-38 PAGE 1 OF 3

DETAIL OUTLET STRUCTURE COMPUTED _____ DATE 11/14/96

_____ CHECKED BY _____ DATE _____

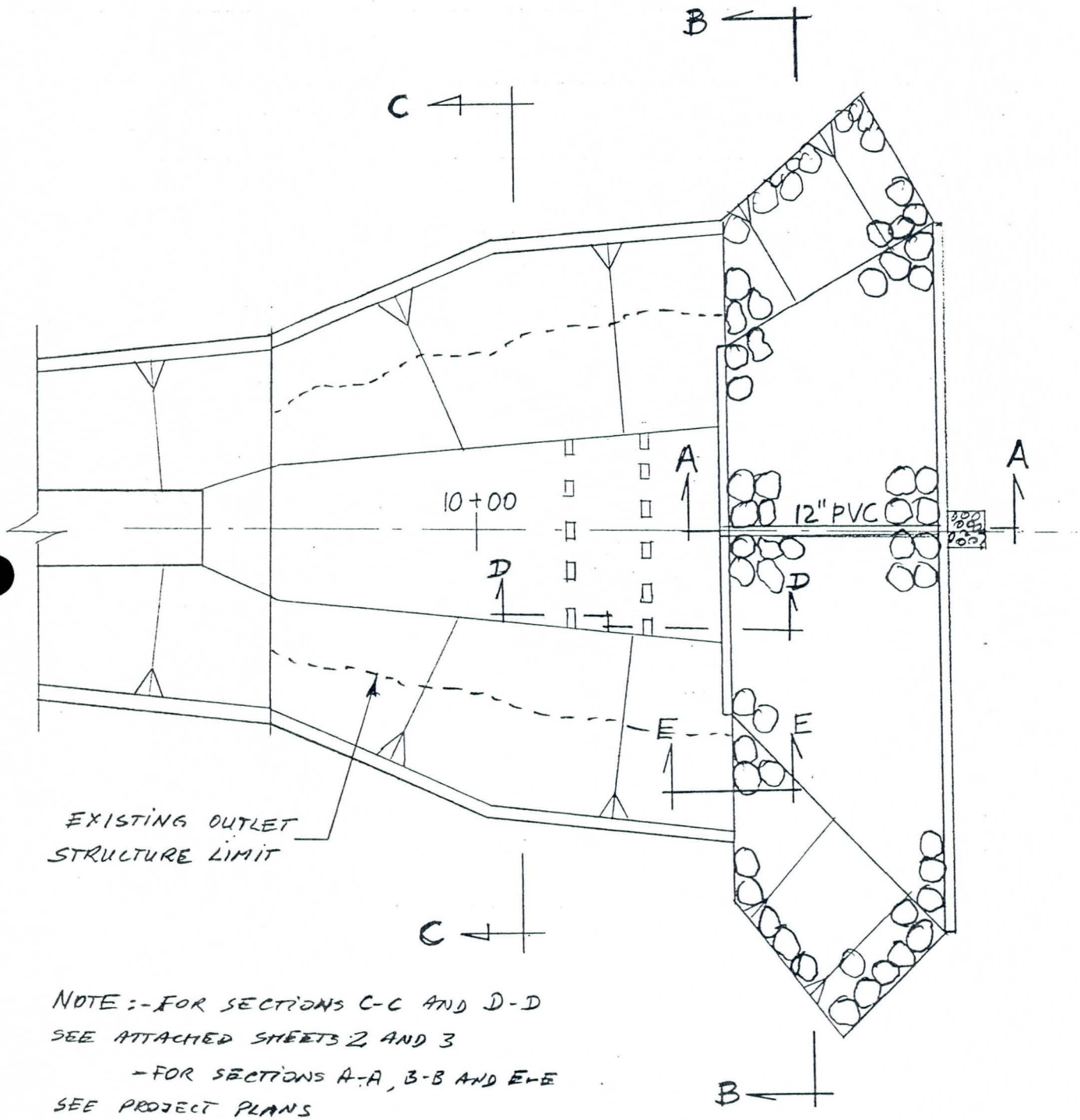

NOTE :- FOR SECTIONS C-C AND D-D SEE ATTACHED SHEETS 2 AND 3

- FOR SECTIONS A-A, B-B AND E-E SEE PROJECT PLANS

PLAN

1" = 20'

FLOOD CONTROL DISTRICT OF MARICOPA COUNTY

PROJECT DYSART DRAIN FCD 94-38 PAGE 2 OF 3

DETAIL OUTLET STRUCTURE COMPUTED _____ DATE 11/14/96

_____ CHECKED BY _____ DATE _____

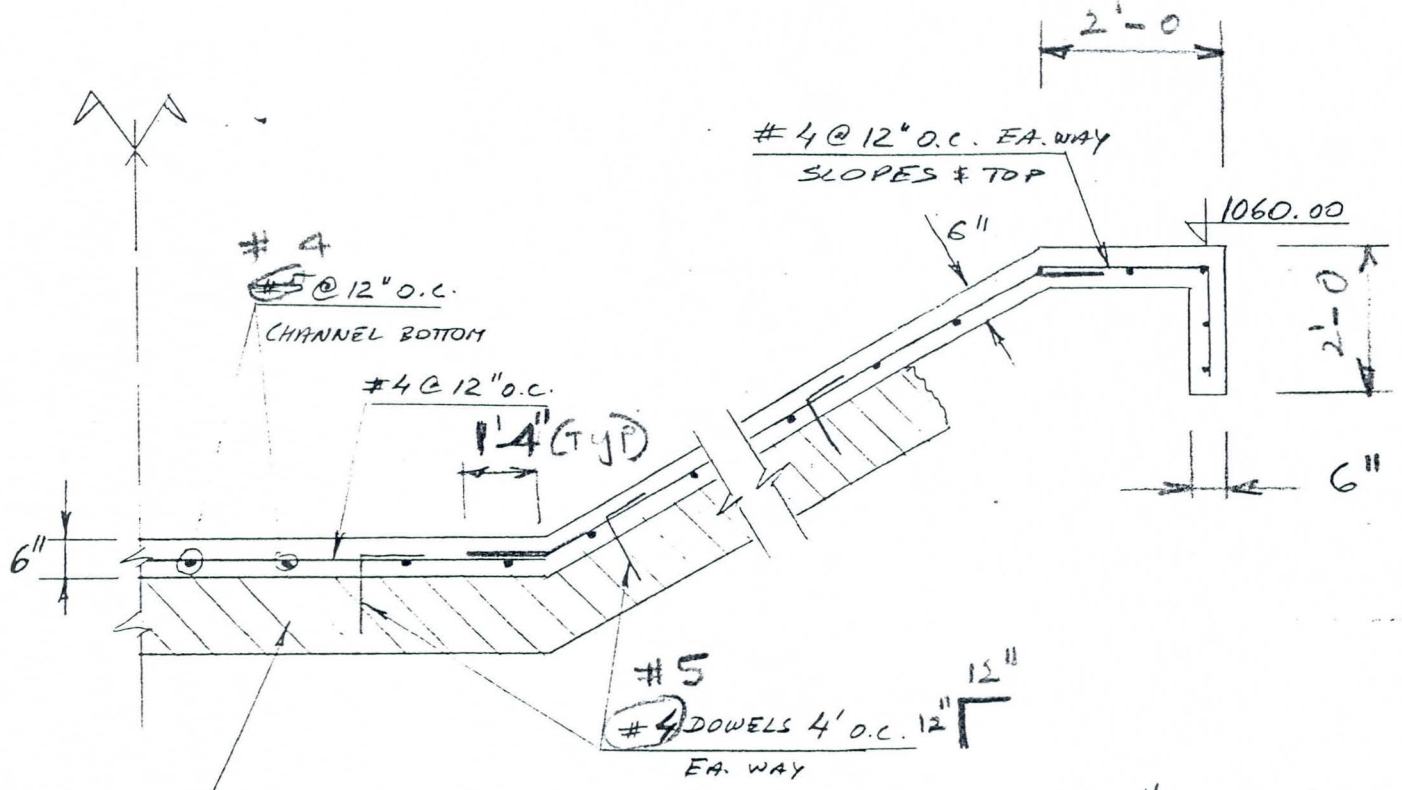

NOTE: Drill 1" DIA. hole 9" deep & epoxy dowel with an approved epoxy adhesive.

SECTION C-C

NOT TO SCALE

FLOOD CONTROL DISTRICT OF MARICOPA COUNTY

PROJECT DYSART DRAIN FCD 94-38 PAGE 3 OF 3

DETAIL OUTLET STRUCTURE COMPUTED _____ DATE 11/14/96

_____ CHECKED BY _____ DATE _____

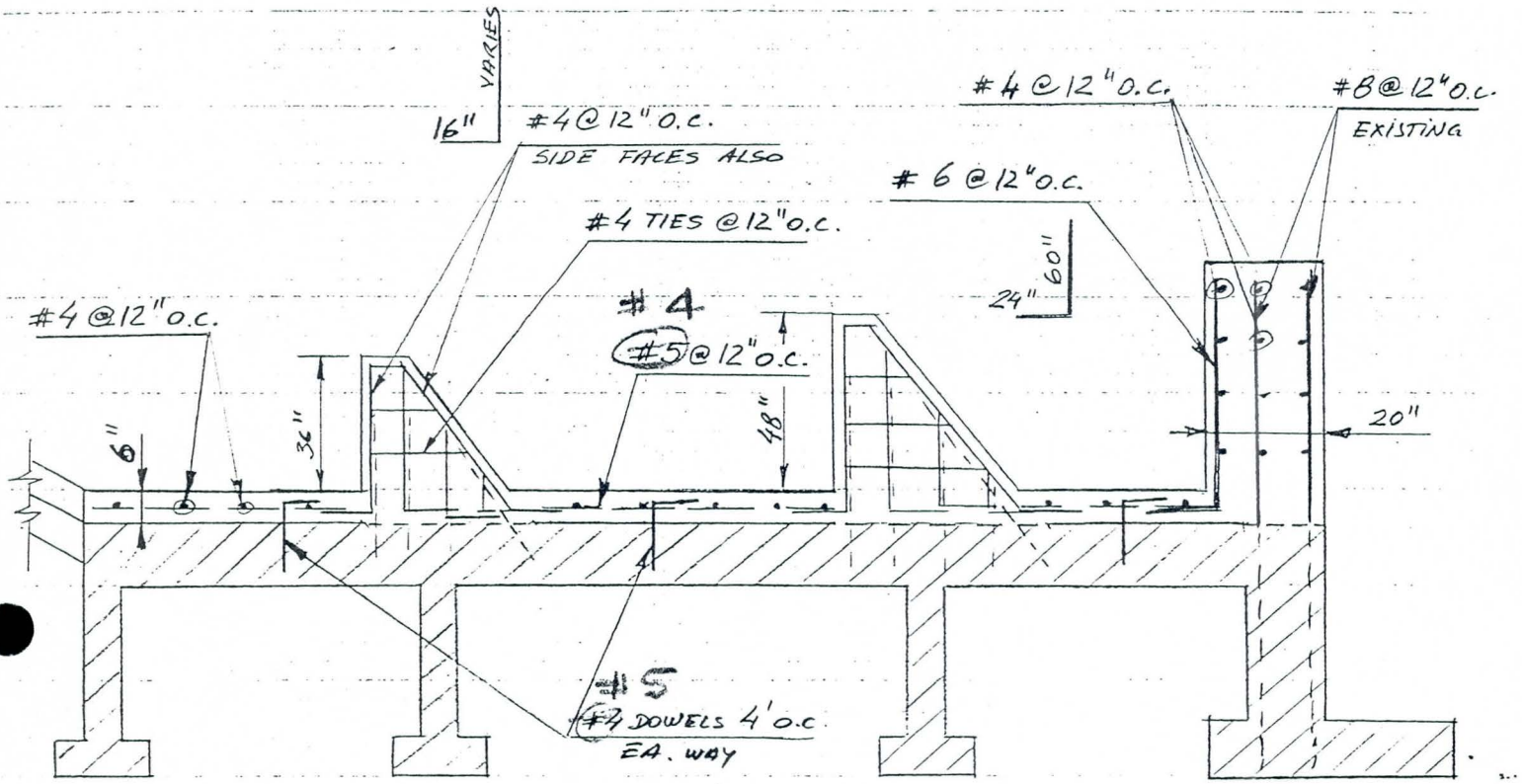

SECTION D-D

NOT TO SCALE

FLOOD CONTROL DISTRICT OF MARICOPA COUNTY

PROJECT Dysart Channel PAGE ___ OF ___

DETAIL Stilling Basin COMPUTED KVH DATE 11/96

CHECKED BY ___ DATE ___

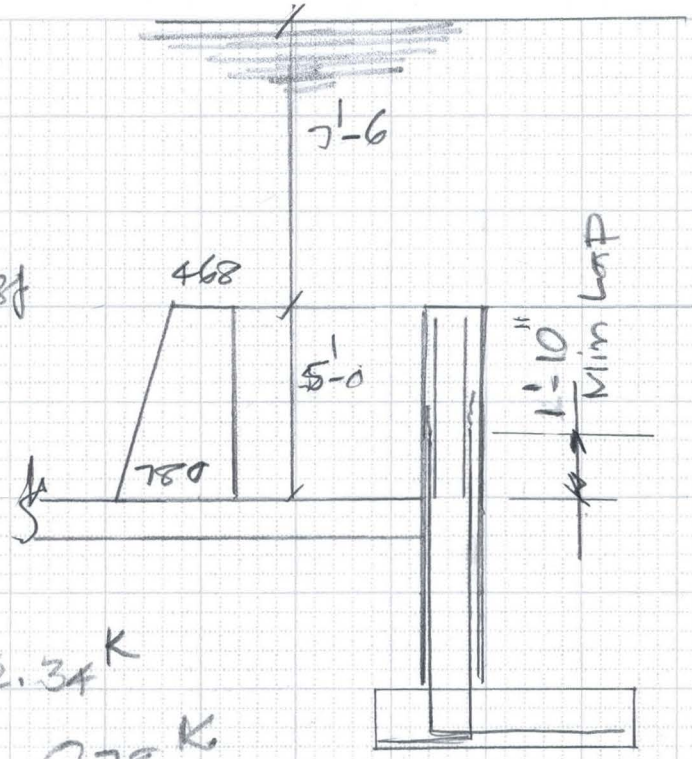

$Ht = 12'-6$

$pr_1 = 62.4 \times 7.5 = 468 psf$

$pr_2 = 62.4 \times 12.5 = 780$

$P_1 = (468 \times 5) = 2.34^K$

$P_2 = \frac{(780-468)}{2} \times 5 = 0.78^K$

$M = (2.34 \times \frac{5}{2}) + 0.78 \times \frac{5}{3} = 7.15^{Kft}$

$d = (16 - 2 - 0.5) = 13.5''$

$As = \frac{7.15 \times 12}{24 \times 0.88 \times 13.5}$

$= 0.30 in^2$

Use #6 @ 12", As = 0.44

Lap #5, $(0.8 \times 26) = 21''$

Lap #6, $(0.8 \times 33) = 26$

Avg Lap = $(21+26)/2 \approx 24''$

Use a 1'-10" Lap as we only need #5 bars & providing #6 Bars.

1104.

20'-0"

NEW P.C.E.

5'

49.94'

Sta 9+10

48.36'

NEW P.C.E.

5'

NEW P.C.E.

45°

45°

11'

A

A

B

B

1

1

20'

20'

8'-0

12'-0

12'-0

8'-0

℄ STA 9+40

FLOOD CONTROL DISTRICT OF MARICOPA COUNTY

PROJECT Dysart Drain PAGE 1 OF ____

DETAIL Well Water X-ing COMPUTED KVH DATE 5/95

CHECKED BY ____ DATE ____

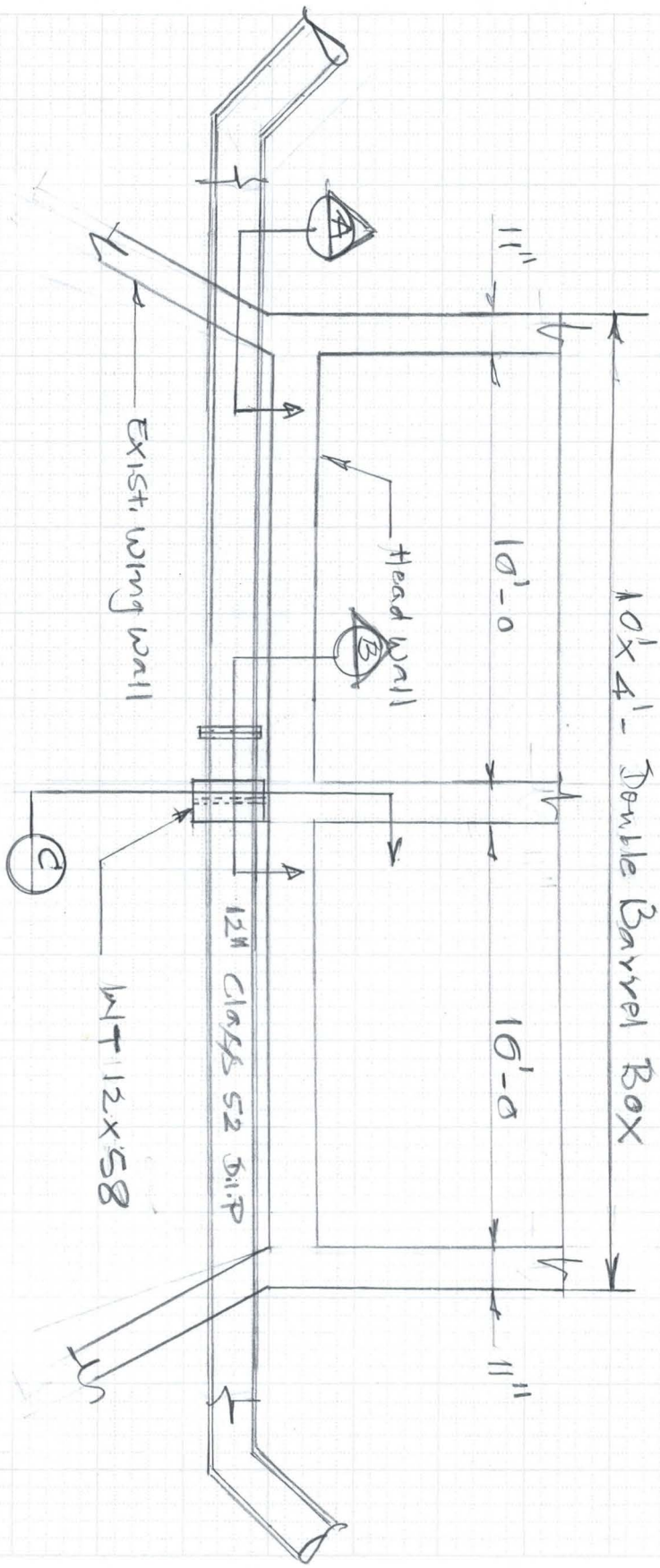

DETAIL - 1

Scale: 1/4" = 1'-0

FLOOD CONTROL DISTRICT OF MARICOPA COUNTY

PROJECT Dysart Drain PAGE 2 OF ____

DETAIL Well water X-ing COMPUTED KVH DATE 5/95

CHECKED BY ____ DATE ____

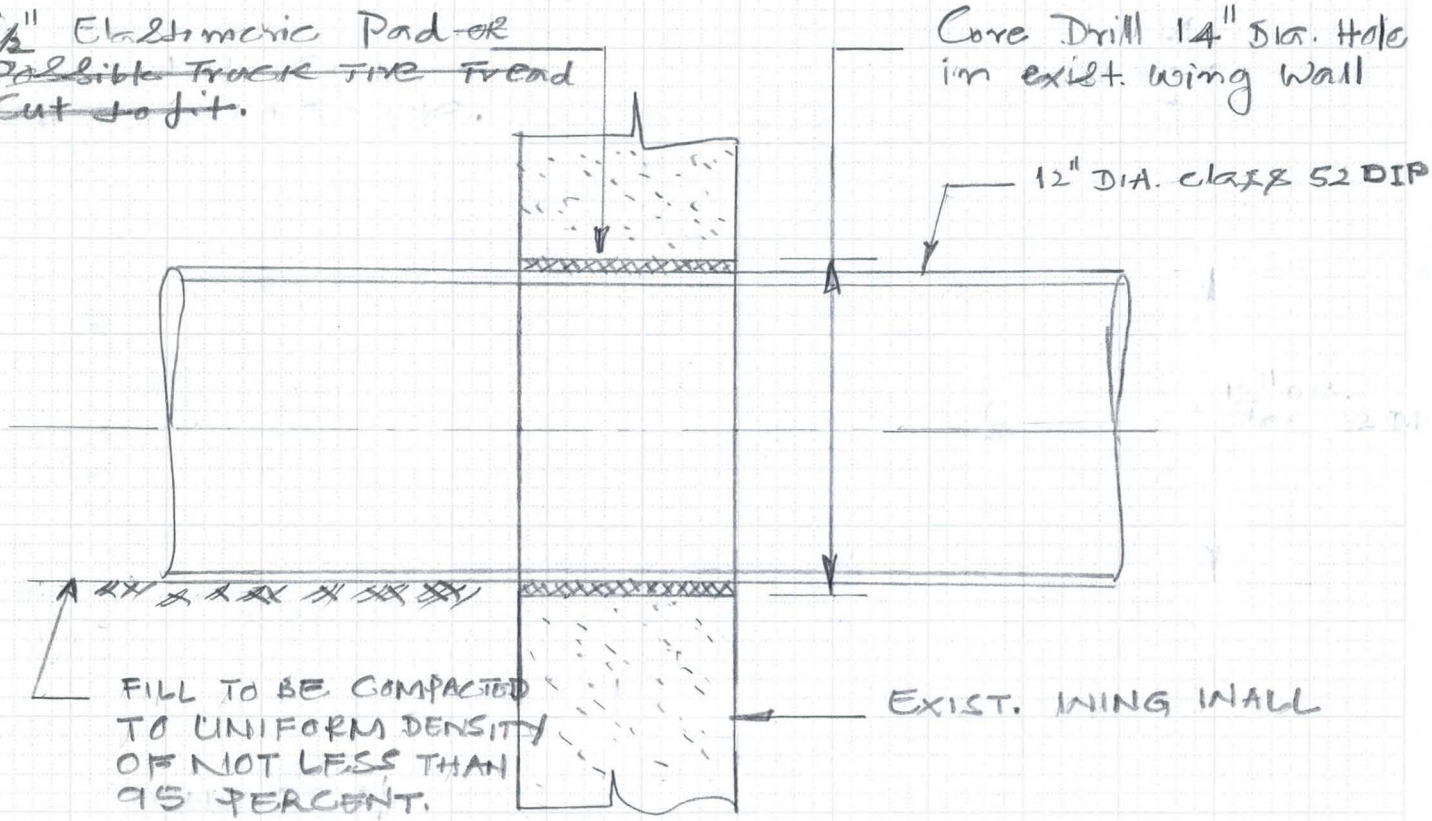

SECTION - A

Scale: 1½" = 1'-0

FLOOD CONTROL DISTRICT OF MARICOPA COUNTY

PROJECT Dysart Drain PAGE 3 OF ____

DETAIL Well Water x-ing COMPUTED KVH DATE 5/95

CHECKED BY ____ DATE ____

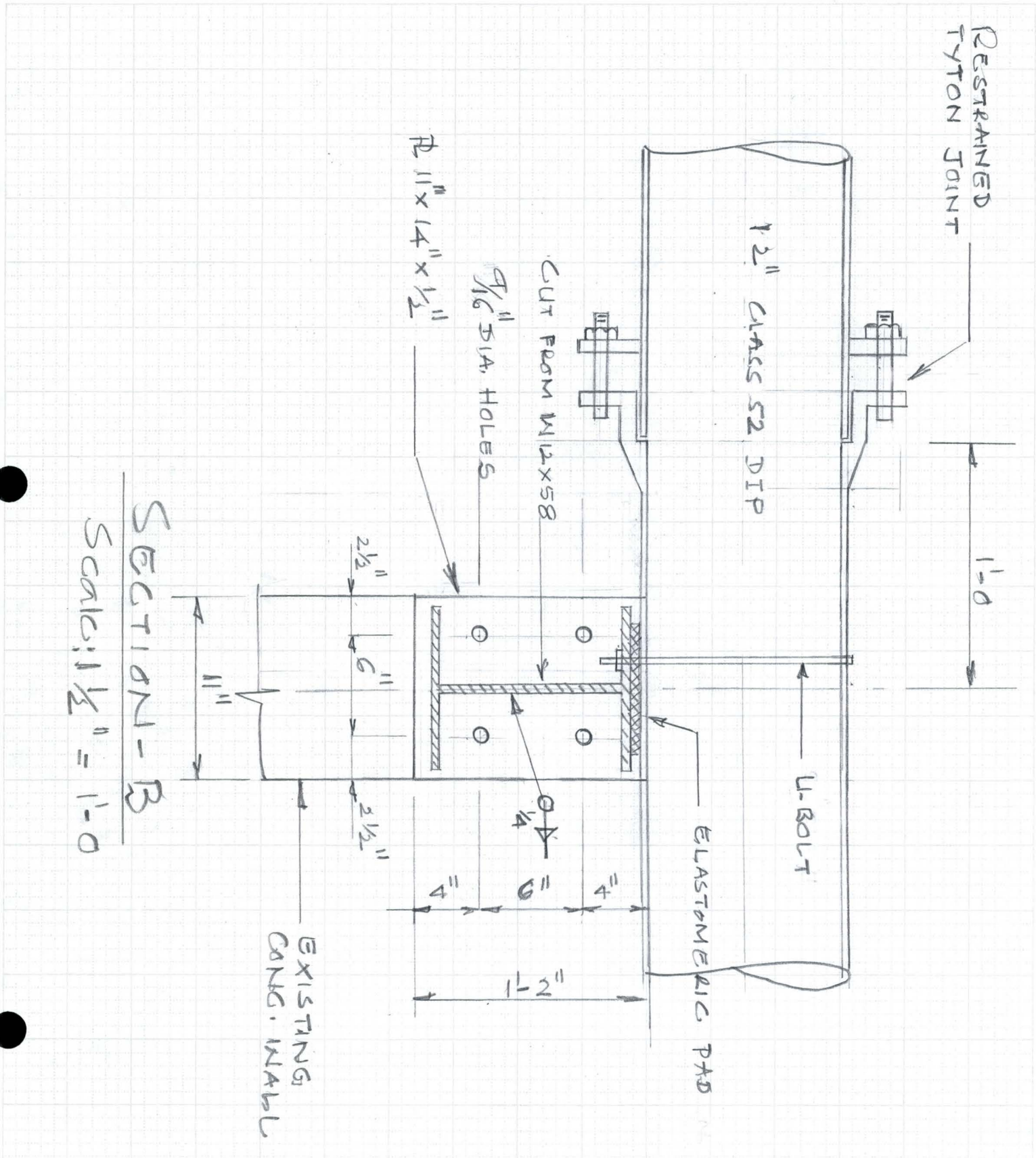

SECTION - B

Scale: 1½" = 1'-0

FLOOD CONTROL DISTRICT OF MARICOPA COUNTY

PROJECT Dysart Drain PAGE 4 OF ____

DETAIL Well water Xing COMPUTED KVH DATE 5/93

CHECKED BY ____ DATE ____

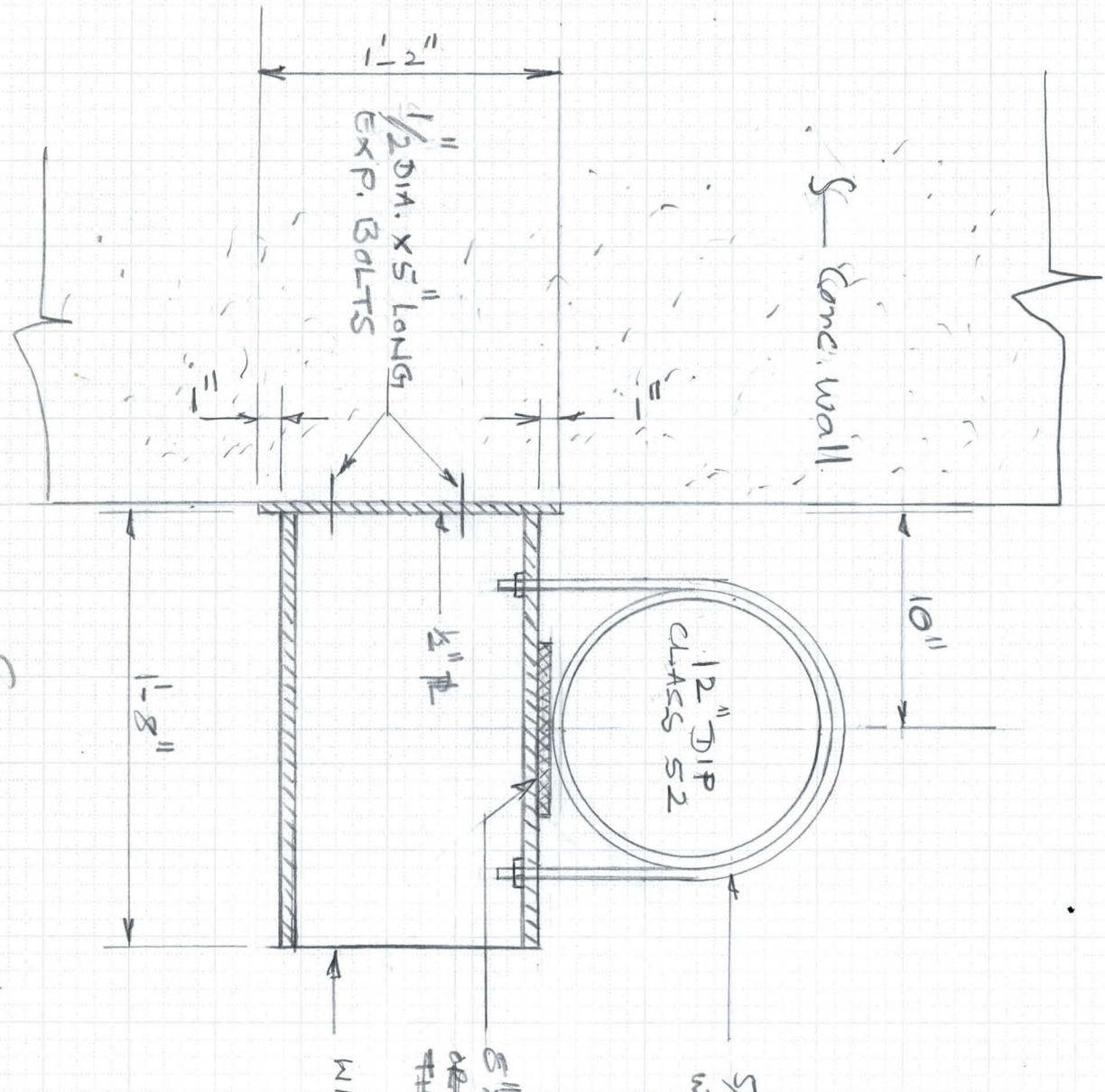

SECTION-C
Scale: 1 1/2" = 1'-0

12" Pipe (S.P) $t = 0.49"$ Wt. $= 62.6$ lbs/ft

Wt. of water: $\left(\frac{3.14 \times 1^2}{4}\right) 62.4 = 49$ lbs/ft

Total W.L. $= (62.6 + 49) = 112$ lbs/ft

a)

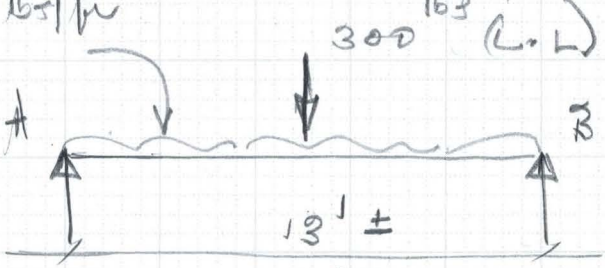

$R_A = R_B$

$(112 \times \frac{13}{2}) + 150 = 878$ lbs

$M_S = (878 \times 6.5) - (112 \times 6.5 \times \frac{6.5}{2}) = 3341$ lbs/ft

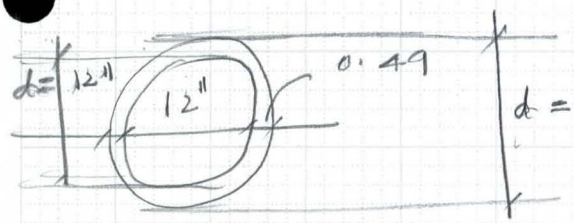

$S = 0.0982 \frac{d^4 - d_1^4}{d}$

$\frac{(12.98)^4 - (12)^4}{12.98} = 589.1 in^4$

$S = (0.0982) 589 = 57.8 in^4$

$M = fS, \quad 3341 \times 12 = f \times 57.8$

$f = 694$ psi

b) $R_A = R_B$

$= (112 \times \frac{13}{2}) + 300 = 1028$ lbs

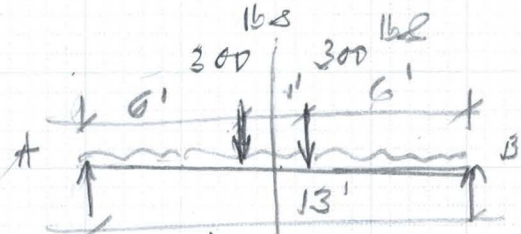

$M_S = (1028 \times 6.5) - 112 \times \frac{6.5^2}{2} - (300 \times 0.5) = 4166$ lbs/ft

$f = \frac{4166 \times 12}{57.8} = 865$ psi

FLOOD CONTROL DISTRICT OF MARICOPA COUNTY

PROJECT Dysart Drain PAGE 7 OF ____

DETAIL Wall Water X-ing COMPUTED KVH DATE 5/95

CHECKED BY ____ DATE ____

Loading @ Mid Support:

DL (Trib) = 63 lb/ft

Water Wt = $\frac{49}{11.2}$ lb/ft

LL = $\frac{100}{212}$ psf

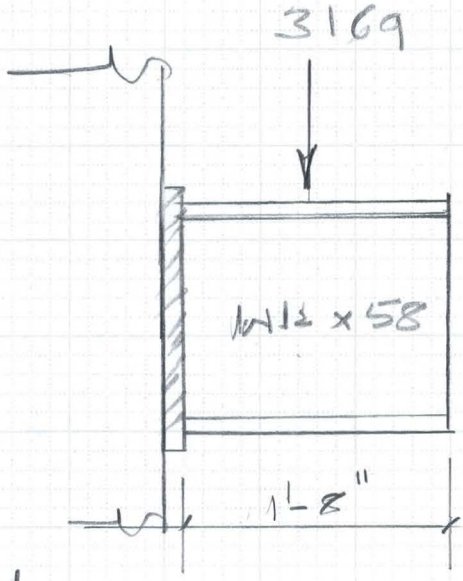

Load on Center Support

= (212 x 13) 1.15 ← Mom. Influence

= 3169 lb

Say 3.2 K

Check W12x58

M = $3.2 \times \frac{1.67}{2}$ = 2.67 K/ft

M = fS, for W12x58, S = 78

f = $\frac{2.67 \times 12}{78}$ = 0.41 Ksi Negligible

c) Check with LL = 100 lbf

$$M_S = \left(\frac{3.12 \times 13^2}{8}\right) = 4479 \text{ lb-ft}$$

DL = 112
LL = 100
212 plf

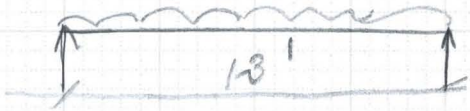

$$f = \left(\frac{4479 \times 12}{57.8}\right) = 930 \text{ psi}$$

FLOOD CONTROL DISTRICT OF MARICOPA COUNTY

PROJECT Dysart Drain PAGE 8 OF ____

DETAIL Well water X-ing COMPUTED KVH DATE 5/95

CHECKED BY ____ DATE ____

Check Weld Size & Length:

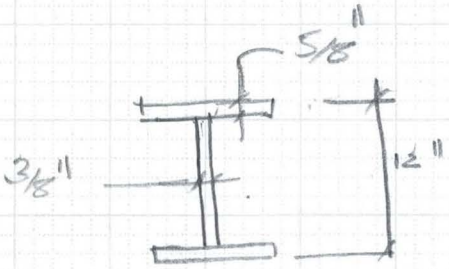

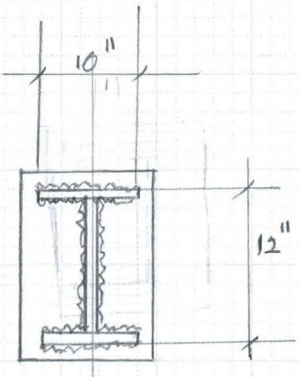

$(12 - 0.625 \times 2) = 10.75"$

$b_f = 10"$, $(10 - 0.375) = 9.625"$

$$I = \left[\frac{1 \times 10.75^3}{12}\right]2 + \left[(1 \times 10.75) 2 \times \left(\frac{10.75}{2}\right)^2\right] + \left[(10 \times 1) 2 \times 6^2\right]$$

$\frac{b d^3}{12}$ for flanges is ignored

$= (207 + 1242 + 1440) = 2889$

$S = I/y = \frac{2889}{(12/2)} = 482 \text{ in}^3$

Direct Sh. $f_y = \left(\frac{31.69}{10.75 \times 2}\right) = 0.15$ K/inch

Flexural $f_x = M/S = \frac{2.67 \times 12}{482} = 0.065$ K/inch

$f_r = \sqrt{0.15^2 + 0.065^2} = 0.16$ K/inch

Using $\frac{1}{4}"$ E70 fillet weld

Allow for E70 = $0.3 \times 70 = 21$ Ksi

$R_w = \frac{1}{4}(0.707)\,21 = 3.71$ K/in $>$ f_r (0.16 K/in)

∴ OK

FLOOD CONTROL DISTRICT OF MARICOPA COUNTY

PROJECT Dysart Drain PAGE 1 OF

DETAIL COMPUTED KVH DATE 5/95

CHECKED BY DATE

DMK 5/13

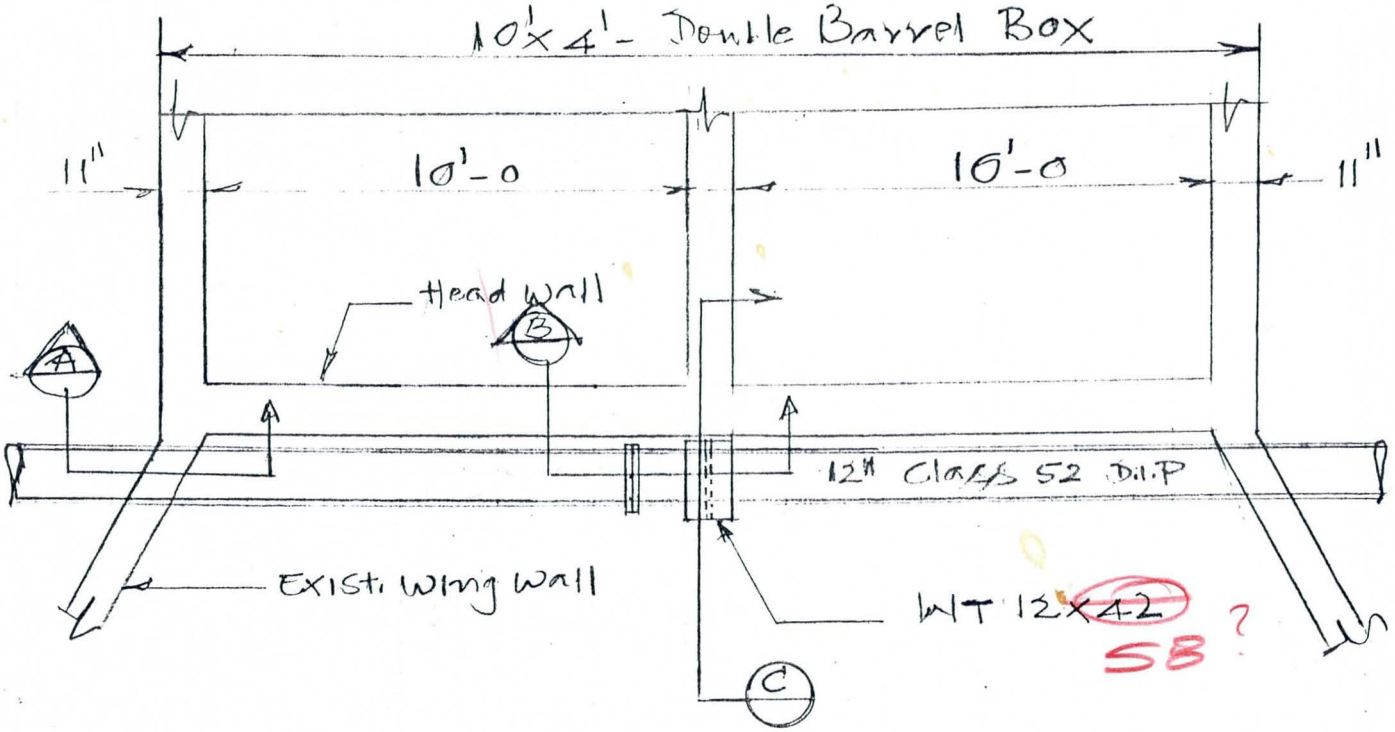

DETAIL - 1

Scale: 1/4" = 1'-0

NEED PLAN VIEW FOR ALIGNMENT VS EXISTING PIPE.

FLOOD CONTROL DISTRICT OF MARICOPA COUNTY

PROJECT Dysart Drain PAGE 2 OF ____

DETAIL Well water X-ing COMPUTED KVH DATE 5/95

CHECKED BY ____ DATE ____

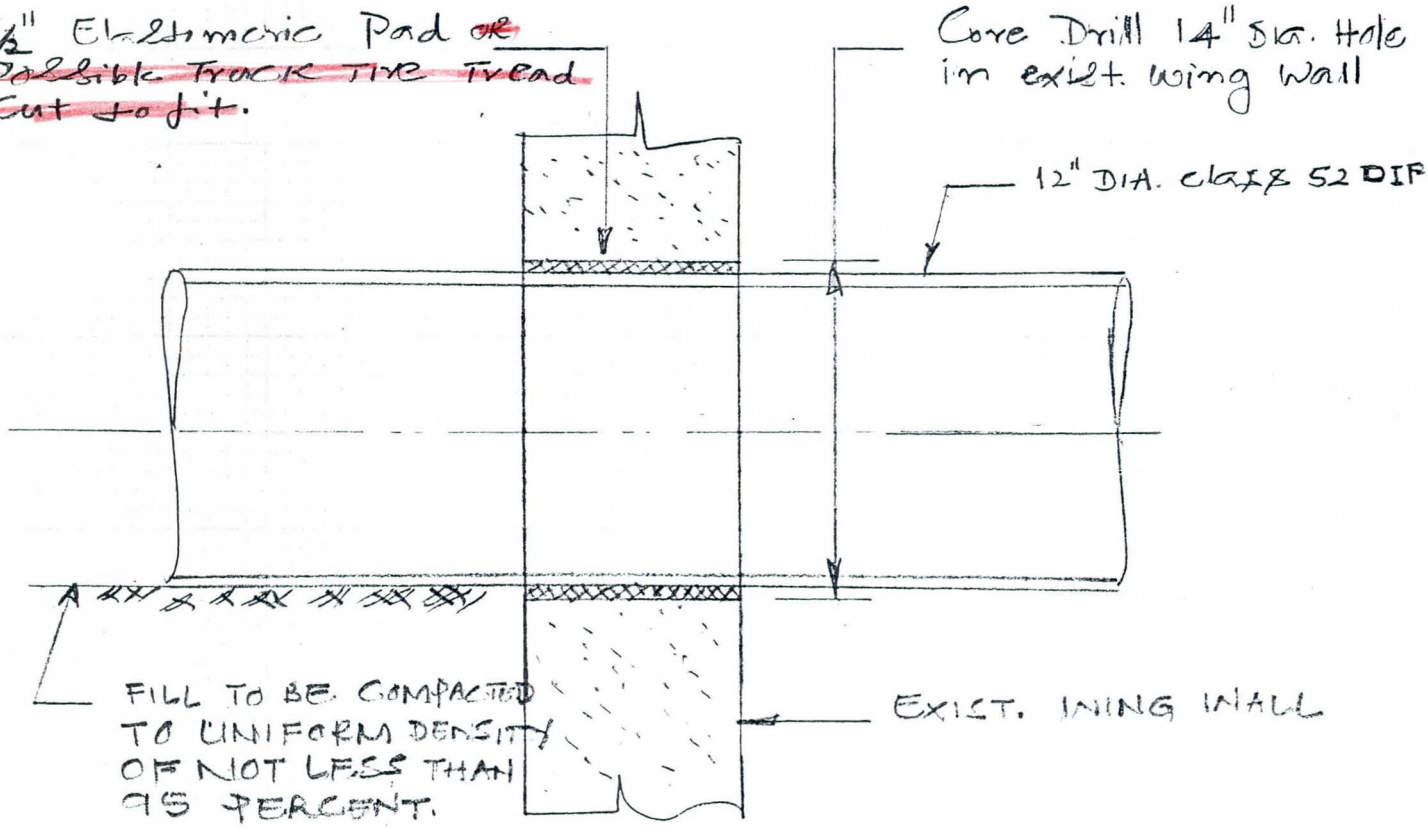

SECTION - A

Scale: 1½" = 1'-0

FLOOD CONTROL DISTRICT OF MARICOPA COUNTY

PROJECT Dysart Drain PAGE 3 OF 5/14

DETAIL Well Water X-ing COMPUTED KVH DATE 5/14

CHECKED BY _____ DATE _____

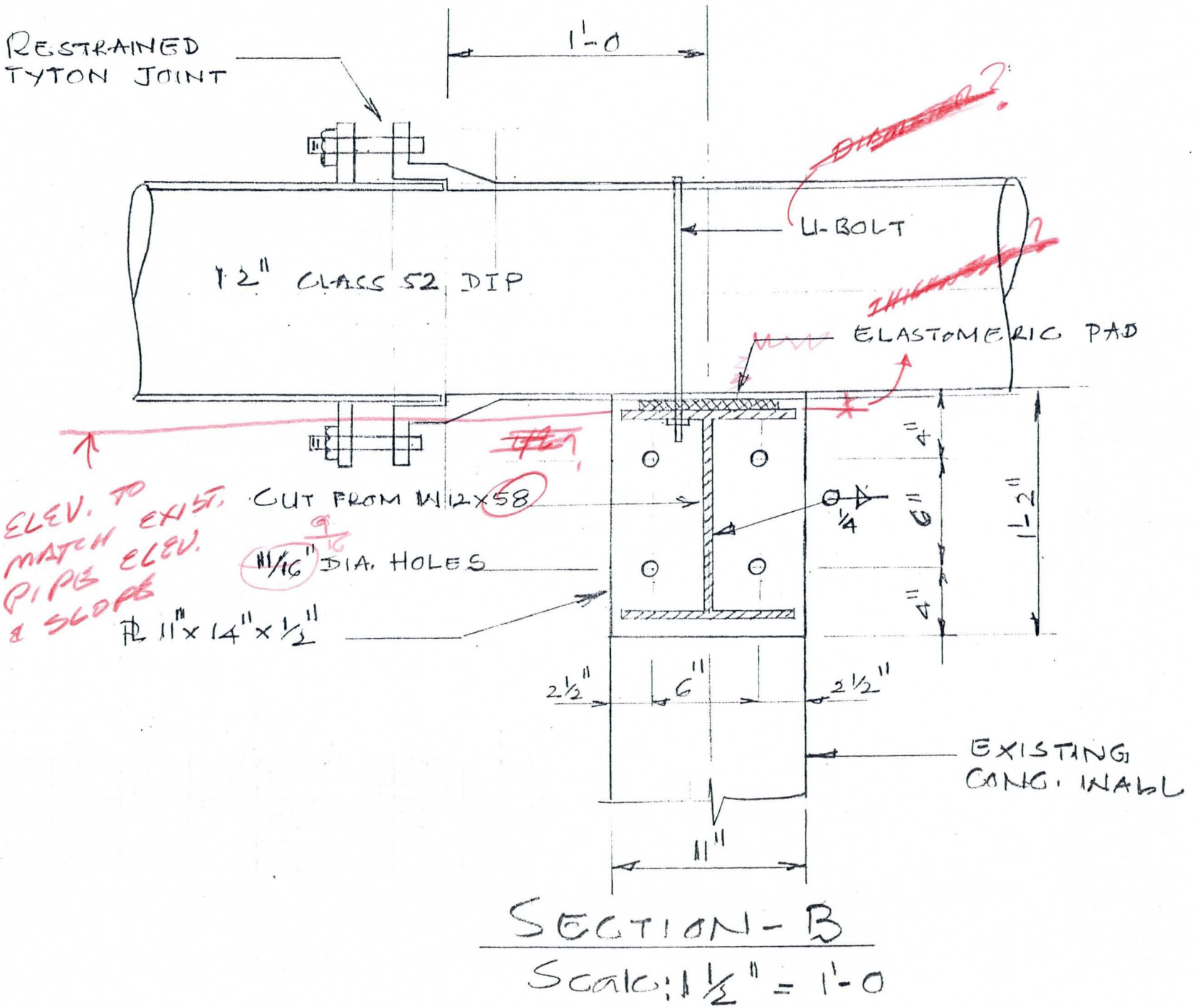

SECTION - B

Scale: 1 1/2" = 1'-0

FLOOD CONTROL DISTRICT OF MARICOPA COUNTY

PROJECT Dysart Drain PAGE 4 OF 5 9

DETAIL Well Water Xing COMPUTED KVH DATE 5

CHECKED BY _____ DATE _____

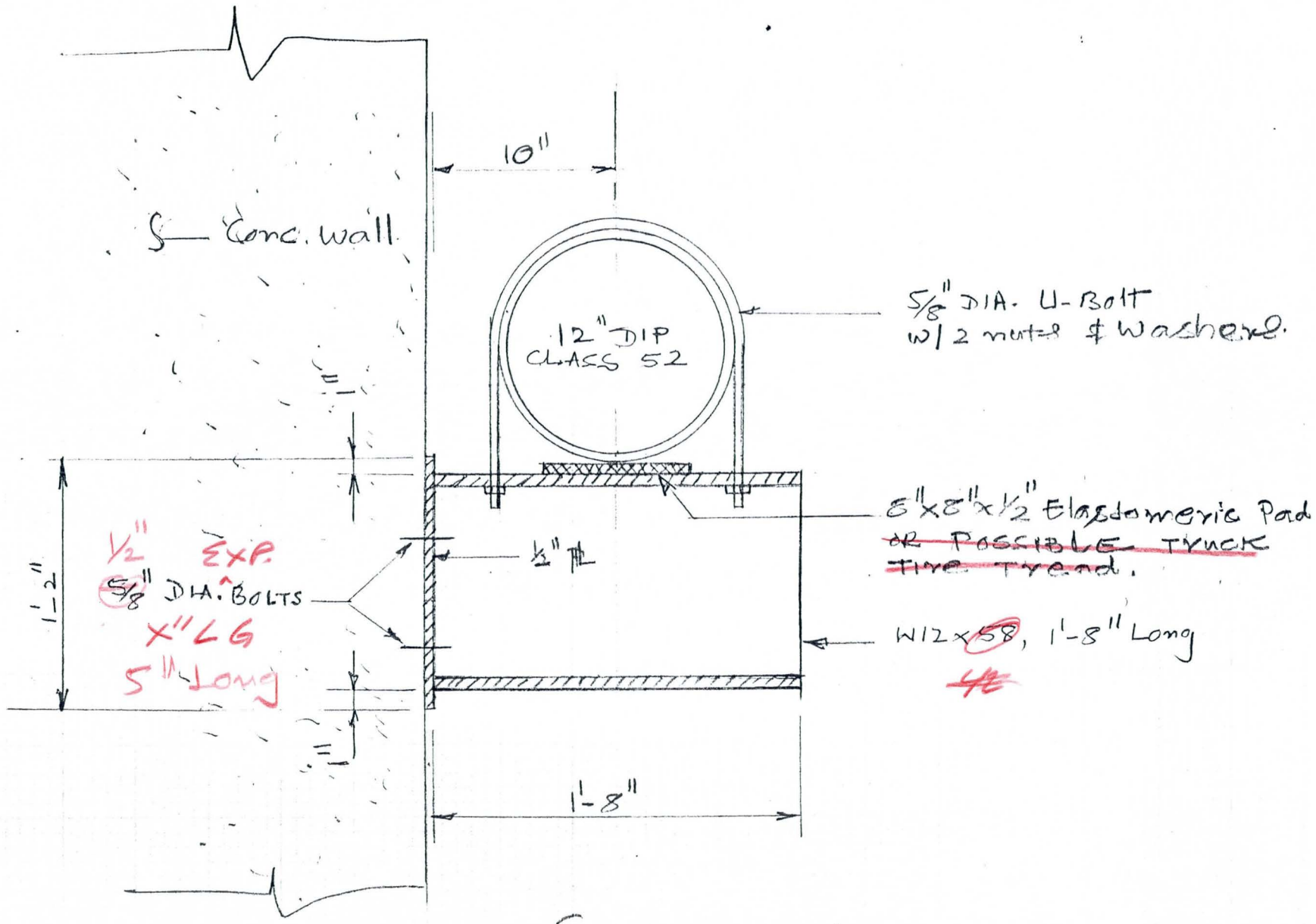

SECTION-C

Scale: 1½" = 1'-0

1/2" DIA x 5" LONG EXP. BOLTS

FLOOD CONTROL DISTRICT OF MARICOPA COUNTY

PROJECT Dysart Drain PAGE 1 OF ____

DETAIL ____ COMPUTED KVH DATE 5/95

____ CHECKED BY ____ DATE ____

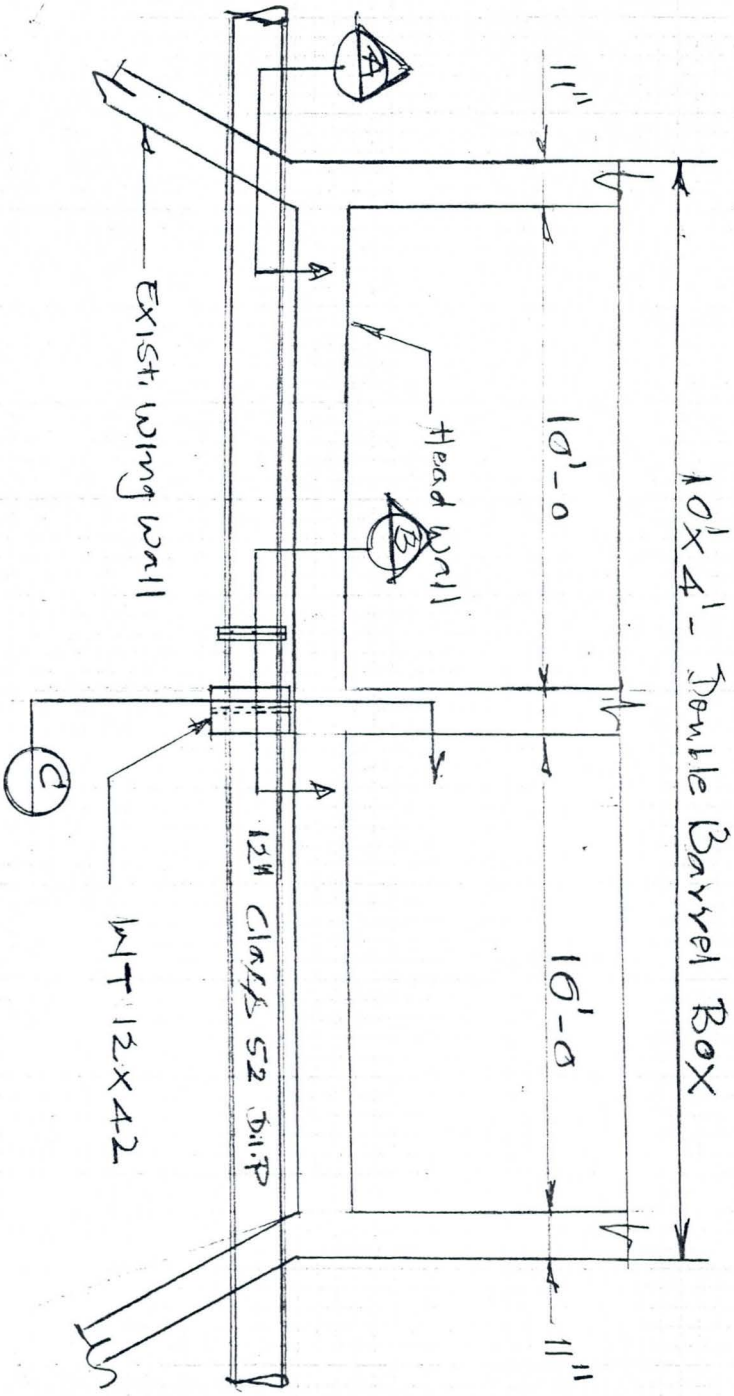

DETAIL - 1

Scale: 1/4" = 1'-0

FLOOD CONTROL DISTRICT OF MARICOPA COUNTY

PROJECT Dysart Drain PAGE 2 OF ____

DETAIL Well water X-ing COMPUTED KVH DATE 5/95

CHECKED BY ____ DATE ____

possible truck tire tread cut to fit.

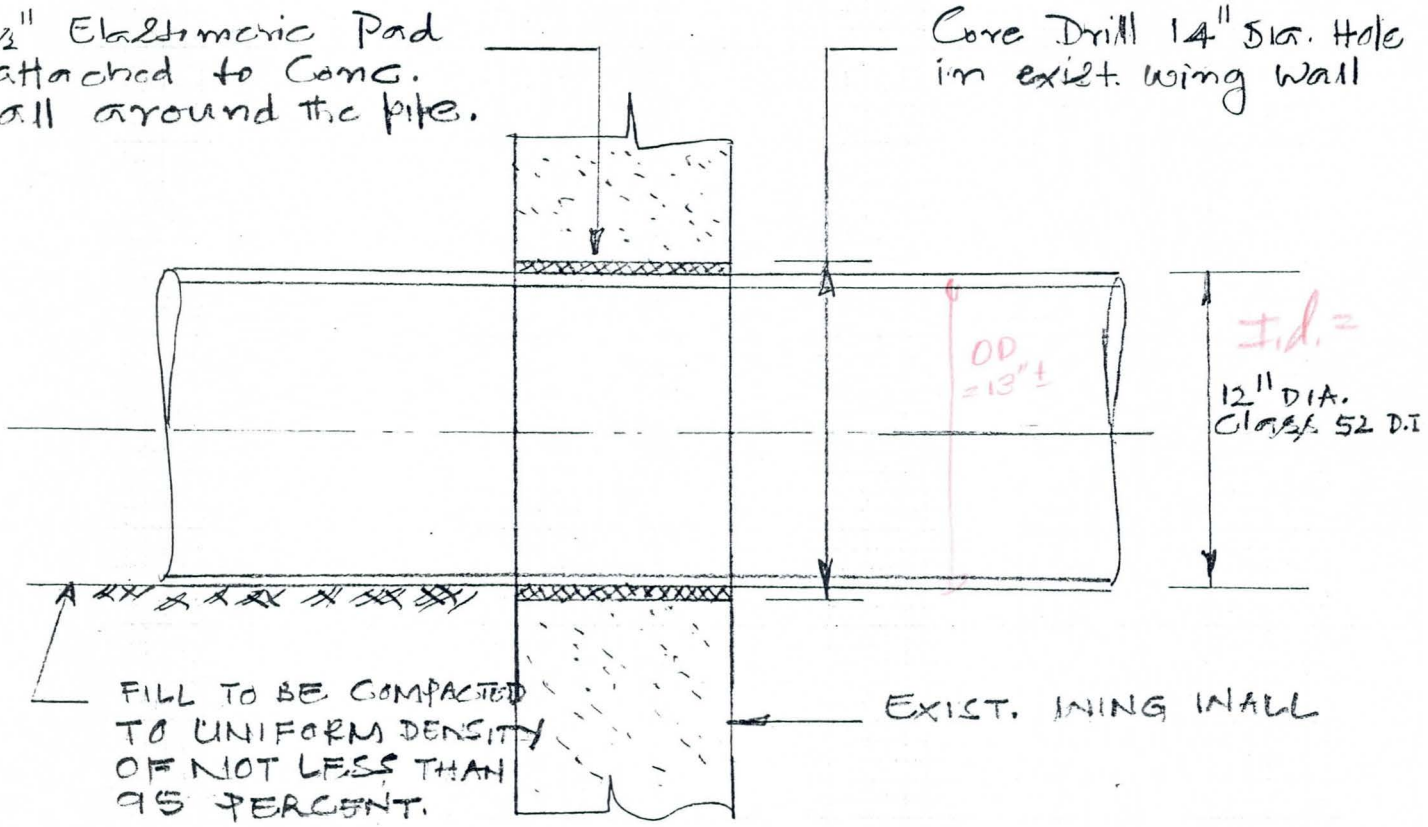

SECTION - A

Scale : 1½" = 1'-0

FLOOD CONTROL DISTRICT OF MARICOPA COUNTY

PROJECT Dysart Drain PAGE 3 OF 5/95

DETAIL Wall Width X-ing COMPUTED KVH DATE

CHECKED BY DATE

How will the induced moment affect the joint?

12" DIP

Elastomeric Pad

1/4"

CUT FROM ~~WT 12 X 42~~ W12x58

11/16" DIA. HOLES

PL 11" x 14" x 1/2"

2 1/2" 6" 2 1/2"

4 1/2" 6" 3 1/2" 14"

EXIST. CONCRETE WALL

11"

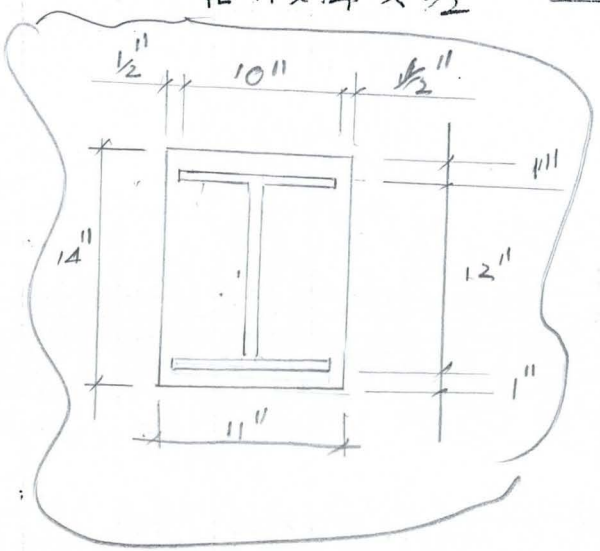

SECTION - B

Scale: 1 1/2" = 1'-0

FLOOD CONTROL DISTRICT OF MARICOPA COUNTY

FLOOD CONTROL DISTRICT OF MARICOPA COUNTY

PROJECT Dysart Drain PAGE 4 OF ____

DETAIL well water Xing COMPUTED KVH DATE 5/95

CHECKED BY ____ DATE ____

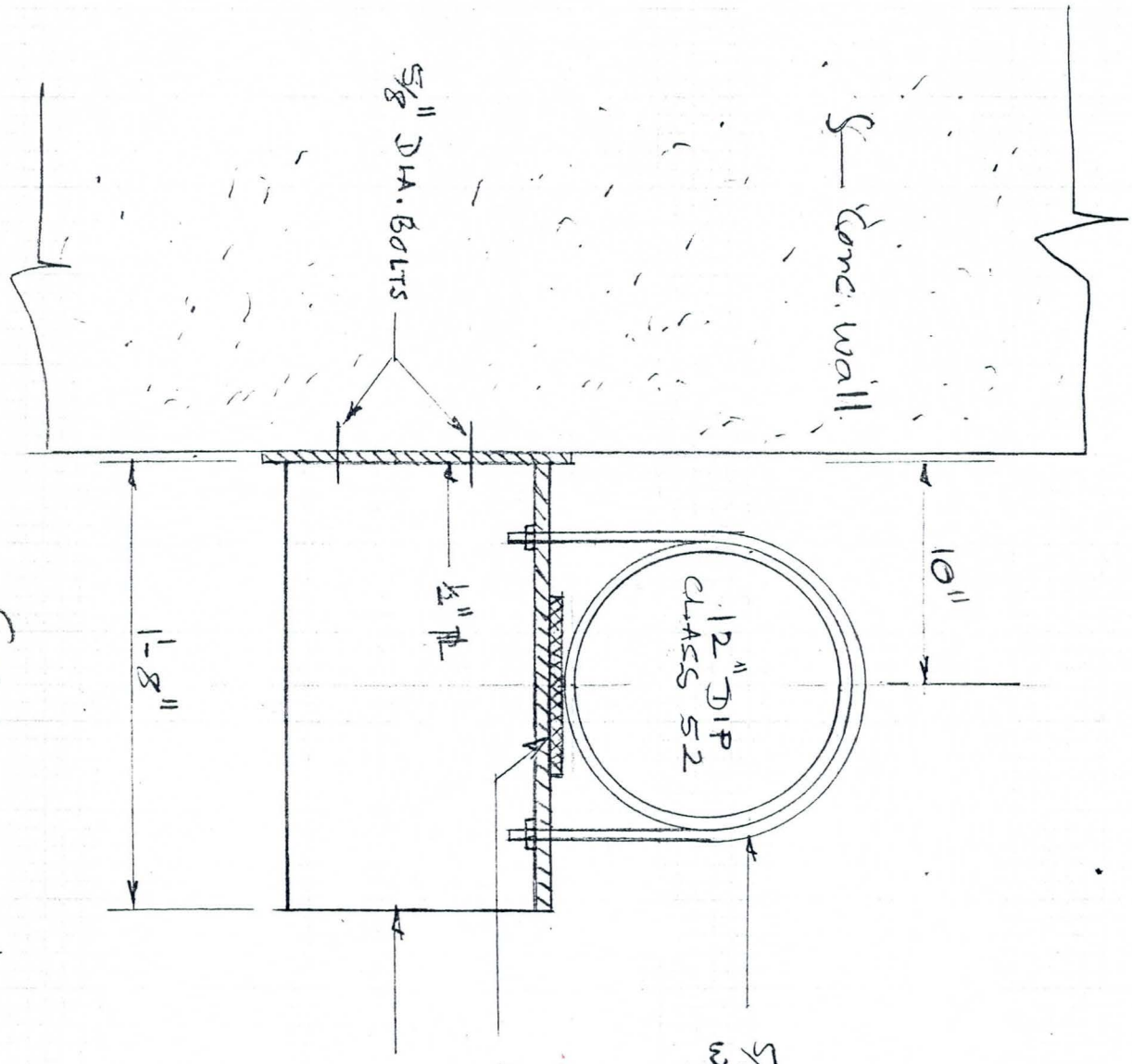

SECTION-C
Scale: 1 1/2" = 1'-0

FLOOD CONTROL DISTRICT OF MARICOPA COUNTY

PROJECT Dysart Drain PAGE 5 OF 5

DETAIL Well Water X-ing COMPUTED KVH DATE

CHECKED BY DATE

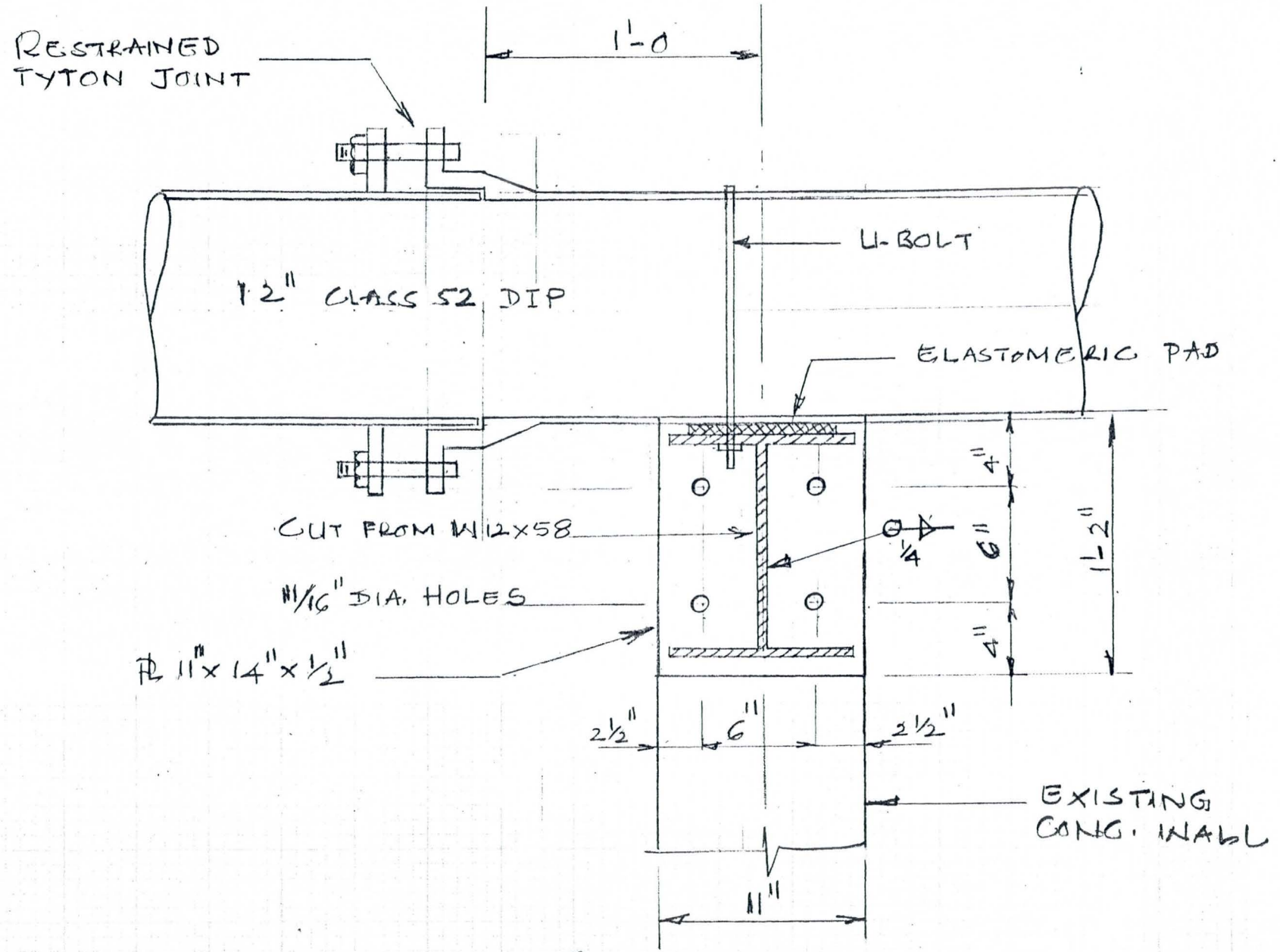

SECTION - B

Scale: 1 1/2" = 1'-0

FLOOD CONTROL DISTRICT OF MARICOPA COUNTY

PROJECT _____ PAGE ____ OF ____

DETAIL _____ COMPUTED OK/CGW DATE ____

$\frac{(\pi)(d)(t)}{144} = .13 \times 490 = 62^{lb}$ CHECKED BY _____ DATE ____

12" Pipe (S.P) $t = 0.49''$ wt $= 62.6$ lbs/ft

wt. of water: $\left(\frac{3.14 \times 1^2}{4}\right) 62.4 = 49$ lbs/ft

Total USL $= (62.6 + 49) = 112$ lbs/ft

a)

$V_L = 112$ lbs/ft

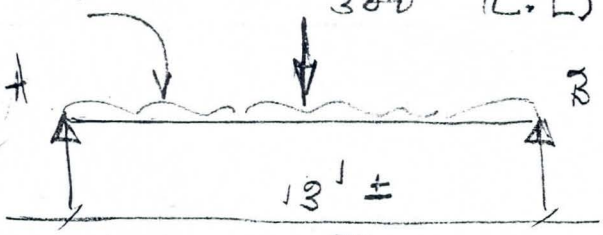

$R_A = R_B$

$\left(112 \times \frac{13}{2}\right) + 150 = 878$ lbs

$M_s = (878 \times 6.5) - \left(112 \times 6.5 \times \frac{6.5}{2}\right) = 3341$ lbs/ft

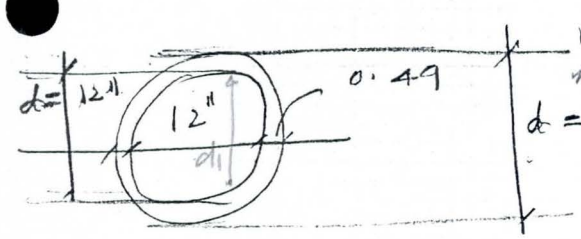

p/u 975
pl/8 2364
3341

$d = 12.98''$

$S = 0.0982 \frac{d^4 - d_1^4}{d}$

$\frac{(12.98)^4 - (12)^4}{12.98} = 589 \text{ in}^4$

$S = \cancel{\frac{\pi(d^4 - d_1^4)}{32d}} =$

$S = (0.0982)\,589 = 57.8 \text{ in}^4$

$M = fS$, $3341 \times 12 = f \times 57.8$

$f = \frac{M}{S} = \frac{(3341^{1\text{-}lb})(12^{in}/ft)}{60 \text{ in}^3}$

$f = 694$ psi

b) $R_A = R_B$ $f = 670$ lb/in²

$= \left(112 \times \frac{13}{2}\right) + 300 = 1028$ lbs

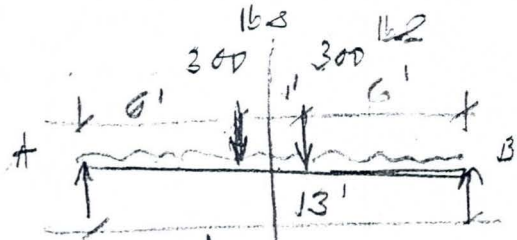

$M_s = (1028 \times 6.5) - 112 \times \frac{6.5^2}{2}$

$- (300 \times 0.5) = 4166$ lbs/ft

$f = \frac{4166 \times 12}{57.8} = 865$ psi

FLOOD CONTROL DISTRICT OF MARICOPA COUNTY

PROJECT _____ PAGE ____ OF ____

DETAIL _____ COMPUTED _____ DATE ____

_____ CHECKED BY _____ DATE ____

c) Check unit LL = 104 plf

$M_S = \frac{(212 \times 13^2)}{8} = 4479$ lb-ft

DL = 112
LL = 104
212 plf

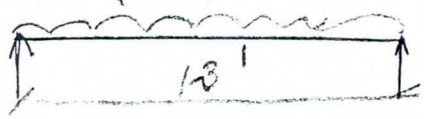

$f = \frac{(4479 \times 12)}{5.8} = 930$ psi

$M = \frac{(212 \times 13^2)}{8} = 4479$

FLOOD CONTROL DISTRICT OF MARICOPA COUNTY

PROJECT _____ PAGE ____ OF ____

DETAIL _____ COMPUTED _____ DATE _____

_____ CHECKED BY _____ DATE _____

Coal Tar Epoxy (Exterior) —

Mike Macallaster: 1-801-373-6910

12" Water Line — Irrigation water line

12" DIP Coming in a Trench & now hits a Concrete Box Culvert & now has to Span between two Concrete walls Say 12' Span

1) up in the Air
2) What max Span? with a 12" Typ DIP
3) Can we Span this with a DIP or ~~St~~ Steel pipe
5) What is the Allow. Bending Stress A.36 — Allow St is 22 to 24 KSI
6) Any Catalogues with Sect. properties, Inertia, Stiffness
7) ~~Any C~~ Exposed Any Coating (what type) to prevent Rusting

6910-153 4-90

To: KVH

From: Kumar Hanumaiah:TALOS
Postmark: 05/08/95 02:33PM
Status: Previously read

Host: TALOS
Delivered: 05/08/95 02:39PM

Subject: NOTES

Message:

1. STRUCTURAL STEEL SHALL CONFORM TO ASTM SPEC.A36

2. ALL WELDING SHALL CONFORM TO THE REQUIREMENTS OF AMERICAN WELDING SOCIETY.USE E70 ELECTRODES WITH A MINIMUM TENSILE STRENGTH OF 70 KSI

3. PAINT AND PAINTING OF EXPOSED SURFACES FOR DIP SHALL CONFORM TO STANDARD SPECIFICATIONS.

FLOOD CONTROL DISTRICT OF MARICOPA COUNTY

PROJECT _____ PAGE ____ OF ____

DETAIL _____ COMPUTED _____ DATE ____

_____ CHECKED BY _____ DATE ____

DYSART DRAIN
COLLECTOR CHANNEL

FLOOD CONTROL DISTRICT OF MARICOPA COUNTY

PROJECT Dysart Drain PAGE ____ OF ____

DETAIL Collector chnl. COMPUTED KVH DATE 7/94

CHECKED BY ____ DATE ____

NOTE.1 : NORTH FARM ROAD.

Existing grade 1110.80

Proposed grade 1111.55

SOUTH FARM ROAD.

Existing grade 1104.60

Proposed grade 1105.35, ~~1105.60~~ 1105.52

NOTE.2 : NORTH FARM ROAD.

Inv. of Existing C.L.D and Inv. of Proposed Pipe (West) 1108.75 ±
(East) 1105.67

SOUTH FARM ROAD

Inv. of Existing C.L.D and Inv. of Proposed pipe (West) 1102.61 ±
(East) 1102.42

Elevations shown on the drawing are only approximate. Field Verifications is required and adjustments in elevations may be required at the time of Construction.

Note.3 : TAILWATER CROSSINGS

Inv. of Tailwater Ditch 1103.77 (West End
1103.67 (East End)

Inv. of 24" DIA Pipe 1103.02 (West End
& ~~1102.42~~ (East End

FLOOD CONTROL DISTRICT OF MARICOPA COUNTY

PROJECT Dykstra Drain PAGE ____ OF ____

DETAIL Collector Chl. COMPUTED KVH DATE 6/94

Souths Farm Rd CHECKED BY ____ DATE ____

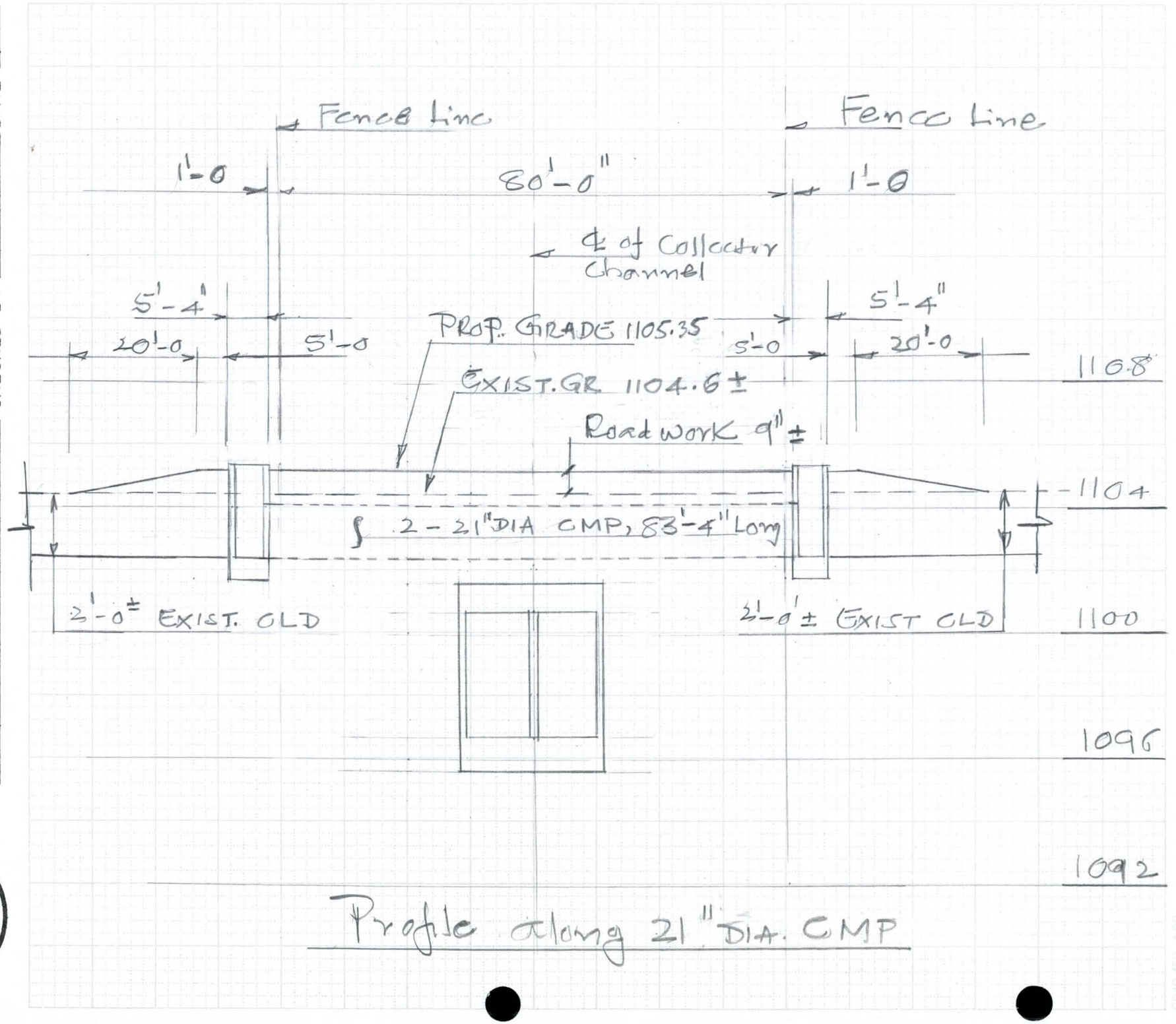

Profile along 21" DIA. CMP

FLOOD CONTROL DISTRICT OF MARICOPA COUNTY

PROJECT Dysart Drain PAGE ___ OF ___

DETAIL Collector Channel COMPUTED KVH DATE 2/94

Tailwater profile CHECKED BY ___ DATE ___

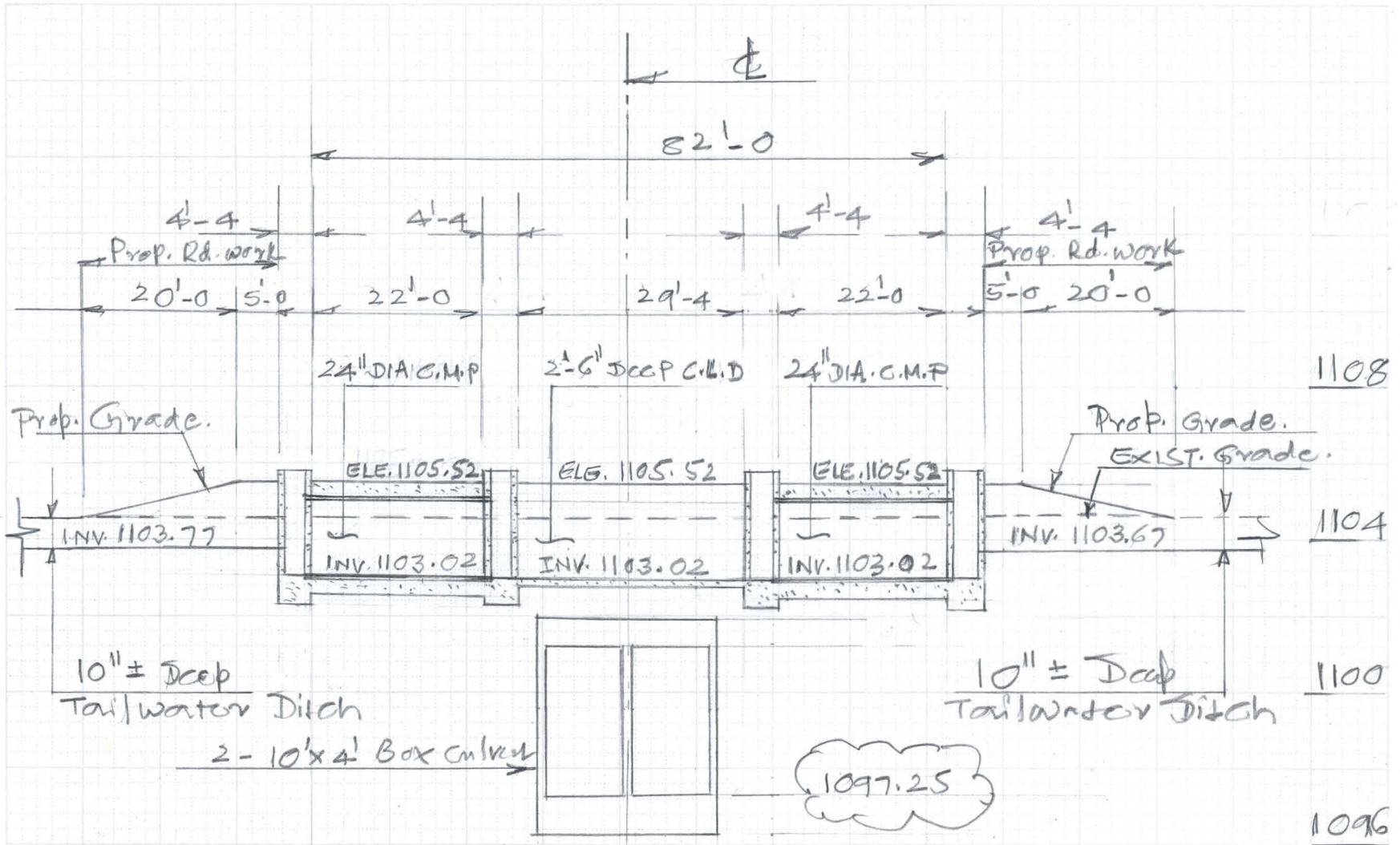

Profile Along Tailwater Ditch

Scale 1" = 20'-0

6910-153-440

FLOOD CONTROL DISTRICT OF MARICOPA COUNTY

PROJECT Pasqua Drain PAGE ____ OF ____

DETAIL Collector Channel COMPUTED KVH DATE 4/94

CHECKED BY ____ DATE ____

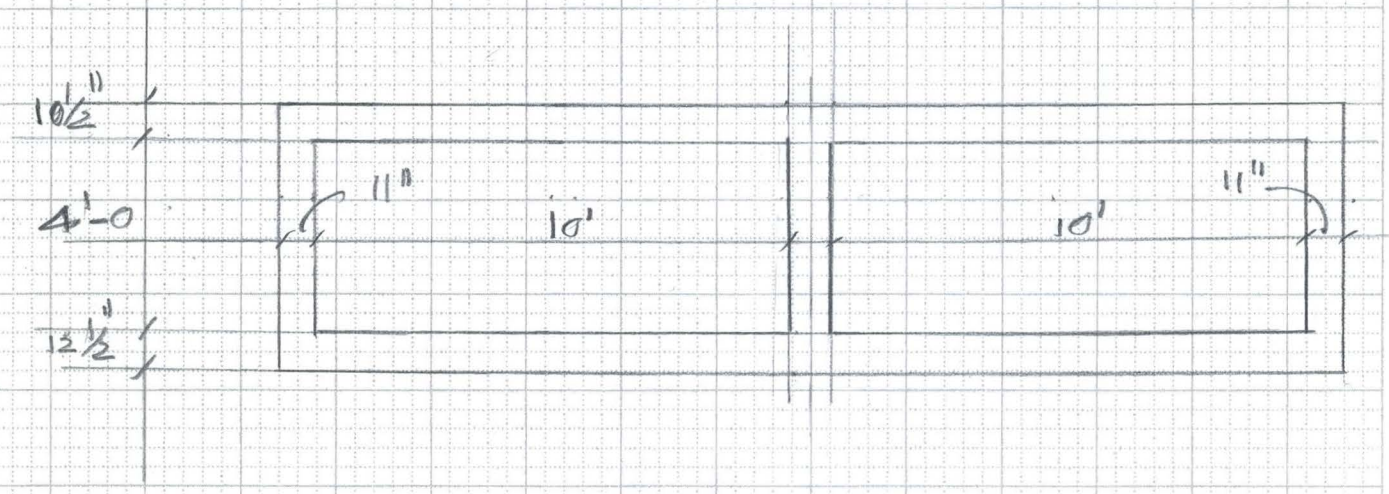

$10\frac{1}{2}" = \begin{array}{r} 4.00 \\ 0.88 \\ \hline 4.88 \end{array}$

INV = 1102.12
4.88
1107.00 Top of Culvert

Inv. of CLD C (Exist) = 1105.57
1107.00 – Top of Culv
1.57

Clearance Bars

Top of Culvert & Existing CLD

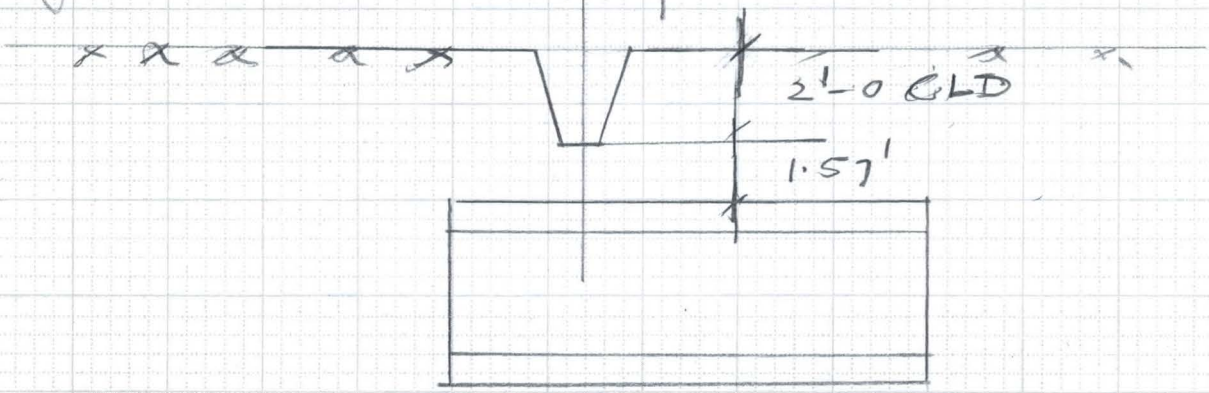

FLOOD CONTROL DISTRICT OF MARICOPA COUNTY

PROJECT Dysart Drain PAGE ____ OF ____

DETAIL Collector Channel COMPUTED KVH DATE 7/94

CHECKED BY ____ DATE ____

North Farm Rd:

a) Inv. of CLD (West Side) = (1109.10 + 1108.40)/2

= 1108.75

b) Inv. of CLD (East Side) = (1108.76 + 1108.57)/2 =

= 1108.67

South Farm Rd:

a) Inv. of CLD (West Side) = 1102.61

b) Inv. of CLD (East Side) = 1102.42

Tailwater Ditch

West Side:

INV.: 1103.77
Nat. GR: 1104.70

0.92' = 11"

1103.80

1103.55

East Side

INV: 1103.93
Nat. GR: 1104.72

Set Inv @ 1103.77 on West
& @ 1108.67 on East

1103.77
0.83
1104.60

1103.67
0.83
50

11

1103.77
− 0.75
1103.02

1103.77

$ 181 × 2 =

1104.60
0.75
535

18/4 = 3000

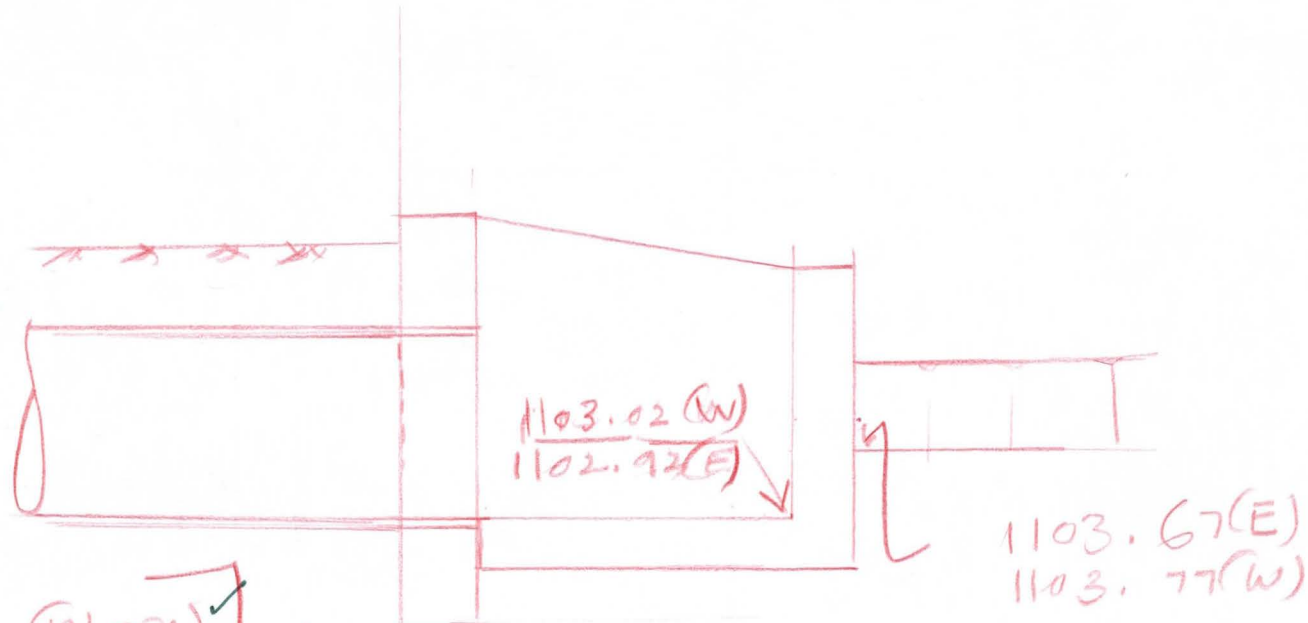

INV. of CLD. 1103.77 (West) ✓
— " — 1103.67 (East) ✓ Note. 2

Exist. Gr. 1104.60 ~~(East)~~
prop Grade — " — ~~1104.50 (East)~~ ~~1106.02~~ 1105.52 (W) ~~1105.42 (E)~~

1103.02
3.00
1106.02
1104.60
1.42

~~1103.67~~
0.75
1102.92

INV. of pipe. 1103.02 (West) ✓
— " — 1102.92 (East) ✓ Note. 1

FLOOD CONTROL DISTRICT OF MARICOPA COUNTY

PROJECT Dysart Drain PAGE ____ OF ____

DETAIL Collector Channel COMPUTED KVH DATE 2/94

CHECKED BY ____ DATE ____

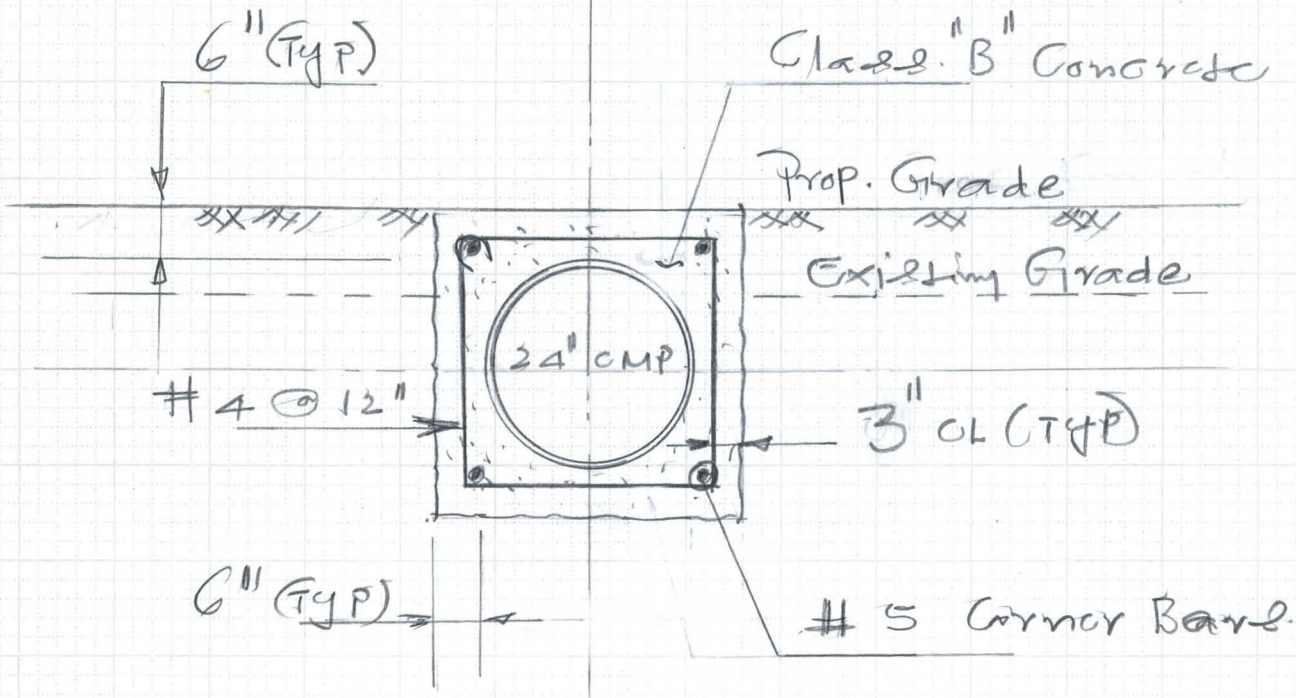

Section 8-8

1/2" = 1'-0

FLOOD CONTROL DISTRICT OF MARICOPA COUNTY

PROJECT Dysart Drain PAGE ____ OF ____

DETAIL Collector Channel COMPUTED JKVH DATE 6/30/9

CHECKED BY ____ DATE ____

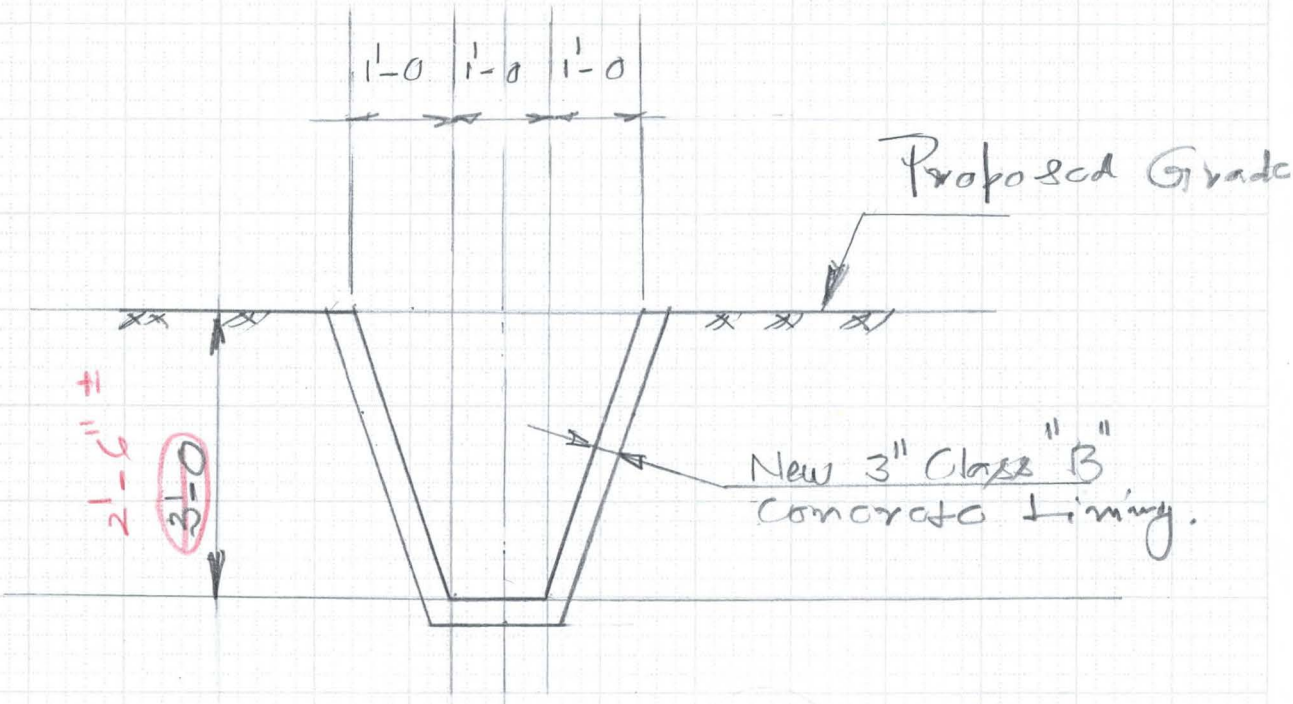

SECTION 1

1/2" = 1'-0

FLOOD CONTROL DISTRICT OF MARICOPA COUNTY

PROJECT Dysart Drain PAGE ____ OF ____

DETAIL Collector Channel COMPUTED KVH DATE 7/94

CHECKED BY ____ DATE ____

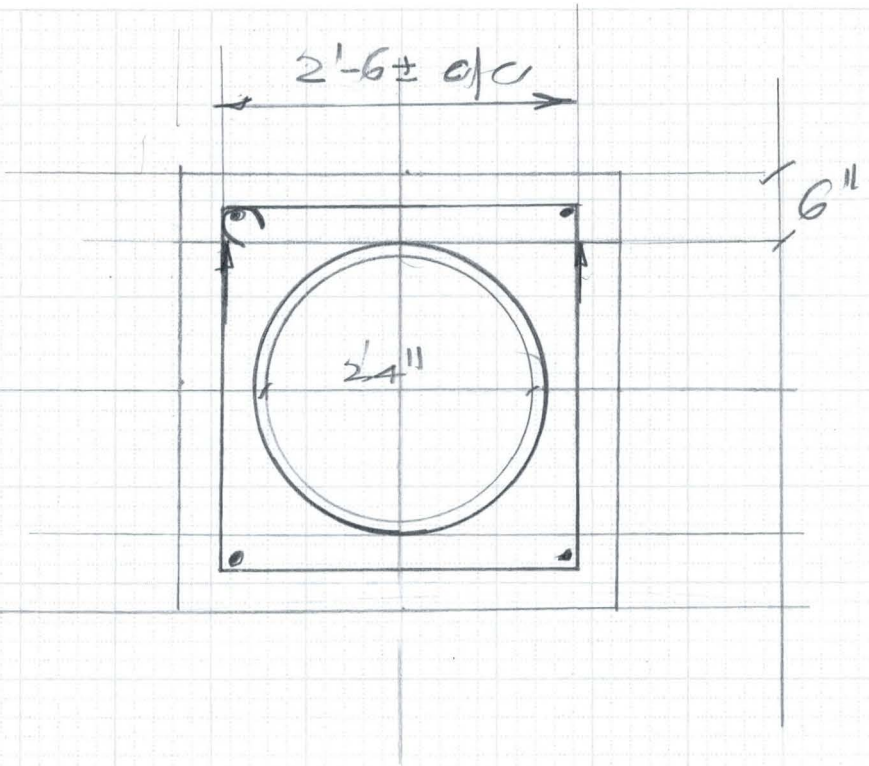

Check Reinf:

Span = 2.5'

Wheel Load = (16^k) ← Distn width = 5 to 7'

Use a Distn width of 6'-0

Wheel load / ft = (16.0/6) = 2.67^k ←

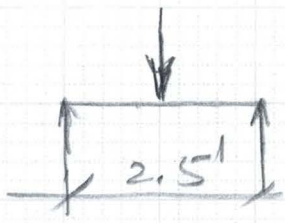

$M_S = \frac{PL}{4} = \frac{2.67 \times 2.5}{4}$

$= 1.67$ ft-k

$d = (6 - 3 - 0.25) = 2.75"$

$A_S = \frac{1.67 \times 12}{24 \times 0.88 \times 2.75}$

$= 0.345 \text{ sq}"$

#5 @ 12"

FLOOD CONTROL DISTRICT OF MARICOPA COUNTY

PROJECT Dysart Drain PAGE ___ OF ___

DETAIL South Farm Rd. COMPUTED KVH DATE 6/24/9

CHECKED BY ___ DATE ___

1096.68
0.29
1096.97 @ Inv ℄ of Farm Rd.

0.0095 × 31 = 0.295

1096.68
0.12
1096.80 @ Inv ℄ of CLD

0.0095 × 13 = 0.12

1096.68
0.58
1097.26 @ Inv ℄ of Tailw. Ditch

0.0095 × 61 = 0.58

Box × Ht = 4.0
Top Slab = 0.88 10½"
4.88

1096.80
4.88
1101.68 — Top of Culvert @ ℄ of CLD

Exist. GR = 1104.70 ~~1104.5~~
Top of Culvert = 1101.68
~~2.82~~ 3.02

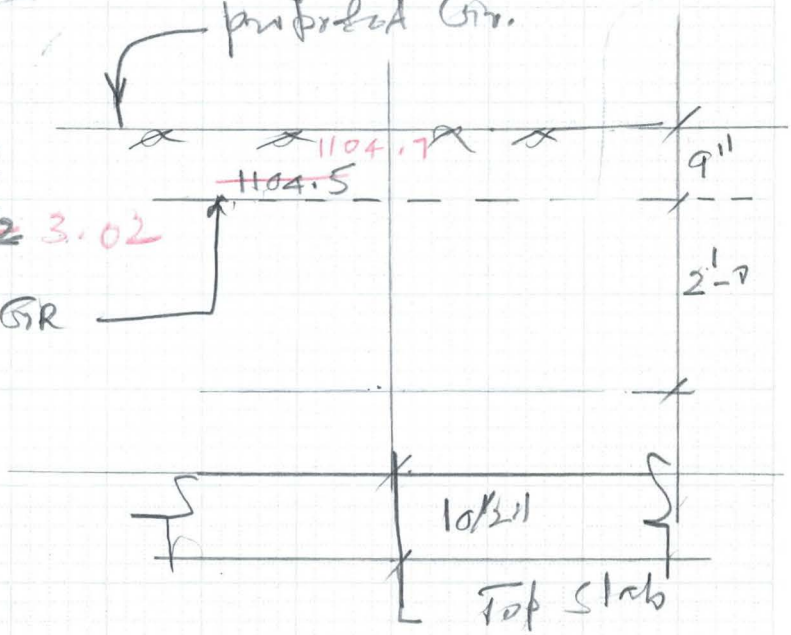

FLOOD CONTROL DISTRICT OF MARICOPA COUNTY

PROJECT Pysan Drain PAGE ____ OF ____

DETAIL Collector Channel COMPUTED KVH DATE 6/29/99

South Farm Rd CHECKED BY ____ DATE ____

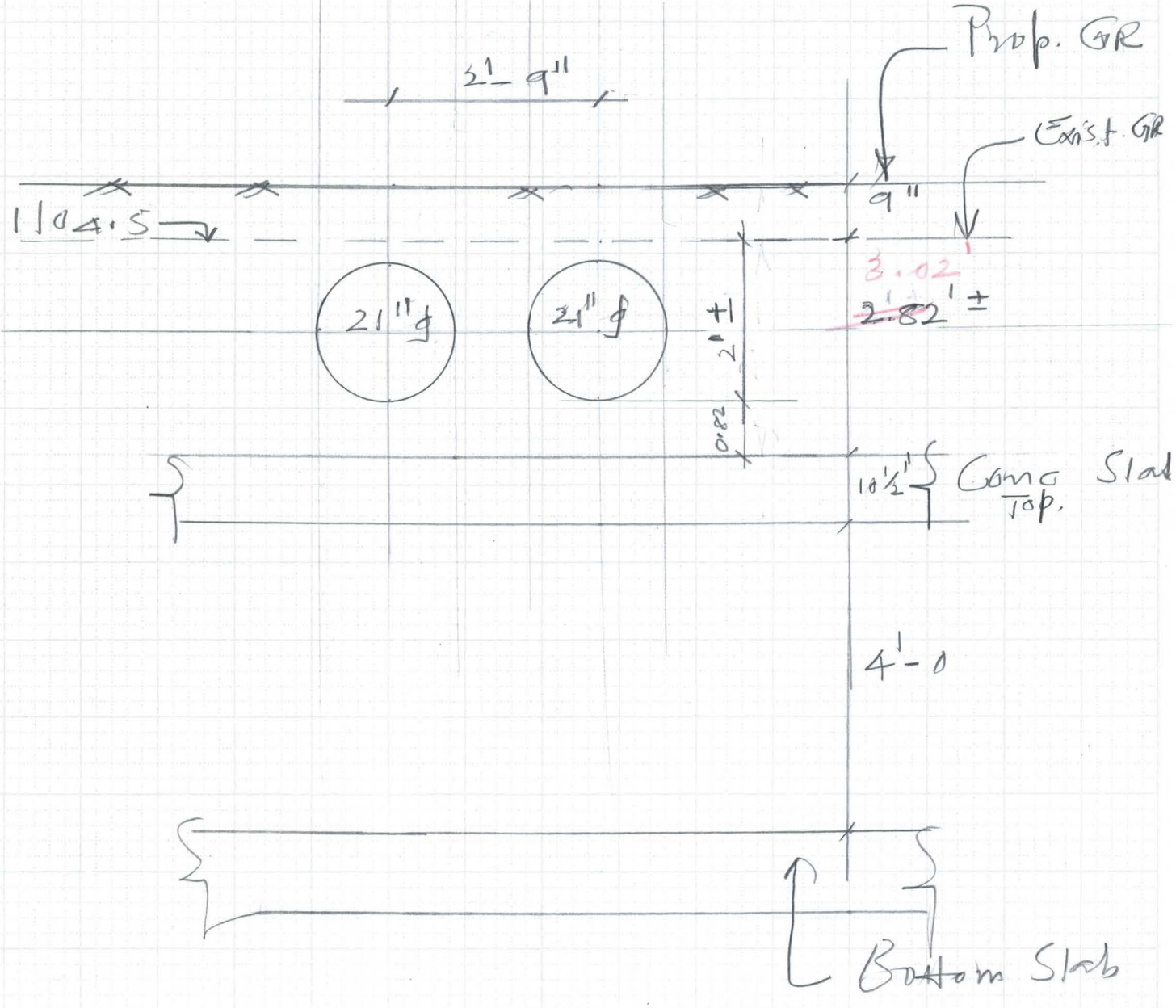

FLOOD CONTROL DISTRICT OF MARICOPA COUNTY

PROJECT Dysart Drain PAGE 1 OF

DETAIL Preliminary COMPUTED KVH DATE 3/94

CHECKED BY DATE

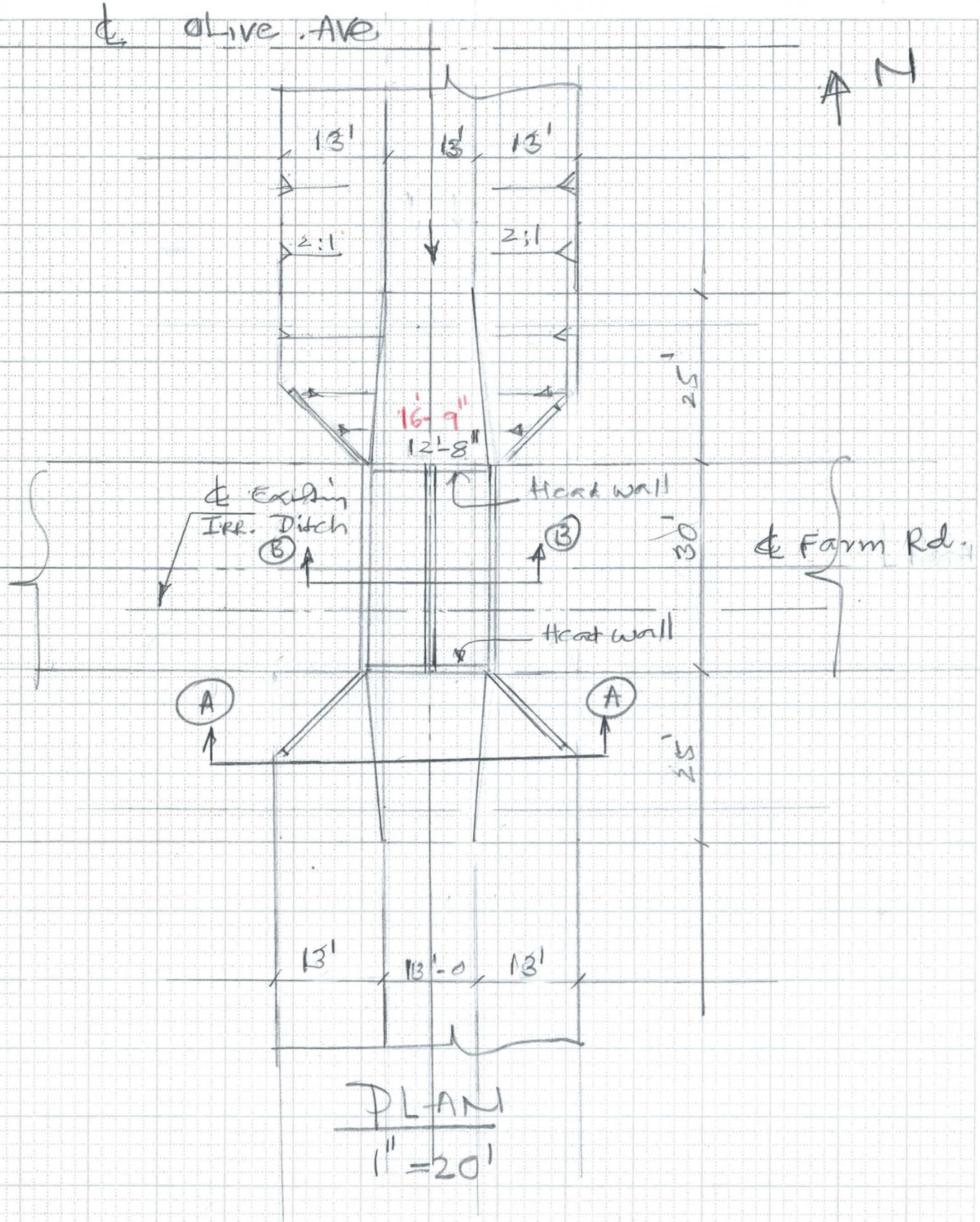

PLAN

1" = 20'

FLOOD CONTROL DISTRICT OF MARICOPA COUNTY

PROJECT Dysart Drain PAGE (2) OF ____

DETAIL ____ COMPUTED KVH DATE 3/94

____ CHECKED BY ____ DATE ____

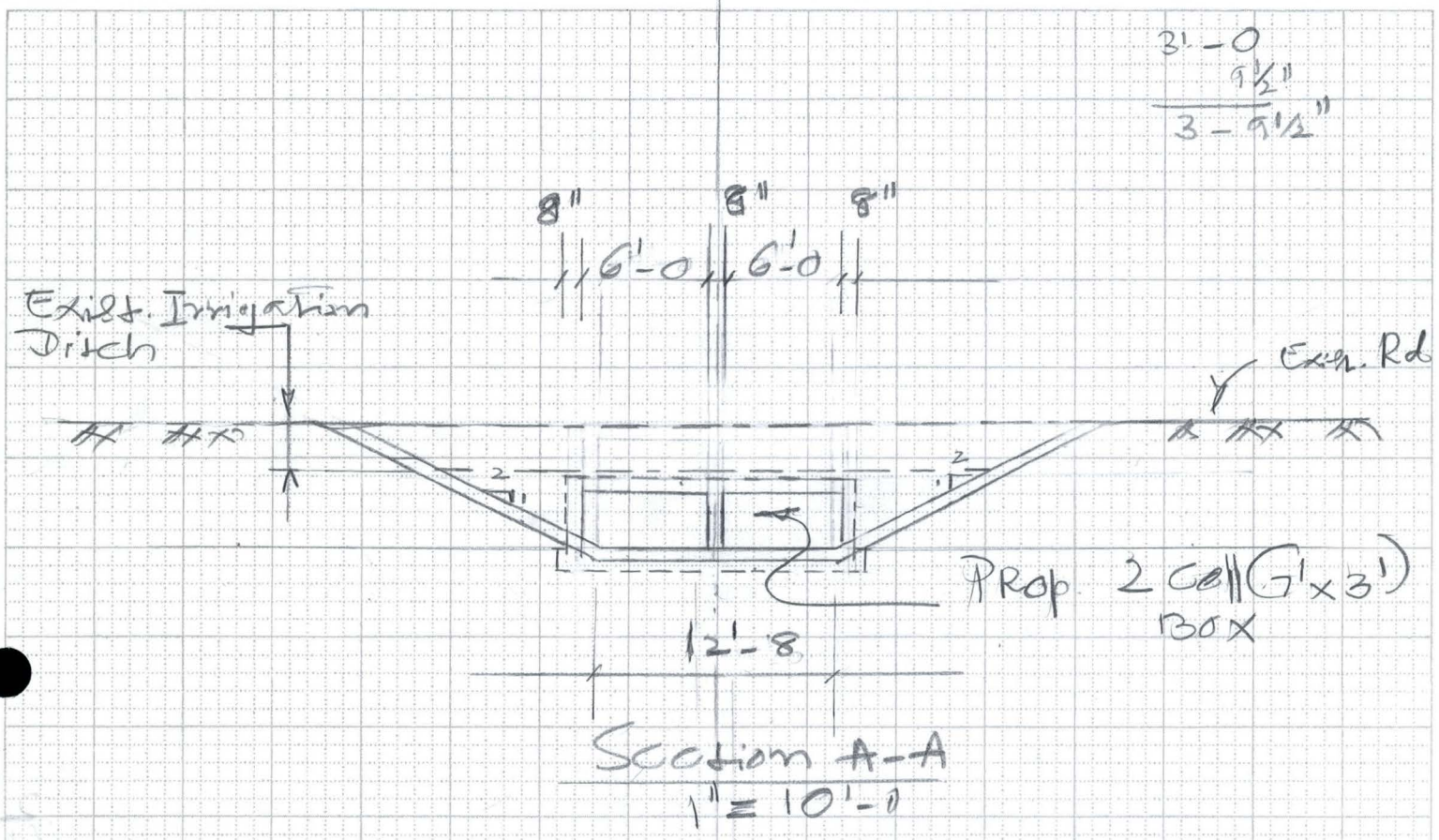

Section A-A
1" = 10'-0

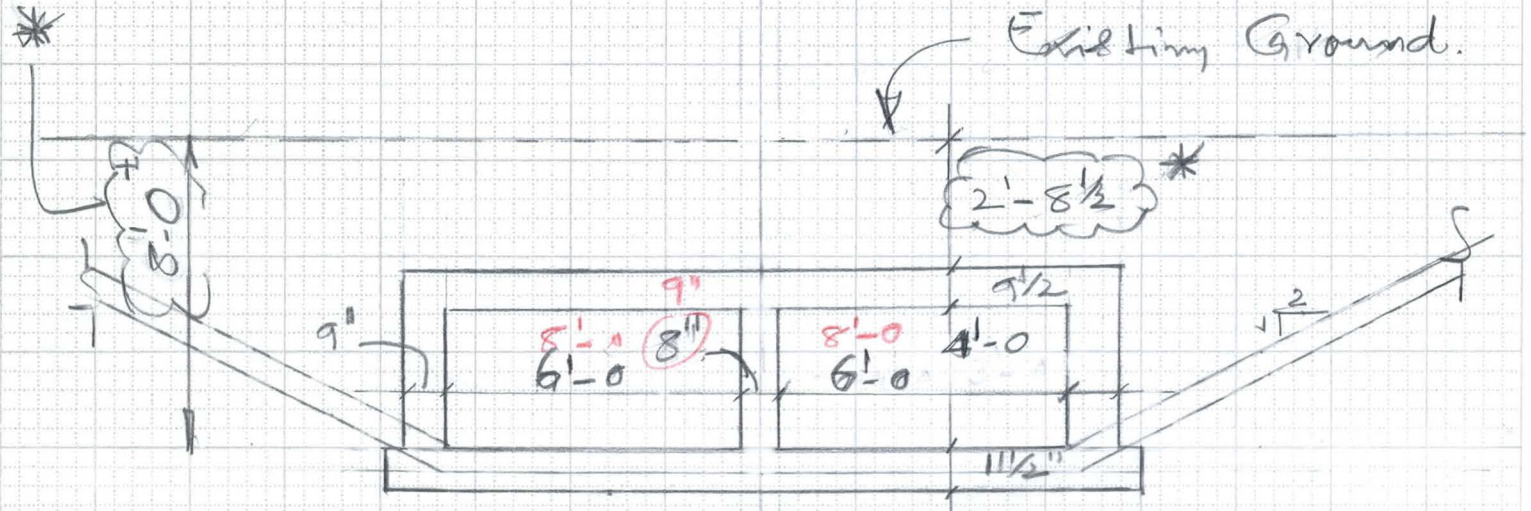

Section B-B (Con Box)
¼" = 1'-0

6'-6"
- 3-9½
2'-8½"

* These Dimensions to be Checked before final Design.

FLOOD CONTROL DISTRICT OF MARICOPA COUNTY

PROJECT Dysart Drain PAGE 3-A OF ____

DETAIL ____ COMPUTED KVH DATE 3/94

____ CHECKED BY ____ DATE ____

Section at the Middle of Collector Channel

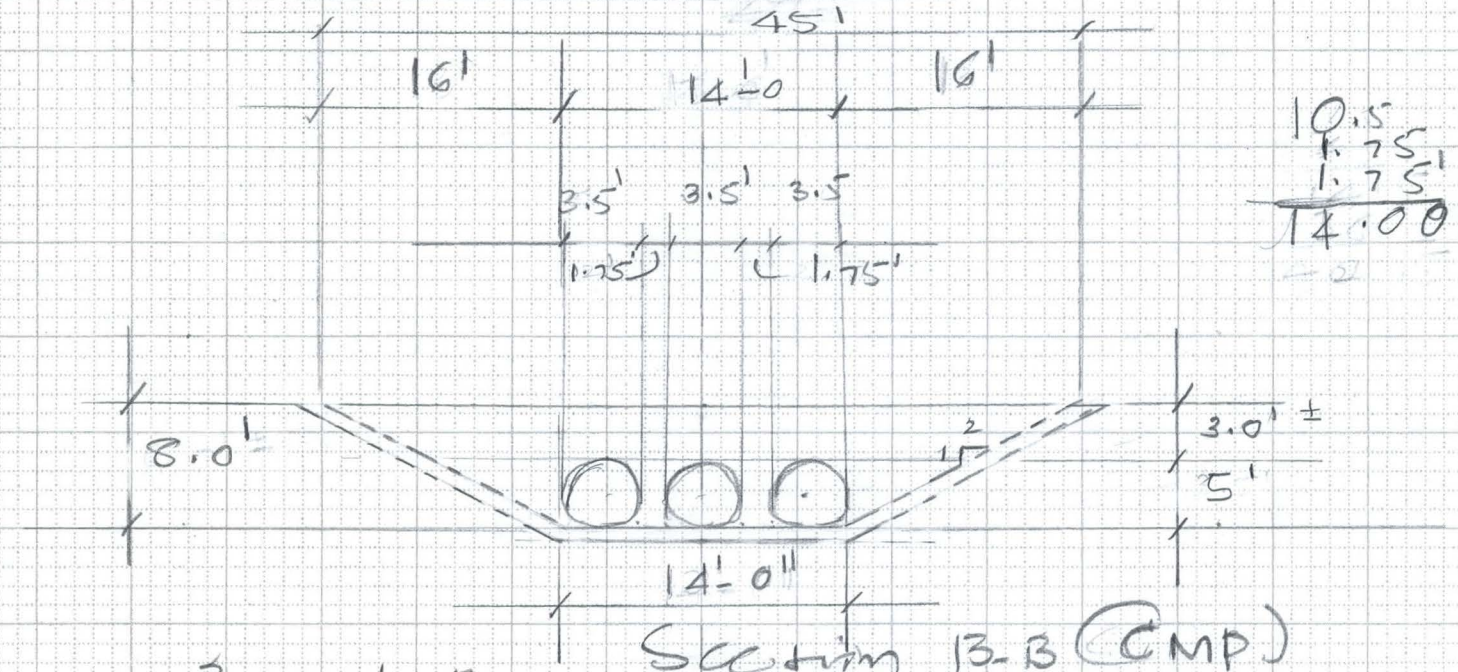

Section 13-B (CMP)
1" = 10'

1) 2 Barrel Box:

2 (6.0 × ~~4.0~~ 5.0') = ~~48~~ 60 Sq ft

a) Q = 600 = AV = ~~48~~ 60 × V, V = ~~12.5~~ 10.0 ft/sec

2) 3-Cmp. Culvert

$A = \left(3.14 \times \frac{3.5^2}{4}\right) 3 = 28.9$ Sq ft

Q = 600 = 28.9 × V, V_1 = 20.8 ft/sec

3)

using 2 - 5' Diameters

$A = \left(\frac{3.14 \times 5^2}{4}\right) 2 = 39.25$

Q = AV = 39.25 × V, V_2 = 15.3 ft/sec

FLOOD CONTROL DISTRICT OF MARICOPA COUNTY

PROJECT Dysart Drain PAGE 3-B OF

DETAIL COMPUTED KVH DATE 3/94

CHECKED BY DATE

Section at the South End of Collector Chl

a) 2 Cell Box 8'x4' 5.0

$A = 2(8 \times 5) = \cancel{64}\ 80$

$Q = A \times V = 840 = 64 \times V,\ V = \cancel{13.1}\ 10.5$ '/sec

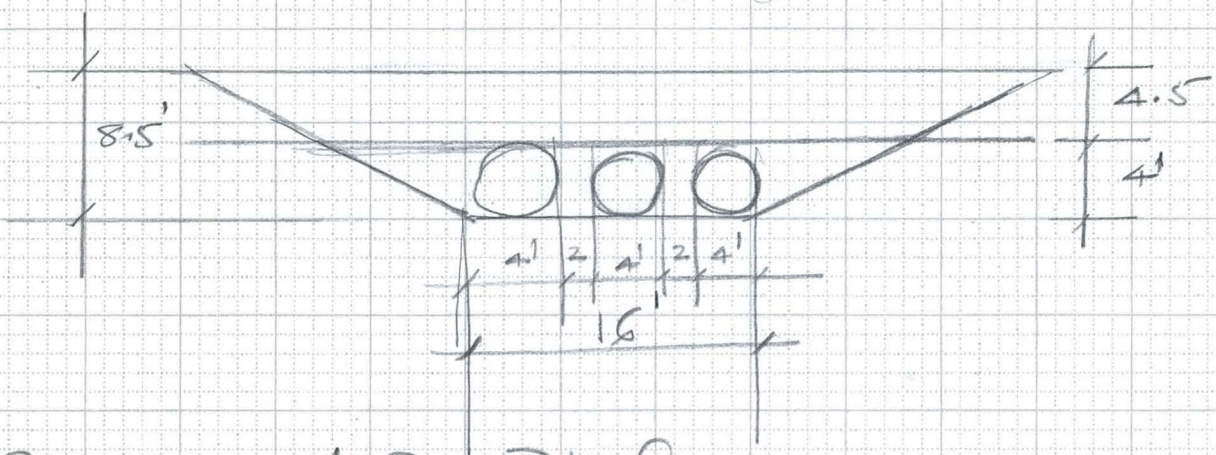

b) using 3 - 4' Dia Pipes

$A_1 = \left(\frac{3.14 \times 4^2}{4}\right)3 = 37.7$ sq ft

$Q = AV = 37.7 \times V = 840,\ V = 22.3$

c) using 2 - 5' Dia pipes & 1 - 2' Dia pipe

D) 2 - 6 DIA pipes

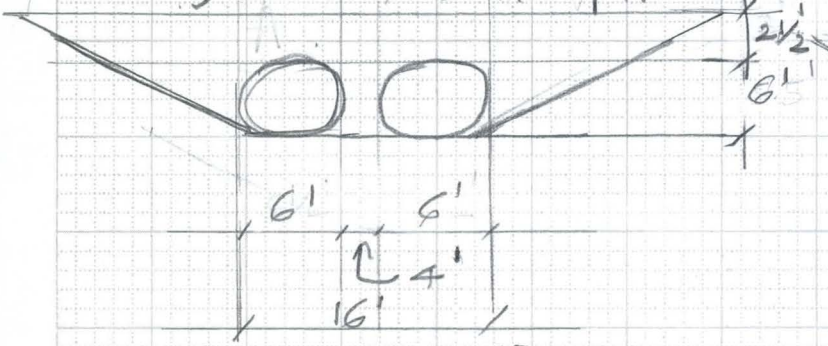

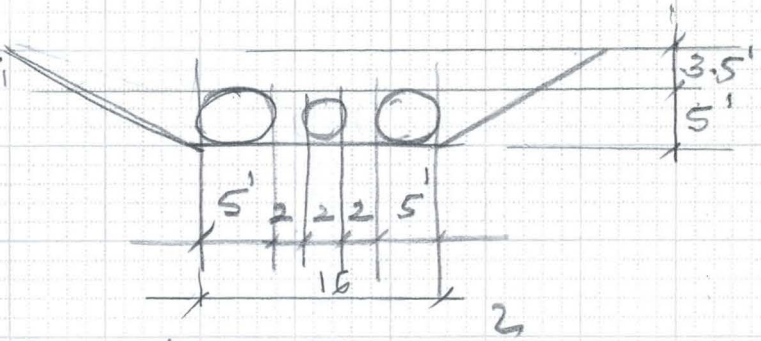

$A_2 = \left(3.14 \times 6^2/4\right)2 = 56.52$

$Q = 840 = 56.52 \times V$

$V_2 = 14.9$ ft/sec

$A_3 = \left(\frac{3.14 \times 5^2}{4}\right)2 + \frac{3.14 \times 2^2}{4} = 42.39$

$V = 840/42.39 = 19.8$ '/s

6910-153 4-90

FLOOD CONTROL DISTRICT OF MARICOPA COUNTY

PROJECT Dysart Drain PAGE (4) OF ____

DETAIL ____ COMPUTED KVH DATE 2/94

____ CHECKED BY ____ DATE ____

~~St~~ 50'

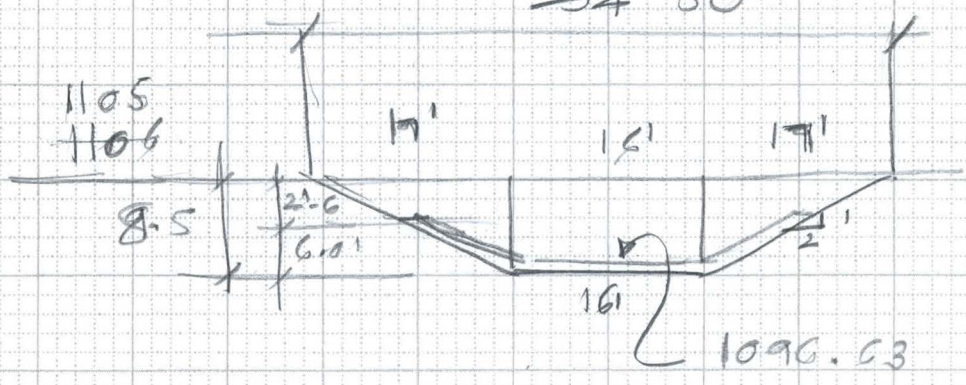

1096.63

Start: 0+00

600'	1108
1000	1110
1500	1112
2100	1114
2600	1116

Section at South End
Near Basin

1105
1106.00
1096.63
8.37
say 8.5'

34
16
50

FLOOD CONTROL DISTRICT OF MARICOPA COUNTY

PROJECT Dysart Drain PAGE 4 OF ____

DETAIL ____ COMPUTED KNH DATE 2-1-94

____ CHECKED BY ____ DATE ____

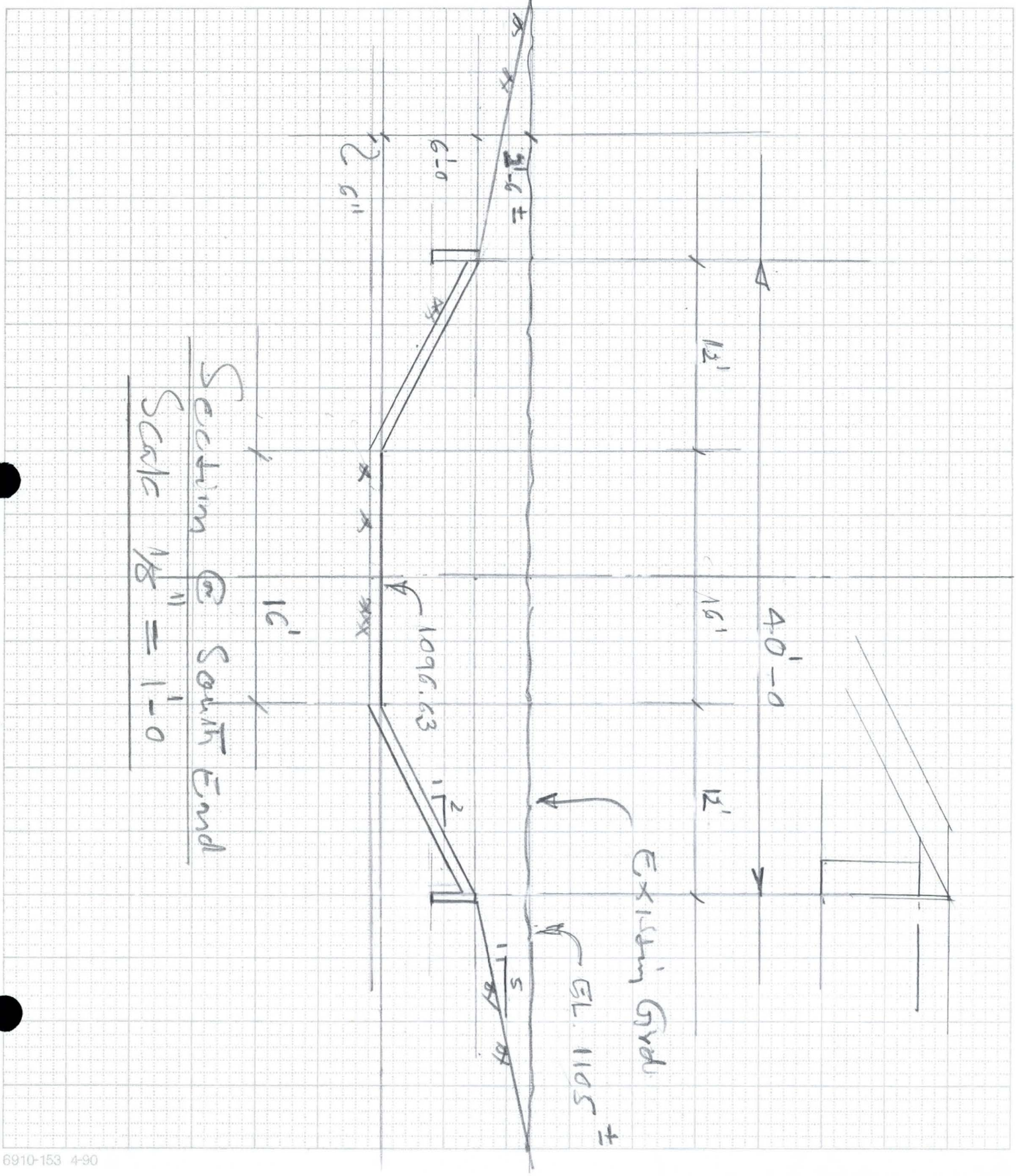

FLOOD CONTROL DISTRICT OF MARICOPA COUNTY

PROJECT Dysart Drain PAGE (6) OF ____

DETAIL Prelimmary COMPUTED KVH DATE 2/94

CHECKED BY ____ DATE ____

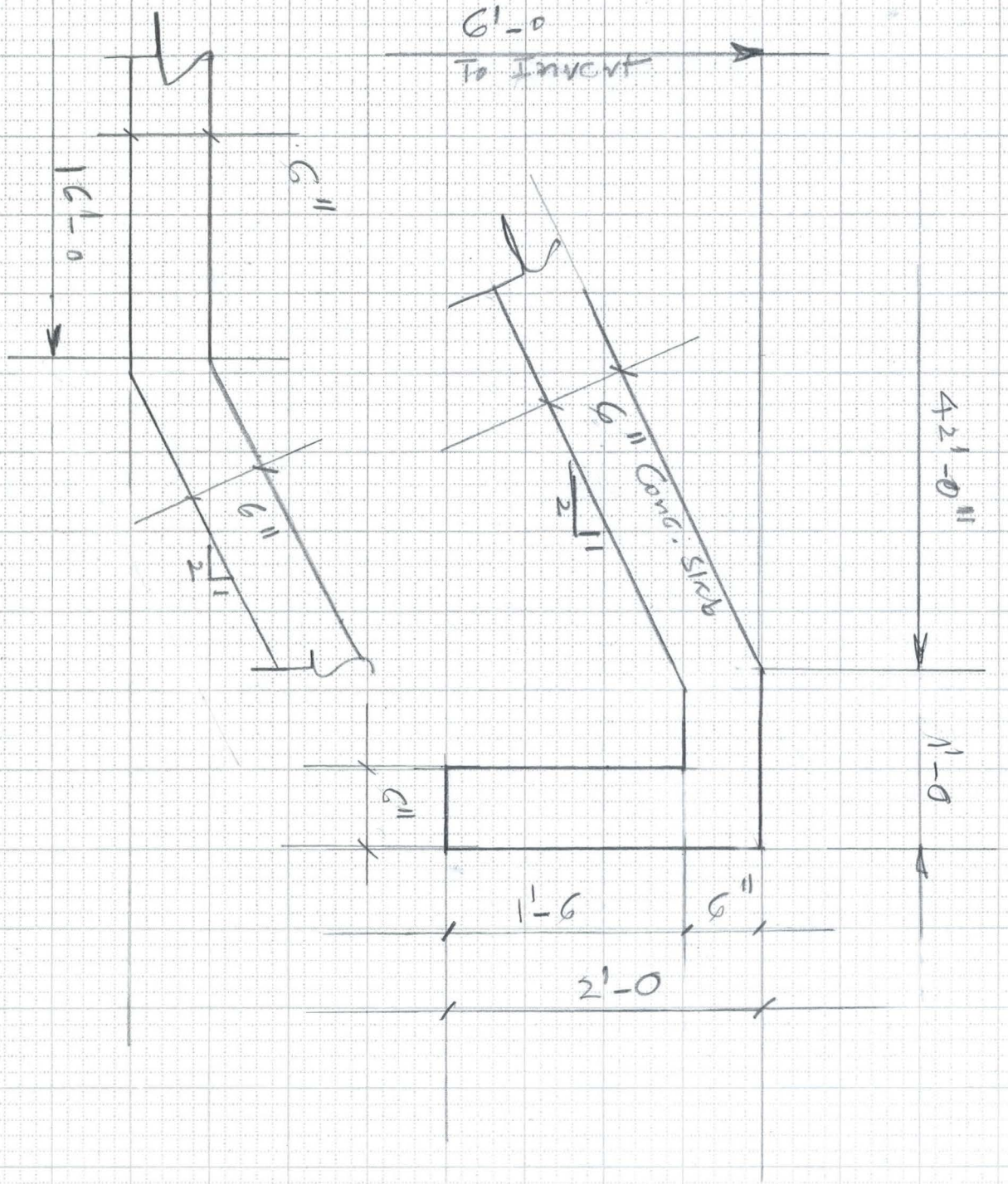

FLOOD CONTROL DISTRICT OF MARICOPA COUNTY

PROJECT Dysart Drain PAGE 2 OF ____

DETAIL ____ COMPUTED KVH DATE 5/94

____ CHECKED BY ____ DATE ____

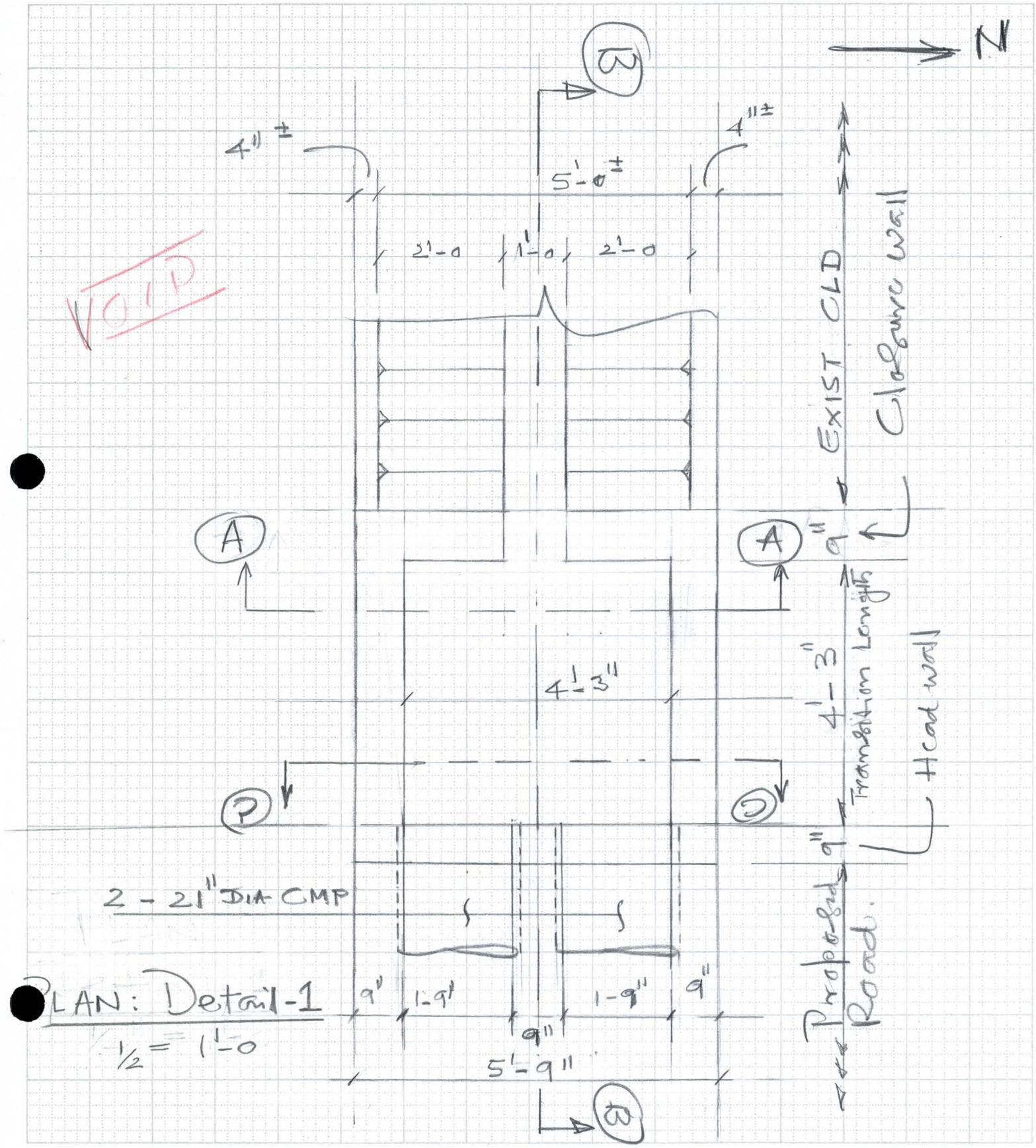

PLAN: Detail-1

1/2 = 1'-0

FLOOD CONTROL DISTRICT OF MARICOPA COUNTY

PROJECT Dysart Drain PAGE 3 OF ____

DETAIL ____ COMPUTED KNH DATE 5/94

____ CHECKED BY ____ DATE ____

VOID

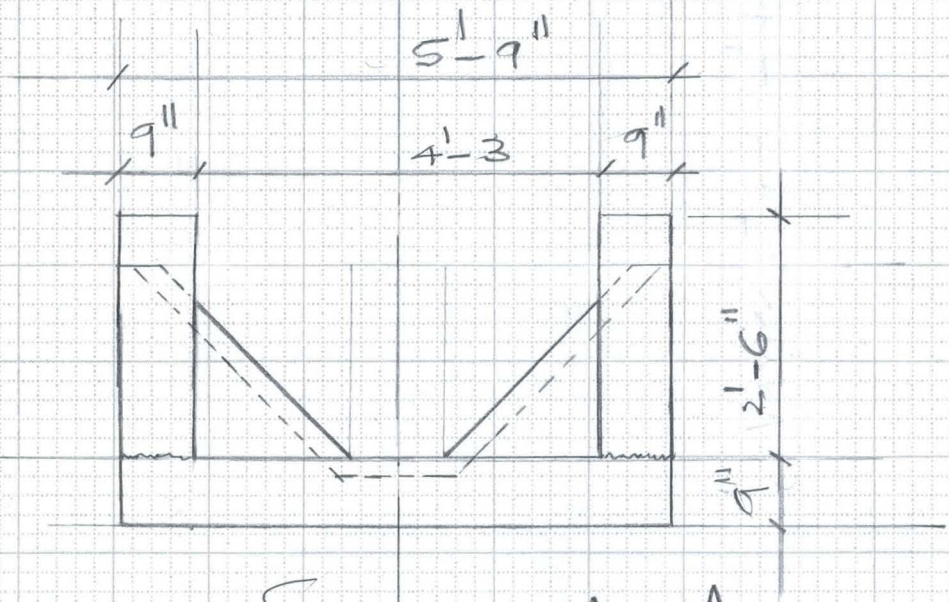

Section A-A

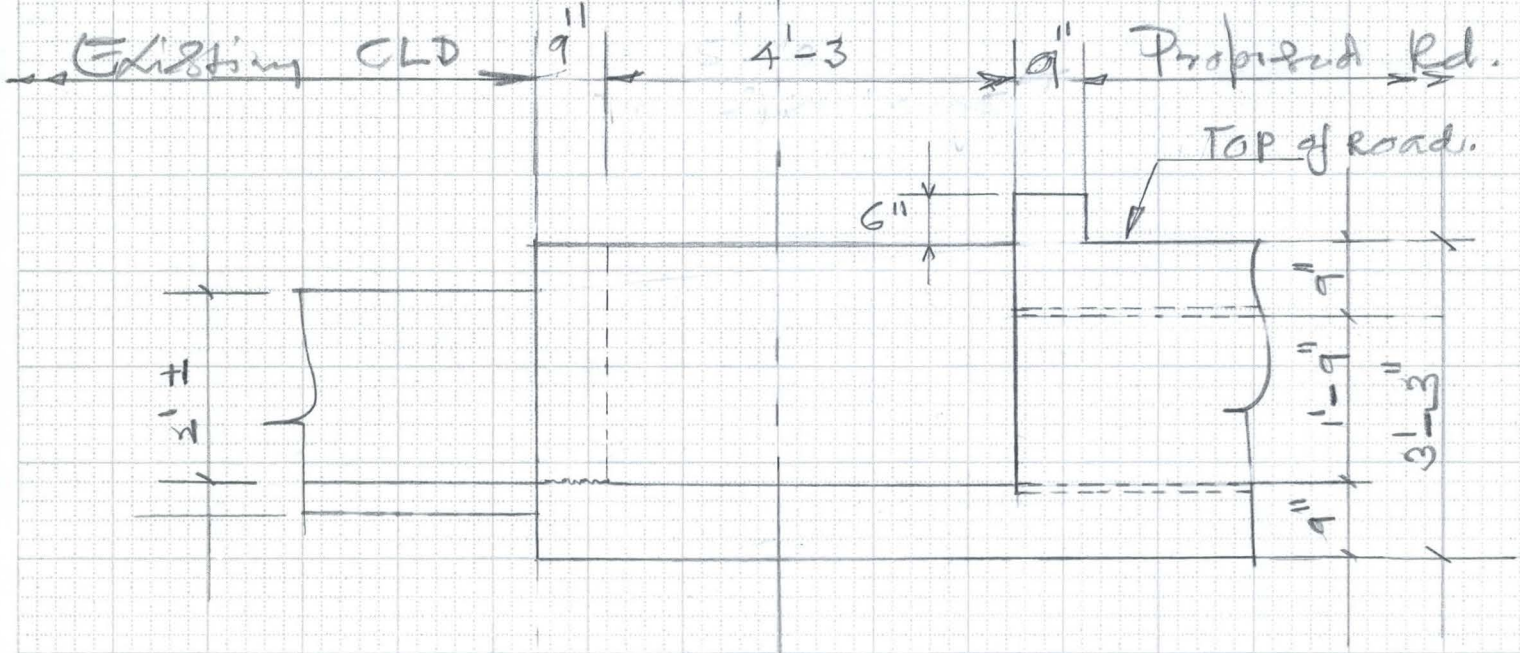

Section B-B

1/2" = 1'-0"

FLOOD CONTROL DISTRICT OF MARICOPA COUNTY

PROJECT Dysart Drain PAGE 4 OF ____

DETAIL ____ COMPUTED KVH DATE 5/94

____ CHECKED BY ____ DATE ____

VOID

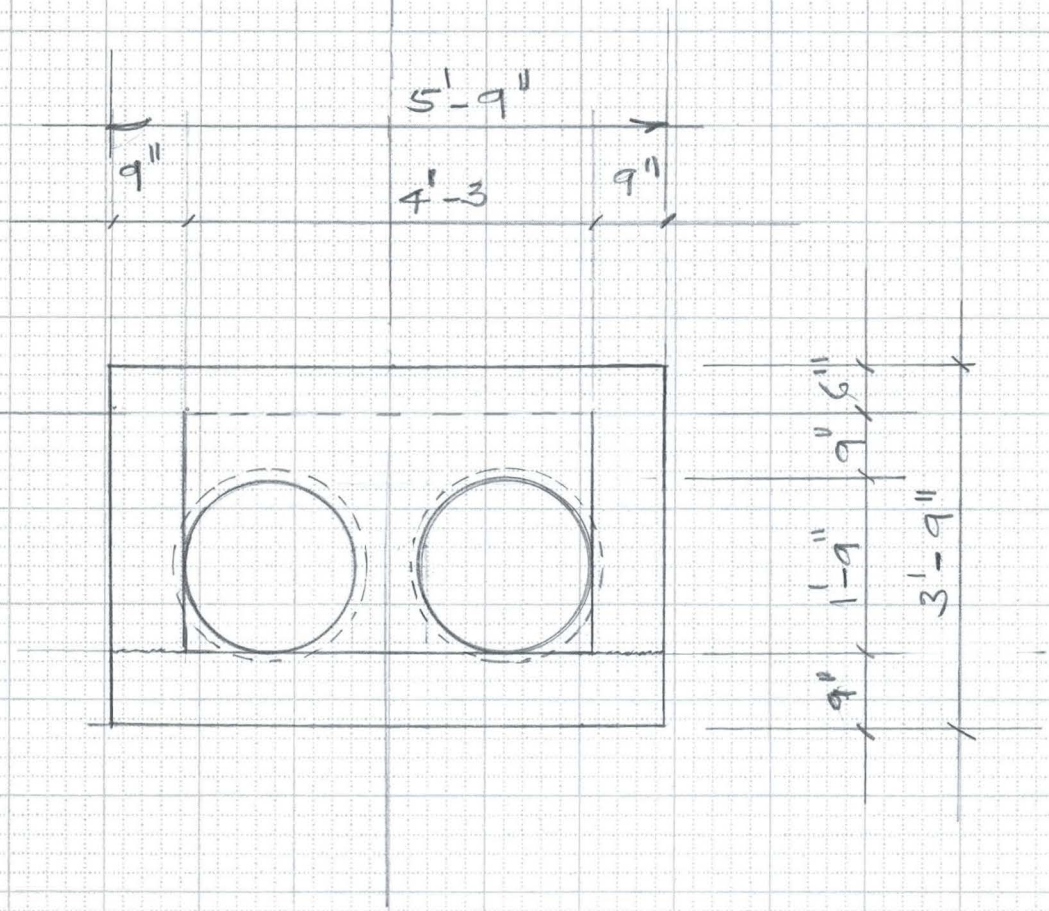

Section C-C

1/2" = 1'-0

FLOOD CONTROL DISTRICT OF MARICOPA COUNTY

PROJECT Dysart Drain PAGE 5 OF ____

DETAIL ____ COMPUTED KVH DATE 5/94

____ CHECKED BY ____ DATE ____

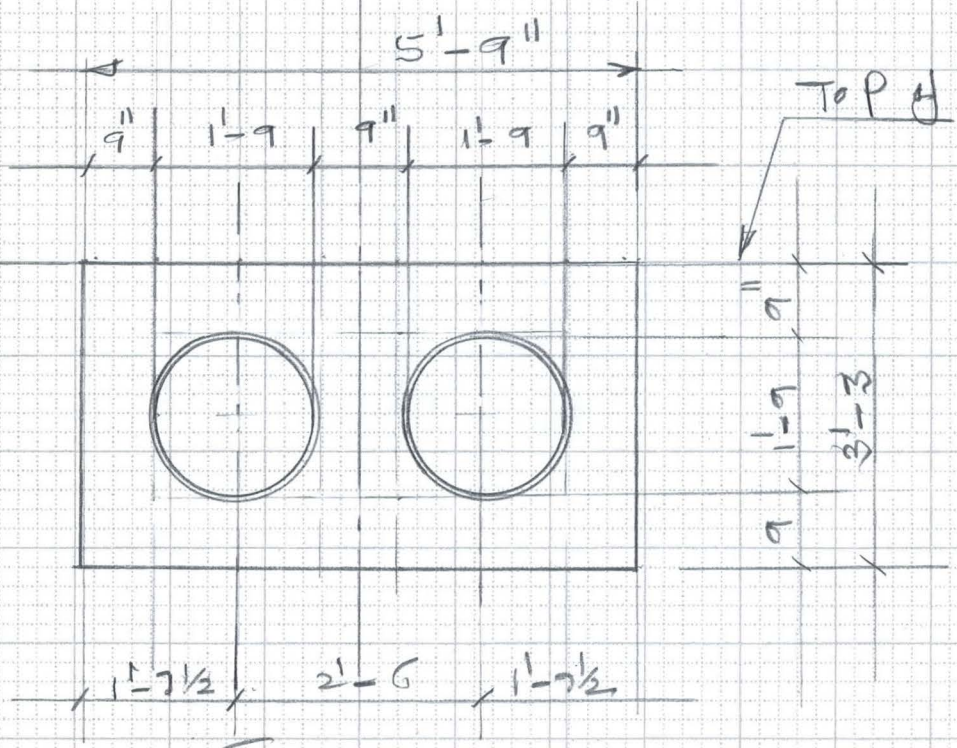

VOID

Section D-D

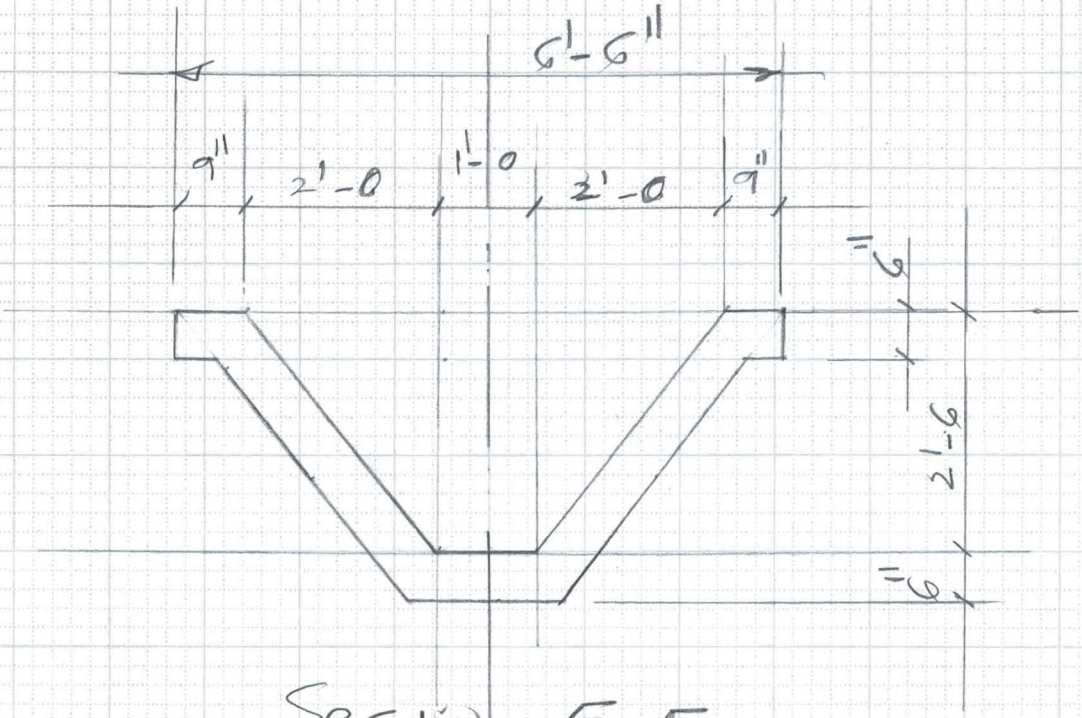

Section E-E

FLOOD CONTROL DISTRICT OF MARICOPA COUNTY

PROJECT Dysart Drain PAGE ___ OF ___

DETAIL Collector Channel COMPUTED KVH DATE 7/94

Tailwater profile CHECKED BY ___ DATE ___

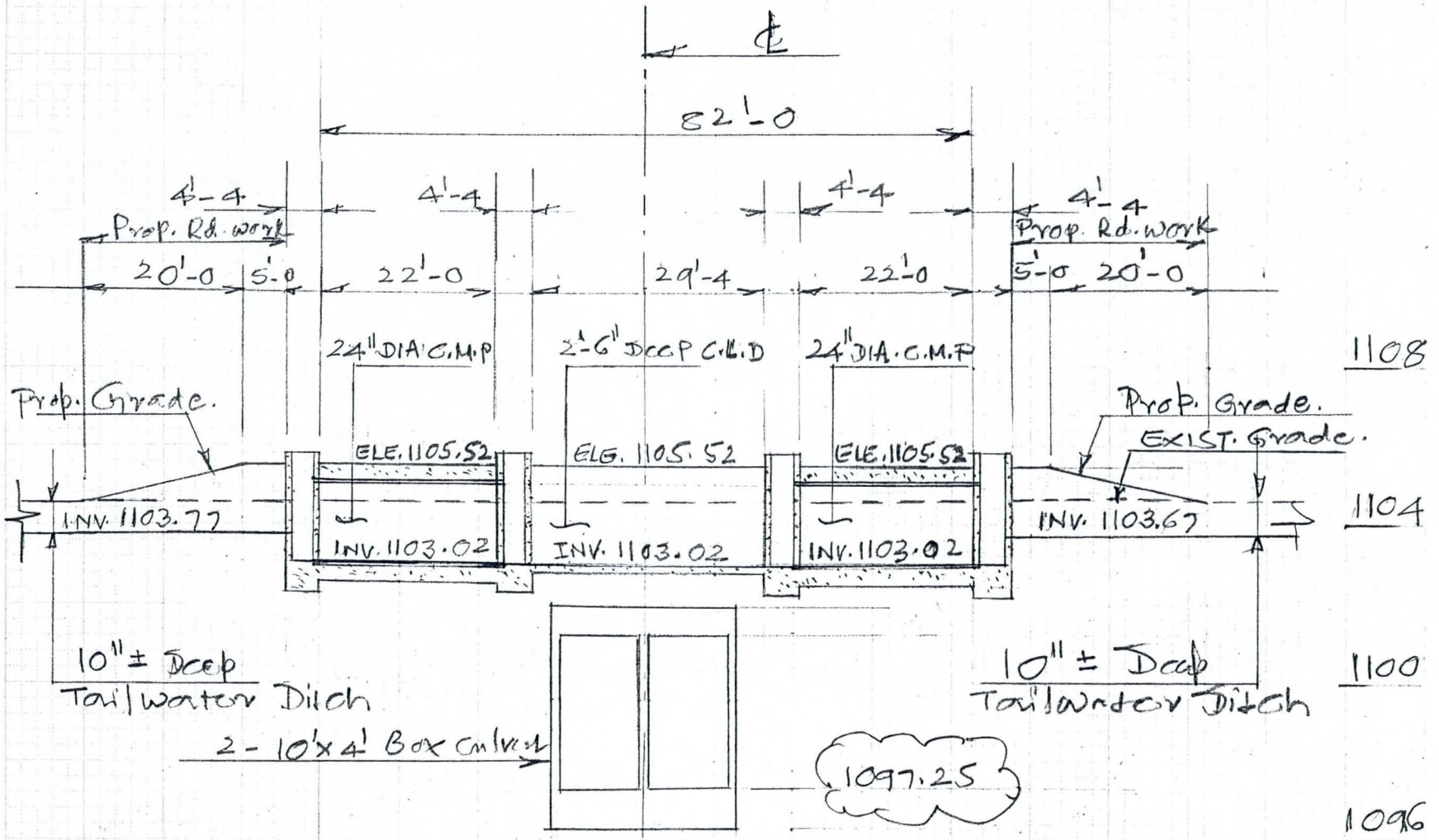

Profile Along Tailwater Ditch

Scale 1" = 20'-0

FLOOD CONTROL DISTRICT OF MARICOPA COUNTY

PROJECT Dykeart Drain PAGE ___ OF ___

DETAIL Collector Chl. COMPUTED KVH DATE 6/94

Squiers Farm Rd CHECKED BY ___ DATE ___

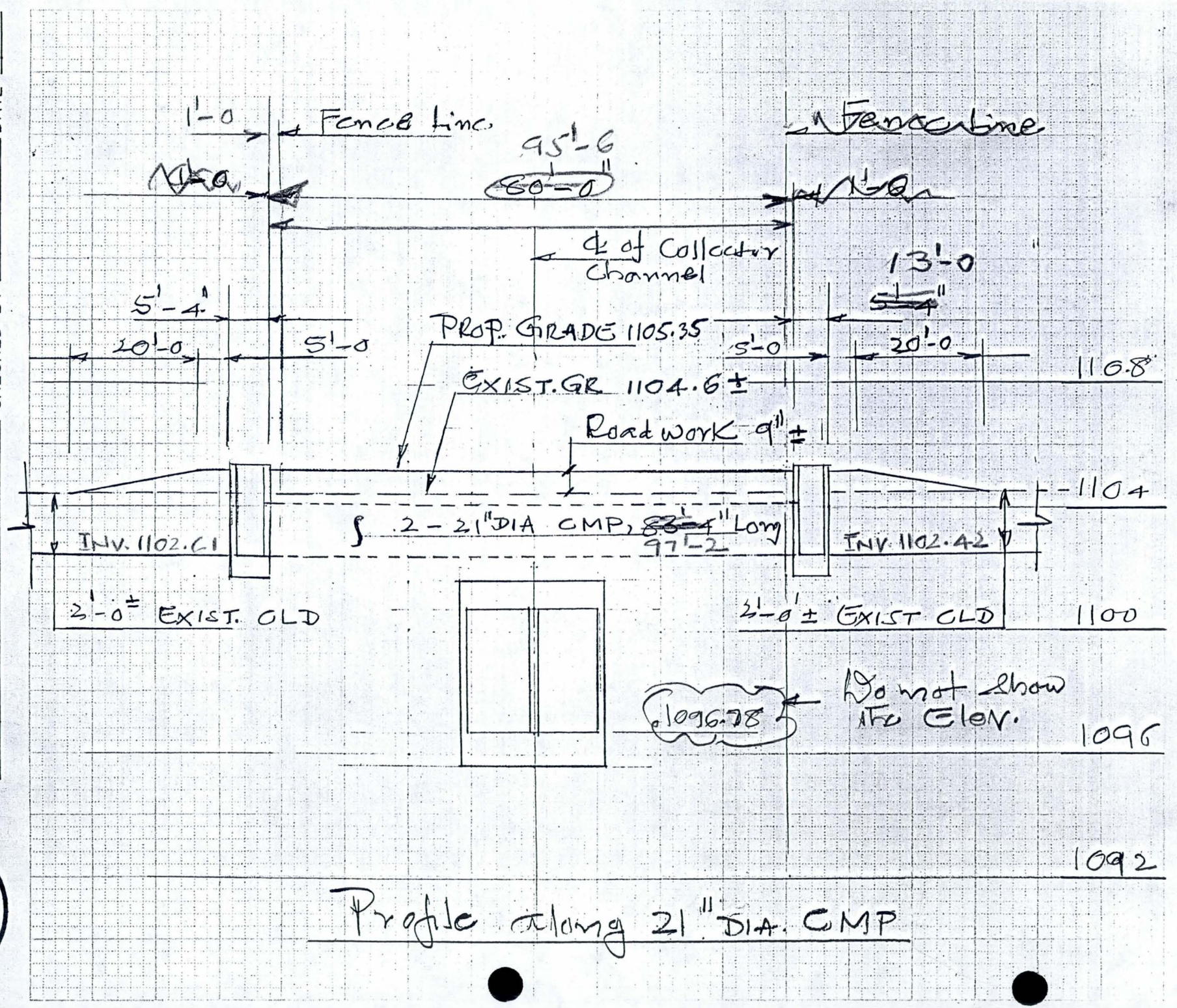

FLOOD CONTROL DISTRICT OF MARICOPA COUNTY

PROJECT Dysart Drain — PAGE ___ OF ___

DETAIL Collector Chl. — COMPUTED KVH — DATE 6/94

Dysart Rd & Southern Ave — CHECKED BY ___ — DATE ___

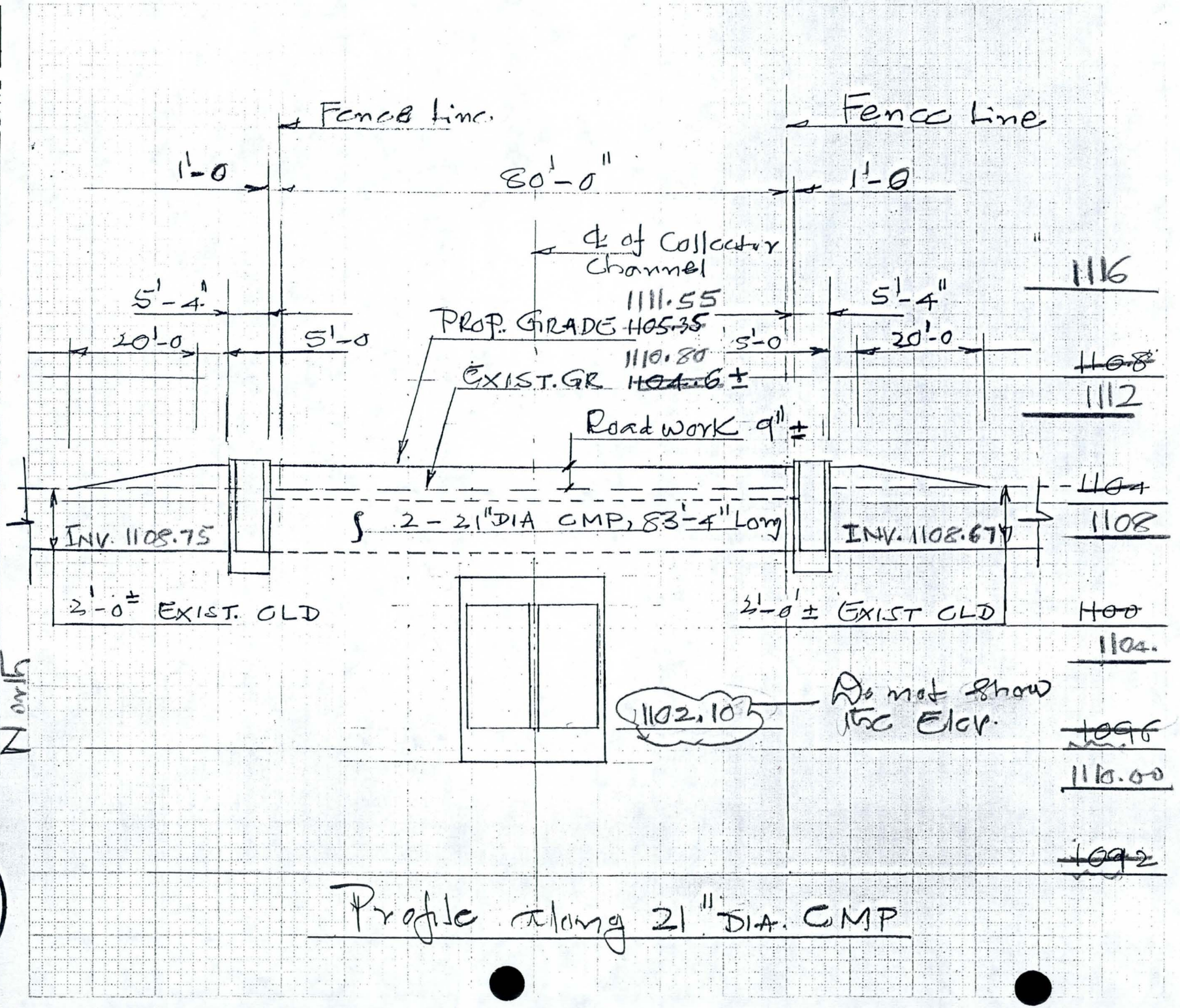

Profile along 21" DIA. CMP

FLOOD CONTROL DISTRICT OF MARICOPA COUNTY

PROJECT _____ PAGE ____ OF ____

DETAIL _____ COMPUTED _____ DATE ____

_____ CHECKED BY _____ DATE ____

General Notes

All Concrete shall be Grade "A", f'_c = 3000 psi unless otherwise noted

Reinforcing steel shall conform to ASTM Specification A 615 and shall be Grade 60, f_s = 24,000 psi

Corrugated Metal pipe shall be (2 2/3" x 1/2") and Thickness 0.064". Pipe shall be plain galvanized, bituminous Coated and as per MAG Specifications

FLOOD CONTROL DISTRICT OF MARICOPA COUNTY

PROJECT Dysart Drain PAGE (4) OF ____

DETAIL Tail water Ditch COMPUTED KvH DATE 5/94

CHECKED BY ____ DATE ____

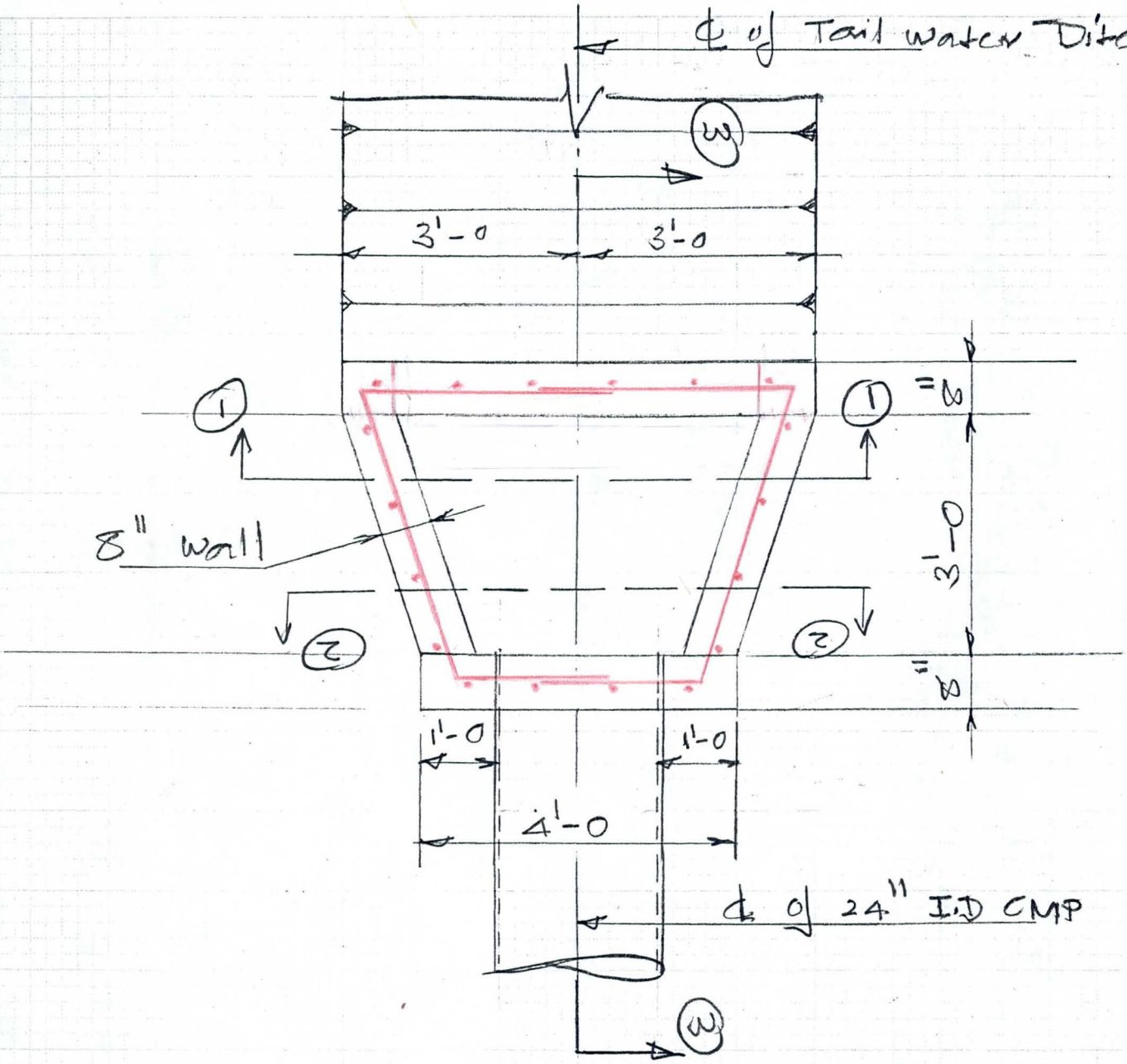

Detail - 2

½" = 1'-0

FLOOD CONTROL DISTRICT OF MARICOPA COUNTY

PROJECT Dysart Drain PAGE (8) OF ____

DETAIL Tail water pipe COMPUTED KVH DATE 5/94

CHECKED BY ____ DATE ____

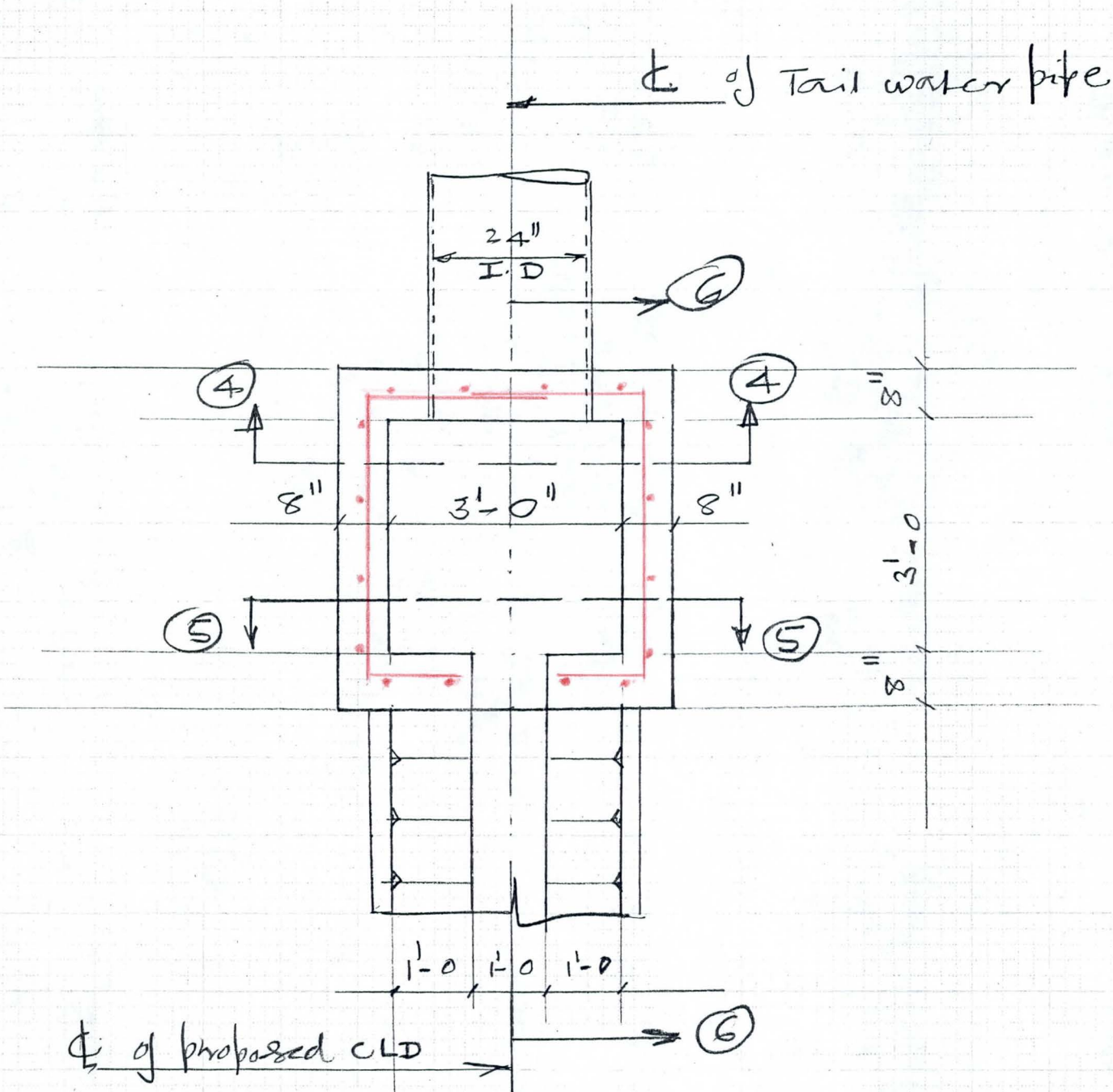

Detail - 3

½ = 1'-0

FLOOD CONTROL DISTRICT OF MARICOPA COUNTY

PROJECT _____ PAGE 1 OF _____

DETAIL _____ COMPUTED _____ DATE _____

_____ CHECKED BY _____ DATE _____

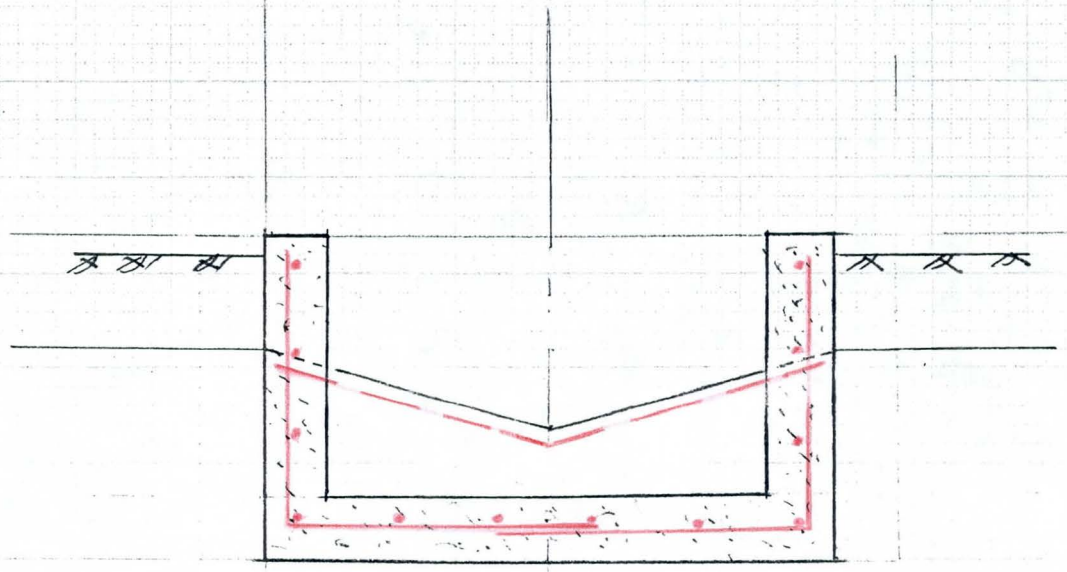

Section 1-1

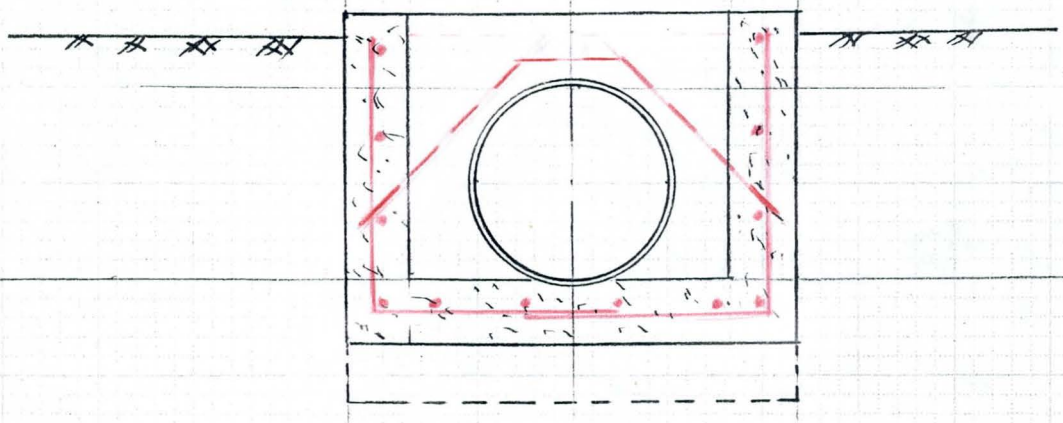

Section 2-2

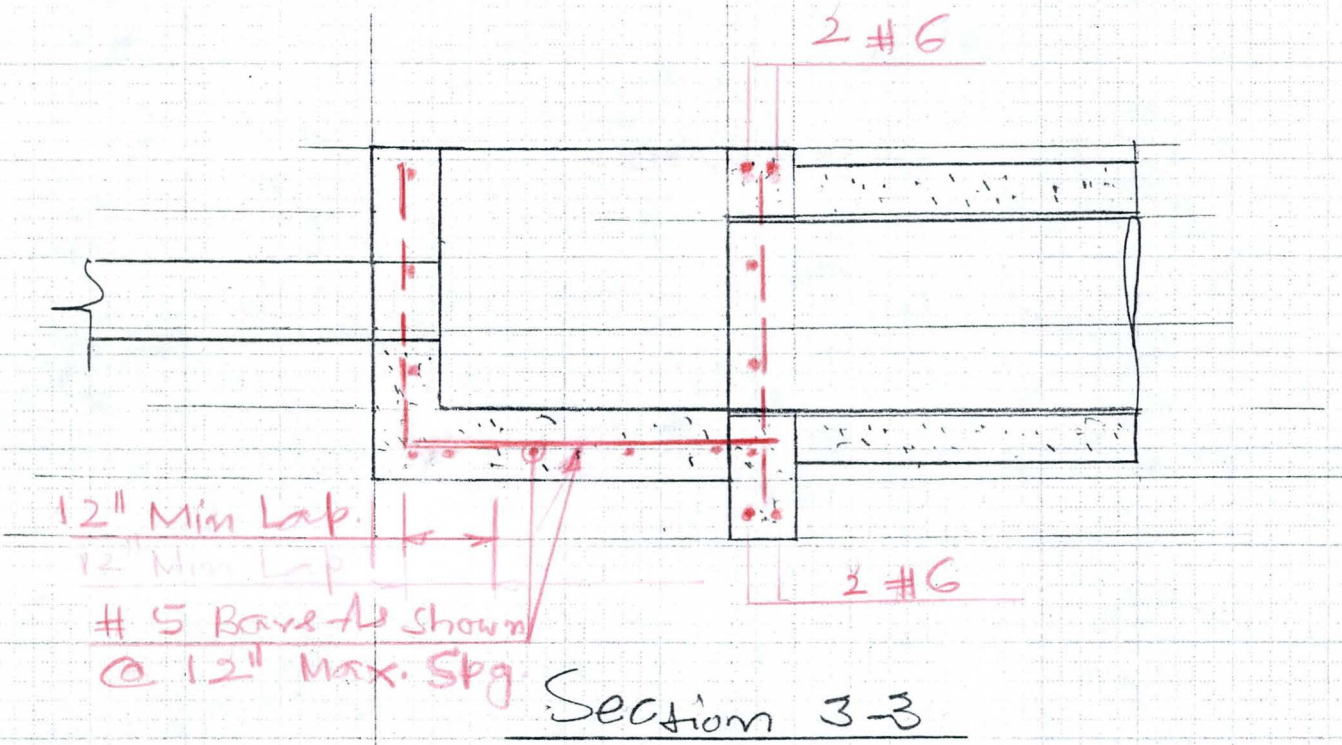

Section 3-3

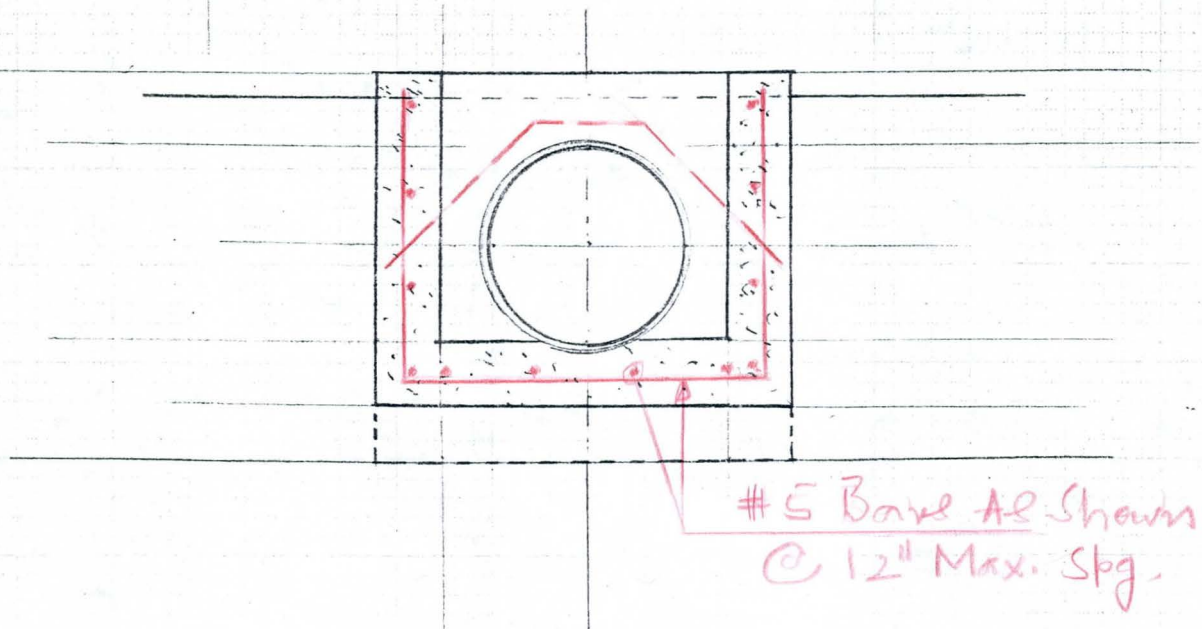

Section 4-4

FLOOD CONTROL DISTRICT OF MARICOPA COUNTY

PROJECT _____ PAGE 3 OF _____

DETAIL _____ COMPUTED _____ DATE _____

_____ CHECKED BY _____ DATE _____

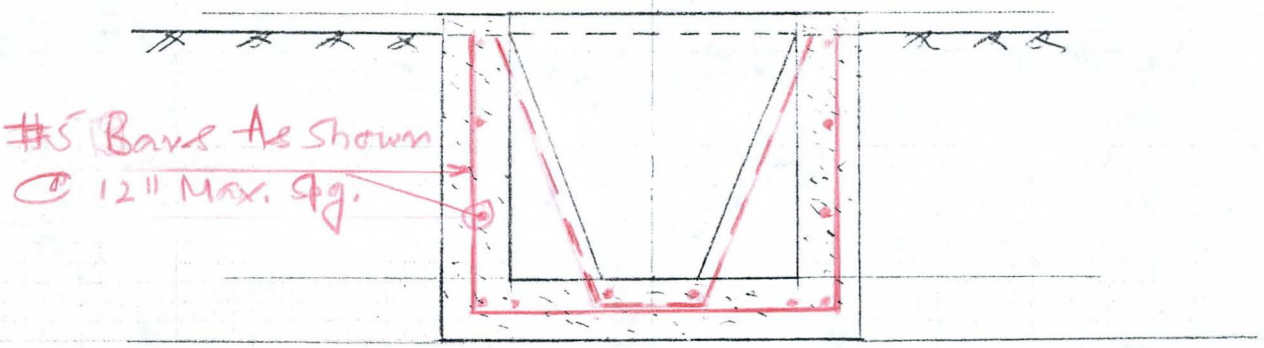

Section 5-5

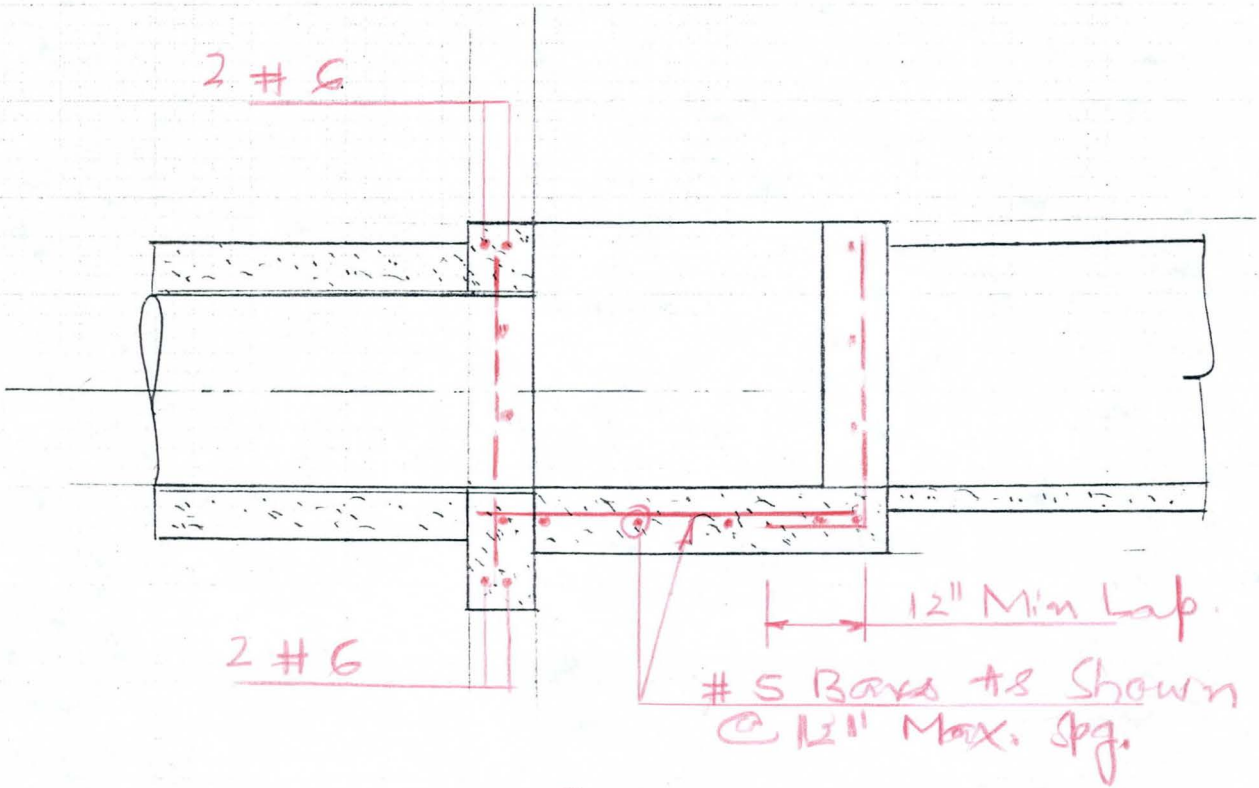

Section 6-6

FLOOD CONTROL DISTRICT OF MARICOPA COUNTY

PROJECT Dysart Drain PAGE 1-A OF ____

DETAIL Collector Channel COMPUTED KVH DATE 8/94

Style

CHECKED BY ____ DATE ____

Final Style

Pipe Length:

Sect. A-A : L = 47' Same as before — 47 Lin ft (24" ϕ)

Sect. B-B : L = (23-4) + (36-10) = 60 × 2 = 120 (2 pipes)

Sect. C-C : L = [(23'-4) + (23'-4)] 2 = 94

Total 21" ϕ pipe = (120 + 94) = 214 — 214 Lin ft (21" ϕ)

Excn (South Farm Rd.)

a) L = [(82 + (4-4)2 + 3)] - (29 1/4)

= 69'-4 width = 7'

69.33 (2×7)/27 = 36 CY — (36+6) = 42 — 42 CY (Excn)

b) CLD (Excn), L = 69.33

3 / 2' — (3 × 2) × 29'-4/27 = 6 CY

Backfill: [{(7×2) - 3.14 × 2²/4 × 2} + (7 × 0.75)] 69.33/27 = 33 CY — 33 CY (Backfill)

Trim Grading:

a) Excn, L = (23-4) + (36'-10) + (5'-4)3 + 1 3 + 3' = 92'

(7×2) 92/27 = 48 CY

b) CLD Excn: L = 27.33' — 48 + 8 = 56 — 56 CY Excv.

2' 1 2' / 2' — (4×2) 27.33/27 = 8 CY

Backfill: [{(7×2) - 3.14 × 2²/4 × 2} + 7 × 0.75] 92/27 = 44 CY — 44 CY Backfill

North Farm Rd

a) (23'-4)2 + (5'-4)4 + 3 = 71'

Excv = (6×2) 71/27 = 37 CY — 45 (Excv)

b) Backfill = 44 (71/92) = 34 CY — 34 (Backfill)

c) CLD Excn = 8 CY, (37+8) = 45 CY

FLOOD CONTROL DISTRICT OF MARICOPA COUNTY

PROJECT Dysart Drain PAGE 2-A OF

DETAIL Collector Channel COMPUTED KVH DATE 8/94

CHECKED BY DATE

Tail Water Ditch (Contd) FINAL Qty's

a) Conc. Encasement (Same as before) = 11 CY Class B

b) Conc. Boxes: (Same as before)

2 CY per Box

N. Farm Rd = ~~4~~ 2

S. Farm Rd = 3 + 3x1 = 6 (3 times Longer)

Tail water = 4

Total Conc = ~~14~~ 12 x 2 = ~~28~~ CY

24

~~28~~ CY Class-A Conc.

c) CLD:

N. & S. Farm Rd.

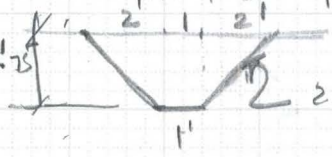

W = (2.9x2)+1 = 6.8 Lbl

L = 27'-4

Total Sq. Ft = (27.33 x 6.8) = 186 Sq. Ft

Total CY = (6.8 x 3/12 x 27.33) 2/27 = 3.4

N & S.

Say ~~4~~ 2 CY (N & S)

Tail water Ditch:

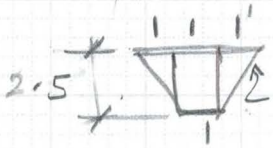

Width = (2.7x2)+1 = 6.4

Total CY = (6.4 x 3/12 x 29.33)/27

= 1.7 CY

Say 2 CY

Total Class-B Conc = (11 + ~~4~~ 2 + 2)

(Encasement) (CLD)

17 CY (Class-B Conc.)

FLOOD CONTROL DISTRICT OF MARICOPA COUNTY

PROJECT Dysart Drain PAGE ____ OF ____

DETAIL Collector Chl. COMPUTED MVH DATE 8/94

Styls. CHECKED BY ____ DATE ____

FINAL Styls

1) Corrugated Metal pipe 24"

$L_1 = (22+22) = 44'$ (Tailwater)

2) 21" CMP — $(84' + 97) 2 = 362'$

CMP

$22 + 30 + 20 \approx \$25$

$22 + 46 + 34 = \$35$

$20 + 35 + 28 \approx \$30$

use $35/Lft for 21" ϕ pipe

& $45/Lft for 24" ϕ pipe

Concrete (24" Class II)

$31, 30, 48 \approx \$40/-$

$40, 46, 42 \approx \$45/-$

$36, 40, 35 \approx \$40$

Concrete 24" (Class III)

$32, 45, 48, \approx \$40/-$

$35, 30, 50, \approx \$40/-$

Use an Avg. price of $45/- Lft

6910-153 4-90

FLOOD CONTROL DISTRICT OF MARICOPA COUNTY

PROJECT Dysart Drain PAGE 1 OF

DETAIL Collector Channel COMPUTED KVH DATE 7/94

Qty-S CHECKED BY DATE

Preliminary ESL

Pipe Length:

Sect. A-A: (23-4)2 = 46-8 — 24" CMP | 47 L.ft (24")

Section BB: L = (97'-2")2 = 194-4", | ~~195 L.ft (21" ϕ)~~

Section C-C: L = (83'-4)2 = 166-8" | ~~167 L.ft (21" ϕ)~~

Total 21" ϕ pipe, (195+167) = 362 L.ft

Excv^n:

South Farm Rd:

a) L_1 = 82 + (5'-4)2 + 3' ≅ 96' 2-21" ϕ pipe

L_2 = 96 + 13 + 5 + 3 = 117'

width = 7', (7 × 2) ~~96~~ 117/27 = 60 CY

Depth Approx

Backfill: {[(7×2) − 3.14 × 2.0²/4] + [7 × 0.75]} ~~96~~ 117

O.D = 2.0' ±

= 1547 cfl = 70 CY

b) North Farm Rd:

Excv^n (Same as S. Farm Rd. | 49 CY

Backfill (— " —) | 57 CY

Tailwater Ditch:

Excv. (3.5 × 1.75' ±) 96/27 = 22 CY

L = 82 + (5'-4)2 + 3 ≅ 96'

6910-153 4-90

FLOOD CONTROL DISTRICT OF MARICOPA COUNTY

PROJECT Dysart Drain PAGE 2 OF

DETAIL Collector Chnt COMPUTED KVH DATE 7/94

CHECKED BY DATE

PRELIMINARY ESTIMATE

Tailwater Ditch (Contd)

a) Conc. Encasement:

$\left[(3.25 \times 3.25) - \left(3.14 \times \frac{2.25^2}{4}\right)\right] 22 \times 2$ ← Both sides

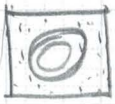

$= 290$ cft $\approx$ $\boxed{11 \text{ cy}}$

b)

$L = (2.7 \times 2) + 1 = 6.4'$

Qty $= (6.4 \times 0.25)\, 29.33 = 46.9$ cft

$= 1.7 \approx \boxed{2 \text{ cy}}$

Concrete Boxes:

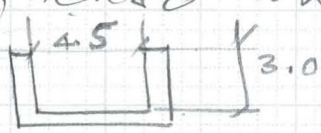

1) Walls: $\left(\frac{8}{12} \times 3\right) 5.33 \times 2 = 21.3$ cft

2) $\left[(4.5 \times 3) - \left(3.14 \times 2.0^2/4\right)^2\right] \frac{8}{12} = 4.2$

c) $\left(\frac{1}{2} \times 2.0 \times 2\right) 2 \times \frac{8}{12} = 2.7$

d) $(5.83 \times 5.33) \frac{8}{12} = 20.7$

48.9 cft

$= 1.8$, say 2 cy

No. of Boxes

N. Farm Rd $= 2$

S. Farm Rd $= 4$

T. Water, $1 + 1 \times 3 = 4$ } 10

↑ 3 times Larger

Total Conc. $= 10 \times 2 = \boxed{20 \text{ cy}}$

Total Conc $= (11 + 2 + 20) = 33$ cy

33 cy

6910-153 4-90

FLOOD CONTROL DISTRICT OF MARICOPA COUNTY

PROJECT Dysart Drain PAGE 3 OF ____

DETAIL Collector Chan. COMPUTED KVH DATE 7/94

Qty's CHECKED BY ____ DATE ____

PRELIMNARY ESTIMATE

Summary Qty's

1) Ex Cvn. (60 + 49 + 22) CY = 131 CY @

2) Backfill : (70 + 57) = 127 CY

3) Pipe 24" ϕ, L = 47 L.FT

21" ϕ L = 362 L.FT

4) Conc. Qty ∴ = 33 CY

5) Reinf. Steel @ 80 lb/CY = 2640 lbs

Cost Summary

1) Excn. @ $5/- CY (131)	=	$ 655
2) Structure Backfill @ $12/- (127)	=	$ 1524
3) 24" ϕ pipe @ $45/- (47)	=	$ 2115
4) 21" ϕ pipe @ $40/- (362)	=	$ 14480
5) Conc @ $175/- (33)	=	$ 5775
6) Reinf. Steel @ 0.50 (2640)	=	$ 1320
		$ 25869
10% Contingencies		$ 2131
		$ 28000

6910-153 4-90

FLOOD CONTROL DISTRICT OF MARICOPA COUNTY

PROJECT Dysart Drain PAGE 3-A OF ____

DETAIL Collector Channel COMPUTED KVH DATE 8/94

Qtys & Cost CHECKED BY ____ DATE ____

Summary Qtys.

FINAL Qtys & Cost

1) EXCV^m: (42 + 56 + 45) = 143 CY

2) Backfill: (33 + 44 + 34) = 111 CY

3) Pipe 24" ϕ L = 47 L.ft

21" ϕ L = 214 L.ft

4) Conc, Class-A (Boxes) ~~24~~ 8 CY } ~~39~~ ~~45~~ CY
(Encasement) Class-B 11 CY
CLO's ~~4~~ 6 CY }

using an Av. of 100 lbs/CY = ~~39~~ ~~45~~ × 100 = 4500 ~~115~~

Cost Summary:

1) EXCV^m: 143 CY @ $5/- CY	=	$ 715
2) Structure Backfill: 111 CY @ $15/-	=	$ 1665
3) 24" ϕ pipe: 47 L.ft @ $50/-	=	$ 2350
		13455
4) 21" ϕ pipe: ~~299~~ 214 L.ft @ $45/-	=	$ ~~9630~~
		6825
* 5) Conc: ~~39~~ ~~45~~ CY @ $175/-		$ ~~7875~~
6) Reinf. Stcl 4500 lbs @ $0.50		$ 2250
		~~$ 27260~~
		$ ~~24485~~
15% ± Contingencies		~~3740~~ 3515
		$ ~~28000~~
		31,000

* Qty for CLO's = 4 CY is included in the 39 cyd

FLOOD CONTROL DISTRICT OF MARICOPA COUNTY

PROJECT Dysart Drain PAGE ____ OF ____

DETAIL Collector Channel COMPUTED KVH DATE 8/94

Qty's. CHECKED BY ____ DATE ____

	DESCRIPTION	UNIT	QUANTITY	
	Excavation	CY	143	
	Structural Backfill	CY	112	
	24" Dia. Pipe	L.Ft.	47	
	21" Dia. Pipe	L. Ft.	~~214~~	299
	Conc. Lined Ditch 2'-6" Deep	L. Ft	~~29.3~~	30
	Concrete Lined Ditch 2'-9" Deep	L. Ft	~~54.7~~	28
	Class "A" Concrete	CYD	~~28~~	24
	Class "B" Concrete	CYD	11 ✓	
	Reinf. Steel	lbs	4500 ✓	

TABLE OF QUANTITIES

Total Qty for CLD's = 4 CY. (Class-B Conc)

Qty for CLD 4 CY is not included in the 11 CY shown in the Table.

∴ CLD's are bid for L.Ft. basis

6810-153 4-90

FLOOD CONTROL DISTRICT OF MARICOPA COUNTY

PROJECT Dysart Drain PAGE 3-A OF

DETAIL Collector Chan COMPUTED KVH DATE 8/94

CHECKED BY DATE

FINAL Qtys

CLD

N&S CLD :-

$W = 6.8'$, $L = 27.33'$, $t = 3''$

$A_1 = 6.8 \times 27.33/9 = 20.7$ S.YD

Say 21 S.YD

Tail water Ditch:

$W = 6.4'$, $L = 29.33$, $t = 3''$

$A_2 = 6.4 \times 29.33/9 = 20.8$

Say = 21 SQ YD

Total 2-CLD = $21 \times 2 = 42$

$t = 3''$

Class-B. Concrete

Over All total 2-CLD & Tailwater. Dit

$= (42 + 21) = 63$ 63 S.Y

Eqt. of 63 SY $= (63 \times 9 \times \frac{3}{12})/27 = 6$ CY of CLD

If we want to use SYD for CLD.
use 63 S.YDs & Cut Down
45 CYd. of Conc to (45 - 6) = 39 CY

FLOOD CONTROL DISTRICT OF MARICOPA COUNTY

PROJECT Dysart Drain PAGE ___ OF ___

DETAIL Collector Channel COMPUTED KVH DATE 9/14

CHECKED BY ___ DATE ___

Revised Qtys Sept. 14/94

1) Conc. Encasement for 24" ϕ Tail. w. pipe
= 11 CY (Same as before)
Class-B Concrete = 11 CY — 11 CY

2) Qty per Box = 2 CY

No. of Equiv. Boxes = 12

Total Class A. Conc. = 24 — 24 CY

Pipe Lengths 2 - 21" ϕ

Lengths with no CLJ on N. Farm Rd.

S. Farm Rd. = 27 + (1'-4) = 28-4
(35'-10) + 8" + 1.0 = 37-6
65-10"

Total = (65-10) 2 = 131-8"

N. Farm Rd: 82 + (1-4) = 83-4

Total. = (83-4) 2 = 166-8"

over All Total Lengths (21" ϕ pipe)
= (131-8) + (166-8) = 298-4 — 298.33'

Check

Additional Lengths = (27-4) + (4-8) + (4-8) = 36-8
(36-8) 2 = 73-4
provision Lengths = (224'-4) - 73-4 = 297-8
Extra Length (297-8) + (4" x 2)
= 298-4" OK

6910-153 4-90

FLOOD CONTROL DISTRICT OF MARICOPA COUNTY

PROJECT Dysart Drain PAGE ____ OF ____

DETAIL Collector Channel COMPUTED ____ DATE ____

____ CHECKED BY ____ DATE ____

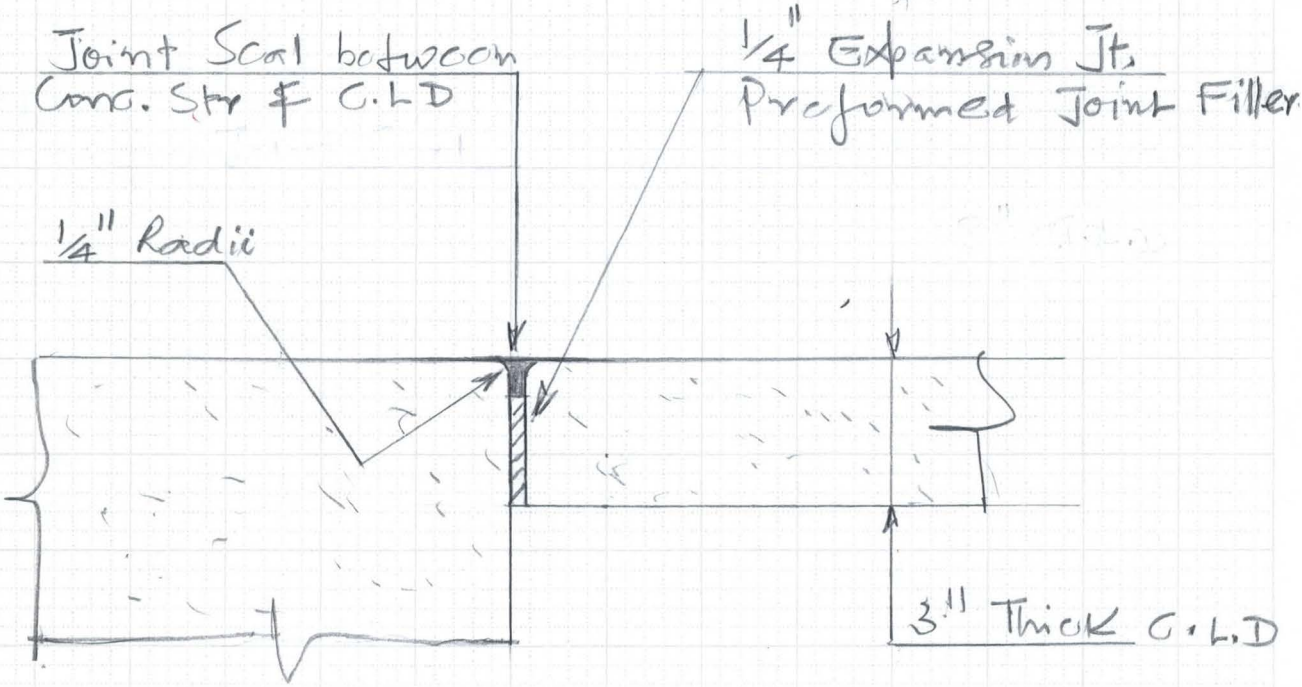

SECTION H-H

JOINT DETAIL (N.T.S)

CRSS

Urgent Material:	*YES*	*NO*
Reply Requested:	*YES*	*NO*

Original Document : Will be sent via Fed Exp./ US Mail/_____(other)
Will not be sent

FACSIMILE TRANSMISSION REQUEST FORM

Date:

Project/Charge No: _____

ADDRESSEE

NAME: Don Rerick

COMPANY: FCD

CITY/STATE: _____

FAX PHONE: 506-4601 REG. PHONE _____

PAGES (includes cover): 11

CC: _____

ADDITIONAL INSTRUCTIONS: Colter Channel Tailwater Flume.

ORIGINATOR

NAME: Jay Meacham

CRSS
4041 N. CENTRAL AVENUE, SUITE 650
PHOENIX, ARIZONA 85012-3306
PHONE: (602) 263-5309
FAX PHONE: (602) 263-8373

In case of transmission error, call: _____

TABLE OF CONTENTS

DESIGN ELEMENT	Designed By	Checked By	Page
CANAL CROSSING BOX CULVERTS	KF	OO	
Soil Pressures and Internal Forces			1
Channel Section Moment Strength			11
Channel Section Torsional Strength			21
Wall and Bottom Slab Forces and Design			24
Top Slab Model and Design			32
Top Slab Analysis Output			37
COLTER CHANNEL CROSSING HEADWALLS	KF	OO	
Internal Forces Analysis and Design			69
Torsion Capacity Check			71
FLUME PIPE, SUPPORT AND FOUNDATION DESIGN	KF	NJ	
Pipe Wall Thickness Design			75
Lateral Forces and Foundation Design			76
Saddle and Flange Connection Design			79
Shaft Structural Design			82

PROJECT: COLTER CHANNEL TAILWATER FLUME
DESIGNED BY: KF DATE: 6/93
CHECKED BY: [illegible] DATE: 7/93

ALPHA ENGINEERING GROUP INC.
2929 E CAMELBACK RD, #215
PHOENIX, AZ 85016

UNITS $kip \equiv 1000 \cdot lbf$ $deg \equiv \frac{\pi}{180} \cdot rad$ $TOL \equiv 0.1$

$plf \equiv \frac{lbf}{ft}$ $psf \equiv \frac{lbf}{ft^2}$ $psi \equiv \frac{lbf}{in^2}$ $pcf \equiv \frac{lbf}{ft^3}$ $pci \equiv \frac{lbf}{in^3}$ $pft \equiv lbf \cdot ft$ $pin \equiv lbf \cdot in$

$klf \equiv \frac{kip}{ft}$ $ksf \equiv \frac{kip}{ft^2}$ $ksi \equiv \frac{kip}{in^2}$ $kcf \equiv \frac{kip}{ft^3}$ $kci \equiv \frac{kip}{in^3}$ $kft \equiv kip \cdot ft$ $kin \equiv kip \cdot in$

INSIDE DIAMETER OF PIPE $d_i := 12 \cdot in$

THICKNESS OF PIPE WALL $t := 0.375 \cdot in$

SPAN LENGTH $L := 60 \cdot ft$

DENSITY OF WATER $\gamma_w := 62.4 \cdot pcf$

DENSITY OF STEEL $\gamma_s := 490 \cdot pcf$

INSIDE AREA OF PIPE $A(d) := \frac{\pi}{4} \cdot d^2$

CROSS SECTIONAL AREA OF PIPE $A_p(d) := \frac{\pi}{4} \cdot \left[(d + 2 \cdot t)^2 - d^2 \right]$

WEIGHT OF WATER (FULL) $W_w := \gamma_w \cdot A(d_i)$ $W_w = 49.01 \cdot plf$

WEIGHT OF PIPE $W_p := \gamma_s \cdot A_p(d_i)$ $W_p = 49.61 \cdot plf$

TOTAL FULL WEIGHT OF PIPE $W_{pf} := W_w + W_p$ $W_{pf} = 98.62 \cdot plf$

SECTION MODULUS OF PIPE $S_p := \pi \cdot \frac{\left[(d_i + 2 \cdot t)^4 - d_i^4 \right]}{32 \cdot (d_i + 2 \cdot t)}$

$S_p = 43.82 \cdot in^3$

MAX BENDING MOMENT AT SUPPORTS, FOUR CONTINUOUS EQUAL SPANS

$M_s := 0.1071 \cdot W_{pf} \cdot L^2$

$M_s = 38.023 \cdot kft$

STRESS $f_{ss} := \frac{M_s}{S_p}$ $f_{ss} = 10.41 \cdot ksi$

MAX BENDING MOMENT IN END SPAN, FOUR CONTINUOUS EQUAL SPANS

$M_m := 0.0772 \cdot W_{pf} \cdot L^2$

$M_m = 27.408 \cdot kft$

STRESS $f_{sm} := \frac{M_m}{S_p}$ $f_{sm} = 7.51 \cdot ksi$

PROJECT: COLTER CHANNEL TAILWATER FLUME
DESIGNED BY: KG DATE: 6/93
CHECKED BY: DATE: 7/93

ALPHA ENGINEERING GROUP INC.
2929 E CAMELBACK RD, #215
PHOENIX, AZ 85016

ELASTIC MODULUS OF STEEL $E_s := 29000 \cdot ksi$ $E_s = 2.9 \cdot$

SECOND MOMENT OF AREA OF PIPE

$$I_p := \pi \cdot \frac{\left[(d_i + 2 \cdot t)^4 - d_i^4 \right]}{64}$$

$I_p = 279.34 \cdot in^4$

MAXIMUM DEFLECTION IN END SPAN

$$\delta_\mu := 0.0065 \cdot W_{pf} \cdot \frac{L^4}{E_s \cdot I_p} \qquad \delta_\mu = 1.77 \cdot in$$

RECOMMENDED LIMIT ON DEFLECTION

$$\delta_\lambda := \frac{L}{360} \qquad \delta_\lambda = 2 \cdot in$$

(IT SHOULD BE NOTED THAT AS THE PIPE DRAINS, THE LOAD DECREASES TO THE PIPE WEIGHT ONLY)

DEFLECTION UNDER PIPE WEIGHT ONLY

$$\delta_\pi := 0.0065 \cdot W_p \cdot \frac{L^4}{E_s \cdot I_p} \qquad \delta_\pi = 0.89 \cdot in$$

SLOPE OF PIPE

$SL := 0.0755 \cdot \%$ $SL \cdot 0.440 \cdot L = 0.24 \cdot in$

CONCLUSION: SOME WATER WILL REMAIN IN PIPE, BUT MAY BE EXPECTED TO EVAPORATE RAPIDLY DUE TO SOLAR HEATING OF THE PIPE

MAXIMUM REACTION AT FIRST SUPPORT

$R_s := 1.143 \cdot W_{pf} \cdot L$ $R_s = 6.76 \cdot kip$

THE REACTION OF THE PIPE IS NOT SIGNIFICANT ENOUGH TO WARRENT AXIAL LOAD DESIGN OF THE FOUNDATION CAPACITY OF THE SOIL, PER SHB-AGRA GEOTECHNICAL REPORT DATED NOVEMBER 24, 1992, THE SAFE AXIAL CAPACITY OF AN 18" SHAFT WITH 10' OF EMBEDDMENT IS 65 KIPS. THIS IS WELL IN EXCESS OF THE CALCULATED REACTION.

LATERAL FORCES EVALUATION
==========

LATERAL FORCE ON PIPE $F_l := 3 \cdot \gamma_\omega \cdot (d_i + 2 \cdot t) \cdot ft$

MAX LATERAL FORCE ON TOP OF PILE $P_t := 1.143 \cdot F_l \cdot L$

$P_t = 13.64 \cdot kip$

FORCES ON A SUBMERGED PIPE
==========

THE DRAG COEFFICIENT MAY BE TAKEN AS 1.2 FOR A CIRCULAR PIPE

$C_D := 1.2$ $g = 32.17 \cdot \frac{ft}{sec^2}$

ASSUMED MAXIMUM VELOCITY OF FLOW IN CHANNEL $V := 5.0 \cdot \frac{ft}{sec}$

PRESSURE ON PIPE $p_q := C_D \cdot \gamma_\omega \cdot \frac{V^2}{2 \cdot g} + \gamma_\omega \cdot \left(\frac{d_i}{2} + t \right)$ $p_q = 62.24 \cdot psf$

FORCE PER LINEAL FOOT $W_q := p_q \cdot (d_i + 2 \cdot t)$ $W_q = 66.13 \cdot plf$

$P_t := 1.143 \cdot W_q \cdot L$ $P_t = 4.54 \cdot kip$

PROJECT: COLTER CHANNEL TAILWATER FLUME
DESIGNED BY: EE DATE: 6/14/93
CHECKED BY: [illegible] DATE: 7/93

ALPHA ENGINEERING GROUP INC.
2929 E CAMELBACK RD, #215
PHOENIX, AZ 85016

6/14/93 Per CRSS revision to Scour = 5'

LATERAL FORCE LOAD FACTOR $LFLF := 2.5$

ULTIMATE LATERAL FORCE $P_{ult} := LFLF \cdot P_t$

$P_{ult} = 11.34 \cdot kip$

CENTER OF PIPE ELEVATION AT SUPPORT

$$CP_{el} := 1024.7 \cdot ft - (121 - 48) \cdot ft \cdot SL + \frac{d_i}{2} \qquad CP_{el} = 1025.14 \cdot ft$$

CHANNEL INVERT ELEVATION $INV_{el} := 1021.5 \cdot ft$

ANTICIPATED SCOUR DEPTH $SCOUR := 5 \cdot ft$

CENTER OF PIPE TO MUDLINE $e := CP_{el} - INV_{el} + SCOUR$

$e = 8.64 \cdot ft$

MOMENT AT MUDLINE (THE LATERAL FORCE ON THE PILE IS NOT SIGNIFICANT)

$M_1 := P_t \cdot e \qquad M_1 = 39.21 \cdot kft$

PER THE GEOTECHNICAL REPORT, THE LATERAL PASSIVE RESISTANCE (ULTIMATE BEARING PRESSURE) OF THE SOIL TO LATERAL FORCES ON THE PILE SHOULD BE CONSIDERED EQUAL TO THE FORCES EXERTED BY AN EQUIVALENT FLUID PRESSURE OF 900pcf. THE RECOMMENDED FACTOR OF SAFETY IS 2.5. A BRIEF APPLICATION OF THIS USING BROMS' METHOD MAY BE FOUND IN "DRILLED SHAFTS: CONSTRUCTION PROCEEDURES AND DESIGN METHODS", FHWA-HI-88-042, ON PAGES 321 TO 326 FOR SHAFTS IN COHESIONLESS SOIL.

PILE DIAMETER $d_p := 18 \cdot in$ Note: maximum moment in pile is not sensitive to pile diameter. Also, pile diameter has been revised to 24".

EQUIVALENT FLUID PRESSURE $EFP := 900 \cdot pcf$

ULTIMATE RESISTANCE FORCE AT A DEPTH Z $P(z) := EFP \cdot d_p \cdot z$

ESTIMATED PILE LENGTH BELOW CHANNEL INVERT $L_c := 20 \cdot ft$

PILE EMBEDDMENT LESS SCOUR $L_1 := L_c - SCOUR \qquad L_1 = 15 \cdot ft$

$P(L_1) = 20250 \cdot plf$

GIVEN

TAKING MOMENTS ABOUT PILE TIP, EQUAL TO ZERO, AND SOLVING FOR L.1

$$P_{ult} \cdot (e + L_1) = (EFP \cdot d_p \cdot L_1) \cdot \left(\frac{1}{2} \cdot L_1\right) \cdot \left(\frac{1}{3} \cdot L_1\right) \qquad L_1 > 0 \cdot ft$$

$L_{12} := \text{find}(L_1)$

REQUIRED EMBEDDMENT BELOW SCOUR $L_{12} = 9.75 \cdot ft$

REQUIRED PILE LENGTH BELOW INVERT $L_c := L_{12} + SCOUR$ $= (9.75 + 5) = 14.75'$

$L_c = 14.75 \cdot ft$ SELECTED PILE LENGTH $L_c := 12 \cdot ft$

TOTAL PILE LENGTH $L_p := e + L_{12} \qquad L_p = 18.4 \cdot ft$ $= (8.64 + 9.75) = 18.4$

DEPTH TO MAXIMUM PILE MOMENT AT POINT OF ZERO SHEAR, BELOW SCOUR LEVEL

$$f := \sqrt{\frac{2 \cdot P_{ult}}{EFP \cdot d_p}} \qquad f = 4.1 \cdot ft$$

MAXIMUM PILE MOMENT AT f $M_f := P_{ult} \cdot (e + f) - (EFP \cdot d_p \cdot f) \cdot \left(\frac{1}{2} \cdot f\right) \cdot \left(\frac{1}{3} \cdot f\right)$

$M_f = 129 \cdot kft$

PROJECT: COLTER CHANNEL TAILWATER FLUME
DESIGNED BY: LF / DATE: 6/14/93
CHECKED BY: [illegible] DATE: 7/93

ALPHA ENGINEERING GROUP INC.
2929 E CAMELBACK RD, #215
PHOENIX, AZ 85016

6/14/93
PER CRSS
REVISION TO
Scour = 5'

NUMBER OF PILE SECTIONS $n := 50$

VARIABLE OF LENGTH $i := 0, 1 .. n$ $\quad x_i := i \cdot \frac{L_p}{n}$

SHEAR ALONG PILE $V(x) := P_{ult} - \int_e^x P(x - e)\, dx \cdot (x \geq e)$

MOMENT ALONG PILE $M(x) := \int_{0 \cdot ft}^x V(x)\, dx$

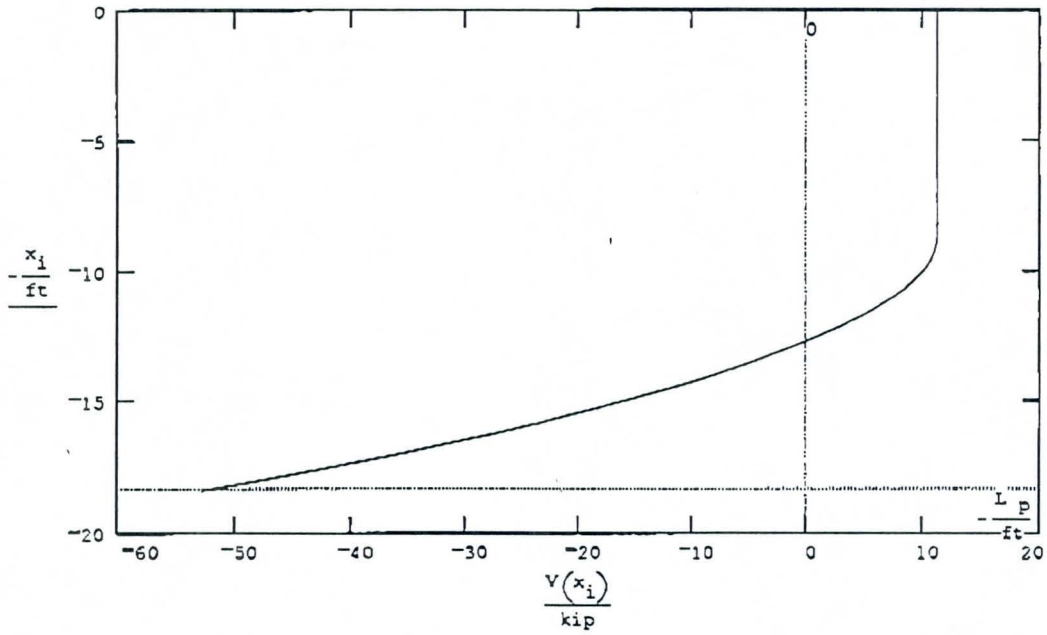

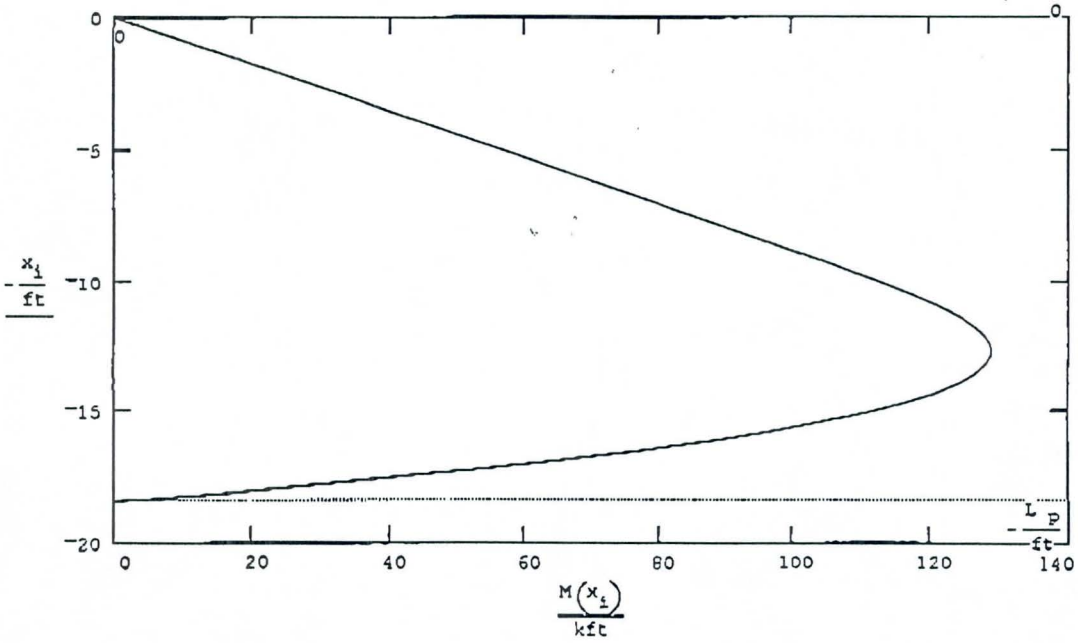

PROJECT: COLTER CHANNEL TAILWATER FLUME
DESIGNED BY: KF DATE: 6/93
CHECKED BY: AM DATE: 7/93

ALPHA ENGINEERING GROUP INC.
2929 E CAMELBACK RD, #215
PHOENIX, AZ 85016

STRESSES AT SADDLE SUPPORT

FROM "TUBULAR STEEL STRUCTURES - THEORY AND DESIGN" BY TROITSKY, THE TOTAL STRESS IS THE SUM OF THE BENDING STRESS PLUS A CONSERVATIVELY CALCULATED LOCAL STRESS AT THE SUPPORT SADDLE TIPS (AFTER ROARK).

TOTAL SADDLE REACTION $R_s = 6.76 \cdot kip$

PIPE RADIUS

$$R := \left(d_i + t\right) \cdot \frac{1}{2} \qquad R = 6.19 \cdot in$$

SUBTENDED ANGLE OF SADDLE IN DEGREES $\alpha := 120 \cdot deg$

FACTOR CONSIDERING ALPHA

$K := 0.02 - 0.00012 \cdot (\alpha - 90 \cdot deg)$ $K = 0.019937$

STRESS FROM SADDLE $f_1 := K \cdot \frac{R_s}{t^2} \cdot \ln\left(\frac{R}{t}\right)$ $f_1 = 2688.02 \cdot psi$

STRESS FROM SADDLE PLUS BENDING STRESS

$f_{tot} := f_{ss} + f_1$ $f_{tot} = 13101.2 \cdot psi$

FLANGE CONNECTION DESIGN

THE BOLT CIRCLE DIAMETER IS ASSUMED TO BE AT THE AVERAGE OF THE INSIDE AND OUTSIDE DIAMETERS OF THE FLANGE

FLANGE INSIDE DIAMETER $d_{fi} := \left(d_i + 2 \cdot t\right)$ $d_{fi} = 12.75 \cdot in$

TOTAL WIDTH OF FLANGE $w_f := 3.5 \cdot in$

FLANGE OUTSIDE DIAMETER $d_{fo} := d_{fi} + 2 \cdot w_f$ $d_{fo} = 19.75 \cdot in$

FLANGE CONTACT AREA

$$A_f := \frac{\pi}{4} \cdot \left(d_{fo}^2 - d_{fi}^2\right) \qquad A_f = 178.68 \cdot in^2$$

FLANGE CONTACT AREA SECTION MODULUS, SECOND MOMENT OF AREA

$$S_f := \pi \cdot \frac{\left(d_{fo}^4 - d_{fi}^4\right)}{32 \cdot d_{fo}} \qquad S_f = 624.95 \cdot in^3$$

$$I_f := \pi \cdot \frac{\left(d_{fo}^4 - d_{fi}^4\right)}{64} \qquad I_f = 6171.37 \cdot in^4$$

BOLT CIRCLE DIAMETER AND RADIUS

$$d_{bc} := \frac{d_{fi} + d_{fo}}{2} \qquad d_{bc} = 16.25 \cdot in \qquad d_{bc} := 16 \cdot in$$

$$r_{bc} := \frac{1}{2} \cdot d_{bc} \qquad r_{bc} = 8 \cdot in$$

PROJECT: COLTER CHANNEL TAILWATER FLUME
DESIGNED BY: LE DATE: 6/93
CHECKED BY: DATE: 7/93

ALPHA ENGINEERING GROUP INC.
2929 E CAMELBACK RD, #215
PHOENIX, AZ 85016

NUMBER OF BOLTS $n_b := 12$

BOLT DIAMETER, AREA $D_b := \frac{7}{8}\cdot in$ $A_b := \pi\cdot\frac{D_b^2}{4}$

$A_b = 0.6\cdot in^2$ $A_{bg} := n_b\cdot A_b$ $A_{bg} = 7.22\cdot in^2$

BOLT SPACING $s_b := \pi\cdot\frac{d_{bc}}{n_b}$ $s_b = 4.19\cdot in$

PRETENSION STRESS, FORCE PER BOLT $f_{pt} := \frac{4}{\pi}\cdot\frac{1}{in^2}\cdot 51\cdot kip$

$f_{pt} = 64.94\cdot ksi$ $F_{pt} := A_b\cdot f_{pt}$ $F_{pt} = 39.05\cdot kip$

FLANGE CONTACT PRESSURE $p_{fc} := \frac{n_b\cdot F_{pt}}{A_f}$ $p_{fc} = 2622.38\cdot psi$

MOMENT CAPACITY AT ZERO PRESSURE AT TENSION EDGE OF FLANGE

$M_{zf} := p_{fc}\cdot S_f$ $M_{zf} = 136.57\cdot kft$ $M_s = 38.02\cdot kft$

CONCLUSION: FLANGE CONTACT FACE SHOULD REMAIN IN COMPRESSION, DESIGN CONSIDERING PRETENSION (SEE SALMON AND JOHNSON, "STEEL STRUCTURES DESIGN AND BEHAVIOR", 3RD ED, PAGES 183 AND FOLLOWING). ALSO IT SHOULD BE NOTED THAT SHEAR FORCES ARE INSIGNIFICANT FOR THIS CONNECTION. FOLLOWING IS A CHECK OF ALLOWABLE MOMENT CAPACITY OF THE CONNECTION NEGLECTING PRETENSION.

BOLT GROUP MOMENT OF INERTIA $j := 0,1\ldots(n_b - 1)$

$\beta_j := \frac{360\cdot deg}{n_b}\cdot(j + 0.5)$ $y_j := r_{bc}\cdot\cos(\beta_j)$

$I_{bg} := A_b\cdot\sum_j (y_j)^2$ $I_{bg} = 230.91\cdot in^4$

MAX MOMENT (APPROXIMATELY) AT ALLOWABLE STRESS

$F_t := 44\cdot ksi$ $M_{all} := F_t\cdot\frac{I_{bg}}{r_{bc}}$ $M_{all} = 105.83\cdot kft$

$M_s = 38.02\cdot kft$ $\frac{M_{all}}{M_s} = 2.78$

THE ALLOWABLE MOMENT ON THE BOLT GROUP IS GREATER THAN THE ALLOWABLE MOMENT ON THE PIPE ALONE.

PROJECT: COLTER CHANNEL TAILWATER FLUME
DESIGNED BY: KP DATE: 6/93
CHECKED BY: [illegible] DATE: 7/93

ALPHA ENGINEERING GROUP INC.
2929 E CAMELBACK RD, #215
PHOENIX, AZ 85016

FORCES AT Flange WELDS $F_{yp} := 35 \cdot ksi$

COMPACT SECTION CRITERIA $\frac{(d_i + 2 \cdot t)}{t} = 34$ $\frac{3300 \cdot ksi}{F_{yp}} = 94.29$

D/t <= 3300/Fy

$f_p := 0.66 \cdot F_{yp}$ $f_p = 23.1 \cdot ksi$

ALLOWABLE MOMENT ON PIPE $M_p := s_p \cdot f_p$ $M_p = 84.35 \cdot kft$

FORCE ON WELDS FOR FULL PIPE CAPACITY, PER INCH

$P_w := t \cdot f_p \cdot (1 \cdot in)$ $P_w = 8.66 \cdot kip$

BY COMPARISON WITH VALUES IN SALMON AND JOHNSON (ABOVE) TABLES 5.15.2 AND 5.15.3 THE WELD CAPACITY FOR A SINGLE 5/16" WELD WITH F.E70 ELECTRODES IS AT LEAST 4.64 KIPS PER INCH. TWO WELDS GIVES AN ALLOWABLE CAPACITY OF 9.28 KIPS PER INCH, VERIFIED BELOW.

NOMINAL WELD SIZE $t_w := \frac{5}{16} \cdot in$

EFFECTIVE THROAT $t_{we} := \frac{t_w}{\sqrt{2}}$ $t_{we} = 0.22 \cdot in$

WELD STRENGTH $F_{EXX} := 70 \cdot ksi$

WELD RESISTANCE CAPACITY $R_w := 0.30 \cdot F_{EXX} \cdot t_{we}$ $R_w = 4.64 \cdot \frac{kip}{in}$

EFFECTIVE LENGTH $L_{eff} := 2 \cdot in$

WELD TOTAL RESISTANCE $R_{wtot} := R_w \cdot L_{eff}$ $R_{wtot} = 9.28 \cdot kip$

BASE METAL CAPACITY $R_{btot} := 0.60 \cdot F_{yp} \cdot t_w \cdot L_{eff}$ $R_{btot} = 13.13 \cdot kip$

THERMAL GRADIENT MOMENTS IN PIPE $\alpha_s := 0.0000065 \cdot \frac{1}{deg}$

THE THERMAL GRADIENTS WILL PROBABLY BE GREATEST IN MID-SUMMER OR WINTER. SOLAR HEATING OF THE TOP OF THE PIPE COMBINED WITH THE COOLING EFFECTS OF A MILD WIND, OR ESPECIALLY A SMALL AMOUNT OF WATER FLOWING THROUGH THE PIPE WILL CAUSE THERMAL GRADIENTS. THE ASSUMED GRADIENT IS 30 DEGREES FARHENHEIT.

THERMAL DIFFERENTIAL $\delta_t := 30 \cdot deg$

CURVATURE DUE TO LINEAR GRADIENT $\phi_t := \frac{\delta_t \cdot \alpha_s}{(d_i + 2 \cdot t)}$ $\phi_t = 0.000184 \cdot length^{-1}$

FIXED END MOMENT DUE TO CURVATURE $M_t := \phi_t \cdot E_s \cdot I_p$

$M_t = 10.32 \cdot kft$ AT FIRST SUPPORT FROM END $1.286 \cdot M_t = 13.28 \cdot kft$

AT INTERIOR SUPPORT $0.857 \cdot M_t = 8.85 \cdot kft$

Per CRSS Revision to Scour = 5'

PROJECT: COLTER CHANNEL
DESIGNED BY: [illegible] DATE 6/14/93
CHECKED BY: [illegible] DATE 7/93

DIAMETER: $2 \cdot R = 24$

STEEL RADIUS: $2 \cdot rb = 12.25$

STEEL AREA: $AS := \sum_r Ab_r$ $AS = 4.8 \cdot in^2$

TOTAL FORCE AND MOMENT FOR EACH STRAIN POSITION q:

$TCF_q := \sum_c CF_{q,c}$ $TCMNA_q := \sum_c CMNA_{q,c}$

TOTAL FORCE AND MOMENT, CONCRETE PLUS REINFORCING:

$TF := TCF + TRF$ $TMNA := TCMNA + TRMNA$ $\max(TMNA) = 271.635 \cdot kft$

BEAMMOM := linterp(TF, TMNA, 0·kip)

BEAMMOM=inckftsing

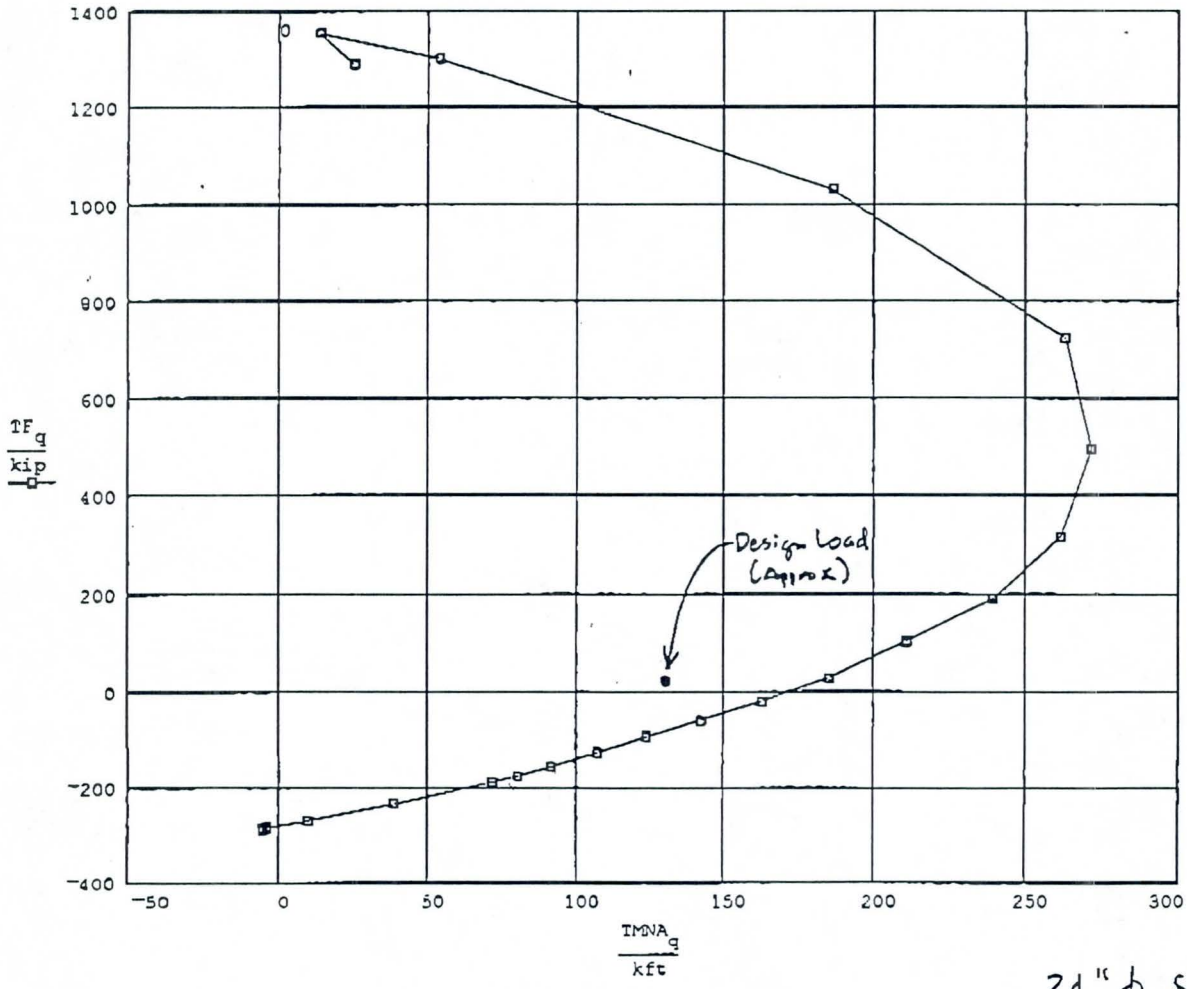

24" ϕ Shaft
5" clr Cover to Spiral
8 #7 Vert.

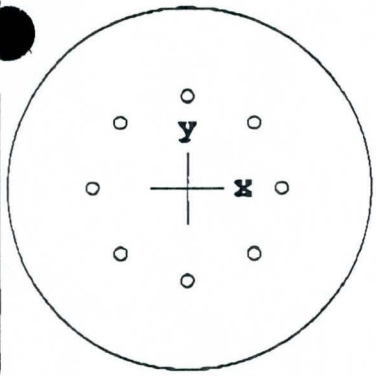

24.0 inch diam.

f'_c = 3.5 ksi
f_y = 60.0 ksi
Confinement:Spiral
clr cvr = 5.38 in
spacing = 3.86 in
8#7 at 1.1%
A_s = 4.80 in^2
I_x = 16286 in^4
I_y = 16286 in^4
$\bar{x}$ = 0.00 in
$\bar{y}$ = 0.00 in

(c 1992 PCA

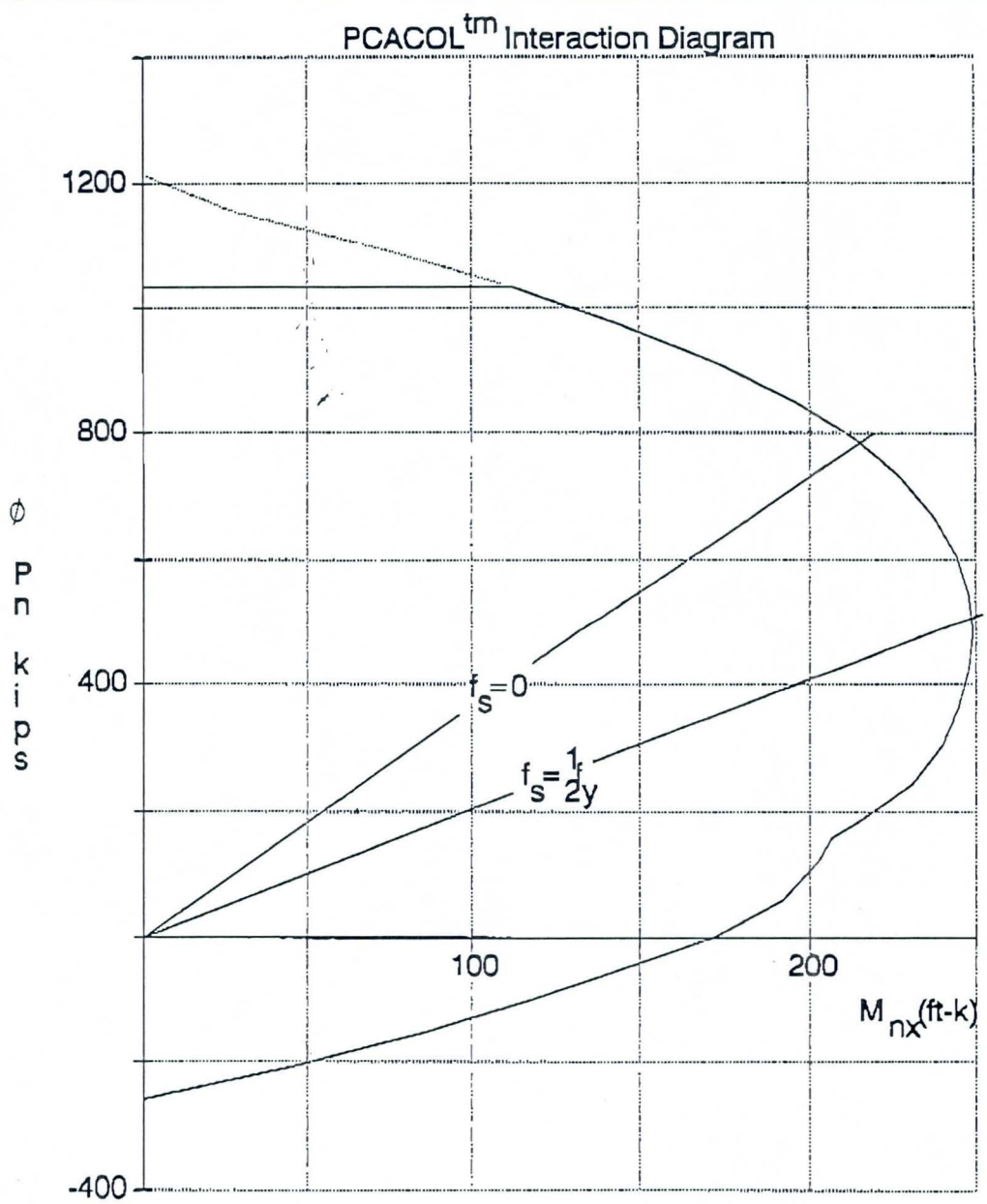

Licensed To: CRSS, Civil Engineers Inc., PHOENIX, ARIZONA

Project: COLTER CHANNEL FLUME
Column Id: DRILLED SHAFTS
Engineer: NIKPOUR
Date: 06/14/93 Time: 10:02:04
Code: ACI 318-89
Version: 2.20

File name: UNTITLED.COL
Material Properties:
E_c = 3587 ksi $_u$ = 0.003 in/in
f_c = 2.97 ksi E_s = 29000 ksi
$_1$ = 0.85
Stress Profile : Block
Reduction: $_c$ = 0.75 $_b$ = 0.90

Slenderness not considered x-axis

FLOOD CONTROL DISTRICT OF MARICOPA COUNTY

PROJECT _____ PAGE 1 OF _____

DETAIL _____ COMPUTED _____ DATE _____

_____ CHECKED BY _____ DATE _____

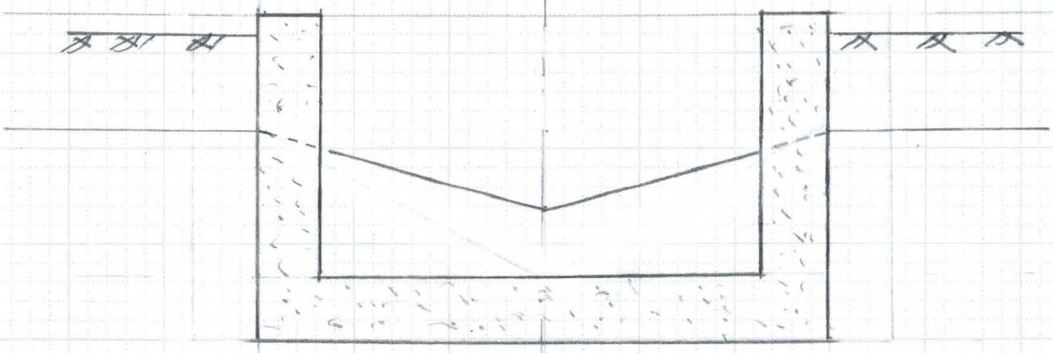

Section 1-1

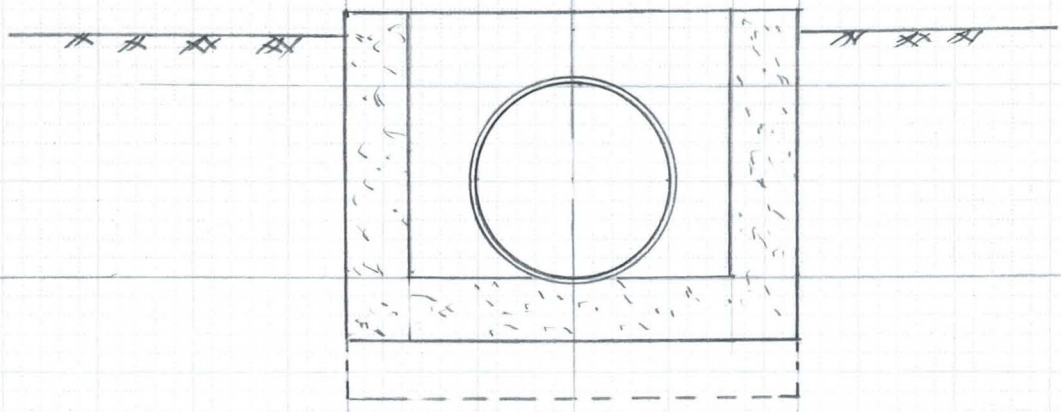

Section 2-2

FLOOD CONTROL DISTRICT OF MARICOPA COUNTY

PROJECT _____ PAGE 2 OF _____

DETAIL _____ COMPUTED _____ DATE _____

_____ CHECKED BY _____ DATE _____

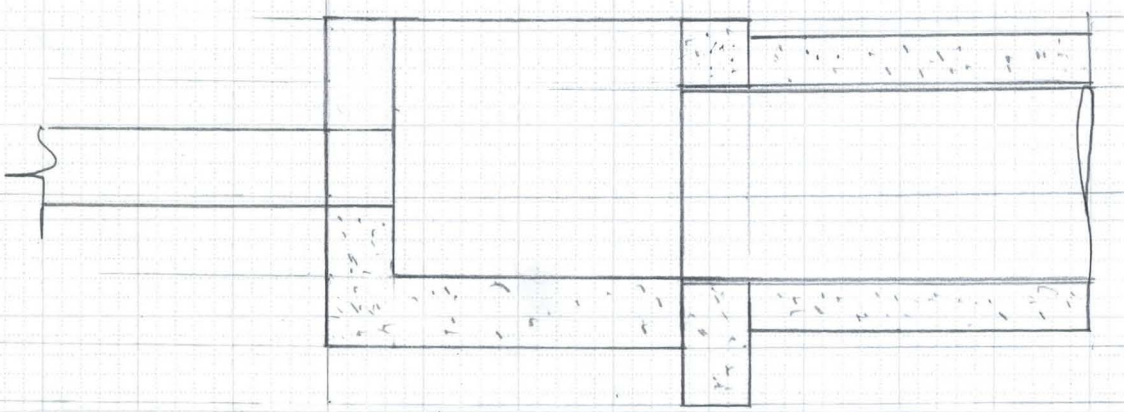

Section 3-3

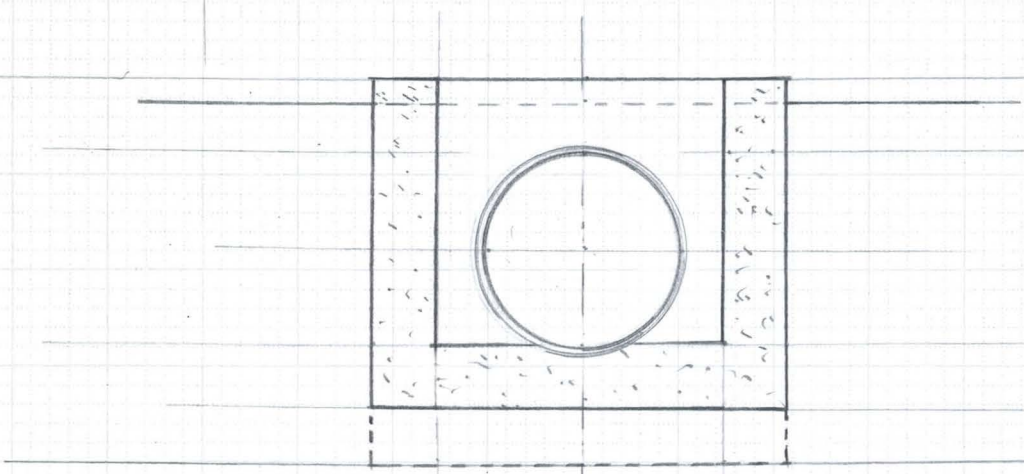

Section 4-4

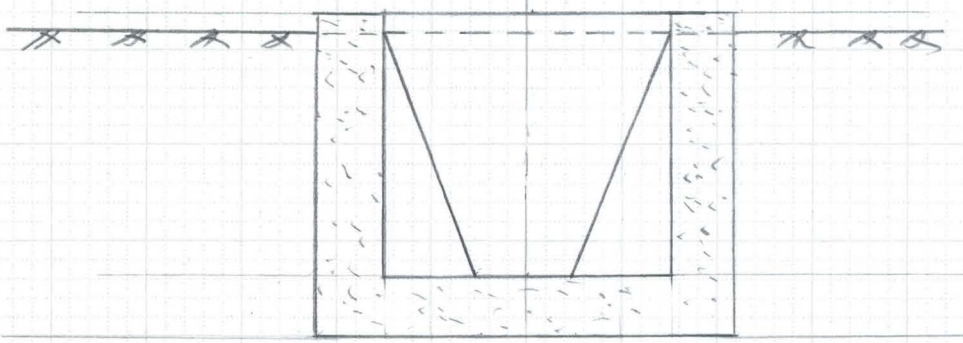

Section 5-5

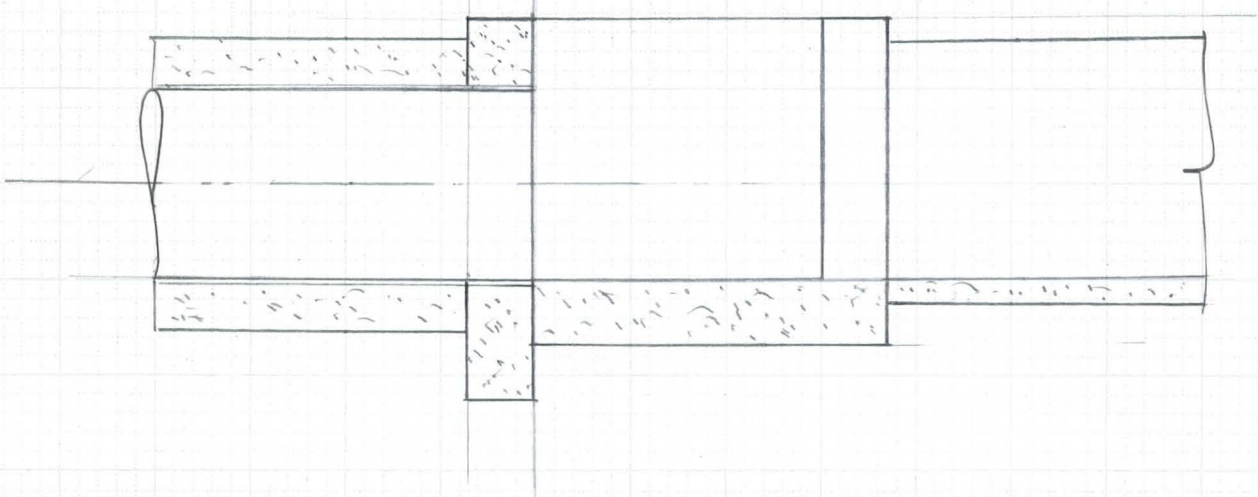

Section 6-6