Draft

WHITE TANKS #3

DECLINING ELEVATIONS ALONG

DAM CREST

Property of
Flood Control District of MC Library
Please Return to
2801 W. Durango
Phoenix, AZ 85009

Report of Investigator
May 17, 1991

CONTENTS

I. Authority

II. Objective

III. Summary of Findings

A. 1978 Report on cracking at Earth Dams
B. 1979 Crack Location Investigation
C. 1981 Phase I Inspection
D. Repair Work Accomplished
E. Discovery of Declining Elevation of Dam Crest
F. Subsidence Monuments
G. Updated Hydrologic/Hydraulic Analysis
H. This Study

IV. Subsidence in Area of Dam

V. Differential Elevation of Dam Crest

A. Discovery

B. Possible Causes

1. Initial Construction Error
2. Consolidation of Dam Fill
3. Consolidation of Alluvial Foundation Material Under The Dam
4. General Subsidence Caused by Mining of Groundwater

C. Subsidence Analysis

VI. Subsidence Related to Cracking

VII. Updated Hydrologic/Hydraulic Analysis

VIII. Additional Information Needed

A. Short Term

B. Long Term

IX. Design Problems

X. Existing Right-of-Way

XI. Recommendation for Repair

A. Determine Existing Conditions

B. Estimate Future Subsidence

C. Verify Hydrologic/Hydraulic Conditions

D. Design Repair Works.

WHITE TANKS NO.3

DECLINE IN CREST ELEVATION

I. AUTHORITY

An investigation was ordered by the Arizona State Conservationist on February 6, 1991 to study the cause of differential elevations along the crest of White Tanks #3 flood retarding structure. The investigator appointed was William A. McFerrin, Civil Engineer with the Flood Control District of Maricopa County, assigned as design engineer for SCS (see Appendix A).

Specifically, the duties include an engineering investigation to determine the facts and prepare a report to document the findings. A report of "Preliminary Findings" was prepared to organize the relative documents and information for developing this report.

II. OBJECTIVES

The basic purpose of the study is to determine the cause of differential elevation of over 3.5 ft. in 1991, along the dam crest, with the lowest point being 4.4 ft. below design elevation.
It is also necessary to assess the potential problems which could result from the anomaly, and discuss methods of resolving them.

In connection with potential repairs, the existence and ownership of right-of-way around the site is to be reviewed. Right-of-way will be needed to provide access and construction/borrow sites as determined through the design procedure.

III. SUMMARY OF FINDINGS

A. 1978 Report on Cracking of Earth Dams

An investigating team was appointed to study cracking of earth dams in Arizona. They presented an interim report on July 21, 1977 and a final report on April 27, 1978 (Sterns et al). The 1978 report contained the following observations:

1. Under VII. Causes of Cracking

   Certainly, the movement associated with subsidence as a result of ground water removal may well have aggravated the cracking in some areas. No evidence has been collected to indicate that subsidence cracks occur in any of the dams' foundations.

2. Under VIII. Summary of Findings

   A. The principal cause of the transverse cracking is tension released because of shrinkage as the embankments dry from placement moisture content in the severely hot, arid climatic conditions in the area.

   B. Secondary causes of cracking are:

      1. Tension zones resulting from differential settlement because of shallow foundation compression. This is the primary cause of the longitudinal cracks investigated.

2. Tension zones resulting from stress differences caused by regional subsidence associated with groundwater withdrawal.

3. Tension zones caused by stress differences resulting from variations in type of material, degree of compaction of moisture content in fill materials as placed.

4. Stresses induced by tremors and earthquakes.

The report also discussed the effect of subsidence on dams, together with planning and design concepts to prevent cracking. A system of monuments was recommended to monitor movements of dams in subsiding areas.

B. <u>1979 Crack Location Investigation</u>

Fugro, Inc., Consulting Engineers and Geologists, under contract to SCS, performed a crack location investigation (Fugro, Inc.,1979) on White Tanks #3. The work included digging with trencher and backhoe to locate and assess cracks. The findings, dated April 16, 1979 were as follows:

4.1 Conclusions

a. The maximum depth of cracking below crest grade is eight feet as determined by Ditch Witch trenching and flooding.

b. The deepest crack in the backhoe trenches extends to 21.9 feet.

c. The dominant mode of cracking is of the transverse type, however, a single longitudinal crack was observed from Station 25+36 to 26+18.

d. "Healing" or filling of cracks has occurred along some of the cracks investigated in the backhoe trenches. The filling material is most commonly loose, fine to coarse, well sorted sand.

e. Six pipe outlets were observed to discharge water as a result of Ditch Witch trench flooding.

f. Two reaches of severe cracking were encountered. One is from Station 28+50 to 29+00 and the other is from Station 57+90 to 58+40 (see Appendix C).

g. No cracking was encountered from Station 0+00 to 13+30 and from Station 69+65 to the end of structure 76+67.

h. Based upon our investigation, it is estimated that 60 percent of the FRS has experienced no cracking to date, 34 percent has a low degree of cracking and six percent has a moderate to severe degree of cracking.

i. White Tanks No. 3 FRS will require the implementation of remedial action to mitigate the potential problems due to cracking and piping of the embankment."

Subsequent to receiving the Fugro report, Stanley N. Hobson, Head, Engineering Staff, WNTC, sent a memorandum dated June 20, 1979 to Ralph Arrington, State Conservation Engineer, with the following recommendations regarding White Tanks No. 3 repair design (see Appendix B).

"White Tanks No. 3 (White Tanks Watershed)

The pattern of cracking at this site departs significantly from The pattern at the other sites. We are particularly concerned about the deep crack at Station 58+50. It is recommended that the original geology and other investigations data be studied to see if this crack may be explained by discontinuities in the foundation. It may be necessary to do more investigations to better define the cause of this deep crack. Seismic study may be helpful. Borings to check foundation conditions may be required.

We believe it necessary to know more about the cause of this crack before a design of corrective measures is completed."

C. 1981 Phase I Inspection

Ertec Western, Inc. (1981) was contracted by the Arizona Department of Water Resources to perform a phase I inspection under the authority of the National Dam Inspection Act. The following Section 6.0. Conclusions and Recommendations is from the inspection report:

Corps of Engineers guidelines indicate that White Tanks Retarding Dam No. 3 is a high hazard dam because of downstream development; storage criteria indicate that it is intermediate in size. Because of the high hazard and intermediate size classification, the guidelines also indicate that the emergency spillway should have the capability to safely pass the PMF. Results of this investigation indicate that the spillway can only accommodate 60 percent of the PMF, and the dam would experience a maximum overtopping across the entire dam crest of up to 1.12 feet for approximately 1.25 hours, during a PMF. It is probable that the dam would fail in the event of such overtopping. Results of the existing data evaluation indicate the internal structural integrity is also questionable because of embankment cracking known to affect the structure.

Results of this Phase I inspection and technical evaluation indicate corrective actions must be implemented during regular maintenance of the structure and that Phase II studies must be implemented to evaluate and ultimately correct apparent hydraulic

and structural deficiencies. Specific recommendations are as follows:

1. The dam and emergency spillways should be fenced to prevent trail bikes and off-road vehicles from using them as a playground.

2. Because of the known embankment cracking inadequate emergency spillway, a warning system and evacuation plan should be developed and implemented in the event of a possible dam failure.

3. Brush and sediment deposition should be cleaned from the outlet structures.

4. The dam embankment should be inspected at least annually to observe the occurrence of embankment cracking.

5. The population of burrowing animals on the embankment should be controlled by either periodically grading the surface to fill in burrows, or by covering the slope surfaces with a rock or gravel blanket (see report in Appendix D).

6. Plans for any remedial construction should be reviewed with respect to the existing geotechnical conditions.

7. The crest of the dam should be traversed by a level survey to determine the magnitude, if any, of any settlement since completion of construction. This should consist of determining ground surface elevations along the center of the crest at 20-foot intervals.

8. A Phase II investigation should be completed to further evaluate the embankment and foundation conditions and their stability, to characterize the cause(s) of recent cracking, and to provide a plan of action to correct the deficiencies in the embankment. Results of the level survey should be used to re-evaluate adequacy of the spillway, and means for modifying the spillway to accommodate the PMF should be investigated.

D. Repair Works Accomplished

The dam was repaired in 1982. The project design report described the work as follows:

The project consists of the removal of 200 feet of embankment at Station 58+00 and replacement to its original exterior dimensions. An embankment drain shall be excavated along the centerline at Stations 18+00, and 42+00, for 200 feet each to depths of 7.5, 12.0, and 10.0 feet respectively. Each trench shall be excavated approximately three (3) feet below the maximum depth of crack observed as recommended. Each

trench shall be graded to its individual outlet. The trenches and outlets shall be filled with well-graded drain fill material of maximum size passing the 1-1/2 inch sieve.

E. Discovery of Decreasing Elevation of Dam Crest

During the construction of repair works in 1982 an apparent anomaly was found in the elevation of the crest. A survey was ordered and a differential elevation problem was confirmed. Elevations were taken at 250' intervals. The lowest elevation recorded was 1213.5 at Station 10+00, while the highest was 1216.9 at Station 75+00. The maximum differential settlement measured was 3.4 feet. The as-built dam elevaton was 1216.

F. Subsidence Monuments

A system of subsidence monuments was established in 1984. Seven bench marks were placed at 1000 ft. spacing from Station 10+00 to 70+00 along the centerline of the dam. They were numbered A-1 through A-7. Correspondingly, seven existing benchmarks located at the downstream toe of slope, with the same stationing, were numbered B-1 through B-7.

Surveys of the monuments were conducted in 1984, 1986, 1990 and 1991. The "B" monuments were also surveyed in 1982.

G. Updated Hydrologic/Hydraulic Analysis

In 1981 Ertec performed the hydrologic investigation of white Tanks No. 3, described hereinbefore in paragraph C. In 1983 the Flood Control District confirmed the results. The conclusion was that a probable maximum flood would overtop the dam by over one foot, even with the reservoir initially empty.

0.1
67 48-67 — 0.08
81 67-81 — 0.04
81-91

H. This Study

At the time of construction in 1954, the datum used for construction was the 1948 elevation of USC&GS BM H265. No allowance for subsidence was made, whereas the subsidence rate was estimated by the ADOT to be approximately 0.1 ft. per year. Since the dam was constructed six years after the original survey, the BM elevation was ~~actually around~~ probably about 0.6 ft. lower then when set, and the crest of the dam was probably built 0.6 ft. lower than design, or elevation 1215.4.

The difference in elevation between the lowest subsidence monument on dam centerline (Sta. 10+00; elevation. 1211.56) and the highest subsidence monument (Sta. 70+00; elevation. 1215.10) was 3.53 ft. at the time of the latest survey on 07/91. This represents the accumulation of differential settlement since construction of the dam in 1954.

The northerly end of the dam is close (several hundred feet) to C&GS bench mark H265. The southerly end is near bedrock. The differential settlement between the ends of dam is nearly the same as the subsidence of H265. The historical rates in ft/year, of differential settlement and subsidence are also similar. The total subsidence of the dam since constructon is estimated to be 3.8' at ~~the~~ Sta. 10+00, which is 4.4' below crest design. The southerly end has experienced little subsidence while the northerly end has subsided about the same as H265.

Structure #3 lies on the westerly limits of a groundwater basin. A plot of 1923 to 1977 groundwater drawdown levels showed a steep decline of water level from west to east across the dam. The differential groundwater decline would influence differential subsidence.

Analyses of subsidence surveys for 1982 through 1990 show the ends of the dam have subsided somewhat as blocks, while the central portion has sustained the strain of differential subsidence. On the southerly end, this can be explained by relatively low total subsidence from approximately Station 60+00 to Station 75+00. On the northerly end the section of dam between 0+00 and 30+00 is parallel with the lines of equal groundwater surface decline, so the subsidence along that reach of the dam would be expected to be nearly ~~constant.~~ uniform

IV. SUBSIDENCE IN AREA OF DAM

Bench marks were installed along Beardsley Canal by the Coast & Geodetic Survey in 1948, at one mile intervals, at each major street intersection. The closest one to White Tanks No. 3 is BM H265 at Glendale Avenue. It is several hundred feet east of approximate Station 17+00 (see Figure 1).

Conversations were held with Mr. Carl C. Winikka, Asst. State Engineer (retired) from ADOT. He provided subsidence information for four bench marks along Beardsley Canal at Camelback, Bethany Home, Glendale, and Northern (see Figure 1). The information is tabulated below.

Street Crossing	Bench Mark	Subsidence (ft.) 1948-81	Subsidence Rates (ft./yr.) 1948-67	1967-81
Camelback	F265	2.781	0.1133	0.0452
Bethany Home	G265	1.902	0.0754	0.0849
Glendale	H265	3.256	0.1088	0.0849
Northern	J265	2.548	0.0655	0.0931

Rates of subsidence have decreased except at Northern Avenue. Decreases would be expected as use of the groundwater system naturally changes from mining of the water toward lesser use and stable relationship between extraction and recharge. The increase at Northern could be caused by increased extraction or diminution of volume of the water bearing strata without decreased extraction.

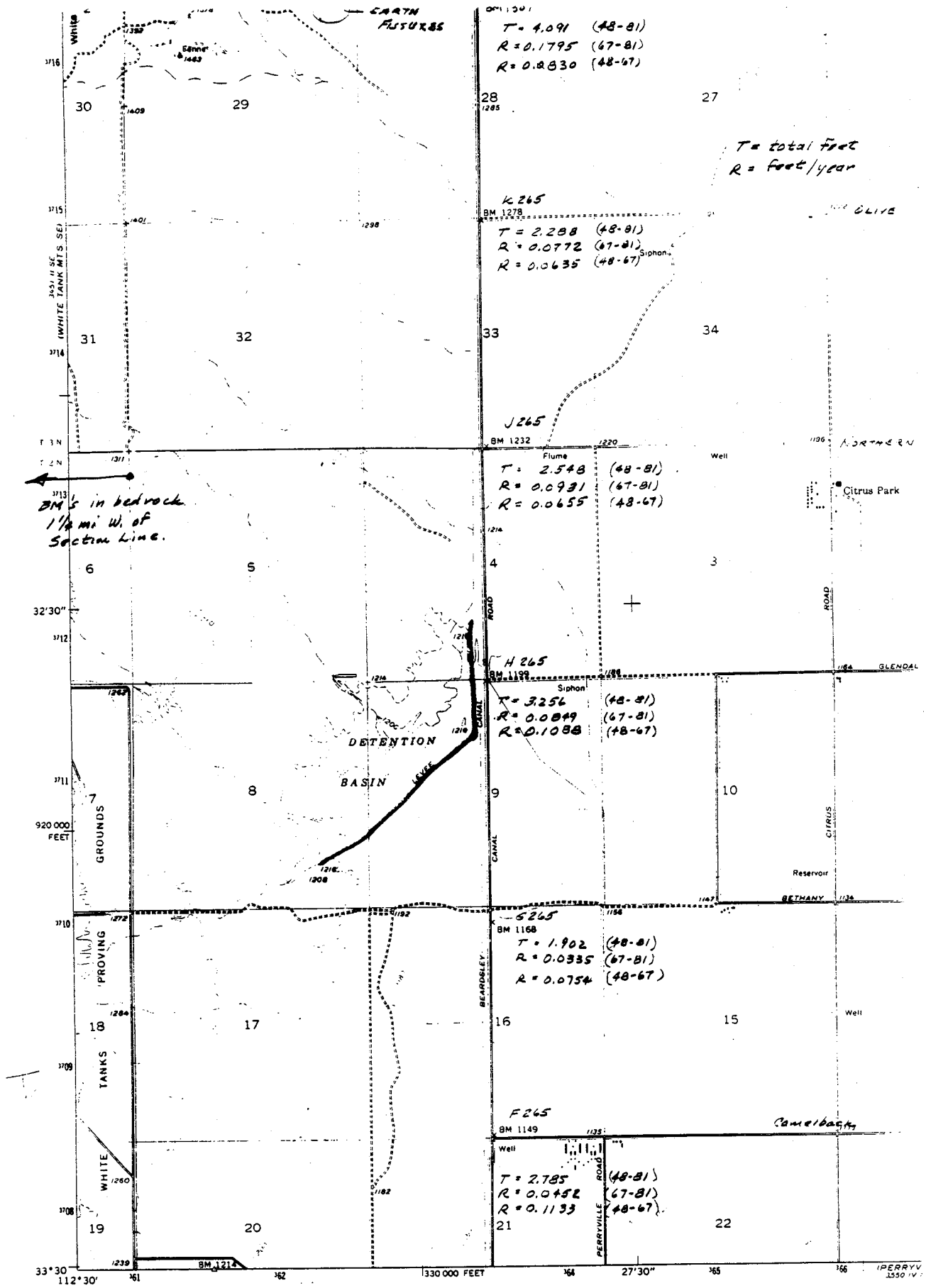

Mapped, edited and published by the Geological Survey

Control by USGS and USC&GS

Topography from aerial photographs by photogrammetric methods and by planetable surveys 1957. Aerial photographs taken 1954

Polyconic projection. 1927 North American datum
10,000-foot grid based on Arizona coordinate system, central zone
1000-metre Universal Transverse Mercator grid ticks, zone 12, shown in blue

THIS MAP COMPLIES WITH NAT

A survey performed in September 1991, for the Flood Control District showed the elevation of H265 to be 1195.691 (adjusted). The subsidence of the EM since the previous survey in 1981 was 0.444 ft., indicating a rate of 0.0444 ft/yr. for the latest 10 years.

V. DIFFERENTIAL ELEVATIONS OF DAM CREST

A. Discovery

A contract was awarded to G.R.L. Construction on September 16, 1981 for repair of cracked areas of structures #3 & 4. The project was completed in August 1982.

On December 10, 1981 the project survey crew ran a level survey along the centerline of the dam, taking shots at 250 feet intervals (see Appendix c). The elevation at station 0 + 00, the north end of the dam, was 1213.9. At station 76 + 65, the southerly end of the dam, the elevation was 1216.4,or 2.5 feet higher than the other end. The difference in elevation between the highest and lowest points was 3.4 feet between elevation. 1213.5 at station 10 + 00 and elevation. 1216.9 at station 75 + 00. This survey marked the discovery of the declining elevation of this dam crest.

B. Possible Causes

Four possible causes for decrease in the crest elevation are:

-- initial construction error;

-- consolidation of the dam fill;

-- consolidation of the alluvial foundation material under the dam fill;

-- general subsidence caused by mining of groundwater.

1. Initial Construction Error

Sufficient survey data were not found in the files to show that final survey of the top of dam verified it was constructed to the design level. However, plotted final cross sections for Stations 30+00, 39+00, 63+00 and 73+00 indicated the structure was properly completed. Furthermore, the survey data required to prepare earthwork quantities for payment should leave little chance for a large error in final finished grade.

The construction Survey for the dam, dated 3/31/54, was based on the 1984 elevation of USC&GS bench mark H265 (elevation 1199.39), located at Glendale Avenue and Beardsley Canal. No correction was made for subsidence during the six-year interval. The 1967 elevation of H265 was 1197.32, and the average annual subsidence for the BM was 0.109 ft./year for the period 1948-67. The actual elevation of BM H265 was probably about 1198.8 in 1954. The dam crest would have been constructed about 0.6' lower than design.

1948

2. Consolidation of Dam Fill

The dam was constructed to 95% of Standard Proctor Density, with a maximum depth fill of about 29 feet. Consolidation after this level of compaction should be negligible.

3. Consolidation of Alluvial Foundation Material Under The Dam

Consolidation of the foundation material due to the weight of the dam can be expected, but cannot be readily quantified without bench marks designed specifically for measuring consolidation. Furthermore, it is difficult to differentiate between consolidation due to the weight of the dam and consolidation (subsidence) due to lowering of groundwater level.

An indicator of foundation consolidation due to the weight of the dam may be the change in differences between subsidence monument elevations on the top of dam and those at the left toe of slope. Surveys conducted in February 1984 and August 1990 indicated consolidation of the dam foundation during those 6.5 years was as follows: (see Appendix D):

Bench Marks	Station	2/84 to 9/90 "Apparent" Consolidation (ft.)
A1 - B1	10+00	0.025

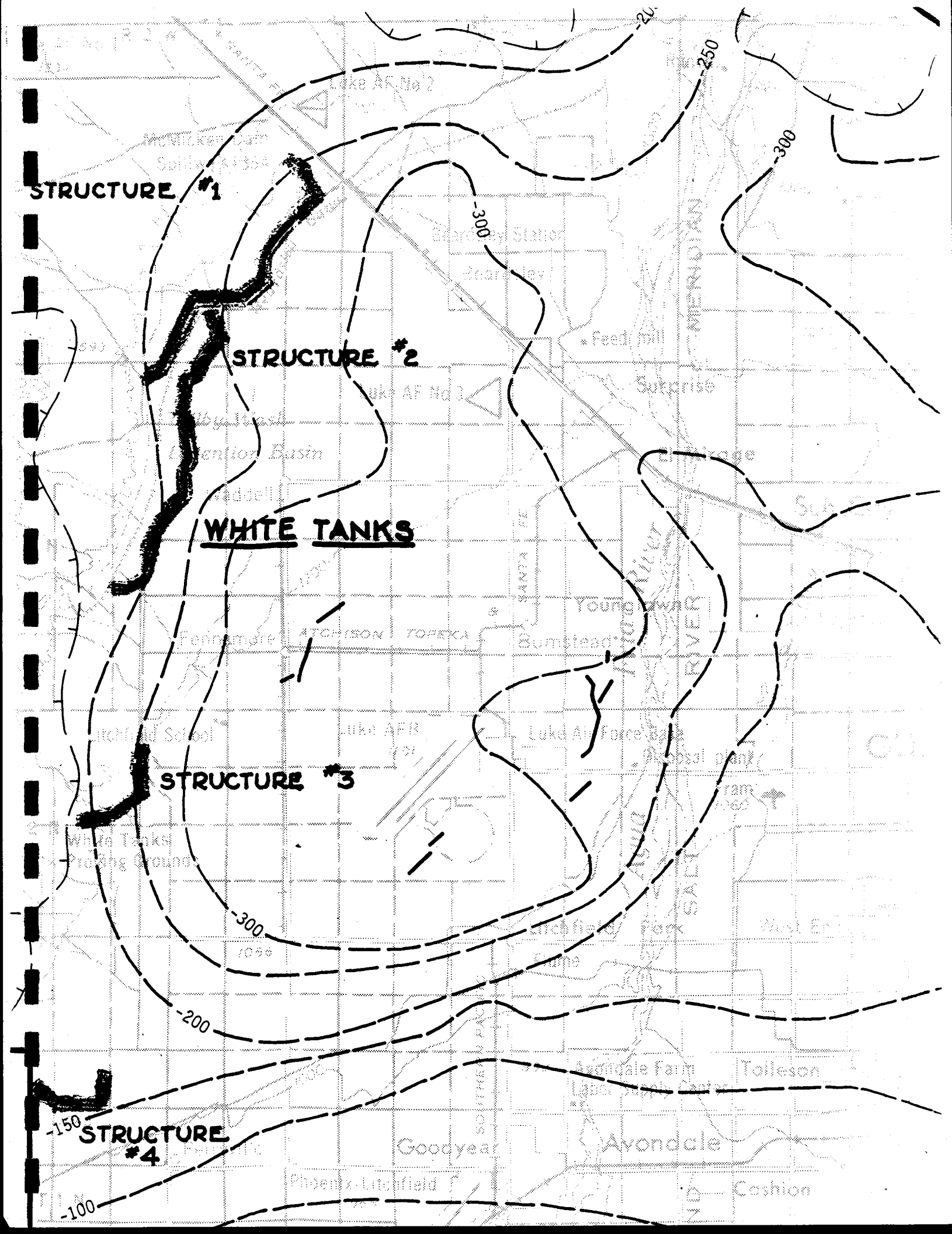
STRUCTURE #1
STRUCTURE #2
WHITE TANKS
STRUCTURE #3
STRUCTURE #4
-250
-300
-300
-300
-200
-150
-100
Luke AF No 2
Luke AF No 3
Luke AFR
Luke Air Force Base
Feed mill
Surprise
Young
Buckeye
Tolleson
Avondale
Goodyear
Cashion
Phoenix-Litchfield
Fennemore
Bumtead
Litchfield Park
Avondale Farm
Sun Valley
Wagoner
Aldell
White Tanks
Shooting Ground
Luke Airfield School
Sanitary Landfill
Waste Disposal plant
Sewage Farm
Sewage Farm
Sewage Farm

A2 - B2	20+00	0.045
A3 - B3	30+00	0.051
A4 - B4	40+10	0.026
A5 - B5	50+00	0.025
A6 - B6	60+00	0.086
A7 - B7	70+00	---*---
		0.043 (average)

* BM A7 was reset, making A7 - B7 irrelevant.

The magnitude of the rate of consolidation during the period 2/84 to 8/90 was about 0.0066 ft/year. This compares with the calculated rate of subsidence 0.0849 ft/year at C&GS bench mark H 265, located near 8M B2 and B2, during the same period. The estimate was based on the assumption that the subsidence rate continued to be the same during 81 - 90 as it was during 67 - 81.

There are several points to be made from the above results which indicate consolidation due to dam weight is not an important factor in the differential settlement along the structure. First, the maximum "apparent" consolidation (0.086 ft.) occurred at Station 60+00 of the structure where settlement was low. Secondly, there is no clear pattern of differential consolidation which relates to the differential elevation measurements. Furthermore, the rate of "apparent" consolidation (0.0066 ft/yr) is very small compared to the estimated rate of regional subsidence (0.0849 ft/yr).

It should be pointed out that the above conclusions are only indicated. The movement of monuments at the toe of slope can be misleading because they might move in an unpredicted direction, depending on settlement conditions.

4. General Subsidence Caused by Mining of Groundwater

General subsidence due to lowering of groundwater levels is clearly The major contributor to settlement of the dam. Figure 2 shows how the dam is located along the westerly boundary of a groundwater basin, and how groundwater levels changed during 1923 to 1977. It also indicates why the structure has been subject to differential settlement:

1. The proximity of bedrock near the southerly end would reduce settlement there, while the northerly end would be expected to settle at approximately the same rate as the nearby bench mark H265 at Glendale and Beardsley Canal.

2. Steep slope of the groundwater surface at the structure indicates that soil moisture conditions help cause differential settlement in the manner it has occurred. Lesser subsidence would be expected where the change in the groundwater surface elevation is less.

Surveys conducted during 1982 to 1990, show that the ends of the dam tend to subside as blocks. The approximate stationing of these blocks is from 0+00 to 30+00 on the northerly end and 60+00 to 75+00 on the southerly end. The northerly blocks movement can be explained by the fact that it parallels a line of equal groundwater level decline along which subsidence would be expected to be nearly uniform. The southerly block is located over or near bedrock where subsidence should be minimal.

Since subsidence monuments were installed in 1984, surveys have shown the lowest monument to be A-1, located at Sta. 10+00, and the highest to be A-7, located at Sta. 70+00. For the July 1991, survey the calculated elevations were 1211.561 and 1215.091, respectively. The difference between the two was 3.53 feet. The original design elevation was 1216.0, about 4.4 feet above monument A-1.

C. Subsidence Analysis

Bench mark H265 subsided 3.256' during the period 1948 - 1981 (33 years). The differences between elevations of bench marks A1 and A7, located on the centerline of structure, was 3.529 feet in July 1991, 36 years after the dam was constructed with constant crest elevation. The rate of subsidence for H265 during 1948 - 1981 was 0.0987 ft/yr, while the rate of differential subsidence between Stations 10+00 and 70+00 was 0.0954 ft/yr. The implication is that the southerly end of the structure sustained little subsidence and the northerly end subsided about the same as BM H265.

Total differential subsidence between BM A1 and other 'A' BM's is plotted in Figure 3. Analysis of the difference between A1 and A7 shows differential subsidence between the two points occurred at the following rates:

Period	Rate of Differential Subsidence
1954-1984	0.0843 ft/yr
2/84-7/86	0.0579
7/86 - 8/90*	0.0354

*Based on estimated elevations of A7 in 1990 after reset of BM A7.

The figures indicate the rate of differential subsidence is decreasing. By comparison, the most recent data available for subsidence of H265, showed subsidence rates of 0.1088 ft/yr for 1948 - 67, 0.0849 ft/yr for 1967 - 81, and 0.0444 ft/yr. for 1981 - 1991.

The most recent survey of dam centerline was taken December 17, 1990. Figure 4 is a plot of that survey, and shows the current relationship between the spillway and the dam. The approximate average elevation of the spillway is 1.9 ft below the lowest point surveyed on the dam. The design maximum water surface was 3 ft above the spillway demonstrating that the dam could not withstand such an event.

Figures 3 and 4 also demonstrate that little differential subsidence took place between Stations 0+00 and 30+00 on the northerly end, and between 60+00 and 75+00 on the southerly end as previously discussed.

UAN 5/1/91

WHITE TANKS #3 SUBSIDENCE

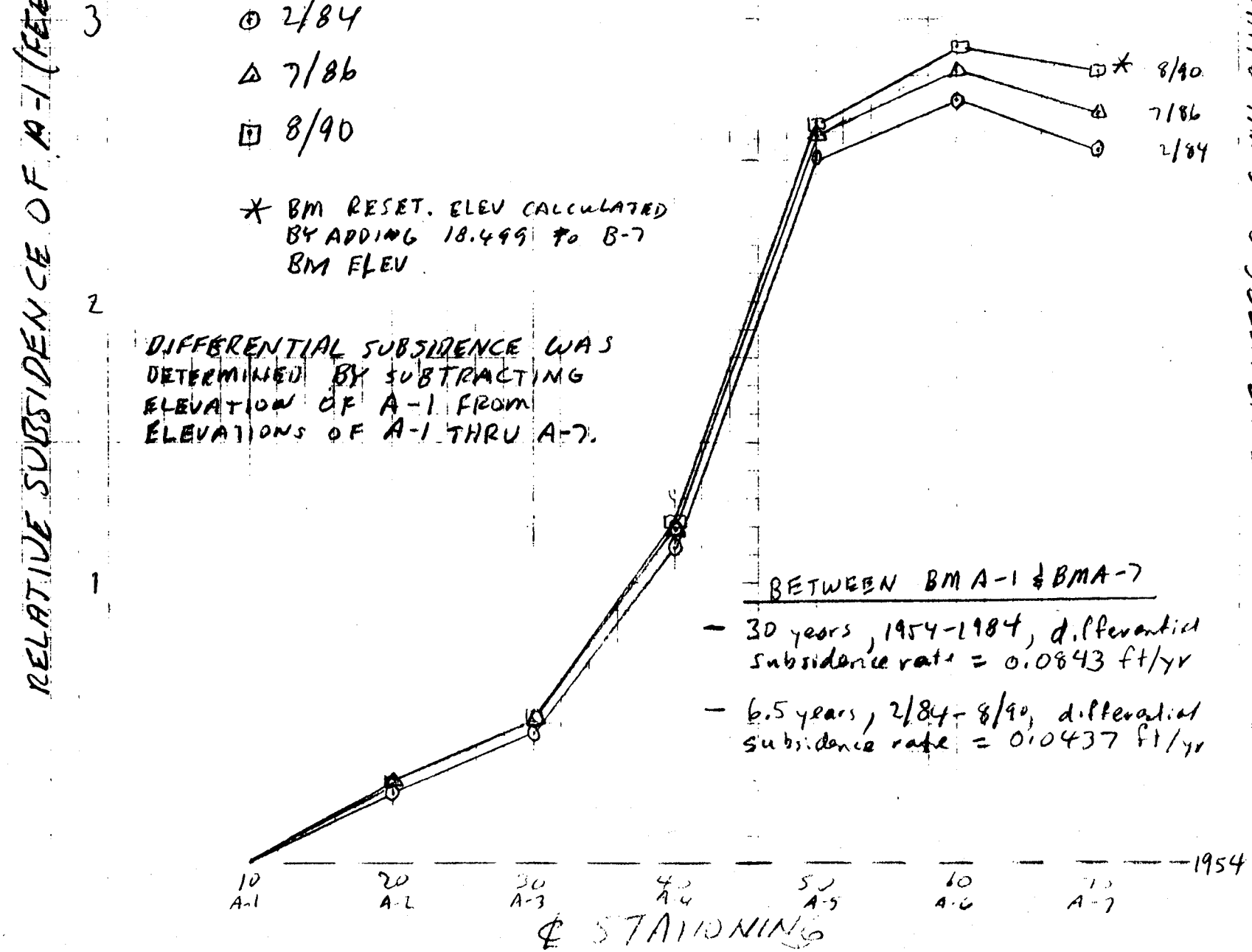

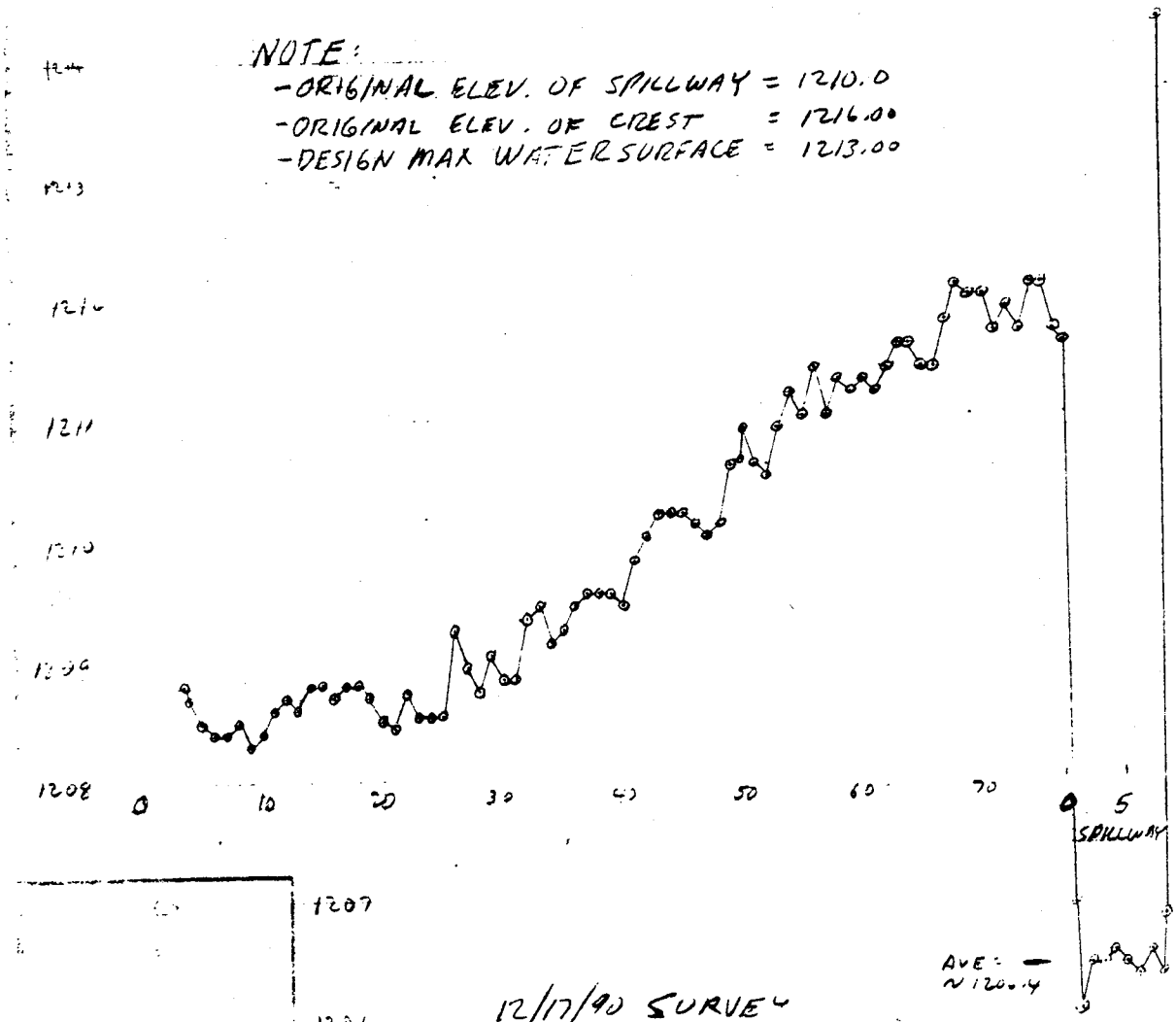

12/17/90 SURVEY
WHITE TANKS #3 CENTERLINE
BASED ON BM J265

FIGURE 4

COMPUTATION SHEET
SCS-ENG-522 REV. 3-69

U.S. DEPARTMENT OF AGRICULTURE
SOIL CONSERVATION SERVICE

STATE	PROJECT		
BY	DATE	CHECKED BY	DATE	JOB NO.
SUBJECT				SHEET ____ OF ____

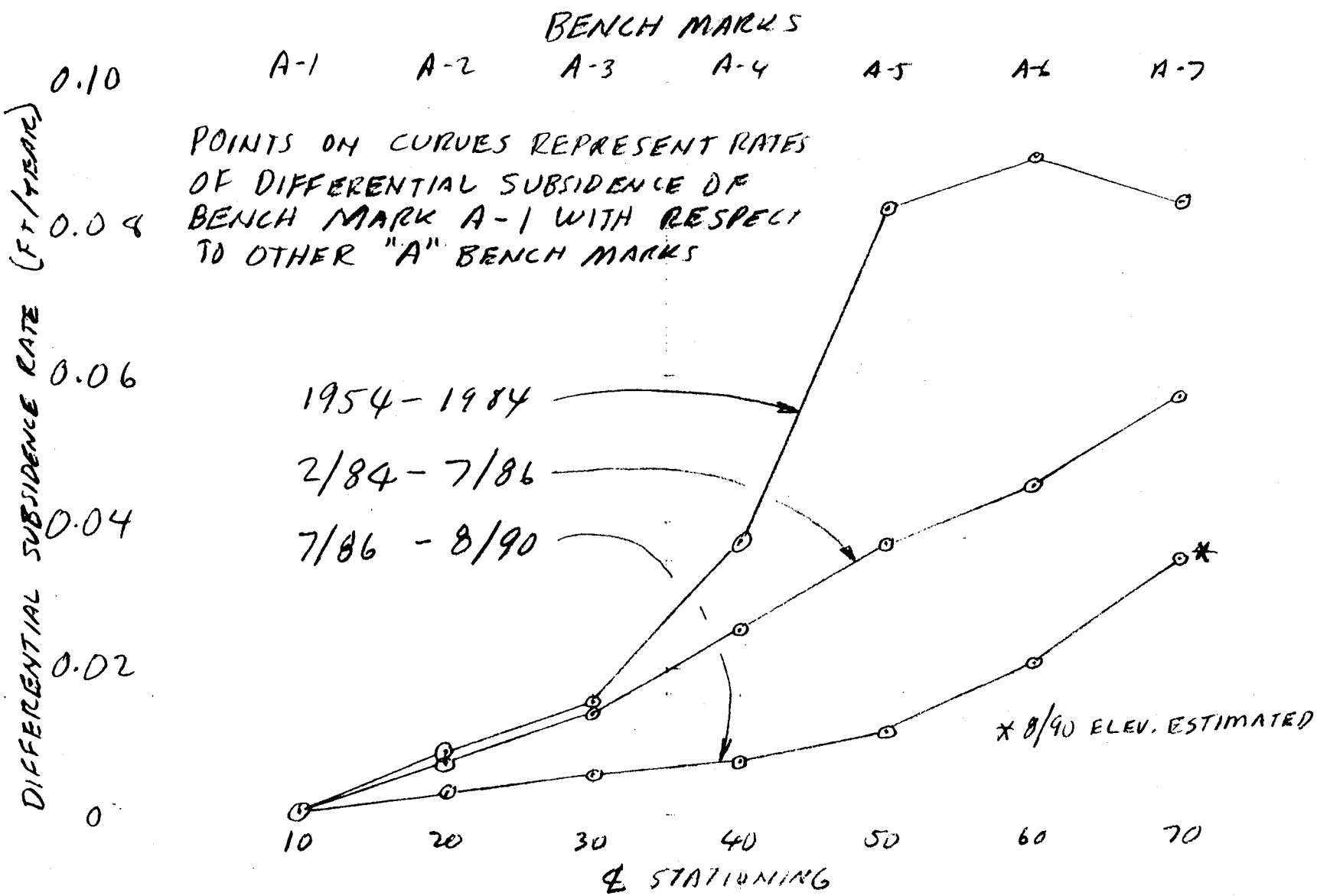

The elevation of subsidence monument A-1 was 1207.883 in July 1991, based on BM 8-90. Ties to USC&GS monuments showed the correct elevation to be 1211.561 in accordance with BM Q475. The original design called for a crest elevation of 1216.0, so the lowest existing crest elevation is 4.439' below design level.

VI. SUBSIDENCE RELATED TO CRACKING

Considering the scope of differential subsidence along the dam crest, it might be a much greater contributor to cracking than was previously assumed. The crack team and Fugro studies assumed that desiccation was the main problem causing transverse cracking, and the shallow foundation consolidation was the main contributor to longitudinal cracks. However, there were no survey data available for those studies to specifically assess subsidence of the structure.

Analysis of the surveys taken in 1982, 1984, 1986 and 1990 were made based on the assumption that upon completion of the dam in 1954 the crest was level at the design elevation.

Figure 3 shows overall differential subsidence between subsidence monument A-1 and the other "A" monuments, based on surveys in 1984, 1986 and 1990.

Figure 5 shows rates of differential subsidence (ft/yr) for The "A" monuments during the time periods 1954-1984, 2/84-7/86 and 7/86-8/90. The significance of the curves is that the first shows a high rate of strain between Stations 30+00 and 50+00 during the 30 year period 1954-1984. In more recent years, the area of maximum strain has moved to Station 50+00 to 70+00.

Figure 6 is a plot of the rate of differential subsidence between subsidence monument B1 and the other "B" monuments for the periods 5/82-2/84, 2/84-7/86 and 7/86-8/90. The rates of subsidence for the 5/82-2/84 period are similar to those for the 30 year period for the "A" monuments, while the rates for the later periods again are less and indicative of higher strain in the area of Station 60+00.

All the rate curves indicate a slowing in differential subsidence in recent years. However, the area of maximum strain, or the maximum relative subsidence between two consecutive subsidence monuments, has apparently moved from the central portion of the dam (stations 30+00 to 50+00) to the southerly portion (stations 50+00 to 70+00). This could be explained by recent stabilization in groundwater levels at the center section, while the water bearing strata below the southerly end continues to dewater.

Figure 7 shows a family of plots of differential subsidence for "A" and "B" monuments. These curves clearly show the maximum strain in the dam fill has been in the area of stations 50+00 to 70+00 during the most recent years.

In the memo from Hobson to Arrington dated June 20, 1979, concern was expressed about the cracking pattern of white Tanks No. 3 being different from those of other dams. An explanation could not be made at that time. There is no direct proof that differential subsidence was the cause of the large crack, or unusual cracking pattern but the survey analyses strongly suggest that it may be at least partially responsible.

COMPUTATION SHEET
SCS-ENG-522 REV. 3-69

U.S. DEPARTMENT OF AGRICULTURE
SOIL CONSERVATION SERVICE

STATE	PROJECT		
BY WMM	DATE 5/14/91	CHECKED BY	DATE
SUBJECT SUBSIDENCE RATES - STRUCTURE #3			JOB NO.
			SHEET ____ OF ____

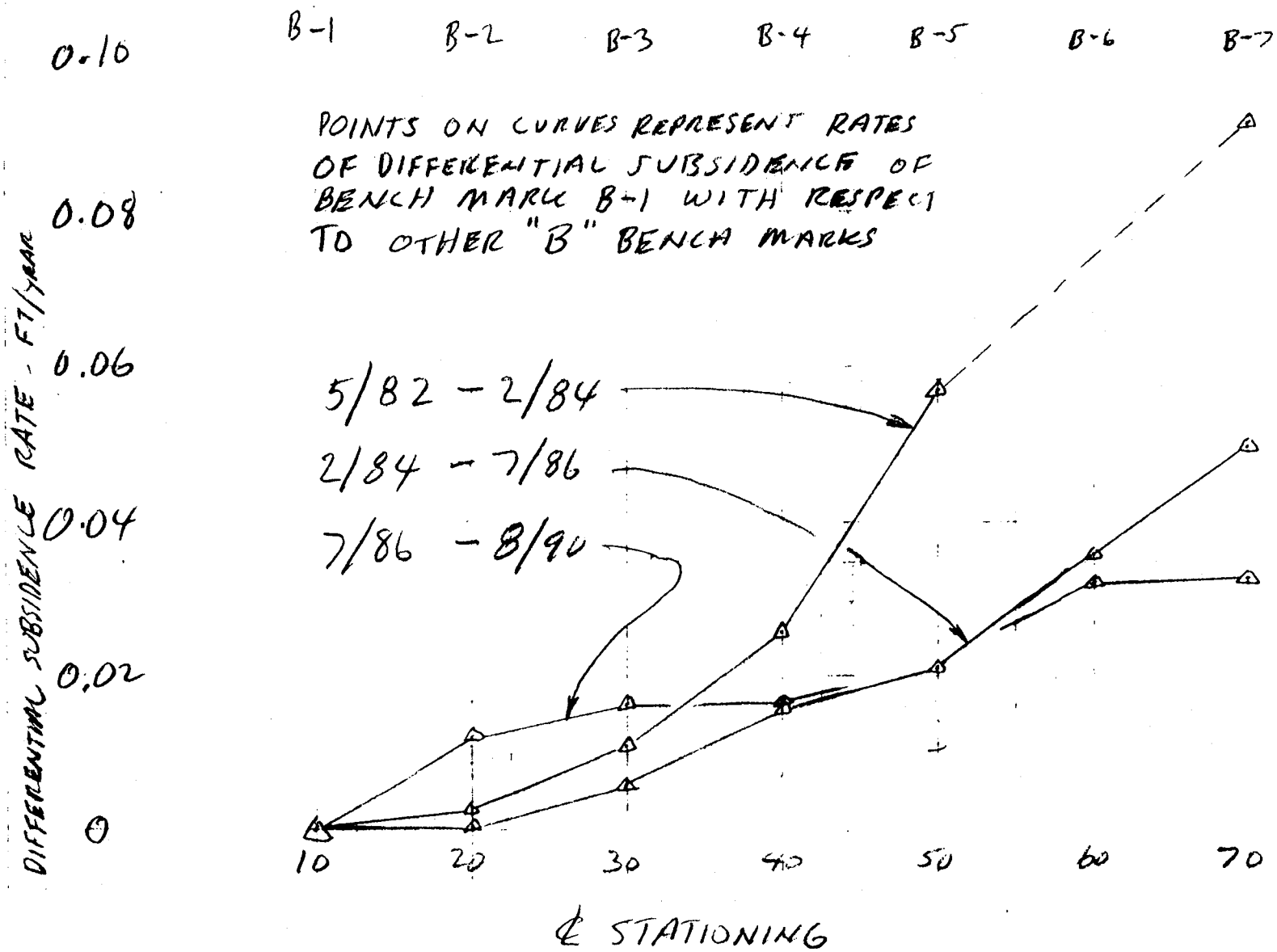

VII. UPDATED HYDROLOGIC/ HYDRAULIC ANALYSES

In 1981, Ertec Western, Inc. performed a hydrologic/hydaulic investigation as part of a Phase 1 inspection report for White Tanks Retarding Dam No. 3. The analysis was made with a HEC-1 model.

The Flood Control District, in 1983, updated the analysis with use of the latest version of HEC-1. The District concurred with the earlier analysis and the results were summarized as follows:

a. The structure would be overtopped 1.12 feet during a Probable Maximum flood (PMF) if the structure were initially full.

b. The structure would be overtopped by 1.02 feet during a PMF if the structure were intially empty.

c. The structure would not be overtopped during a 1/2 PMF event.

The analysis was based on the assumption that the crest elevation of the dam was the same as as-built, 1216 feet. No allowance was made for subsidence of the crest by approximately 4.0 feet relative to the spillway. The dam would therefor be overtopped sooner than the study indicated.

VIII. ADDITIONAL INFORMATION NEEDED

A. Short Term

The subsidence surveys for white tanks and Buckeye structures have been based on the bench mark "DEAD", and have varied from other USC&GS monuments about 3.7 feet. In order to achieve direct comparison with design and as-built date, all subsidence surveys should be tied into a grid of USC&GS monuments established in rock. Future subsidence surveys would then be more easily analyzed to determine actual subsidence and to perform hydrologic/hydraulic reviews.

B. Long Term

Subsidence surveys should be performed every two years, and should always be based on a bench mark in rock. Water levels should also be determined for wells in the vicinity, preferably at timing close to that of the surveys. Subsidence changes and water level changes can be determined and compared.

Water level information is available at the Arizona department of Water Resources, Basic Data Section. It can also be found at the Maricopa County Water District #1 Office, which monitors water levels in the area.

IX. DESIGN PROBLEMS

Original and Repair

There is little information available regarding the original design of the structure. However, it is likely that the problem of subsidence in the area had not yet been observed, and was therefore not considered.

When studies were performed in 1978 and 1979 to determine the cause of cracks in the dam, subsidence was discussed, but no attempt was made to determine if it would be a causative factor. Available information therefore led to the conclusion that transverse cracking was mostly a result of desiccation.

There are at least two activities which could have been included in the crack study works which might have led to some different conclusions. The first would have been a centerline survey of the dam to determine if it had been subjected to any type of settlement. The second would have been a review of available information on groundwater levels in The area.

Survey and groundwater information could have sparked additional questions regarding the cracking, and probably would have resulted in additional repair work to raise the crest of The dam or reconstruct the spillway.

X. EXISTING RIGHT-OF-WAY

The dam and reservoir are on Flood Control District right-of-way. Assessor's parcel numbers and maps are provided in Appendix E.

The property south of the central section of the dam is owned by Maricopa Water District.

XI. RECOMMENDATIONS FOR REPAIR

A. Determine Existing Conditions

Total subsidence along the dam centerline needs to be determined. The reservoir floor elevation also needs to be surveyed and the volume of existing reservoir determined.

B. Estimate Future Subsidences

Future subsidence of the dam and reservoir needs to be estimated. The information will be used for design of repairs to maintain sufficient freeboard even after ultimate subsidence has been achieved.

A preliminary estimate of future subsidence was made by plotting the elevations of BM H265 versus the yers since 1948 (Figure 8). A family of envelopes was developed to demonstrate the minimum and maximum apparent life of the structure before subsiding a given amount. For example, 2' of fill would compensate for the subsidence which would occur in the next 88 to 400 years.

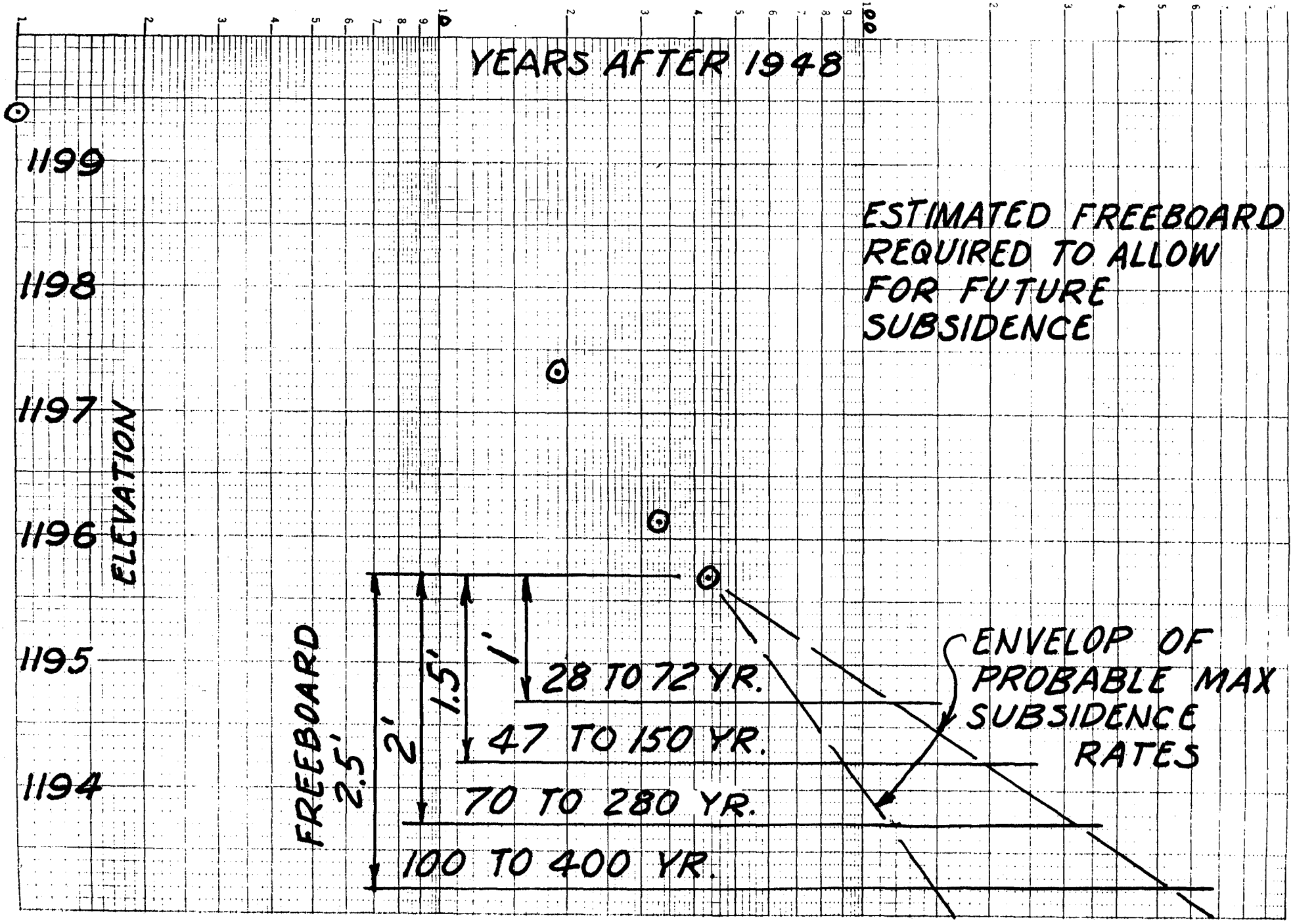

YEARS AFTER 1948
ESTIMATED FREEBOARD REQUIRED TO ALLOW FOR FUTURE SUBSIDENCE
ELEVATION
1199
1198
1197
1196
1195
1194
FREEBOARD
2.5'
2'
1.5'
1'
28 TO 72 YR.
47 TO 150 YR.
70 TO 280 YR.
100 TO 400 YR.
ENVELOP OF PROBABLE MAX SUBSIDENCE RATES

C. Verify Hydrologic/Hydraulic Conditions

Perform a new hydrologic/hydraulic analysis as necessary to determine the options for repair to make the structure safe under conditions of a PMF. Options will include increasing the reservoir capacity, increasing the spillway capacity, breaching the dam, construction of an ordinary spillway or other improvements arrived at through the design procedure.

D. Design Repair Works

No detailed recommendations are made herein as to how to design and construct the repairs, except for those actions listed in A, B, and C above.

BIBLIOGRAPHY

STEARNS, C. E., SMITH. R. J., and STEVENSON, J. C., 1977; Cracking of Dams in Arizona Interim Report of SCS Study Team for USDA Soil Conservaton Service, Phoenix, Arizona, 17 p. with figures.

STEARNS, C. E., SMITH, R. J., and STEVENSON, J. C., 1978; Cracking of Dams in Arizona Report of the Crack Study Team for USDA Soil Conservation Service, Phoenix, Arizona, 31 p. with figures.

FUGRO, INC., Consulting Engineers and Geologist, 1979; Crack Location Investigation White Tanks No. 3 Flood Retarding Structures Maricopa County, Arizona, for Soil Conservaton Service, 16 p. with Appendices.

ERTEC WESTERN, INC., 1981; Phase I Inspection Report for White Tanks Retarding Dam No. 3, for Department of Water Resources, 39 p. with figures.

ENGINEERING REPORT
HARQUAHALA FRS
INVESTIGATION OF
EMBANKMENT CRACKS AT STATIONS
490+00 AND 555+25

AUGUST 21, 1991

GENERAL

On July 16 and 17, 1991 Aubrey Sanders and John Harrington met with Ellery Biathrow from the Flood Control District of Maricopa County at the Harquahala FRS to investigate 2 longitudinal cracks in the top of the dam. The cracks were discovered by FCD maintenance crews in early 1991.

The cracks are located near stations 490+00 and 555+25 which are within the western 3 miles of the 12 mile long structure. The FCD provided a Case 780 backhoe with a 36-inch wide bucket and a 4000 gallon water truck to investigate the cracks. The FCD also performed a subsidence survey (by an A&E firm) of the structure during June and July of this year.

STRUCTURE BACKGROUND

The dam was completed in 1983. It is approximately 25 feet high. It is an earthfill structure with a transition zone which extends from the original ground line to 7 feet below the top of the structure. The transition consists of two zones; a coarse grained material 3 feet wide with a clean gravel 2 feet wide downstream. The transition is placed on a 0.5 to 1 slope (sloping downstream away from the FRS centerline). The as-built drawings indicate the entire foundation was stripped from 1 to 7 feet, and a cutoff trench was excavated a minimum of 5 feet below the original ground line. The centerline of the cutoff trench is located 35 feet left (upstream) of the dam centerline.

The foundation materials along the west reaches of the structure generally consist of CL, SM, and ML materials. The foundation materials along the east reaches of the structure are coarser, generally classified as GP and GM.

SUBSIDENCE SURVEYS

The survey results indicate the top of dam has settled up to approximately 0.35 feet near the west end of the structure. The settlement at the east end is negligible according to the survey. This information is consistent with foundation conditions and materials shown on the drawings. This

information indicates that the cracks may be related to the settlement of the structure.

SITE INVESTIGATION

On July 16, the depression around the crack (6" wide x 6" deep x 3 feet long) near station 490+00 was filled with water and maintained full for a few minutes. It is estimated that less than 50 gallons was used. The water went into the crack at a fairly steady rate. Water did not flow out onto the dam slope. A few hours later a trench was excavated parallel to the crack at station 489+95 in four increments to a total depth of approximately 7 feet. (See attached sketch). Rodents apparently had burrowed into the crack to about 3.5 feet below the surface. The crack continued below the animal burrow, aligned vertically and within 1 foot of dam centerline. Moisture from the water placed in the crack extended to the rodent burrow. The crack was approximately 3/4-inch wide at 4 feet below the surface, and narrowed to approximately 1/2 inch wide at 7 feet. The transition zone was not intercepted in this trench. The crack contained root systems, generally 1/8-inch or smaller. The crack was filled with loose material.

The backhoe was moved 15 feet and a second trench excavated directly over the crack. The trench was excavated to 3.5', 5.5', 8.5', and 11.5 feet. (See attached sketch). The crack remained within 2 feet of dam centerline and extended the full depth of the excavated trench. The trench was excavated 3 feet into the transition fill material. The crack extended into the upstream layer of transition material and was estimated to be 1/8-inch wide through the transition fill. Root systems and loose fill also existed in the crack to this depth.

On July 17, the backhoe began a trench at station 555+25, 8 feet right (downstream) of dam centerline. This placed the trench directly over the longitudinal crack at this location. The trench was excavated to 4', 6.5', 7.5', 8.5', 10', and 11.5'. (See attached sketch). The crack sloped toward the centerline of the dam and intercepted the coarse transition fill zone approximately 9.5 feet below the top of the dam. The crack could not be traced into the gravel material. The crack was estimated to be about 1/2-inch wide through most of the depth and diminished to 1/8-inch wide at the transition material. Root systems followed the crack to its depth. A secondary crack was located in the same trench, less than 1/8-inch wide. It also contained roots. The second crack was oriented more vertically than the main crack.

A third trench was excavated approximately 3 feet deep at a station chosen at random to see if other cracks existed that have not shown up at the surface. The trench extended from

the downstream top edge of the dam to the centerline of the dam. No crack was found.

The water truck was placed at the two trenches excavated on the 16th. One trench was filled with water. After approximately 30 minutes no water had seeped through the crack to the second trench located on the same crack a few feet away. Water was sprayed through a three inch hose and nozzle directly into the the crack, impinging on the vertical face of the excavation. Five to ten minutes elapsed before the water jet worked through the two or three feet of crack.

CONCLUSION

The cracks are not considered a threat to the structure at this time. The transition zone is intact and should function as designed. The amount of settlement measured so far is not excessive. No action is recommended at this time other than to continue to monitor subsidence through surveys at the normal scheduled intervals and report any new development of cracks for review.

BACKFILL

The FCD stated they will compact the excavated material back into place in 6 to 8-inch lifts with a tamper mounted to the backhoe. Moisture will be applied according to judgment.

by John M. Harrington
State Design Engineer

reviewed by Anthony Landon Jr.
State Geologist

COMPUTATION SHEET
SCS–ENG–522 REV. 3–69

U.S. DEPARTMENT OF AGRICULTURE
SOIL CONSERVATION SERVICE

STATE		PROJECT		
ARIZONA		HARQUAHALA FRS		
BY JMH	DATE 8-21-91	CHECKED BY	DATE	JOB NO.
SUBJECT CRACK INVESTIGATION 490+00 & 555+25				SHEET ____ OF ____

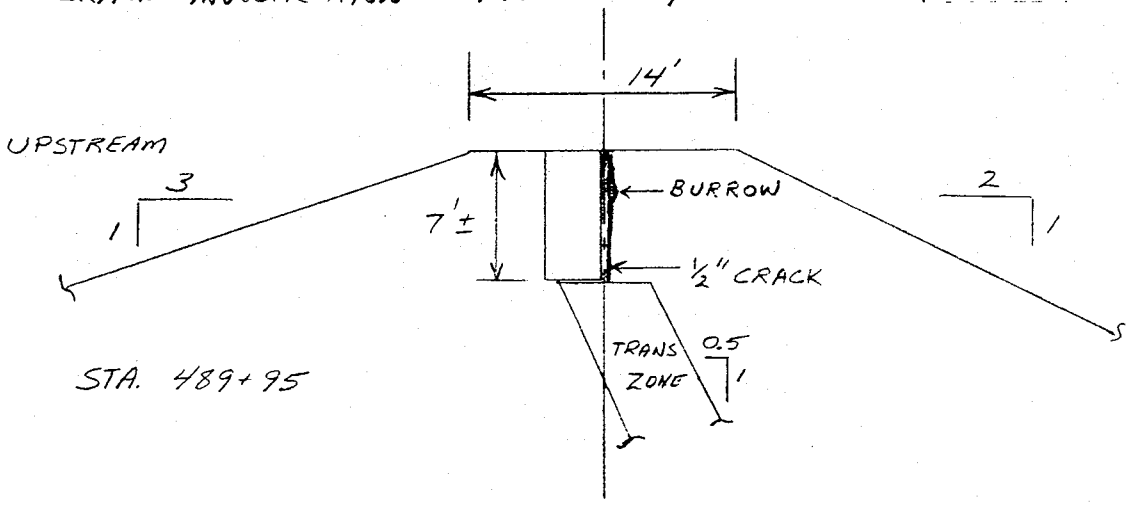

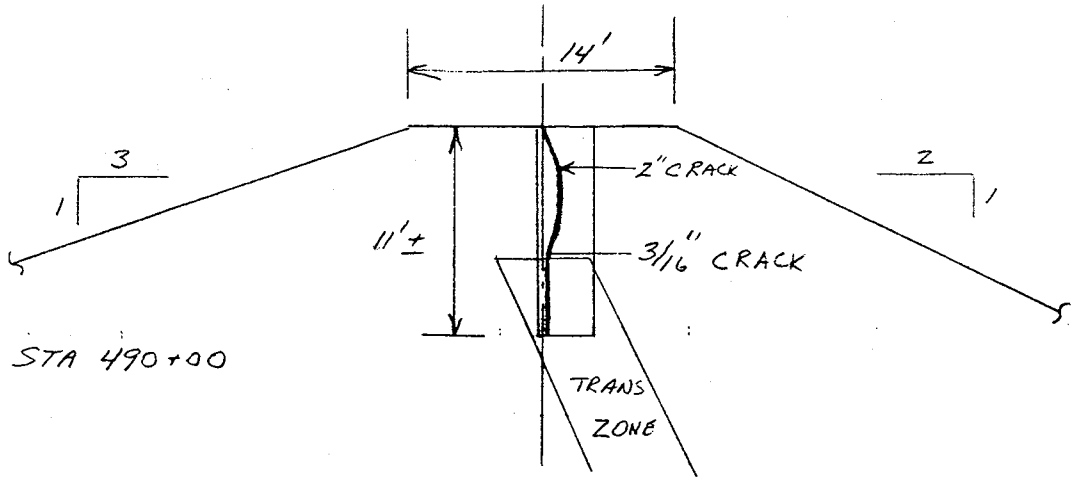

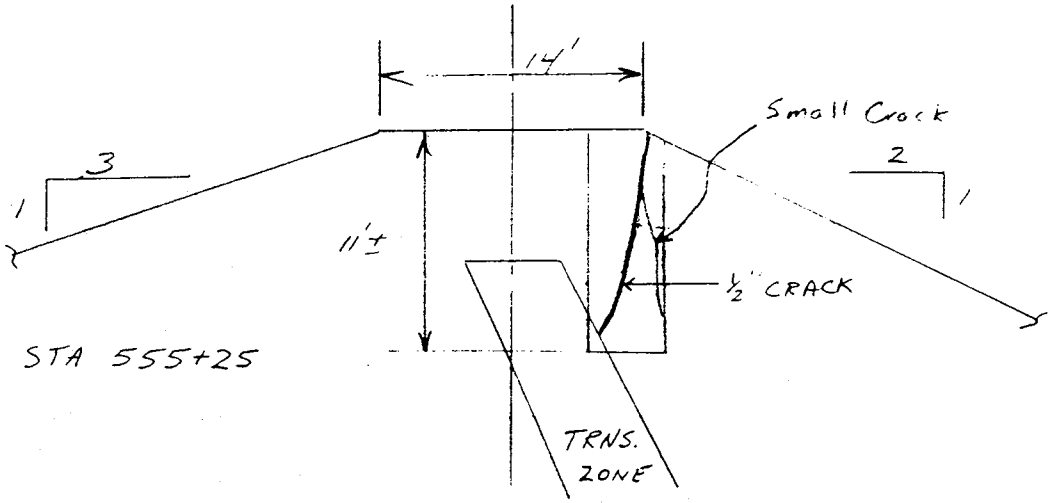

COMPUTATION SHEET
SCS-ENG-522 REV. 3-69

U.S. DEPARTMENT OF AGRICULTURE
SOIL CONSERVATION SERVICE

STATE		PROJECT WHITE TANKS #3		
BY WAM	DATE 8/28/91	CHECKED BY	DATE	JOB NO.
SUBJECT ESTIMATED FILL REQ'D ON DAM				SHEET ____ OF ____

Design Water Surface	1213.0	FT
Assume 2' Req'd for PMF	2.0	
New Design Water Surface	1215.0	
Freeboard	3.0	
New Dam Crest Min. Elev.	1219.0	
Approx. Max. Exist. Crest Elev.	1215.8	
Min. Fill Req'd	5.2	
Est. Max. Allow Future Subsidence	2.0	
New Dam Crest Max. Elev.	1220.0	
Exist. Min. Dam Crest Elev.	1211.5	
Approx. Max. Fill Req'd	8.5	

DRAWING PAPER NO. 1371-21
TRACING PAPER NO. 1230-21
SEMI-LOG. 3 CY. BY 10 DIV./ IN.
AQUABLE
MADE IN USA

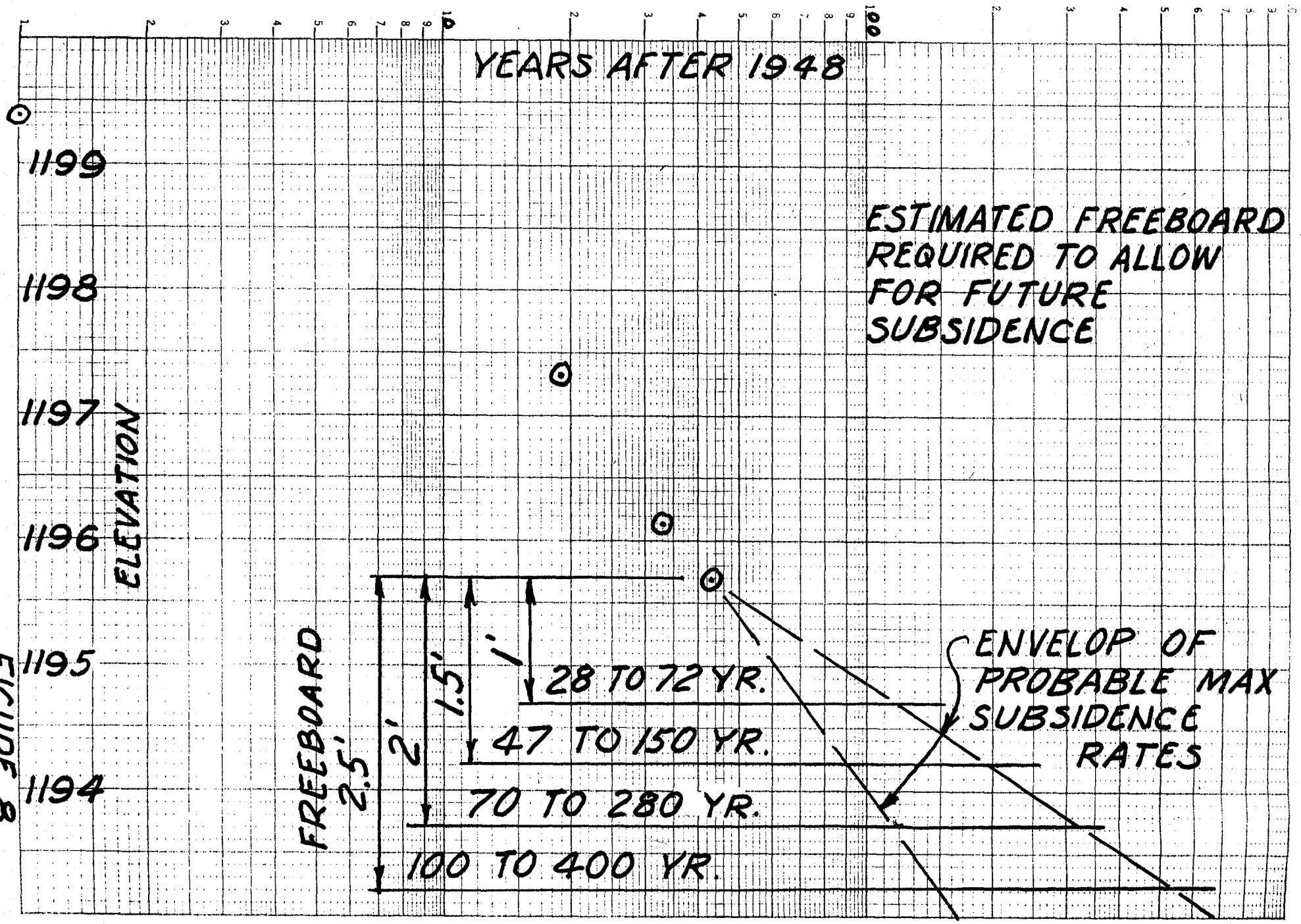

FIGURE 8

19th Sept | PLD
9:00

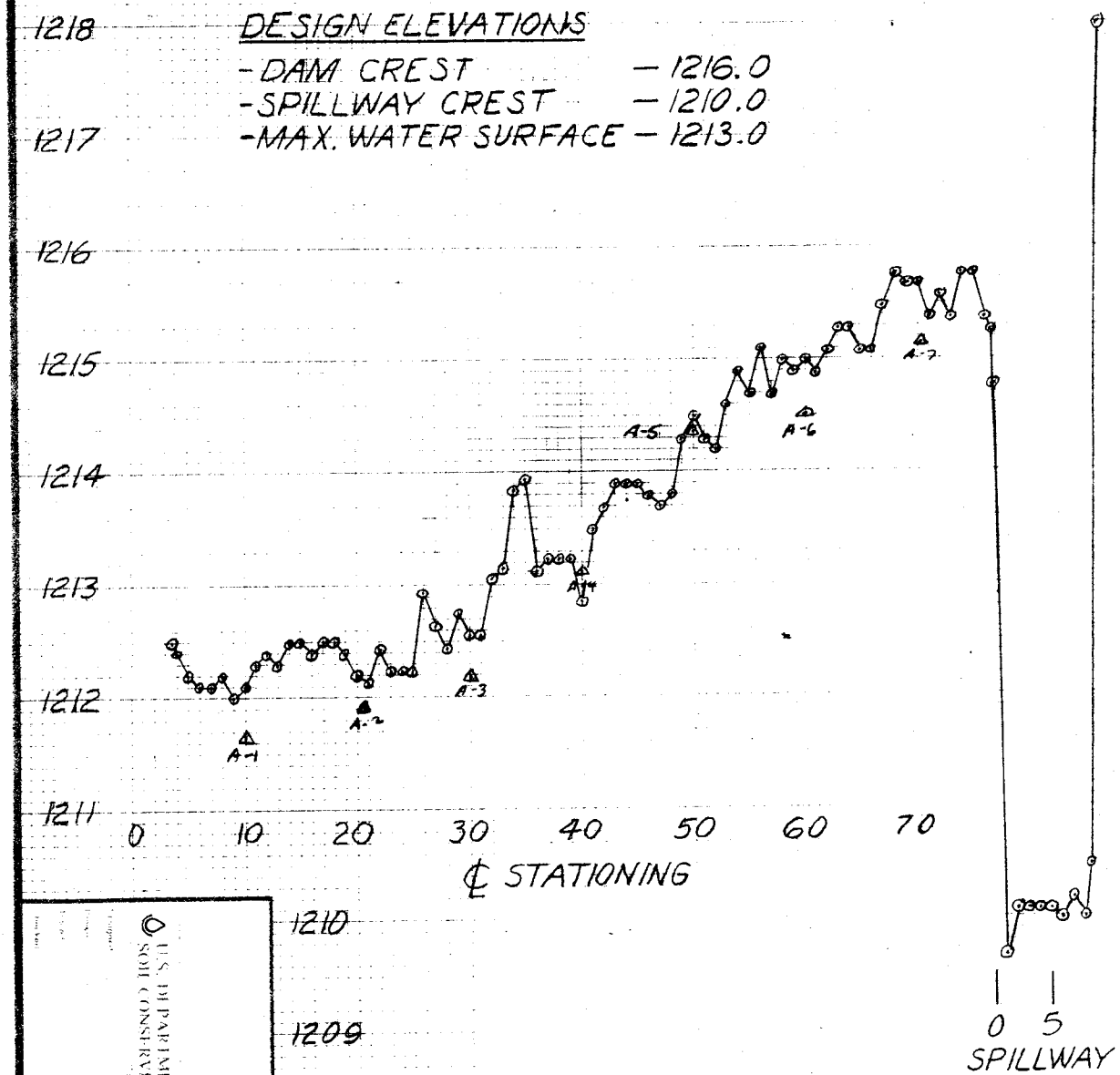

U.S. DEPARTMENT OF AGRICULTURE
SOIL CONSERVATION SERVICE

12/17/90
SURVEY BASED ON BM R3A, ADJUSTED BY +3.68' TO MATCH BM Q475

WHITE TANKS #3

FIGURE 4