Property of
Flood Control District of MC Library
Please Return to
2801 W. Durango
Phoenix, AZ 85009

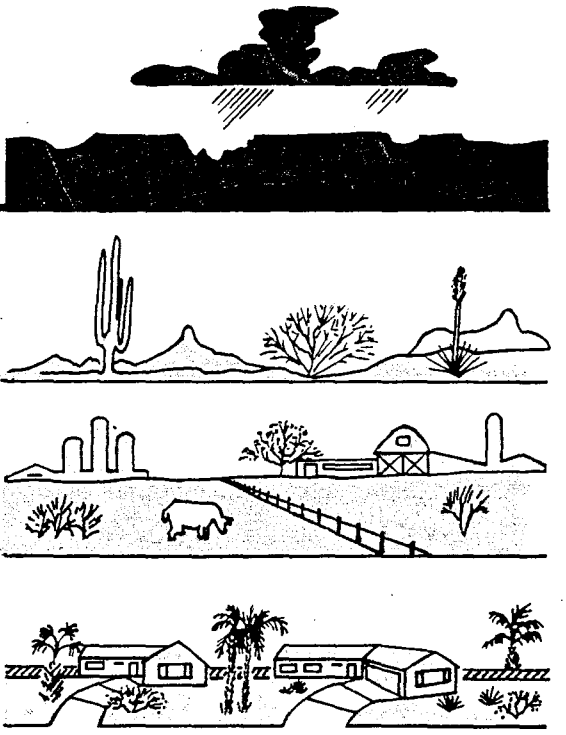

Property of
Flood Control District of MC Library
Please Return to
2801 W. Durango
Phoenix, AZ 85009

FLOOD CONTROL DISTRICT OF MARICOPA COUNTY

07 29

White Tanks Flood Retaining Structure #4
An Analysis of the Basis for Unsafe
Spillway Classification, DRAFT
May 27, 1993

WHITE TANKS FRS NO. 4
Hydrologic and Hydraulic Review

Boggs, David B. 1993, "White Tanks F.R.S. No 4 An Analysis of the Unsafe Condition of Spillway Capacity" FCDMC, Hydrology Division, Watershed Management Branck

1.0 DECLASSIFICATION OF THE DAM

- To declassify White Tanks #4 as a dam, the elevation would have to be reduced to 1041 feet, with a storage volume of approximately 600 AF.
- 100 year flood can be contained in the existing structure without spill at a water surface elevation of 1040.8.

2.0 DETERMINATION OF EXISTING SPILLWAY CAPACITY

- PMP determined for 19.3 mi2 – 17.2 inches for the 72-hour general storm and 12.3 for the 6-hour local storm

Return Period	6-hr PMP (cfs)	72-hr PMP
½ PMF Inflow	21,092	13,703 cfs
½ PMF Outflow	11,725	13,575 cfs
½ Volume Inflow	2,445 AF	5,748 AF

- HEC-1 model was modified to eliminate all break-out of flows
- For 11,725 cfs outflow water surface elevation on the spillway– 1054.65 ft.
- For 13,575 cfs outflow water surface elevation on the spillway– 1054.85 ft
- Top of the dam elevation 1056 ft **(*Different from Boggs, 1993 where design elevation is 1055 ft*)**
- 11,725 cfs reservoir elevation = 1055.5 ft leaving 0.5 ft freeboard

Conclusion

- Spillway can safely handle ½ PMF

3.0 CAPACITY TO DELIVER STORMWATER TO THE WHITE TANK STRUCTURE

- The amount of stormwater flow that can reach White Tanks #4 is limited by the existig drainage structures of 1-10 to 8,100 cfs, unless I-10 embankment is overtopped.
- Overtopping I-10 is likely during the PMF flow of 42, 185 cfs
- At Jackrabbit, of the flow going south through the underpass, only 2420 cfs can find its way into the WT#4 structure, the rest of the flow will follow the natural terrain SSE away from the WT# 4 structure
- Even if it has been demonstrated that the WT#4 structure can pass ½ PMF, only part of the ½ PMF flow could gain entrance to the WT#4 structure, further decreases the likelihood of the spillway capacity being inadequate.

APPENDICES

- PMP Calculations
- Spillway Stage-Discharge Calculations
- HEC-1 Model of ½ PMF
- HEC-1 Model of 100- Yr. Flows

White Tanks F.R.S. No. 4
An Analysis of the Unsafe Condition
of Spillway Capacity

RECEIVED
MAY 28
ENGINEERING

Prepared by

Flood Contrtol District of Maricopa County
Hydrology Division
Watershed Management Branch

David B. Boggs, P.E.
Hydrologist

DRAFT

MAY 27 1993

07 29

White Tanks Flood Retaining Structure #4
An Analysis of the Basis for Unsafe
Spillway Classification
May 27, 1993

Table of Contents

List of Tables iii
List of Figures iv

I. DECLASSIFICATION AS A DAM BASED UPON REDUCING THE HEIGHT OF THE STRUCTURE 1

II. DETERMINATION OF EXISTING SPILLWAY CAPACITY 2

III. CAPACITY TO DELIVER STORMWATER TO THE WHITE TANKS STRUCTURE 3..

ANNEX 1 PMP Calculations

ANNEX 2 Spillway Stage-Discharge Calculations

ANNEX 3 HEC-1 Model of 1/2 PMF

ANNEX 4 HEC-1 Model of 100-Yr. Flows

Contour Map

Floodplain Map

Floppy Diskette of HEC-1 Input/Output

List of Tables

Table 1	White Tanks #4 Storage vs Water Surface Elevation	1
Table 2	Values for 1/2 PMF Resulting from Local and General PMP	2
Table 3	Capacity of I-10 Structures to Pass Stormwater into WT#4 Structure	3

List of Figures

Figure 1	ADWR's Definition of a Dam	2
Figure 2	Sub-Basins Used in the HEC-1 Model	4

Hydrologic Analysis of White Tanks #4 Structure

Declassification as a Dam Based upon Reducing the Height of the Structure

The ADWR definition of a dam is that it be greater than 6 feet from the elevation at downstream toe to the spillway crest and that it contain at least 50 acre feet. If the structure contains less than 50 AF it is not considered to be dam, regardless of height. If it is less than 6 feet high, it is not considered to be a dam, regardless of the volume stored. See Figure 1. Since the approximate elevation of undisturbed earth downstream of the structure is 1035.0 ft, declassifying White Tanks Structure #4 would require that the crest elevation be reduced to approximately 1041.00. The stage-storage-discharge data for the structure as determined in the White Tanks ADMS are shown in Table 1.

Table 1: White Tanks #4 Storage vs. Water Surface Elevation

Elev. (ft)	Volume (AF)	Q_{spill} (cfs)
997	0	0
1000	2.8	0
1010	51	0
1020	148	0
1030	227	0
☞ 1040	543	0
1049	1269	0
1050	1396	375
1052	1690	2600
1054	2045	6150
1055	2246	14,700

The data in Table 1 include the borrow pit created during the construction of Interstate 10. By interpolation of the above stage-storage table, the storage available at 1041.0 is approximated at 600 AF. If the White Tanks #4 Structure were to be modified so as to be de-classified as a dam under ADWR's working definition, the structure could be regraded to reduce the height of the structure from 1056 to 1041. According to the ADMS, the 100-year flood can be contained in the existing structure without spill at a water surface elevation of 1040.8, thus protection against the 100-year flood can still be provided by the reduced structure, which would not be considered a dam. The amount of earth to be moved to regrade the embankment to a maximum elevation of 1041.0 is about 150,000 yd^3.

Overtopping of the I-10 embankment is likely during the PMF flow of 42,185 cfs; however, the majority of the stormwater flow reaching the I-10 embankment between Tuthill Road and Jackrabbit Trail will travel eastward along the north side of the I-10 embankment until reaching the Jackrabbit Trail underpass, where most of the flow will go south through the underpass. Some flow will continue east, on the north side of the I-10 embankment, forming a ponding situation, and continuing to move downslope to the east. Of the flow going south through the underpass, only 2420 cfs can find its way into the WT#4 Structure. The rest of the flow (comprising the bulk of the PMF discharge) will follow the natural terrain SSE away from the WT#4 Structure.

It is beyond the scope of this report to make a detailed analysis of the split of flows behind the I-10 embankment, and east of Jackrabbit Trail, but the analysis of spillway capacity presented above shows that the existing spillways should be able to safely pass the 1/2 PMF, even if the entire flow were to enter the WT#4 Structure. The fact that only part of the 1/2 PMF flow *could* gain entrance to the WT#4 Structure further decreases the likelihood of the spillway capacity ever being inadequate.

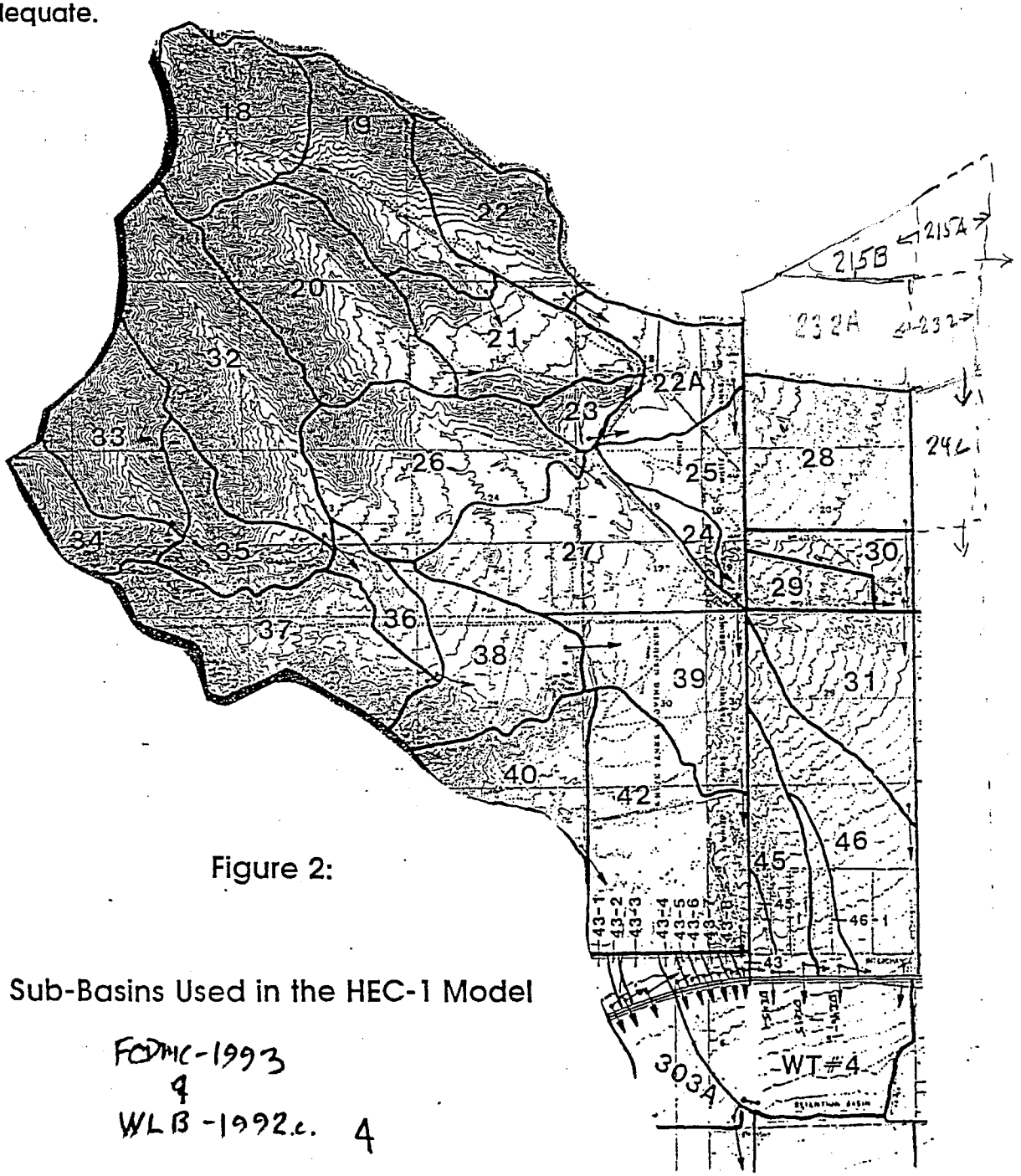

Figure 2:

Sub-Basins Used in the HEC-1 Model

FCDMC-1993
&
WLB-1992c. 4

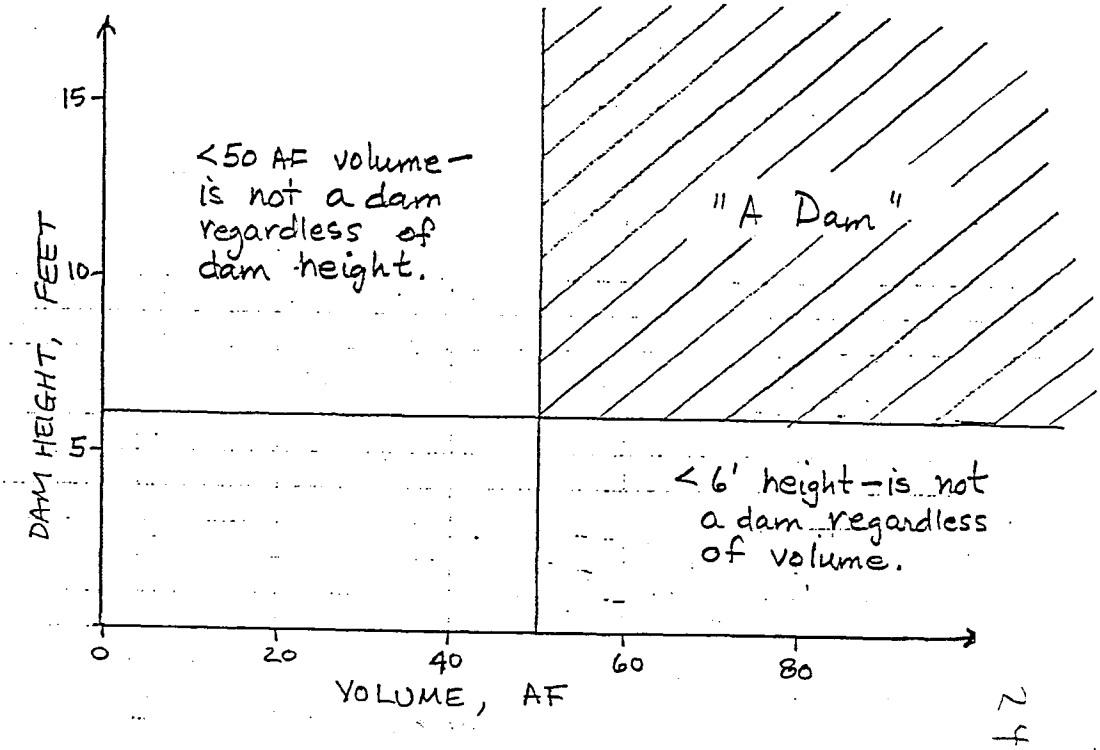

Figure 1: ADWR's Definition of a Dam

Determination of Existing Spillway Capacity

The Probable Maximum Precipitation (PMP) was determined for the 19.3 mi^2 contibutory catchment to be 17.2 inches for the 72-hour general storm and 12.3 inches for the 6-hour local storm. (See Annex for PMP calculations.) When input to the HEC-1 model of the White Tanks ADMS which contributes to Structure #4, these precipitation values gave theresults shown in Table 2.

Table 2: Values for 1/2 PMF Resulting from Local and General PMP

Dam Crest Elev
Design 1056.0

	Q	WSEL	Q	WSEL	Freeboard
	6-hr PMP		72-hr PMP		
1/2 PMF Inflow	21,092 cfs		13,703 cfs		
1/2 PMF Outflow	11,725 cfs	1054.65	13,575 cfs	1054.85	
1/2 Volume Inflow	2,445 AF		5,748 AF		

It should be noted that the HEC-1 model has been modified to eliminate all break-out of flows, and thus *all* of the runoff is assumed to enter the White Tanks #4 Structure. As shown in Table 2, the 1/2 PMF is 11,725 cfs for the local 6-hr. storm and 13,575 cfs for the 72-hr. general storm. The HEC-1 model results of the 1/2 PMF modeling show that the 11,725 cfs discharge will reach a water surface elevation of 1054.65 ft. on the spillway. The 13,575 cfs discharge will reach a water surface elevation of 1054.85 ft. In the WLB study, the spillway crest is modeled at an elevation of 1049.00, and dam Top 1055.0

Previous studies, including the Ertec Report of 1981 (*Phase I Inspection Report for White Tanks Retarding Dam No. 4, ID No. AZ00109, Maricopa County, Arizona*) have used 1050.0 as the spillway crest elevation, and 1056.0 as the elevation of the top of dam. For consistency, 1050.0 is used as the crest elevation of each spillway. Consistent with the Ertec Report, each spillway is taken as 165 ft bottom width, with 1:1 trapezoidal side slopes. The crest is level for 40 feet, then slopes at 0.003 ft/ft. The spillways are analyzed as broad-crested weirs. The calculations are contained in an annex to this report. A sketch is also provided in the annex.

The results of the analysis show that the 1/2 PMF of 11, 725 cfs will pass through the spillways when the water surface elevation in the reservoir reaches an elevation of 1055.5, thus leaving 0.5 ft as freeboard. If the velocity head is added at the spillway, the total energy line reaches an elevation of 1056.2 when flows reach 11,725 cfs. See the Annex for calculations and graphical presentation of results.

The results indicate that the spillways can safely handle the 1/2 PMF, and that the dam should not be considered unsafe for inadequate spillway capacity.

Capacity to Deliver Stormwater to the White Tank Structure.

Since White Tanks Structure #4 is located south of I-10, all stormwater flows reaching the structure must pass under I-10 first. The capacity of the I-10 drainage structures is summarized in the Table 3.

Table 3: Capacity of I-10 Structures to Pass Stormwater into WT#4 Structure

Location	Qp (cfs) for 100-Yr	Qp (cfs) at Capacity of Structure*
West of Tuthill Road	4061	4644
East of Tuthill Road	325	610
199th Avenue	330	392
197th Avenue	118	224
Jackrabbit Trail	1186	2420
Total	6020	8100

* These values are presented in WLB's White Tanks ADMS HEC-1 diversion cards. The capacity of the underpass at Jackrabbit Trail to allow stormwater to flow south of I-10 is much greater than 2420 cfs. The 2420 cfs is the maximum rating of flow that can enter the White Tanks #4 Structure. Flows in excess of 2420 cfs will break-out to the east of Jackrabbit Trail, and they will not enter the White Tanks #4 Structure. Although there are plans to inprove the inlet channel to the White Tanks #4 Structure, the design capacity of the inlet channel is going to be the 100-yr flow of 2206 cfs.

Thus the actual amount of stormwater flow that can reach the White Tanks #4 Structure is limited by the existing drainage structures of I-10 to 8100 cfs. unless the I-10 embankment is overtopped.

Overtopping of the I-10 embankment is likely during the PMF flow of 42,185 cfs; however, the majority of the stormwater flow reaching the I-10 embankment between Tuthill Road and Jackrabbit Trail will travel eastward along the north side of the I-10 embankment until reaching the Jackrabbit Trail underpass, where most of the flow will go south through the underpass. Some flow will continue east, on the north side of the I-10 embankment, forming a ponding situation, and continuing to move downslope to the east. Of the flow going south through the underpass, only 2420 cfs can find its way into the WT#4 Structure. The rest of the flow (comprising the bulk of the PMF discharge) will follow the natural terrain SSE away from the WT#4 Structure.

It is beyond the scope of this report to make a detailed analysis of the split of flows behind the I-10 embankment, and east of Jackrabbit Trail, but the analysis of spillway capacity presented above shows that the existing spillways should be able to safely pass the 1/2 PMF, even if the entire flow were to enter the WT#4 Structure. The fact that only part of the 1/2 PMF flow *could* gain entrance to the WT#4 Structure further decreases the likelihood of the spillway capacity ever being inadequate.

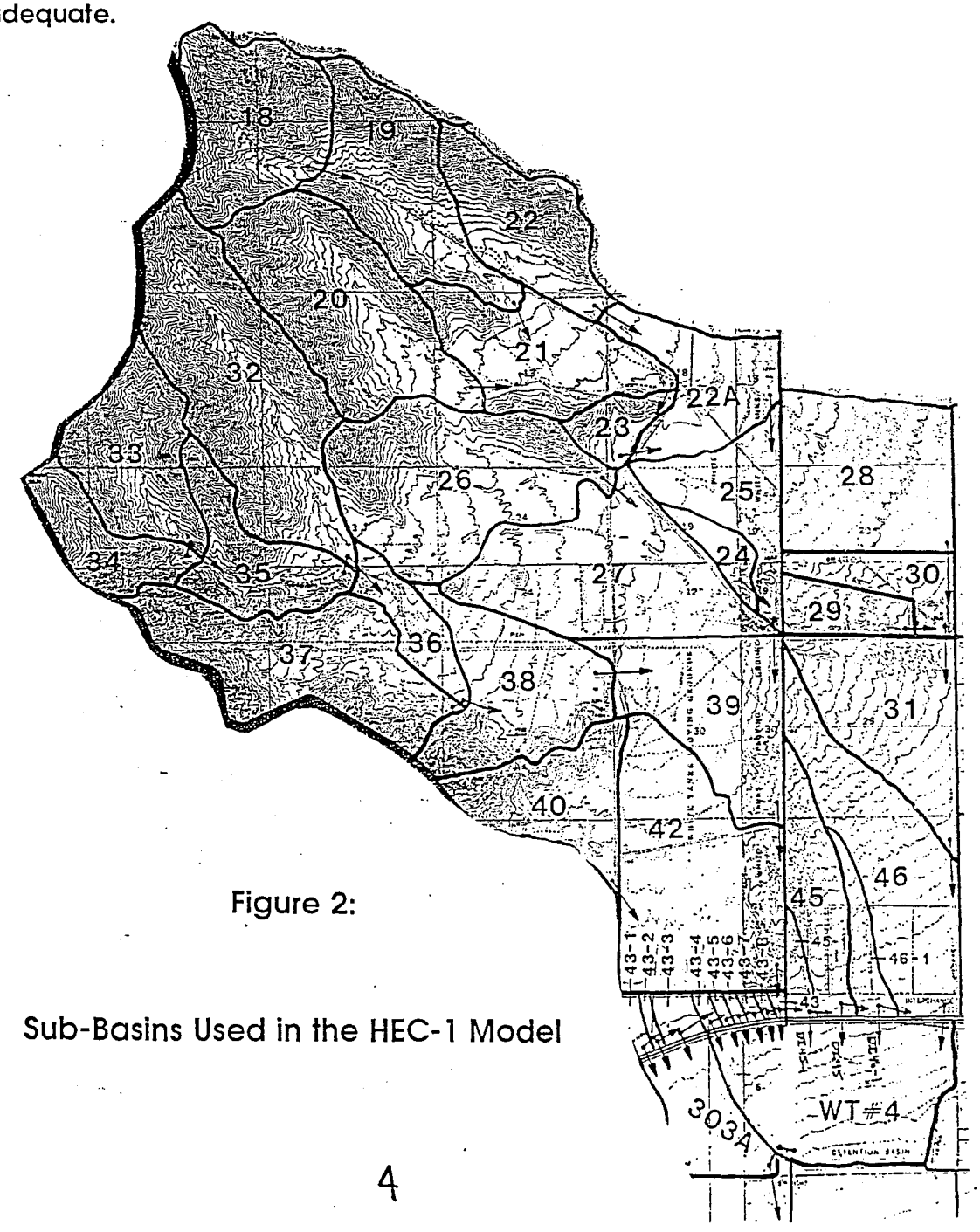

Figure 2:

Sub-Basins Used in the HEC-1 Model

PMP Calculations

Table 6.[illegible]--General-storm PMP computations for the Colorado River and Great basin

Drainage White Tanks #4 Area 19.3 mi^2 (km^2)

Latitude 33.5°N, Longitude 132.5°W of basin center

Month August

Step	Duration (hrs) 6	12	18	24	48	72
A. Convergence PMP						
1. Drainage average value from one of figures 2.5 to 2.16	13.8 in. (mm)					
2. Reduction for barrier-elevation [fig. 2.18]	88 %					
3. Barrier-elevation reduced PMP [step 1 X step 2]	12.14 in. (mm)					
4. Durational variation [figs. 2.25 to 2.27 and table 2.7].	75	89	96	100	112	116 %
5. Convergence PMP for indicated durations [steps 3 X 4]	9.1	10.8	11.7	12.1	13.6	14.1 in. (mm)
6. Incremental 10 mi^2 (26 km^2) PMP [successive subtraction in step 5]	9.1	1.7	0.9	0.4	1.5	0.5 in. (mm)
7. Areal reduction [select from figs. 2.28 and 2.29]	99	100	100	100	100	100 %
8. Areally reduced PMP [step 6 X step 7]	9.01"	1.7"	0.9"	0.4"	1.5"	0.5" in. (mm)
9. Drainage average PMP [accumulated values of step 8]	9.01"	10.7"	11.6"	12.0"	13.5"	14.0" in. (mm)
B. Orographic PMP						
1. Drainage average orographic index from figure 3.11a to d. (REVISED)	1 2 in. (mm)					
2. Areal reduction [figure 3.20]	98.75 %					
3. Adjustment for month [one of figs. 3.12 to 3.17]	100 %					
4. Areally and seasonally adjusted PMP [steps 1 X 2 X 3]	1.98 in. (mm)					
5. Durational variation [table ~~3.6~~ 3.9]	35.5	63	84	100	141	160%
6. Orographic PMP for given durations [steps 4 X 5]	.7"	1.2"	1.7"	1.98"	2.8"	3.2" in. (mm)
C. Total PMP						
1. Add steps A9 and B6	9.7"	11.9"	13.3"	14.0"	16.3"	17.2" in. (mm)

2. PMP for other durations from smooth curve fitted to plot of computed data.

3. Comparison with local-storm PMP (see sec. 6.3).

Table 6.3A.--Local-storm PMP computation, Colorado River, Great Basin and California drainages. For drainage average depth PMP. Go to table 6.3B if areal variation is required.

Drainage White Tanks #4 Structure Area 19.3 mi^2 (km^2)
Latitude 33.5 N Longitude 132.5 W Minimum Elevation 1000 ft (m)

Steps correspond to those in sec. 6.3A.

1. Average 1-hr 1-mi^2 (2.6-km^2) PMP for drainage [fig. 4.5]. 11.5 in. (~~mm~~)

2. a. Reduction for elevation. [No adjustment for elevations up to 5,000 feet (1,524 m): 5% decrease per 1,000 feet (305 m) above 5,000 feet (1,524 m)]. 100 %

   b. Multiply step 1 by step 2a. 11.5 in. (~~mm~~)

3. Average 6/1-hr ratio for drainage [fig. 4.7]. 1.3

	Duration (hr)								
	1/4	1/2	3/4	1	2	3	4	5	6
4. Durational variation for 6/1-hr ratio of step 3 [table 4.4].	74	89	95	100	114	121	125	128	130 %
5. 1-mi^2 (2.6-km^2) PMP for indicated durations [step 2b X step 4].	8.5	10.2	10.9	11.5	13.1	13.9	14.4	14.7	15.0 in. (~~mm~~)
6. Areal reduction [fig. 4.9].	.63	.69	.72	.74	.77	.78	.80	.81	.82 %
7. Areal reduced PMP [steps 5 X 6].	5.4"	7.0"	7.8"	8.5"	10.1"	10.8"	11.5"	11.9"	12.3" in. (~~mm~~)
8. Incremental PMP [successive subtraction in step 7].				8.5"	1.6"	0.7"	0.7"	0.4"	0.4" in. (~~mm~~)
	5.4"	1.6"	0.8"	0.7" } 15-min. increments					

9. Time sequence of incremental PMP according to:

   Hourly increments [table 4.7]. 0.4" 0.7" 8.5" 1.6" 0.7" 0.4" in. (~~mm~~) HMR-No 51

   Four largest 15-min. increments [table 4.8]. 5.4" 1.6" 0.8" 0.7" in. (~~mm~~)

(1.) Determine 1000 mb 24 convergence PMP for 10 mi² watershed.

					Step (3) Value
a.	Fig 2.5.	— January	—	8.9	7.83
b.	Fig 2.6	Feb.	—	8.8	7.74
c.	2.7	Mar.	—	8.7	7.66
d	2.8	April	—	8.5	7.48
e.	2.9	May	—	8.5	7.48
f.	2.10	June	—	8.6	7.56
g.	2.11	July	—	12.5	11.00
h.	2.12	Aug	—	13.8	12.14
i.	2.13	Sept	—	13.8	12.14
j.	2.14	Oct.	—	12.6	11.09
k.	2.15	Nov.	—	10.2	8.98
l.	2.16	Dec.	—	9.3	8.18

(2) Obtain reduction factor for effective barrier + elevation in percent from Fig. 2.18.

Value = 88%

(3) Barrier elevation reduced 24-hr. 10-mi² convergence PMP average = (1) * (2).

For Aug/Sept = (13.8)(0.88) = 12.144

For Apr/May = (8.5)(0.88) = 7.48

(4) Determine drainage 6/24-hr. ratio for month of interest from Fig. 2.25 + 2.27

Table 27 Values.

			6 hr.	12 hr.	18 hr.	24 hr.	48 hr.	72 hr.
(a)	Jan	— 64%						
(b)	Feb	— 64%	64	83	93	100	117	126
(c)	Mar.	— 66%	66	84	93	100	116	124
(d)	Apr.	— 67%	67	85	94	100	116	123
(e)	May	— 69%	69	86	94	100	115	121
(f)	June	— 72%	72	88	95	100	113	118
(g)	July	— 75%						
(h)	Aug	— 75%	75	89	96	100	112	116
(i)	Sept	— 75%						
(j)	Oct	— 72%	72	88	95	100	113	118
(k)	Nov.	— 65%	65	84	93	100	117	125
(l)	Dec.	— 63%	63	82	93	100	118	128

42-381 50 SHEETS EYE-EASE® 5 SQUARE
42-382 100 SHEETS EYE-EASE® 5 SQUARE
42-389 200 SHEETS EYE-EASE® 5 SQUARE
42-392 100 RECYCLED WHITE 5 SQUARE
42-399 200 RECYCLED WHITE 5 SQUARE
Made in U.S.A.
National® Brand

(5) Step (3) value * Step (4) value → convergence PMP for durations of Step (4) for 10 mi²

	6 hr.	Areally Reduced, Step (7) ↓ 12 hr.	18 hr.	24 hr.	48 hr.	72 hr.
Jan	5.0112 (4.96)	6.4989	7.2819	7.830	9.1611	9.8658
Feb.	5.108 (5.06)	6.5016	7.1982	7.740	8.9784	9.5976
Mar.	5.132 (5.08)	6.5110	7.2004	7.660	8.8856	9.4218
Apr.	5.0116 (4.10)	6.358	7.0312	7.480	8.6768	9.2004
May	5.161 (5.11)	6.4328	7.0312	7.48	8.602	9.0508
Jun	5.443 (5.39)	6.6528	7.182	7.56	8.5428	8.9208
Jul	8.25 (8.17)	9.790	10.56	11.00	12.320	12.760
Aug	9.105 (9.01)	10.8046	11.6544	12.14	13.5968	14.0824
Sept	9.105 (9.01)	10.8046	11.6544	12.14	13.5968	14.0824
Oct	7.984 (7.90)	9.7592	10.5355	11.09	12.5317	14.7874
Nov.	5.837 (5.78)	7.5432	8.3514	8.98	10.5066	11.225
Dec.	5.153 (5.10)	6.7076	7.6074	8.18	9.6524	10.4704

(6) Incremental convergence PMP obtained by successive subtraction (not req'd)

(7) Areal Reduction for Drainage = 19.3 mi², From Fig. 2.28-2.29

	6 hr.	12 hr.	18 hr.	24 hr.
Jan - Mar.	.99	1.0	1.0	1.0
April	.99	1.0	1.0	1.0
May	.99	1.0	1.0	1.0
Jun - July	.99	1.0	1.0	1.0
Aug - Sept.	.99	1.0	1.0	1.0
Oct.	.99	1.0	1.0	1.0
Nov - Dec.	.99	1.0	1.0	1.0

These areal reduction factors for the 6-hr duration are included as a separate column in Step (5); all other durations, the factor is near enough to 1.0 to ignore areal reduction for a 19.3 mi² drainage area.

42-381 50 SHEETS EYE-EASE® 5 SQUARE
42-382 100 SHEETS EYE-EASE® 5 SQUARE
42-389 200 SHEETS EYE-EASE® 5 SQUARE
42-392 100 RECYCLED WHITE 5 SQUARE
42-399 200 RECYCLED WHITE 5 SQUARE
Made in U.S.A.
National® Brand

(8) Drainage average PMP (d.a. = 19.3 mi²)

	6 hr.	12 hr.	18 hr.	24 hr.	48 hr.	72 hr.
Aug/Sept.	9.01"	10.80"	11.65"	12.14"	13.60"	14.02"

(B) (1) The orographic index for the 10-mi², 24-hr. PMP given on Fig. 3.11d in "2"

(2) Areal Reduction from Figure 3.20 = $\boxed{0.9875}$

(3) Seasonal adjustment for Orographic PMP.

Jan	88%	Jul	82.5%
Feb.	87%	Aug	100%
Mar.	82%	Sept	100%
Apr	72%	Oct	99%
May	63%	Nov	94%
Jun.	63%	Dec.	89%

(4) Areally + Seasonally adjusted PMP (inches) = (1) * (2) * (3).

Jan	1.738"	July	1.629"
Feb.	1.718"	Aug	1.975"
Mar.	1.620"	Sept	1.975"
Apr.	1.422"	Oct	1.955"
May	1.244"	Nov.	1.857"
Jun	1.244"	Dec.	1.758"

(5) Durational Variation for Lat. 33.5° N Long. 112.5° W

6 hr.	12 hr.	18 hr.	24 hr.	48 hr.	72-hr.
35.5	62.5	83.5	100	141	159.5

(6) Orographic PMP (inches)

	6 hr.	12 hr.	18 hr.	24-hr.	48 hr.	72 hr.
Jan.				1.738		
Feb.				1.718"		
Mar.				1.620"		
Apr.				1.422		
May				1.244"		
Jun.				1.244"		
July				1.629"		
Aug/Sept	0.70"	1.23"	1.65"	1.975"	2.78"	3.15"
Oct				1.955"		
Nov				1.857"		
				1.758"		

42-381 50 SHEETS EYE-EASE® 5 SQUARE
42-382 100 SHEETS EYE-EASE® 5 SQUARE
42-389 200 SHEETS EYE-EASE® 5 SQUARE
42-392 100 RECYCLED WHITE 5 SQUARE
42-399 200 RECYCLED WHITE 5 SQUARE
Made in U.S.A.
National® Brand

① Total PMP (Aug/Sept)

	6 hr	12 hr.	18 hr	24 hr.	48 hr.	72 hr.
A-9 =	9.01"	10.80"	11.65"	12.14"	13.60"	14.08"
B.6 =	0.70"	1.23	1.65	1.98	2.78	3.15"
	9.71"	12.03"	13.30"	14.12"	16.38"	17.23"

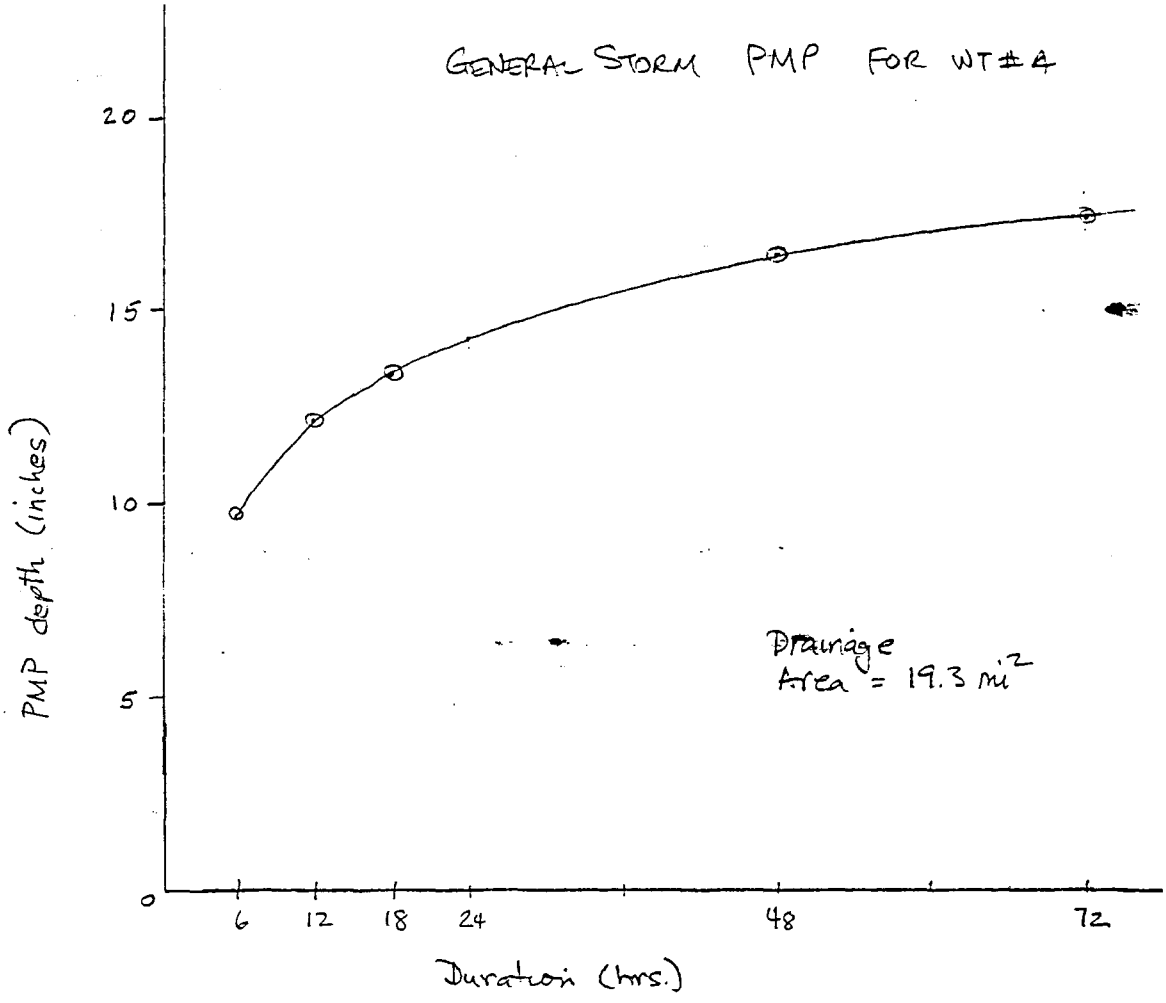

42-381 50 SHEETS EYE-EASE® 5 SQUARE
42-382 100 SHEETS EYE-EASE® 5 SQUARE
42-389 200 SHEETS EYE-EASE® 5 SQUARE
42-392 100 RECYCLED WHITE 5 SQUARE
42-399 200 RECYCLED WHITE 5 SQUARE
Made in U.S.A.
National® Brand

Use the 72-hr. general storm

hour	PMP (in)	Δ/period	Δ/6 hrs
6	9.7	9.7	9.7
12	11.9	2.2	2.2
18	13.3	1.4	1.4
24	14.0	0.7	0.7
48	16.3	2.3	0.575
72	17.2	0.9	0.225

Rank	Ant. (in)
1	9.7
2	2.2
3	1.4
4	0.7
5	0.575
6	0.575
7	0.575
8	0.575
9	0.225
10	0.225
11	0.225
12	0.225

Use temporal distribution on $\boxed{\text{Figure 6-1a}}$ in HMR-49

Period	From	To	Rank	P(in)	P(in/hr)
1	0	6 hrs	9	0.225	0.0375 ✓
2	6	12	7	0.575	$0.0958\overline{3}$ ✓
3	12	18	5	0.575	$0.0958\overline{3}$ ✓
4	18	24	3	1.400	$0.233\overline{3}$ ✓
5	24	30	1	9.700	$1.616\overline{6}$ ✓
6	30	36	2	2.200	$0.366\overline{6}$ ✓
7	36	42	4	0.700	$0.166\overline{6}$ ✓
8	42	48	6	0.575	$0.0958\overline{3}$ ✓
9	48	54	8	0.575	$0.0958\overline{3}$ ✓
10	54	60	10	0.225	0.0375
11	60	66	11	0.225	0.0375
12	66	72	12	0.225	0.0375

Summarization Precip

Hr	P (in) Cum	%	Hr		Cum %
1	.0375	.0022	37	14.841̄6	.8529
2	.0750	.0044	38	15.0083	.8756
3	.1125	.0065	39	15.175	.8825
4	.1500	.0087	40	15.341̄6	.8920
5	.1875	.0109	41	15.3583	.8929
6	.2250	.0131	42	15.375	.8939
7	.3208	.0187	43	15.4708̄3	.8995
8	.416̄6	.0242	44	15.5̄	.9050
9	.5125	.0298	45	15.6625	.9106
10	.6083	.0354	46	15.7583	.9162
11	.70416	.0409	47	15.8542	.9218
12	0.800	.0465	48	15.950	.9273
13	.89583	.0521	49	16.0458	.9329
14	.99166	.0577	50	16.141̄6	.9385
15	1.0875	.0632	51	16.2375	.9440
16	1.183̄3	.0688	52	16.3̄3	.9496
17	1.2791̄6	.0744	53	16.4291̄6	.9552
18	1.375	.0799	54	16.525	.9608
19	1.6083	.0935	55	16.5625	.9629
20	1.841̄6	.1071	56	16.6000	.9651
21	2.075	.1206	57	16.6375	.9673
22	2.308̄3	.1342	58	16.675	.9695
23	2.541̄6	.1478	59	16.7125	.9717
24	2.775	.1613	60	16.750	.9738
25	4.391̄6	.2553	61	16.7875	.9760
26	6.0083	.3493	62	16.825	.9782
27	7.625	.4433	63	16.8625	.9804
28	9.241̄6	.5373	64	16.9000	.9825
29	10.8583	.6313	65	16.9375	.9847
30	12.475	.7253	66	16.975	.9869
31	12.841̄6	.7466	67	17.0125	.9891
32	13.2083	.7679	68	17.050	.9913
33	13.575	.7892	69	17.0875	.9935
34	13.941̄6	.8106	70	17.125	.9956
35	14.3083	.8319	71	17.1625	.9978
36	14.675	.8532	72	17.200	1.0

42-381 50 SHEETS EYE-EASE® 5 SQUARE
42-382 100 SHEETS EYE-EASE® 5 SQUARE
42-389 200 SHEETS EYE-EASE® 5 SQUARE
42-392 100 RECYCLED WHITE 5 SQUARE
42-399 200 RECYCLED WHITE 5 SQUARE
Made in U.S.A.
National® Brand

27 43,560 / 27

1 AF = 100 / 23 / 6800

Results of the PMP Analysis

STORAGE VOL (EXISTING) = **2246 AF**

		6-hour Local PMP	72-hour General PMP
Depth of Precip.		12.30"	17.20"
Q_p inflow to WT#4		42,185 cfs	27,405 cfs
T_p		3.58 hrs.	29.75 hrs.
Vol of Inflow (AF)	(6HR)	2255	4746
	(24 HR)	2445	5643
	(72 HR)	2445	5748

LOCATIONS OF WARNING MESSAGES IN PMF OUTPUT (FILE WT4PMPT)

K'K Block	DI or SQ Ex Max	Reg Max
	4212	13,700
	2420	15,700
	2772	12,000
	7028	10,000
	503	4850
	2310	2765
	5172	27,105
	186	2045
	892	2283
	276	2450
	906	2550
	951	2950
	3318	3644
	~~222~~	3815

K'K Block	DI or SQ Exist	Reg Max
	~~1054~~	4690
	~~1219~~	4280
	28,617	58,496
	~~43,500~~	58,815
	15,208	50,215
	~~6550~~	26,820
	10,999	22,850
	3324	16,690
	12,363	21,050
	~~4,546~~	12,037
	~~2275~~	6090
	4138	6950
	679	5750
	~~2000~~	1,400
	3244	3515
	~~2463~~	3360
	9959	10,650

Stage/Storage
per WLB HEC-1

SE	SV	SQ	
997	0	0	
1000	2.81	0	
1010	51	0	
1020	148	0	
1030	277	0	
1040	543	0	← pit. (Below Grade)
1049	1269	0	
1050	1396	375	
1052	1690	2600	
1054	2045	6150	
1055	2246	14700	

Brief Analysis of Storage

① Downstream Elevation ≈ 1034.0
② Add 6 ft (allowable) 6.0
③ 1040.0 ← elevation at which it is no longer a dam.
④ Storage available below 1040 = 543 AF
⑤ Volume Req'd to contain ½ PMF from:

	6-hour local storm	72-hr. general storm
	2445 AF (Q=11,725)	5748 AF (Q = 13,575 cfs)
⑥	1902 AF	5205 AF
⑦ Cost	$9,205,680	$25,192,2000

Spillway Stage-Discharge Calculations

FLOOD CONTROL DISTRICT OF MARICOPA COUNTY

PROJECT White Tanks #4 F.R.S. PAGE 1 OF

DETAIL Spillway Capacity COMPUTED DBB DATE 5/26/93

CHECKED BY DATE

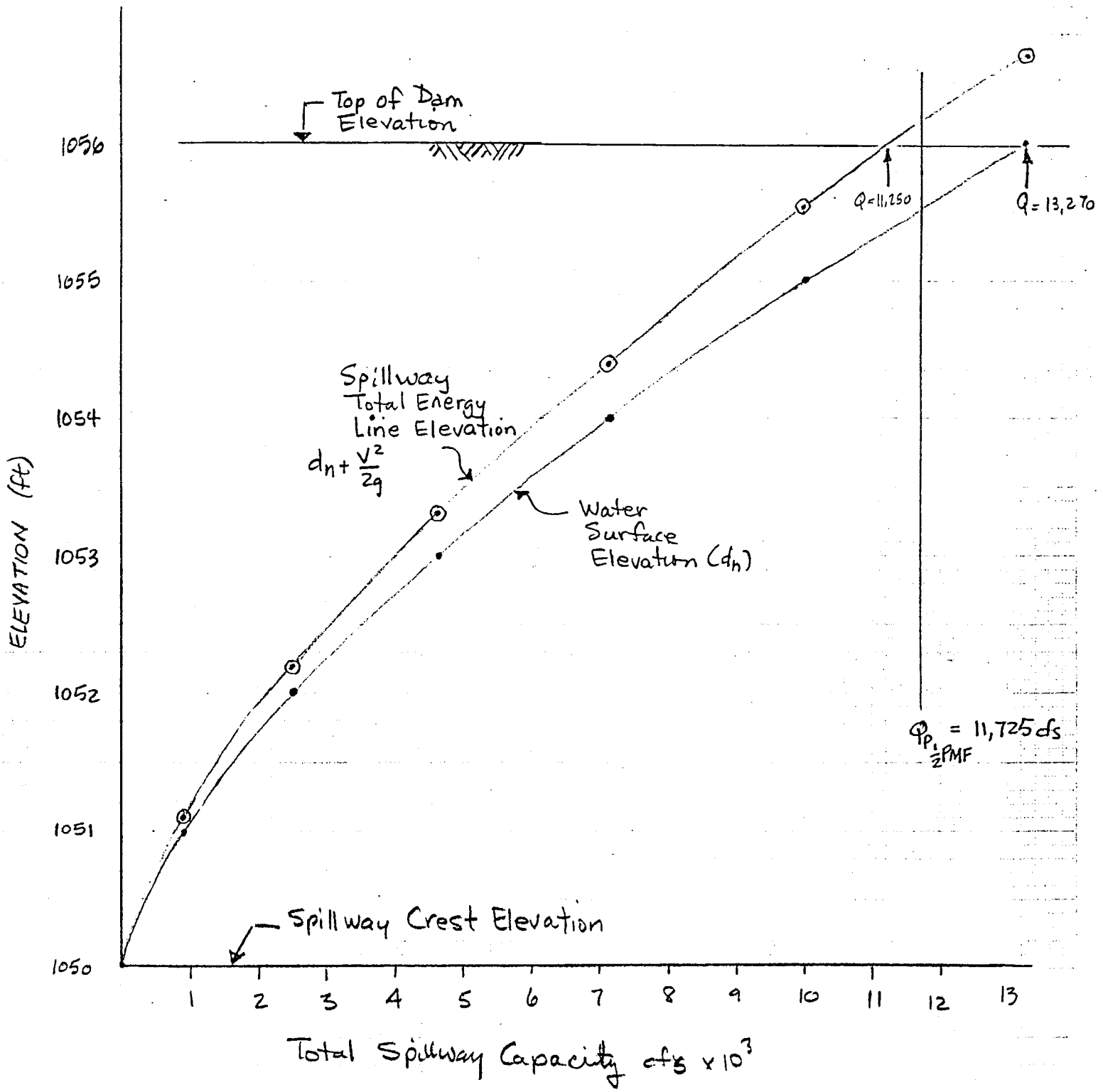

White Tanks Spillways

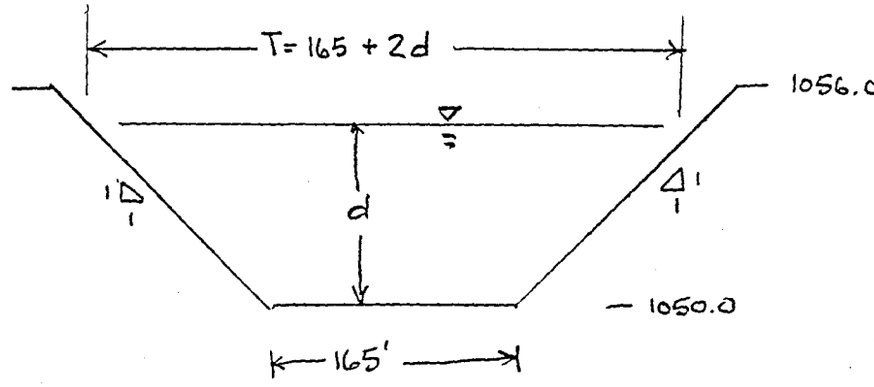

$L_{ave} = 165 + d$

$A = L_{ave} * d$

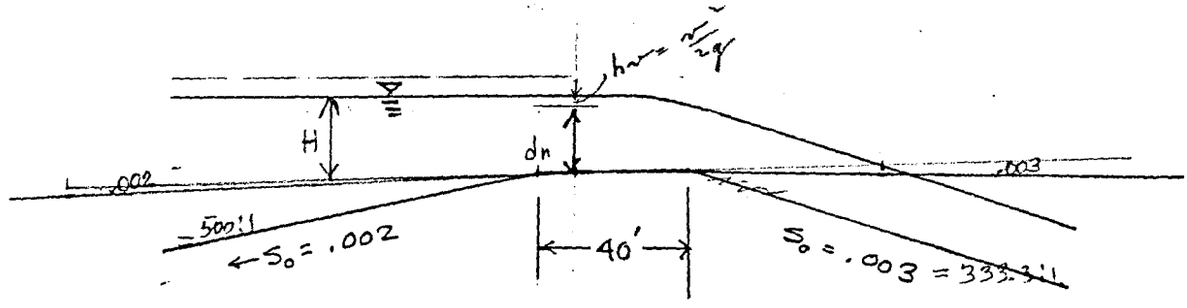

Use Broad crested weir approximation as per Brater + King, $Q = C L H^{3/2}$, take $C = 2.64$, $L = 165'$

$H = h_v + d_n$

ELEV (ft)	DEPTH (ft)	AREA (ft^2)	L_{ave} (ft)	Q (cfs)	Vel (ft/sec)	h_v (ft)	$ELEV_{max}$ (ft)
1050	0	0	165	0	0	—	1050
1051	1	166	166	438	2.64	.11	1051.11
1052	2	334	167	1247	3.73	.22	1052.22
1053	3	504	168	2305	4.57	.32	1053.32
1054	4	676	169	3569	5.28	.43	1054.43
1055	5	850	170	5018	5.90	.54	1055.54
1055.5	5.5	926	170.5	5806	6.27	.61	1056.11
1056	6	1026	171	6635	6.47	.65	1056.65
1055.4	5.4	920	170.4	5645	6.13	.58	1055.98

HEC-1 Model of 1/2-PMF

```
1*************************************                    *************************************
*                                   *                    *                                   *
*  FLOOD HYDROGRAPH PACKAGE (HEC-1) *                    *      U.S. ARMY CORPS OF ENGINEERS *
*        SEPTEMBER 1990             *                    *   HYDROLOGIC ENGINEERING CENTER   *
*         VERSION 4.0               *                    *        609 SECOND STREET          *
*                                   *                    *     DAVIS, CALIFORNIA 95616       *
* RUN DATE 04/21/1993  TIME 15:33:22 *                    *          (916) 756-1104           *
*                                   *                    *                                   *
*************************************                    *************************************
```

```
X   X XXXXXXX  XXXXX      X
X   X X    X   X     XX
X   X X    X         X
XXXXXXX XXXX   X    XXXXX  X
X   X X    X         X
X   X X    X   X     X
X   X XXXXXXX  XXXXX     XXX
```

THIS PROGRAM REPLACES ALL PREVIOUS VERSIONS OF HEC-1 KNOWN AS HEC1 (JAN 73), HEC1GS, HEC1DB, AND HEC1KW.

THE DEFINITIONS OF VARIABLES -RTIMP- AND -RTIOR- HAVE CHANGED FROM THOSE USED WITH THE 1973-STYLE INPUT STRUCTURE.
THE DEFINITION OF -AMSKK- ON RM-CARD WAS CHANGED WITH REVISIONS DATED 28 SEP 81. THIS IS THE FORTRAN77 VERSION
NEW OPTIONS: DAMBREAK OUTFLOW SUBMERGENCE , SINGLE EVENT DAMAGE CALCULATION, DSS:WRITE STAGE FREQUENCY,
DSS:READ TIME SERIES AT DESIRED CALCULATION INTERVAL LOSS RATE:GREEN AND AMPT INFILTRATION
KINEMATIC WAVE: NEW FINITE DIFFERENCE ALGORITHM

```
1                                HEC-1 INPUT                                PAGE  1

  LINE        ID.......1.......2.......3.......4.......5.......6.......7.......8.......9......10

    1         ID
    2         ID
    3         ID     HYDROLOGY RUN FOR WHITE TANKS ADMS --- WATERSHED CONTRIBUTING TO WT#4

    5         ID     NO BREAKOUTAT TUTHILL DIKE OR ALONG JACKRABBIT TRAIL. ALL FLOW IS
    6         ID     CONVEYED TO   WT#4.
    7         ID
    8         ID        RAINFALL OF PMP 6-HOUR LOCAL STORM AS PER HYDRO-49 PROCEDURE
    9         ID
              *DIAGRAM
   10         IT     5          300
   11         IO     5
   12         IN    15

   13         KK     18     THE FIRST SUBASIN IN THIS MODEL IS 18
   14         KM        PMP = 12.3 INCHES IN 6 HOURS
   15         PB   12.30
   16         PC      0  .00813  .01626  .02439  .03252  .04672  .06092  .07512  .08932  .52832
   17         PC  .65842  .72342  .78032  .81282  .84532  .87782  .91032  .92454  .93872  .95292
   18         PC  .96712  .97525  .98338  .99151  1.0000
   19         KM        RUNOFF HYDROGRAPH FROM SUB-BASIN 18.
   20         BA    .81
   21         LG    .20    .34   3.25   1.12   9.50
   22         UI   213.   719.  1128.  1731.  1159.   722.   301.   171.    49.    47.
   23         UI     0.     0.     0.     0.     0.     0.     0.     0.     0.     0.
   24         UI     0.     0.     0.     0.     0.     0.     0.     0.     0.     0.

   25         KK    R18
   26         KM       ROUTE FLOW FROM CP18 TO CP19.
   27         RS     2          -1     0
   28         RC    .08    .05    .08   7800  .0615
   29         RX   1000   1030   1080   1097   1120   1140   1205   1218
   30         RY   1520   1518   1514   1510   1510   1512   1518   1520
```

```
31      KK    19
32      KM      RUNOFF HYDROGRAPH FROM SUB-BASIN 19.
33   2  BA   .79
34      LG   .19   .33   3.31   1.07   8.70
35      UI   84.   195.   385.   496.   632.   936.   940.   708.   553.   427.
36      UI   278.   147.   120.   84.   32.   26.   26.   26.   0.   0.
37      UI   0.   0.   0.   0.   0.   0.   0.   0.   0.   0.

38      KK   CP19
39      KM      ADD HYDROGRAPHS AT CP19.
40      HC     2

41      KK    R19
2 42    KM      ROUTE COMBINED HYDROGRPAH AT CP19 TO CP21.        2
43      RS     2          -1     0
44      RC    .06    .04    .06   5772  .0246
45      RX   1000   1010   1025   1040   1055   1069   1080   1100
46      RY   1466   1464   1460   1458   1458   1460   1466   1467
1                          HEC-1 INPUT                          PAGE 2

LINE        ID.......1.......2.......3.......4.......5.......6.......7.......8.......9......10


47      KK    21
48      KM      RUNOFF HYDROGRAPH FROM SUB-BASIN 21.
49   3  BA   .79
50      LG   .19   .31   3.81   .78   4.70
51      UI   84.   191.   380.   491.   623.   915.   948.   711.   558.   430.
52      UI   291.   149.   124.   84.   37.   26.   26.   26.   0.   0.
53      UI   0.   0.   0.   0.   0.   0.   0.   0.   0.   0.

54      KK  I1CP21
55      KM      ADD HYDROGRAPHS AT CP21.
56      HC     2

57      KK    20
58      KM      RUNOFF HYDROGRAPH FROM SUB-BASIN 20.
59   4  BA   1.07
60      LG   .19   .33   3.33   1.05   8.40
61      UI   119.   294.   560.   721.   938.   1414.   1211.   931.   714.   535.
62      UI   286.   200.   132.   83.   36.   36.   36.   36.   0.   0.
63      UI   0.   0.   0.   0.   0.   0.   0.   0.   0.   0.

64      KK   SR20
S1 65   KM      STORAGE ROUTE THROUGH RETENTION BASIN AT CP20.
66      RS     1   STOR     0     0
67      SV     0   1.05   9.43   26.91   54.31   92.89   138.67   176.47   190.08   219.05
68      SV   249.57
69      SQ     0     0     0     0     0     0     0     0   265   1377
70      SQ   2963
71      SE   1443   1446   1450   1454   1458   1462   1466   1469   1470   1472
72      SE   1474

73      KK    R20
3 74    KM      ROUTE REMAINDER OF FLOW AT CP20  TO CP21
75      RS     4          -1     0
76      RC    .06   .045    .06   6240  .0208
77      RX   1000   1012   1025   1032   1050   1057   1070   1092
78      RY   1424   1422   1420   1418   1418   1420   1422   1424

79      KK   CP21
80      KM      ADD HYDROGRAPHS AT CP21.
81      HC     2

82      KK   SR21
S2 83   KM      STORAGE ROUTE THROUGH RETENTION BASIN AT CP21
84      RS     1   STOR     0     0
85      SV     0    .68   20.68   57.58   95.91   102.34   117.65   130
86      SQ     0     0     0     0     0   265   1377   2000
87      SE   1319   1320   1330   1340   1347   1348   1350   1351
```

```
 88      KK    R21
 89      KM      ROUTE REMAINDER OF FLOW AT CP21 TO CP23
 90      RS     1          -1     0
 91      RC    .03    .03    .05   2340   .0196
 92      RX   1000   1030   1050   1070   1145   1212   1225   1250
 93      RY   1310   1306   1304   1302   1302   1304   1306   1310
1                              HEC-1 INPUT                          PAGE  3

LINE      ID.......1.......2.......3.......4.......5.......6.......7.......8.......9......10


 94      KK    23
 95      KM      RUNOFF HYDROGRAPH FROM SUB-BASIN 23.
 96      BA    .16
 97      LG    .18    .32   4.04    .65  10.60
 98      UI   111.   327.   471.   228.    68.    20.     0.     0.     0.     0.
 99      UI     0.     0.     0.     0.     0.     0.     0.     0.     0.     0.

100      KK   CP23
101      KM      ADD HYDROGRAPHS AT CP23
102      HC     2

103      KK   SR23
104      KM      STORAGE ROUTE THROUGH RETENTION BASIN AT CP23.
105      RS     1   STOR     0     0
106      SV     0   6.04   20.38   53.82  120.38  216.24  325.98  455.42   606.1  645.49
107      SV  685.61  767.98
108      SQ     0     0     0     0     0     0     0     0     0     0
109      SQ   928   8950
110      SE  1272   1276  1280   1284   1288   1292   1296   1300   1304   1305
111      SE  1306   1308

112      KK    R23
113      KM      ROUTE REMAINDER OF FLOW AT CP23 TO CP22A
114      RS     4          -1     0
115      RC    .05    .03    .05   4992    .005
116      RX    930    975   1000   1010   1030   1040   1041   1042
117      RY   1397  1396.5  1396   1394   1394   1396  1396.5   1397

118      KK    22
119      KM      RUNOFF HYDROGRAPH FROM SUB-BASIN 22
120      BA    .57
121      LG    .19    .33   3.38   1.03   7.40
122      UI    77.   258.   418.   563.   888.   745.   546.   395.   215.   129.
123      UI    79.    34.    24.    24.     0.     0.     0.     0.     0.     0.
124      UI     0.     0.     0.     0.     0.     0.     0.     0.     0.     0.

125      KK    R22
126      KM      ROUTE FLOW FROM CP22 TO CP22A
127      RS     3          -1     0
128      RC    .05    .03    .05   6230    .025
129      RX   1000   1030   1060   1070   1100   1115   1125   1150
130      RY   1294   1292   1290   1288   1288   1290   1292   1294

131      KK    22A
132      KM      RUNOFF HYDROGRAPH FROM SUB-BASIN 22A
133      BA    .50
134      LG    .15    .29   3.74    .29   1.00
135      UI    74.   286.   436.   640.   862.   603.   424.   253.   126.    79.
136      UI    30.    23.    23.     0.     0.     0.     0.     0.     0.     0.
137      UI     0.     0.     0.     0.     0.     0.     0.     0.     0.     0.
1                              HEC-1 INPUT                          PAGE  4

LINE      ID.......1.......2.......3.......4.......5.......6.......7.......8.......9......10


138      KK  11C22A
139      KM      ADD HYDROGRAPHS AT CP22A
140      HC     2
```

6569 1307.41 ft

5756 1406.34

OT 9.84 ft

7180

```
141     KK  CP22A
142     KM      ADD HYDROGRAPHS AT CP22A
143     HC      2
                        7780
144     KK   R22A
7 145   KM      ROUTE COMBINED HYDROGRAPHS AT CP22A TO CP25
146     RS     4          -1     0
147     RC    .03    .03    .05   7022  .0079
148     RX   1000   1030   1040   1047   1070   1097   1120   1200
149     RY   1255   1254   1250   1248   1250   1252   1254   1255

150     KK     25
151     KM      RUNOFF HYDROGRAPH FROM SUB-BASIN 25
152   8 BA    .46
153     LG    .15    .31   4.27    .49    .00
154     UI    53.   137.   254.   327.   437.   640.   505.   389.   295.   207.
155     UI   106.    80.    53.    22.    16.    16.    16.     0.     0.     0.
156     UI    0.     0.     0.     0.     0.     0.     0.     0.     0.     0.

157     KK  11CP25
158     KM      ADD HYDROGRAPHS AT CP25
159     HC      2

160     KK     24
161     KM      RUNOFF HYDROGRAPH FROM SUB-BASIN 24
162   9 BA    .14
163     LG    .35    .31   3.77    .31    .00
164     UI    21.    85.   128.   193.   241.   165.   115.    61.    34.    20.
165     UI     7.     7.     7.     0.     0.     0.     0.     0.     0.     0.
166     UI     0.     0.     0.     0.     0.     0.     0.     0.     0.     0.

167     KK   SR24
5 168   KM      STORAGE ROUTE THROUGH RETENTION BASIN AT CP24
169     RS     1   STOR      0      0
170     SV     0    .46   2.96   16.6     86  221.55  282.99  306.59  357.02
171     SQ     0      0      0      0      0      0      0     50   2598
172     SE  1210   1214   1216   1220   1230   1240   1243   1244   1246

173     KK    R24
8 174   KM      ROUTE REMAINDER OF FLOW AT CP24 TO CP25
175     RS     1          -1     0
176     RC    .05    .03    .05   1326   .021
177     RX   1000   1040   1070   1100   1200   1220   1245   1265
178     RY   1234   1232   1230   1228   1228   1230   1232   1234
```

Q = 6947
WSEL 1255.75 OT 1.75'

Q = 0
EL 1227.44

Q = 0
Dry Channel


```
LINE    ID.......1.......2.......3.......4.......5.......6.......7.......8.......9......10

179     KK   CP25
180     KM      COMBINE HYDROGRAPHS AT CP25
181     HC      2

182     KK   SR25
5 183   KM      STORAGE ROUTE THROUGH RETENTION BASIN AT CP25
184     RS     1   STOR      0      0
185     SV     0   5.61  10.27  13.15  16.62  26.62
186     SQ     0      0      0      0    125   2273
187     SE  1204   1210   1212   1213   1214   1216

188     KK     26
189     KM      RUNOFF FROM SUB-BASIN 26
190   10 BA   1.16
191     LG    .17    .30   3.97    .68   3.10
192     UI   103.   163.   401.   532.   639.   787.  1092.  1251.   956.   788.
193     UI   637.   510.   359.   200.   171.   117.    99.    32.    32.    32.
194     UI    32.    32.     0.     0.     0.     0.     0.     0.     0.     0.
195     UI     0.     0.     0.     0.     0.     0.     0.     0.     0.     0.

196     KK    R26
9 197   KM      ROUTE FLOW FROM CP26 TO CP27
```

```
198     RS    4          -1     0
199     RC   .05    .03    .05   7020  .0157
200     RX  1000   1012   1025   1040   1090   1105   1112   1120
201     RY  1250   1248   1245   1242   1242   1244   1247   1250

202     KK    27
203     KM       RUNOFF HYDROGRAPH FROM SUB-BASIN 27
204  11 BA   1.00
205     LG   .15    .31   4.27    .48    .30
206     UI  101.   206.   438.   567.   705.   970.  1225.   936.   750.   587.
207     UI  450.   256.   172.   129.    99.    31.    31.    31.    31.     0.
208     UI    0.     0.     0.     0.     0.     0.     0.     0.     0.     0.
209     UI    0.     0.     0.     0.     0.     0.     0.     0.     0.     0.

210     KK  11CP27
211     KM       ADD HYDROGRAPHS AT CP27
212     HC     2

213     KK   SR27
214     KM       STORAGE ROUTE THROUGH RETENTION BASIN AT CP27
215     RS     1   STOR     0     0
216     SV     0    .13   5.77   9.37  11.42  13.71  19.21
217     SQ     0      0      0      0      0    550   4546
218     SE  1203   1204   1210   1212   1213   1214   1216

219     KK   CP27
220     KM       ADD REMAINING FLOW OF CP25 & CP27 AT CP27
221     HC     2
```



```
LINE    ID.......1.......2.......3.......4.......5.......6.......7.......8.......9......10

222     KK   R27
223     KM       ROUTE COMBINED REMAINDER FLOW AT CP27 TO CP39
224     RS     3          -1     0
225     RC   .03    .03    .05   5928  .0084
226     RX  1000   1010   1020   1025   1055   1085   1175   1250
227     RY  1210   1210   1210   1202   1202   1204   1206   1208

228     KK    34
229     KM       RUNOFF HYDROGRAPH FROM SUB-BASIN 34
230  12 BA   .36
231     LG   .20    .34   3.21   1.14  10.00
232     UI   57.   229.   343.   530.   615.   416.   284.   139.    81.    43.
233     UI   17.    17.     0.     0.     0.     0.     0.     0.     0.     0.
234     UI    0.     0.     0.     0.     0.     0.     0.     0.     0.     0.

235     KK    33
236     KM       RUNOFF HYDROGRAPH FROM SUB-BASIN 33
237  13 BA   .65
238     LG   .20    .34   3.21   1.14  10.00
239     UI   99.   392.   591.   888.  1120.   769.   535.   290.   159.    93.
240     UI   30.    30.    30.     0.     0.     0.     0.     0.     0.     0.
241     UI    0.     0.     0.     0.     0.     0.     0.     0.     0.     0.

242     KK   CP33
243     KM       ADD HYDROGRAPHS AT CP33
244     HC     2

245     KK   R33
246     KM       ROUTE COMBINED HYDROGRAPHS AT CP33 TO CP35
247     RS     2          -1     0
248     RC   .08    .05    .08   4680  .0427
249     RX  1000   1015   1022   1035   1050   1068   1092   1100
250     RY  1800   1760   1720   1680   1680   1720   1760   1800

251     KK    35
252     KM       RUNOFF HYDROGRAPH FROM SUB-BASIN 35
253  14 BA   .39
254     LG   .20    .34   3.21   1.14  10.00
```

```
255      UI   72.  272.  410.  672.  631.  428.  270.  119.   74.   28.
256      UI   20.   20.    0.    0.    0.    0.    0.    0.    0.    0.
257      UI    0.    0.    0.    0.    0.    0.    0.    0.    0.    0.

258      KK  I1CP35
259      KM       ADD HYDROGRAPHS AT CP35
260      HC     2

261      KK    32
262      KM       RUNOFF HYDROGRAPH FROM SUB-BASIN 32
263  15  BA   1.29
264      LG   .20   .34  3.21  1.14  10.00
265      UI  130.  270.  570.  738.  919. 1268. 1585. 1202.  963.  753.
266      UI  575.  317.  221.  161.  121.   40.   40.   40.   40.    0.
267      UI    0.    0.    0.    0.    0.    0.    0.    0.    0.    0.
268      UI    0.    0.    0.    0.    0.    0.    0.    0.    0.    0.
1                          HEC-1 INPUT                          PAGE  7

LINE     ID.......1.......2.......3.......4.......5.......6.......7.......8.......9......10


269      KK   CP35
270      KM       ADD HYDROGRAPHS AT CP35
271      HC     2

272      KK    R35
12   273      KM       ROUTE COMBINED HYDROGRAPHS AT CP35 TO CP36
274      RS     2          -1     0
275      RC   .06  .035   .06  5070  .0355
276      RX  1000  1012  1023  1034  1045  1056  1067  1079
277      RY  1429  1428  1426  1424  1424  1426  1428  1429

278      KK    36
279      KM       RUNOFF HYDROGRAPH FROM SUB-BASIN 36
1    280  16  BA   .24
281      LG   .16   .34  2.38  1.41  1.10
282      UI   34.  127.  197.  278.  409.  297.  212.  140.   65.   43.
283      UI   22.   11.   11.    0.    0.    0.    0.    0.    0.    0.
284      UI    0.    0.    0.    0.    0.    0.    0.    0.    0.    0.

285      KK  I1CP36
286      KM       ADD HYDROGRAPHS AT CP36
287      HC     2

288      KK    37
1    289      KM       RUNOFF HYDROGRAPH FROM SUB-BASIN 37
290  17  BA   .95
291      LG   .19   .34  3.24  1.08  8.40
292      UI   90.  167.  373.  488.  598.  764. 1104.  941.  747.  598.
293      UI  475.  344.  190.  151.  103.   81.   28.   28.   28.   28.
294      UI   28.    0.    0.    0.    0.    0.    0.    0.    0.    0.
295      UI    0.    0.    0.    0.    0.    0.    0.    0.    0.    0.

296      KK   CP36
297      KM       ADD HYDROGRAPHS AT CP 36
298      HC     2

299      KK    R36
13   300      KM       ROUTE COMBINED HYDROGRAPHS AT CP36 TO CP38
301      RS     2          -1     0
302      RC   .05   .03   .05  4836  .0198
303      RX  1000  1008  1020  1032  1050  1112  1135  1183
304      RY  1344  1342  1340  1338  1338  1340  1342  1344

305      KK    38
306      KM       RUNOFF HYDROGRAPH FROM SUB-BASIN 38
307  18  BA   76
308      LG   .17   .34  3.21   .97  4.50
309      UI  103.  354.  568.  770. 1209.  983.  720.  513.  270.  168.
310      UI  103.   36.   32.   32.    0.    0.    0.    0.    0.    0.
311      UI    0.    0.    0.    0.    0.    0.    0.    0.    0.    0.
```

```
LINE      ID.......1.......2.......3.......4.......5.......6.......7.......8.......9......10

 312      KK   CP38
 313      KM      ADD HYDROGRAPHS AT CP38
 314      HC     2

 315      KK   SR38
5 316     KM      STORAGE ROUTE THROUGH RETENTION BASIN AT CP38
 317      RS     1   STOR     0     0
 318      SV     0   1.83   15.38   39.25   41.76   47.45   60.58
 319      SQ     0     0      0      0      44    2223    6550
 320      SE   1275   1280   1290  1297.5   1298    1300    1301

 321      KK    R38
14 322    KM      ROUTE REMAINDER OF FLOW AT CP38 TO CP39
 323      RS     3            -1     0
 324      RC   .05    .03    .05   5438   .0167
 325      RX   1000   1005   1010   1025   1055   1085   1175   1250
 326      RY   1212   1211   1210   1202   1202   1204   1206   1208

 327      KK     39
 328      KM      RUNOFF HYDROGRAPH FROM SUB-BASIN 39
 329   19 BA    .77
 330      LG   .15    .34   3.81    .63    .20
 331      UI   64.    82.   232.   313.   372.   450.   565.   791.   683.   550.
 332      UI  460.   376.   308.   213.   122.   106.    77.    64.    29.    20.
 333      UI   20.    20.    20.    20.     0.     0.     0.     0.     0.     0.
 334      UI    0.     0.     0.     0.     0.     0.     0.     0.     0.     0.

 335      KK  11CP39
 336      KM      ADD HYDROGRAPHS AT CP39
 337      HC     2

 338      KK   CP39
 339      KM      ADD HYDROGRAPHS AT CP39
 340      HC     2

 341      KK    R39
15 342    KM      ROUTE COMBINED HYDROGRAPH AT CP39 TO CP42
 343      RS     2            -1     0
 344      RC   .03    .03    .05   4836   .0141
 345      RX   1000   1005   1015   1025   1055   1070   1087   1130
 346      RY   1143   1142   1140   1132   1132   1136   1140   1142

 347      KK     40
 348      KM      RUNOFF HYDROGRAPH FROM SUB-BASIN 40
 349   20 BA    .52
 350      LG   .18    .34   3.54    .89   7.00
 351      UI   73.   258.   407.   562.   862.   658.   478.   331.   158.   104.
 352      UI   61.    22.    22.    22.     0.     0.     0.     0.     0.     0.
 353      UI    0.     0.     0.     0.     0.     0.     0.     0.     0.     0.
```



```
LINE      ID.......1.......2.......3.......4.......5.......6.......7.......8.......9......10

 354      KK    R40
16 355    KM      ROUTE FLOW FROM CP40 TO CP42
 356      RS     4            -1     0
 357      RC   .05    .03    .05   6396   .0086
 358      RX   1000   1010   1065   1095   1135   1155   1215   1220
 359      RY   1115   1114   1112   1110   1110   1112   1113   1113

 360      KK     42
 361      KM      RUNOFF HYDROGRAPH FROM SUB-BASIN 42
 362   21 BA   1.18
 363      LG   .21    .32   4.21    .45    .10
 364      UI   98.   128.   359.   483.   575.   696.   878.  1223.  1042.   840.
```

```
365     UI   701.   573.   467.   322.   182.   163.   115.    98.    39.    30.
366     UI    30.    30.    30.    30.     0.     0.     0.     0.     0.     0.
367     UI     0.     0.     0.     0.     0.     0.     0.     0.     0.     0.

368     KK  11CP42
369     KM       ADD HYDROGRAPHS AT CP42
370     HC      2

371     KK   CP42
372     KM       ADD HYDROGRAPHS AT CP42
373     HC      2

374     KK   SR42
375     KM       STORAGE ROUTE THROUGH RETENTION BASIN AT CP42
376     RS      1   STOR      0      0
377     SV      0    .11   10.43   41.63    69.9   77.34    94.2  113.66   134.7  160.78
378     SQ      0      0      0      0      0    163    844   2096    4630   13500
379     SE 1071.5   1072   1080   1090   1095   1096   1098   1100   1102   1104

380     KK    R42
381     KM       ROUTE REMAINDER OF HYDROGRAPH AT CP42 TO CP43
382     RS      1            -1      0
383     RC    .03    .03    .05    858   .0151
384     RX    900    950   1000   1030   1060   1075   1080   1090
385     RY   1094   1088   1086   1084   1084   1086   1088   1094

386     KK   41A1
387     KM       RUNOFF HYDROGRAPH FROM SUB-BASIN 41A1.
388     BA    .02
389     LG    .35    .31   3.70    .31    .00
390     UI    35.    87.    28.     4.     0.     0.     0.     0.     0.     0.
391     UI     0.     0.     0.     0.     0.     0.     0.     0.     0.     0.

392     KK  SR41A1
393     KM       STORAGE ROUTE THROUGH 30" CMP AT STA 6255+85 ON I-10.
394     RS      1   STOR      0      0
395     SV      0    .43    .53    .63    .74   1.24   1.65   3.40   6.20
396     SQ      0     10     14     18     23     29     33    869   6050
397     SE  1133.4 1134.91 1135.23 1135.58 1135.97 1137.62  1139.0  1140.3 1143.85
```



```
LINE    ID.......1.......2.......3.......4.......5.......6.......7.......8.......9......10

398     KK  CP41A1
399     KM       DIVERT FLOW FROM CP41A1 TO CP303
400     DT   1D303
401     DI      0     14     23     33    869   6050
402     DQ      0     14     23     33     35     42

403     KK   R41A1
404     KM       ROUTE REMAINDER FROM CP41A1 TO CP41A2.
405     RS      1            -1      0
406     RC    .06    .03    .04    580   .0093
407     RX    600    800    900    965   1000   1020   1030   1040
408     RY   1147   1143   1142   1141   1141   1143   1145   1145

409     KK   41A2
410     KM       RUNOFF HYDROGRAPH FROM SUB-BASIN 41A2.
411     BA    .03
412     LG    .35    .34   3.91    .57    .00
413     UI    46.   124.    51.     9.     0.     0.     0.     0.     0.     0.
414     UI     0.     0.     0.     0.     0.     0.     0.     0.     0.     0.

415     KK  CP41A2
416     KM       ADD HYDROGRAPHS AT CP41A2.
417     HC      2    .05

418     KK  SR41A2
419     KM       STORAGE ROUTE THROUGH 30" CMP AT STA 6261+65 ON I-10.
420     RS      1   STOR      0      0
```

```
421     SV    0    .10    .24    .31    .62   1.72
422     SQ    0     8     19     24    624   2104
423     SE  1132.7 1134.07 1134.98 1135.56 1137.34 1139.65

424     KK  CP41A2
425     KM      DIVERT FLOW FROM CP41A2 TO CP303
426     DT  2D303
427     DI    0     8     19     24    624   2104
428     DQ    0     8     19     24     30     36

429     KK  R41A2
19 430  KM      ROUTE REMAINDER FROM CP41A2 TO CP41A3.
431     RS    1          -1     0
432     RC   .06    .03    .04    595  .0093
433     RX   600    800    900    965   1000   1020   1030   1040
434     RY  1140   1136   1135   1134   1134   1136   1138   1140

435     KK   41A3
436     KM      RUNOFF HYDROGRAPH FROM SUB-BASIN 41A3.
437 24  BA   .03
438     LG   .35    .31   3.64    .30    .00
439     UI   38.   112.    64.    14.     4.     0.     0.     0.     0.     0.
440     UI    0.     0.     0.     0.     0.     0.     0.     0.     0.     0.
1                          HEC-1 INPUT                          PAGE 11

LINE    ID.......1.......2.......3.......4.......5.......6.......7.......8.......9......10


441     KK  CP41A3
442     KM      ADD HYDROGRAPHS AT CP41A3.
443     HC    2    .08

444     KK  SR41A3
S 445   KM      STORAGE ROUTE THROUGH 30" CMP AT STA 6267+60 ON I-10
446     RS    1   STOR     0     0
447     SV    0    .86   1.05   1.25   1.48   2.51   2.84   4.15   5.46   8.08
448     SQ    0     10     14     18     23     29     32    254    654    896
449     SE  1128.6 1130.13 1130.45 1130.80 1131.19 1132.94 1133.5 1134.0 1134.5 1135.57

450     KK  CP41A3
451     KM      DIVERT FLOW FROM CP41A3 TO CP303
452     DT  3D303
453     DI    0     10     14     18     23     29     32    254    659   1896
454     DQ    0     10     14     18     23     29     32     33     34     35

455     KK  R41A3
20 456  KM      ROUTE REMAINDER FROM CP41A3 TO CP41A.
457     RS    1          -1     0
458     RC   .06    .03    .04    628  .0093
459     RX   600    800    900    965   1000   1020   1030   1040
460     RY  1135   1131   1130   1129   1129   1131   1133   1133

461     KK   41A
462     KM      RUNOFF HYDROGRAPH FROM SUB-BASIN 41A.
463 25  BA   .05
464     LG   .35    .34   4.01    .53    .00
465     UI   44.   136.   137.    51.    14.     5.     0.     0.     0.     0.
466     UI    0.     0.     0.     0.     0.     0.     0.     0.     0.     0.

467     KK  CP41A
468     KM      ADD HYDROGRAPHS AT CP41A.
469     HC    2    .13

S 470   KK  SR41A
471     KM      STORAGE ROUTE THROUGH 36" CMP AT STA 6273+88 ON I-10
472     RS    1   STOR     0     0
473     SV    0   1.22   2.65   3.07   3.20   4.78   6.37   7.96   9.57
474     SQ    0     10     36     44     45    312    799   1429   2047
475     SE  1124.4 1125.75 1127.38 1127.86 1128.0 1128.5 1129.0 1129.5 1129.92

476     KK  CP41A
```

```
477     KM      DIVERT FLOW FROM CP41A TO CP303
478     DT  4D303
479     DI     0    10    36    44    45   312   799  1429  2047
480     DQ     0    10    36    44    45    47    49    51    52

481     KK   R41A
482     KM      ROUTE REMAINDER FROM CP41A TO CP41-1.
483     RS     1          -1     0
484     RC   .06   .03   .04  1437  .0093
485     RX   600   800   900   965  1000  1020  1030  1040
486     RY  1122  1118  1117  1116  1116  1118  1120  1120
1                          HEC-1 INPUT                          PAGE 12

LINE    ID.......1.......2.......3.......4.......5.......6.......7.......8.......9......10


487     KK   41-1
488     KM      RUNOFF HYDROGRAPH FROM SUB-BASIN 41-1
489     BA   .15
490     LG   .35   .35  3.78   .62   .00
491     UI   45.  148.  244.  325.  203.  111.   46.   21.    9.    9.
492     UI    0.    0.    0.    0.    0.    0.    0.    0.    0.    0.
493     UI    0.    0.    0.    0.    0.    0.    0.    0.    0.    0.

494     KK  CP41-1
495     KM      ADD HYDROGRAPHS AT CP41-1
496     HC     2   .28

497     KK  SR41-1
498     KM      STORAGE ROUTE THROUGH 2-36" CMP AT STA 6288+25 ON I-10.
499     RS     1  STOR     0     0
500     SV     0   .73  3.47  3.94  4.53  5.12  5.71
501     SQ     0    10    36    44   489  1300  2348
502     SE  1112.7 1114.08 1115.71  1116  1116.5  1117  1117.5

503     KK  CP41-1
504     KM      DIVERT FLOW FROM CP41-1 TO CP303
505     DT  5D303
506     DI     0    10    36    44   489  1300  2348
507     DQ     0    10    36    44    47    50    52

508     KK   R41-1
509     KM      ROUTE REMAINDER FROM CP41-1 TO CP41-2.
510     RS     1          -1     0
511     RC   .06   .03   .04  1697  .0075
512     RX   600   800   900   965  1000  1020  1030  1040
513     RY  1104  1102  1101  1100  1100  1102  1104  1105

514     KK   41-2
515     KM      RUNOFF HYDROGRAPH FROM SUB-BASIN 41-2
516     BA   .10
517     LG   .35   .35  3.87   .58   .30
518     UI   31.  101.  169.  216.  133.   69.   30.   13.    6.    0.
519     UI    0.    0.    0.    0.    0.    0.    0.    0.    0.    0.
520     UI    0.    0.    0.    0.    0.    0.    0.    0.    0.    0.

521     KK  CP41-2
522     KM      ADD HYDROGRAPHS AT CP41-2
523     HC     2   .38

524     KK  SR41-2
525     KM      STORAGE ROUTE THROUGH 2-42" CMP AT STA 6305+22 ON I-10.
526     RS     1  STOR     0     0
527     SV     0   .84  1.23  1.78  2.46  3.31  4.34  5.61  7.63  11.57
528     SV  13.47  15.30  19.63  23.76
529     SQ     0    10    14    18    23    29    35    42    50    56
530     SQ   201   419   469  1836
531     SE  1099.2 1100.45 1100.70 1100.96 1101.23 1101.52 1101.83 1102.17 1102.83  1103.5
532     SE  1103.8  1104  1104.5 1104.95
1                          HEC-1 INPUT                          PAGE 13
```

```
LINE      ID.......1.......2.......3.......4.......5.......6.......7.......8.......9......10

533       KK  CP41-2
534       KM       DIVERT FLOW FROM CP41-2 TO CP303
535       DT   6D303
536       DI     0     10     14     18     23     29     35     42     50     56
537       DI   201    419    469   1836
538       DQ     0     10     14     18     23     29     35     42     50     56
539       DQ    59     61     64     68

540       KK   R41-2
541       KM       ROUTE REMAINDER FROM CP41-2 TO CP41.
542       RS     1            -1      0
543       RC   .06    .03    .04    978   .0053
544       RX   650    800    850    965   1000   1020   1030   1040
545       RY  1100   1099   1098   1096   1096   1098   1100   1101

546       KK     41
547       KM       RUNOFF HYDROGRAPH FROM SUB-BASIN 41
548       BA    .58
549       LG    .21    .34   4.24    .44    .30
550       UI    56.   108.   237.   308.   380.   493.   696.   562.   450.   357.
551       UI   282.   193.   103.    90.    56.    38.    17.    17.    17.    17.
552       UI    0.     0.     0.     0.     0.     0.     0.     0.     0.     0.
553       UI    0.     0.     0.     0.     0.     0.     0.     0.     0.     0.

554       KK    CP41
555       KM       ADD HYDROGRAPHS AT CP41
556       HC     2    .68

557       KK    SR41
558       KM       STORAGE ROUTE THROUGH 2-36" CMP AT STA 6315+00 ON I-10.
559       RS     1   STOR     0      0
560       SV     0    .09    .37    .86   2.15   2.99   4.92   5.83   7.92  11.06
561       SV   15.07
562       SQ     0      8     11     15     24     30     36     42     43    400
563       SQ   1219
564       SE  1094.6 1095.91 1096.15 1096.42 1096.99 1097.30 1097.91 1099.12  1099.5  1100.0
565       SE  1100.6

566       KK    CP41
567       KM       DIVERT FLOW FROM CP41 TO CP303
568       DT   7D303
569       DI     0      8     11     15     24     30     36     42     43    400
570       DI   1219
571       DQ     0      8     11     15     24     30     36     42     43     46
572       DQ    50

573       KK     R41
574       KM       ROUTE REMAINDER FROM CP41 TO CP43-1.
575       RS     1            -1      0
576       RC   .06    .03    .04    700   .0053
577       RX   650    800    850    965   1000   1020   1030   1040
578       RY  1098   1097   1096   1094   1094   1096   1098   1099
```



```
LINE      ID.......1.......2.......3.......4.......5.......6.......7.......8.......9......10

579       KK    43-1
580       KM       RUNOFF HYDROGRAPH FROM SUB-BASIN 43-1
581       BA    .04
582       LG    .35    .35   4.29    .40    .90
583       UI    25.    74.   117.    63.    21.     7.     3.     0.     0.     0.
584       UI     0.     0.     0.     0.     0.     0.     0.     0.     0.     0.

585       KK  CP43-1
586       KM       ADD HYDROGRAPHS AT CP43-1
587       HC     2    1.0
```

```
588     KK  SR43-1
589     KM      STORAGE ROUTE THROUGH 5-48" CMP FROM STA 6319+32 TO STA 6324+32 ON I-10.
590     RS     1   STOR     0     0
591     SV     0    .37    .80   1.58   2.71   4.54   5.86   7.60  12.33  14.79
592     SV  21.44
593     SQ     0     32     60    102    120    220    260    301    357    501
594     SQ   1057
595     SE  1091.7 1092.82 1093.25 1093.72 1094.21 1094.77 1095.08 1095.43 1096.19  1096.5
596     SE  1097.0

597     KK  CP43-1
598     KM      DIVERT FLOW FROM CP43-1 TO CP303A
599     DT  1D303A
600     DI     0     32     60    102    120    220    260    301    357    501
601     DI   1057
602     DQ     0     32     60    102    120    220    260    301    357    378
603     DQ   417

604     KK   R43-1
605     KM      ROUTE REMAINDER FROM CP43-1 TO CP43-2.
606     RS     1           -1     0
607     RC   .06    .03    .04    500   .005
608     RX   600    725    800    965   1000   1020   1030   1040
609     RY  1095   1094  1093.5   1093   1093   1094   1096   1097

610     KK   43-2
611     KM      RUNOFF HYDROGRAPH FROM SUB-BASIN 43-2
612     BA    .01
613     LG   .35    .35   4.25    .42   1.30
614     UI    9.    28.    27.    10.     2.     1.     0.     0.     0.     0.
615     UI    0.     0.     0.     0.     0.     0.     0.     0.     0.     0.

616     KK  CP43-2
617     KM      ADD HYDROGRAPHS AT CP43-2
618     HC     2   1.01

619     KK  SR43-2
620     KM      STORAGE ROUTE THROUGH 36" CMP AT STA 6326+40 ON I-10.
621     RS     1   STOR     0     0
622     SV     0    .12    .38    .71   1.11   1.61   3.12   3.95   5.19   6.02
623     SQ     0      8     12     15     20     24     36     38    128    222
624     SE  1092.0 1093.28 1093.52 1093.78 1094.05 1094.35 1095.13  1095.5  1096.0  1096.3
1                          HEC-1 INPUT                                PAGE 15

LINE    ID.......1.......2.......3.......4.......5.......6.......7.......8.......9......10


625     KK  CP43-2
626     KM      DIVERT FLOW FROM CP43-2 TO CP303A
627     DT  2D303A
628     DI     0      8     12     15     20     24     36     38    128    222
629     DQ     0      8     12     15     20     24     36     38     40     43

630     KK   R43-2
631     KM      ROUTE REMAINDER FROM CP43-2 TO CP43-3.
632     RS     1           -1     0
633     RC   .06    .03    .04   1000   .003
634     RX   750    800    900    965   1000   1020   1030   1040
635     RY  1096.5  1096   1094   1093   1093   1094   1096   1097

636     KK   43-3
637     KM      RUNOFF HYDROGRAPH FROM SUB-BASIN 43-3
638     BA    .05
639     LG   .35    .35   4.30    .40    .90
640     UI   68.   195.    98.    20.     0.     0.     0.     0.     0.     0.
641     UI    0.     0.     0.     0.     0.     0.     0.     0.     0.     0.

642     KK  CP43-3
643     KM      ADD HYDROGRAPHS AT CP43-3.
644     HC     2   1.06
```

```
645     KK  SR43-3
646     KM      STORAGE ROUTE THROUGH 3-36" CMPS FROM STA 6330+50 TO STA 6340+10 ON I-10
647     RS    1   STOR     0     0
648     SV    0   2.47   3.51   4.85   6.37   8.27  10.69  13.89  18.76  30.99
649     SQ    0     27     36     48     63     78     93    165    364    951
650     SE  1092.8 1094.12 1094.37 1094.65 1094.93 1095.24 1095.59   1096 1096.56 1097.79

651     KK  CP43-3
652     KM      DIVERT FLOW FROM CP43-3 TO CP303A
653     DT  3D303A
654     DI    0     27     36     48     63     78     93    165    364    951
655     DQ    0     27     36     48     63     78     93    102    114    135

656     KK  R43-3
657     KM      ROUTE REMAINDER FROM CP43-3 TO CP43-4.
658     RS    1           -1     0
659     RC   .06    .03    .04    800   .018
660     RX   800    850    930    965   1000   1020   1030   1040
661     RY  1096.5  1096   1094   1093   1093   1096   1097  1097.5

662     KK   43-4
663     KM      RUNOFF HYDROGRAP FROM SUB-BASIN 43-4
664     BA   .03
665     LG   .35    .35   4.28    .41    .80
666     UI   43.   121.    54.    10.     0.     0.     0.     0.     0.     0.
667     UI    0.     0.     0.     0.     0.     0.     0.     0.     0.     0.
1                              HEC-1 INPUT                                PAGE 16

LINE    ID.......1.......2.......3.......4.......5.......6.......7.......8.......9......10


668     KK  CP43-4
669     KM      ADD HYDROGRAPHS AT CP43-4
670     HC    2   1.09

671     KK  SR43-4
672     KM      STORAGE ROUTE THROUGH 2-36" CMPS FROM STA 6343+25 TO STA 6345+65 ON I10
673     RS    1   STOR     0     0
674     SV    0    .89   1.27    1.8   2.43   3.24   3.31   4.75   7.05  12.83
675     SQ    0     18     24     32     42     52     62    131    326    906
676     SE  1092.8 1094.12 1094.37 1094.65 1094.93 1095.24 1095.59   1096 1096.56 1097.79

677     KK  CP43-4
678     KM      DIVERT FLOW AT STA 6345+65
679     DT  DI43-4
680     DI    0     18     24     32     42     52     62    131    326    906
681     DQ    0     18     24     32     42     52     62     68     76     90

682     KK  R43-4
683     KM      ROUTE REMAINDER FROM CP43-4 TO CP43-5
684     RS    1           -1     0
685     RC   .06    .03    .04    500   .018
686     RX   800    850    930    965   1000   1020   1030   1040
687     RY  1096.5  1096   1094   1093   1093   1096   1097  1097.5

688     KK   43-5
689     KM      RUNOFF HYDROGRAPH FROM SUB-BASIN 43-5
690     BA   .02
691     LG   .35    .35   4.25    .39    .00
692     UI   27.    79.    39.     8.     0.     0.     0.     0.     0.     0.
693     UI    0.     0.     0.     0.     0.     0.     0.     0.     0.     0.

694     KK  CP43-5
695     KM      ADD HYDROGRAPHS AT CP43-5
696     HC    2   1.11

697     KK  SR43-5
698     KM      STORAGE ROUTE THROUGH 36" CMP AT STA 6349+45 ON I-10
699     RS    1   STOR     0     0
700     SV    0    .09    .24    .44    .69    1.0   1.42   2.14   2.76   3.73
701     SV   4.84   5.94
```

```
702     SQ     0     9    13    17    22    27    34    40    42    44
703     SQ   134   276
704     SE  1089.8 1091.09 1091.35 1091.64 1091.94 1092.26 1092.62 1093.13  1093.5    1094
705     SE  1094.5 1094.94

706     KK  CP43-5
707     KM       DIVERT FLOW AT STA 6349+45.
708     DT  DI43-5
709     DI     0     9    13    17    22    27    34    40    42    44
710     DI   134   276
711     DQ     0     9    13    17    22    27    34    40    42    44
712     DQ    46    48
1                          HEC-1 INPUT                          PAGE 17

LINE    ID.......1.......2.......3.......4.......5.......6.......7.......8.......9......10


713     KK   R43-5
29 714  KM       ROUTE REMAINDER FROM CP43-5 TO CP43-6
715     RS     1          -1     0
716     RC   .06    .03    .04    455   .0068
717     RX   800    850    930    965   1000   1020   1030   1040
718     RY  1096   1094   1093   1092   1092   1094   1096  1097.5

719     KK   43-6
720     KM       RUNOFF HYDROGRAPH FROM SUB-BASIN 43-6
721 34  BA   .02
722     LG   .35    .35   4.17    .38    .00
723     UI   36.    87.   27.     4.     0.     0.     0.     0.     0.     0.
724     UI    0.     0.    0.     0.     0.     0.     0.     0.     0.     0.

725     KK  CP43-6
726     KM       ADD HYDROGRAPHS AT CP43-6
727     HC     2   1.13

728     KK  SR43-6
5 729   KM       STORAGE ROUTE THROUGH 36" CMP AT STA 6354+00 ON I-10
730     RS     1   STOR     0     0
731     SV     0   1.59   2.29   3.18   4.29   5.62   7.39   9.53  14.20  30.25
732     SV  32.52   38.0  43.84  49.83  55.96  59.96
733     SQ     0     9    13    17    22    27    33    39    47    55
734     SQ    56   141   325   811  1440  2714
735     SE  1089.3 1090.58 1090.84 1091.12 1091.42 1091.73 1092.09 1092.47 1093.23 1095.27
736     SE  1095.5  1096.0  1096.5  1097.0  1097.5 1097.82

737     KK  CP43-6
738     KM       DIVERT FLOW AT STA 6354+00.
739     DT  DI43-6
740     DI     0     9    13    17    22    27    33    39    47    55
741     DI    56   141   325   811  1440  2714
742     DQ     0     9    13    17    22    27    33    39    47    55
743     DQ    56    58    60    61    62    64

744     KK   R43-6
745     KM       ROUTE REMAINDER FROM CP43-6 TO CP43-7
30 746  RS     1          -1     0
747     RC   .06    .03    .04    300   .0162
748     RX   750    800    930    965   1000   1020   1030   1040
749     RY  1096   1094   1092   1090   1090   1092   1096  1097.5

750     KK   43-7
751 35  KM       RUNOFF HYDROGRAPH FROM SUB-BASIN 43-7
752     BA   .02
753     LG   .35    .35   4.25    .39    .00
754     UI   49.    90.   14.     0.     0.     0.     0.     0.     0.     0.
755     UI    0.     0.    0.     0.     0.     0.     0.     0.     0.     0.
1                          HEC-1 INPUT                          PAGE 18

LINE    ID.......1.......2.......3.......4.......5.......6.......7.......8.......9......10
```

```
KK  CP43-7
KM      ADD HYDROGRAPHS AT CP43-7
HC      2   1.15

KK  SR43-7
KM      STORAGE ROUTE THROUGH 36" CMP AT STA 6357+00 ON I-10
RS      1   STOR     0     0
SV      0   .27   .39   .55   .74   .98  1.30  1.78  2.23  5.12
SQ      0    10    13    18    23    29    35    38   101   892
SE  1087.6 1088.93 1089.20 1089.49 1089.80 1090.13 1090.51  1091.0 1091.39 1093.26

KK  CP43-7
KM      DIVERT FLOW AT STA 6357+00.
DT  DI43-7
DI      0    10    13    18    23    29    35    38   101   892
DQ      0    10    13    18    23    29    35    38    40    42

KK  R43-7
KM      ROUTE REMAINDER FROM CP43-7 TO CP43-8
RS      1          -1     0
RC    .06   .03   .04   385  .018
RX    700   800   850   965  1000  1020  1030  1040
RY   1094  1093  1092  1090  1090  1092  1096  1097.5

KK   43-8
KM      RUNOFF HYDROGRAPH FROM SUB-BASIN 43-8
BA    .01
LG    .35   .35  4.25   .39   .00
UI    36.   37.    4.    0.    0.    0.    0.    0.    0.    0.
UI     0.    0.    0.    0.    0.    0.    0.    0.    0.    0.

KK  CP43-8
KM      ADD HYDROGRAPHS AT CP43-8
HC      2   1.16

KK  SR43-8
KM      STORAGE ROUTE THROUGH 36" CMP AT STA 6360+85 ON I-10
RS      1   STOR     0     0
SV      0   .22   .32   .46   .63   .89  1.74  3.41  4.93   6.3
SV   6.87
SQ      0     8    12    15    20    24    30    36    39   129
SQ    186
SE  1085.1 1086.38 1086.62 1086.88 1087.15 1087.48 1088.28 1089.33  1090.0  1090.5
SE  1090.7

KK  CP43-8
KM      DIVERT FLOW AT STA 6360+85.
DT  DI43-8
DI      0     8    12    15    20    24    30    36    39   129
DI    186
DQ      0     8    12    15    20    24    30    36    39    41
DQ     43
```

1 HEC-1 INPUT PAGE 19

```
LINE      ID.......1.......2.......3.......4.......5.......6.......7.......8.......9......10

KK  R43-8
KM      ROUTE REMAINDER FROM CP43-8 TO CP43.
RS      1          -1     0
RC    .06   .03   .04   600  .008
RX    800   850   930   965  1000  1020  1030  1040
RY   1096  1092  1090  1088  1088  1090  1096  1097.5

KK     43
KM      RUNOFF HYDROGRAPH FROM SUB-BASIN 43
BA    .01
LG    .35   .35  4.29   .41   .60
UI    25.   45.    7.    0.    0.    0.    0.    0.    0.    0.
UI     0.    0.    0.    0.    0.    0.    0.    0.    0.    0.
```

```
KK  I1CP43
KM      ADD HYDROGRAPHS AT CP43
HC     2   1.17

KK   CP43    .03
KM      ADD HYDROGRAPHS AT CP43.
HC     2   13.90

KK   SR43
KM      STORAGE ROUTE THROUGH 4-10X8 BC'S AT STA 6366+85 ON I-10.
KM      RAISE DIKE ELEVATION TO 1097.5 AND CHECK WSEL AND CAPACITY OF 4-10X8
KM      BC'S WITH NO BREAKOUT FLOW OVER DIKE TO THE EAST.
RS     1   STOR     0     0
SV     0   .052   4.33   16.22   24.89   28.79   33.09   37.88   51.24   65.35
SV   95.72
SQ     0   1020   1965   3065   3600   3794   3984   4173   4521   4800
SQ   5172
SE  1081.2 1085.18 1087.60 1090.19  1091.5  1092.0  1092.5  1093.0  1094.0 1094.81
SE  1096.0

KK   CP43
KM      DIVERT FLOW AT STA 6366+85 ON I-10 (TUTHILL DIKE).
DT   DI43
DI     0    920   1824   2976   3396   3536   3676   3816   4368   4644
DQ     0      0      0      0      0      0      0      0      0      0

KK   RD43
KM      ROUTE REMAINDER FROM FROM CP43 TO CPWT4.
RS     2          -1      0
RC    .05    .03    .05   4000   .0083
RX    800    900    965   1000   1050   1100   1200   1300
RY   1076   1075   1075   1064   1064   1071   1071   1075

KK  CP43-4
KM      RETURN DIVERT AT CP43-4
DR  DI43-4
```



```
LINE      ID.......1.......2.......3.......4.......5.......6.......7.......8.......9......10

KK  RD43-4
KM      ROUTE DIVERTED FLOW FROM CP43-4 TO CPWT4
RS     2          -1      0
RC   .045    .03   .045   4200   .0067
RX    910    940    970    990   1000   1020   1060   1100
RY   1064   1063   1062   1060   1060   1062   1063   1064

KK  CP43-5
KM      RETURN DIVERT AT CP43-5
DR  DI43-5

KK  RD43-5
KM      ROUTE DIVERTED FLOW FROM CP43-5 TO CPWT4
RS     2          -1      0
RC   .045    .03   .045   4100   .0067
RX    910    940    970    990   1000   1020   1060   1100
RY   1064   1063   1062   1060   1060   1062   1063   1064

KK  I1CWT4
KM      ADD HYDROGRAPHS AT CPWT4
HC     2    .05

KK  CP43-6
KM      RETURN DIVERT AT CP43-6
DR  DI43-6

KK  RD43-6
KM      ROUTE DIVERTED FLOW FROM CP43-6 TO CPWT4
RS     2          -1      0
RC   .045    .03   .045   4000   .0067
```

```
869     RX   910   940   970   990   1000   1020   1060   1100
870     RY  1064  1063  1062  1060   1060   1062   1063   1064

871     KK  I2CWT4
872     KM      ADD HYDROGRAPHS AT CPWT4
873     HC     2    .07

874     KK  CP43-7
875     KM      RETURN DIVERT AT CP43-7
876     DR  DI43-7

877     KK  RD43-7
37 878  KM      ROUTE DIVERTED FLOW FROM CP43-7 TO CPWT4
879     RS     2          -1     0
880     RC   .045   .03   .045   4000   .0067
881     RX   910   940   970   990   1000   1020   1060   1100
882     RY  1064  1063  1062  1060   1060   1062   1063   1064

883     KK  I3CWT4
884     KM      ADD HYDROGRAPHS AT CPWT4
885     HC     2    .09
1                          HEC-1 INPUT                          PAGE 21

LINE    ID.......1.......2.......3.......4.......5.......6.......7.......8.......9......10

886     KK  CP43-8
887     KM      RETURN DIVERT AT CP43-8
888     DR  DI43-8

889     KK  RD43-8
38 890  KM      ROUTE DIVERTED FLOW FROM CP43-8 TO CPWT4
891     RS     2          -1     0
892     RC   .045   .03   .045   4000   .0067
893     RX   910   940   970   990   1000   1020   1060   1100
894     RY  1064  1063  1062  1060   1060   1062   1063   1064

895     KK  I4CWT4
896     KM      ADD HYDROGRAPHS AT CPWT4
897     HC     2    .10

898     KK     44
899     KM      RUNOFF HYDROGRAPH FROM SUB-BASIN 44
900  38 BA    .22
901     LG    .35    .35   4.14    .37    .00
902     UI   33.   133.   200.   301.   379.   260.   181.    98.    54.    31.
903     UI   10.    10.    10.     0.     0.     0.     0.     0.     0.     0.
904     UI    0.     0.     0.     0.     0.     0.     0.     0.     0.     0.

905     KK  I5CWT4
906     KM      ADD HYDROGRAPHS AT CPWT4
907     HC     2    .32

908     KK  I6CWT4
909     KM      ADD HYDROGRAPHS AT CPWT4.
910     HC     2   14.12

911     KK   45-1
912     KM      RUNOFF HYDROGRAPH FROM SUB-BASIN 45-1
913  39 BA    .08
914     LG    .21    .34   4.19    .38    .60
915     UI   33.   102.   189.   155.    86.    31.    13.     6.     0.     0.
916     UI    0.     0.     0.     0.     0.     0.     0.     0.     0.     0.

917     KK   CP43
918     KM      RETURN DIVERT AT CP43
919     DR   DI43

920     KK  CP45-1
921     KM      ADD HYDROGRAPHS AT CP45-1
922     HC     2    .08
```

```
923     KK  SR45-1
924     KM      STORAGE ROUTE THROUGH 1-12X12 BC, 2-42" CMP AND 3-36" CMP FROM STA. 6368
925     KM      +00 TO STA. 6375+20 ON I-10 (100' TO 800' EAST OF TUTHILL RD.).
926     RS     1   STOR     0     0
927     SV     0    .85   2.23   5.73  11.22  14.61  19.71
928     SQ     0     51    156   1200   3130   4161   5509
929     SE  1083.1 1084.78  1086.0  1087.4  1089.0  1089.5  1090.0
1                              HEC-1 INPUT                          PAGE 22

LINE    ID.......1.......2.......3.......4.......5.......6.......7.......8.......9......10


930     KK  CP45-1
931     KM      DIVERT FLOW AT STA 6375+20
932     DT  DI45-1
933     DI     0     51    156   1200   3130   4161   5509
934     DQ     0     51    156    305    480    543    610

935     KK   R45-1
936     KM      ROUTE REMAINDER FROM CP45-1 TO CP45
937     RS     1           -1     0
938     RC   .04    .03    .04   1200  .0042
939     RX   850    900    930    965   1000   1020   1030   1040
940     RY  1086   1085   1084   1083   1083   1086   1090   1091

941     KK    45
942     KM      RUNOFF HYDROGRAPH FROM SUB-BASIN 45
943     BA    .38
944     LG   .17    .33   3.94    .34    .20
945     UI   36.    64.   145.   190.   232.   293.   427.   384.   301.   244.
946     UI  194.   148.    82.    60.    45.    36.    13.    11.    11.    11.
947     UI   11.     0.     0.     0.     0.     0.     0.     0.     0.     0.
948     UI    0.     0.     0.     0.     0.     0.     0.     0.     0.     0.

949     KK   CP45
950     KM      ADD HYDROGRAPHS AT CP45
951     HC     2    .46

952     KK   SR45
953     KM      STORAGE ROUTE THROUGH 9-36" CMP'S FROM STA 6379+84 TO STA 6390+50 ON
954     KM      I-10.
955     RS     1   STOR     0     0
956     SV     0   1.84   5.95  18.55  23.27  29.04
957     SQ     0     41    132    317   1462   3517
958     SE  1081.1 1082.74  1084.0  1086.0  1086.5  1087.0

959     KK   CP45
960     KM      DIVERT FLOW AT STA 6390+50.
961     DT   DI45
962     DI     0     41    132    317   1462   3517
963     DQ     0     41    132    317    362    392

964     KK    R45
965     KM      ROUTE REMAINDER FROM CP45 TO CP46-1.
966     RS     1           -1     0
967     RC   .04    .03    .04   1500  .0031
968     RX   850    900    930    965   1000   1020   1030   1040
969     RY  1083   1082   1081   1080   1080   1082   1083   1084

970     KK   46-1
971     KM      RUNOFF HYDROGRAPH FROM SUB-BASIN 46-1
972     BA    .15
973     LG   .19    .35   4.23    .39    .60
974     UI   19.    60.   101.   133.   203.   208.   151.   111.    75.    37.
975     UI   26.    16.     6.     6.     6.     0.     0.     0.     0.     0.
976     UI    0.     0.     0.     0.     0.     0.     0.     0.     0.     0.
1                              HEC-1 INPUT                          PAGE 23

LINE    ID.......1.......2.......3.......4.......5.......6.......7.......8.......9......10
```

```
977     KK  CP46-1
978     KM      ADD HYDROGRAPHS AT CP46-1
979     HC      2    .61

980     KK  SR46-1
981     KM      STORAGE ROUTE THROUGH 5-36 CMP'S FROM STA 6395+75 TO STA 6400+60 ON
982     KM      I-10.
983     RS      1   STOR     0     0
984     SV      0   1.07   4.71    9.0   11.7  14.88  18.65  23.01
985     SQ      0     39    128    183    199    610   1351   2310
986     SE  1078.3  1080.0  1081.5  1082.5  1083.0  1083.5  1084.0  1084.5

987     KK  CP46-1
988     KM      DIVERT FLOW AT STA 6400+60.
989     DT  DI46-1
990     DI      0     39    128    183    199    610   1351   2310
991     DQ      0     39    128    183    199    210    225    244

992     KK  R46-1
993     KM      ROUTE REMAINDER FROM CP46-1 TO CP46.
994     RS      1           -1      0
995     RC    .04    .03    .04   2355   .0057
996     RX    700    900    930    965   1000   1020   1030   1040
997     RY   1076  1075.5   1075   1074   1074   1078   1080   1082

998     KK     46
999     KM      RUNOFF HYDROGRAPH FROM SUB-BASIN 46
1000    BA    .85
1001    LG    .19    .34   4.25    .45    .40
1002    UI    61.    61.   184.   265.   322.   373.   441.   539.   741.   706.
1003    UI   567.   488.   409.   345.   291.   208.   129.   104.    94.    61.
1004    UI    61.    19.    19.    19.    19.    19.    19.    19.     0.     0.
1005    UI     0.     0.     0.     0.     0.     0.     0.     0.     0.     0.

1006    KK  I1CP46
1007    KM      ADD HYDROGRAPHS AT CP46
1008    HC      2   1.46

1009    KK   215B
1010    KM      RUNOFF HYDROGRAPH FROM SUB-BASIN 215B
1011    BA    .10
1012    LG    .35    .33   3.94    .34    .00
1013    UI    72.   213.   293.   137.    41.    11.     0.     0.     0.     0.
1014    UI     0.     0.     0.     0.     0.     0.     0.     0.     0.     0.

1015    KK   R215B
1016    KM      ROUTE FLOW FROM CP215B TO CP232A
1017    RS      3           -1
1018    RC    .07   .035    .07   3450   .0012
1019    RX   1000   1001   1002   1010   1030   1050   1150   1290
1020    RY   1190   1190   1190   1183   1183   1184   1186   1190
```



```
LINE    ID.......1.......2.......3.......4.......5.......6.......7.......8.......9......10

1021    KK    232A
1022    KM      RUNOFF HYDROGRAPH FROM SUB-BASIN 232A
1023    BA    .61
1024    LG    .35    .33   4.08    .36    .00
1025    UI    85.   303.   478.   660.  1012.   771.   561.   388.   185.   122.
1026    UI    72.    26.    26.    26.     0.     0.     0.     0.     0.     0.
1027    UI     0.     0.     0.     0.     0.     0.     0.     0.     0.     0.

1028    KK  CP232A
1029    KM      ADD HYDROGRAPHS AT CP232A
1030    HC      2    .71

1031    KK   R232A
1032    KM      ROUTE FLOW FROM CP232A TO CP28
```

```
1033      RS    4          -1
1034      RC   .07   .035   .07   4400   .0043
1035      RX  1000   1001   1020   1030   1045   1060   1119   1120
1036      RY  1181   1181   1180   1178   1178   1180   1181   1181

1037      KK    28
1038 45   KM       RUNOFF HYDROGRAPH FROM SUB-BASIN 28
1039      BA    86
1040      LG   .15    .35   4.02    .52    .10
1041      UI   76.   119.   295.   392.   470.   578.   798.   929.   711.   587.
1042      UI  473.   381.   272.   153.   127.    89.    76.    24.    23.    23.
1043      UI   23.    23.    0.     0.     0.     0.     0.     0.     0.     0.
1044      UI    0.     0.    0.     0.     0.     0.     0.     0.     0.     0.

1045      KK   CP28
1046      KM       ADD HYDROGRAPHS  AT CP28
1047      HC     2   1.57

1048      KK    R28
44 1049   KM       ROUTE FLOW FROM CP28 TO CP30
1050      RS     2          -1
1051      RC   .03    .03    .05   2400   .027
1052      RX  1000   1001   1035   1050 15 1065   1075   1085   1095
1053      RY  1165   1165   1164   1162   1162   1164   1166   1168

1054      KK    30
1055      KM       RUNOFF HYDROGRAPH FROM SUB-BASIN 30
1056 46   BA    28
1057      LG   .15    .35   3.27    .97    .20
1058      UI   36.   116.   193.   257.   400.   380.   277.   203.   132.    63.
1059      UI   45.    26.    11.    11.    11.     0.     0.     0.     0.     0.
1060      UI    0.     0.    0.     0.     0.     0.     0.     0.     0.     0.

1061      KK  11CP30
1062      KM       ADD HYDROGRAPHS AT CP30
1063      HC     2
```

Q 4170
WSE 1190.13

Q - 8758
WSEL - 1165.25
OT 3.28 ft
Left Bank
Jackrabbit Trail


```
LINE      ID.......1.......2.......3.......4.......5.......6.......7.......8.......9......10

1064      KK    29
1065      KM       RUNOFF HYDROGRAPH FROM SUB-BASIN 29
1066 47   BA    22
1067      LG   .15    .35   3.52    .78    .00
1068      UI   31.   113.   176.   245.   370.   276.   199.   135.    64.    42.
1069      UI   23.    10.    10.    10.     0.     0.     0.     0.     0.     0.
1070      UI    0.     0.    0.     0.     0.     0.     0.     0.     0.     0.

1071      KK   SR29
5 1072    KM       STORAGE ROUTE THROUGH RETENTION BASIN AT CP29
1073      RS     1   STOR     0     0
1074      SV     0   0.99   12.73   23.45   36.25   50.68   54.76   59.33   83.20
1075      SQ     0      0      0      0      0      0      0     88    6226
1076      SE  1164.5   1166   1170   1172   1174   1176  1177.5   1178   1180

1077      KK    R29
45 1078   KM       ROUTE REMAINDER OF FLOW AT CP29 TO CP30
1079      RS     1          -1     0
1080      RC   .05    .03    .05   1200   .0021
1081      RX  1000   1042   1052   1060 22 1082   1090   1140   1170
1082      RY  1171   1170   1168   1166   1166   1168   1170   1172

1083      KK   CP30
1084      KM       ADD HYDROGRAPHS AT CP30
1085      HC     2

1086      KK    R30
46 1087   KM       ROUTE COMBINED HYDROGRAPHS AT CP30 TO CP31
1088      RS     4          -1     0
1089      RC   .03    .03    .05   6770   .0069
```

RB, Channel Depth = 5 ft

```
1090      RX   1000   1025   1045   1070   1095   1110   1200   1550
1091      RY   1157   1156   1154   1152   1152   1154   1156   1158

1092      KK    31
1093      KM      RUNOFF HYDROGRAPH FROM SUB-BASIN 31
1094      BA    71
1095      LG    .19    .35   3.76    .68    .20
1096      UI    60.    83.   224.   299.   358.   434.   565.   752.   613.   500.
1097      UI   413.   336.   268.   171.   105.    98.    60.    52.    18.    18.
1098      UI    18.    18.    18.     0.     0.     0.     0.     0.     0.     0.
1099      UI     0.     0.     0.     0.     0.     0.     0.     0.     0.     0.

1100      KK   CP31
1101      KM      ADD HYDROGRAPHS AT CP31
1102      HC     2

1103      KK   R31
1104      KM      ROUTE COMBINED HYDROGRAPH AT CP31 TO CP46
1105      RS     5          -1     0
1106      RC    .03    .03    .05   5800   .0082
1107      RX   1000   1012   1024   1035   1045   1053   1065   1098
1108      RY   1093   1092   1090   1088   1088   1090   1092   1094
1                          HEC-1 INPUT                          PAGE 26

LINE      ID.......1.......2.......3.......4.......5.......6.......7.......8.......9......10


1109      KK   CP46
1110      KM      ADD HYDROGRAPHS AT CP46.
1111      HC     2   4.24

1112      KK   SR46
1113      KM      STORAGE ROUTE THROUGH 5-10'X4' BC'S AT STA 6419+30 ON I-10.
1114      RS     1   STOR     0     0
1115      SV     0   1.08   3.13   4.28   5.18   7.54  12.96
1116      SQ     0    730   1460   1680   1834   2090   2420
1117      SE  1065.4 1068.42 1070.53 1071.4 1072.0 1073.0 1074.3

1118      KK    R46
1119      KM      ROUTE REMAINDER OF FLOW AT CP46 TO CPWT4
1120      RS     2          -1     0
1121      RC    .03    .03    .05   6800   .0067
1122      RX    910    930    940    950   1000   1020   1200   1400
1123      RY   1065   1064   1064   1060   1060   1064   1064   1065

1124      KK  CP45-1
1125      KM      RETURN DIVERT AT  CP45-1
1126      DR  DI45-1

1127      KK  RD45-1
1128      KM      ROUTE DIVERTED FLOW FROM CP45-1 TO CPWT4
1129      RS     2          -1     0
1130      RC   .045    .03   .045   4100   .0067
1131      RX    910    940    970    990   1000   1020   1060   1100
1132      RY   1064   1063   1062   1060   1060   1062   1063   1064

1133      KK   CP45
1134      KM      RETURN DIVERT AT CP45
1135      DR   DI45

1136      KK   RD45
1137      KM      ROUTE DIVERTED FLOW FROM  CP45  TO CPWT4.
1138      RS     2          -1     0
1139      RC   .045    .03   .045   4200   .0067
1140      RX    910    940    970    990   1000   1020   1060   1100
1141      RY   1064   1063   1062   1060   1060   1062   1063   1064

1142      KK  I7CWT4
1143      KM      ADD HYDROGRAPHS AT CPWT4
1144      HC     2   .46
```

```
1145        KK  CP46-1
1146        KM      RETURN DIVERT AT CP46-1
1147        DR  DI46-1

1148        KK  RD46-1
1149        KM      ROUTE DIVERTED FLOW FROM CP46-1 TO CPWT4
1150        RS      3          -1      0
1151        RC   .045    .03   .045   4900   .0067
1152        RX    910    940    970    990   1000   1020   1060   1100
1153        RY   1064   1063   1062   1060   1060   1062   1063   1064
1                                HEC-1 INPUT                          PAGE 27

LINE        ID.......1.......2.......3.......4.......5.......6.......7.......8.......9......10


1154        KK  I8CWT4
1155        KM      ADD HYDROGRAPHS AT CPWT4
1156        HC      2    .61

1157        KK    WT4
1158        KM      RUNOFF HYDROGRAPH FROM SUB-BASIN WT4
1159        BA     .77
1160        LG    .35    .35   4.17    .38    .40
1161        UI   108.   384.   604.   835.  1279.   973.   707.   488.   232.   153.
1162        UI    90.    33.    33.    33.    0.     0.     0.     0.     0.     0.
1163        UI     0.     0.     0.     0.    0.     0.     0.     0.     0.     0.

1164        KK  I9CWT4
1165        KM      ADD HYDROGRAPHS AT CPWT4
1166        HC      2   1.38

1167        KK  I10WT4
1168        KM      ADD HYDROGRAPHS AT CPWT4
1169        HC      2   5.62

1170        KK   CPWT4
1171        KM      ADD ENTIRE FLOW TOGETHER THAT GETS TO WHITE TANKS STRUCTURE NO 4.
1172        HC      2  19.28

1173        KK  DIVERT   DIVERT TO GET 1/2 PMF
1174        DT    OUT
1175        DI      0   1000   5000  10000  20000  50000
1176        DQ      0    500   2500   5000  10000  25000

1177        KK    RS47
1178        KO      1      2
1179        KM      STORAGE ROUTE TROUGH WHITE TANKS STRUCTURE NO. 4.
1180        RS      1    STOR     0      0
1181        SV      0   2.81     51    148    277    543   1269   1396   1690   2045
1182        SV   2246
1183        SQ      0      0      0      0      0      0      0    375   2600   6150
1184        SQ  14700
1185        SE    997   1000   1010   1020   1030   1040   1049   1050   1052   1054
1186        SE   1055
1187        ZZ
1
```

JPRT - All for this Structure.
JPLT - Plot computed Hydrograph
RSVPIC
Output Control
5
RS.V R.C
not used

```
            SCHEMATIC DIAGRAM OF STREAM NETWORK
INPUT
 LINE    (V) ROUTING          (--->) DIVERSION OR PUMP FLOW

 NO.     (.) CONNECTOR        (<---) RETURN OF DIVERTED OR PUMPED FLOW

 13       18
          V
          V
 25       R18
          .
          .
 31       .        19
          .        .
          .        .
```

```
38    CP19.........
       V
       V
41     R19
       .
       .
47      .      21
       .       .
       .       .
54   11CP21.........
       .
       .
57      .      20
       .       V
       .       V
64      .     SR20
       .       V
       .       V
73      .      R20
       .       .
       .       .
79    CP21.........
       V
       V
82    SR21
       V
       V
88     R21
       .
       .
94      .      23
       .       .
       .       .
100   CP23.........
       V
       V
103   SR23
       V
       V
112    R23
       .
       .
118     .      22
       .       V
       .       V
125     .      R22
       .       .
       .       .
131     .       .      22A
       .       .       .
       .       .       .
138     .    11C22A.........
       .       .
       .       .
141   CP22A.........
       V
       V
144   R22A
       .
       .
150     .      25
       .       .
       .       .
157  11CP25.........
       .
       .
160     .      24
       .       V
       .       V
167     .     SR24
       .       V
```

```
        .       V
173     .       R24
        .       .
        .       .
179     CP25............
        V
        V
182     SR25
        .
        .
188     .       26
        .       V
        .       V
196     .       R26
        .       .
        .       .
202     .       .       27
        .       .       .
        .       .       .
210     .       11CP27..........
        .       V
        .       V
213     .       SR27
        .       .
        .       .
219     CP27............
        V
        V
222     R27 — (6 South corner of 39
        .
        .
228     .       34
        .       .
        .       .
235     .       .       33
        .       .       .
        .       .       .
242     .       CP33............
        .       V
        .       V
245     .       R33
        .       .
        .       .
251     .       .       35
        .       .       .
        .       .       .
258     .       11CP35..........
        .       .
        .       .
261     .       .       32
        .       .       .
        .       .       .
269     .       CP35............
        .       V
        .       V
272     .       R35 36
        .       .
        .       .
278     .       .       36
        .       .       .
        .       .       .
285     .       11CP36..........
        .       .
        .       .
288     .       .       37
        .       .       .
        .       .       .
296     .       CP36............
        .       V
        .       V
299     .       R36 39
```

```
        .       .
        .       .
305     .       .       38
        .       .       .
        .       .       .
312     .     CP38............
        .       V
        .       V
315     .     SR38
        .       V
        .       V
321     .     R38 37
        .       .
        .       .
327     .       .       39
        .       .       .
        .       .       .
335     .    I1CP39............
        .       .
        .       .
338   CP39............
      V
      V
341   R39 /42
      .
      .
347     .      40
        .      V
        .      V
354     .      R40
        .       .
        .       .
360     .       .       42
        .       .       .
        .       .       .
368     .    I1CP42............
        .       .
        .       .
371   CP42............
      V
      V
374   SR42
      V
      V
380   R42  44
      .
      .
386     .     41A1
        .      V
        .      V
392     .    SR41A1
        .       .
        .       .
400     .       .-------> 1D303
398     .    CP41A1
        .       V
        .       V
403     .    R41A1
        .       .
        .       .
409     .       .      41A2
        .       .       .
        .       .       .
415     .    CP41A2............
        .       V
        .       V
418     .    SR41A2
        .       .
        .       .
426     .       .-------> 2D303
424     .    CP41A2
```

```
        .       V
        .       V
429     .     R41A2
        .       .
        .       .
435     .       .       41A3
        .       .       .
        .       .       .
441     .     CP41A3............
        .       V
        .       V
444     .     SR41A3
        .       .
        .       .
452     .       .-------> 3D303
450     .     CP41A3
        .       V
        .       V
455     .     R41A3
        .       .
        .       .
461     .       .       41A
        .       .       .
        .       .       .
467     .     CP41A............
        .       V
        .       V
470     .     SR41A
        .       .
        .       .
478     .       .-------> 4D303
476     .     CP41A
        .       V
        .       V
481     .     R41A
        .       .
        .       .
487     .       .       41-1
        .       .       .
        .       .       .
494     .     CP41-1............
        .       V
        .       V
497     .     SR41-1
        .       .
        .       .
505     .       .-------> 5D303
503     .     CP41-1
        .       V
        .       V
508     .     R41-1
        .       .
        .       .
514     .       .       41-2
        .       .       .
        .       .       .
521     .     CP41-2............
        .       V
        .       V
524     .     SR41-2
        .       .
        .       .
535     .       .-------> 6D303
533     .     CP41-2
        .       V
        .       V
540     .     R41-2
        .       .
        .       .
546     .       .       41
        .       .       .
```

```
        .       .       .
554     .     CP41............
        .       V
        .       V
557     .     SR41
        .       .
        .       .
568     .       .-------> 7D303
566     .     CP41
        .       V
        .       V
573     .     R41
        .       .
        .       .
579     .       .       43-1
        .       .       .
        .       .       .
585     .     CP43-1............
        .       V
        .       V
588     .     SR43-1
        .       .
        .       .
599     .       .-------> 1D303A
597     .     CP43-1
        .       V
        .       V
604     .     R43-1
        .       .
        .       .
610     .       .       43-2
        .       .       .
        .       .       .
616     .     CP43-2............
        .       V
        .       V
619     .     SR43-2
        .       .
        .       .
627     .       .-------> 2D303A
625     .     CP43-2
        .       V
        .       V
630     .     R43-2
        .       .
        .       .
636     .       .       43-3
        .       .       .
        .       .       .
642     .     CP43-3............
        .       V
        .       V
645     .     SR43-3
        .       .
        .       .
653     .       .-------> 3D303A
651     .     CP43-3
        .       V
        .       V
656     .     R43-3
        .       .
        .       .
662     .       .       43-4
        .       .       .
        .       .       .
668     .     CP43-4............
        .       V
        .       V
671     .     SR43-4
        .       .
        .       .
```

```
679      .        .-------> DI43-4
677      .    CP43-4
         .      V
         .      V
682      .    R43-4
         .      .
         .      .
688      .      .      43-5
         .      .        .
         .      .        .
694      .    CP43-5............
         .      V
         .      V
697      .    SR43-5
         .      .
         .      .
708      .        .-------> DI43-5
706      .    CP43-5
         .      V
         .      V
713      .    R43-5
         .      .
         .      .
719      .      .      43-6
         .      .        .
         .      .        .
725      .    CP43-6............
         .      V
         .      V
728      .    SR43-6
         .      .
         .      .
739      .        .-------> DI43-6
737      .    CP43-6
         .      V
         .      V
744      .    R43-6
         .      .
         .      .
750      .      .      43-7
         .      .        .
         .      .        .
756      .    CP43-7............
         .      V
         .      V
759      .    SR43-7
         .      .
         .      .
767      .        .-------> DI43-7
765      .    CP43-7
         .      V
         .      V
770      .    R43-7
         .      .
         .      .
776      .      .      43-8
         .      .        .
         .      .        .
782      .    CP43-8............
         .      V
         .      V
785      .    SR43-8
         .      .
         .      .
796      .        .-------> DI43-8
794      .    CP43-8
         .      V
         .      V
801      .    R43-8
         .      .
         .      .
```

```
807     .       .       43
      .       .       .
      .       .       .
813     .     I1CP43............
      .       .
      .       .
816   CP43............
      V
      V
819   SR43
      .
      .
832     .-------->   DI43
830   CP43
      V
      V
835   RD43
      .
      .
843     .       .<-------  DI43-4
841     .     CP43-4
      .       V
      .       V
844     .     RD43-4
      .       .
      .       .
852     .       .       .<-------  DI43-5
850     .       .     CP43-5
      .       .       V
      .       .       V
853     .       .     RD43-5
      .       .       .
      .       .       .
859     .     I1CWT4............
      .       .
      .       .
864     .       .       .<-------  DI43-6
862     .       .     CP43-6
      .       .       V
      .       .       V
865     .       .     RD43-6
      .       .       .
      .       .       .
871     .     I2CWT4............
      .       .
      .       .
876     .       .       .<-------  DI43-7
874     .       .     CP43-7
      .       .       V
      .       .       V
877     .       .     RD43-7
      .       .       .
      .       .       .
883     .     I3CWT4............
      .       .
      .       .
888     .       .       .<-------  DI43-8
886     .       .     CP43-8
      .       .       V
      .       .       V
889     .       .     RD43-8
      .       .       .
      .       .       .
895     .     I4CWT4............
      .       .
      .       .
898     .       .       44
      .       .       .
      .       .       .
905     .     I5CWT4............
      .       .
```

```
908   16CWT4............
        .
        .
911     .     45-1
        .       .
        .       .
919     .       .       .<-------   DI43
917     .       .     CP43
        .       .       .
        .       .       .
920     .   CP45-1............
        .     V
        .     V
923     .   SR45-1
        .       .
        .       .
932     .       .-------> DI45-1
930     .   CP45-1
        .     V
        .     V
935     .   R45-1
        .       .
        .       .
941     .       .       45
        .       .       .
        .       .       .
949     .   CP45............
        .     V
        .     V
952     .   SR45
        .       .
        .       .
961     .       .------->   DI45
959     .   CP45
        .     V
        .     V
964     .   R45
        .       .
        .       .
970     .       .     46-1
        .       .       .
        .       .       .
977     .   CP46-1............
        .     V
        .     V
980     .   SR46-1
        .       .
        .       .
989     .       .-------> DI46-1
987     .   CP46-1
        .     V
        .     V
992     .   R46-1
        .       .
        .       .
998     .       .       46
        .       .       .
        .       .       .
1006    .   11CP46............
        .       .
        .       .
1009    .       .       215B
        .       .       V
        .       .       V
1015    .       .     R215B
        .       .       .
        .       .       .
1021    .       .       .       232A
        .       .       .       .
        .       .       .       .
```

```
1028    .     .    CP232A............
      .     .     V
      .     .     V
1031    .     .   R232A
      .     .     .
      .     .     .
1037    .     .     .      28
      .     .     .      .
      .     .     .      .
1045    .     .    CP28............
      .     .     V
      .     .     V
1048    .     .    R28
      .     .     .
      .     .     .
1054    .     .     .      30
      .     .     .      .
      .     .     .      .
1061    .     .   I1CP30............
      .     .     .
      .     .     .
1064    .     .     .      29
      .     .     .      V
      .     .     .      V
1071    .     .     .     SR29
      .     .     .      V
      .     .     .      V
1077    .     .     .      R29
      .     .     .      .
      .     .     .      .
1083    .     .    CP30............
      .     .     V
      .     .     V
1086    .     .    R30
      .     .     .
      .     .     .
1092    .     .     .      31
      .     .     .      .
      .     .     .      .
1100    .     .    CP31............
      .     .     V
      .     .     V
1103    .     .    R31
      .     .     .
      .     .     .
1109    .    CP46............
      .    V
      .    V
1112    .    SR46
      .    V
      .    V
1118    .    R46
      .    .
      .    .
1126    .     .      .<-------  DI45-1
1124    .     .   CP45-1
      .     .     V
      .     .     V
1127    .     .   RD45-1
      .     .     .
      .     .     .
1135    .     .     .      .<-------   DI45
1133    .     .     .     CP45
      .     .     .      V
      .     .     .      V
1136    .     .     .     RD45
      .     .     .      .
      .     .     .      .
1142    .     .   I7CWT4............
      .     .     .
      .     .     .
```

```
1147      .      .      .      .<------- DI46-1
1145      .      .      .    CP46-1
        .      .      .      V
        .      .      .      V
1148      .      .      .    RD46-1
        .      .      .      .
        .      .      .      .
1154      .      .    I8CWT4.............
        .      .      .
        .      .      .
1157      .      .      .      WT4
        .      .      .      .
        .      .      .      .
1164      .      .    I9CWT4.............
        .      .      .
        .      .      .
1167      .    I10WT4.............
        .      .
        .      .
1170    CPWT4.............
        .
        .
1174      .------->    OUT
1173    DIVERT
        V
        V
1177    RS47
```

(***) RUNOFF ALSO COMPUTED AT THIS LOCATION

```
1*************************************                    *************************************
*                                   *                    *                                   *
*  FLOOD HYDROGRAPH PACKAGE  (HEC-1) *                    *      U.S. ARMY CORPS OF ENGINEERS *
*        SEPTEMBER 1990              *                    *   HYDROLOGIC ENGINEERING CENTER   *
*         VERSION 4.0                *                    *        609 SECOND STREET          *
*                                   *                    *     DAVIS, CALIFORNIA 95616       *
* RUN DATE  04/21/1993  TIME  15:33:22 *                  *          (916) 756-1104           *
*                                   *                    *                                   *
*************************************                    *************************************
```

HYDROLOGY RUN FOR WHITE TANKS ADMS --- WATERSHED CONTRIBUTING TO WT#4
100-YEAR, 24-HOUR STORM TUT4.
NO BREAKOUTAT TUTHILL DIKE OR ALONG JACKRABBIT TRAIL. ALL FLOW IS
CONVEYED TO WT#4.

RAINFALL OF PMP 6-HOUR LOCAL STORM AS PER HYDRO-49 PROCEDURE

```
 11 IO        OUTPUT CONTROL VARIABLES
                IPRNT          5  PRINT CONTROL
                IPLOT          0  PLOT CONTROL
                QSCAL         0.  HYDROGRAPH PLOT SCALE

   IT        HYDROGRAPH TIME DATA
                NMIN           5  MINUTES IN COMPUTATION INTERVAL
               IDATE     1    0  STARTING DATE
               ITIME        0000  STARTING TIME
                  NQ         300  NUMBER OF HYDROGRAPH ORDINATES
              NDDATE     2    0  ENDING DATE
              NDTIME        0055  ENDING TIME
              ICENT          19  CENTURY MARK

            COMPUTATION INTERVAL     .08 HOURS
               TOTAL TIME BASE   24.92 HOURS

       ENGLISH UNITS
```

DRAINAGE AREA SQUARE MILES
PRECIPITATION DEPTH INCHES
LENGTH, ELEVATION FEET
FLOW CUBIC FEET PER SECOND
STORAGE VOLUME ACRE-FEET
SURFACE AREA ACRES
TEMPERATURE DEGREES FAHRENHEIT

WARNING --- ROUTED OUTFLOW (10589.) IS GREATER THAN MAXIMUM OUTFLOW (9959.) IN STORAGE-OUTFLOW TABLE 1
WARNING --- ROUTED OUTFLOW (10586.) IS GREATER THAN MAXIMUM OUTFLOW (9959.) IN STORAGE-OUTFLOW TABLE
WARNING --- ROUTED OUTFLOW (9988.) IS GREATER THAN MAXIMUM OUTFLOW (9959.) IN STORAGE-OUTFLOW TABLE
WARNING --- ROUTED OUTFLOW (10643.) IS GREATER THAN MAXIMUM OUTFLOW (9959.) IN STORAGE-OUTFLOW TABLE
WARNING --- ROUTED OUTFLOW (3140.) IS GREATER THAN MAXIMUM OUTFLOW (2963.) IN STORAGE-OUTFLOW TABLE 2
WARNING --- ROUTED OUTFLOW (3355.) IS GREATER THAN MAXIMUM OUTFLOW (2963.) IN STORAGE-OUTFLOW TABLE
WARNING --- ROUTED OUTFLOW (3242.) IS GREATER THAN MAXIMUM OUTFLOW (2963.) IN STORAGE-OUTFLOW TABLE
WARNING --- ROUTED OUTFLOW (2966.) IS GREATER THAN MAXIMUM OUTFLOW (2963.) IN STORAGE-OUTFLOW TABLE 3
WARNING --- ROUTED OUTFLOW (3290.) IS GREATER THAN MAXIMUM OUTFLOW (3244.) IN STORAGE-OUTFLOW TABLE
WARNING --- ROUTED OUTFLOW (3299.) IS GREATER THAN MAXIMUM OUTFLOW (3244.) IN STORAGE-OUTFLOW TABLE
WARNING --- ROUTED OUTFLOW (3312.) IS GREATER THAN MAXIMUM OUTFLOW (3244.) IN STORAGE-OUTFLOW TABLE
WARNING --- ROUTED OUTFLOW (3269.) IS GREATER THAN MAXIMUM OUTFLOW (3244.) IN STORAGE-OUTFLOW TABLE
WARNING --- ROUTED OUTFLOW (3267.) IS GREATER THAN MAXIMUM OUTFLOW (3244.) IN STORAGE-OUTFLOW TABLE
WARNING --- ROUTED OUTFLOW (2105.) IS GREATER THAN MAXIMUM OUTFLOW (2000.) IN STORAGE-OUTFLOW TABLE 4
WARNING --- ROUTED OUTFLOW (5360.) IS GREATER THAN MAXIMUM OUTFLOW (2000.) IN STORAGE-OUTFLOW TABLE
WARNING --- ROUTED OUTFLOW (8248.) IS GREATER THAN MAXIMUM OUTFLOW (2000.) IN STORAGE-OUTFLOW TABLE
WARNING --- ROUTED OUTFLOW (10275.) IS GREATER THAN MAXIMUM OUTFLOW (2000.) IN STORAGE-OUTFLOW TABLE
WARNING --- ROUTED OUTFLOW (11259.) IS GREATER THAN MAXIMUM OUTFLOW (2000.) IN STORAGE-OUTFLOW TABLE
WARNING --- ROUTED OUTFLOW (11494.) IS GREATER THAN MAXIMUM OUTFLOW (2000.) IN STORAGE-OUTFLOW TABLE
WARNING --- ROUTED OUTFLOW (11361.) IS GREATER THAN MAXIMUM OUTFLOW (2000.) IN STORAGE-OUTFLOW TABLE
WARNING --- ROUTED OUTFLOW (10981.) IS GREATER THAN MAXIMUM OUTFLOW (2000.) IN STORAGE-OUTFLOW TABLE
WARNING --- ROUTED OUTFLOW (10372.) IS GREATER THAN MAXIMUM OUTFLOW (2000.) IN STORAGE-OUTFLOW TABLE
WARNING --- ROUTED OUTFLOW (9594.) IS GREATER THAN MAXIMUM OUTFLOW (2000.) IN STORAGE-OUTFLOW TABLE
WARNING --- ROUTED OUTFLOW (8717.) IS GREATER THAN MAXIMUM OUTFLOW (2000.) IN STORAGE-OUTFLOW TABLE
WARNING --- ROUTED OUTFLOW (7797.) IS GREATER THAN MAXIMUM OUTFLOW (2000.) IN STORAGE-OUTFLOW TABLE
WARNING --- ROUTED OUTFLOW (6889.) IS GREATER THAN MAXIMUM OUTFLOW (2000.) IN STORAGE-OUTFLOW TABLE
WARNING --- ROUTED OUTFLOW (6019.) IS GREATER THAN MAXIMUM OUTFLOW (2000.) IN STORAGE-OUTFLOW TABLE
WARNING --- ROUTED OUTFLOW (5202.) IS GREATER THAN MAXIMUM OUTFLOW (2000.) IN STORAGE-OUTFLOW TABLE
WARNING --- ROUTED OUTFLOW (4456.) IS GREATER THAN MAXIMUM OUTFLOW (2000.) IN STORAGE-OUTFLOW TABLE
WARNING --- ROUTED OUTFLOW (3800.) IS GREATER THAN MAXIMUM OUTFLOW (2000.) IN STORAGE-OUTFLOW TABLE
WARNING --- ROUTED OUTFLOW (3240.) IS GREATER THAN MAXIMUM OUTFLOW (2000.) IN STORAGE-OUTFLOW TABLE
WARNING --- ROUTED OUTFLOW (2771.) IS GREATER THAN MAXIMUM OUTFLOW (2000.) IN STORAGE-OUTFLOW TABLE

```
WARNING --- ROUTED OUTFLOW (  2382.) IS GREATER THAN MAXIMUM OUTFLOW (  2000.) IN STORAGE-OUTFLOW TABLE
WARNING --- ROUTED OUTFLOW (  2064.) IS GREATER THAN MAXIMUM OUTFLOW (  2000.) IN STORAGE-OUTFLOW TABLE
WARNING --- ROUTED OUTFLOW (  2276.) IS GREATER THAN MAXIMUM OUTFLOW (   679.) IN STORAGE-OUTFLOW TABLE 5
WARNING --- ROUTED OUTFLOW (  4715.) IS GREATER THAN MAXIMUM OUTFLOW (   679.) IN STORAGE-OUTFLOW TABLE
WARNING --- ROUTED OUTFLOW (  5988.) IS GREATER THAN MAXIMUM OUTFLOW (   679.) IN STORAGE-OUTFLOW TABLE
WARNING --- ROUTED OUTFLOW (  6313.) IS GREATER THAN MAXIMUM OUTFLOW (   679.) IN STORAGE-OUTFLOW TABLE
WARNING --- ROUTED OUTFLOW (  6089.) IS GREATER THAN MAXIMUM OUTFLOW (   679.) IN STORAGE-OUTFLOW TABLE
WARNING --- ROUTED OUTFLOW (  5597.) IS GREATER THAN MAXIMUM OUTFLOW (   679.) IN STORAGE-OUTFLOW TABLE
WARNING --- ROUTED OUTFLOW (  5002.) IS GREATER THAN MAXIMUM OUTFLOW (   679.) IN STORAGE-OUTFLOW TABLE
WARNING --- ROUTED OUTFLOW (  4396.) IS GREATER THAN MAXIMUM OUTFLOW (   679.) IN STORAGE-OUTFLOW TABLE
WARNING --- ROUTED OUTFLOW (  3828.) IS GREATER THAN MAXIMUM OUTFLOW (   679.) IN STORAGE-OUTFLOW TABLE
WARNING --- ROUTED OUTFLOW (  3319.) IS GREATER THAN MAXIMUM OUTFLOW (   679.) IN STORAGE-OUTFLOW TABLE
WARNING --- ROUTED OUTFLOW (  2873.) IS GREATER THAN MAXIMUM OUTFLOW (   679.) IN STORAGE-OUTFLOW TABLE
WARNING --- ROUTED OUTFLOW (  2490.) IS GREATER THAN MAXIMUM OUTFLOW (   679.) IN STORAGE-OUTFLOW TABLE
WARNING --- ROUTED OUTFLOW (  2163.) IS GREATER THAN MAXIMUM OUTFLOW (   679.) IN STORAGE-OUTFLOW TABLE
WARNING --- ROUTED OUTFLOW (  1887.) IS GREATER THAN MAXIMUM OUTFLOW (   679.) IN STORAGE-OUTFLOW TABLE
WARNING --- ROUTED OUTFLOW (  1650.) IS GREATER THAN MAXIMUM OUTFLOW (   679.) IN STORAGE-OUTFLOW TABLE
WARNING --- ROUTED OUTFLOW (  1440.) IS GREATER THAN MAXIMUM OUTFLOW (   679.) IN STORAGE-OUTFLOW TABLE
WARNING --- ROUTED OUTFLOW (  1250.) IS GREATER THAN MAXIMUM OUTFLOW (   679.) IN STORAGE-OUTFLOW TABLE
WARNING --- ROUTED OUTFLOW (  1083.) IS GREATER THAN MAXIMUM OUTFLOW (   679.) IN STORAGE-OUTFLOW TABLE
WARNING --- ROUTED OUTFLOW (   965.) IS GREATER THAN MAXIMUM OUTFLOW (   679.) IN STORAGE-OUTFLOW TABLE
WARNING --- ROUTED OUTFLOW (   899.) IS GREATER THAN MAXIMUM OUTFLOW (   679.) IN STORAGE-OUTFLOW TABLE
WARNING --- ROUTED OUTFLOW (   849.) IS GREATER THAN MAXIMUM OUTFLOW (   679.) IN STORAGE-OUTFLOW TABLE
WARNING --- ROUTED OUTFLOW (   799.) IS GREATER THAN MAXIMUM OUTFLOW (   679.) IN STORAGE-OUTFLOW TABLE
WARNING --- ROUTED OUTFLOW (   749.) IS GREATER THAN MAXIMUM OUTFLOW (   679.) IN STORAGE-OUTFLOW TABLE
WARNING --- ROUTED OUTFLOW (   699.) IS GREATER THAN MAXIMUM OUTFLOW (   679.) IN STORAGE-OUTFLOW TABLE
WARNING --- ROUTED OUTFLOW (  1063.) IS GREATER THAN MAXIMUM OUTFLOW (   679.) IN STORAGE-OUTFLOW TABLE
WARNING --- ROUTED OUTFLOW (  2869.) IS GREATER THAN MAXIMUM OUTFLOW (   679.) IN STORAGE-OUTFLOW TABLE
WARNING --- ROUTED OUTFLOW (  4712.) IS GREATER THAN MAXIMUM OUTFLOW (   679.) IN STORAGE-OUTFLOW TABLE
WARNING --- ROUTED OUTFLOW (  5780.) IS GREATER THAN MAXIMUM OUTFLOW (   679.) IN STORAGE-OUTFLOW TABLE
WARNING --- ROUTED OUTFLOW (  6093.) IS GREATER THAN MAXIMUM OUTFLOW (   679.) IN STORAGE-OUTFLOW TABLE
WARNING --- ROUTED OUTFLOW (  5908.) IS GREATER THAN MAXIMUM OUTFLOW (   679.) IN STORAGE-OUTFLOW TABLE
WARNING --- ROUTED OUTFLOW (  5456.) IS GREATER THAN MAXIMUM OUTFLOW (   679.) IN STORAGE-OUTFLOW TABLE
WARNING --- ROUTED OUTFLOW (  4894.) IS GREATER THAN MAXIMUM OUTFLOW (   679.) IN STORAGE-OUTFLOW TABLE
WARNING --- ROUTED OUTFLOW (  4314.) IS GREATER THAN MAXIMUM OUTFLOW (   679.) IN STORAGE-OUTFLOW TABLE
WARNING --- ROUTED OUTFLOW (  3764.) IS GREATER THAN MAXIMUM OUTFLOW (   679.) IN STORAGE-OUTFLOW TABLE
```

```
WARNING --- ROUTED OUTFLOW (  3268.) IS GREATER THAN MAXIMUM OUTFLOW (   679.) IN STORAGE-OUTFLOW TABLE
WARNING --- ROUTED OUTFLOW (  2833.) IS GREATER THAN MAXIMUM OUTFLOW (   679.) IN STORAGE-OUTFLOW TABLE
WARNING --- ROUTED OUTFLOW (  2457.) IS GREATER THAN MAXIMUM OUTFLOW (   679.) IN STORAGE-OUTFLOW TABLE
WARNING --- ROUTED OUTFLOW (  2136.) IS GREATER THAN MAXIMUM OUTFLOW (   679.) IN STORAGE-OUTFLOW TABLE
WARNING --- ROUTED OUTFLOW (  1863.) IS GREATER THAN MAXIMUM OUTFLOW (   679.) IN STORAGE-OUTFLOW TABLE
WARNING --- ROUTED OUTFLOW (  1627.) IS GREATER THAN MAXIMUM OUTFLOW (   679.) IN STORAGE-OUTFLOW TABLE
WARNING --- ROUTED OUTFLOW (  1418.) IS GREATER THAN MAXIMUM OUTFLOW (   679.) IN STORAGE-OUTFLOW TABLE
WARNING --- ROUTED OUTFLOW (  1231.) IS GREATER THAN MAXIMUM OUTFLOW (   679.) IN STORAGE-OUTFLOW TABLE
WARNING --- ROUTED OUTFLOW (  1077.) IS GREATER THAN MAXIMUM OUTFLOW (   679.) IN STORAGE-OUTFLOW TABLE
WARNING --- ROUTED OUTFLOW (   970.) IS GREATER THAN MAXIMUM OUTFLOW (   679.) IN STORAGE-OUTFLOW TABLE
WARNING --- ROUTED OUTFLOW (   899.) IS GREATER THAN MAXIMUM OUTFLOW (   679.) IN STORAGE-OUTFLOW TABLE
WARNING --- ROUTED OUTFLOW (   843.) IS GREATER THAN MAXIMUM OUTFLOW (   679.) IN STORAGE-OUTFLOW TABLE
WARNING --- ROUTED OUTFLOW (   792.) IS GREATER THAN MAXIMUM OUTFLOW (   679.) IN STORAGE-OUTFLOW TABLE
WARNING --- ROUTED OUTFLOW (   742.) IS GREATER THAN MAXIMUM OUTFLOW (   679.) IN STORAGE-OUTFLOW TABLE
WARNING --- ROUTED OUTFLOW (   692.) IS GREATER THAN MAXIMUM OUTFLOW (   679.) IN STORAGE-OUTFLOW TABLE
WARNING --- ROUTED OUTFLOW (  1588.) IS GREATER THAN MAXIMUM OUTFLOW (   679.) IN STORAGE-OUTFLOW TABLE
WARNING --- ROUTED OUTFLOW (  3223.) IS GREATER THAN MAXIMUM OUTFLOW (   679.) IN STORAGE-OUTFLOW TABLE
WARNING --- ROUTED OUTFLOW (  4725.) IS GREATER THAN MAXIMUM OUTFLOW (   679.) IN STORAGE-OUTFLOW TABLE
WARNING --- ROUTED OUTFLOW (  5624.) IS GREATER THAN MAXIMUM OUTFLOW (   679.) IN STORAGE-OUTFLOW TABLE
WARNING --- ROUTED OUTFLOW (  5903.) IS GREATER THAN MAXIMUM OUTFLOW (   679.) IN STORAGE-OUTFLOW TABLE
WARNING --- ROUTED OUTFLOW (  5739.) IS GREATER THAN MAXIMUM OUTFLOW (   679.) IN STORAGE-OUTFLOW TABLE
WARNING --- ROUTED OUTFLOW (  5320.) IS GREATER THAN MAXIMUM OUTFLOW (   679.) IN STORAGE-OUTFLOW TABLE
WARNING --- ROUTED OUTFLOW (  4788.) IS GREATER THAN MAXIMUM OUTFLOW (   679.) IN STORAGE-OUTFLOW TABLE
WARNING --- ROUTED OUTFLOW (  4232.) IS GREATER THAN MAXIMUM OUTFLOW (   679.) IN STORAGE-OUTFLOW TABLE
WARNING --- ROUTED OUTFLOW (  3701.) IS GREATER THAN MAXIMUM OUTFLOW (   679.) IN STORAGE-OUTFLOW TABLE
WARNING --- ROUTED OUTFLOW (  3218.) IS GREATER THAN MAXIMUM OUTFLOW (   679.) IN STORAGE-OUTFLOW TABLE
WARNING --- ROUTED OUTFLOW (  2793.) IS GREATER THAN MAXIMUM OUTFLOW (   679.) IN STORAGE-OUTFLOW TABLE
WARNING --- ROUTED OUTFLOW (  2424.) IS GREATER THAN MAXIMUM OUTFLOW (   679.) IN STORAGE-OUTFLOW TABLE
WARNING --- ROUTED OUTFLOW (  2109.) IS GREATER THAN MAXIMUM OUTFLOW (   679.) IN STORAGE-OUTFLOW TABLE
WARNING --- ROUTED OUTFLOW (  1839.) IS GREATER THAN MAXIMUM OUTFLOW (   679.) IN STORAGE-OUTFLOW TABLE
WARNING --- ROUTED OUTFLOW (  1604.) IS GREATER THAN MAXIMUM OUTFLOW (   679.) IN STORAGE-OUTFLOW TABLE
WARNING --- ROUTED OUTFLOW (  1397.) IS GREATER THAN MAXIMUM OUTFLOW (   679.) IN STORAGE-OUTFLOW TABLE
WARNING --- ROUTED OUTFLOW (  1217.) IS GREATER THAN MAXIMUM OUTFLOW (   679.) IN STORAGE-OUTFLOW TABLE
WARNING --- ROUTED OUTFLOW (  1073.) IS GREATER THAN MAXIMUM OUTFLOW (   679.) IN STORAGE-OUTFLOW TABLE
WARNING --- ROUTED OUTFLOW (   970.) IS GREATER THAN MAXIMUM OUTFLOW (   679.) IN STORAGE-OUTFLOW TABLE
WARNING --- ROUTED OUTFLOW (   896.) IS GREATER THAN MAXIMUM OUTFLOW (   679.) IN STORAGE-OUTFLOW TABLE
```

WARNING --- ROUTED OUTFLOW (838.) IS GREATER THAN MAXIMUM OUTFLOW (679.) IN STORAGE-OUTFLOW TABLE

WARNING --- ROUTED OUTFLOW (785.) IS GREATER THAN MAXIMUM OUTFLOW (679.) IN STORAGE-OUTFLOW TABLE

WARNING --- ROUTED OUTFLOW (735.) IS GREATER THAN MAXIMUM OUTFLOW (679.) IN STORAGE-OUTFLOW TABLE

WARNING --- ROUTED OUTFLOW (686.) IS GREATER THAN MAXIMUM OUTFLOW (679.) IN STORAGE-OUTFLOW TABLE

WARNING --- ROUTED OUTFLOW (858.) IS GREATER THAN MAXIMUM OUTFLOW (679.) IN STORAGE-OUTFLOW TABLE

WARNING --- ROUTED OUTFLOW (2007.) IS GREATER THAN MAXIMUM OUTFLOW (679.) IN STORAGE-OUTFLOW TABLE

WARNING --- ROUTED OUTFLOW (3468.) IS GREATER THAN MAXIMUM OUTFLOW (679.) IN STORAGE-OUTFLOW TABLE

WARNING --- ROUTED OUTFLOW (4735.) IS GREATER THAN MAXIMUM OUTFLOW (679.) IN STORAGE-OUTFLOW TABLE

WARNING --- ROUTED OUTFLOW (5499.) IS GREATER THAN MAXIMUM OUTFLOW (679.) IN STORAGE-OUTFLOW TABLE

WARNING --- ROUTED OUTFLOW (5738.) IS GREATER THAN MAXIMUM OUTFLOW (679.) IN STORAGE-OUTFLOW TABLE

WARNING --- ROUTED OUTFLOW (5583.) IS GREATER THAN MAXIMUM OUTFLOW (679.) IN STORAGE-OUTFLOW TABLE

WARNING --- ROUTED OUTFLOW (5191.) IS GREATER THAN MAXIMUM OUTFLOW (679.) IN STORAGE-OUTFLOW TABLE

WARNING --- ROUTED OUTFLOW (4685.) IS GREATER THAN MAXIMUM OUTFLOW (679.) IN STORAGE-OUTFLOW TABLE

WARNING --- ROUTED OUTFLOW (4151.) IS GREATER THAN MAXIMUM OUTFLOW (679.) IN STORAGE-OUTFLOW TABLE

WARNING --- ROUTED OUTFLOW (3638.) IS GREATER THAN MAXIMUM OUTFLOW (679.) IN STORAGE-OUTFLOW TABLE

WARNING --- ROUTED OUTFLOW (3168.) IS GREATER THAN MAXIMUM OUTFLOW (679.) IN STORAGE-OUTFLOW TABLE

WARNING --- ROUTED OUTFLOW (2753.) IS GREATER THAN MAXIMUM OUTFLOW (679.) IN STORAGE-OUTFLOW TABLE

WARNING --- ROUTED OUTFLOW (2392.) IS GREATER THAN MAXIMUM OUTFLOW (679.) IN STORAGE-OUTFLOW TABLE

WARNING --- ROUTED OUTFLOW (2082.) IS GREATER THAN MAXIMUM OUTFLOW (679.) IN STORAGE-OUTFLOW TABLE

WARNING --- ROUTED OUTFLOW (1814.) IS GREATER THAN MAXIMUM OUTFLOW (679.) IN STORAGE-OUTFLOW TABLE

WARNING --- ROUTED OUTFLOW (1581.) IS GREATER THAN MAXIMUM OUTFLOW (679.) IN STORAGE-OUTFLOW TABLE

WARNING --- ROUTED OUTFLOW (1377.) IS GREATER THAN MAXIMUM OUTFLOW (679.) IN STORAGE-OUTFLOW TABLE

WARNING --- ROUTED OUTFLOW (1205.) IS GREATER THAN MAXIMUM OUTFLOW (679.) IN STORAGE-OUTFLOW TABLE

WARNING --- ROUTED OUTFLOW (1069.) IS GREATER THAN MAXIMUM OUTFLOW (679.) IN STORAGE-OUTFLOW TABLE

WARNING --- ROUTED OUTFLOW (968.) IS GREATER THAN MAXIMUM OUTFLOW (679.) IN STORAGE-OUTFLOW TABLE

WARNING --- ROUTED OUTFLOW (893.) IS GREATER THAN MAXIMUM OUTFLOW (679.) IN STORAGE-OUTFLOW TABLE

WARNING --- ROUTED OUTFLOW (833.) IS GREATER THAN MAXIMUM OUTFLOW (679.) IN STORAGE-OUTFLOW TABLE

WARNING --- ROUTED OUTFLOW (779.) IS GREATER THAN MAXIMUM OUTFLOW (679.) IN STORAGE-OUTFLOW TABLE

WARNING --- ROUTED OUTFLOW (728.) IS GREATER THAN MAXIMUM OUTFLOW (679.) IN STORAGE-OUTFLOW TABLE

6

WARNING --- ROUTED OUTFLOW (4304.) IS GREATER THAN MAXIMUM OUTFLOW (4138.) IN STORAGE-OUTFLOW TABLE

WARNING --- ROUTED OUTFLOW (6074.) IS GREATER THAN MAXIMUM OUTFLOW (4138.) IN STORAGE-OUTFLOW TABLE

WARNING --- ROUTED OUTFLOW (7261.) IS GREATER THAN MAXIMUM OUTFLOW (4138.) IN STORAGE-OUTFLOW TABLE

WARNING --- ROUTED OUTFLOW (7474.) IS GREATER THAN MAXIMUM OUTFLOW (4138.) IN STORAGE-OUTFLOW TABLE

WARNING --- ROUTED OUTFLOW (6818.) IS GREATER THAN MAXIMUM OUTFLOW (4138.) IN STORAGE-OUTFLOW TABLE

WARNING --- ROUTED OUTFLOW (5756.) IS GREATER THAN MAXIMUM OUTFLOW (4138.) IN STORAGE-OUTFLOW TABLE

WARNING --- ROUTED OUTFLOW (4601.) IS GREATER THAN MAXIMUM OUTFLOW (4138.) IN STORAGE-OUTFLOW TABLE

WARNING --- ROUTED OUTFLOW (4550.) IS GREATER THAN MAXIMUM OUTFLOW (4138.) IN STORAGE-OUTFLOW TABLE

WARNING --- ROUTED OUTFLOW (5531.) IS GREATER THAN MAXIMUM OUTFLOW (4138.) IN STORAGE-OUTFLOW TABLE

WARNING --- ROUTED OUTFLOW (6068.) IS GREATER THAN MAXIMUM OUTFLOW (4138.) IN STORAGE-OUTFLOW TABLE

WARNING --- ROUTED OUTFLOW (6160.) IS GREATER THAN MAXIMUM OUTFLOW (4138.) IN STORAGE-OUTFLOW TABLE

WARNING --- ROUTED OUTFLOW (5923.) IS GREATER THAN MAXIMUM OUTFLOW (4138.) IN STORAGE-OUTFLOW TABLE

WARNING --- ROUTED OUTFLOW (5486.) IS GREATER THAN MAXIMUM OUTFLOW (4138.) IN STORAGE-OUTFLOW TABLE

WARNING --- ROUTED OUTFLOW (4952.) IS GREATER THAN MAXIMUM OUTFLOW (4138.) IN STORAGE-OUTFLOW TABLE

WARNING --- ROUTED OUTFLOW (4390.) IS GREATER THAN MAXIMUM OUTFLOW (4138.) IN STORAGE-OUTFLOW TABLE

WARNING --- ROUTED OUTFLOW (4957.) IS GREATER THAN MAXIMUM OUTFLOW (4138.) IN STORAGE-OUTFLOW TABLE

WARNING --- ROUTED OUTFLOW (6436.) IS GREATER THAN MAXIMUM OUTFLOW (4138.) IN STORAGE-OUTFLOW TABLE

WARNING --- ROUTED OUTFLOW (7241.) IS GREATER THAN MAXIMUM OUTFLOW (4138.) IN STORAGE-OUTFLOW TABLE

WARNING --- ROUTED OUTFLOW (7159.) IS GREATER THAN MAXIMUM OUTFLOW (4138.) IN STORAGE-OUTFLOW TABLE

WARNING --- ROUTED OUTFLOW (6405.) IS GREATER THAN MAXIMUM OUTFLOW (4138.) IN STORAGE-OUTFLOW TABLE

WARNING --- ROUTED OUTFLOW (5345.) IS GREATER THAN MAXIMUM OUTFLOW (4138.) IN STORAGE-OUTFLOW TABLE

WARNING --- ROUTED OUTFLOW (4267.) IS GREATER THAN MAXIMUM OUTFLOW (4138.) IN STORAGE-OUTFLOW TABLE

WARNING --- ROUTED OUTFLOW (4883.) IS GREATER THAN MAXIMUM OUTFLOW (4138.) IN STORAGE-OUTFLOW TABLE

WARNING --- ROUTED OUTFLOW (5676.) IS GREATER THAN MAXIMUM OUTFLOW (4138.) IN STORAGE-OUTFLOW TABLE

WARNING --- ROUTED OUTFLOW (6055.) IS GREATER THAN MAXIMUM OUTFLOW (4138.) IN STORAGE-OUTFLOW TABLE

WARNING --- ROUTED OUTFLOW (6043.) IS GREATER THAN MAXIMUM OUTFLOW (4138.) IN STORAGE-OUTFLOW TABLE

WARNING --- ROUTED OUTFLOW (5750.) IS GREATER THAN MAXIMUM OUTFLOW (4138.) IN STORAGE-OUTFLOW TABLE

WARNING --- ROUTED OUTFLOW (5291.) IS GREATER THAN MAXIMUM OUTFLOW (4138.) IN STORAGE-OUTFLOW TABLE

WARNING --- ROUTED OUTFLOW (4755.) IS GREATER THAN MAXIMUM OUTFLOW (4138.) IN STORAGE-OUTFLOW TABLE

WARNING --- ROUTED OUTFLOW (4199.) IS GREATER THAN MAXIMUM OUTFLOW (4138.) IN STORAGE-OUTFLOW TABLE

WARNING --- ROUTED OUTFLOW (5474.) IS GREATER THAN MAXIMUM OUTFLOW (4138.) IN STORAGE-OUTFLOW TABLE

WARNING --- ROUTED OUTFLOW (6654.) IS GREATER THAN MAXIMUM OUTFLOW (4138.) IN STORAGE-OUTFLOW TABLE

WARNING --- ROUTED OUTFLOW (7126.) IS GREATER THAN MAXIMUM OUTFLOW (4138.) IN STORAGE-OUTFLOW TABLE

WARNING --- ROUTED OUTFLOW (6829.) IS GREATER THAN MAXIMUM OUTFLOW (4138.) IN STORAGE-OUTFLOW TABLE

WARNING --- ROUTED OUTFLOW (6004.) IS GREATER THAN MAXIMUM OUTFLOW (4138.) IN STORAGE-OUTFLOW TABLE

WARNING --- ROUTED OUTFLOW (4968.) IS GREATER THAN MAXIMUM OUTFLOW (4138.) IN STORAGE-OUTFLOW TABLE

WARNING --- ROUTED OUTFLOW (4247.) IS GREATER THAN MAXIMUM OUTFLOW (4138.) IN STORAGE-OUTFLOW TABLE

WARNING --- ROUTED OUTFLOW (5140.) IS GREATER THAN MAXIMUM OUTFLOW (4138.) IN STORAGE-OUTFLOW TABLE

WARNING --- ROUTED OUTFLOW (5767.) IS GREATER THAN MAXIMUM OUTFLOW (4138.) IN STORAGE-OUTFLOW TABLE

WARNING --- ROUTED OUTFLOW (6011.) IS GREATER THAN MAXIMUM OUTFLOW (4138.) IN STORAGE-OUTFLOW TABLE

WARNING --- ROUTED OUTFLOW (5912.) IS GREATER THAN MAXIMUM OUTFLOW (4138.) IN STORAGE-OUTFLOW TABLE

WARNING --- ROUTED OUTFLOW (5573.) IS GREATER THAN MAXIMUM OUTFLOW (4138.) IN STORAGE-OUTFLOW TABLE

WARNING --- ROUTED OUTFLOW (5097.) IS GREATER THAN MAXIMUM OUTFLOW (4138.) IN STORAGE-OUTFLOW TABLE

```
WARNING --- ROUTED OUTFLOW (  4561.) IS GREATER THAN MAXIMUM OUTFLOW (  4138.) IN STORAGE-OUTFLOW TABLE
WARNING --- ROUTED OUTFLOW (  4582.) IS GREATER THAN MAXIMUM OUTFLOW (  4138.) IN STORAGE-OUTFLOW TABLE
WARNING --- ROUTED OUTFLOW (  5864.) IS GREATER THAN MAXIMUM OUTFLOW (  4138.) IN STORAGE-OUTFLOW TABLE
WARNING --- ROUTED OUTFLOW (  6752.) IS GREATER THAN MAXIMUM OUTFLOW (  4138.) IN STORAGE-OUTFLOW TABLE
WARNING --- ROUTED OUTFLOW (  6947.) IS GREATER THAN MAXIMUM OUTFLOW (  4138.) IN STORAGE-OUTFLOW TABLE
WARNING --- ROUTED OUTFLOW (  6488.) IS GREATER THAN MAXIMUM OUTFLOW (  4138.) IN STORAGE-OUTFLOW TABLE
WARNING --- ROUTED OUTFLOW (  5621.) IS GREATER THAN MAXIMUM OUTFLOW (  4138.) IN STORAGE-OUTFLOW TABLE
WARNING --- ROUTED OUTFLOW (  4617.) IS GREATER THAN MAXIMUM OUTFLOW (  4138.) IN STORAGE-OUTFLOW TABLE
WARNING --- ROUTED OUTFLOW (  4561.) IS GREATER THAN MAXIMUM OUTFLOW (  4138.) IN STORAGE-OUTFLOW TABLE
WARNING --- ROUTED OUTFLOW (  5333.) IS GREATER THAN MAXIMUM OUTFLOW (  4138.) IN STORAGE-OUTFLOW TABLE
WARNING --- ROUTED OUTFLOW (  5814.) IS GREATER THAN MAXIMUM OUTFLOW (  4138.) IN STORAGE-OUTFLOW TABLE
WARNING --- ROUTED OUTFLOW (  5941.) IS GREATER THAN MAXIMUM OUTFLOW (  4138.) IN STORAGE-OUTFLOW TABLE
WARNING --- ROUTED OUTFLOW (  5770.) IS GREATER THAN MAXIMUM OUTFLOW (  4138.) IN STORAGE-OUTFLOW TABLE
WARNING --- ROUTED OUTFLOW (  5394.) IS GREATER THAN MAXIMUM OUTFLOW (  4138.) IN STORAGE-OUTFLOW TABLE
WARNING --- ROUTED OUTFLOW (  4906.) IS GREATER THAN MAXIMUM OUTFLOW (  4138.) IN STORAGE-OUTFLOW TABLE
WARNING --- ROUTED OUTFLOW (  4372.) IS GREATER THAN MAXIMUM OUTFLOW (  4138.) IN STORAGE-OUTFLOW TABLE
WARNING --- ROUTED OUTFLOW (  4394.) IS GREATER THAN MAXIMUM OUTFLOW (  2273.) IN STORAGE-OUTFLOW TABLE
WARNING --- ROUTED OUTFLOW (  6433.) IS GREATER THAN MAXIMUM OUTFLOW (  2273.) IN STORAGE-OUTFLOW TABLE
WARNING --- ROUTED OUTFLOW (  8022.) IS GREATER THAN MAXIMUM OUTFLOW (  2273.) IN STORAGE-OUTFLOW TABLE
WARNING --- ROUTED OUTFLOW (  9060.) IS GREATER THAN MAXIMUM OUTFLOW (  2273.) IN STORAGE-OUTFLOW TABLE
WARNING --- ROUTED OUTFLOW (  9364.) IS GREATER THAN MAXIMUM OUTFLOW (  2273.) IN STORAGE-OUTFLOW TABLE
WARNING --- ROUTED OUTFLOW (  8960.) IS GREATER THAN MAXIMUM OUTFLOW (  2273.) IN STORAGE-OUTFLOW TABLE
WARNING --- ROUTED OUTFLOW (  7982.) IS GREATER THAN MAXIMUM OUTFLOW (  2273.) IN STORAGE-OUTFLOW TABLE
WARNING --- ROUTED OUTFLOW (  6732.) IS GREATER THAN MAXIMUM OUTFLOW (  2273.) IN STORAGE-OUTFLOW TABLE
WARNING --- ROUTED OUTFLOW (  5472.) IS GREATER THAN MAXIMUM OUTFLOW (  2273.) IN STORAGE-OUTFLOW TABLE
WARNING --- ROUTED OUTFLOW (  4280.) IS GREATER THAN MAXIMUM OUTFLOW (  2273.) IN STORAGE-OUTFLOW TABLE
WARNING --- ROUTED OUTFLOW (  3224.) IS GREATER THAN MAXIMUM OUTFLOW (  2273.) IN STORAGE-OUTFLOW TABLE
WARNING --- ROUTED OUTFLOW (  2509.) IS GREATER THAN MAXIMUM OUTFLOW (  2273.) IN STORAGE-OUTFLOW TABLE
WARNING --- ROUTED OUTFLOW (  2715.) IS GREATER THAN MAXIMUM OUTFLOW (  2273.) IN STORAGE-OUTFLOW TABLE
WARNING --- ROUTED OUTFLOW (  3473.) IS GREATER THAN MAXIMUM OUTFLOW (  2273.) IN STORAGE-OUTFLOW TABLE
WARNING --- ROUTED OUTFLOW (  4268.) IS GREATER THAN MAXIMUM OUTFLOW (  2273.) IN STORAGE-OUTFLOW TABLE
WARNING --- ROUTED OUTFLOW (  5067.) IS GREATER THAN MAXIMUM OUTFLOW (  2273.) IN STORAGE-OUTFLOW TABLE
WARNING --- ROUTED OUTFLOW (  5713.) IS GREATER THAN MAXIMUM OUTFLOW (  2273.) IN STORAGE-OUTFLOW TABLE
WARNING --- ROUTED OUTFLOW (  6061.) IS GREATER THAN MAXIMUM OUTFLOW (  2273.) IN STORAGE-OUTFLOW TABLE
WARNING --- ROUTED OUTFLOW (  6082.) IS GREATER THAN MAXIMUM OUTFLOW (  2273.) IN STORAGE-OUTFLOW TABLE
WARNING --- ROUTED OUTFLOW (  5835.) IS GREATER THAN MAXIMUM OUTFLOW (  2273.) IN STORAGE-OUTFLOW TABLE
```

WARNING --- ROUTED OUTFLOW (5407.) IS GREATER THAN MAXIMUM OUTFLOW (2273.) IN STORAGE-OUTFLOW TABLE

WARNING --- ROUTED OUTFLOW (4876.) IS GREATER THAN MAXIMUM OUTFLOW (2273.) IN STORAGE-OUTFLOW TABLE

WARNING --- ROUTED OUTFLOW (4305.) IS GREATER THAN MAXIMUM OUTFLOW (2273.) IN STORAGE-OUTFLOW TABLE

WARNING --- ROUTED OUTFLOW (3731.) IS GREATER THAN MAXIMUM OUTFLOW (2273.) IN STORAGE-OUTFLOW TABLE

WARNING --- ROUTED OUTFLOW (3154.) IS GREATER THAN MAXIMUM OUTFLOW (2273.) IN STORAGE-OUTFLOW TABLE

WARNING --- ROUTED OUTFLOW (2605.) IS GREATER THAN MAXIMUM OUTFLOW (2273.) IN STORAGE-OUTFLOW TABLE 8

WARNING --- ROUTED OUTFLOW (6128.) IS GREATER THAN MAXIMUM OUTFLOW (4546.) IN STORAGE-OUTFLOW TABLE

WARNING --- ROUTED OUTFLOW (8594.) IS GREATER THAN MAXIMUM OUTFLOW (4546.) IN STORAGE-OUTFLOW TABLE

WARNING --- ROUTED OUTFLOW (10576.) IS GREATER THAN MAXIMUM OUTFLOW (4546.) IN STORAGE-OUTFLOW TABLE

WARNING --- ROUTED OUTFLOW (11817.) IS GREATER THAN MAXIMUM OUTFLOW (4546.) IN STORAGE-OUTFLOW TABLE

WARNING --- ROUTED OUTFLOW (12037.) IS GREATER THAN MAXIMUM OUTFLOW (4546.) IN STORAGE-OUTFLOW TABLE

WARNING --- ROUTED OUTFLOW (11332.) IS GREATER THAN MAXIMUM OUTFLOW (4546.) IN STORAGE-OUTFLOW TABLE

WARNING --- ROUTED OUTFLOW (10111.) IS GREATER THAN MAXIMUM OUTFLOW (4546.) IN STORAGE-OUTFLOW TABLE

WARNING --- ROUTED OUTFLOW (8661.) IS GREATER THAN MAXIMUM OUTFLOW (4546.) IN STORAGE-OUTFLOW TABLE

WARNING --- ROUTED OUTFLOW (7363.) IS GREATER THAN MAXIMUM OUTFLOW (4546.) IN STORAGE-OUTFLOW TABLE

WARNING --- ROUTED OUTFLOW (6197.) IS GREATER THAN MAXIMUM OUTFLOW (4546.) IN STORAGE-OUTFLOW TABLE

WARNING --- ROUTED OUTFLOW (5120.) IS GREATER THAN MAXIMUM OUTFLOW (4546.) IN STORAGE-OUTFLOW TABLE 9

WARNING --- ROUTED OUTFLOW (12980.) IS GREATER THAN MAXIMUM OUTFLOW (12363.) IN STORAGE-OUTFLOW TABLE

WARNING --- ROUTED OUTFLOW (17090.) IS GREATER THAN MAXIMUM OUTFLOW (12363.) IN STORAGE-OUTFLOW TABLE

WARNING --- ROUTED OUTFLOW (19929.) IS GREATER THAN MAXIMUM OUTFLOW (12363.) IN STORAGE-OUTFLOW TABLE

WARNING --- ROUTED OUTFLOW (21227.) IS GREATER THAN MAXIMUM OUTFLOW (12363.) IN STORAGE-OUTFLOW TABLE

WARNING --- ROUTED OUTFLOW (20819.) IS GREATER THAN MAXIMUM OUTFLOW (12363.) IN STORAGE-OUTFLOW TABLE

WARNING --- ROUTED OUTFLOW (19075.) IS GREATER THAN MAXIMUM OUTFLOW (12363.) IN STORAGE-OUTFLOW TABLE

WARNING --- ROUTED OUTFLOW (16574.) IS GREATER THAN MAXIMUM OUTFLOW (12363.) IN STORAGE-OUTFLOW TABLE

WARNING --- ROUTED OUTFLOW (13936.) IS GREATER THAN MAXIMUM OUTFLOW (12363.) IN STORAGE-OUTFLOW TABLE

WARNING --- ROUTED OUTFLOW (15368.) IS GREATER THAN MAXIMUM OUTFLOW (12363.) IN STORAGE-OUTFLOW TABLE

WARNING --- ROUTED OUTFLOW (18737.) IS GREATER THAN MAXIMUM OUTFLOW (12363.) IN STORAGE-OUTFLOW TABLE

WARNING --- ROUTED OUTFLOW (20712.) IS GREATER THAN MAXIMUM OUTFLOW (12363.) IN STORAGE-OUTFLOW TABLE

WARNING --- ROUTED OUTFLOW (21046.) IS GREATER THAN MAXIMUM OUTFLOW (12363.) IN STORAGE-OUTFLOW TABLE

WARNING --- ROUTED OUTFLOW (19868.) IS GREATER THAN MAXIMUM OUTFLOW (12363.) IN STORAGE-OUTFLOW TABLE

WARNING --- ROUTED OUTFLOW (17676.) IS GREATER THAN MAXIMUM OUTFLOW (12363.) IN STORAGE-OUTFLOW TABLE

WARNING --- ROUTED OUTFLOW (15079.) IS GREATER THAN MAXIMUM OUTFLOW (12363.) IN STORAGE-OUTFLOW TABLE

WARNING --- ROUTED OUTFLOW (12542.) IS GREATER THAN MAXIMUM OUTFLOW (12363.) IN STORAGE-OUTFLOW TABLE

WARNING --- ROUTED OUTFLOW (12952.) IS GREATER THAN MAXIMUM OUTFLOW (12363.) IN STORAGE-OUTFLOW TABLE

WARNING --- ROUTED OUTFLOW (17349.) IS GREATER THAN MAXIMUM OUTFLOW (12363.) IN STORAGE-OUTFLOW TABLE

WARNING --- ROUTED OUTFLOW (19896.) IS GREATER THAN MAXIMUM OUTFLOW (12363.) IN STORAGE-OUTFLOW TABLE

WARNING --- ROUTED OUTFLOW (20950.) IS GREATER THAN MAXIMUM OUTFLOW (12363.) IN STORAGE-OUTFLOW TABLE

WARNING --- ROUTED OUTFLOW (20421.) IS GREATER THAN MAXIMUM OUTFLOW (12363.) IN STORAGE-OUTFLOW TABLE

WARNING --- ROUTED OUTFLOW (18653.) IS GREATER THAN MAXIMUM OUTFLOW (12363.) IN STORAGE-OUTFLOW TABLE

WARNING --- ROUTED OUTFLOW (16213.) IS GREATER THAN MAXIMUM OUTFLOW (12363.) IN STORAGE-OUTFLOW TABLE

WARNING --- ROUTED OUTFLOW (13637.) IS GREATER THAN MAXIMUM OUTFLOW (12363.) IN STORAGE-OUTFLOW TABLE 10

WARNING --- ROUTED OUTFLOW (6535.) IS GREATER THAN MAXIMUM OUTFLOW (3324.) IN STORAGE-OUTFLOW TABLE

WARNING --- ROUTED OUTFLOW (10684.) IS GREATER THAN MAXIMUM OUTFLOW (3324.) IN STORAGE-OUTFLOW TABLE

WARNING --- ROUTED OUTFLOW (14310.) IS GREATER THAN MAXIMUM OUTFLOW (3324.) IN STORAGE-OUTFLOW TABLE

WARNING --- ROUTED OUTFLOW (16557.) IS GREATER THAN MAXIMUM OUTFLOW (3324.) IN STORAGE-OUTFLOW TABLE

WARNING --- ROUTED OUTFLOW (16714.) IS GREATER THAN MAXIMUM OUTFLOW (3324.) IN STORAGE-OUTFLOW TABLE

WARNING --- ROUTED OUTFLOW (15085.) IS GREATER THAN MAXIMUM OUTFLOW (3324.) IN STORAGE-OUTFLOW TABLE

WARNING --- ROUTED OUTFLOW (12682.) IS GREATER THAN MAXIMUM OUTFLOW (3324.) IN STORAGE-OUTFLOW TABLE

WARNING --- ROUTED OUTFLOW (10341.) IS GREATER THAN MAXIMUM OUTFLOW (3324.) IN STORAGE-OUTFLOW TABLE

WARNING --- ROUTED OUTFLOW (8293.) IS GREATER THAN MAXIMUM OUTFLOW (3324.) IN STORAGE-OUTFLOW TABLE

WARNING --- ROUTED OUTFLOW (6505.) IS GREATER THAN MAXIMUM OUTFLOW (3324.) IN STORAGE-OUTFLOW TABLE

WARNING --- ROUTED OUTFLOW (5144.) IS GREATER THAN MAXIMUM OUTFLOW (3324.) IN STORAGE-OUTFLOW TABLE

WARNING --- ROUTED OUTFLOW (4133.) IS GREATER THAN MAXIMUM OUTFLOW (3324.) IN STORAGE-OUTFLOW TABLE

WARNING --- ROUTED OUTFLOW (4981.) IS GREATER THAN MAXIMUM OUTFLOW (3324.) IN STORAGE-OUTFLOW TABLE

WARNING --- ROUTED OUTFLOW (8787.) IS GREATER THAN MAXIMUM OUTFLOW (3324.) IN STORAGE-OUTFLOW TABLE

WARNING --- ROUTED OUTFLOW (12678.) IS GREATER THAN MAXIMUM OUTFLOW (3324.) IN STORAGE-OUTFLOW TABLE

WARNING --- ROUTED OUTFLOW (15568.) IS GREATER THAN MAXIMUM OUTFLOW (3324.) IN STORAGE-OUTFLOW TABLE

WARNING --- ROUTED OUTFLOW (16688.) IS GREATER THAN MAXIMUM OUTFLOW (3324.) IN STORAGE-OUTFLOW TABLE

WARNING --- ROUTED OUTFLOW (15861.) IS GREATER THAN MAXIMUM OUTFLOW (3324.) IN STORAGE-OUTFLOW TABLE

WARNING --- ROUTED OUTFLOW (13787.) IS GREATER THAN MAXIMUM OUTFLOW (3324.) IN STORAGE-OUTFLOW TABLE

WARNING --- ROUTED OUTFLOW (11401.) IS GREATER THAN MAXIMUM OUTFLOW (3324.) IN STORAGE-OUTFLOW TABLE

WARNING --- ROUTED OUTFLOW (9215.) IS GREATER THAN MAXIMUM OUTFLOW (3324.) IN STORAGE-OUTFLOW TABLE

WARNING --- ROUTED OUTFLOW (7310.) IS GREATER THAN MAXIMUM OUTFLOW (3324.) IN STORAGE-OUTFLOW TABLE

WARNING --- ROUTED OUTFLOW (5752.) IS GREATER THAN MAXIMUM OUTFLOW (3324.) IN STORAGE-OUTFLOW TABLE

WARNING --- ROUTED OUTFLOW (4584.) IS GREATER THAN MAXIMUM OUTFLOW (3324.) IN STORAGE-OUTFLOW TABLE

WARNING --- ROUTED OUTFLOW (3662.) IS GREATER THAN MAXIMUM OUTFLOW (3324.) IN STORAGE-OUTFLOW TABLE 11

WARNING --- ROUTED OUTFLOW (15860.) IS GREATER THAN MAXIMUM OUTFLOW (10999.) IN STORAGE-OUTFLOW TABLE

WARNING --- ROUTED OUTFLOW (20256.) IS GREATER THAN MAXIMUM OUTFLOW (10999.) IN STORAGE-OUTFLOW TABLE

WARNING --- ROUTED OUTFLOW (22838.) IS GREATER THAN MAXIMUM OUTFLOW (10999.) IN STORAGE-OUTFLOW TABLE

WARNING --- ROUTED OUTFLOW (22817.) IS GREATER THAN MAXIMUM OUTFLOW (10999.) IN STORAGE-OUTFLOW TABLE

WARNING --- ROUTED OUTFLOW (20640.) IS GREATER THAN MAXIMUM OUTFLOW (10999.) IN STORAGE-OUTFLOW TABLE

WARNING --- ROUTED OUTFLOW (17498.) IS GREATER THAN MAXIMUM OUTFLOW (10999.) IN STORAGE-OUTFLOW TABLE

WARNING --- ROUTED OUTFLOW (14471.) IS GREATER THAN MAXIMUM OUTFLOW (10999.) IN STORAGE-OUTFLOW TABLE

WARNING --- ROUTED OUTFLOW (11680.) IS GREATER THAN MAXIMUM OUTFLOW (10999.) IN STORAGE-OUTFLOW TABLE

WARNING --- ROUTED OUTFLOW (13937.) IS GREATER THAN MAXIMUM OUTFLOW (10999.) IN STORAGE-OUTFLOW TABLE

WARNING --- ROUTED OUTFLOW (18637.) IS GREATER THAN MAXIMUM OUTFLOW (10999.) IN STORAGE-OUTFLOW TABLE

WARNING --- ROUTED OUTFLOW (21955.) IS GREATER THAN MAXIMUM OUTFLOW (10999.) IN STORAGE-OUTFLOW TABLE

WARNING --- ROUTED OUTFLOW (22950.) IS GREATER THAN MAXIMUM OUTFLOW (10999.) IN STORAGE-OUTFLOW TABLE

WARNING --- ROUTED OUTFLOW (21558.) IS GREATER THAN MAXIMUM OUTFLOW (10999.) IN STORAGE-OUTFLOW TABLE

WARNING --- ROUTED OUTFLOW (18720.) IS GREATER THAN MAXIMUM OUTFLOW (10999.) IN STORAGE-OUTFLOW TABLE

WARNING --- ROUTED OUTFLOW (15600.) IS GREATER THAN MAXIMUM OUTFLOW (10999.) IN STORAGE-OUTFLOW TABLE

WARNING --- ROUTED OUTFLOW (12721.) IS GREATER THAN MAXIMUM OUTFLOW (10999.) IN STORAGE-OUTFLOW TABLE

WARNING --- ROUTED OUTFLOW (10650.) IS GREATER THAN MAXIMUM OUTFLOW (6550.) IN STORAGE-OUTFLOW TABLE 12

WARNING --- ROUTED OUTFLOW (16607.) IS GREATER THAN MAXIMUM OUTFLOW (6550.) IN STORAGE-OUTFLOW TABLE

WARNING --- ROUTED OUTFLOW (22013.) IS GREATER THAN MAXIMUM OUTFLOW (6550.) IN STORAGE-OUTFLOW TABLE

WARNING --- ROUTED OUTFLOW (25642.) IS GREATER THAN MAXIMUM OUTFLOW (6550.) IN STORAGE-OUTFLOW TABLE

WARNING --- ROUTED OUTFLOW (26813.) IS GREATER THAN MAXIMUM OUTFLOW (6550.) IN STORAGE-OUTFLOW TABLE

WARNING --- ROUTED OUTFLOW (25601.) IS GREATER THAN MAXIMUM OUTFLOW (6550.) IN STORAGE-OUTFLOW TABLE

WARNING --- ROUTED OUTFLOW (22573.) IS GREATER THAN MAXIMUM OUTFLOW (6550.) IN STORAGE-OUTFLOW TABLE

WARNING --- ROUTED OUTFLOW (18887.) IS GREATER THAN MAXIMUM OUTFLOW (6550.) IN STORAGE-OUTFLOW TABLE

WARNING --- ROUTED OUTFLOW (15445.) IS GREATER THAN MAXIMUM OUTFLOW (6550.) IN STORAGE-OUTFLOW TABLE

WARNING --- ROUTED OUTFLOW (12412.) IS GREATER THAN MAXIMUM OUTFLOW (6550.) IN STORAGE-OUTFLOW TABLE

WARNING --- ROUTED OUTFLOW (9856.) IS GREATER THAN MAXIMUM OUTFLOW (6550.) IN STORAGE-OUTFLOW TABLE

WARNING --- ROUTED OUTFLOW (7845.) IS GREATER THAN MAXIMUM OUTFLOW (6550.) IN STORAGE-OUTFLOW TABLE 13

WARNING --- ROUTED OUTFLOW (21923.) IS GREATER THAN MAXIMUM OUTFLOW (15208.) IN STORAGE-OUTFLOW TABLE

WARNING --- ROUTED OUTFLOW (35282.) IS GREATER THAN MAXIMUM OUTFLOW (15208.) IN STORAGE-OUTFLOW TABLE

WARNING --- ROUTED OUTFLOW (45067.) IS GREATER THAN MAXIMUM OUTFLOW (15208.) IN STORAGE-OUTFLOW TABLE

WARNING --- ROUTED OUTFLOW (49748.) IS GREATER THAN MAXIMUM OUTFLOW (15208.) IN STORAGE-OUTFLOW TABLE

WARNING --- ROUTED OUTFLOW (50097.) IS GREATER THAN MAXIMUM OUTFLOW (15208.) IN STORAGE-OUTFLOW TABLE

WARNING --- ROUTED OUTFLOW (46994.) IS GREATER THAN MAXIMUM OUTFLOW (15208.) IN STORAGE-OUTFLOW TABLE

WARNING --- ROUTED OUTFLOW (41884.) IS GREATER THAN MAXIMUM OUTFLOW (15208.) IN STORAGE-OUTFLOW TABLE

WARNING --- ROUTED OUTFLOW (35979.) IS GREATER THAN MAXIMUM OUTFLOW (15208.) IN STORAGE-OUTFLOW TABLE

WARNING --- ROUTED OUTFLOW (30102.) IS GREATER THAN MAXIMUM OUTFLOW (15208.) IN STORAGE-OUTFLOW TABLE

WARNING --- ROUTED OUTFLOW (24759.) IS GREATER THAN MAXIMUM OUTFLOW (15208.) IN STORAGE-OUTFLOW TABLE

WARNING --- ROUTED OUTFLOW (20294.) IS GREATER THAN MAXIMUM OUTFLOW (15208.) IN STORAGE-OUTFLOW TABLE

WARNING --- ROUTED OUTFLOW (16725.) IS GREATER THAN MAXIMUM OUTFLOW (15208.) IN STORAGE-OUTFLOW TABLE

WARNING --- ROUTED OUTFLOW (17748.) IS GREATER THAN MAXIMUM OUTFLOW (15208.) IN STORAGE-OUTFLOW TABLE

WARNING --- ROUTED OUTFLOW (30774.) IS GREATER THAN MAXIMUM OUTFLOW (15208.) IN STORAGE-OUTFLOW TABLE

WARNING --- ROUTED OUTFLOW (42055.) IS GREATER THAN MAXIMUM OUTFLOW (15208.) IN STORAGE-OUTFLOW TABLE

WARNING --- ROUTED OUTFLOW (48478.) IS GREATER THAN MAXIMUM OUTFLOW (15208.) IN STORAGE-OUTFLOW TABLE

WARNING --- ROUTED OUTFLOW (50211.) IS GREATER THAN MAXIMUM OUTFLOW (15208.) IN STORAGE-OUTFLOW TABLE

WARNING --- ROUTED OUTFLOW (48212.) IS GREATER THAN MAXIMUM OUTFLOW (15208.) IN STORAGE-OUTFLOW TABLE

WARNING --- ROUTED OUTFLOW (43684.) IS GREATER THAN MAXIMUM OUTFLOW (15208.) IN STORAGE-OUTFLOW TABLE

WARNING --- ROUTED OUTFLOW (37981.) IS GREATER THAN MAXIMUM OUTFLOW (15208.) IN STORAGE-OUTFLOW TABLE

WARNING --- ROUTED OUTFLOW (32052.) IS GREATER THAN MAXIMUM OUTFLOW (15208.) IN STORAGE-OUTFLOW TABLE

WARNING --- ROUTED OUTFLOW (26506.) IS GREATER THAN MAXIMUM OUTFLOW (15208.) IN STORAGE-OUTFLOW TABLE

WARNING --- ROUTED OUTFLOW (21731.) IS GREATER THAN MAXIMUM OUTFLOW (15208.) IN STORAGE-OUTFLOW TABLE

WARNING --- ROUTED OUTFLOW (17865.) IS GREATER THAN MAXIMUM OUTFLOW (15208.) IN STORAGE-OUTFLOW TABLE 14

WARNING --- ROUTED OUTFLOW (16901.) IS GREATER THAN MAXIMUM OUTFLOW (13500.) IN STORAGE-OUTFLOW TABLE

WARNING --- ROUTED OUTFLOW (33234.) IS GREATER THAN MAXIMUM OUTFLOW (13500.) IN STORAGE-OUTFLOW TABLE

WARNING --- ROUTED OUTFLOW (46717.) IS GREATER THAN MAXIMUM OUTFLOW (13500.) IN STORAGE-OUTFLOW TABLE

WARNING --- ROUTED OUTFLOW (55701.) IS GREATER THAN MAXIMUM OUTFLOW (13500.) IN STORAGE-OUTFLOW TABLE

WARNING --- ROUTED OUTFLOW (58815.) IS GREATER THAN MAXIMUM OUTFLOW (13500.) IN STORAGE-OUTFLOW TABLE

WARNING --- ROUTED OUTFLOW (57344.) IS GREATER THAN MAXIMUM OUTFLOW (13500.) IN STORAGE-OUTFLOW TABLE

WARNING --- ROUTED OUTFLOW (52876.) IS GREATER THAN MAXIMUM OUTFLOW (13500.) IN STORAGE-OUTFLOW TABLE

WARNING --- ROUTED OUTFLOW (46614.) IS GREATER THAN MAXIMUM OUTFLOW (13500.) IN STORAGE-OUTFLOW TABLE

WARNING --- ROUTED OUTFLOW (39679.) IS GREATER THAN MAXIMUM OUTFLOW (13500.) IN STORAGE-OUTFLOW TABLE

WARNING --- ROUTED OUTFLOW (33011.) IS GREATER THAN MAXIMUM OUTFLOW (13500.) IN STORAGE-OUTFLOW TABLE

WARNING --- ROUTED OUTFLOW (27175.) IS GREATER THAN MAXIMUM OUTFLOW (13500.) IN STORAGE-OUTFLOW TABLE

WARNING --- ROUTED OUTFLOW (22404.) IS GREATER THAN MAXIMUM OUTFLOW (13500.) IN STORAGE-OUTFLOW TABLE

WARNING --- ROUTED OUTFLOW (18536.) IS GREATER THAN MAXIMUM OUTFLOW (13500.) IN STORAGE-OUTFLOW TABLE

WARNING --- ROUTED OUTFLOW (15367.) IS GREATER THAN MAXIMUM OUTFLOW (13500.) IN STORAGE-OUTFLOW TABLE 15

WARNING --- ROUTED OUTFLOW (32634.) IS GREATER THAN MAXIMUM OUTFLOW (28617.) IN STORAGE-OUTFLOW TABLE

WARNING --- ROUTED OUTFLOW (45051.) IS GREATER THAN MAXIMUM OUTFLOW (28617.) IN STORAGE-OUTFLOW TABLE

WARNING --- ROUTED OUTFLOW (55466.) IS GREATER THAN MAXIMUM OUTFLOW (28617.) IN STORAGE-OUTFLOW TABLE

WARNING --- ROUTED OUTFLOW (58496.) IS GREATER THAN MAXIMUM OUTFLOW (28617.) IN STORAGE-OUTFLOW TABLE

WARNING --- ROUTED OUTFLOW (57792.) IS GREATER THAN MAXIMUM OUTFLOW (28617.) IN STORAGE-OUTFLOW TABLE

WARNING --- ROUTED OUTFLOW (53257.) IS GREATER THAN MAXIMUM OUTFLOW (28617.) IN STORAGE-OUTFLOW TABLE

WARNING --- ROUTED OUTFLOW (47318.) IS GREATER THAN MAXIMUM OUTFLOW (28617.) IN STORAGE-OUTFLOW TABLE

WARNING --- ROUTED OUTFLOW (40263.) IS GREATER THAN MAXIMUM OUTFLOW (28617.) IN STORAGE-OUTFLOW TABLE

WARNING --- ROUTED OUTFLOW (33637.) IS GREATER THAN MAXIMUM OUTFLOW (28617.) IN STORAGE-OUTFLOW TABLE

WARNING --- ROUTED OUTFLOW (2358.) IS GREATER THAN MAXIMUM OUTFLOW (2348.) IN STORAGE-OUTFLOW TABLE 16

WARNING --- ROUTED OUTFLOW (2633.) IS GREATER THAN MAXIMUM OUTFLOW (1836.) IN STORAGE-OUTFLOW TABLE 17

WARNING --- ROUTED OUTFLOW (2642.) IS GREATER THAN MAXIMUM OUTFLOW (1836.) IN STORAGE-OUTFLOW TABLE

```
WARNING --- ROUTED OUTFLOW (  2268.) IS GREATER THAN MAXIMUM OUTFLOW (  1836.) IN STORAGE-OUTFLOW TABLE
WARNING --- ROUTED OUTFLOW (  2475.) IS GREATER THAN MAXIMUM OUTFLOW (  1219.) IN STORAGE-OUTFLOW TABLE
WARNING --- ROUTED OUTFLOW (  4280.) IS GREATER THAN MAXIMUM OUTFLOW (  1219.) IN STORAGE-OUTFLOW TABLE
WARNING --- ROUTED OUTFLOW (  5480.) IS GREATER THAN MAXIMUM OUTFLOW (  1219.) IN STORAGE-OUTFLOW TABLE
WARNING --- ROUTED OUTFLOW (  5597.) IS GREATER THAN MAXIMUM OUTFLOW (  1219.) IN STORAGE-OUTFLOW TABLE
WARNING --- ROUTED OUTFLOW (  5117.) IS GREATER THAN MAXIMUM OUTFLOW (  1219.) IN STORAGE-OUTFLOW TABLE
WARNING --- ROUTED OUTFLOW (  4390.) IS GREATER THAN MAXIMUM OUTFLOW (  1219.) IN STORAGE-OUTFLOW TABLE
WARNING --- ROUTED OUTFLOW (  3704.) IS GREATER THAN MAXIMUM OUTFLOW (  1219.) IN STORAGE-OUTFLOW TABLE
WARNING --- ROUTED OUTFLOW (  3054.) IS GREATER THAN MAXIMUM OUTFLOW (  1219.) IN STORAGE-OUTFLOW TABLE
WARNING --- ROUTED OUTFLOW (  2476.) IS GREATER THAN MAXIMUM OUTFLOW (  1219.) IN STORAGE-OUTFLOW TABLE
WARNING --- ROUTED OUTFLOW (  2035.) IS GREATER THAN MAXIMUM OUTFLOW (  1219.) IN STORAGE-OUTFLOW TABLE
WARNING --- ROUTED OUTFLOW (  1722.) IS GREATER THAN MAXIMUM OUTFLOW (  1219.) IN STORAGE-OUTFLOW TABLE
WARNING --- ROUTED OUTFLOW (  1481.) IS GREATER THAN MAXIMUM OUTFLOW (  1219.) IN STORAGE-OUTFLOW TABLE
WARNING --- ROUTED OUTFLOW (  1257.) IS GREATER THAN MAXIMUM OUTFLOW (  1219.) IN STORAGE-OUTFLOW TABLE
WARNING --- ROUTED OUTFLOW (  1691.) IS GREATER THAN MAXIMUM OUTFLOW (  1057.) IN STORAGE-OUTFLOW TABLE
WARNING --- ROUTED OUTFLOW (  2945.) IS GREATER THAN MAXIMUM OUTFLOW (  1057.) IN STORAGE-OUTFLOW TABLE
WARNING --- ROUTED OUTFLOW (  4055.) IS GREATER THAN MAXIMUM OUTFLOW (  1057.) IN STORAGE-OUTFLOW TABLE
WARNING --- ROUTED OUTFLOW (  4688.) IS GREATER THAN MAXIMUM OUTFLOW (  1057.) IN STORAGE-OUTFLOW TABLE
WARNING --- ROUTED OUTFLOW (  4807.) IS GREATER THAN MAXIMUM OUTFLOW (  1057.) IN STORAGE-OUTFLOW TABLE
WARNING --- ROUTED OUTFLOW (  4567.) IS GREATER THAN MAXIMUM OUTFLOW (  1057.) IN STORAGE-OUTFLOW TABLE
WARNING --- ROUTED OUTFLOW (  4128.) IS GREATER THAN MAXIMUM OUTFLOW (  1057.) IN STORAGE-OUTFLOW TABLE
WARNING --- ROUTED OUTFLOW (  3599.) IS GREATER THAN MAXIMUM OUTFLOW (  1057.) IN STORAGE-OUTFLOW TABLE
WARNING --- ROUTED OUTFLOW (  3056.) IS GREATER THAN MAXIMUM OUTFLOW (  1057.) IN STORAGE-OUTFLOW TABLE
WARNING --- ROUTED OUTFLOW (  2564.) IS GREATER THAN MAXIMUM OUTFLOW (  1057.) IN STORAGE-OUTFLOW TABLE
WARNING --- ROUTED OUTFLOW (  2156.) IS GREATER THAN MAXIMUM OUTFLOW (  1057.) IN STORAGE-OUTFLOW TABLE
WARNING --- ROUTED OUTFLOW (  1824.) IS GREATER THAN MAXIMUM OUTFLOW (  1057.) IN STORAGE-OUTFLOW TABLE
WARNING --- ROUTED OUTFLOW (  1541.) IS GREATER THAN MAXIMUM OUTFLOW (  1057.) IN STORAGE-OUTFLOW TABLE
WARNING --- ROUTED OUTFLOW (  1293.) IS GREATER THAN MAXIMUM OUTFLOW (  1057.) IN STORAGE-OUTFLOW TABLE
WARNING --- ROUTED OUTFLOW (  1077.) IS GREATER THAN MAXIMUM OUTFLOW (  1057.) IN STORAGE-OUTFLOW TABLE
WARNING --- ROUTED OUTFLOW (   830.) IS GREATER THAN MAXIMUM OUTFLOW (   222.) IN STORAGE-OUTFLOW TABLE
WARNING --- ROUTED OUTFLOW (  1829.) IS GREATER THAN MAXIMUM OUTFLOW (   222.) IN STORAGE-OUTFLOW TABLE
WARNING --- ROUTED OUTFLOW (  2798.) IS GREATER THAN MAXIMUM OUTFLOW (   222.) IN STORAGE-OUTFLOW TABLE
WARNING --- ROUTED OUTFLOW (  3493.) IS GREATER THAN MAXIMUM OUTFLOW (   222.) IN STORAGE-OUTFLOW TABLE
WARNING --- ROUTED OUTFLOW (  3814.) IS GREATER THAN MAXIMUM OUTFLOW (   222.) IN STORAGE-OUTFLOW TABLE
WARNING --- ROUTED OUTFLOW (  3806.) IS GREATER THAN MAXIMUM OUTFLOW (   222.) IN STORAGE-OUTFLOW TABLE
WARNING --- ROUTED OUTFLOW (  3566.) IS GREATER THAN MAXIMUM OUTFLOW (   222.) IN STORAGE-OUTFLOW TABLE
```

18

19

20

WARNING --- ROUTED OUTFLOW (3188.) IS GREATER THAN MAXIMUM OUTFLOW (222.) IN STORAGE-OUTFLOW TABLE
WARNING --- ROUTED OUTFLOW (2752.) IS GREATER THAN MAXIMUM OUTFLOW (222.) IN STORAGE-OUTFLOW TABLE
WARNING --- ROUTED OUTFLOW (2319.) IS GREATER THAN MAXIMUM OUTFLOW (222.) IN STORAGE-OUTFLOW TABLE
WARNING --- ROUTED OUTFLOW (1927.) IS GREATER THAN MAXIMUM OUTFLOW (222.) IN STORAGE-OUTFLOW TABLE
WARNING --- ROUTED OUTFLOW (1587.) IS GREATER THAN MAXIMUM OUTFLOW (222.) IN STORAGE-OUTFLOW TABLE
WARNING --- ROUTED OUTFLOW (1294.) IS GREATER THAN MAXIMUM OUTFLOW (222.) IN STORAGE-OUTFLOW TABLE
WARNING --- ROUTED OUTFLOW (1042.) IS GREATER THAN MAXIMUM OUTFLOW (222.) IN STORAGE-OUTFLOW TABLE
WARNING --- ROUTED OUTFLOW (823.) IS GREATER THAN MAXIMUM OUTFLOW (222.) IN STORAGE-OUTFLOW TABLE
WARNING --- ROUTED OUTFLOW (637.) IS GREATER THAN MAXIMUM OUTFLOW (222.) IN STORAGE-OUTFLOW TABLE
WARNING --- ROUTED OUTFLOW (482.) IS GREATER THAN MAXIMUM OUTFLOW (222.) IN STORAGE-OUTFLOW TABLE
WARNING --- ROUTED OUTFLOW (354.) IS GREATER THAN MAXIMUM OUTFLOW (222.) IN STORAGE-OUTFLOW TABLE
WARNING --- ROUTED OUTFLOW (252.) IS GREATER THAN MAXIMUM OUTFLOW (222.) IN STORAGE-OUTFLOW TABLE 21
WARNING --- ROUTED OUTFLOW (3473.) IS GREATER THAN MAXIMUM OUTFLOW (3318.) IN STORAGE-OUTFLOW TABLE
WARNING --- ROUTED OUTFLOW (3644.) IS GREATER THAN MAXIMUM OUTFLOW (3318.) IN STORAGE-OUTFLOW TABLE
WARNING --- ROUTED OUTFLOW (3537.) IS GREATER THAN MAXIMUM OUTFLOW (3318.) IN STORAGE-OUTFLOW TABLE 22
WARNING --- ROUTED OUTFLOW (1201.) IS GREATER THAN MAXIMUM OUTFLOW (951.) IN STORAGE-OUTFLOW TABLE
WARNING --- ROUTED OUTFLOW (1785.) IS GREATER THAN MAXIMUM OUTFLOW (951.) IN STORAGE-OUTFLOW TABLE
WARNING --- ROUTED OUTFLOW (2305.) IS GREATER THAN MAXIMUM OUTFLOW (951.) IN STORAGE-OUTFLOW TABLE
WARNING --- ROUTED OUTFLOW (2684.) IS GREATER THAN MAXIMUM OUTFLOW (951.) IN STORAGE-OUTFLOW TABLE
WARNING --- ROUTED OUTFLOW (2894.) IS GREATER THAN MAXIMUM OUTFLOW (951.) IN STORAGE-OUTFLOW TABLE
WARNING --- ROUTED OUTFLOW (2947.) IS GREATER THAN MAXIMUM OUTFLOW (951.) IN STORAGE-OUTFLOW TABLE
WARNING --- ROUTED OUTFLOW (2873.) IS GREATER THAN MAXIMUM OUTFLOW (951.) IN STORAGE-OUTFLOW TABLE
WARNING --- ROUTED OUTFLOW (2709.) IS GREATER THAN MAXIMUM OUTFLOW (951.) IN STORAGE-OUTFLOW TABLE
WARNING --- ROUTED OUTFLOW (2486.) IS GREATER THAN MAXIMUM OUTFLOW (951.) IN STORAGE-OUTFLOW TABLE
WARNING --- ROUTED OUTFLOW (2230.) IS GREATER THAN MAXIMUM OUTFLOW (951.) IN STORAGE-OUTFLOW TABLE
WARNING --- ROUTED OUTFLOW (1965.) IS GREATER THAN MAXIMUM OUTFLOW (951.) IN STORAGE-OUTFLOW TABLE
WARNING --- ROUTED OUTFLOW (1706.) IS GREATER THAN MAXIMUM OUTFLOW (951.) IN STORAGE-OUTFLOW TABLE
WARNING --- ROUTED OUTFLOW (1459.) IS GREATER THAN MAXIMUM OUTFLOW (951.) IN STORAGE-OUTFLOW TABLE
WARNING --- ROUTED OUTFLOW (1232.) IS GREATER THAN MAXIMUM OUTFLOW (951.) IN STORAGE-OUTFLOW TABLE
WARNING --- ROUTED OUTFLOW (1025.) IS GREATER THAN MAXIMUM OUTFLOW (951.) IN STORAGE-OUTFLOW TABLE 23
WARNING --- ROUTED OUTFLOW (1329.) IS GREATER THAN MAXIMUM OUTFLOW (906.) IN STORAGE-OUTFLOW TABLE
WARNING --- ROUTED OUTFLOW (1797.) IS GREATER THAN MAXIMUM OUTFLOW (906.) IN STORAGE-OUTFLOW TABLE
WARNING --- ROUTED OUTFLOW (2185.) IS GREATER THAN MAXIMUM OUTFLOW (906.) IN STORAGE-OUTFLOW TABLE
WARNING --- ROUTED OUTFLOW (2456.) IS GREATER THAN MAXIMUM OUTFLOW (906.) IN STORAGE-OUTFLOW TABLE
WARNING --- ROUTED OUTFLOW (2598.) IS GREATER THAN MAXIMUM OUTFLOW (906.) IN STORAGE-OUTFLOW TABLE
WARNING --- ROUTED OUTFLOW (2619.) IS GREATER THAN MAXIMUM OUTFLOW (906.) IN STORAGE-OUTFLOW TABLE

```
WARNING --- ROUTED OUTFLOW (  2541.) IS GREATER THAN MAXIMUM OUTFLOW (   906.) IN STORAGE-OUTFLOW TABLE
WARNING --- ROUTED OUTFLOW (  2389.) IS GREATER THAN MAXIMUM OUTFLOW (   906.) IN STORAGE-OUTFLOW TABLE
WARNING --- ROUTED OUTFLOW (  2188.) IS GREATER THAN MAXIMUM OUTFLOW (   906.) IN STORAGE-OUTFLOW TABLE
WARNING --- ROUTED OUTFLOW (  1961.) IS GREATER THAN MAXIMUM OUTFLOW (   906.) IN STORAGE-OUTFLOW TABLE
WARNING --- ROUTED OUTFLOW (  1725.) IS GREATER THAN MAXIMUM OUTFLOW (   906.) IN STORAGE-OUTFLOW TABLE
WARNING --- ROUTED OUTFLOW (  1491.) IS GREATER THAN MAXIMUM OUTFLOW (   906.) IN STORAGE-OUTFLOW TABLE
WARNING --- ROUTED OUTFLOW (  1267.) IS GREATER THAN MAXIMUM OUTFLOW (   906.) IN STORAGE-OUTFLOW TABLE
WARNING --- ROUTED OUTFLOW (  1056.) IS GREATER THAN MAXIMUM OUTFLOW (   906.) IN STORAGE-OUTFLOW TABLE
WARNING --- ROUTED OUTFLOW (   398.) IS GREATER THAN MAXIMUM OUTFLOW (   276.) IN STORAGE-OUTFLOW TABLE
WARNING --- ROUTED OUTFLOW (   735.) IS GREATER THAN MAXIMUM OUTFLOW (   276.) IN STORAGE-OUTFLOW TABLE
WARNING --- ROUTED OUTFLOW (  1148.) IS GREATER THAN MAXIMUM OUTFLOW (   276.) IN STORAGE-OUTFLOW TABLE
WARNING --- ROUTED OUTFLOW (  1568.) IS GREATER THAN MAXIMUM OUTFLOW (   276.) IN STORAGE-OUTFLOW TABLE
WARNING --- ROUTED OUTFLOW (  1937.) IS GREATER THAN MAXIMUM OUTFLOW (   276.) IN STORAGE-OUTFLOW TABLE
WARNING --- ROUTED OUTFLOW (  2214.) IS GREATER THAN MAXIMUM OUTFLOW (   276.) IN STORAGE-OUTFLOW TABLE
WARNING --- ROUTED OUTFLOW (  2380.) IS GREATER THAN MAXIMUM OUTFLOW (   276.) IN STORAGE-OUTFLOW TABLE
WARNING --- ROUTED OUTFLOW (  2435.) IS GREATER THAN MAXIMUM OUTFLOW (   276.) IN STORAGE-OUTFLOW TABLE
WARNING --- ROUTED OUTFLOW (  2394.) IS GREATER THAN MAXIMUM OUTFLOW (   276.) IN STORAGE-OUTFLOW TABLE
WARNING --- ROUTED OUTFLOW (  2277.) IS GREATER THAN MAXIMUM OUTFLOW (   276.) IN STORAGE-OUTFLOW TABLE
WARNING --- ROUTED OUTFLOW (  2107.) IS GREATER THAN MAXIMUM OUTFLOW (   276.) IN STORAGE-OUTFLOW TABLE
WARNING --- ROUTED OUTFLOW (  1904.) IS GREATER THAN MAXIMUM OUTFLOW (   276.) IN STORAGE-OUTFLOW TABLE
WARNING --- ROUTED OUTFLOW (  1684.) IS GREATER THAN MAXIMUM OUTFLOW (   276.) IN STORAGE-OUTFLOW TABLE
WARNING --- ROUTED OUTFLOW (  1462.) IS GREATER THAN MAXIMUM OUTFLOW (   276.) IN STORAGE-OUTFLOW TABLE
WARNING --- ROUTED OUTFLOW (  1243.) IS GREATER THAN MAXIMUM OUTFLOW (   276.) IN STORAGE-OUTFLOW TABLE
WARNING --- ROUTED OUTFLOW (  1033.) IS GREATER THAN MAXIMUM OUTFLOW (   276.) IN STORAGE-OUTFLOW TABLE
WARNING --- ROUTED OUTFLOW (   838.) IS GREATER THAN MAXIMUM OUTFLOW (   276.) IN STORAGE-OUTFLOW TABLE
WARNING --- ROUTED OUTFLOW (   664.) IS GREATER THAN MAXIMUM OUTFLOW (   276.) IN STORAGE-OUTFLOW TABLE
WARNING --- ROUTED OUTFLOW (   512.) IS GREATER THAN MAXIMUM OUTFLOW (   276.) IN STORAGE-OUTFLOW TABLE
WARNING --- ROUTED OUTFLOW (   384.) IS GREATER THAN MAXIMUM OUTFLOW (   276.) IN STORAGE-OUTFLOW TABLE
WARNING --- ROUTED OUTFLOW (   282.) IS GREATER THAN MAXIMUM OUTFLOW (   276.) IN STORAGE-OUTFLOW TABLE
WARNING --- ROUTED OUTFLOW (   940.) IS GREATER THAN MAXIMUM OUTFLOW (   892.) IN STORAGE-OUTFLOW TABLE
WARNING --- ROUTED OUTFLOW (  1774.) IS GREATER THAN MAXIMUM OUTFLOW (   892.) IN STORAGE-OUTFLOW TABLE
WARNING --- ROUTED OUTFLOW (  2280.) IS GREATER THAN MAXIMUM OUTFLOW (   892.) IN STORAGE-OUTFLOW TABLE
WARNING --- ROUTED OUTFLOW (  2283.) IS GREATER THAN MAXIMUM OUTFLOW (   892.) IN STORAGE-OUTFLOW TABLE
WARNING --- ROUTED OUTFLOW (  2177.) IS GREATER THAN MAXIMUM OUTFLOW (   892.) IN STORAGE-OUTFLOW TABLE
WARNING --- ROUTED OUTFLOW (  2038.) IS GREATER THAN MAXIMUM OUTFLOW (   892.) IN STORAGE-OUTFLOW TABLE
WARNING --- ROUTED OUTFLOW (  1843.) IS GREATER THAN MAXIMUM OUTFLOW (   892.) IN STORAGE-OUTFLOW TABLE
```

WARNING --- ROUTED OUTFLOW (1638.) IS GREATER THAN MAXIMUM OUTFLOW (892.) IN STORAGE-OUTFLOW TABLE

WARNING --- ROUTED OUTFLOW (1433.) IS GREATER THAN MAXIMUM OUTFLOW (892.) IN STORAGE-OUTFLOW TABLE

WARNING --- ROUTED OUTFLOW (1276.) IS GREATER THAN MAXIMUM OUTFLOW (892.) IN STORAGE-OUTFLOW TABLE

WARNING --- ROUTED OUTFLOW (1124.) IS GREATER THAN MAXIMUM OUTFLOW (892.) IN STORAGE-OUTFLOW TABLE

WARNING --- ROUTED OUTFLOW (956.) IS GREATER THAN MAXIMUM OUTFLOW (892.) IN STORAGE-OUTFLOW TABLE 26

WARNING --- ROUTED OUTFLOW (664.) IS GREATER THAN MAXIMUM OUTFLOW (186.) IN STORAGE-OUTFLOW TABLE

WARNING --- ROUTED OUTFLOW (1315.) IS GREATER THAN MAXIMUM OUTFLOW (186.) IN STORAGE-OUTFLOW TABLE

WARNING --- ROUTED OUTFLOW (1787.) IS GREATER THAN MAXIMUM OUTFLOW (186.) IN STORAGE-OUTFLOW TABLE

WARNING --- ROUTED OUTFLOW (2000.) IS GREATER THAN MAXIMUM OUTFLOW (186.) IN STORAGE-OUTFLOW TABLE

WARNING --- ROUTED OUTFLOW (2041.) IS GREATER THAN MAXIMUM OUTFLOW (186.) IN STORAGE-OUTFLOW TABLE

WARNING --- ROUTED OUTFLOW (1980.) IS GREATER THAN MAXIMUM OUTFLOW (186.) IN STORAGE-OUTFLOW TABLE

WARNING --- ROUTED OUTFLOW (1847.) IS GREATER THAN MAXIMUM OUTFLOW (186.) IN STORAGE-OUTFLOW TABLE

WARNING --- ROUTED OUTFLOW (1678.) IS GREATER THAN MAXIMUM OUTFLOW (186.) IN STORAGE-OUTFLOW TABLE

WARNING --- ROUTED OUTFLOW (1502.) IS GREATER THAN MAXIMUM OUTFLOW (186.) IN STORAGE-OUTFLOW TABLE

WARNING --- ROUTED OUTFLOW (1336.) IS GREATER THAN MAXIMUM OUTFLOW (186.) IN STORAGE-OUTFLOW TABLE

WARNING --- ROUTED OUTFLOW (1174.) IS GREATER THAN MAXIMUM OUTFLOW (186.) IN STORAGE-OUTFLOW TABLE

WARNING --- ROUTED OUTFLOW (1011.) IS GREATER THAN MAXIMUM OUTFLOW (186.) IN STORAGE-OUTFLOW TABLE

WARNING --- ROUTED OUTFLOW (850.) IS GREATER THAN MAXIMUM OUTFLOW (186.) IN STORAGE-OUTFLOW TABLE

WARNING --- ROUTED OUTFLOW (699.) IS GREATER THAN MAXIMUM OUTFLOW (186.) IN STORAGE-OUTFLOW TABLE

WARNING --- ROUTED OUTFLOW (560.) IS GREATER THAN MAXIMUM OUTFLOW (186.) IN STORAGE-OUTFLOW TABLE

WARNING --- ROUTED OUTFLOW (435.) IS GREATER THAN MAXIMUM OUTFLOW (186.) IN STORAGE-OUTFLOW TABLE

WARNING --- ROUTED OUTFLOW (332.) IS GREATER THAN MAXIMUM OUTFLOW (186.) IN STORAGE-OUTFLOW TABLE

WARNING --- ROUTED OUTFLOW (254.) IS GREATER THAN MAXIMUM OUTFLOW (186.) IN STORAGE-OUTFLOW TABLE

WARNING --- ROUTED OUTFLOW (196.) IS GREATER THAN MAXIMUM OUTFLOW (186.) IN STORAGE-OUTFLOW TABLE

WARNING --- ROUTED OUTFLOW (5960.) IS GREATER THAN MAXIMUM OUTFLOW (5172.) IN STORAGE-OUTFLOW TABLE 27

WARNING --- ROUTED OUTFLOW (8624.) IS GREATER THAN MAXIMUM OUTFLOW (5172.) IN STORAGE-OUTFLOW TABLE

WARNING --- ROUTED OUTFLOW (11995.) IS GREATER THAN MAXIMUM OUTFLOW (5172.) IN STORAGE-OUTFLOW TABLE

WARNING --- ROUTED OUTFLOW (15638.) IS GREATER THAN MAXIMUM OUTFLOW (5172.) IN STORAGE-OUTFLOW TABLE

WARNING --- ROUTED OUTFLOW (19080.) IS GREATER THAN MAXIMUM OUTFLOW (5172.) IN STORAGE-OUTFLOW TABLE

WARNING --- ROUTED OUTFLOW (22031.) IS GREATER THAN MAXIMUM OUTFLOW (5172.) IN STORAGE-OUTFLOW TABLE

WARNING --- ROUTED OUTFLOW (24319.) IS GREATER THAN MAXIMUM OUTFLOW (5172.) IN STORAGE-OUTFLOW TABLE

WARNING --- ROUTED OUTFLOW (25895.) IS GREATER THAN MAXIMUM OUTFLOW (5172.) IN STORAGE-OUTFLOW TABLE

WARNING --- ROUTED OUTFLOW (26791.) IS GREATER THAN MAXIMUM OUTFLOW (5172.) IN STORAGE-OUTFLOW TABLE

WARNING --- ROUTED OUTFLOW (27103.) IS GREATER THAN MAXIMUM OUTFLOW (5172.) IN STORAGE-OUTFLOW TABLE

WARNING --- ROUTED OUTFLOW (26953.) IS GREATER THAN MAXIMUM OUTFLOW (5172.) IN STORAGE-OUTFLOW TABLE

WARNING --- ROUTED OUTFLOW (26477.) IS GREATER THAN MAXIMUM OUTFLOW (5172.) IN STORAGE-OUTFLOW TABLE

```
WARNING --- ROUTED OUTFLOW ( 25793.) IS GREATER THAN MAXIMUM OUTFLOW (  5172.) IN STORAGE-OUTFLOW TABLE
WARNING --- ROUTED OUTFLOW ( 24981.) IS GREATER THAN MAXIMUM OUTFLOW (  5172.) IN STORAGE-OUTFLOW TABLE
WARNING --- ROUTED OUTFLOW ( 24086.) IS GREATER THAN MAXIMUM OUTFLOW (  5172.) IN STORAGE-OUTFLOW TABLE
WARNING --- ROUTED OUTFLOW ( 23144.) IS GREATER THAN MAXIMUM OUTFLOW (  5172.) IN STORAGE-OUTFLOW TABLE
WARNING --- ROUTED OUTFLOW ( 22195.) IS GREATER THAN MAXIMUM OUTFLOW (  5172.) IN STORAGE-OUTFLOW TABLE
WARNING --- ROUTED OUTFLOW ( 21276.) IS GREATER THAN MAXIMUM OUTFLOW (  5172.) IN STORAGE-OUTFLOW TABLE
WARNING --- ROUTED OUTFLOW ( 20410.) IS GREATER THAN MAXIMUM OUTFLOW (  5172.) IN STORAGE-OUTFLOW TABLE
WARNING --- ROUTED OUTFLOW ( 19610.) IS GREATER THAN MAXIMUM OUTFLOW (  5172.) IN STORAGE-OUTFLOW TABLE
WARNING --- ROUTED OUTFLOW ( 18873.) IS GREATER THAN MAXIMUM OUTFLOW (  5172.) IN STORAGE-OUTFLOW TABLE
WARNING --- ROUTED OUTFLOW ( 18190.) IS GREATER THAN MAXIMUM OUTFLOW (  5172.) IN STORAGE-OUTFLOW TABLE
WARNING --- ROUTED OUTFLOW ( 17537.) IS GREATER THAN MAXIMUM OUTFLOW (  5172.) IN STORAGE-OUTFLOW TABLE
WARNING --- ROUTED OUTFLOW ( 16894.) IS GREATER THAN MAXIMUM OUTFLOW (  5172.) IN STORAGE-OUTFLOW TABLE
WARNING --- ROUTED OUTFLOW ( 16243.) IS GREATER THAN MAXIMUM OUTFLOW (  5172.) IN STORAGE-OUTFLOW TABLE
WARNING --- ROUTED OUTFLOW ( 15576.) IS GREATER THAN MAXIMUM OUTFLOW (  5172.) IN STORAGE-OUTFLOW TABLE
WARNING --- ROUTED OUTFLOW ( 14890.) IS GREATER THAN MAXIMUM OUTFLOW (  5172.) IN STORAGE-OUTFLOW TABLE
WARNING --- ROUTED OUTFLOW ( 14186.) IS GREATER THAN MAXIMUM OUTFLOW (  5172.) IN STORAGE-OUTFLOW TABLE
WARNING --- ROUTED OUTFLOW ( 13470.) IS GREATER THAN MAXIMUM OUTFLOW (  5172.) IN STORAGE-OUTFLOW TABLE
WARNING --- ROUTED OUTFLOW ( 12758.) IS GREATER THAN MAXIMUM OUTFLOW (  5172.) IN STORAGE-OUTFLOW TABLE
WARNING --- ROUTED OUTFLOW ( 12063.) IS GREATER THAN MAXIMUM OUTFLOW (  5172.) IN STORAGE-OUTFLOW TABLE
WARNING --- ROUTED OUTFLOW ( 11382.) IS GREATER THAN MAXIMUM OUTFLOW (  5172.) IN STORAGE-OUTFLOW TABLE
WARNING --- ROUTED OUTFLOW ( 10715.) IS GREATER THAN MAXIMUM OUTFLOW (  5172.) IN STORAGE-OUTFLOW TABLE
WARNING --- ROUTED OUTFLOW ( 10068.) IS GREATER THAN MAXIMUM OUTFLOW (  5172.) IN STORAGE-OUTFLOW TABLE
WARNING --- ROUTED OUTFLOW (  9444.) IS GREATER THAN MAXIMUM OUTFLOW (  5172.) IN STORAGE-OUTFLOW TABLE
WARNING --- ROUTED OUTFLOW (  8850.) IS GREATER THAN MAXIMUM OUTFLOW (  5172.) IN STORAGE-OUTFLOW TABLE
WARNING --- ROUTED OUTFLOW (  8289.) IS GREATER THAN MAXIMUM OUTFLOW (  5172.) IN STORAGE-OUTFLOW TABLE
WARNING --- ROUTED OUTFLOW (  7761.) IS GREATER THAN MAXIMUM OUTFLOW (  5172.) IN STORAGE-OUTFLOW TABLE
WARNING --- ROUTED OUTFLOW (  7264.) IS GREATER THAN MAXIMUM OUTFLOW (  5172.) IN STORAGE-OUTFLOW TABLE
WARNING --- ROUTED OUTFLOW (  6797.) IS GREATER THAN MAXIMUM OUTFLOW (  5172.) IN STORAGE-OUTFLOW TABLE
WARNING --- ROUTED OUTFLOW (  6357.) IS GREATER THAN MAXIMUM OUTFLOW (  5172.) IN STORAGE-OUTFLOW TABLE
WARNING --- ROUTED OUTFLOW (  5944.) IS GREATER THAN MAXIMUM OUTFLOW (  5172.) IN STORAGE-OUTFLOW TABLE
WARNING --- ROUTED OUTFLOW (  5557.) IS GREATER THAN MAXIMUM OUTFLOW (  5172.) IN STORAGE-OUTFLOW TABLE
WARNING --- ROUTED OUTFLOW (  5194.) IS GREATER THAN MAXIMUM OUTFLOW (  5172.) IN STORAGE-OUTFLOW TABLE
WARNING --- ROUTED OUTFLOW (  2594.) IS GREATER THAN MAXIMUM OUTFLOW (  2310.) IN STORAGE-OUTFLOW TABLE
WARNING --- ROUTED OUTFLOW (  2764.) IS GREATER THAN MAXIMUM OUTFLOW (  2310.) IN STORAGE-OUTFLOW TABLE
WARNING --- ROUTED OUTFLOW (  2625.) IS GREATER THAN MAXIMUM OUTFLOW (  2310.) IN STORAGE-OUTFLOW TABLE
WARNING --- ROUTED OUTFLOW (  2328.) IS GREATER THAN MAXIMUM OUTFLOW (  2310.) IN STORAGE-OUTFLOW TABLE
```

po

24

```
WARNING --- ROUTED OUTFLOW (  824.) IS GREATER THAN MAXIMUM OUTFLOW (  503.) IN STORAGE-OUTFLOW TABLE
WARNING --- ROUTED OUTFLOW ( 1632.) IS GREATER THAN MAXIMUM OUTFLOW (  503.) IN STORAGE-OUTFLOW TABLE
WARNING --- ROUTED OUTFLOW ( 2756.) IS GREATER THAN MAXIMUM OUTFLOW (  503.) IN STORAGE-OUTFLOW TABLE
WARNING --- ROUTED OUTFLOW ( 3916.) IS GREATER THAN MAXIMUM OUTFLOW (  503.) IN STORAGE-OUTFLOW TABLE
WARNING --- ROUTED OUTFLOW ( 4686.) IS GREATER THAN MAXIMUM OUTFLOW (  503.) IN STORAGE-OUTFLOW TABLE
WARNING --- ROUTED OUTFLOW ( 4836.) IS GREATER THAN MAXIMUM OUTFLOW (  503.) IN STORAGE-OUTFLOW TABLE
WARNING --- ROUTED OUTFLOW ( 4440.) IS GREATER THAN MAXIMUM OUTFLOW (  503.) IN STORAGE-OUTFLOW TABLE
WARNING --- ROUTED OUTFLOW ( 3825.) IS GREATER THAN MAXIMUM OUTFLOW (  503.) IN STORAGE-OUTFLOW TABLE
WARNING --- ROUTED OUTFLOW ( 3157.) IS GREATER THAN MAXIMUM OUTFLOW (  503.) IN STORAGE-OUTFLOW TABLE
WARNING --- ROUTED OUTFLOW ( 2547.) IS GREATER THAN MAXIMUM OUTFLOW (  503.) IN STORAGE-OUTFLOW TABLE
WARNING --- ROUTED OUTFLOW ( 2073.) IS GREATER THAN MAXIMUM OUTFLOW (  503.) IN STORAGE-OUTFLOW TABLE
WARNING --- ROUTED OUTFLOW ( 1713.) IS GREATER THAN MAXIMUM OUTFLOW (  503.) IN STORAGE-OUTFLOW TABLE
WARNING --- ROUTED OUTFLOW ( 1440.) IS GREATER THAN MAXIMUM OUTFLOW (  503.) IN STORAGE-OUTFLOW TABLE
WARNING --- ROUTED OUTFLOW ( 1222.) IS GREATER THAN MAXIMUM OUTFLOW (  503.) IN STORAGE-OUTFLOW TABLE
WARNING --- ROUTED OUTFLOW ( 1022.) IS GREATER THAN MAXIMUM OUTFLOW (  503.) IN STORAGE-OUTFLOW TABLE
WARNING --- ROUTED OUTFLOW (  852.) IS GREATER THAN MAXIMUM OUTFLOW (  503.) IN STORAGE-OUTFLOW TABLE
WARNING --- ROUTED OUTFLOW (  726.) IS GREATER THAN MAXIMUM OUTFLOW (  503.) IN STORAGE-OUTFLOW TABLE
WARNING --- ROUTED OUTFLOW (  633.) IS GREATER THAN MAXIMUM OUTFLOW (  503.) IN STORAGE-OUTFLOW TABLE
WARNING --- ROUTED OUTFLOW (  569.) IS GREATER THAN MAXIMUM OUTFLOW (  503.) IN STORAGE-OUTFLOW TABLE
WARNING --- ROUTED OUTFLOW (  529.) IS GREATER THAN MAXIMUM OUTFLOW (  503.) IN STORAGE-OUTFLOW TABLE
WARNING --- ROUTED OUTFLOW (  958.) IS GREATER THAN MAXIMUM OUTFLOW (  503.) IN STORAGE-OUTFLOW TABLE
WARNING --- ROUTED OUTFLOW ( 1771.) IS GREATER THAN MAXIMUM OUTFLOW (  503.) IN STORAGE-OUTFLOW TABLE
WARNING --- ROUTED OUTFLOW ( 2801.) IS GREATER THAN MAXIMUM OUTFLOW (  503.) IN STORAGE-OUTFLOW TABLE
WARNING --- ROUTED OUTFLOW ( 3788.) IS GREATER THAN MAXIMUM OUTFLOW (  503.) IN STORAGE-OUTFLOW TABLE
WARNING --- ROUTED OUTFLOW ( 4428.) IS GREATER THAN MAXIMUM OUTFLOW (  503.) IN STORAGE-OUTFLOW TABLE
WARNING --- ROUTED OUTFLOW ( 4566.) IS GREATER THAN MAXIMUM OUTFLOW (  503.) IN STORAGE-OUTFLOW TABLE
WARNING --- ROUTED OUTFLOW ( 4281.) IS GREATER THAN MAXIMUM OUTFLOW (  503.) IN STORAGE-OUTFLOW TABLE
WARNING --- ROUTED OUTFLOW ( 3761.) IS GREATER THAN MAXIMUM OUTFLOW (  503.) IN STORAGE-OUTFLOW TABLE
WARNING --- ROUTED OUTFLOW ( 3163.) IS GREATER THAN MAXIMUM OUTFLOW (  503.) IN STORAGE-OUTFLOW TABLE
WARNING --- ROUTED OUTFLOW ( 2602.) IS GREATER THAN MAXIMUM OUTFLOW (  503.) IN STORAGE-OUTFLOW TABLE
WARNING --- ROUTED OUTFLOW ( 2136.) IS GREATER THAN MAXIMUM OUTFLOW (  503.) IN STORAGE-OUTFLOW TABLE
WARNING --- ROUTED OUTFLOW ( 1768.) IS GREATER THAN MAXIMUM OUTFLOW (  503.) IN STORAGE-OUTFLOW TABLE
WARNING --- ROUTED OUTFLOW ( 1481.) IS GREATER THAN MAXIMUM OUTFLOW (  503.) IN STORAGE-OUTFLOW TABLE
WARNING --- ROUTED OUTFLOW ( 1245.) IS GREATER THAN MAXIMUM OUTFLOW (  503.) IN STORAGE-OUTFLOW TABLE
WARNING --- ROUTED OUTFLOW ( 1042.) IS GREATER THAN MAXIMUM OUTFLOW (  503.) IN STORAGE-OUTFLOW TABLE
WARNING --- ROUTED OUTFLOW (  876.) IS GREATER THAN MAXIMUM OUTFLOW (  503.) IN STORAGE-OUTFLOW TABLE
```

```
WARNING --- ROUTED OUTFLOW (  747.) IS GREATER THAN MAXIMUM OUTFLOW (  503.) IN STORAGE-OUTFLOW TABLE
WARNING --- ROUTED OUTFLOW (  651.) IS GREATER THAN MAXIMUM OUTFLOW (  503.) IN STORAGE-OUTFLOW TABLE
WARNING --- ROUTED OUTFLOW (  584.) IS GREATER THAN MAXIMUM OUTFLOW (  503.) IN STORAGE-OUTFLOW TABLE
WARNING --- ROUTED OUTFLOW (  539.) IS GREATER THAN MAXIMUM OUTFLOW (  503.) IN STORAGE-OUTFLOW TABLE
WARNING --- ROUTED OUTFLOW (  510.) IS GREATER THAN MAXIMUM OUTFLOW (  503.) IN STORAGE-OUTFLOW TABLE
WARNING --- ROUTED OUTFLOW (  545.) IS GREATER THAN MAXIMUM OUTFLOW (  503.) IN STORAGE-OUTFLOW TABLE
WARNING --- ROUTED OUTFLOW ( 1084.) IS GREATER THAN MAXIMUM OUTFLOW (  503.) IN STORAGE-OUTFLOW TABLE
WARNING --- ROUTED OUTFLOW ( 1875.) IS GREATER THAN MAXIMUM OUTFLOW (  503.) IN STORAGE-OUTFLOW TABLE
WARNING --- ROUTED OUTFLOW ( 2808.) IS GREATER THAN MAXIMUM OUTFLOW (  503.) IN STORAGE-OUTFLOW TABLE
WARNING --- ROUTED OUTFLOW ( 3663.) IS GREATER THAN MAXIMUM OUTFLOW (  503.) IN STORAGE-OUTFLOW TABLE
WARNING --- ROUTED OUTFLOW ( 4212.) IS GREATER THAN MAXIMUM OUTFLOW (  503.) IN STORAGE-OUTFLOW TABLE
WARNING --- ROUTED OUTFLOW ( 4351.) IS GREATER THAN MAXIMUM OUTFLOW (  503.) IN STORAGE-OUTFLOW TABLE
WARNING --- ROUTED OUTFLOW ( 4134.) IS GREATER THAN MAXIMUM OUTFLOW (  503.) IN STORAGE-OUTFLOW TABLE
WARNING --- ROUTED OUTFLOW ( 3692.) IS GREATER THAN MAXIMUM OUTFLOW (  503.) IN STORAGE-OUTFLOW TABLE
WARNING --- ROUTED OUTFLOW ( 3160.) IS GREATER THAN MAXIMUM OUTFLOW (  503.) IN STORAGE-OUTFLOW TABLE
WARNING --- ROUTED OUTFLOW ( 2640.) IS GREATER THAN MAXIMUM OUTFLOW (  503.) IN STORAGE-OUTFLOW TABLE
WARNING --- ROUTED OUTFLOW ( 2187.) IS GREATER THAN MAXIMUM OUTFLOW (  503.) IN STORAGE-OUTFLOW TABLE
WARNING --- ROUTED OUTFLOW ( 1817.) IS GREATER THAN MAXIMUM OUTFLOW (  503.) IN STORAGE-OUTFLOW TABLE
WARNING --- ROUTED OUTFLOW ( 1518.) IS GREATER THAN MAXIMUM OUTFLOW (  503.) IN STORAGE-OUTFLOW TABLE
WARNING --- ROUTED OUTFLOW ( 1272.) IS GREATER THAN MAXIMUM OUTFLOW (  503.) IN STORAGE-OUTFLOW TABLE
WARNING --- ROUTED OUTFLOW ( 1066.) IS GREATER THAN MAXIMUM OUTFLOW (  503.) IN STORAGE-OUTFLOW TABLE
WARNING --- ROUTED OUTFLOW (  898.) IS GREATER THAN MAXIMUM OUTFLOW (  503.) IN STORAGE-OUTFLOW TABLE
WARNING --- ROUTED OUTFLOW (  767.) IS GREATER THAN MAXIMUM OUTFLOW (  503.) IN STORAGE-OUTFLOW TABLE
WARNING --- ROUTED OUTFLOW (  668.) IS GREATER THAN MAXIMUM OUTFLOW (  503.) IN STORAGE-OUTFLOW TABLE
WARNING --- ROUTED OUTFLOW (  598.) IS GREATER THAN MAXIMUM OUTFLOW (  503.) IN STORAGE-OUTFLOW TABLE
WARNING --- ROUTED OUTFLOW (  550.) IS GREATER THAN MAXIMUM OUTFLOW (  503.) IN STORAGE-OUTFLOW TABLE
WARNING --- ROUTED OUTFLOW (  517.) IS GREATER THAN MAXIMUM OUTFLOW (  503.) IN STORAGE-OUTFLOW TABLE
WARNING --- ROUTED OUTFLOW (  641.) IS GREATER THAN MAXIMUM OUTFLOW (  503.) IN STORAGE-OUTFLOW TABLE
WARNING --- ROUTED OUTFLOW ( 1192.) IS GREATER THAN MAXIMUM OUTFLOW (  503.) IN STORAGE-OUTFLOW TABLE
WARNING --- ROUTED OUTFLOW ( 1948.) IS GREATER THAN MAXIMUM OUTFLOW (  503.) IN STORAGE-OUTFLOW TABLE
WARNING --- ROUTED OUTFLOW ( 2795.) IS GREATER THAN MAXIMUM OUTFLOW (  503.) IN STORAGE-OUTFLOW TABLE
WARNING --- ROUTED OUTFLOW ( 3547.) IS GREATER THAN MAXIMUM OUTFLOW (  503.) IN STORAGE-OUTFLOW TABLE
WARNING --- ROUTED OUTFLOW ( 4030.) IS GREATER THAN MAXIMUM OUTFLOW (  503.) IN STORAGE-OUTFLOW TABLE
WARNING --- ROUTED OUTFLOW ( 4170.) IS GREATER THAN MAXIMUM OUTFLOW (  503.) IN STORAGE-OUTFLOW TABLE
WARNING --- ROUTED OUTFLOW ( 4001.) IS GREATER THAN MAXIMUM OUTFLOW (  503.) IN STORAGE-OUTFLOW TABLE
WARNING --- ROUTED OUTFLOW ( 3623.) IS GREATER THAN MAXIMUM OUTFLOW (  503.) IN STORAGE-OUTFLOW TABLE
```

WARNING --- ROUTED OUTFLOW (3147.) IS GREATER THAN MAXIMUM OUTFLOW (503.) IN STORAGE-OUTFLOW TABLE

WARNING --- ROUTED OUTFLOW (2664.) IS GREATER THAN MAXIMUM OUTFLOW (503.) IN STORAGE-OUTFLOW TABLE

WARNING --- ROUTED OUTFLOW (2229.) IS GREATER THAN MAXIMUM OUTFLOW (503.) IN STORAGE-OUTFLOW TABLE

WARNING --- ROUTED OUTFLOW (1859.) IS GREATER THAN MAXIMUM OUTFLOW (503.) IN STORAGE-OUTFLOW TABLE

WARNING --- ROUTED OUTFLOW (1554.) IS GREATER THAN MAXIMUM OUTFLOW (503.) IN STORAGE-OUTFLOW TABLE

WARNING --- ROUTED OUTFLOW (1301.) IS GREATER THAN MAXIMUM OUTFLOW (503.) IN STORAGE-OUTFLOW TABLE

WARNING --- ROUTED OUTFLOW (1091.) IS GREATER THAN MAXIMUM OUTFLOW (503.) IN STORAGE-OUTFLOW TABLE

WARNING --- ROUTED OUTFLOW (921.) IS GREATER THAN MAXIMUM OUTFLOW (503.) IN STORAGE-OUTFLOW TABLE

WARNING --- ROUTED OUTFLOW (787.) IS GREATER THAN MAXIMUM OUTFLOW (503.) IN STORAGE-OUTFLOW TABLE

WARNING --- ROUTED OUTFLOW (686.) IS GREATER THAN MAXIMUM OUTFLOW (503.) IN STORAGE-OUTFLOW TABLE

WARNING --- ROUTED OUTFLOW (612.) IS GREATER THAN MAXIMUM OUTFLOW (503.) IN STORAGE-OUTFLOW TABLE

WARNING --- ROUTED OUTFLOW (560.) IS GREATER THAN MAXIMUM OUTFLOW (503.) IN STORAGE-OUTFLOW TABLE

WARNING --- ROUTED OUTFLOW (524.) IS GREATER THAN MAXIMUM OUTFLOW (503.) IN STORAGE-OUTFLOW TABLE 30

WARNING --- ROUTED OUTFLOW (8327.) IS GREATER THAN MAXIMUM OUTFLOW (7950.) IN STORAGE-OUTFLOW TABLE

WARNING --- ROUTED OUTFLOW (8783.) IS GREATER THAN MAXIMUM OUTFLOW (7950.) IN STORAGE-OUTFLOW TABLE

WARNING --- ROUTED OUTFLOW (8539.) IS GREATER THAN MAXIMUM OUTFLOW (7950.) IN STORAGE-OUTFLOW TABLE

WARNING --- ROUTED OUTFLOW (7954.) IS GREATER THAN MAXIMUM OUTFLOW (7950.) IN STORAGE-OUTFLOW TABLE

WARNING --- ROUTED OUTFLOW (8207.) IS GREATER THAN MAXIMUM OUTFLOW (7950.) IN STORAGE-OUTFLOW TABLE

WARNING --- ROUTED OUTFLOW (8758.) IS GREATER THAN MAXIMUM OUTFLOW (7950.) IN STORAGE-OUTFLOW TABLE

WARNING --- ROUTED OUTFLOW (8604.) IS GREATER THAN MAXIMUM OUTFLOW (7950.) IN STORAGE-OUTFLOW TABLE

WARNING --- ROUTED OUTFLOW (8037.) IS GREATER THAN MAXIMUM OUTFLOW (7950.) IN STORAGE-OUTFLOW TABLE 31

WARNING --- ROUTED OUTFLOW (7115.) IS GREATER THAN MAXIMUM OUTFLOW (7028.) IN STORAGE-OUTFLOW TABLE

WARNING --- ROUTED OUTFLOW (8579.) IS GREATER THAN MAXIMUM OUTFLOW (7028.) IN STORAGE-OUTFLOW TABLE

WARNING --- ROUTED OUTFLOW (9540.) IS GREATER THAN MAXIMUM OUTFLOW (7028.) IN STORAGE-OUTFLOW TABLE

WARNING --- ROUTED OUTFLOW (9912.) IS GREATER THAN MAXIMUM OUTFLOW (7028.) IN STORAGE-OUTFLOW TABLE

WARNING --- ROUTED OUTFLOW (9714.) IS GREATER THAN MAXIMUM OUTFLOW (7028.) IN STORAGE-OUTFLOW TABLE

WARNING --- ROUTED OUTFLOW (9036.) IS GREATER THAN MAXIMUM OUTFLOW (7028.) IN STORAGE-OUTFLOW TABLE

WARNING --- ROUTED OUTFLOW (8038.) IS GREATER THAN MAXIMUM OUTFLOW (7028.) IN STORAGE-OUTFLOW TABLE

WARNING --- ROUTED OUTFLOW (7280.) IS GREATER THAN MAXIMUM OUTFLOW (7028.) IN STORAGE-OUTFLOW TABLE

WARNING --- ROUTED OUTFLOW (8590.) IS GREATER THAN MAXIMUM OUTFLOW (7028.) IN STORAGE-OUTFLOW TABLE

WARNING --- ROUTED OUTFLOW (9427.) IS GREATER THAN MAXIMUM OUTFLOW (7028.) IN STORAGE-OUTFLOW TABLE

WARNING --- ROUTED OUTFLOW (9711.) IS GREATER THAN MAXIMUM OUTFLOW (7028.) IN STORAGE-OUTFLOW TABLE

WARNING --- ROUTED OUTFLOW (9463.) IS GREATER THAN MAXIMUM OUTFLOW (7028.) IN STORAGE-OUTFLOW TABLE

WARNING --- ROUTED OUTFLOW (8781.) IS GREATER THAN MAXIMUM OUTFLOW (7028.) IN STORAGE-OUTFLOW TABLE

WARNING --- ROUTED OUTFLOW (7811.) IS GREATER THAN MAXIMUM OUTFLOW (7028.) IN STORAGE-OUTFLOW TABLE

WARNING --- ROUTED OUTFLOW (7404.) IS GREATER THAN MAXIMUM OUTFLOW (7028.) IN STORAGE-OUTFLOW TABLE

WARNING --- ROUTED OUTFLOW (8585.) IS GREATER THAN MAXIMUM OUTFLOW (7028.) IN STORAGE-OUTFLOW TABLE

WARNING --- ROUTED OUTFLOW (9309.) IS GREATER THAN MAXIMUM OUTFLOW (7028.) IN STORAGE-OUTFLOW TABLE

WARNING --- ROUTED OUTFLOW (9514.) IS GREATER THAN MAXIMUM OUTFLOW (7028.) IN STORAGE-OUTFLOW TABLE

WARNING --- ROUTED OUTFLOW (9226.) IS GREATER THAN MAXIMUM OUTFLOW (7028.) IN STORAGE-OUTFLOW TABLE

WARNING --- ROUTED OUTFLOW (8541.) IS GREATER THAN MAXIMUM OUTFLOW (7028.) IN STORAGE-OUTFLOW TABLE

WARNING --- ROUTED OUTFLOW (7606.) IS GREATER THAN MAXIMUM OUTFLOW (7028.) IN STORAGE-OUTFLOW TABLE

WARNING --- ROUTED OUTFLOW (7499.) IS GREATER THAN MAXIMUM OUTFLOW (7028.) IN STORAGE-OUTFLOW TABLE

WARNING --- ROUTED OUTFLOW (8565.) IS GREATER THAN MAXIMUM OUTFLOW (7028.) IN STORAGE-OUTFLOW TABLE

WARNING --- ROUTED OUTFLOW (9188.) IS GREATER THAN MAXIMUM OUTFLOW (7028.) IN STORAGE-OUTFLOW TABLE

WARNING --- ROUTED OUTFLOW (9322.) IS GREATER THAN MAXIMUM OUTFLOW (7028.) IN STORAGE-OUTFLOW TABLE

WARNING --- ROUTED OUTFLOW (8999.) IS GREATER THAN MAXIMUM OUTFLOW (7028.) IN STORAGE-OUTFLOW TABLE

WARNING --- ROUTED OUTFLOW (8318.) IS GREATER THAN MAXIMUM OUTFLOW (7028.) IN STORAGE-OUTFLOW TABLE

WARNING --- ROUTED OUTFLOW (7417.) IS GREATER THAN MAXIMUM OUTFLOW (7028.) IN STORAGE-OUTFLOW TABLE 32

WARNING --- ROUTED OUTFLOW (2991.) IS GREATER THAN MAXIMUM OUTFLOW (2772.) IN STORAGE-OUTFLOW TABLE

WARNING --- ROUTED OUTFLOW (4478.) IS GREATER THAN MAXIMUM OUTFLOW (2772.) IN STORAGE-OUTFLOW TABLE

WARNING --- ROUTED OUTFLOW (6168.) IS GREATER THAN MAXIMUM OUTFLOW (2772.) IN STORAGE-OUTFLOW TABLE

WARNING --- ROUTED OUTFLOW (7887.) IS GREATER THAN MAXIMUM OUTFLOW (2772.) IN STORAGE-OUTFLOW TABLE

WARNING --- ROUTED OUTFLOW (9443.) IS GREATER THAN MAXIMUM OUTFLOW (2772.) IN STORAGE-OUTFLOW TABLE

WARNING --- ROUTED OUTFLOW (10657.) IS GREATER THAN MAXIMUM OUTFLOW (2772.) IN STORAGE-OUTFLOW TABLE

WARNING --- ROUTED OUTFLOW (11483.) IS GREATER THAN MAXIMUM OUTFLOW (2772.) IN STORAGE-OUTFLOW TABLE

WARNING --- ROUTED OUTFLOW (11936.) IS GREATER THAN MAXIMUM OUTFLOW (2772.) IN STORAGE-OUTFLOW TABLE

WARNING --- ROUTED OUTFLOW (11829.) IS GREATER THAN MAXIMUM OUTFLOW (2772.) IN STORAGE-OUTFLOW TABLE

WARNING --- ROUTED OUTFLOW (11207.) IS GREATER THAN MAXIMUM OUTFLOW (2772.) IN STORAGE-OUTFLOW TABLE

WARNING --- ROUTED OUTFLOW (10260.) IS GREATER THAN MAXIMUM OUTFLOW (2772.) IN STORAGE-OUTFLOW TABLE

WARNING --- ROUTED OUTFLOW (9127.) IS GREATER THAN MAXIMUM OUTFLOW (2772.) IN STORAGE-OUTFLOW TABLE

WARNING --- ROUTED OUTFLOW (7952.) IS GREATER THAN MAXIMUM OUTFLOW (2772.) IN STORAGE-OUTFLOW TABLE

WARNING --- ROUTED OUTFLOW (6798.) IS GREATER THAN MAXIMUM OUTFLOW (2772.) IN STORAGE-OUTFLOW TABLE

WARNING --- ROUTED OUTFLOW (5741.) IS GREATER THAN MAXIMUM OUTFLOW (2772.) IN STORAGE-OUTFLOW TABLE

WARNING --- ROUTED OUTFLOW (4852.) IS GREATER THAN MAXIMUM OUTFLOW (2772.) IN STORAGE-OUTFLOW TABLE

WARNING --- ROUTED OUTFLOW (4108.) IS GREATER THAN MAXIMUM OUTFLOW (2772.) IN STORAGE-OUTFLOW TABLE

WARNING --- ROUTED OUTFLOW (3470.) IS GREATER THAN MAXIMUM OUTFLOW (2772.) IN STORAGE-OUTFLOW TABLE

WARNING --- ROUTED OUTFLOW (2877.) IS GREATER THAN MAXIMUM OUTFLOW (2772.) IN STORAGE-OUTFLOW TABLE

WARNING --- ROUTED OUTFLOW (3987.) IS GREATER THAN MAXIMUM OUTFLOW (2772.) IN STORAGE-OUTFLOW TABLE

WARNING --- ROUTED OUTFLOW (5602.) IS GREATER THAN MAXIMUM OUTFLOW (2772.) IN STORAGE-OUTFLOW TABLE

WARNING --- ROUTED OUTFLOW (7325.) IS GREATER THAN MAXIMUM OUTFLOW (2772.) IN STORAGE-OUTFLOW TABLE

WARNING --- ROUTED OUTFLOW (8945.) IS GREATER THAN MAXIMUM OUTFLOW (2772.) IN STORAGE-OUTFLOW TABLE

WARNING --- ROUTED OUTFLOW (10281.) IS GREATER THAN MAXIMUM OUTFLOW (2772.) IN STORAGE-OUTFLOW TABLE

WARNING --- ROUTED OUTFLOW (11235.) IS GREATER THAN MAXIMUM OUTFLOW (2772.) IN STORAGE-OUTFLOW TABLE

WARNING --- ROUTED OUTFLOW (11808.) IS GREATER THAN MAXIMUM OUTFLOW (2772.) IN STORAGE-OUTFLOW TABLE

WARNING --- ROUTED OUTFLOW (11898.) IS GREATER THAN MAXIMUM OUTFLOW (2772.) IN STORAGE-OUTFLOW TABLE

WARNING --- ROUTED OUTFLOW (11439.) IS GREATER THAN MAXIMUM OUTFLOW (2772.) IN STORAGE-OUTFLOW TABLE

WARNING --- ROUTED OUTFLOW (10586.) IS GREATER THAN MAXIMUM OUTFLOW (2772.) IN STORAGE-OUTFLOW TABLE

WARNING --- ROUTED OUTFLOW (9507.) IS GREATER THAN MAXIMUM OUTFLOW (2772.) IN STORAGE-OUTFLOW TABLE

WARNING --- ROUTED OUTFLOW (8337.) IS GREATER THAN MAXIMUM OUTFLOW (2772.) IN STORAGE-OUTFLOW TABLE

WARNING --- ROUTED OUTFLOW (7174.) IS GREATER THAN MAXIMUM OUTFLOW (2772.) IN STORAGE-OUTFLOW TABLE

WARNING --- ROUTED OUTFLOW (6081.) IS GREATER THAN MAXIMUM OUTFLOW (2772.) IN STORAGE-OUTFLOW TABLE

WARNING --- ROUTED OUTFLOW (5133.) IS GREATER THAN MAXIMUM OUTFLOW (2772.) IN STORAGE-OUTFLOW TABLE

WARNING --- ROUTED OUTFLOW (4344.) IS GREATER THAN MAXIMUM OUTFLOW (2772.) IN STORAGE-OUTFLOW TABLE

WARNING --- ROUTED OUTFLOW (3673.) IS GREATER THAN MAXIMUM OUTFLOW (2772.) IN STORAGE-OUTFLOW TABLE

WARNING --- ROUTED OUTFLOW (3069.) IS GREATER THAN MAXIMUM OUTFLOW (2772.) IN STORAGE-OUTFLOW TABLE

WARNING --- ROUTED OUTFLOW (3493.) IS GREATER THAN MAXIMUM OUTFLOW (2772.) IN STORAGE-OUTFLOW TABLE

WARNING --- ROUTED OUTFLOW (5066.) IS GREATER THAN MAXIMUM OUTFLOW (2772.) IN STORAGE-OUTFLOW TABLE

WARNING --- ROUTED OUTFLOW (6756.) IS GREATER THAN MAXIMUM OUTFLOW (2772.) IN STORAGE-OUTFLOW TABLE

WARNING --- ROUTED OUTFLOW (8423.) IS GREATER THAN MAXIMUM OUTFLOW (2772.) IN STORAGE-OUTFLOW TABLE

WARNING --- ROUTED OUTFLOW (9861.) IS GREATER THAN MAXIMUM OUTFLOW (2772.) IN STORAGE-OUTFLOW TABLE

WARNING --- ROUTED OUTFLOW (10945.) IS GREATER THAN MAXIMUM OUTFLOW (2772.) IN STORAGE-OUTFLOW TABLE

WARNING --- ROUTED OUTFLOW (11642.) IS GREATER THAN MAXIMUM OUTFLOW (2772.) IN STORAGE-OUTFLOW TABLE

WARNING --- ROUTED OUTFLOW (11897.) IS GREATER THAN MAXIMUM OUTFLOW (2772.) IN STORAGE-OUTFLOW TABLE

WARNING --- ROUTED OUTFLOW (11621.) IS GREATER THAN MAXIMUM OUTFLOW (2772.) IN STORAGE-OUTFLOW TABLE

WARNING --- ROUTED OUTFLOW (10886.) IS GREATER THAN MAXIMUM OUTFLOW (2772.) IN STORAGE-OUTFLOW TABLE

WARNING --- ROUTED OUTFLOW (9871.) IS GREATER THAN MAXIMUM OUTFLOW (2772.) IN STORAGE-OUTFLOW TABLE

WARNING --- ROUTED OUTFLOW (8724.) IS GREATER THAN MAXIMUM OUTFLOW (2772.) IN STORAGE-OUTFLOW TABLE

WARNING --- ROUTED OUTFLOW (7553.) IS GREATER THAN MAXIMUM OUTFLOW (2772.) IN STORAGE-OUTFLOW TABLE

WARNING --- ROUTED OUTFLOW (6434.) IS GREATER THAN MAXIMUM OUTFLOW (2772.) IN STORAGE-OUTFLOW TABLE

WARNING --- ROUTED OUTFLOW (5434.) IS GREATER THAN MAXIMUM OUTFLOW (2772.) IN STORAGE-OUTFLOW TABLE

WARNING --- ROUTED OUTFLOW (4593.) IS GREATER THAN MAXIMUM OUTFLOW (2772.) IN STORAGE-OUTFLOW TABLE

WARNING --- ROUTED OUTFLOW (3887.) IS GREATER THAN MAXIMUM OUTFLOW (2772.) IN STORAGE-OUTFLOW TABLE

WARNING --- ROUTED OUTFLOW (3263.) IS GREATER THAN MAXIMUM OUTFLOW (2772.) IN STORAGE-OUTFLOW TABLE

WARNING --- ROUTED OUTFLOW (3005.) IS GREATER THAN MAXIMUM OUTFLOW (2772.) IN STORAGE-OUTFLOW TABLE

WARNING --- ROUTED OUTFLOW (4546.) IS GREATER THAN MAXIMUM OUTFLOW (2772.) IN STORAGE-OUTFLOW TABLE

WARNING --- ROUTED OUTFLOW (6196.) IS GREATER THAN MAXIMUM OUTFLOW (2772.) IN STORAGE-OUTFLOW TABLE

WARNING --- ROUTED OUTFLOW (7880.) IS GREATER THAN MAXIMUM OUTFLOW (2772.) IN STORAGE-OUTFLOW TABLE

```
WARNING --- ROUTED OUTFLOW (  9406.) IS GREATER THAN MAXIMUM OUTFLOW (  2772.) IN STORAGE-OUTFLOW TABLE
WARNING --- ROUTED OUTFLOW ( 10611.) IS GREATER THAN MAXIMUM OUTFLOW (  2772.) IN STORAGE-OUTFLOW TABLE
WARNING --- ROUTED OUTFLOW ( 11436.) IS GREATER THAN MAXIMUM OUTFLOW (  2772.) IN STORAGE-OUTFLOW TABLE
WARNING --- ROUTED OUTFLOW ( 11839.) IS GREATER THAN MAXIMUM OUTFLOW (  2772.) IN STORAGE-OUTFLOW TABLE
WARNING --- ROUTED OUTFLOW ( 11742.) IS GREATER THAN MAXIMUM OUTFLOW (  2772.) IN STORAGE-OUTFLOW TABLE
WARNING --- ROUTED OUTFLOW ( 11151.) IS GREATER THAN MAXIMUM OUTFLOW (  2772.) IN STORAGE-OUTFLOW TABLE
WARNING --- ROUTED OUTFLOW ( 10217.) IS GREATER THAN MAXIMUM OUTFLOW (  2772.) IN STORAGE-OUTFLOW TABLE
WARNING --- ROUTED OUTFLOW (  9106.) IS GREATER THAN MAXIMUM OUTFLOW (  2772.) IN STORAGE-OUTFLOW TABLE
WARNING --- ROUTED OUTFLOW (  7937.) IS GREATER THAN MAXIMUM OUTFLOW (  2772.) IN STORAGE-OUTFLOW TABLE
WARNING --- ROUTED OUTFLOW (  6797.) IS GREATER THAN MAXIMUM OUTFLOW (  2772.) IN STORAGE-OUTFLOW TABLE
WARNING --- ROUTED OUTFLOW (  5754.) IS GREATER THAN MAXIMUM OUTFLOW (  2772.) IN STORAGE-OUTFLOW TABLE
WARNING --- ROUTED OUTFLOW (  4859.) IS GREATER THAN MAXIMUM OUTFLOW (  2772.) IN STORAGE-OUTFLOW TABLE
WARNING --- ROUTED OUTFLOW (  4111.) IS GREATER THAN MAXIMUM OUTFLOW (  2772.) IN STORAGE-OUTFLOW TABLE
WARNING --- ROUTED OUTFLOW (  3463.) IS GREATER THAN MAXIMUM OUTFLOW (  2772.) IN STORAGE-OUTFLOW TABLE
WARNING --- ROUTED OUTFLOW (  2882.) IS GREATER THAN MAXIMUM OUTFLOW (  2772.) IN STORAGE-OUTFLOW TABLE
WARNING --- ROUTED OUTFLOW (  4034.) IS GREATER THAN MAXIMUM OUTFLOW (  2772.) IN STORAGE-OUTFLOW TABLE
WARNING --- ROUTED OUTFLOW (  5650.) IS GREATER THAN MAXIMUM OUTFLOW (  2772.) IN STORAGE-OUTFLOW TABLE
WARNING --- ROUTED OUTFLOW (  7328.) IS GREATER THAN MAXIMUM OUTFLOW (  2772.) IN STORAGE-OUTFLOW TABLE
WARNING --- ROUTED OUTFLOW (  8918.) IS GREATER THAN MAXIMUM OUTFLOW (  2772.) IN STORAGE-OUTFLOW TABLE
WARNING --- ROUTED OUTFLOW ( 10236.) IS GREATER THAN MAXIMUM OUTFLOW (  2772.) IN STORAGE-OUTFLOW TABLE
WARNING --- ROUTED OUTFLOW ( 11188.) IS GREATER THAN MAXIMUM OUTFLOW (  2772.) IN STORAGE-OUTFLOW TABLE
WARNING --- ROUTED OUTFLOW ( 11731.) IS GREATER THAN MAXIMUM OUTFLOW (  2772.) IN STORAGE-OUTFLOW TABLE
WARNING --- ROUTED OUTFLOW ( 11803.) IS GREATER THAN MAXIMUM OUTFLOW (  2772.) IN STORAGE-OUTFLOW TABLE
WARNING --- ROUTED OUTFLOW ( 11372.) IS GREATER THAN MAXIMUM OUTFLOW (  2772.) IN STORAGE-OUTFLOW TABLE
WARNING --- ROUTED OUTFLOW ( 10540.) IS GREATER THAN MAXIMUM OUTFLOW (  2772.) IN STORAGE-OUTFLOW TABLE
WARNING --- ROUTED OUTFLOW (  9478.) IS GREATER THAN MAXIMUM OUTFLOW (  2772.) IN STORAGE-OUTFLOW TABLE
WARNING --- ROUTED OUTFLOW (  8321.) IS GREATER THAN MAXIMUM OUTFLOW (  2772.) IN STORAGE-OUTFLOW TABLE
WARNING --- ROUTED OUTFLOW (  7167.) IS GREATER THAN MAXIMUM OUTFLOW (  2772.) IN STORAGE-OUTFLOW TABLE
WARNING --- ROUTED OUTFLOW (  6089.) IS GREATER THAN MAXIMUM OUTFLOW (  2772.) IN STORAGE-OUTFLOW TABLE
WARNING --- ROUTED OUTFLOW (  5143.) IS GREATER THAN MAXIMUM OUTFLOW (  2772.) IN STORAGE-OUTFLOW TABLE
WARNING --- ROUTED OUTFLOW (  4347.) IS GREATER THAN MAXIMUM OUTFLOW (  2772.) IN STORAGE-OUTFLOW TABLE
WARNING --- ROUTED OUTFLOW (  3670.) IS GREATER THAN MAXIMUM OUTFLOW (  2772.) IN STORAGE-OUTFLOW TABLE
WARNING --- ROUTED OUTFLOW (  3069.) IS GREATER THAN MAXIMUM OUTFLOW (  2772.) IN STORAGE-OUTFLOW TABLE
WARNING --- ROUTED OUTFLOW (  2841.) IS GREATER THAN MAXIMUM OUTFLOW (  2420.) IN STORAGE-OUTFLOW TABLE
WARNING --- ROUTED OUTFLOW (  3991.) IS GREATER THAN MAXIMUM OUTFLOW (  2420.) IN STORAGE-OUTFLOW TABLE
WARNING --- ROUTED OUTFLOW (  5689.) IS GREATER THAN MAXIMUM OUTFLOW (  2420.) IN STORAGE-OUTFLOW TABLE
```

WARNING --- ROUTED OUTFLOW (7807.) IS GREATER THAN MAXIMUM OUTFLOW (2420.) IN STORAGE-OUTFLOW TABLE

WARNING --- ROUTED OUTFLOW (10055.) IS GREATER THAN MAXIMUM OUTFLOW (2420.) IN STORAGE-OUTFLOW TABLE

WARNING --- ROUTED OUTFLOW (12087.) IS GREATER THAN MAXIMUM OUTFLOW (2420.) IN STORAGE-OUTFLOW TABLE

WARNING --- ROUTED OUTFLOW (13693.) IS GREATER THAN MAXIMUM OUTFLOW (2420.) IN STORAGE-OUTFLOW TABLE

WARNING --- ROUTED OUTFLOW (14825.) IS GREATER THAN MAXIMUM OUTFLOW (2420.) IN STORAGE-OUTFLOW TABLE

WARNING --- ROUTED OUTFLOW (15475.) IS GREATER THAN MAXIMUM OUTFLOW (2420.) IN STORAGE-OUTFLOW TABLE

WARNING --- ROUTED OUTFLOW (15627.) IS GREATER THAN MAXIMUM OUTFLOW (2420.) IN STORAGE-OUTFLOW TABLE

WARNING --- ROUTED OUTFLOW (15292.) IS GREATER THAN MAXIMUM OUTFLOW (2420.) IN STORAGE-OUTFLOW TABLE

WARNING --- ROUTED OUTFLOW (14536.) IS GREATER THAN MAXIMUM OUTFLOW (2420.) IN STORAGE-OUTFLOW TABLE

WARNING --- ROUTED OUTFLOW (13483.) IS GREATER THAN MAXIMUM OUTFLOW (2420.) IN STORAGE-OUTFLOW TABLE

WARNING --- ROUTED OUTFLOW (12259.) IS GREATER THAN MAXIMUM OUTFLOW (2420.) IN STORAGE-OUTFLOW TABLE

WARNING --- ROUTED OUTFLOW (10952.) IS GREATER THAN MAXIMUM OUTFLOW (2420.) IN STORAGE-OUTFLOW TABLE

WARNING --- ROUTED OUTFLOW (9631.) IS GREATER THAN MAXIMUM OUTFLOW (2420.) IN STORAGE-OUTFLOW TABLE

WARNING --- ROUTED OUTFLOW (8363.) IS GREATER THAN MAXIMUM OUTFLOW (2420.) IN STORAGE-OUTFLOW TABLE

WARNING --- ROUTED OUTFLOW (7202.) IS GREATER THAN MAXIMUM OUTFLOW (2420.) IN STORAGE-OUTFLOW TABLE

WARNING --- ROUTED OUTFLOW (6169.) IS GREATER THAN MAXIMUM OUTFLOW (2420.) IN STORAGE-OUTFLOW TABLE

WARNING --- ROUTED OUTFLOW (5269.) IS GREATER THAN MAXIMUM OUTFLOW (2420.) IN STORAGE-OUTFLOW TABLE

WARNING --- ROUTED OUTFLOW (4497.) IS GREATER THAN MAXIMUM OUTFLOW (2420.) IN STORAGE-OUTFLOW TABLE

WARNING --- ROUTED OUTFLOW (3858.) IS GREATER THAN MAXIMUM OUTFLOW (2420.) IN STORAGE-OUTFLOW TABLE

WARNING --- ROUTED OUTFLOW (3342.) IS GREATER THAN MAXIMUM OUTFLOW (2420.) IN STORAGE-OUTFLOW TABLE

WARNING --- ROUTED OUTFLOW (2923.) IS GREATER THAN MAXIMUM OUTFLOW (2420.) IN STORAGE-OUTFLOW TABLE

WARNING --- ROUTED OUTFLOW (2576.) IS GREATER THAN MAXIMUM OUTFLOW (2420.) IN STORAGE-OUTFLOW TABLE 33

WARNING --- ROUTED OUTFLOW (4690.) IS GREATER THAN MAXIMUM OUTFLOW (4212.) IN STORAGE-OUTFLOW TABLE

WARNING --- ROUTED OUTFLOW (6281.) IS GREATER THAN MAXIMUM OUTFLOW (4212.) IN STORAGE-OUTFLOW TABLE

WARNING --- ROUTED OUTFLOW (8078.) IS GREATER THAN MAXIMUM OUTFLOW (4212.) IN STORAGE-OUTFLOW TABLE

WARNING --- ROUTED OUTFLOW (9883.) IS GREATER THAN MAXIMUM OUTFLOW (4212.) IN STORAGE-OUTFLOW TABLE

WARNING --- ROUTED OUTFLOW (11525.) IS GREATER THAN MAXIMUM OUTFLOW (4212.) IN STORAGE-OUTFLOW TABLE

WARNING --- ROUTED OUTFLOW (12885.) IS GREATER THAN MAXIMUM OUTFLOW (4212.) IN STORAGE-OUTFLOW TABLE

WARNING --- ROUTED OUTFLOW (13885.) IS GREATER THAN MAXIMUM OUTFLOW (4212.) IN STORAGE-OUTFLOW TABLE

WARNING --- ROUTED OUTFLOW (14476.) IS GREATER THAN MAXIMUM OUTFLOW (4212.) IN STORAGE-OUTFLOW TABLE

WARNING --- ROUTED OUTFLOW (14640.) IS GREATER THAN MAXIMUM OUTFLOW (4212.) IN STORAGE-OUTFLOW TABLE

WARNING --- ROUTED OUTFLOW (14403.) IS GREATER THAN MAXIMUM OUTFLOW (4212.) IN STORAGE-OUTFLOW TABLE

WARNING --- ROUTED OUTFLOW (13829.) IS GREATER THAN MAXIMUM OUTFLOW (4212.) IN STORAGE-OUTFLOW TABLE

WARNING --- ROUTED OUTFLOW (12995.) IS GREATER THAN MAXIMUM OUTFLOW (4212.) IN STORAGE-OUTFLOW TABLE

WARNING --- ROUTED OUTFLOW (11981.) IS GREATER THAN MAXIMUM OUTFLOW (4212.) IN STORAGE-OUTFLOW TABLE

WARNING --- ROUTED OUTFLOW (10861.) IS GREATER THAN MAXIMUM OUTFLOW (4212.) IN STORAGE-OUTFLOW TABLE

```
WARNING --- ROUTED OUTFLOW (  9706.) IS GREATER THAN MAXIMUM OUTFLOW (  4212.) IN STORAGE-OUTFLOW TABLE
WARNING --- ROUTED OUTFLOW (  8573.) IS GREATER THAN MAXIMUM OUTFLOW (  4212.) IN STORAGE-OUTFLOW TABLE
WARNING --- ROUTED OUTFLOW (  7502.) IS GREATER THAN MAXIMUM OUTFLOW (  4212.) IN STORAGE-OUTFLOW TABLE
WARNING --- ROUTED OUTFLOW (  6520.) IS GREATER THAN MAXIMUM OUTFLOW (  4212.) IN STORAGE-OUTFLOW TABLE
WARNING --- ROUTED OUTFLOW (  5641.) IS GREATER THAN MAXIMUM OUTFLOW (  4212.) IN STORAGE-OUTFLOW TABLE
WARNING --- ROUTED OUTFLOW (  4875.) IS GREATER THAN MAXIMUM OUTFLOW (  4212.) IN STORAGE-OUTFLOW TABLE
WARNING --- ROUTED OUTFLOW (  4221.) IS GREATER THAN MAXIMUM OUTFLOW (  4212.) IN STORAGE-OUTFLOW TABLE
WARNING --- ROUTED OUTFLOW (  5179.) IS GREATER THAN MAXIMUM OUTFLOW (  4212.) IN STORAGE-OUTFLOW TABLE
WARNING --- ROUTED OUTFLOW (  6605.) IS GREATER THAN MAXIMUM OUTFLOW (  4212.) IN STORAGE-OUTFLOW TABLE
WARNING --- ROUTED OUTFLOW (  8143.) IS GREATER THAN MAXIMUM OUTFLOW (  4212.) IN STORAGE-OUTFLOW TABLE
WARNING --- ROUTED OUTFLOW (  9667.) IS GREATER THAN MAXIMUM OUTFLOW (  4212.) IN STORAGE-OUTFLOW TABLE
WARNING --- ROUTED OUTFLOW ( 11062.) IS GREATER THAN MAXIMUM OUTFLOW (  4212.) IN STORAGE-OUTFLOW TABLE
WARNING --- ROUTED OUTFLOW ( 12232.) IS GREATER THAN MAXIMUM OUTFLOW (  4212.) IN STORAGE-OUTFLOW TABLE
WARNING --- ROUTED OUTFLOW ( 13104.) IS GREATER THAN MAXIMUM OUTFLOW (  4212.) IN STORAGE-OUTFLOW TABLE
WARNING --- ROUTED OUTFLOW ( 13636.) IS GREATER THAN MAXIMUM OUTFLOW (  4212.) IN STORAGE-OUTFLOW TABLE
WARNING --- ROUTED OUTFLOW ( 13816.) IS GREATER THAN MAXIMUM OUTFLOW (  4212.) IN STORAGE-OUTFLOW TABLE
WARNING --- ROUTED OUTFLOW ( 13664.) IS GREATER THAN MAXIMUM OUTFLOW (  4212.) IN STORAGE-OUTFLOW TABLE
WARNING --- ROUTED OUTFLOW ( 13223.) IS GREATER THAN MAXIMUM OUTFLOW (  4212.) IN STORAGE-OUTFLOW TABLE
WARNING --- ROUTED OUTFLOW ( 12547.) IS GREATER THAN MAXIMUM OUTFLOW (  4212.) IN STORAGE-OUTFLOW TABLE
WARNING --- ROUTED OUTFLOW ( 11698.) IS GREATER THAN MAXIMUM OUTFLOW (  4212.) IN STORAGE-OUTFLOW TABLE
WARNING --- ROUTED OUTFLOW ( 10738.) IS GREATER THAN MAXIMUM OUTFLOW (  4212.) IN STORAGE-OUTFLOW TABLE
WARNING --- ROUTED OUTFLOW (  9725.) IS GREATER THAN MAXIMUM OUTFLOW (  4212.) IN STORAGE-OUTFLOW TABLE
WARNING --- ROUTED OUTFLOW (  8707.) IS GREATER THAN MAXIMUM OUTFLOW (  4212.) IN STORAGE-OUTFLOW TABLE
WARNING --- ROUTED OUTFLOW (  7721.) IS GREATER THAN MAXIMUM OUTFLOW (  4212.) IN STORAGE-OUTFLOW TABLE
WARNING --- ROUTED OUTFLOW (  6797.) IS GREATER THAN MAXIMUM OUTFLOW (  4212.) IN STORAGE-OUTFLOW TABLE
WARNING --- ROUTED OUTFLOW (  5954.) IS GREATER THAN MAXIMUM OUTFLOW (  4212.) IN STORAGE-OUTFLOW TABLE
WARNING --- ROUTED OUTFLOW (  5200.) IS GREATER THAN MAXIMUM OUTFLOW (  4212.) IN STORAGE-OUTFLOW TABLE
WARNING --- ROUTED OUTFLOW (  4540.) IS GREATER THAN MAXIMUM OUTFLOW (  4212.) IN STORAGE-OUTFLOW TABLE

*** *** *** *** *** *** *** *** *** *** *** *** *** *** *** *** *** *** *** *** *** *** *** *** *** *** *** *** *** *** *** *** *** *** ***

        *************
        *           *
1177 KK *    RS47   *
        *           *
        *************

1178 KO        OUTPUT CONTROL VARIABLES
               IPRNT        1  PRINT CONTROL
               IPLOT        2  PLOT CONTROL
               QSCAL        0.  HYDROGRAPH PLOT SCALE
```

STORAGE ROUTE TROUGH WHITE TANKS STRUCTURE NO. 4.

HYDROGRAPH ROUTING DATA

```
1180 RS      STORAGE ROUTING
               NSTPS        1  NUMBER OF SUBREACHES
               ITYP      STOR  TYPE OF INITIAL CONDITION
              RSVRIC      .00  INITIAL CONDITION
                 X        .00 WORKING R AND D COEFFICIENT

1181 SV       STORAGE      .0     2.8    51.0   148.0   277.0   543.0  1269.0  1396.0  1690.0  2045.0
                 2246.0

1183 SQ      DISCHARGE     0.     0.     0.     0.     0.     0.     0.    375.   2600.   6150.
                 14700.

1185 SE      ELEVATION   997.00 1000.00 1010.00 1020.00 1030.00 1040.00 1049.00 1050.00 1052.00 1054.00
                 1055.00
```

...

HYDROGRAPH AT STATION RS47

DA	MON	HRMN	ORD	OUTFLOW	STORAGE	STAGE	DA	MON	HRMN	ORD	OUTFLOW	STORAGE	STAGE	DA	MON	HRMN	ORD	OUTFLOW	STORAGE	STAGE
1	0000	1	0.	.0	997.0	* 1	0820	101	1550.	1551.3	1051.1	* 1	1640	201	104.	1304.2	1049.3			
1	0005	2	0.	.0	997.0	* 1	0825	102	1479.	1541.9	1051.0	* 1	1645	202	102.	1303.5	1049.3			
1	0010	3	0.	.0	997.0	* 1	0830	103	1412.	1533.0	1050.9	* 1	1650	203	100.	1302.9	1049.3			
1	0015	4	0.	.0	997.0	* 1	0835	104	1348.	1524.5	1050.9	* 1	1655	204	98.	1302.2	1049.3			
1	0020	5	0.	.0	997.0	* 1	0840	105	1286.	1516.4	1050.8	* 1	1700	205	96.	1301.6	1049.3			
1	0025	6	0.	.0	997.0	* 1	0845	106	1227.	1508.6	1050.8	* 1	1705	206	94.	1300.9	1049.3			
1	0030	7	0.	.0	997.0	* 1	0850	107	1171.	1501.2	1050.7	* 1	1710	207	92.	1300.3	1049.2			
1	0035	8	0.	.0	997.0	* 1	0855	108	1118.	1494.2	1050.7	* 1	1715	208	91.	1299.7	1049.2			
1	0040	9	0.	.0	997.0	* 1	0900	109	1067.	1487.5	1050.6	* 1	1720	209	89.	1299.1	1049.2			
1	0045	10	0.	.0	997.0	* 1	0905	110	1019.	1481.1	1050.6	* 1	1725	210	87.	1298.5	1049.2			
1	0050	11	0.	.0	997.0	* 1	0910	111	972.	1475.0	1050.5	* 1	1730	211	85.	1298.0	1049.2			
1	0055	12	0.	.0	997.0	* 1	0915	112	928.	1469.1	1050.5	* 1	1735	212	84.	1297.4	1049.2			
1	0100	13	0.	.0	997.0	* 1	0920	113	887.	1463.6	1050.5	* 1	1740	213	82.	1296.8	1049.2			
1	0105	14	0.	.0	997.0	* 1	0925	114	847.	1458.3	1050.4	* 1	1745	214	81.	1296.3	1049.2			
1	0110	15	0.	.0	997.0	* 1	0930	115	808.	1453.3	1050.4	* 1	1750	215	79.	1295.8	1049.2			
1	0115	16	0.	.0	997.0	* 1	0935	116	772.	1448.5	1050.4	* 1	1755	216	77.	1295.2	1049.2			
1	0120	17	0.	.0	997.0	* 1	0940	117	738.	1443.9	1050.3	* 1	1800	217	76.	1294.7	1049.2			
1	0125	18	0.	.0	997.0	* 1	0945	118	704.	1439.5	1050.3	* 1	1805	218	74.	1294.2	1049.2			
1	0130	19	0.	.0	997.1	* 1	0950	119	673.	1435.4	1050.3	* 1	1810	219	73.	1293.7	1049.2			
1	0135	20	0.	.1	997.1	* 1	0955	120	643.	1431.4	1050.2	* 1	1815	220	72.	1293.2	1049.2			
1	0140	21	0.	.1	997.1	* 1	1000	121	614.	1427.6	1050.2	* 1	1820	221	70.	1292.8	1049.2			
1	0145	22	0.	.1	997.1	* 1	1005	122	587.	1424.0	1050.2	* 1	1825	222	69.	1292.3	1049.2			
1	0150	23	0.	.1	997.1	* 1	1010	123	561.	1420.6	1050.2	* 1	1830	223	67.	1291.8	1049.2			
1	0155	24	0.	.1	997.1	* 1	1015	124	537.	1417.3	1050.1	* 1	1835	224	66.	1291.4	1049.2			
1	0200	25	0.	.1	997.1	* 1	1020	125	513.	1414.2	1050.1	* 1	1840	225	65.	1291.0	1049.2			
1	0205	26	0.	.5	997.6	* 1	1025	126	490.	1411.3	1050.1	* 1	1845	226	64.	1290.5	1049.2			
1	0210	27	0.	2.9	1000.0	* 1	1030	127	469.	1408.4	1050.1	* 1	1850	227	62.	1290.1	1049.2			
1	0215	28	0.	9.3	1001.3	* 1	1035	128	449.	1405.7	1050.1	* 1	1855	228	61.	1289.7	1049.2			
1	0220	29	0.	21.4	1003.9	* 1	1040	129	429.	1403.1	1050.0	* 1	1900	229	60.	1289.3	1049.2			
1	0225	30	0.	41.1	1008.0	* 1	1045	130	410.	1400.7	1050.0	* 1	1905	230	59.	1288.9	1049.2			
1	0230	31	0.	68.4	1011.8	* 1	1050	131	392.	1398.3	1050.0	* 1	1910	231	58.	1288.5	1049.2			
1	0235	32	0.	102.1	1015.3	* 1	1055	132	375.	1396.0	1050.0	* 1	1915	232	56.	1288.1	1049.2			
1	0240	33	0.	142.9	1019.5	* 1	1100	133	369.	1393.9	1050.0	* 1	1920	233	55.	1287.7	1049.1			
1	0245	34	0.	191.4	1023.4	* 1	1105	134	362.	1391.7	1050.0	* 1	1925	234	54.	1287.4	1049.1			
1	0250	35	0.	247.0	1027.7	* 1	1110	135	356.	1389.6	1049.9	* 1	1930	235	53.	1287.0	1049.1			
1	0255	36	0.	311.0	1031.3	* 1	1115	136	350.	1387.5	1049.9	* 1	1935	236	52.	1286.7	1049.1			
1	0300	37	0.	387.6	1034.2	* 1	1120	137	344.	1385.4	1049.9	* 1	1940	237	51.	1286.3	1049.1			
1	0305	38	0.	479.5	1037.6	* 1	1125	138	338.	1383.4	1049.9	* 1	1945	238	50.	1286.0	1049.1			
1	0310	39	0.	586.4	1040.5	* 1	1130	139	332.	1381.4	1049.9	* 1	1950	239	49.	1285.6	1049.1			
1	0315	40	0.	706.3	1042.0	* 1	1135	140	326.	1379.4	1049.9	* 1	1955	240	48.	1285.3	1049.1			
1	0320	41	0.	836.6	1043.6	* 1	1140	141	320.	1377.5	1049.9	* 1	2000	241	47.	1285.0	1049.1			

1	0325	42	0.	974.5	1045.3	*	1	1145	142	315.	1375.6	1049.8	*	1	2005	242	46.	1284.7	1049.1
1	0330	43	0.	1117.1	1047.1	*	1	1150	143	309.	1373.7	1049.8	*	1	2010	243	45.	1284.4	1049.1
1	0335	44	0.	1261.9	1048.9	*	1	1155	144	304.	1371.9	1049.8	*	1	2015	244	44.	1284.1	1049.1
1	0340	45	443.	1405.0	1050.1	*	1	1200	145	298.	1370.0	1049.8	*	1	2020	245	44.	1283.8	1049.1
1	0345	46	1471.	1540.9	1051.0	*	1	1205	146	293.	1368.2	1049.8	*	1	2025	246	43.	1283.5	1049.1
1	0350	47	2420.	1666.3	1051.8	*	1	1210	147	288.	1366.5	1049.8	*	1	2030	247	42.	1283.2	1049.1
1	0355	48	3498.	1779.8	1052.5	*	1	1215	148	283.	1364.7	1049.8	*	1	2035	248	41.	1282.9	1049.1
1	0400	49	4503.	1880.3	1053.1	*	1	1220	149	278.	1363.0	1049.7	*	1	2040	249	40.	1282.6	1049.1
1	0405	50	5379.	1967.9	1053.6	*	1	1225	150	273.	1361.3	1049.7	*	1	2045	250	39.	1282.4	1049.1
1	0410	51	6133.	2043.3	1054.0	*	1	1230	151	268.	1359.7	1049.7	*	1	2050	251	39.	1282.1	1049.1
1	0415	52	8531.	2101.0	1054.3	*	1	1235	152	263.	1358.0	1049.7	*	1	2055	252	38.	1281.8	1049.1
1	0420	53	10122.	2138.4	1054.5	*	1	1240	153	258.	1356.4	1049.7	*	1	2100	253	37.	1281.6	1049.1
1	0425	54	11072.	2160.7	1054.6	*	1	1245	154	254.	1354.9	1049.7	*	1	2105	254	36.	1281.3	1049.1
4.58 HRS	0430	55	11561.	2172.2	1054.6	*	1	1250	155	249.	1353.3	1049.7	*	1	2110	255	36.	1281.1	1049.1
	0435	56	11725.	2176.1	1054.7	*	1	1255	156	244.	1351.8	1049.7	*	1	2115	256	35.	1280.9	1049.1
1	0440	57	11663.	2174.6	1054.6	*	1	1300	157	240.	1350.3	1049.6	*	1	2120	257	34.	1280.6	1049.1
1	0445	58	11447.	2169.5	1054.6	*	1	1305	158	236.	1348.8	1049.6	*	1	2125	258	34.	1280.4	1049.1
1	0450	59	11129.	2162.1	1054.6	*	1	1310	159	231.	1347.3	1049.6	*	1	2130	259	33.	1280.2	1049.1
1	0455	60	10739.	2152.9	1054.5	*	1	1315	160	227.	1345.9	1049.6	*	1	2135	260	32.	1279.9	1049.1
1	0500	61	10293.	2142.4	1054.5	*	1	1320	161	223.	1344.5	1049.6	*	1	2140	261	32.	1279.7	1049.1
1	0505	62	9793.	2130.6	1054.4	*	1	1325	162	219.	1343.1	1049.6	*	1	2145	262	31.	1279.5	1049.1
1	0510	63	9247.	2117.8	1054.4	*	1	1330	163	215.	1341.7	1049.6	*	1	2150	263	30.	1279.3	1049.1
1	0515	64	8693.	2104.8	1054.3	*	1	1335	164	211.	1340.4	1049.6	*	1	2155	264	30.	1279.1	1049.1
1	0520	65	8157.	2092.2	1054.2	*	1	1340	165	207.	1339.1	1049.6	*	1	2200	265	29.	1278.9	1049.1
1	0525	66	7648.	2080.2	1054.2	*	1	1345	166	203.	1337.8	1049.5	*	1	2205	266	29.	1278.7	1049.1
1	0530	67	7166.	2068.9	1054.1	*	1	1350	167	199.	1336.5	1049.5	*	1	2210	267	28.	1278.5	1049.1
1	0535	68	6710.	2058.2	1054.1	*	1	1355	168	196.	1335.2	1049.5	*	1	2215	268	28.	1278.3	1049.1
1	0540	69	6280.	2048.1	1054.0	*	1	1400	169	192.	1334.0	1049.5	*	1	2220	269	27.	1278.1	1049.1
1	0545	70	6079.	2037.9	1054.0	*	1	1405	170	188.	1332.8	1049.5	*	1	2225	270	26.	1278.0	1049.1
1	0550	71	5966.	2026.6	1053.9	*	1	1410	171	185.	1331.6	1049.5	*	1	2230	271	26.	1277.8	1049.1
1	0555	72	5839.	2013.9	1053.8	*	1	1415	172	181.	1330.4	1049.5	*	1	2235	272	25.	1277.6	1049.1
1	0600	73	5701.	2000.1	1053.7	*	1	1420	173	178.	1329.3	1049.5	*	1	2240	273	25.	1277.4	1049.1
1	0605	74	5555.	1985.5	1053.7	*	1	1425	174	175.	1328.2	1049.5	*	1	2245	274	24.	1277.3	1049.1
1	0610	75	5403.	1970.3	1053.6	*	1	1430	175	171.	1327.1	1049.5	*	1	2250	275	24.	1277.1	1049.1
1	0615	76	5247.	1954.7	1053.5	*	1	1435	176	168.	1326.0	1049.4	*	1	2255	276	23.	1276.9	1049.1
1	0620	77	5088.	1938.8	1053.4	*	1	1440	177	165.	1324.9	1049.4	*	1	2300	277	23.	1276.8	1049.1
1	0625	78	4927.	1922.7	1053.3	*	1	1445	178	162.	1323.8	1049.4	*	1	2305	278	23.	1276.6	1049.1
1	0630	79	4759.	1905.9	1053.2	*	1	1450	179	159.	1322.8	1049.4	*	1	2310	279	22.	1276.5	1049.1
1	0635	80	4578.	1887.8	1053.1	*	1	1455	180	156.	1321.8	1049.4	*	1	2315	280	22.	1276.3	1049.1
1	0640	81	4377.	1867.7	1053.0	*	1	1500	181	153.	1320.8	1049.4	*	1	2320	281	21.	1276.2	1049.1
1	0645	82	4158.	1845.8	1052.9	*	1	1505	182	150.	1319.8	1049.4	*	1	2325	282	21.	1276.0	1049.1
1	0650	83	3929.	1822.9	1052.7	*	1	1510	183	147.	1318.8	1049.4	*	1	2330	283	20.	1275.9	1049.1
1	0655	84	3702.	1800.2	1052.6	*	1	1515	184	144.	1317.9	1049.4	*	1	2335	284	20.	1275.8	1049.1
1	0700	85	3486.	1778.6	1052.5	*	1	1520	185	142.	1317.0	1049.4	*	1	2340	285	20.	1275.6	1049.1
1	0705	86	3281.	1758.1	1052.4	*	1	1525	186	139.	1316.1	1049.4	*	1	2345	286	19.	1275.5	1049.1
1	0710	87	3088.	1738.8	1052.3	*	1	1530	187	136.	1315.2	1049.4	*	1	2350	287	19.	1275.4	1049.1
1	0715	88	2907.	1720.7	1052.2	*	1	1535	188	134.	1314.3	1049.4	*	1	2355	288	18.	1275.2	1049.0
1	0720	89	2736.	1703.6	1052.1	*	1	1540	189	131.	1313.4	1049.3	*	2	0000	289	18.	1275.1	1049.0
1	0725	90	2581.	1687.5	1052.0	*	1	1545	190	129.	1312.6	1049.3	*	2	0005	290	18.	1275.0	1049.0
1	0730	91	2465.	1672.2	1051.9	*	1	1550	191	126.	1311.7	1049.3	*	2	0010	291	17.	1274.9	1049.0
1	0735	92	2354.	1657.5	1051.8	*	1	1555	192	124.	1310.9	1049.3	*	2	0015	292	17.	1274.7	1049.0
1	0740	93	2248.	1643.5	1051.7	*	1	1600	193	121.	1310.1	1049.3	*	2	0020	293	17.	1274.6	1049.0
1	0745	94	2146.	1630.1	1051.6	*	1	1605	194	119.	1309.3	1049.3	*	2	0025	294	16.	1274.5	1049.0
1	0750	95	2049.	1617.2	1051.5	*	1	1610	195	117.	1308.6	1049.3	*	2	0030	295	16.	1274.4	1049.0
1	0755	96	1956.	1604.9	1051.4	*	1	1615	196	115.	1307.8	1049.3	*	2	0035	296	16.	1274.3	1049.0
1	0800	97	1867.	1593.2	1051.3	*	1	1620	197	112.	1307.1	1049.3	*	2	0040	297	15.	1274.2	1049.0
1	0805	98	1783.	1582.0	1051.3	*	1	1625	198	110.	1306.3	1049.3	*	2	0045	298	15.	1274.1	1049.0
1	0810	99	1702.	1571.3	1051.2	*	1	1630	199	108.	1305.6	1049.3	*	2	0050	299	15.	1274.0	1049.0
1	0815	100	1624.	1561.0	1051.1	*	1	1635	200	106.	1304.9	1049.3	*	2	0055	300	14.	1273.9	1049.0

PEAK FLOW TIME MAXIMUM AVERAGE FLOW

			6-HR	24-HR	72-HR	24.92-HR
+ (CFS)	(HR)	(CFS)				
+ 11725.	4.58		4548.	1233.	1187.	1187.
		(INCHES)	2.017	2.187	2.187	2.187
		(AC-FT)	2255.	2445.	2445.	2445.

PEAK STORAGE TIME MAXIMUM AVERAGE STORAGE

+ (AC-FT)	(HR)	6-HR	24-HR	72-HR	24.92-HR
2176.	4.58	1805.	1316.	1268.	1268.

PEAK STAGE	TIME	MAXIMUM AVERAGE STAGE 6-HR	24-HR	72-HR	24.92-HR
+ (FEET)	(HR)				
1054.65	4.58	1052.56	1046.13	1044.32	1044.32

CUMULATIVE AREA = 20.96 SQ MI

1 STATION RS47

(I) INFLOW, (O) OUTFLOW

0.	4000.	8000.	12000.	16000.	20000.	24000.	0.	0.	0.	0.	0.	0.

(S) STORAGE

0.	0.	0.	0.	0.	0.	0.	1000.	2000.	3000.	0.	0.	0.

```
DAHRMN PER
 10000  1I---------.---------.---------.---------.---------.---------S---------.---------.---------.---------.---------.---------.
 10005  2I      .     .     .     .     .     S     .     .     .     .     .     .
 10010  3I      .     .     .     .     .     S     .     .     .     .     .     .
 10015  4I      .     .     .     .     .     S     .     .     .     .     .     .
 10020  5I      .     .     .     .     .     S     .     .     .     .     .     .
 10025  6I      .     .     .     .     .     S     .     .     .     .     .     .
 10030  7I      .     .     .     .     .     S     .     .     .     .     .     .
 10035  8I      .     .     .     .     .     S     .     .     .     .     .     .
 10040  9I      .     .     .     .     .     S     .     .     .     .     .     .
 10045 10I      .     .     .     .     .     S     .     .     .     .     .     .
 10050 11I.....................................S.....................................
 10055 12I      .     .     .     .     .     S     .     .     .     .     .     .
 10100 13I      .     .     .     .     .     S     .     .     .     .     .     .
 10105 14I      .     .     .     .     .     S     .     .     .     .     .     .
 10110 15I      .     .     .     .     .     S     .     .     .     .     .     .
 10115 16I      .     .     .     .     .     S     .     .     .     .     .     .
 10120 17I      .     .     .     .     .     S     .     .     .     .     .     .
 10125 18I      .     .     .     .     .     S     .     .     .     .     .     .
 10130 19I      .     .     .     .     .     S     .     .     .     .     .     .
 10135 20I      .     .     .     .     .     S     .     .     .     .     .     .
 10140 21I.....................................S.....................................
 10145 22I      .     .     .     .     .     S     .     .     .     .     .     .
 10150 23I      .     .     .     .     .     S     .     .     .     .     .     .
 10155 24I      .     .     .     .     .     S     .     .     .     .     .     .
 10200 25I      .     .     .     .     .     S     .     .     .     .     .     .
 10205 26I      .     .     .     .     .     S     .     .     .     .     .     .
 10210 27OI     .     .     .     .     .     S     .     .     .     .     .     .
 10215 28O I    .     .     .     .     .     S     .     .     .     .     .     .
 10220 29O   I  .     .     .     .     .     S     .     .     .     .     .     .
 10225 30O     I.     .     .     .     .     S     .     .     .     .     .     .
 10230 31O.....I.......................S.....................................
 10235 32O      .I    .     .     .     .     .S    .     .     .     .     .     .
 10240 33O      .  I  .     .     .     .     .S    .     .     .     .     .     .
 10245 34O      .    I.     .     .     .     . S   .     .     .     .     .     .
 10250 35O      .     .I    .     .     .     . S   .     .     .     .     .     .
 10255 36O      .     .  I  .     .     .     . S   .     .     .     .     .     .
 10300 37O      .     .    .I    .     .     . S   .     .     .     .     .     .
 10305 38O      .     .    .  I  .     .     . S   .     .     .     .     .     .
 10310 39O      .     .    .    .I    .     . S   .     .     .     .     .     .
 10315 40O      .     .    .    .  I  .     . S   .     .     .     .     .     .
 10320 41O.....................I.........S.....................................
 10325 42O      .     .    .    .    .I    .    S    .     .     .     .     .
 10330 43O      .     .    .    .    .I    .   .S    .     .     .     .     .
 10335 44O      .     .    .    .    . I   .   . S   .     .     .     .     .
 10340 45.O     .     .    .    .    .I    .   . S   .     .     .     .     .
 10345 46.  O   .     .    .    .    .I    .   . S   .     .     .     .     .
 10350 47.   O  .     .    .    .    I     .   .  S  .     .     .     .     .
 10355 48.     O.     .    .    .   I.     .   .  S  .     .     .     .     .
 10400 49.     .O     .    .    .  I .     .   .  S. .     .     .     .     .
 10405 50.     . O    .    .    . I  .     .   .   S  .     .     .     .     .
 10410 51........O.............I.....................S.....................
 10415 52.     .    .O    .    I.     .     .     .   .S    .     .     .     .
 10420 53.     .    . O   .   I .     .     .     .   .S    .     .     .     .
```

```
10425 54.      .     .    O . I    .     .     .     .     .S    .     .     .     .
10430 55.      .     .     O.I     .     .     .     .     .S    .     .     .     .
10435 56.      .     .     OI      .     .     .     .     .S    .     .     .     .
10440 57.      .     .    IO.      .     .     .     .     .S    .     .     .     .
10445 58.      .     .   I O.      .     .     .     .     .S    .     .     .     .
10450 59.      .     .  I O .      .     .     .     .     .S    .     .     .     .
10455 60.      .     . I  O .      .     .     .     .     .S    .     .     .     .
10500 61.............I.O.............................S.....................
10505 62.      .     I  O  .      .     .     .     .     .S    .     .     .     .
10510 63.      .    I. O   .      .     .     .     .     .S    .     .     .     .
10515 64.      .   I .O    .      .     .     .     .     .S    .     .     .     .
10520 65.      .  I  O     .      .     .     .     .     .S    .     .     .     .
10525 66.      . I  O.     .      .     .     .     .     .S    .     .     .     .
10530 67.      . I  O .    .      .     .     .     .     .S    .     .     .     .
10535 68.      .I  O  .    .      .     .     .     .     .S    .     .     .     .
10540 69.      .I  O  .    .      .     .     .     .     S     .     .     .     .
10545 70.      .I  O  .    .      .     .     .     .     S     .     .     .     .
10550 71......I..O.................................S.....................
10555 72.      I  O  .     .      .     .     .     .     S     .     .     .     .
10600 73.     I.  O  .     .      .     .     .     .     S     .     .     .     .
10605 74.    I .  O  .     .      .     .     .     .     S     .     .     .     .
10610 75.    I .  O  .     .      .     .     .     .     S     .     .     .     .
10615 76.   I . O    .     .      .     .     .     .     S     .     .     .     .
10620 77.   I . O    .     .      .     .     .     .     S.    .     .     .     .
10625 78.  I  .O     .     .      .     .     .     .     S.    .     .     .     .
10630 79.  I  .O     .     .      .     .     .     .     S.    .     .     .     .
10635 80. I   .O     .     .      .     .     .     .     S.    .     .     .     .
10640 81..I....O..................................S.....................
10645 82.I    O      .     .      .     .     .     .     S.    .     .     .     .
10650 83.I    O      .     .      .     .     .     .     S.    .     .     .     .
10655 84.I   O.      .     .      .     .     .     .     S.    .     .     .     .
10700 85.I   O.      .     .      .     .     .     .     S.    .     .     .     .
10705 86.I  O.       .     .      .     .     .     .     S.    .     .     .     .
10710 87.I  O.       .     .      .     .     .     .     S.    .     .     .     .
10715 88.I O.        .     .      .     .     .     .     S.    .     .     .     .
10720 89.I O.        .     .      .     .     .     .     S.    .     .     .     .
10725 90.I O.        .     .      .     .     .     .     S.    .     .     .     .
10730 91.I..O.....................................S.....................
10735 92.I O.        .     .      .     .     .     .     S.    .     .     .     .
10740 93.I O.        .     .      .     .     .     .     S     .     .     .     .
10745 94.I O         .     .      .     .     .     .     S     .     .     .     .
10750 95.I O         .     .      .     .     .     .     S     .     .     .     .
10755 96.I O         .     .      .     .     .     .     S     .     .     .     .
10800 97.I O         .     .      .     .     .     .     S     .     .     .     .
10805 98I O          .     .      .     .     .     .     S     .     .     .     .
10810 99I O          .     .      .     .     .     .     S     .     .     .     .
10815 100I O         .     .      .     .     .     .     S     .     .     .     .
10820 101I.O.....................................S.....................
10825 102I O         .     .      .     .     .     .     S     .     .     .     .
10830 103I O         .     .      .     .     .     .     S     .     .     .     .
10835 104I O         .     .      .     .     .     .     S     .     .     .     .
10840 105I O         .     .      .     .     .     .     S     .     .     .     .
10845 106I O         .     .      .     .     .     .     S     .     .     .     .
10850 107I O         .     .      .     .     .     .     S     .     .     .     .
10855 108I O         .     .      .     .     .     .     S     .     .     .     .
10900 109I O         .     .      .     .     .     .     S     .     .     .     .
10905 110I O         .     .      .     .     .     .     S     .     .     .     .
10910 111I O.....................................S.....................
10915 112I O         .     .      .     .     .     .     S     .     .     .     .
10920 113I O         .     .      .     .     .     .     S     .     .     .     .
10925 114I O         .     .      .     .     .     .     S     .     .     .     .
10930 115I O         .     .      .     .     .     .     S     .     .     .     .
10935 116I O         .     .      .     .     .     .     S     .     .     .     .
10940 117I O         .     .      .     .     .     .     S     .     .     .     .
10945 118I O         .     .      .     .     .     .     S     .     .     .     .
10950 119I O         .     .      .     .     .     .     S     .     .     .     .
10955 120I O         .     .      .     .     .     .     S     .     .     .     .
11000 121I O.....................................S.....................
11005 122IO          .     .      .     .     .     .     S     .     .     .     .
11010 123IO          .     .      .     .     .     .     S     .     .     .     .
11015 124IO          .     .      .     .     .     .     S     .     .     .     .
```

```
11020 1251O   .  .  .  .  .  .  .  S  .  .  .  .  .
11025 1261O   .  .  .  .  .  .  .  S  .  .  .  .  .
11030 1271O   .  .  .  .  .  .  .  S  .  .  .  .  .
11035 1281O   .  .  .  .  .  .  .  S  .  .  .  .  .
11040 1291O   .  .  .  .  .  .  .  S  .  .  .  .  .
11045 1301O   .  .  .  .  .  .  .  S  .  .  .  .  .
11050 1311O...................................S.......................
11055 1321O   .  .  .  .  .  .  .  S  .  .  .  .  .
11100 1331O   .  .  .  .  .  .  .  S  .  .  .  .  .
11105 1341O   .  .  .  .  .  .  .  S  .  .  .  .  .
11110 1351O   .  .  .  .  .  .  .  S  .  .  .  .  .
11115 1361O   .  .  .  .  .  .  .  S  .  .  .  .  .
11120 1371O   .  .  .  .  .  .  .  S  .  .  .  .  .
11125 1381O   .  .  .  .  .  .  .  S  .  .  .  .  .
11130 1391O   .  .  .  .  .  .  .  S  .  .  .  .  .
11135 1401O   .  .  .  .  .  .  .  S  .  .  .  .  .
11140 1411O...................................S.......................
11145 1421O   .  .  .  .  .  .  .  S  .  .  .  .  .
11150 1431O   .  .  .  .  .  .  .  S  .  .  .  .  .
11155 1441O   .  .  .  .  .  .  .  S  .  .  .  .  .
11200 1451O   .  .  .  .  .  .  .  S  .  .  .  .  .
11205 1461O   .  .  .  .  .  .  .  S  .  .  .  .  .
11210 1471O   .  .  .  .  .  .  .  S  .  .  .  .  .
11215 1481O   .  .  .  .  .  .  .  S  .  .  .  .  .
11220 1491O   .  .  .  .  .  .  .  S  .  .  .  .  .
11225 1501O   .  .  .  .  .  .  .  S  .  .  .  .  .
11230 1511O...................................S.......................
11235 1521O   .  .  .  .  .  .  .  S  .  .  .  .  .
11240 1531O   .  .  .  .  .  .  .  S  .  .  .  .  .
11245 1541O   .  .  .  .  .  .  .  S  .  .  .  .  .
11250 1551O   .  .  .  .  .  .  .  S  .  .  .  .  .
11255 1561O   .  .  .  .  .  .  .  S  .  .  .  .  .
11300 1571O   .  .  .  .  .  .  .  S  .  .  .  .  .
11305 1581O   .  .  .  .  .  .  .  S  .  .  .  .  .
11310 1591O   .  .  .  .  .  .  .  S  .  .  .  .  .
11315 1601O   .  .  .  .  .  .  .  S  .  .  .  .  .
11320 1611O...................................S.......................
11325 1621O   .  .  .  .  .  .  .  S  .  .  .  .  .
11330 1631O   .  .  .  .  .  .  .  S  .  .  .  .  .
11335 1641O   .  .  .  .  .  .  .  S  .  .  .  .  .
11340 1651O   .  .  .  .  .  .  .  S  .  .  .  .  .
11345 1661O   .  .  .  .  .  .  .  S  .  .  .  .  .
11350 1671    .  .  .  .  .  .  .  S  .  .  .  .  .
11355 1681    .  .  .  .  .  .  .  S  .  .  .  .  .
11400 1691    .  .  .  .  .  .  .  S  .  .  .  .  .
11405 1701    .  .  .  .  .  .  .  S  .  .  .  .  .
11410 1711....................................S.......................
11415 1721    .  .  .  .  .  .  .  S  .  .  .  .  .
11420 1731    .  .  .  .  .  .  .  S  .  .  .  .  .
11425 1741    .  .  .  .  .  .  .  S  .  .  .  .  .
11430 1751    .  .  .  .  .  .  .  S  .  .  .  .  .
11435 1761    .  .  .  .  .  .  .  S  .  .  .  .  .
11440 1771    .  .  .  .  .  .  .  S  .  .  .  .  .
11445 1781    .  .  .  .  .  .  .  S  .  .  .  .  .
11450 1791    .  .  .  .  .  .  .  S  .  .  .  .  .
11455 1801    .  .  .  .  .  .  .  S  .  .  .  .  .
11500 1811....................................S.......................
11505 1821    .  .  .  .  .  .  .  S  .  .  .  .  .
11510 1831    .  .  .  .  .  .  .  S  .  .  .  .  .
11515 1841    .  .  .  .  .  .  .  S  .  .  .  .  .
11520 1851    .  .  .  .  .  .  .  S  .  .  .  .  .
11525 1861    .  .  .  .  .  .  .  S  .  .  .  .  .
11530 1871    .  .  .  .  .  .  .  S  .  .  .  .  .
11535 1881    .  .  .  .  .  .  .  S  .  .  .  .  .
11540 1891    .  .  .  .  .  .  .  S  .  .  .  .  .
11545 1901    .  .  .  .  .  .  .  S  .  .  .  .  .
11550 1911....................................S.......................
11555 1921    .  .  .  .  .  .  .  S  .  .  .  .  .
11600 1931    .  .  .  .  .  .  .  S  .  .  .  .  .
11605 1941    .  .  .  .  .  .  .  S  .  .  .  .  .
11610 1951    .  .  .  .  .  .  .  S  .  .  .  .  .
```

```
11615 196I  .  .  .  .  .  .  . S  .  .  .  .  .
11620 197I  .  .  .  .  .  .  . S  .  .  .  .  .
11625 198I  .  .  .  .  .  .  . S  .  .  .  .  .
11630 199I  .  .  .  .  .  .  . S  .  .  .  .  .
11635 200I  .  .  .  .  .  .  . S  .  .  .  .  .
11640 201I..............................S.......................
11645 202I  .  .  .  .  .  .  . S  .  .  .  .  .
11650 203I  .  .  .  .  .  .  . S  .  .  .  .  .
11655 204I  .  .  .  .  .  .  . S  .  .  .  .  .
11700 205I  .  .  .  .  .  .  . S  .  .  .  .  .
11705 206I  .  .  .  .  .  .  . S  .  .  .  .  .
11710 207I  .  .  .  .  .  .  . S  .  .  .  .  .
11715 208I  .  .  .  .  .  .  . S  .  .  .  .  .
11720 209I  .  .  .  .  .  .  . S  .  .  .  .  .
11725 210I  .  .  .  .  .  .  . S  .  .  .  .  .
11730 211I..............................S.......................
11735 212I  .  .  .  .  .  .  . S  .  .  .  .  .
11740 213I  .  .  .  .  .  .  . S  .  .  .  .  .
11745 214I  .  .  .  .  .  .  . S  .  .  .  .  .
11750 215I  .  .  .  .  .  .  . S  .  .  .  .  .
11755 216I  .  .  .  .  .  .  . S  .  .  .  .  .
11800 217I  .  .  .  .  .  .  . S  .  .  .  .  .
11805 218I  .  .  .  .  .  .  . S  .  .  .  .  .
11810 219I  .  .  .  .  .  .  . S  .  .  .  .  .
11815 220I  .  .  .  .  .  .  . S  .  .  .  .  .
11820 221I..............................S.......................
11825 222I  .  .  .  .  .  .  . S  .  .  .  .  .
11830 223I  .  .  .  .  .  .  . S  .  .  .  .  .
11835 224I  .  .  .  .  .  .  . S  .  .  .  .  .
11840 225I  .  .  .  .  .  .  . S  .  .  .  .  .
11845 226I  .  .  .  .  .  .  . S  .  .  .  .  .
11850 227I  .  .  .  .  .  .  . S  .  .  .  .  .
11855 228I  .  .  .  .  .  .  . S  .  .  .  .  .
11900 229I  .  .  .  .  .  .  . S  .  .  .  .  .
11905 230I  .  .  .  .  .  .  . S  .  .  .  .  .
11910 231I..............................S.......................
11915 232I  .  .  .  .  .  .  . S  .  .  .  .  .
11920 233I  .  .  .  .  .  .  . S  .  .  .  .  .
11925 234I  .  .  .  .  .  .  . S  .  .  .  .  .
11930 235I  .  .  .  .  .  .  . S  .  .  .  .  .
11935 236I  .  .  .  .  .  .  . S  .  .  .  .  .
11940 237I  .  .  .  .  .  .  . S  .  .  .  .  .
11945 238I  .  .  .  .  .  .  . S  .  .  .  .  .
11950 239I  .  .  .  .  .  .  . S  .  .  .  .  .
11955 240I  .  .  .  .  .  .  . S  .  .  .  .  .
12000 241I..............................S.......................
12005 242I  .  .  .  .  .  .  . S  .  .  .  .  .
12010 243I  .  .  .  .  .  .  . S  .  .  .  .  .
12015 244I  .  .  .  .  .  .  . S  .  .  .  .  .
12020 245I  .  .  .  .  .  .  . S  .  .  .  .  .
12025 246I  .  .  .  .  .  .  . S  .  .  .  .  .
12030 247I  .  .  .  .  .  .  . S  .  .  .  .  .
12035 248I  .  .  .  .  .  .  . S  .  .  .  .  .
12040 249I  .  .  .  .  .  .  . S  .  .  .  .  .
12045 250I  .  .  .  .  .  .  . S  .  .  .  .  .
12050 251I..............................S.......................
12055 252I  .  .  .  .  .  .  . S  .  .  .  .  .
12100 253I  .  .  .  .  .  .  . S  .  .  .  .  .
12105 254I  .  .  .  .  .  .  . S  .  .  .  .  .
12110 255I  .  .  .  .  .  .  . S  .  .  .  .  .
12115 256I  .  .  .  .  .  .  . S  .  .  .  .  .
12120 257I  .  .  .  .  .  .  . S  .  .  .  .  .
12125 258I  .  .  .  .  .  .  . S  .  .  .  .  .
12130 259I  .  .  .  .  .  .  . S  .  .  .  .  .
12135 260I  .  .  .  .  .  .  . S  .  .  .  .  .
12140 261I..............................S.......................
12145 262I  .  .  .  .  .  .  . S  .  .  .  .  .
12150 263I  .  .  .  .  .  .  . S  .  .  .  .  .
12155 264I  .  .  .  .  .  .  . S  .  .  .  .  .
12200 265I  .  .  .  .  .  .  . S  .  .  .  .  .
12205 266I  .  .  .  .  .  .  . S  .  .  .  .  .
```

```
12210 267I     .     .     .     .     .     .     .S    .     .     .     .     .
12215 268I     .     .     .     .     .     .     .S    .     .     .     .     .
12220 269I     .     .     .     .     .     .     .S    .     .     .     .     .
12225 270I     .     .     .     .     .     .     .S    .     .     .     .     .
12230 271I.....................................S.......................
12235 272I     .     .     .     .     .     .     .S    .     .     .     .     .
12240 273I     .     .     .     .     .     .     .S    .     .     .     .     .
12245 274I     .     .     .     .     .     .     .S    .     .     .     .     .
12250 275I     .     .     .     .     .     .     .S    .     .     .     .     .
12255 276I     .     .     .     .     .     .     .S    .     .     .     .     .
12300 277I     .     .     .     .     .     .     .S    .     .     .     .     .
12305 278I     .     .     .     .     .     .     .S    .     .     .     .     .
12310 279I     .     .     .     .     .     .     .S    .     .     .     .     .
12315 280I     .     .     .     .     .     .     .S    .     .     .     .     .
12320 281I.....................................S.......................
12325 282I     .     .     .     .     .     .     .S    .     .     .     .     .
12330 283I     .     .     .     .     .     .     .S    .     .     .     .     .
12335 284I     .     .     .     .     .     .     .S    .     .     .     .     .
12340 285I     .     .     .     .     .     .     .S    .     .     .     .     .
12345 286I     .     .     .     .     .     .     .S    .     .     .     .     .
12350 287I     .     .     .     .     .     .     .S    .     .     .     .     .
12355 288I     .     .     .     .     .     .     .S    .     .     .     .     .
20000 289I     .     .     .     .     .     .     .S    .     .     .     .     .
20005 290I     .     .     .     .     .     .     .S    .     .     .     .     .
20010 291I.....................................S.......................
20015 292I     .     .     .     .     .     .     .S    .     .     .     .     .
20020 293I     .     .     .     .     .     .     .S    .     .     .     .     .
20025 294I     .     .     .     .     .     .     .S    .     .     .     .     .
20030 295I     .     .     .     .     .     .     .S    .     .     .     .     .
20035 296I     .     .     .     .     .     .     .S    .     .     .     .     .
20040 297I     .     .     .     .     .     .     .S    .     .     .     .     .
20045 298I     .     .     .     .     .     .     .S    .     .     .     .     .
20050 299I     .     .     .     .     .     .     .S    .     .     .     .     .
20055 300I---------.---------.---------.---------.---------.---------.---------S---------.---------.---------.---------.---------.
1
1
```

RUNOFF SUMMARY
FLOW IN CUBIC FEET PER SECOND
TIME IN HOURS, AREA IN SQUARE MILES

	OPERATION	STATION	PEAK FLOW	TIME OF PEAK	AVERAGE FLOW FOR MAXIMUM PERIOD 6-HOUR	24-HOUR	72-HOUR	BASIN AREA	MAXIMUM STAGE	TIME OF MAX STAGE
+	HYDROGRAPH AT	18	6940.	2.42	633.	158.	152.	.81		
+	ROUTED TO	R18	6361.	2.58	632.	158.	152.	.81		
+								1515.60	2.58	
+	HYDROGRAPH AT	19	4894.	2.67	625.	156.	151.	.79		
+	2 COMBINED AT	CP19	10925.	2.58	1257.	315.	303.	1.60		
+	ROUTED TO	R19	10643.	2.67	1256.	315.	303.	1.60		
+								1467.31	2.67	
+	HYDROGRAPH AT	21	4984.	2.67	663.	166.	160.	.79		
+	2 COMBINED AT	11CP21	15627.	2.67	1918.	480.	463.	2.39		
+	HYDROGRAPH AT	20	6803.	2.67	852.	213.	205.	1.07		
	ROUTED TO									

```
+                SR20    3355.  3.00     497.     124.     120.    1.07
+                                                          1474.49     3.00

     ROUTED TO
+                R20     3267.  3.17     496.     124.     120.    1.07
+                                                          1424.02     3.17

     2 COMBINED AT
+               CP21    15627.  2.67    2411.     605.     582.    3.46

     ROUTED TO
+               SR21    11494.  2.92    2223.     556.     536.    3.46
+                                                          1366.24     2.92

     ROUTED TO
+                R21    11460.  2.92    2223.     556.     536.    3.46
+                                                          1306.48     2.92

     HYDROGRAPH AT
+                 23     1788.  2.33     142.      36.      34.     .16

     2 COMBINED AT
+               CP23    11676.  2.92    2362.     592.     570.    3.62

     ROUTED TO
+               SR23     6569.  3.58    1064.     266.     257.    3.62
+                                                          1307.41     3.58

     ROUTED TO
+                R23     5738.  3.92    1061.     266.     257.    3.62
+                                                          1406.84     3.92

     HYDROGRAPH AT
+                 22     4093.  2.58     451.     113.     109.     .57

     ROUTED TO
+                R22     3970.  2.67     451.     113.     109.     .57
+                                                          1292.12     2.67

     HYDROGRAPH AT
+                22A     4076.  2.50     503.     126.     121.     .50

     2 COMBINED AT
+              11C22A    7780.  2.58     954.     239.     230.    1.07

     2 COMBINED AT
+               CP22A    7780.  2.58    2002.     505.     486.    4.69

     ROUTED TO
+               R22A     6947.  2.83    1999.     505.     486.    4.69
+                                                          1256.75     2.83

     HYDROGRAPH AT
+                 25     3119.  2.67     413.     103.      99.     .46

     2 COMBINED AT
+              11CP25    9503.  2.75    2410.     608.     586.    5.15

     HYDROGRAPH AT
+                 24     1153.  2.50     138.      34.      33.     .14

     ROUTED TO
+                SR24       0.   .08       0.       0.       0.     .14
+                                                          1227.44     6.00

     ROUTED TO
+                 R24       0.   .08       0.       0.       0.     .14
+                                                          1228.00      .00

     2 COMBINED AT
+               CP25    9503.  2.75    2410.     608.     586.    5.29
```

OT Top Dam
1397

```
      ROUTED TO
+                SR25    9364.  2.83     2382.     602.     579.     5.29
+                                                          1222.60     2.83

      HYDROGRAPH AT
+                 26     6529.  2.75      999.     250.     241.     1.16

      ROUTED TO
+                 R26    6479.  2.83      999.     250.     241.     1.16
+                                                          1247.10     2.83

      HYDROGRAPH AT
+                 27     6193.  2.67      902.     226.     217.     1.00

      2 COMBINED AT
+               11CP27   12009.  2.75     1901.     475.     458.     2.16

      ROUTED TO
+                SR27   12037.  2.83     1878.     470.     452.     2.16
+                                                          1219.75     2.83

      2 COMBINED AT
+                CP27   21401.  2.83     4260.    1071.    1032.     7.45

      ROUTED TO
+                 R27   20950.  2.92     4252.    1071.    1032.     7.45
+                                                          1212.45     2.92

      HYDROGRAPH AT
+                 34     2801.  2.50      281.      70.      68.      .36

      HYDROGRAPH AT
+                 33     4969.  2.50      509.     127.     123.      .65

      2 COMBINED AT
+                CP33     7770.  2.50      789.     198.     190.     1.01

      ROUTED TO
+                 R33    7634.  2.58      789.     198.     190.     1.01
+                                                          1695.85     2.58

      HYDROGRAPH AT
+                 35     3129.  2.50      305.      76.      74.      .39

      2 COMBINED AT
+               11CP35   10552.  2.50     1095.     274.     264.     1.40

      HYDROGRAPH AT
+                 32     7573.  2.67     1007.     252.     243.     1.29

      2 COMBINED AT
+                CP35   17167.  2.58     2102.     526.     507.     2.69

      ROUTED TO
+                 R35   16688.  2.67     2101.     526.     507.     2.69
+                                                          1438.45     2.67

      HYDROGRAPH AT
+                 36     1711.  2.50      167.      42.      40.      .24

      2 COMBINED AT
+               11CP36   18070.  2.67     2269.     568.     547.     2.93

      HYDROGRAPH AT
+                 37     5410.  2.75      749.     187.     181.      .95

      2 COMBINED AT
+                CP36   23300.  2.67     3018.     755.     728.     3.88

      ROUTED TO
+                 R36   22950.  2.75     3017.     755.     728.     3.88
```

```
+                                                                    1347.13      2.75

     HYDROGRAPH AT
+                 38    5508.   2.58      603.      151.      145.      .76

     2 COMBINED AT
+                CP38   26779.   2.75     3620.      906.      873.     4.64

     ROUTED TO
+                SR38   26813.   2.75     3544.      886.      854.     4.64
+                                                                    1305.68      2.75

     ROUTED TO
+                 R38   26540.   2.83     3542.      886.      854.     4.64
+                                                                    1211.38      2.83

     HYDROGRAPH AT
+                 39    4135.   2.83      661.      165.      159.      .77

     2 COMBINED AT
+               11CP39  30675.   2.83     4202.     1052.     1013.     5.41

     2 COMBINED AT
+                CP39   50571.   2.83     8449.     2123.     2045.    12.86

     ROUTED TO
+                 R39   50211.   2.92     8446.     2123.     2045.    12.86
+                                                                    1154.26      2.92

     HYDROGRAPH AT
+                 40    3834.   2.58      427.      107.      103.      .52

     ROUTED TO
+                 R40    3524.   2.75      427.      107.      103.      .52
+                                                                    1113.90      2.75

     HYDROGRAPH AT
+                 42    6504.   2.83     1078.      269.      260.     1.18

     2 COMBINED AT
+               11CP42   9820.   2.75     1504.      376.      362.     1.70

     2 COMBINED AT
+                CP42   58961.   2.92     9944.     2499.     2407.    14.56

     ROUTED TO
+                SR42   58815.   2.92     9799.     2464.     2373.    14.56
+                                                                    1114.22      2.92

     ROUTED TO
+                 R42   58496.   2.92     9798.     2464.     2373.    14.56
+                                                                    1099.09      2.92

     HYDROGRAPH AT
+               41A1     261.   2.25       20.        5.        5.      .02

     ROUTED TO
+              SR41A1    258.   2.33       20.        5.        5.      .02
+                                                                    1139.35      2.33

     DIVERSION TO
+               1D303     34.   2.33       11.        3.        3.      .02

     HYDROGRAPH AT
+              CP41A1    225.   2.33        8.        2.        2.      .02

     ROUTED TO
+              R41A1     186.   2.33        8.        2.        2.      .02
+                                                                    1141.83      2.33

     HYDROGRAPH AT
```

```
+                41A2    372.  2.25     26.     6.     6.    .03

     2 COMBINED AT
+               CP41A2   517.  2.33     34.     8.     8.    .05

     ROUTED TO
+               SR41A2   515.  2.33     34.     8.     8.    .05
+                                                   1137.02    2.33

     DIVERSION TO
+                2D303    29.  2.33      7.     2.     2.    .05

     HYDROGRAPH AT
+               CP41A2   486.  2.33     26.     7.     6.    .05

     ROUTED TO
+                R41A2   454.  2.33     26.     7.     6.    .05
+                                                   1135.26    2.33

     HYDROGRAPH AT
+                41A3    373.  2.25     30.     7.     7.    .03

     2 COMBINED AT
+               CP41A3   803.  2.33     56.    14.    13.    .08

     ROUTED TO
+               SR41A3   710.  2.42     56.    14.    13.    .08
+                                                   1134.75    2.42

     DIVERSION TO
+                3D303    34.  2.42     16.     4.     4.    .08

     HYDROGRAPH AT
+               CP41A3   676.  2.42     40.    10.    10.    .08

     ROUTED TO
+                R41A3   707.  2.42     40.    10.    10.    .08
+                                                   1130.52    2.42

     HYDROGRAPH AT
+                 41A    567.  2.33     44.    11.    11.    .05

     2 COMBINED AT
+                CP41A  1128.  2.42     84.    21.    20.    .13

     ROUTED TO
+                SR41A  1143.  2.42     84.    21.    20.    .13
+                                                   1129.27    2.42

     DIVERSION TO
+                4D303    50.  2.42     19.     5.     5.    .13

     HYDROGRAPH AT
+                CP41A  1093.  2.42     65.    16.    16.    .13

     ROUTED TO
+                 R41A   955.  2.50     65.    16.    16.    .13
+                                                   1117.74    2.50

     HYDROGRAPH AT
+                 41-1  1375.  2.42    127.    32.    31.    .15

     2 COMBINED AT
+                CP41-1 2214.  2.50    192.    48.    46.    .28

     ROUTED TO
+                SR41-1 2358.  2.50    192.    48.    46.    .28
+                                                   1117.51    2.50

     DIVERSION TO
+                5D303    52.  2.50     25.     6.     6.    .28
```

```
      HYDROGRAPH AT
+              CP41-1    2306.  2.50     168.     42.     40.     .28

      ROUTED TO
+              R41-1     1949.  2.58     168.     42.     40.     .28
+                                                        1102.51     2.58

      HYDROGRAPH AT
+               41-2      928.  2.42      85.     21.     21.     .10

      2 COMBINED AT
+              CP41-2    2727.  2.50     253.     63.     61.     .38

      ROUTED TO
+              SR41-2    2642.  2.58     251.     63.     61.     .38
+                                                        1105.22     2.58

      DIVERSION TO
+               6D303      70.  2.58      44.     11.     11.     .38

      HYDROGRAPH AT
+              CP41-2    2571.  2.58     207.     52.     50.     .38

      ROUTED TO
+              R41-2     2665.  2.58     207.     52.     50.     .38
+                                                        1099.18     2.58

      HYDROGRAPH AT
+                 41     3540.  2.75     528.    132.    127.     .58

      2 COMBINED AT
+               CP41     5809.  2.67     735.    184.    177.     .96

      ROUTED TO
+               SR41     5597.  2.75     733.    184.    177.     .96
+                                                        1103.81     2.75

      DIVERSION TO
+               7D303      71.  2.75      41.     11.     10.     .96

      HYDROGRAPH AT
+               CP41     5526.  2.75     692.    173.    167.     .96

      ROUTED TO
+                R41     5571.  2.75     692.    173.    167.     .96
+                                                        1098.35     2.75

      HYDROGRAPH AT
+               43-1      446.  2.33      37.      9.      9.     .04

      2 COMBINED AT
+              CP43-1    5660.  2.75     729.    182.    176.    1.00

      ROUTED TO
+              SR43-1    4807.  2.92     729.    182.    176.    1.00
+                                                        1100.37     2.92

      DIVERSION TO
+              1D303A     680.  2.92     209.     52.     50.    1.00

      HYDROGRAPH AT
+              CP43-1    4127.  2.92     520.    130.    125.    1.00

      ROUTED TO
+               R43-1    4129.  2.92     520.    130.    125.    1.00
+                                                        1095.68     2.92

      HYDROGRAPH AT
+               43-2      115.  2.33       9.      2.      2.     .01

      2 COMBINED AT
```

```
+              CP43-2    4143.   2.92      529.      132.      127.      1.01

     ROUTED TO
+              SR43-2    3814.   3.00      529.      132.      127.      1.01
+                                                                1107.77      3.00

     DIVERSION TO
+              2D303A     158.   3.00       39.       10.        9.      1.01

     HYDROGRAPH AT
+              CP43-2    3656.   3.00      490.      123.      118.      1.01

     ROUTED TO
+               R43-2    3644.   3.08      490.      123.      118.      1.01
+                                                                1097.19      3.08

     HYDROGRAPH AT
+               43-3     617.   2.25       45.       11.       11.       .05

     2 COMBINED AT
+              CP43-3    3702.   3.08      536.      134.      129.      1.06

     ROUTED TO
+              SR43-3    2947.   3.33      534.      134.      129.      1.06
+                                                                1101.97      3.33

     DIVERSION TO
+              3D303A     206.   3.33       85.       22.       21.      1.06

     HYDROGRAPH AT
+              CP43-3    2741.   3.33      449.      112.      108.      1.06

     ROUTED TO
+               R43-3    2739.   3.33      449.      112.      108.      1.06
+                                                                1095.88      3.33

     HYDROGRAPH AT
+               43-4     372.   2.25       27.        7.        7.       .03

     2 COMBINED AT
+              CP43-4    2755.   3.33      476.      119.      115.      1.09

     ROUTED TO
+              SR43-4    2619.   3.50      476.      119.      115.      1.09
+                                                                1101.42      3.50

     DIVERSION TO
+              DI43-4     131.   3.50       51.       13.       12.      1.09

     HYDROGRAPH AT
+              CP43-4    2488.   3.50      425.      106.      102.      1.09

     ROUTED TO
+               R43-4    2490.   3.50      425.      106.      102.      1.09
+                                                                1095.75      3.50

     HYDROGRAPH AT
+               43-5     248.   2.25       18.        5.        4.       .02

     2 COMBINED AT
+              CP43-5    2502.   3.50      444.      111.      107.      1.11

     ROUTED TO
+              SR43-5    2435.   3.58      444.      111.      107.      1.11
+                                                                1101.63      3.58

     DIVERSION TO
+              DI43-5      78.   3.58       35.        9.        9.      1.11

     HYDROGRAPH AT
+              CP43-5    2357.   3.58      408.      102.       98.      1.11
```

```
      ROUTED TO
+                R43-5    2353.   3.58      408.      102.      98.     1.11
+                                                                   1095.15     3.58

      HYDROGRAPH AT
+                 43-6     257.   2.25       19.        5.       4.      .02

      2 COMBINED AT
+               CP43-6    2364.   3.58      427.      107.     103.     1.13

      ROUTED TO
+               SR43-6    2366.   3.58      384.      107.     103.     1.13
+                                                                   1097.73     3.58

      DIVERSION TO
+               DI43-6      63.   3.58       56.       25.      24.     1.13

      HYDROGRAPH AT
+               CP43-6    2303.   3.58      328.       82.      79.     1.13

      ROUTED TO
+                R43-6    2355.   3.67      328.       82.      79.     1.13
+                                                                   1092.92     3.67

      HYDROGRAPH AT
+                 43-7     262.   2.25       18.        5.       4.      .02

      2 COMBINED AT
+               CP43-7    2367.   3.67      347.       87.      83.     1.15

      ROUTED TO
+               SR43-7    2283.   3.75      347.       87.      83.     1.15
+                                                                   1096.55     3.75

      DIVERSION TO
+               DI43-7      46.   3.75       28.        7.       7.     1.15

      HYDROGRAPH AT
+               CP43-7    2237.   3.75      319.       80.      77.     1.15

      ROUTED TO
+                R43-7    2259.   3.75      319.       80.      77.     1.15
+                                                                   1092.30     3.75

      HYDROGRAPH AT
+                 43-8     132.   2.25        9.        2.       2.      .01

      2 COMBINED AT
+               CP43-8    2265.   3.75      328.       82.      79.     1.16

      ROUTED TO
+               SR43-8    2041.   3.92      328.       82.      79.     1.16
+                                                                   1097.21     3.92

      DIVERSION TO
+               DI43-8     108.   3.92       42.       10.      10.     1.16

      HYDROGRAPH AT
+               CP43-8    1933.   3.92      286.       71.      69.     1.16

      ROUTED TO
+                R43-8    1932.   3.92      286.       71.      69.     1.16
+                                                                   1091.14     3.92

      HYDROGRAPH AT
+                  43      132.   2.25        9.        2.       2.      .01

      2 COMBINED AT
+               11CP43    1938.   3.92      295.       74.      71.     1.17

      2 COMBINED AT
```

```
+                CP43   58510.  2.92    10087.    2538.    2444.    15.73

     ROUTED TO
+                SR43   27103.  3.42    10087.    2538.    2444.    15.73
+                                                        1166.15     3.42

     DIVERSION TO
+                DI43       0.  3.42        0.       0.       0.    15.73

     HYDROGRAPH AT
+                CP43   27103.  3.42    10087.    2538.    2444.    15.73

     ROUTED TO
+                RD43   27013.  3.50    10083.    2538.    2444.    15.73
+                                                        1075.49     3.50

     HYDROGRAPH AT
+              CP43-4     131.  3.50       51.      13.      12.      .00

     ROUTED TO
+              RD43-4     127.  3.75       50.      13.      12.      .00
+                                                        1061.40     3.75

     HYDROGRAPH AT
+              CP43-5      78.  3.58       35.       9.       9.      .00

     ROUTED TO
+              RD43-5      75.  3.83       35.       9.       9.      .00
+                                                        1061.10     3.83

     2 COMBINED AT
+              I1CWT4     201.  3.75       86.      22.      21.      .00

     HYDROGRAPH AT
+              CP43-6      63.  3.58       56.      25.      24.      .00

     ROUTED TO
+              RD43-6      63.  4.08       56.      25.      24.      .00
+                                                        1061.00     4.08

     2 COMBINED AT
+              I2CWT4     262.  3.83      137.      46.      44.      .00

     HYDROGRAPH AT
+              CP43-7      46.  3.75       28.       7.       7.      .00

     ROUTED TO
+              RD43-7      44.  4.17       28.       7.       7.      .00
+                                                        1060.85     4.17

     2 COMBINED AT
+              I3CWT4     304.  3.83      165.      53.      51.      .00

     HYDROGRAPH AT
+              CP43-8     108.  3.92       42.      10.      10.      .00

     ROUTED TO
+              RD43-8      99.  4.17       41.      10.      10.      .00
+                                                        1061.25     4.17

     2 COMBINED AT
+              I4CWT4     389.  4.08      206.      64.      61.      .00

     HYDROGRAPH AT
+                  44    1784.  2.50      206.      51.      50.      .22

     2 COMBINED AT
+              I5CWT4    1878.  2.50      409.     115.     111.      .22

     2 COMBINED AT
+              I6CWT4   27494.  3.50    10480.    2653.    2555.    15.95
```

```
      HYDROGRAPH AT
+                45-1    804.  2.42     75.     19.     18.     .08

      HYDROGRAPH AT
+                CP43      0.  .08       0.      0.      0.     .00

      2 COMBINED AT
+                CP45-1   804.  2.42     75.     19.     18.     .08

      ROUTED TO
+                SR45-1   796.  2.42     75.     19.     18.     .08
+                                                        1086.86     2.42

      DIVERSION TO
+                DI45-1   247.  2.42     45.     11.     11.     .08

      HYDROGRAPH AT
+                CP45-1   548.  2.42     30.      8.      7.     .08

      ROUTED TO
+                R45-1    491.  2.50     30.      8.      7.     .08
+                                                        1084.77     2.50

      HYDROGRAPH AT
+                 45     2321.  2.75    368.     92.     89.     .38

      2 COMBINED AT
+                CP45    2505.  2.75    398.    100.     96.     .46

      ROUTED TO
+                SR45    2509.  2.75    398.    100.     96.     .46
+                                                        1086.75     2.75

      DIVERSION TO
+                DI45     377.  2.75    168.     42.     40.     .46

      HYDROGRAPH AT
+                CP45    2132.  2.75    230.     58.     55.     .46

      ROUTED TO
+                 R45    2044.  2.83    230.     58.     55.     .46
+                                                        1083.59     2.83

      HYDROGRAPH AT
+                46-1    1107.  2.58    140.     35.     34.     .15

      2 COMBINED AT
+                CP46-1  2832.  2.75    370.     93.     89.     .61

      ROUTED TO
+                SR46-1  2764.  2.83    370.     93.     89.     .61
+                                                        1084.74     2.83

      DIVERSION TO
+                DI46-1   253.  2.83     97.     24.     23.     .61

      HYDROGRAPH AT
+                CP46-1  2511.  2.83    273.     68.     66.     .61

      ROUTED TO
+                R46-1   2218.  3.00    273.     68.     66.     .61
+                                                        1076.86     3.00

      HYDROGRAPH AT
+                 46     4230.  2.92    774.    193.    186.     .85

      2 COMBINED AT
+                11CP46  6433.  2.92   1047.    262.    252.    1.46

      HYDROGRAPH AT
+                215B    1145.  2.33     95.     24.     23.     .10
```

	ROUTED TO							
+	R215B	585.	2.75	95.	24.	23.	.10	
+							1186.57	2.75
	HYDROGRAPH AT							
+	232A	4729.	2.58	578.	144.	139.	.61	
	2 COMBINED AT							
+	CP232A	5214.	2.58	673.	168.	162.	.71	
	ROUTED TO							
+	R232A	4170.	2.92	673.	168.	162.	.71	
+							1190.13	2.92
	HYDROGRAPH AT							
+	28	4880.	2.75	761.	190.	183.	.86	
	2 COMBINED AT							
+	CP28	8803.	2.83	1433.	358.	345.	1.57	
	ROUTED TO							
+	R28	8758.	2.83	1433.	358.	345.	1.57	
+							1168.28	2.83
	HYDROGRAPH AT							
+	30	1964.	2.58	215.	54.	52.	.28	
	2 COMBINED AT							
+	11CP30	9915.	2.83	1648.	412.	397.	1.85	
	HYDROGRAPH AT							
+	29	1635.	2.58	180.	45.	43.	.22	
	ROUTED TO							
+	SR29	719.	2.92	69.	17.	17.	.22	
+							1178.21	2.92
	ROUTED TO							
+	R29	604.	3.00	69.	17.	17.	.22	
+							1169.52	3.00
	2 COMBINED AT							
+	CP30	10094.	2.83	1717.	429.	414.	2.07	
	ROUTED TO							
+	R30	9322.	3.17	1716.	429.	414.	2.07	
+							1158.67	3.17
	HYDROGRAPH AT							
+	31	3812.	2.83	595.	149.	143.	.71	
	2 COMBINED AT							
+	CP31	12002.	3.08	2311.	578.	557.	2.78	
	ROUTED TO							
+	R31	11803.	3.25	2310.	578.	557.	2.78	
+							1102.01	3.25
	2 COMBINED AT							
+	CP46	16967.	3.17	3356.	840.	809.	4.24	
	ROUTED TO							
+	SR46	15627.	3.33	3356.	840.	809.	4.24	
+							1126.33	3.33
	ROUTED TO							
+	R46	13816.	3.67	3353.	840.	809.	4.24	
+							1068.98	3.67
	HYDROGRAPH AT							
+	CP45-1	247.	2.42	45.	11.	11.	.00	

Lin · 1040
OT 3.28 ft
Left Bank · 1165

LB = 1157
OT 1067

4002 CSM

```
      ROUTED TO
+                RD45-1    205.  2.67     45.     11.     11.     .00
+                                                        1061.75     2.67

      HYDROGRAPH AT
+                 CP45     377.  2.75    168.     42.     40.     .00

      ROUTED TO
+                 RD45     370.  3.00    168.     42.     40.     .00
+                                                        1062.23     3.00

      2 COMBINED AT
+                I7CWT4    546.  2.92    212.     53.     51.     .00

      HYDROGRAPH AT
+                CP46-1    253.  2.83     97.     24.     23.     .00

      ROUTED TO
+                RD46-1    245.  3.08     97.     24.     23.     .00
+                                                        1061.90     3.08

      2 COMBINED AT
+                I8CWT4    780.  3.00    309.     77.     75.     .00

      HYDROGRAPH AT
+                  WT4    5939.  2.58    718.    180.    173.     .77

      2 COMBINED AT
+                I9CWT4   6396.  2.58   1027.    257.    248.     .77

      2 COMBINED AT
+                I10WT4  14955.  3.67   4379.   1097.   1057.    5.01

      2 COMBINED AT
+                 CPWT4  42185.  3.58  14856.   3750.   3612.   20.96

      DIVERSION TO
+                  OUT   21092.  3.58   7428.   1875.   1806.   20.96

      HYDROGRAPH AT
+                DIVERT  21092.  3.58   7428.   1875.   1806.   20.96

      ROUTED TO
+                 RS47   11725.  4.58   4548.   1233.   1187.   20.96
+                                                        1054.65     4.58


*** NORMAL END OF HEC-1 ***
```

HEC-1 Model of 100-Yr. Flow

```
1*************************************                 *************************************
*                                   *                 *                                   *
*  FLOOD HYDROGRAPH PACKAGE  (HEC-1) *                 *      U.S. ARMY CORPS OF ENGINEERS  *
*        SEPTEMBER 1990              *                 *   HYDROLOGIC ENGINEERING CENTER   *
*         VERSION 4.0                *                 *        609 SECOND STREET          *
*                                   *                 *     DAVIS, CALIFORNIA 95616       *
*  RUN DATE 04/14/1993  TIME  08:07:32 *                 *          (916) 756-1104           *
*                                   *                 *                                   *
*************************************                 *************************************
```

```
X   X XXXXXXX  XXXXX       X
X   X X     X  X     XX
X   X X     X        X
XXXXXXX XXXX   X     XXXXX  X
X   X X     X        X
X   X X     X  X     X
X   X XXXXXXX  XXXXX      XXX
```

THIS PROGRAM REPLACES ALL PREVIOUS VERSIONS OF HEC-1 KNOWN AS HEC1 (JAN 73), HEC1GS, HEC1DB, AND HEC1KW.

THE DEFINITIONS OF VARIABLES -RTIMP- AND -RTIOR- HAVE CHANGED FROM THOSE USED WITH THE 1973-STYLE INPUT STRUCTURE.
THE DEFINITION OF -AMSKK- ON RM-CARD WAS CHANGED WITH REVISIONS DATED 28 SEP 81. THIS IS THE FORTRAN77 VERSION
NEW OPTIONS: DAMBREAK OUTFLOW SUBMERGENCE , SINGLE EVENT DAMAGE CALCULATION, DSS:WRITE STAGE FREQUENCY,
DSS:READ TIME SERIES AT DESIRED CALCULATION INTERVAL LOSS RATE:GREEN AND AMPT INFILTRATION
KINEMATIC WAVE: NEW FINITE DIFFERENCE ALGORITHM

```
1                                   HEC-1 INPUT                                   PAGE  1

  LINE      ID.......1.......2.......3.......4.......5.......6.......7.......8.......9......10

    1       ID
    2       ID
    3       ID     HYDROLOGY RUN FOR WHITE TANKS ADMS --- WATERSHED CONTRIBUTING TO WT#4
    4       ID     100-YEAR, 24-HOUR STORM                    TUT4.
    5       ID     NO BREAKOUTAT TUTHILL DIKE OR ALONG JACKRABBIT TRAIL. ALL FLOW IS
    6       ID     CONVEYED TO   WT#4.
    7       ID
    8       ID
    9       ID
            *DIAGRAM
   10       IT     5                300
   11       IO     5
   12       IN     15
   13       JD   4.03   .001
   14       PC   .000   .002   .005   .008   .011   .014   .017   .020   .023   .026
   15       PC   .029   .032   .035   .038   .041   .044   .048   .052   .056   .060
   16       PC   .064   .068   .072   .076   .080   .085   .090   .095   .100   .105
   17       PC   .110   .115   .120   .126   .133   .140   .147   .155   .163   .172
   18       PC   .181   .191   .203   .218   .236   .257   .283   .387   .663   .707
   19       PC   .735   .758   .776   .791   .804   .815   .825   .834   .842   .849
   20       PC   .856   .863   .869   .875   .881   .887   .893   .898   .903   .908
   21       PC   .913   .918   .922   .926   .930   .934   .938   .942   .946   .950
   22       PC   .953   .956   .959   .962   .965   .968   .971   .974   .977   .980
   23       PC   .983   .986   .989   .992   .995   .998   1.00  1.000  1.000  1.000
   24       JD   3.99    10
   25       JD   3.83    50
   26       JD   3.76   100
   27       JD   3.70   200

   28       KK    18
   29       KM      RUNOFF HYDROGRAPH FROM SUB-BASIN 18.
```

```
30      BA    .81
31      LG    .20    .34   3.25   1.12   9.50
32      UI   213.   719.  1128.  1731.  1159.   722.   301.   171.    49.    47.
33      UI     0.     0.     0.     0.     0.     0.     0.     0.     0.     0.
34      UI     0.     0.     0.     0.     0.     0.     0.     0.     0.     0.

35      KK    R18
36      KM       ROUTE FLOW FROM CP18 TO CP19.
37      RS     2           -1      0
38      RC    .08    .05    .08   7800  .0615
39      RX   1000   1030   1080   1097   1120   1140   1205   1218
40      RY   1520   1518   1514   1510   1510   1512   1518   1520

41      KK     19
42      KM       RUNOFF HYDROGRAPH FROM SUB-BASIN 19.
43      BA    .79
44      LG    .19    .33   3.31   1.07   8.70
45      UI    84.   195.   385.   496.   632.   936.   940.   708.   553.   427.
46      UI   278.   147.   120.    84.    32.    26.    26.    26.     0.     0.
47      UI     0.     0.     0.     0.     0.     0.     0.     0.     0.     0.
1                              HEC-1 INPUT                                PAGE 2

LINE      ID.......1.......2.......3.......4.......5.......6.......7.......8.......9......10


48      KK   CP19
49      KM       ADD HYDROGRAPHS AT CP19.
50      HC      2

51      KK    R19
52      KM       ROUTE COMBINED HYDROGRPAH AT CP19 TO CP21.
53      RS     2           -1      0
54      RC    .06    .04    .06   5772  .0246
55      RX   1000   1010   1025   1040   1055   1069   1080   1100
56      RY   1466   1464   1460   1458   1458   1460   1466   1467

57      KK     21
58      KM       RUNOFF HYDROGRAPH FROM SUB-BASIN 21.
59      BA    .79
60      LG    .19    .31   3.81    .78   4.70
61      UI    84.   191.   380.   491.   623.   915.   948.   711.   558.   430.
62      UI   291.   149.   124.    84.    37.    26.    26.    26.     0.     0.
63      UI     0.     0.     0.     0.     0.     0.     0.     0.     0.     0.

64      KK  11CP21
65      KM       ADD HYDROGRAPHS AT CP21.
66      HC      2

67      KK     20
68      KM       RUNOFF HYDROGRAPH FROM SUB-BASIN 20.
69      BA   1.07
70      LG    .19    .33   3.33   1.05   8.40
71      UI   119.   294.   560.   721.   938.  1414.  1211.   931.   714.   535.
72      UI   286.   200.   132.    83.    36.    36.    36.    36.     0.     0.
73      UI     0.     0.     0.     0.     0.     0.     0.     0.     0.     0.

74      KK   SR20
75      KM       STORAGE ROUTE THROUGH RETENTION BASIN AT CP20.
76      RS      1   STOR      0      0
77      SV      0   1.05   9.43  26.91  54.31  92.89 138.67 176.47 190.08 219.05
78      SV 249.57
79      SQ      0      0      0      0      0      0      0      0    265   1377
80      SQ   2963
81      SE   1443   1446   1450   1454   1458   1462   1466   1469   1470   1472
82      SE   1474

83      KK    R20
84      KM       ROUTE REMAINDER OF FLOW AT CP20  TO CP21
85      RS      4           -1      0
```

```
 86      RC    .06    .045    .06    6240   .0208
 87      RX   1000    1012    1025    1032    1050    1057    1070    1092
 88      RY   1424    1422    1420    1418    1418    1420    1422    1424

 89      KK   CP21
 90      KM       ADD HYDROGRAPHS AT CP21.
 91      HC     2
1                          HEC-1 INPUT                          PAGE  3

LINE     ID.......1.......2.......3.......4.......5.......6.......7.......8.......9......10


 92      KK   SR21
 93      KM       STORAGE ROUTE THROUGH RETENTION BASIN AT CP21
 94      RS     1   STOR      0      0
 95      SV     0    .68   20.68   57.58   95.91  102.34  117.65     130
 96      SQ     0      0      0      0      0    265    1377    2000
 97      SE  1319    1320    1330    1340    1347    1348    1350    1351

 98      KK    R21
 99      KM       ROUTE REMAINDER OF FLOW AT CP21 TO CP23
100      RS     1            -1      0
101      RC    .03     .03     .05    2340   .0196
102      RX   1000    1030    1050    1070    1145    1212    1225    1250
103      RY   1310    1306    1304    1302    1302    1304    1306    1310

104      KK     23
105      KM       RUNOFF HYDROGRAPH FROM SUB-BASIN 23.
106      BA    .16
107      LG    .18     .32    4.04     .65   10.60
108      UI   111.    327.    471.    228.     68.     20.      0.      0.      0.      0.
109      UI    0.      0.      0.      0.      0.      0.      0.      0.      0.      0.

110      KK   CP23
111      KM       ADD HYDROGRAPHS AT CP23
112      HC     2

113      KK   SR23
114      KM       STORAGE ROUTE THROUGH RETENTION BASIN AT CP23.
115      RS     1   STOR      0      0
116      SV     0   6.04   20.38   53.82  120.38  216.24  325.98  455.42   606.1  645.49
117      SV  685.61  767.98
118      SQ     0      0      0      0      0      0      0      0      0      0
119      SQ   928   8950
120      SE  1272    1276    1280    1284    1288    1292    1296    1300    1304    1305
121      SE  1306    1308

122      KK    R23
123      KM       ROUTE REMAINDER OF FLOW AT CP23 TO CP22A
124      RS     4            -1      0
125      RC    .05     .03     .05    4992    .005
126      RX   930     975    1000    1010    1030    1040    1041    1042
127      RY  1397  1396.5    1396    1394    1394    1396  1396.5    1397

128      KK     22
129      KM       RUNOFF HYDROGRAPH FROM SUB-BASIN 22
130      BA    .57
131      LG    .19     .33    3.38    1.03    7.40
132      UI    77.    258.    418.    563.    888.    745.    546.    395.    215.    129.
133      UI    79.     34.     24.     24.      0.      0.      0.      0.      0.      0.
134      UI    0.      0.      0.      0.      0.      0.      0.      0.      0.      0.
1                          HEC-1 INPUT                          PAGE  4

LINE     ID.......1.......2.......3.......4.......5.......6.......7.......8.......9......10


135      KK    R22
136      KM       ROUTE FLOW FROM CP22 TO CP22A
137      RS     3            -1      0
```

```
138     RC   .05   .03   .05   6230   .025
139     RX   1000   1030   1060   1070   1100   1115   1125   1150
140     RY   1294   1292   1290   1288   1288   1290   1292   1294

141     KK   22A
142     KM      RUNOFF HYDROGRAPH FROM SUB-BASIN 22A
143     BA   .50
144     LG   .15   .29   3.74   .29   1.00
145     UI   74.   286.   436.   640.   862.   603.   424.   253.   126.   79.
146     UI   30.   23.   23.   0.   0.   0.   0.   0.   0.   0.
147     UI   0.   0.   0.   0.   0.   0.   0.   0.   0.   0.

148     KK  I1C22A
149     KM      ADD HYDROGRAPHS AT CP22A
150     HC     2

151     KK   CP22A
152     KM      ADD HYDROGRAPHS AT CP22A
153     HC     2

154     KK   R22A
155     KM      ROUTE COMBINED HYDROGRAPHS AT CP22A TO CP25
156     RS     4          -1     0
157     RC   .03   .03   .05   7022   .0079
158     RX   1000   1030   1040   1047   1070   1097   1120   1200
159     RY   1255   1254   1250   1248   1250   1252   1254   1255

160     KK    25
161     KM      RUNOFF HYDROGRAPH FROM SUB-BASIN 25
162     BA   .46
163     LG   .15   .31   4.27   .49   .00
164     UI   53.   137.   254.   327.   437.   640.   505.   389.   295.   207.
165     UI   106.   80.   53.   22.   16.   16.   16.   0.   0.   0.
166     UI   0.   0.   0.   0.   0.   0.   0.   0.   0.   0.

167     KK  I1CP25
168     KM      ADD HYDROGRAPHS AT CP25
169     HC     2

170     KK    24
171     KM      RUNOFF HYDROGRAPH FROM SUB-BASIN 24
172     BA   .14
173     LG   .35   .31   3.77   .31   .00
174     UI   21.   85.   128.   193.   241.   165.   115.   61.   34.   20.
175     UI   7.   7.   7.   0.   0.   0.   0.   0.   0.   0.
176     UI   0.   0.   0.   0.   0.   0.   0.   0.   0.   0.
```



```
LINE    ID.......1.......2.......3.......4.......5.......6.......7.......8.......9......10

177     KK   SR24
178     KM      STORAGE ROUTE THROUGH RETENTION BASIN AT CP24
179     RS     1   STOR     0     0
180     SV     0   .46   2.96   16.6    86  221.55  282.99  306.59  357.02
181     SQ     0    0    0    0    0    0    0    50   2598
182     SE   1210   1214   1216   1220   1230   1240   1243   1244   1246

183     KK    R24
184     KM      ROUTE REMAINDER OF FLOW AT CP24 TO CP25
185     RS     1          -1     0
186     RC   .05   .03   .05   1326   .021
187     RX   1000   1040   1070   1100   1200   1220   1245   1265
188     RY   1234   1232   1230   1228   1228   1230   1232   1234

189     KK   CP25
190     KM      COMBINE HYDROGRAPHS AT CP25
191     HC     2
```

```
192     KK   SR25
193     KM      STORAGE ROUTE THROUGH RETENTION BASIN AT CP25
194     RS     1   STOR      0      0
195     SV     0   5.61   10.27   13.15   16.62   26.62
196     SQ     0      0      0      0     125    2273
197     SE   1204   1210   1212   1213   1214   1216

198     KK    26
199     KM      RUNOFF FROM SUB-BASIN 26
200     BA   1.16
201     LG    .17    .30   3.97    .68   3.10
202     UI   103.   163.   401.   532.   639.   787.  1092.  1251.   956.   788.
203     UI   637.   510.   359.   200.   171.   117.    99.    32.    32.    32.
204     UI    32.    32.     0.     0.     0.     0.     0.     0.     0.     0.
205     UI     0.     0.     0.     0.     0.     0.     0.     0.     0.     0.

206     KK   R26
207     KM      ROUTE FLOW FROM CP26 TO CP27
208     RS     4           -1      0
209     RC    .05    .03    .05   7020  .0157
210     RX   1000   1012   1025   1040   1090   1105   1112   1120
211     RY   1250   1248   1245   1242   1242   1244   1247   1250

212     KK    27
213     KM      RUNOFF HYDROGRAPH FROM SUB-BASIN 27
214     BA   1.00
215     LG    .15    .31   4.27    .48    .30
216     UI   101.   206.   438.   567.   705.   970.  1225.   936.   750.   587.
217     UI   450.   256.   172.   129.    99.    31.    31.    31.    31.     0.
218     UI     0.     0.     0.     0.     0.     0.     0.     0.     0.     0.
219     UI     0.     0.     0.     0.     0.     0.     0.     0.     0.     0.
```



```
LINE    ID.......1.......2.......3.......4.......5.......6.......7.......8.......9......10

220     KK 11CP27
221     KM      ADD HYDROGRAPHS AT CP27
222     HC     2

223     KK   SR27
224     KM      STORAGE ROUTE THROUGH RETENTION BASIN AT CP27
225     RS     1   STOR      0      0
226     SV     0    .13    5.77    9.37   11.42   13.71   19.21
227     SQ     0      0      0      0      0     550    4546
228     SE   1203   1204   1210   1212   1213   1214   1216

229     KK   CP27
230     KM      ADD REMAINING FLOW OF CP25 & CP27 AT CP27
231     HC     2

232     KK   R27
233     KM      ROUTE COMBINED REMAINDER FLOW AT CP27 TO CP39
234     RS     3           -1      0
235     RC    .03    .03    .05   5928  .0084
236     RX   1000   1010   1020   1025   1055   1085   1175   1250
237     RY   1210   1210   1210   1202   1202   1204   1206   1208

238     KK    34
239     KM      RUNOFF HYDROGRAPH FROM SUB-BASIN 34
240     BA    .36
241     LG    .20    .34   3.21   1.14  10.00
242     UI    57.   229.   343.   530.   615.   416.   284.   139.    81.    43.
243     UI    17.    17.     0.     0.     0.     0.     0.     0.     0.     0.
244     UI     0.     0.     0.     0.     0.     0.     0.     0.     0.     0.

245     KK    33
246     KM      RUNOFF HYDROGRAPH FROM SUB-BASIN 33
247     BA    .65
```

```
248     LG   .20   .34   3.21   1.14   10.00
249     UI   99.   392.   591.   888.   1120.   769.   535.   290.   159.   93.
250     UI   30.   30.   30.   0.   0.   0.   0.   0.   0.   0.
251     UI   0.   0.   0.   0.   0.   0.   0.   0.   0.   0.

252     KK   CP33
253     KM      ADD HYDROGRAPHS AT CP33
254     HC     2

255     KK   R33
256     KM      ROUTE COMBINED HYDROGRAPHS AT CP33 TO CP35
257     RS    2          -1     0
258     RC   .08   .05   .08   4680   .0427
259     RX   1000   1015   1022   1035   1050   1068   1092   1100
260     RY   1800   1760   1720   1680   1680   1720   1760   1800
1                          HEC-1 INPUT                          PAGE 7

LINE    ID.......1.......2.......3.......4.......5.......6.......7.......8.......9......10


261     KK    35
262     KM      RUNOFF HYDROGRAPH FROM SUB-BASIN 35
263     BA   .39
264     LG   .20   .34   3.21   1.14   10.00
265     UI   72.   272.   410.   672.   631.   428.   270.   119.   74.   28.
266     UI   20.   20.   0.   0.   0.   0.   0.   0.   0.   0.
267     UI   0.   0.   0.   0.   0.   0.   0.   0.   0.   0.

268     KK  11CP35
269     KM      ADD HYDROGRAPHS AT CP35
270     HC     2

271     KK    32
272     KM      RUNOFF HYDROGRAPH FROM SUB-BASIN 32
273     BA   1.29
274     LG   .20   .34   3.21   1.14   10.00
275     UI   130.   270.   570.   738.   919.   1268.   1585.   1202.   963.   753.
276     UI   575.   317.   221.   161.   121.   40.   40.   40.   40.   0.
277     UI   0.   0.   0.   0.   0.   0.   0.   0.   0.   0.
278     UI   0.   0.   0.   0.   0.   0.   0.   0.   0.   0.

279     KK   CP35
280     KM      ADD HYDROGRAPHS AT CP35
281     HC     2

282     KK   R35
283     KM      ROUTE COMBINED HYDROGRAPHS AT CP35 TO CP36
284     RS    2          -1     0
285     RC   .06   .035   .06   5070   .0355
286     RX   1000   1012   1023   1034   1045   1056   1067   1079
287     RY   1429   1428   1426   1424   1424   1426   1428   1429

288     KK    36
289     KM      RUNOFF HYDROGRAPH FROM SUB-BASIN 36
290     BA   .24
291     LG   .16   .34   2.38   1.41   1.10
292     UI   34.   127.   197.   278.   409.   297.   212.   140.   65.   43.
293     UI   22.   11.   11.   0.   0.   0.   0.   0.   0.   0.
294     UI   0.   0.   0.   0.   0.   0.   0.   0.   0.   0.

295     KK  11CP36
296     KM      ADD HYDROGRAPHS AT CP36
297     HC     2

298     KK    37
299     KM      RUNOFF HYDROGRAPH FROM SUB-BASIN 37
300     BA   .95
301     LG   .19   .34   3.24   1.08   8.40
302     UI   90.   167.   373.   488.   598.   764.   1104.   941.   747.   598.
```

```
303     UI  475.  344.  190.  151.  103.   81.   28.   28.   28.   28.
304     UI   28.    0.    0.    0.    0.    0.    0.    0.    0.    0.
305     UI    0.    0.    0.    0.    0.    0.    0.    0.    0.    0.
1                          HEC-1 INPUT                          PAGE  8

LINE    ID.......1.......2.......3.......4.......5.......6.......7.......8.......9......10


306     KK  CP36
307     KM     ADD HYDROGRAPHS AT CP 36
308     HC     2

309     KK   R36
310     KM     ROUTE COMBINED HYDROGRAPHS AT CP36 TO CP38
311     RS    2          -1     0
312     RC   .05    .03    .05   4836  .0198
313     RX  1000   1008   1020   1032   1050   1112   1135   1183
314     RY  1344   1342   1340   1338   1338   1340   1342   1344

315     KK    38
316     KM     RUNOFF HYDROGRAPH FROM SUB-BASIN 38
317     BA   .76
318     LG   .17    .34   3.21    .97   4.50
319     UI  103.   354.   568.   770.  1209.   983.   720.   513.   270.   168.
320     UI  103.    36.    32.    32.     0.     0.     0.     0.     0.     0.
321     UI    0.     0.     0.     0.     0.     0.     0.     0.     0.     0.

322     KK  CP38
323     KM     ADD HYDROGRAPHS AT CP38
324     HC     2

325     KK  SR38
326     KM     STORAGE ROUTE THROUGH RETENTION BASIN AT CP38
327     RS     1   STOR     0     0
328     SV     0   1.83  15.38  39.25  41.76  47.45  60.58
329     SQ     0     0     0     0     44   2223   6550
330     SE  1275   1280   1290  1297.5  1298   1300   1301

331     KK   R38
332     KM     ROUTE REMAINDER OF FLOW AT CP38 TO CP39
333     RS    3          -1     0
334     RC   .05    .03    .05   5438  .0167
335     RX  1000   1005   1010   1025   1055   1085   1175   1250
336     RY  1212   1211   1210   1202   1202   1204   1206   1208

337     KK    39
338     KM     RUNOFF HYDROGRAPH FROM SUB-BASIN 39
339     BA   .77
340     LG   .15    .34   3.81    .63    .20
341     UI   64.    82.   232.   313.   372.   450.   565.   791.   683.   550.
342     UI  460.   376.   308.   213.   122.   106.    77.    64.    29.    20.
343     UI   20.    20.    20.    20.     0.     0.     0.     0.     0.     0.
344     UI    0.     0.     0.     0.     0.     0.     0.     0.     0.     0.

345     KK 11CP39
346     KM     ADD HYDROGRAPHS AT CP39
347     HC     2
1                          HEC-1 INPUT                          PAGE  9

LINE    ID.......1.......2.......3.......4.......5.......6.......7.......8.......9......10


348     KK  CP39
349     KM     ADD HYDROGRAPHS AT CP39
350     HC     2

351     KK   R39
352     KM     ROUTE COMBINED HYDROGRAPH AT CP39 TO CP42
353     RS    2          -1     0
```

```
354     RC    .03    .03    .05   4836  .0141
355     RX   1000   1005   1015   1025   1055   1070   1087   1130
356     RY   1143   1142   1140   1132   1132   1136   1140   1142

357     KK    40
358     KM       RUNOFF HYDROGRAPH FROM SUB-BASIN 40
359     BA    .52
360     LG    .18    .34   3.54    .89   7.00
361     UI   73.   258.   407.   562.   862.   658.   478.   331.   158.   104.
362     UI   61.    22.    22.    22.     0.     0.     0.     0.     0.     0.
363     UI    0.     0.     0.     0.     0.     0.     0.     0.     0.     0.

364     KK    R40
365     KM       ROUTE FLOW FROM CP40 TO CP42
366     RS     4           -1      0
367     RC    .05    .03    .05   6396  .0086
368     RX   1000   1010   1065   1095   1135   1155   1215   1220
369     RY   1115   1114   1112   1110   1110   1112   1113   1113

370     KK    42
371     KM       RUNOFF HYDROGRAPH FROM SUB-BASIN 42
372     BA   1.18
373     LG    .21    .32   4.21    .45    .10
374     UI    98.   128.   359.   483.   575.   696.   878.  1223.  1042.   840.
375     UI   701.   573.   467.   322.   182.   163.   115.    98.    39.    30.
376     UI    30.    30.    30.    30.     0.     0.     0.     0.     0.     0.
377     UI     0.     0.     0.     0.     0.     0.     0.     0.     0.     0.

378     KK  I1CP42
379     KM       ADD HYDROGRAPHS AT CP42
380     HC     2

381     KK   CP42
382     KM       ADD HYDROGRAPHS AT CP42
383     HC     2

384     KK   SR42
385     KM       STORAGE ROUTE THROUGH RETENTION BASIN AT CP42
386     RS     1   STOR     0     0
387     SV     0    .11   10.43  41.63   69.9  77.34   94.2 113.66  134.7 160.78
388     SQ     0     0      0      0      0    163    844   2096   4630  13500
389     SE 1071.5   1072   1080   1090   1095   1096   1098   1100   1102   1104
1                          HEC-1 INPUT                                PAGE 10

LINE    ID.......1.......2.......3.......4.......5.......6.......7.......8.......9......10


390     KK    R42
391     KM       ROUTE REMAINDER OF HYDROGRAPH AT CP42 TO CP43
392     RS     1           -1      0
393     RC    .03    .03    .05    858  .0151
394     RX    900    950   1000   1030   1060   1075   1080   1090
395     RY   1094   1088   1086   1084   1084   1086   1088   1094

396     KK   41A1
397     KM       RUNOFF HYDROGRAPH FROM SUB-BASIN 41A1.
398     BA    .02
399     LG    .35    .31   3.70    .31    .00
400     UI    35.    87.    28.     4.     0.     0.     0.     0.     0.     0.
401     UI     0.     0.     0.     0.     0.     0.     0.     0.     0.     0.

402     KK  SR41A1
403     KM       STORAGE ROUTE THROUGH 30" CMP AT STA 6255+85 ON I-10.
404     RS     1   STOR     0     0
405     SV     0    .43    .53    .63    .74   1.24   1.65   3.40   6.20
406     SQ     0     10     14     18     23     29     33    869   6050
407     SE 1133.4 1134.91 1135.23 1135.58 1135.97 1137.62 1139.0 1140.3 1143.85

408     KK  CP41A1
```

```
409     KM      DIVERT FLOW FROM CP41A1 TO CP303
410     DT  1D303
411     DI    0    14    23    33   869  6050
412     DQ    0    14    23    33    35    42

413     KK  R41A1
414     KM      ROUTE REMAINDER FROM CP41A1 TO CP41A2.
415     RS    1          -1     0
416     RC   .06   .03   .04   580  .0093
417     RX  600   800   900   965  1000  1020  1030  1040
418     RY 1147  1143  1142  1141  1141  1143  1145  1145

419     KK  41A2
420     KM      RUNOFF HYDROGRAPH FROM SUB-BASIN 41A2.
421     BA   .03
422     LG   .35   .34  3.91   .57   .00
423     UI  46.  124.   51.    9.    0.    0.    0.    0.    0.    0.
424     UI   0.    0.    0.    0.    0.    0.    0.    0.    0.    0.

425     KK  CP41A2
426     KM      ADD HYDROGRAPHS AT CP41A2.
427     HC    2   .05

428     KK  SR41A2
429     KM      STORAGE ROUTE THROUGH 30" CMP AT STA 6261+65 ON I-10.
430     RS    1  STOR    0    0
431     SV    0   .10   .24   .31   .62  1.72
432     SQ    0     8    19    24   624  2104
433     SE  1132.7 1134.07 1134.98 1135.56 1137.34 1139.65
```



```
LINE    ID.......1.......2.......3.......4.......5.......6.......7.......8.......9......10

434     KK  CP41A2
435     KM      DIVERT FLOW FROM CP41A2 TO CP303
436     DT  2D303
437     DI    0     8    19    24   624  2104
438     DQ    0     8    19    24    30    36

439     KK  R41A2
440     KM      ROUTE REMAINDER FROM CP41A2 TO CP41A3.
441     RS    1          -1     0
442     RC   .06   .03   .04   595  .0093
443     RX  600   800   900   965  1000  1020  1030  1040
444     RY 1140  1136  1135  1134  1134  1136  1138  1140

445     KK  41A3
446     KM      RUNOFF HYDROGRAPH FROM SUB-BASIN 41A3.
447     BA   .03
448     LG   .35   .31  3.64   .30   .00
449     UI  38.  112.   64.   14.    4.    0.    0.    0.    0.    0.
450     UI   0.    0.    0.    0.    0.    0.    0.    0.    0.    0.

451     KK  CP41A3
452     KM      ADD HYDROGRAPHS AT CP41A3.
453     HC    2   .08

454     KK  SR41A3
455     KM      STORAGE ROUTE THROUGH 30" CMP AT STA 6267+60 ON I-10
456     RS    1  STOR    0    0
457     SV    0   .86  1.05  1.25  1.48  2.51  2.84  4.15  5.46  8.08
458     SQ    0    10    14    18    23    29    32   254   654   896
459     SE  1128.6 1130.13 1130.45 1130.80 1131.19 1132.94 1133.5 1134.0 1134.5 1135.57

460     KK  CP41A3
461     KM      DIVERT FLOW FROM CP41A3 TO CP303
462     DT  3D303
463     DI    0    10    14    18    23    29    32   254   659  1896
```

```
464     DQ     0    10    14    18    23    29    32    33    34    35

465     KK  R41A3
466     KM      ROUTE REMAINDER FROM CP41A3 TO CP41A.
467     RS     1          -1     0
468     RC   .06    .03    .04    628   .0093
469     RX   600    800    900    965   1000   1020   1030   1040
470     RY  1135   1131   1130   1129   1129   1131   1133   1133

471     KK   41A
472     KM      RUNOFF HYDROGRAPH FROM SUB-BASIN 41A.
473     BA   .05
474     LG   .35    .34   4.01    .53    .00
475     UI   44.   136.   137.    51.    14.     5.     0.     0.     0.     0.
476     UI    0.     0.     0.     0.     0.     0.     0.     0.     0.     0.
1                              HEC-1 INPUT                              PAGE 12

LINE    ID.......1.......2.......3.......4.......5.......6.......7.......8.......9......10


477     KK  CP41A
478     KM      ADD HYDROGRAPHS AT CP41A.
479     HC     2    .13

480     KK  SR41A
481     KM      STORAGE ROUTE THROUGH 36" CMP AT STA 6273+88 ON I-10
482     RS     1   STOR     0     0
483     SV     0   1.22   2.65   3.07   3.20   4.78   6.37   7.96   9.57
484     SQ     0     10     36     44     45    312    799   1429   2047
485     SE  1124.4 1125.75 1127.38 1127.86  1128.0  1128.5  1129.0  1129.5 1129.92

486     KK  CP41A
487     KM      DIVERT FLOW FROM CP41A TO CP303
488     DT  4D303
489     DI     0     10     36     44     45    312    799   1429   2047
490     DQ     0     10     36     44     45     47     49     51     52

491     KK   R41A
492     KM      ROUTE REMAINDER FROM CP41A TO CP41-1.
493     RS     1          -1     0
494     RC   .06    .03    .04   1437   .0093
495     RX   600    800    900    965   1000   1020   1030   1040
496     RY  1122   1118   1117   1116   1116   1118   1120   1120

497     KK   41-1
498     KM      RUNOFF HYDROGRAPH FROM SUB-BASIN 41-1
499     BA   .15
500     LG   .35    .35   3.78    .62    .00
501     UI   45.   148.   244.   325.   203.   111.    46.    21.     9.     9.
502     UI    0.     0.     0.     0.     0.     0.     0.     0.     0.     0.
503     UI    0.     0.     0.     0.     0.     0.     0.     0.     0.     0.

504     KK  CP41-1
505     KM      ADD HYDROGRAPHS AT CP41-1
506     HC     2    .28

507     KK  SR41-1
508     KM      STORAGE ROUTE THROUGH 2-36" CMP AT STA 6288+25 ON I-10.
509     RS     1   STOR     0     0
510     SV     0    .73   3.47   3.94   4.53   5.12   5.71
511     SQ     0     10     36     44    489   1300   2348
512     SE  1112.7 1114.08 1115.71   1116  1116.5   1117  1117.5

513     KK  CP41-1
514     KM      DIVERT FLOW FROM CP41-1 TO CP303
515     DT  5D303
516     DI     0     10     36     44    489   1300   2348
517     DQ     0     10     36     44     47     50     52
1                              HEC-1 INPUT                              PAGE 13
```

```
LINE      ID.......1.......2.......3.......4.......5.......6.......7.......8.......9......10

518       KK  R41-1
519       KM      ROUTE REMAINDER FROM CP41-1 TO CP41-2.
520       RS    1          -1     0
521       RC   .06    .03    .04   1697  .0075
522       RX   600    800    900    965   1000   1020   1030   1040
523       RY  1104   1102   1101   1100   1100   1102   1104   1105

524       KK   41-2
525       KM      RUNOFF HYDROGRAPH FROM SUB-BASIN 41-2
526       BA   .10
527       LG   .35    .35   3.87    .58    .30
528       UI   31.   101.   169.   216.   133.    69.    30.    13.     6.     0.
529       UI    0.     0.     0.     0.     0.     0.     0.     0.     0.     0.
530       UI    0.     0.     0.     0.     0.     0.     0.     0.     0.     0.

531       KK  CP41-2
532       KM      ADD HYDROGRAPHS AT CP41-2
533       HC    2    .38

534       KK  SR41-2
535       KM      STORAGE ROUTE THROUGH 2-42" CMP AT STA 6305+22 ON I-10.
536       RS    1   STOR     0     0
537       SV    0    .84   1.23   1.78   2.46   3.31   4.34   5.61   7.63  11.57
538       SV  13.47  15.30  19.63  23.76
539       SQ    0     10     14     18     23     29     35     42     50     56
540       SQ  201    419    469   1836
541       SE  1099.2 1100.45 1100.70 1100.96 1101.23 1101.52 1101.83 1102.17 1102.83  1103.5
542       SE  1103.8   1104  1104.5 1104.95

543       KK  CP41-2
544       KM      DIVERT FLOW FROM CP41-2 TO CP303
545       DT  6D303
546       DI    0     10     14     18     23     29     35     42     50     56
547       DI  201    419    469   1836
548       DQ    0     10     14     18     23     29     35     42     50     56
549       DQ   59     61     64     68

550       KK  R41-2
551       KM      ROUTE REMAINDER FROM CP41-2 TO CP41.
552       RS    1          -1     0
553       RC   .06    .03    .04    978  .0053
554       RX   650    800    850    965   1000   1020   1030   1040
555       RY  1100   1099   1098   1096   1096   1098   1100   1101

556       KK    41
557       KM      RUNOFF HYDROGRAPH FROM SUB-BASIN 41
558       BA   .58
559       LG   .21    .34   4.24    .44    .30
560       UI   56.   108.   237.   308.   380.   493.   696.   562.   450.   357.
561       UI  282.   193.   103.    90.    56.    38.    17.    17.    17.    17.
562       UI    0.     0.     0.     0.     0.     0.     0.     0.     0.     0.
563       UI    0.     0.     0.     0.     0.     0.     0.     0.     0.     0.
1                              HEC-1 INPUT                                PAGE 14

LINE      ID.......1.......2.......3.......4.......5.......6.......7.......8.......9......10

564       KK   CP41
565       KM      ADD HYDROGRAPHS AT CP41
566       HC    2    .68

567       KK   SR41
568       KM      STORAGE ROUTE THROUGH 2-36" CMP AT STA 6315+00 ON I-10.
569       RS    1   STOR     0     0
570       SV    0    .09    .37    .86   2.15   2.99   4.92   5.83   7.92  11.06
571       SV  15.07
```

```
572     SQ     0     8    11    15    24    30    36    42    43   400
573     SQ   1219
574     SE  1094.6 1095.91 1096.15 1096.42 1096.99 1097.30 1097.91 1099.12  1099.5  1100.0
575     SE  1100.6

576     KK   CP41
577     KM       DIVERT FLOW FROM CP41 TO CP303
578     DT  7D303
579     DI     0     8    11    15    24    30    36    42    43   400
580     DI   1219
581     DQ     0     8    11    15    24    30    36    42    43    46
582     DQ    50

583     KK    R41
584     KM       ROUTE REMAINDER FROM CP41 TO CP43-1.
585     RS     1          -1     0
586     RC   .06   .03   .04   700  .0053
587     RX   650   800   850   965  1000  1020  1030  1040
588     RY  1098  1097  1096  1094  1094  1096  1098  1099

589     KK   43-1
590     KM       RUNOFF HYDROGRAPH FROM SUB-BASIN 43-1
591     BA   .04
592     LG   .35   .35  4.29   .40   .90
593     UI   25.   74.  117.   63.   21.    7.    3.    0.    0.    0.
594     UI    0.    0.    0.    0.    0.    0.    0.    0.    0.    0.

595     KK  CP43-1
596     KM       ADD HYDROGRAPHS AT CP43-1
597     HC     2   1.0

598     KK  SR43-1
599     KM       STORAGE ROUTE THROUGH 5-48" CMP FROM STA 6319+32 TO STA 6324+32 ON I-10.
600     RS     1  STOR     0     0
601     SV     0   .37   .80  1.58  2.71  4.54  5.86  7.60 12.33 14.79
602     SV  21.44
603     SQ     0    32    60   102   120   220   260   301   357   501
604     SQ  1057
605     SE  1091.7 1092.82 1093.25 1093.72 1094.21 1094.77 1095.08 1095.43 1096.19  1096.5
606     SE  1097.0
```



```
LINE    ID.......1.......2.......3.......4.......5.......6.......7.......8.......9......10


607     KK  CP43-1
608     KM       DIVERT FLOW FROM CP43-1 TO CP303A
609     DT  1D303A
610     DI     0    32    60   102   120   220   260   301   357   501
611     DI  1057
612     DQ     0    32    60   102   120   220   260   301   357   378
613     DQ   417

614     KK   R43-1
615     KM       ROUTE REMAINDER FROM CP43-1 TO CP43-2.
616     RS     1          -1     0
617     RC   .06   .03   .04   500  .005
618     RX   600   725   800   965  1000  1020  1030  1040
619     RY  1095  1094 1093.5  1093  1093  1094  1096  1097

620     KK   43-2
621     KM       RUNOFF HYDROGRAPH FROM SUB-BASIN 43-2
622     BA   .01
623     LG   .35   .35  4.25   .42  1.30
624     UI    9.   28.   27.   10.    2.    1.    0.    0.    0.    0.
625     UI    0.    0.    0.    0.    0.    0.    0.    0.    0.    0.

626     KK  CP43-2
627     KM       ADD HYDROGRAPHS AT CP43-2
```

```
628     HC      2   1.01

629     KK  SR43-2
630     KM      STORAGE ROUTE THROUGH 36" CMP AT STA 6326+40 ON I-10.
631     RS      1   STOR     0     0
632     SV      0   .12   .38   .71   1.11   1.61   3.12   3.95   5.19   6.02
633     SQ      0    8    12    15    20    24    36    38    128    222
634     SE  1092.0 1093.28 1093.52 1093.78 1094.05 1094.35 1095.13  1095.5  1096.0  1096.3

635     KK  CP43-2
636     KM      DIVERT FLOW FROM CP43-2 TO CP303A
637     DT  2D303A
638     DI      0     8    12    15    20    24    36    38    128    222
639     DQ      0     8    12    15    20    24    36    38    40    43

640     KK   R43-2
641     KM      ROUTE REMAINDER FROM CP43-2 TO CP43-3.
642     RS      1          -1     0
643     RC    .06    .03    .04   1000   .003
644     RX    750    800    900    965   1000   1020   1030   1040
645     RY  1096.5   1096   1094   1093   1093   1094   1096   1097

646     KK    43-3
647     KM      RUNOFF HYDROGRAPH FROM SUB-BASIN 43-3
648     BA    .05
649     LG    .35    .35   4.30    .40    .90
650     UI    68.   195.    98.    20.     0.     0.     0.     0.     0.     0.
651     UI     0.     0.     0.     0.     0.     0.     0.     0.     0.     0.
1                              HEC-1 INPUT                              PAGE 16

LINE    ID.......1.......2.......3.......4.......5.......6.......7.......8.......9......10


652     KK  CP43-3
653     KM      ADD HYDROGRAPHS AT CP43-3.
654     HC      2   1.06

655     KK  SR43-3
656     KM      STORAGE ROUTE THROUGH 3-36" CMPS FROM STA 6330+50 TO STA 6340+10 ON I-10
657     RS      1   STOR     0     0
658     SV      0   2.47   3.51   4.85   6.37   8.27   10.69   13.89   18.76   30.99
659     SQ      0    27    36    48    63    78    93    165    364    951
660     SE  1092.8 1094.12 1094.37 1094.65 1094.93 1095.24 1095.59    1096 1096.56 1097.79

661     KK  CP43-3
662     KM      DIVERT FLOW FROM CP43-3 TO CP303A
663     DT  3D303A
664     DI      0    27    36    48    63    78    93    165    364    951
665     DQ      0    27    36    48    63    78    93    102    114    135

666     KK   R43-3
667     KM      ROUTE REMAINDER FROM CP43-3 TO CP43-4.
668     RS      1          -1     0
669     RC    .06    .03    .04    800   .018
670     RX    800    850    930    965   1000   1020   1030   1040
671     RY  1096.5   1096   1094   1093   1093   1096   1097  1097.5

672     KK    43-4
673     KM      RUNOFF HYDROGRAP FROM SUB-BASIN 43-4
674     BA    .03
675     LG    .35    .35   4.28    .41    .80
676     UI    43.   121.    54.    10.     0.     0.     0.     0.     0.     0.
677     UI     0.     0.     0.     0.     0.     0.     0.     0.     0.     0.

678     KK  CP43-4
679     KM      ADD HYDROGRAPHS AT CP43-4
680     HC      2   1.09

681     KK  SR43-4
```

```
682     KM      STORAGE ROUTE THROUGH 2-36" CMPS FROM STA 6343+25 TO STA 6345+65 ON I10
683     RS     1   STOR     0     0
684     SV     0    .89   1.27    1.8   2.43   3.24   3.31   4.75   7.05  12.83
685     SQ     0     18     24     32     42     52     62    131    326    906
686     SE  1092.8 1094.12 1094.37 1094.65 1094.93 1095.24 1095.59   1096 1096.56 1097.79

687     KK  CP43-4
688     KM      DIVERT FLOW AT STA 6345+65
689     DT  DI43-4
690     DI     0     18     24     32     42     52     62    131    326    906
691     DQ     0     18     24     32     42     52     62     68     76     90

692     KK   R43-4
693     KM      ROUTE REMAINDER FROM CP43-4 TO CP43-5
694     RS     1           -1     0
695     RC   .06    .03    .04    500   .018
696     RX   800    850    930    965   1000   1020   1030   1040
697     RY  1096.5  1096   1094   1093   1093   1096   1097  1097.5
1                           HEC-1 INPUT                          PAGE 17

LINE    ID.......1.......2.......3.......4.......5.......6.......7.......8.......9......10


698     KK   43-5
699     KM      RUNOFF HYDROGRAPH FROM SUB-BASIN 43-5
700     BA   .02
701     LG   .35    .35   4.25    .39    .00
702     UI   27.    79.    39.     8.     0.     0.     0.     0.     0.     0.
703     UI    0.     0.     0.     0.     0.     0.     0.     0.     0.     0.

704     KK  CP43-5
705     KM      ADD HYDROGRAPHS AT CP43-5
706     HC     2   1.11

707     KK  SR43-5
708     KM      STORAGE ROUTE THROUGH 36" CMP AT STA 6349+45 ON I-10
709     RS     1   STOR     0     0
710     SV     0    .09    .24    .44    .69    1.0   1.42   2.14   2.76   3.73
711     SV  4.84   5.94
712     SQ     0      9     13     17     22     27     34     40     42     44
713     SQ   134    276
714     SE  1089.8 1091.09 1091.35 1091.64 1091.94 1092.26 1092.62 1093.13  1093.5    1094
715     SE  1094.5 1094.94

716     KK  CP43-5
717     KM      DIVERT FLOW AT STA 6349+45.
718     DT  DI43-5
719     DI     0      9     13     17     22     27     34     40     42     44
720     DI   134    276
721     DQ     0      9     13     17     22     27     34     40     42     44
722     DQ    46     48

723     KK   R43-5
724     KM      ROUTE REMAINDER FROM CP43-5 TO CP43-6
725     RS     1           -1     0
726     RC   .06    .03    .04    455  .0068
727     RX   800    850    930    965   1000   1020   1030   1040
728     RY  1096   1094   1093   1092   1092   1094   1096  1097.5

729     KK   43-6
730     KM      RUNOFF HYDROGRAPH FROM SUB-BASIN 43-6
731     BA   .02
732     LG   .35    .35   4.17    .38    .00
733     UI   36.    87.    27.     4.     0.     0.     0.     0.     0.     0.
734     UI    0.     0.     0.     0.     0.     0.     0.     0.     0.     0.

735     KK  CP43-6
736     KM      ADD HYDROGRAPHS AT CP43-6
737     HC     2   1.13
```

```
738     KK  SR43-6
739     KM      STORAGE ROUTE THROUGH 36" CMP AT STA 6354+00 ON I-10
740     RS     1   STOR     0     0
741     SV     0   1.59   2.29   3.18   4.29   5.62   7.39   9.53  14.20  30.25
742     SV  32.52   38.0  43.84  49.83  55.96  59.96
743     SQ     0     9    13    17    22    27    33    39    47    55
744     SQ    56   141   325   811  1440  2714
1                          HEC-1 INPUT                          PAGE 18

LINE    ID.......1.......2.......3.......4.......5.......6.......7.......8.......9......10

745     SE  1089.3 1090.58 1090.84 1091.12 1091.42 1091.73 1092.09 1092.47 1093.23 1095.27
746     SE  1095.5  1096.0  1096.5  1097.0  1097.5 1097.82

747     KK  CP43-6
748     KM      DIVERT FLOW AT STA 6354+00.
749     DT  DI43-6
750     DI     0     9    13    17    22    27    33    39    47    55
751     DI    56   141   325   811  1440  2714
752     DQ     0     9    13    17    22    27    33    39    47    55
753     DQ    56    58    60    61    62    64

754     KK   R43-6
755     KM      ROUTE REMAINDER FROM CP43-6 TO CP43-7
756     RS     1          -1     0
757     RC   .06   .03   .04   300  .0162
758     RX   750   800   930   965  1000  1020  1030  1040
759     RY  1096  1094  1092  1090  1090  1092  1096  1097.5

760     KK   43-7
761     KM      RUNOFF HYDROGRAPH FROM SUB-BASIN 43-7
762     BA   .02
763     LG   .35   .35  4.25   .39   .00
764     UI   49.   90.   14.    0.    0.    0.    0.    0.    0.    0.
765     UI    0.    0.    0.    0.    0.    0.    0.    0.    0.    0.

766     KK  CP43-7
767     KM      ADD HYDROGRAPHS AT CP43-7
768     HC     2   1.15

769     KK  SR43-7
770     KM      STORAGE ROUTE THROUGH 36" CMP AT STA 6357+00 ON I-10
771     RS     1   STOR     0     0
772     SV     0   .27   .39   .55   .74   .98  1.30  1.78  2.23  5.12
773     SQ     0    10    13    18    23    29    35    38   101   892
774     SE  1087.6 1088.93 1089.20 1089.49 1089.80 1090.13 1090.51  1091.0 1091.39 1093.26

775     KK  CP43-7
776     KM      DIVERT FLOW AT STA 6357+00.
777     DT  DI43-7
778     DI     0    10    13    18    23    29    35    38   101   892
779     DQ     0    10    13    18    23    29    35    38    40    42

780     KK   R43-7
781     KM      ROUTE REMAINDER FROM CP43-7 TO CP43-8
782     RS     1          -1     0
783     RC   .06   .03   .04   385  .018
784     RX   700   800   850   965  1000  1020  1030  1040
785     RY  1094  1093  1092  1090  1090  1092  1096  1097.5

786     KK   43-8
787     KM      RUNOFF HYDROGRAPH FROM SUB-BASIN 43-8
788     BA   .01
789     LG   .35   .35  4.25   .39   .00
790     UI   36.   37.    4.    0.    0.    0.    0.    0.    0.    0.
791     UI    0.    0.    0.    0.    0.    0.    0.    0.    0.    0.
1                          HEC-1 INPUT                          PAGE 19
```

```
LINE      ID.......1.......2.......3.......4.......5.......6.......7.......8.......9......10

 792      KK  CP43-8
 793      KM       ADD HYDROGRAPHS AT CP43-8
 794      HC      2    1.16

 795      KK  SR43-8
 796      KM       STORAGE ROUTE THROUGH 36" CMP AT STA 6360+85 ON I-10
 797      RS      1   STOR      0      0
 798      SV      0    .22    .32    .46    .63    .89   1.74   3.41   4.93    6.3
 799      SV   6.87
 800      SQ      0      8     12     15     20     24     30     36     39    129
 801      SQ    186
 802      SE  1085.1 1086.38 1086.62 1086.88 1087.15 1087.48 1088.28 1089.33 1090.0  1090.5
 803      SE  1090.7

 804      KK  CP43-8
 805      KM       DIVERT FLOW AT STA 6360+85.
 806      DT  DI43-8
 807      DI      0      8     12     15     20     24     30     36     39    129
 808      DI    186
 809      DQ      0      8     12     15     20     24     30     36     39     41
 810      DQ     43

 811      KK   R43-8
 812      KM       ROUTE REMAINDER FROM CP43-8 TO CP43.
 813      RS      1            -1      0
 814      RC    .06    .03    .04    600   .008
 815      RX    800    850    930    965   1000   1020   1030   1040
 816      RY   1096   1092   1090   1088   1088   1090   1096  1097.5

 817      KK     43
 818      KM       RUNOFF HYDROGRAPH FROM SUB-BASIN 43
 819      BA    .01
 820      LG    .35    .35   4.29    .41    .60
 821      UI    25.    45.     7.     0.     0.     0.     0.     0.     0.     0.
 822      UI     0.     0.     0.     0.     0.     0.     0.     0.     0.     0.

 823      KK  I1CP43
 824      KM       ADD HYDROGRAPHS AT CP43
 825      HC      2    1.17

 826      KK   CP43     .03
 827      KM       ADD HYDROGRAPHS AT CP43.
 828      HC      2   13.90

 829      KK   SR43
 830      KM       STORAGE ROUTE THROUGH 4-10X8 BC'S AT STA 6366+85 ON I-10.
 831      KM       RAISE DIKE ELEVATION TO 1097.5 AND CHECK WSEL AND CAPACITY OF 4-10X8
 832      KM       BC'S WITH NO BREAKOUT FLOW OVER DIKE TO THE EAST.
 833      RS      1   STOR      0      0
 834      SV      0   .052   4.33  16.22  24.89  28.79  33.09  37.88  51.24  65.35
 835      SV  95.72
 836      SQ      0   1020   1965   3065   3600   3794   3984   4173   4521   4800
 837      SQ   5172
 838      SE  1081.2 1085.18 1087.60 1090.19  1091.5  1092.0  1092.5  1093.0  1094.0 1094.81
1                              HEC-1 INPUT                                PAGE 20

LINE      ID.......1.......2.......3.......4.......5.......6.......7.......8.......9......10

 839      SE  1096.0

 840      KK   CP43
 841      KM       DIVERT FLOW AT STA 6366+85 ON I-10 (TUTHILL DIKE).
 842      DT   DI43
 843      DI      0    920   1824   2976   3396   3536   3676   3816   4368   4644
 844      DQ      0      0      0      0      0      0      0      0      0      0
```

```
845     KK   RD43
846     KM      ROUTE REMAINDER FROM FROM CP43 TO CPWT4.
847     RS     2          -1      0
848     RC    .05    .03    .05   4000  .0083
849     RX    800    900    965   1000  1050  1100  1200  1300
850     RY   1076   1075   1075   1064  1064  1071  1071  1075

851     KK  CP43-4
852     KM      RETURN DIVERT AT CP43-4
853     DR  DI43-4

854     KK  RD43-4
855     KM      ROUTE DIVERTED FLOW FROM CP43-4 TO CPWT4
856     RS     2          -1      0
857     RC   .045    .03   .045   4200  .0067
858     RX    910    940    970    990  1000  1020  1060  1100
859     RY   1064   1063   1062   1060  1060  1062  1063  1064

860     KK  CP43-5
861     KM      RETURN DIVERT AT CP43-5
862     DR  DI43-5

863     KK  RD43-5
864     KM      ROUTE DIVERTED FLOW FROM CP43-5 TO CPWT4
865     RS     2          -1      0
866     RC   .045    .03   .045   4100  .0067
867     RX    910    940    970    990  1000  1020  1060  1100
868     RY   1064   1063   1062   1060  1060  1062  1063  1064

869     KK  I1CWT4
870     KM      ADD HYDROGRAPHS AT CPWT4
871     HC     2    .05

872     KK  CP43-6
873     KM      RETURN DIVERT AT CP43-6
874     DR  DI43-6

875     KK  RD43-6
876     KM      ROUTE DIVERTED FLOW FROM CP43-6 TO CPWT4
877     RS     2          -1      0
878     RC   .045    .03   .045   4000  .0067
879     RX    910    940    970    990  1000  1020  1060  1100
880     RY   1064   1063   1062   1060  1060  1062  1063  1064
```



```
LINE    ID.......1.......2.......3.......4.......5.......6.......7.......8.......9......10

881     KK  I2CWT4
882     KM      ADD HYDROGRAPHS AT CPWT4
883     HC     2    .07

884     KK  CP43-7
885     KM      RETURN DIVERT AT CP43-7
886     DR  DI43-7

887     KK  RD43-7
888     KM      ROUTE DIVERTED FLOW FROM CP43-7 TO CPWT4
889     RS     2          -1      0
890     RC   .045    .03   .045   4000  .0067
891     RX    910    940    970    990  1000  1020  1060  1100
892     RY   1064   1063   1062   1060  1060  1062  1063  1064

893     KK  I3CWT4
894     KM      ADD HYDROGRAPHS AT CPWT4
895     HC     2    .09

896     KK  CP43-8
897     KM      RETURN DIVERT AT CP43-8
```

```
898     DR  DI43-8

899     KK  RD43-8
900     KM      ROUTE DIVERTED FLOW FROM CP43-8 TO CPWT4
901     RS    2          -1    0
902     RC   .045    .03   .045   4000  .0067
903     RX   910    940    970    990   1000   1020   1060   1100
904     RY   1064   1063   1062   1060   1060   1062   1063   1064

905     KK  I4CWT4
906     KM      ADD HYDROGRAPHS AT CPWT4
907     HC    2    .10

908     KK    44
909     KM      RUNOFF HYDROGRAPH FROM SUB-BASIN 44
910     BA   .22
911     LG   .35    .35   4.14    .37    .00
912     UI   33.   133.   200.   301.   379.   260.   181.    98.    54.    31.
913     UI   10.    10.    10.     0.     0.     0.     0.     0.     0.     0.
914     UI    0.     0.     0.     0.     0.     0.     0.     0.     0.     0.

915     KK  I5CWT4
916     KM      ADD HYDROGRAPHS AT CPWT4
917     HC    2    .32

918     KK  I6CWT4
919     KM      ADD HYDROGRAPHS AT CPWT4.
920     HC    2   14.12
1                          HEC-1 INPUT                          PAGE 22

LINE    ID.......1.......2.......3.......4.......5.......6.......7.......8.......9......10


921     KK   45-1
922     KM      RUNOFF HYDROGRAPH FROM SUB-BASIN 45-1
923     BA   .08
924     LG   .21    .34   4.19    .38    .60
925     UI   33.   102.   189.   155.    86.    31.    13.     6.     0.     0.
926     UI    0.     0.     0.     0.     0.     0.     0.     0.     0.     0.

927     KK   CP43
928     KM      RETURN DIVERT AT CP43
929     DR   DI43

930     KK  CP45-1
931     KM      ADD HYDROGRAPHS AT CP45-1
932     HC    2    .08

933     KK  SR45-1
934     KM      STORAGE ROUTE THROUGH 1-12X12 BC, 2-42" CMP AND 3-36" CMP FROM STA. 6368
935     KM      +00 TO STA. 6375+20 ON I-10 (100' TO 800' EAST OF TUTHILL RD.).
936     RS    1   STOR     0     0
937     SV    0    .85   2.23   5.73  11.22  14.61  19.71
938     SQ    0     51    156   1200   3130   4161   5509
939     SE  1083.1 1084.78  1086.0  1087.4  1089.0  1089.5  1090.0

940     KK  CP45-1
941     KM      DIVERT FLOW AT STA 6375+20
942     DT  DI45-1
943     DI    0     51    156   1200   3130   4161   5509
944     DQ    0     51    156    305    480    543    610

945     KK   R45-1
946     KM      ROUTE REMAINDER FROM CP45-1 TO CP45
947     RS    1          -1     0
948     RC   .04    .03    .04   1200  .0042
949     RX   850    900    930    965   1000   1020   1030   1040
950     RY   1086   1085   1084   1083   1083   1086   1090   1091
```

```
951     KK    45
952     KM       RUNOFF HYDROGRAPH FROM SUB-BASIN 45
953     BA    .38
954     LG    .17    .33   3.94    .34    .20
955     UI    36.    64.   145.   190.   232.   293.   427.   384.   301.   244.
956     UI   194.   148.    82.    60.    45.    36.    13.    11.    11.    11.
957     UI    11.     0.     0.     0.     0.     0.     0.     0.     0.     0.
958     UI     0.     0.     0.     0.     0.     0.     0.     0.     0.     0.

959     KK   CP45
960     KM       ADD HYDROGRAPHS AT CP45
961     HC      2    .46
1                          HEC-1 INPUT                          PAGE 23

LINE    ID.......1.......2.......3.......4.......5.......6.......7.......8.......9......10


962     KK   SR45
963     KM       STORAGE ROUTE THROUGH 9-36" CMP'S FROM STA 6379+84 TO STA 6390+50 ON
964     KM       I-10.
965     RS      1   STOR      0      0
966     SV      0   1.84   5.95   18.55   23.27   29.04
967     SQ      0     41    132    317    1462    3517
968     SE  1081.1 1082.74  1084.0  1086.0  1086.5  1087.0

969     KK   CP45
970     KM       DIVERT FLOW AT STA 6390+50.
971     DT   DI45
972     DI      0     41    132    317    1462    3517
973     DQ      0     41    132    317     362     392

974     KK    R45
975     KM       ROUTE REMAINDER FROM CP45 TO CP46-1.
976     RS      1            -1      0
977     RC    .04    .03    .04   1500   .0031
978     RX    850    900    930    965   1000   1020   1030   1040
979     RY   1083   1082   1081   1080   1080   1082   1083   1084

980     KK   46-1
981     KM       RUNOFF HYDROGRAPH FROM SUB-BASIN 46-1
982     BA    .15
983     LG    .19    .35   4.23    .39    .60
984     UI    19.    60.   101.   133.   203.   208.   151.   111.    75.    37.
985     UI    26.    16.     6.     6.     6.     0.     0.     0.     0.     0.
986     UI     0.     0.     0.     0.     0.     0.     0.     0.     0.     0.

987     KK  CP46-1
988     KM       ADD HYDROGRAPHS AT CP46-1
989     HC      2    .61

990     KK  SR46-1
991     KM       STORAGE ROUTE THROUGH 5-36 CMP'S FROM STA 6395+75 TO STA 6400+60 ON
992     KM       I-10.
993     RS      1   STOR      0      0
994     SV      0   1.07   4.71    9.0    11.7   14.88   18.65   23.01
995     SQ      0     39    128    183     199     610    1351    2310
996     SE  1078.3  1080.0  1081.5  1082.5  1083.0  1083.5  1084.0  1084.5

997     KK  CP46-1
998     KM       DIVERT FLOW AT STA 6400+60.
999     DT  DI46-1
1000    DI      0     39    128    183     199     610    1351    2310
1001    DQ      0     39    128    183     199     210     225     244

1002    KK   R46-1
1003    KM       ROUTE REMAINDER FROM CP46-1 TO CP46.
1004    RS      1            -1      0
1005    RC    .04    .03    .04   2355   .0057
1006    RX    700    900    930    965   1000   1020   1030   1040
```

```
1007      RY   1076  1075.5   1075   1074   1074   1078   1080   1082
1                          HEC-1 INPUT                          PAGE 24

LINE      ID.......1.......2.......3.......4.......5.......6.......7.......8.......9......10


1008      KK    46
1009      KM       RUNOFF HYDROGRAPH FROM SUB-BASIN 46
1010      BA    .85
1011      LG    .19    .34   4.25    .45    .40
1012      UI    61.    61.   184.   265.   322.   373.   441.   539.   741.   706.
1013      UI   567.   488.   409.   345.   291.   208.   129.   104.    94.    61.
1014      UI    61.    19.    19.    19.    19.    19.    19.    19.     0.     0.
1015      UI     0.     0.     0.     0.     0.     0.     0.     0.     0.     0.

1016      KK  I1CP46
1017      KM       ADD HYDROGRAPHS AT CP46
1018      HC     2   1.46

1019      KK   215B
1020      KM       RUNOFF HYDROGRAPH FROM SUB-BASIN 215B
1021      BA    .10
1022      LG    .35    .33   3.94    .34    .00
1023      UI    72.   213.   293.   137.    41.    11.     0.     0.     0.     0.
1024      UI     0.     0.     0.     0.     0.     0.     0.     0.     0.     0.

1025      KK   R215B
1026      KM       ROUTE FLOW FROM CP215B TO CP232A
1027      RS     3          -1
1028      RC    .07   .035    .07   3450   .0012
1029      RX   1000   1001   1002   1010   1030   1050   1150   1290
1030      RY   1190   1190   1190   1183   1183   1184   1186   1190

1031      KK   232A
1032      KM       RUNOFF HYDROGRAPH FROM SUB-BASIN 232A
1033      BA    .61
1034      LG    .35    .33   4.08    .36    .00
1035      UI    85.   303.   478.   660.  1012.   771.   561.   388.   185.   122.
1036      UI    72.    26.    26.    26.     0.     0.     0.     0.     0.     0.
1037      UI     0.     0.     0.     0.     0.     0.     0.     0.     0.     0.

1038      KK  CP232A
1039      KM       ADD HYDROGRAPHS AT CP232A
1040      HC     2    .71

1041      KK   R232A
1042      KM       ROUTE FLOW FROM CP232A TO CP28
1043      RS     4          -1
1044      RC    .07   .035    .07   4400   .0043
1045      RX   1000   1001   1020   1030   1045   1060   1119   1120
1046      RY   1181   1181   1180   1178   1178   1180   1181   1181

1047      KK    28
1048      KM       RUNOFF HYDROGRAPH FROM SUB-BASIN 28
1049      BA    .86
1050      LG    .15    .35   4.02    .52    .10
1051      UI    76.   119.   295.   392.   470.   578.   798.   929.   711.   587.
1052      UI   473.   381.   272.   153.   127.    89.    76.    24.    23.    23.
1053      UI    23.    23.     0.     0.     0.     0.     0.     0.     0.     0.
1054      UI     0.     0.     0.     0.     0.     0.     0.     0.     0.     0.
1                          HEC-1 INPUT                          PAGE 25

LINE      ID.......1.......2.......3.......4.......5.......6.......7.......8.......9......10


1055      KK   CP28
1056      KM       ADD HYDROGRAPHS  AT CP28
1057      HC     2   1.57
```

```
1058    KK   R28
1059    KM     ROUTE FLOW FROM CP28 TO CP30
1060    RS    2          -1
1061    RC   .03   .03   .05   2400   .027
1062    RX  1000  1001  1035  1050  1065  1075  1085  1095
1063    RY  1165  1165  1164  1162  1162  1164  1166  1168

1064    KK   30
1065    KM     RUNOFF HYDROGRAPH FROM SUB-BASIN 30
1066    BA   .28
1067    LG   .15   .35   3.27   .97   .20
1068    UI   36.  116.  193.  257.  400.  380.  277.  203.  132.   63.
1069    UI   45.   26.   11.   11.   11.    0.    0.    0.    0.    0.
1070    UI    0.    0.    0.    0.    0.    0.    0.    0.    0.    0.

1071    KK 11CP30
1072    KM     ADD HYDROGRAPHS AT CP30
1073    HC    2

1074    KK   29
1075    KM     RUNOFF HYDROGRAPH FROM SUB-BASIN 29
1076    BA   .22
1077    LG   .15   .35   3.52   .78   .00
1078    UI   31.  113.  176.  245.  370.  276.  199.  135.   64.   42.
1079    UI   23.   10.   10.   10.    0.    0.    0.    0.    0.    0.
1080    UI    0.    0.    0.    0.    0.    0.    0.    0.    0.    0.

1081    KK   SR29
1082    KM     STORAGE ROUTE THROUGH RETENTION BASIN AT CP29
1083    RS    1   STOR    0    0
1084    SV    0   0.99  12.73  23.45  36.25  50.68  54.76  59.33  83.20
1085    SQ    0    0     0     0     0     0     0     88   6226
1086    SE 1164.5  1166  1170  1172  1174  1176 1177.5  1178  1180

1087    KK   R29
1088    KM     ROUTE REMAINDER OF FLOW AT CP29 TO CP30
1089    RS    1          -1    0
1090    RC   .05   .03   .05   1200  .0021
1091    RX  1000  1042  1052  1060  1082  1090  1140  1170
1092    RY  1171  1170  1168  1166  1166  1168  1170  1172

1093    KK   CP30
1094    KM     ADD HYDROGRAPHS AT CP30
1095    HC    2
```



```
LINE      ID.......1.......2.......3.......4.......5.......6.......7.......8.......9......10

1096    KK   R30
1097    KM     ROUTE COMBINED HYDROGRAPHS AT CP30 TO CP31
1098    RS    4          -1    0
1099    RC   .03   .03   .05   6770  .0069
1100    RX  1000  1025  1045  1070  1095  1110  1200  1550
1101    RY  1157  1156  1154  1152  1152  1154  1156  1158

1102    KK   31
1103    KM     RUNOFF HYDROGRAPH FROM SUB-BASIN 31
1104    BA   .71
1105    LG   .19   .35   3.76   .68   .20
1106    UI   60.   83.  224.  299.  358.  434.  565.  752.  613.  500.
1107    UI  413.  336.  268.  171.  105.   98.   60.   52.   18.   18.
1108    UI   18.   18.   18.    0.    0.    0.    0.    0.    0.    0.
1109    UI    0.    0.    0.    0.    0.    0.    0.    0.    0.    0.

1110    KK   CP31
1111    KM     ADD HYDROGRAPHS AT CP31
1112    HC    2
```

```
1113    KK   R31
1114    KM      ROUTE COMBINED HYDROGRAPH AT CP31 TO CP46
1115    RS    5          -1     0
1116    RC   .03    .03    .05   5800  .0082
1117    RX   1000   1012   1024   1035   1045   1053   1065   1098
1118    RY   1093   1092   1090   1088   1088   1090   1092   1094

1119    KK   CP46
1120    KM      ADD HYDROGRAPHS AT CP46.
1121    HC    2   4.24

1122    KK   SR46
1123    KM      STORAGE ROUTE THROUGH 5-10'X4' BC'S AT STA 6419+30 ON I-10.
1124    RS    1   STOR     0      0
1125    SV    0   1.08   3.13   4.28   5.18   7.54  12.96
1126    SQ    0    730   1460   1680   1834   2090   2420
1127    SE  1065.4 1068.42 1070.53  1071.4  1072.0  1073.0  1074.3

1128    KK   R46
1129    KM      ROUTE REMAINDER OF FLOW AT CP46 TO CPWT4
1130    RS    2          -1     0
1131    RC   .03    .03    .05   6800  .0067
1132    RX   910    930    940    950   1000   1020   1200   1400
1133    RY   1065   1064   1064   1060   1060   1064   1064   1065

1134    KK  CP45-1
1135    KM      RETURN DIVERT AT  CP45-1
1136    DR  DI45-1
```



```
LINE      ID.......1.......2.......3.......4.......5.......6.......7.......8.......9......10


1137    KK  RD45-1
1138    KM      ROUTE DIVERTED FLOW FROM CP45-1 TO CPWT4
1139    RS    2          -1     0
1140    RC   .045   .03   .045   4100  .0067
1141    RX   910    940    970    990   1000   1020   1060   1100
1142    RY   1064   1063   1062   1060   1060   1062   1063   1064

1143    KK   CP45
1144    KM      RETURN DIVERT AT CP45
1145    DR   DI45

1146    KK   RD45
1147    KM      ROUTE DIVERTED FLOW FROM  CP45  TO CPWT4.
1148    RS    2          -1     0
1149    RC   .045   .03   .045   4200  .0067
1150    RX   910    940    970    990   1000   1020   1060   1100
1151    RY   1064   1063   1062   1060   1060   1062   1063   1064

1152    KK  I7CWT4
1153    KM      ADD HYDROGRAPHS AT CPWT4
1154    HC    2   .46

1155    KK  CP46-1
1156    KM      RETURN DIVERT AT CP46-1
1157    DR  DI46-1

1158    KK  RD46-1
1159    KM      ROUTE DIVERTED FLOW FROM CP46-1 TO CPWT4
1160    RS    3          -1     0
1161    RC   .045   .03   .045   4900  .0067
1162    RX   910    940    970    990   1000   1020   1060   1100
1163    RY   1064   1063   1062   1060   1060   1062   1063   1064

1164    KK  I8CWT4
1165    KM      ADD HYDROGRAPHS AT CPWT4
1166    HC    2   .61
```

```
1167      KK    WT4
1168      KM       RUNOFF HYDROGRAPH FROM SUB-BASIN WT4
1169      BA    .77
1170      LG    .35    .35    4.17    .38    .40
1171      UI   108.   384.   604.   835.  1279.   973.   707.   488.   232.   153.
1172      UI    90.    33.    33.    33.     0.     0.     0.     0.     0.     0.
1173      UI     0.     0.     0.     0.     0.     0.     0.     0.     0.     0.

1174      KK  I9CWT4
1175      KM       ADD HYDROGRAPHS AT CPWT4
1176      HC     2   1.38
```

1 HEC-1 INPUT PAGE 28

```
LINE      ID.......1.......2.......3.......4.......5.......6.......7.......8.......9......10


1177      KK  I10WT4
1178      KM       ADD HYDROGRAPHS AT CPWT4
1179      HC     2   5.62

1180      KK   CPWT4
1181      KM       ADD ENTIRE FLOW TOGETHER THAT GETS TO WHITE TANKS STRUCTURE NO 4.
1182      HC     2   19.28

1183      KK   RS47
1184      KM       STORAGE ROUTE TROUGH WHITE TANKS STRUCTURE NO. 4.
1185      RS     1   STOR     0     0
1186      SV     0   2.81    51   148   277   543  1269  1396  1690  2045
1187      SV  2246
1188      SQ     0     0     0     0     0     0     0   375  2600  6150
1189      SQ  14700
1190      SE   997  1000  1010  1020  1030  1040  1049  1050  1052  1054
1191      SE  1055
1192      ZZ
```

1

SCHEMATIC DIAGRAM OF STREAM NETWORK

```
INPUT
 LINE    (V) ROUTING        (--->) DIVERSION OR PUMP FLOW

  NO.    (.) CONNECTOR      (<---) RETURN OF DIVERTED OR PUMPED FLOW

  28      18
          V
          V
  35      R18
          .
          .
  41      .       19
          .       .
          .       .
  48     CP19............
          V
          V
  51      R19
          .
          .
  57      .       21
          .       .
          .       .
  64    I1CP21............
          .
          .
  67      .       20
          .       V
          .       V
  74      .      SR20
          .       V
          .       V
```

```
83        .       R20
        .         .
        .         .
89      CP21............
         V
         V
92      SR21
         V
         V
98       R21
        .
        .
104       .        23
        .         .
        .         .
110     CP23............
         V
         V
113     SR23
         V
         V
122      R23
        .
        .
128       .        22
        .        V
        .        V
135       .       R22
        .         .
        .         .
141       .         .      22A
        .         .        .
        .         .        .
148       .     11C22A............
        .         .
        .         .
151     CP22A............
         V
         V
154     R22A
        .
        .
160       .        25
        .         .
        .         .
167    11CP25............
        .
        .
170       .        24
        .        V
        .        V
177       .       SR24
        .        V
        .        V
183       .       R24
        .         .
        .         .
189     CP25............
         V
         V
192     SR25
        .
        .
198       .        26
        .        V
        .        V
206       .       R26
        .         .
        .         .
```

```
212      .        .        27
         .        .        .
         .        .        .
220      .     11CP27.............
         .        V
         .        V
223      .      SR27
         .        .
         .        .
229    CP27.............
       V
       V
232    R27
       .
       .
238      .        34
         .        .
         .        .
245      .        .        33
         .        .        .
         .        .        .
252      .      CP33.............
         .        V
         .        V
255      .      R33
         .        .
         .        .
261      .        .        35
         .        .        .
         .        .        .
268      .     11CP35.............
         .        .
         .        .
271      .        .        32
         .        .        .
         .        .        .
279      .      CP35.............
         .        V
         .        V
282      .      R35
         .        .
         .        .
288      .        .        36
         .        .        .
         .        .        .
295      .     11CP36.............
         .        .
         .        .
298      .        .        37
         .        .        .
         .        .        .
306      .      CP36.............
         .        V
         .        V
309      .      R36
         .        .
         .        .
315      .        .        38
         .        .        .
         .        .        .
322      .      CP38.............
         .        V
         .        V
325      .      SR38
         .        V
         .        V
331      .      R38
         .        .
         .        .
```

```
337      .        .       39
       .        .        .
       .        .        .
345      .    I1CP39............
       .        .
       .        .
348    CP39............
       V
       V
351    R39
       .
       .
357      .       40
       .        V
       .        V
364      .       R40
       .        .
       .        .
370      .        .       42
       .        .        .
       .        .        .
378      .    I1CP42............
       .        .
       .        .
381    CP42............
       V
       V
384    SR42
       V
       V
390    R42
       .
       .
396      .      41A1
       .        V
       .        V
402      .    SR41A1
       .        .
       .        .
410      .        .-------> 1D303
408      .    CP41A1
       .        V
       .        V
413      .     R41A1
       .        .
       .        .
419      .        .      41A2
       .        .        .
       .        .        .
425      .    CP41A2............
       .        V
       .        V
428      .    SR41A2
       .        .
       .        .
436      .        .-------> 2D303
434      .    CP41A2
       .        V
       .        V
439      . -   R41A2
       .        .
       .        .
445      .        .      41A3
       .        .        .
       .        .        .
451      .    CP41A3............
       .        V
       .        V
454      .    SR41A3
```

```
        .       .
        .       .
462     .       .-------> 3D303
460     .     CP41A3
        .       V
        .       V
465     .     R41A3
        .       .
        .       .
471     .       .       41A
        .       .       .
        .       .       .
477     .     CP41A.............
        .       V
        .       V
480     .     SR41A
        .       .
        .       .
488     .       .-------> 4D303
486     .     CP41A
        .       V
        .       V
491     .     R41A
        .       .
        .       .
497     .       .       41-1
        .       .       .
        .       .       .
504     .     CP41-1............
        .       V
        .       V
507     .     SR41-1
        .       .
        .       .
515     .       .-------> 5D303
513     .     CP41-1
        .       V
        .       V
518     .     R41-1
        .       .
        .       .
524     .       .       41-2
        .       .       .
        .       .       .
531     .     CP41-2............
        .       V
        .       V
534     .     SR41-2
        .       .
        .       .
545     .       .-------> 6D303
543     .     CP41-2
        .       V
        .       V
550     .     R41-2
        .       .
        .       .
556     .       .       41
        .       .       .
        .       .       .
564     .     CP41.............
        .       V
        .       V
567     .     SR41
        .       .
        .       .
578     .       .-------> 7D303
576     .     CP41
        .       V
```

```
        .      V
583     .      R41
        .      .
        .      .
589     .      .      43-1
        .      .      .
        .      .      .
595     .    CP43-1.............
        .      V
        .      V
598     .    SR43-1
        .      .
        .      .
609     .      .-------> 1D303A
607     .    CP43-1
        .      V
        .      V
614     .    R43-1
        .      .
        .      .
620     .      .      43-2
        .      .      .
        .      .      .
626     .    CP43-2.............
        .      V
        .      V
629     .    SR43-2
        .      .
        .      .
637     .      .-------> 2D303A
635     .    CP43-2
        .      V
        .      V
640     .    R43-2
        .      .
        .      .
646     .      .      43-3
        .      .      .
        .      .      .
652     .    CP43-3.............
        .      V
        .      V
655     .    SR43-3
        .      .
        .      .
663     .      .-------> 3D303A
661     .    CP43-3
        .      V
        .      V
666     .    R43-3
        .      .
        .      .
672     .      .      43-4
        .      .      .
        .      .      .
678     .    CP43-4.............
        .      V
        .      V
681     .    SR43-4
        .      .
        .      .
689     .      .-------> DI43-4
687     .    CP43-4
        .      V
        .      V
692     .    R43-4
        .      .
        .      .
698     .      .      43-5
```

```
        .       .       .
        .       .       .
704     .   CP43-5............
        .     V
        .     V
707     .   SR43-5
        .       .
        .       .
718     .       .-------> DI43-5
716     .   CP43-5
        .     V
        .     V
723     .   R43-5
        .       .
        .       .
729     .       .     43-6
        .       .       .
        .       .       .
735     .   CP43-6............
        .     V
        .     V
738     .   SR43-6
        .       .
        .       .
749     .       .-------> DI43-6
747     .   CP43-6
        .     V
        .     V
754     .   R43-6
        .       .
        .       .
760     .       .     43-7
        .       .       .
        .       .       .
766     .   CP43-7............
        .     V
        .     V
769     .   SR43-7
        .       .
        .       .
777     .       .-------> DI43-7
775     .   CP43-7
        .     V
        .     V
780     .   R43-7
        .       .
        .       .
786     .       .     43-8
        .       .       .
        .       .       .
792     .   CP43-8............
        .     V
        .     V
795     .   SR43-8
        .       .
        .       .
806     .       .-------> DI43-8
804     .   CP43-8
        .     V
        .     V
811     .   R43-8
        .       .
        .       .
817     .       .      43
        .       .       .
        .       .       .
823     .   I1CP43............
        .       .
        .       .
```

```
826   CP43............
       V
       V
829   SR43
       .
       .
842     .-------->  DI43
840   CP43
       V
       V
845   RD43
       .
       .
853     .       .<-------  DI43-4
851     .   CP43-4
       .      V
       .      V
854     .   RD43-4
       .      .
       .      .
862     .      .       .<-------  DI43-5
860     .      .   CP43-5
       .      .      V
       .      .      V
863     .      .   RD43-5
       .      .      .
       .      .      .
869     .   I1CWT4............
       .      .
       .      .
874     .      .       .<-------  DI43-6
872     .      .   CP43-6
       .      .      V
       .      .      V
875     .      .   RD43-6
       .      .      .
       .      .      .
881     .   I2CWT4............
       .      .
       .      .
886     .      .       .<-------  DI43-7
884     .      .   CP43-7
       .      .      V
       .      .      V
887     .      .   RD43-7
       .      .      .
       .      .      .
893     .   I3CWT4............
       .      .
       .      .
898     .      .       .<-------  DI43-8
896     .      .   CP43-8
       .      .      V
       .      .      V
899     .      .   RD43-8
       .      .      .
       .      .      .
905     .   I4CWT4............
       .      .
       .      .
908     .      .      44
       .      .      .
       .      .      .
915     .   I5CWT4............
       .      .
       .      .
918   I6CWT4............
       .
       .
```

```
921     .     45-1
        .       .
        .       .
929     .       .       .<-------   DI43
927     .       .     CP43
        .       .       .
        .       .       .
930     .   CP45-1............
        .     V
        .     V
933     .   SR45-1
        .       .
        .       .
942     .       .------->  DI45-1
940     .   CP45-1
        .     V
        .     V
945     .   R45-1
        .       .
        .       .
951     .       .       45
        .       .       .
        .       .       .
959     .   CP45............
        .     V
        .     V
962     .   SR45
        .       .
        .       .
971     .       .------->   DI45
969     .   CP45
        .     V
        .     V
974     .   R45
        .       .
        .       .
980     .       .     46-1
        .       .       .
        .       .       .
987     .   CP46-1............
        .     V
        .     V
990     .   SR46-1
        .       .
        .       .
999     .       .------->  DI46-1
997     .   CP46-1
        .     V
        .     V
1002    .   R46-1
        .       .
        .       .
1008    .       .       46
        .       .       .
        .       .       .
1016    .   11CP46............
        .       .
        .       .
1019    .       .     215B
        .       .       V
        .       .       V
1025    .       .     R215B
        .       .       .
        .       .       .
1031    .       .       .       232A
        .       .       .       .
        .       .       .       .
1038    .       .     CP232A............
        .       .       V
```

```
        .       .       V
1041    .       ..      R232A
        .       .       .
        .       .       .
1047    .       .       .       28
        .       .       .       .
        .       .       .       .
1055    .       .       CP28............
        .       .       V
        .       .       V
1058    .       .       R28
        .       .       .
        .       .       .
1064    .       .       .       30
        .       .       .       .
        .       .       .       .
1071    .       .       I1CP30............
        .       .       .
        .       .       .
1074    .       .       .       29
        .       .       .       V
        .       .       .       V
1081    .       .       .       SR29
        .       .       .       V
        .       .       .       V
1087    .       .       .       R29
        .       .       .       .
        .       .       .       .
1093    .       .       CP30............
        .       .       V
        .       .       V
1096    .       .       R30
        .       .       .
        .       .       .
1102    .       .       .       31
        .       .       .       .
        .       .       .       .
1110    .       .       CP31............
        .       .       V
        .       .       V
1113    .       .       R31
        .       .       .
        .       .       .
1119    .       CP46............
        .       V
        .       V
1122    .       SR46
        .       V
        .       V
1128    .       R46
        .       .
        .       .
1136    .       .       .<-------  DI45-1
1134    .       .       CP45-1
        .       .       V
        .       .       V
1137    .       .       RD45-1
        .       .       .
        .       .       .
1145    .       .       .       .<-------   DI45
1143    .       .       .       CP45
        .       .       .       V
        .       .       .       V
1146    .       .       .       RD45
        .       .       .       .
        .       .       .       .
1152    .       .       I7CWT4............
        .       .       .
        .       .       .
```

```
1157      .      .      .      .<------- DI46-1
1155      .      .      .    CP46-1
        .      .      .      V
        .      .      .      V
1158      .      .      .    RD46-1
        .      .      .      .
        .      .      .      .
1164      .      .   I8CWT4............
        .      .      .
        .      .      .
1167      .      .      .      WT4
        .      .      .      .
        .      .      .      .
1174      .      .   I9CWT4............
        .      .      .
        .      .      .
1177      .    I10WT4............
        .      .
        .      .
1180    CPWT4............
        V
        V
1183    RS47
```

(***) RUNOFF ALSO COMPUTED AT THIS LOCATION

```
1*****************************************                    *****************************************
*                                         *                    *                                         *
*  FLOOD HYDROGRAPH PACKAGE  (HEC-1)      *                    *      U.S. ARMY CORPS OF ENGINEERS       *
*        SEPTEMBER 1990                   *                    *   HYDROLOGIC ENGINEERING CENTER         *
*         VERSION 4.0                     *                    *        609 SECOND STREET                *
*                                         *                    *     DAVIS, CALIFORNIA 95616             *
* RUN DATE  04/14/1993  TIME  08:07:32    *                    *          (916) 756-1104               *
*                                         *                    *                                         *
*****************************************                    *****************************************
```

HYDROLOGY RUN FOR WHITE TANKS ADMS --- WATERSHED CONTRIBUTING TO WT#4
100-YEAR, 24-HOUR STORM TUT4.
NO BREAKOUTAT TUTHILL DIKE OR ALONG JACKRABBIT TRAIL. ALL FLOW IS
CONVEYED TO WT#4.

```
11 IO        OUTPUT CONTROL VARIABLES
               IPRNT         5  PRINT CONTROL
               IPLOT         0  PLOT CONTROL
               QSCAL        0.  HYDROGRAPH PLOT SCALE

  IT        HYDROGRAPH TIME DATA
               NMIN         5  MINUTES IN COMPUTATION INTERVAL
              IDATE     1    0  STARTING DATE
              ITIME      0000  STARTING TIME
                 NQ       300  NUMBER OF HYDROGRAPH ORDINATES
             NDDATE     2    0  ENDING DATE
             NDTIME      0055  ENDING TIME
             ICENT        19  CENTURY MARK

           COMPUTATION INTERVAL     .08 HOURS
              TOTAL TIME BASE   24.92 HOURS

       ENGLISH UNITS
          DRAINAGE AREA        SQUARE MILES
          PRECIPITATION DEPTH   INCHES
```

LENGTH, ELEVATION FEET
FLOW CUBIC FEET PER SECOND
STORAGE VOLUME ACRE-FEET
SURFACE AREA ACRES
TEMPERATURE DEGREES FAHRENHEIT

13 JD INDEX STORM NO. 1
STRM 4.03 PRECIPITATION DEPTH
TRDA .00 TRANSPOSITION DRAINAGE AREA

14 PI PRECIPITATION PATTERN

.00	.00	.00	.00	.00	.00	.00	.00	.00	.00
.00	.00	.00	.00	.00	.00	.00	.00	.00	.00
.00	.00	.00	.00	.00	.00	.00	.00	.00	.00
.00	.00	.00	.00	.00	.00	.00	.00	.00	.00
.00	.00	.00	.00	.00	.00	.00	.00	.00	.00
.00	.00	.00	.00	.00	.00	.00	.00	.00	.00
.00	.00	.00	.00	.00	.00	.00	.00	.00	.00
.00	.00	.00	.00	.00	.00	.00	.00	.00	.00
.00	.00	.00	.00	.00	.00	.00	.00	.00	.00
.00	.00	.00	.00	.00	.00	.00	.00	.00	.00
.00	.00	.00	.00	.00	.00	.00	.00	.00	.00
.00	.00	.00	.00	.00	.00	.00	.00	.00	.00
.00	.00	.00	.00	.00	.00	.00	.01	.00	.01
.01	.01	.01	.01	.01	.01	.01	.01	.03	.03
.03	.09	.09	.09	.01	.01	.01	.01	.01	.01
.01	.01	.01	.01	.01	.01	.00	.00	.00	.00
.00	.00	.00	.00	.00	.00	.00	.00	.00	.00
.00	.00	.00	.00	.00	.00	.00	.00	.00	.00
.00	.00	.00	.00	.00	.00	.00	.00	.00	.00
.00	.00	.00	.00	.00	.00	.00	.00	.00	.00
.00	.00	.00	.00	.00	.00	.00	.00	.00	.00
.00	.00	.00	.00	.00	.00	.00	.00	.00	.00
.00	.00	.00	.00	.00	.00	.00	.00	.00	.00
.00	.00	.00	.00	.00	.00	.00	.00	.00	.00
.00	.00	.00	.00	.00	.00	.00	.00	.00	.00
.00	.00	.00	.00	.00	.00	.00	.00	.00	.00
.00	.00	.00	.00	.00	.00	.00	.00	.00	.00
.00	.00	.00	.00	.00	.00	.00	.00		

24 JD INDEX STORM NO. 2
STRM 3.99 PRECIPITATION DEPTH
TRDA 10.00 TRANSPOSITION DRAINAGE AREA

0 PI PRECIPITATION PATTERN

.00	.00	.00	.00	.00	.00	.00	.00	.00	.00
.00	.00	.00	.00	.00	.00	.00	.00	.00	.00
.00	.00	.00	.00	.00	.00	.00	.00	.00	.00
.00	.00	.00	.00	.00	.00	.00	.00	.00	.00
.00	.00	.00	.00	.00	.00	.00	.00	.00	.00
.00	.00	.00	.00	.00	.00	.00	.00	.00	.00
.00	.00	.00	.00	.00	.00	.00	.00	.00	.00
.00	.00	.00	.00	.00	.00	.00	.00	.00	.00
.00	.00	.00	.00	.00	.00	.00	.00	.00	.00
.00	.00	.00	.00	.00	.00	.00	.00	.00	.00
.00	.00	.00	.00	.00	.00	.00	.00	.00	.00
.00	.00	.00	.00	.00	.00	.00	.00	.00	.00
.00	.00	.00	.00	.00	.00	.00	.01	.00	.01
.01	.01	.01	.01	.01	.01	.01	.01	.03	.03
.03	.09	.09	.09	.01	.01	.01	.01	.01	.01
.01	.01	.01	.01	.01	.01	.00	.00	.00	.00
.00	.00	.00	.00	.00	.00	.00	.00	.00	.00
.00	.00	.00	.00	.00	.00	.00	.00	.00	.00
.00	.00	.00	.00	.00	.00	.00	.00	.00	.00
.00	.00	.00	.00	.00	.00	.00	.00	.00	.00
.00	.00	.00	.00	.00	.00	.00	.00	.00	.00
.00	.00	.00	.00	.00	.00	.00	.00	.00	.00
.00	.00	.00	.00	.00	.00	.00	.00	.00	.00
.00	.00	.00	.00	.00	.00	.00	.00	.00	.00
.00	.00	.00	.00	.00	.00	.00	.00	.00	.00
.00	.00	.00	.00	.00	.00	.00	.00	.00	.00

.00	.00	.00	.00	.00	.00	.00	.00	.00	.00
.00	.00	.00	.00	.00	.00	.00	.00	.00	.00
.00	.00	.00	.00	.00	.00	.00	.00	.00	.00
.00	.00	.00	.00	.00	.00	.00	.00	.00	.00
.00	.00	.00	.00	.00	.00	.00	.00	.00	.00
.00	.00	.00	.00	.00	.00	.00	.00		

25 JD INDEX STORM NO. 3
STRM 3.83 PRECIPITATION DEPTH
TRDA 50.00 TRANSPOSITION DRAINAGE AREA

0 PI PRECIPITATION PATTERN

.00	.00	.00	.00	.00	.00	.00	.00	.00	.00
.00	.00	.00	.00	.00	.00	.00	.00	.00	.00
.00	.00	.00	.00	.00	.00	.00	.00	.00	.00
.00	.00	.00	.00	.00	.00	.00	.00	.00	.00
.00	.00	.00	.00	.00	.00	.00	.00	.00	.00
.00	.00	.00	.00	.00	.00	.00	.00	.00	.00
.00	.00	.00	.00	.00	.00	.00	.00	.00	.00
.00	.00	.00	.00	.00	.00	.00	.00	.00	.00
.00	.00	.00	.00	.00	.00	.00	.00	.00	.00
.00	.00	.00	.00	.00	.00	.00	.00	.00	.00
.00	.00	.00	.00	.00	.00	.00	.00	.00	.00
.00	.00	.00	.00	.00	.00	.00	.00	.00	.00
.00	.00	.00	.00	.00	.00	.00	.00	.00	.00
.00	.00	.00	.00	.00	.00	.00	.01	.00	.01
.01	.01	.01	.01	.01	.01	.01	.01	.03	.03
.03	.09	.09	.09	.01	.01	.01	.01	.01	.01
.01	.01	.01	.01	.01	.01	.00	.00	.00	.00
.00	.00	.00	.00	.00	.00	.00	.00	.00	.00
.00	.00	.00	.00	.00	.00	.00	.00	.00	.00
.00	.00	.00	.00	.00	.00	.00	.00	.00	.00
.00	.00	.00	.00	.00	.00	.00	.00	.00	.00
.00	.00	.00	.00	.00	.00	.00	.00	.00	.00
.00	.00	.00	.00	.00	.00	.00	.00	.00	.00
.00	.00	.00	.00	.00	.00	.00	.00	.00	.00
.00	.00	.00	.00	.00	.00	.00	.00	.00	.00
.00	.00	.00	.00	.00	.00	.00	.00	.00	.00
.00	.00	.00	.00	.00	.00	.00	.00	.00	.00
.00	.00	.00	.00	.00	.00	.00	.00	.00	.00
.00	.00	.00	.00	.00	.00	.00	.00		

26 JD INDEX STORM NO. 4
STRM 3.76 PRECIPITATION DEPTH
TRDA 100.00 TRANSPOSITION DRAINAGE AREA

0 PI PRECIPITATION PATTERN

.00	.00	.00	.00	.00	.00	.00	.00	.00	.00
.00	.00	.00	.00	.00	.00	.00	.00	.00	.00
.00	.00	.00	.00	.00	.00	.00	.00	.00	.00
.00	.00	.00	.00	.00	.00	.00	.00	.00	.00
.00	.00	.00	.00	.00	.00	.00	.00	.00	.00
.00	.00	.00	.00	.00	.00	.00	.00	.00	.00
.00	.00	.00	.00	.00	.00	.00	.00	.00	.00
.00	.00	.00	.00	.00	.00	.00	.00	.00	.00
.00	.00	.00	.00	.00	.00	.00	.00	.00	.00
.00	.00	.00	.00	.00	.00	.00	.00	.00	.00
.00	.00	.00	.00	.00	.00	.00	.00	.00	.00
.00	.00	.00	.00	.00	.00	.00	.00	.00	.00
.00	.00	.00	.00	.00	.00	.00	.01	.00	.01
.01	.01	.01	.01	.01	.01	.01	.01	.03	.03
.03	.09	.09	.09	.01	.01	.01	.01	.01	.01
.01	.01	.01	.01	.01	.01	.00	.00	.00	.00
.00	.00	.00	.00	.00	.00	.00	.00	.00	.00
.00	.00	.00	.00	.00	.00	.00	.00	.00	.00
.00	.00	.00	.00	.00	.00	.00	.00	.00	.00
.00	.00	.00	.00	.00	.00	.00	.00	.00	.00
.00	.00	.00	.00	.00	.00	.00	.00	.00	.00
.00	.00	.00	.00	.00	.00	.00	.00	.00	.00

.00	.00	.00	.00	.00	.00	.00	.00	.00	.00
.00	.00	.00	.00	.00	.00	.00	.00	.00	.00
.00	.00	.00	.00	.00	.00	.00	.00	.00	.00
.00	.00	.00	.00	.00	.00	.00	.00	.00	.00
.00	.00	.00	.00	.00	.00	.00	.00	.00	.00
.00	.00	.00	.00	.00	.00	.00	.00	.00	.00
.00	.00	.00	.00	.00	.00	.00	.00		

27 JD INDEX STORM NO. 5
STRM 3.70 PRECIPITATION DEPTH
TRDA 200.00 TRANSPOSITION DRAINAGE AREA

0 PI PRECIPITATION PATTERN

.00	.00	.00	.00	.00	.00	.00	.00	.00	.00
.00	.00	.00	.00	.00	.00	.00	.00	.00	.00
.00	.00	.00	.00	.00	.00	.00	.00	.00	.00
.00	.00	.00	.00	.00	.00	.00	.00	.00	.00
.00	.00	.00	.00	.00	.00	.00	.00	.00	.00
.00	.00	.00	.00	.00	.00	.00	.00	.00	.00
.00	.00	.00	.00	.00	.00	.00	.00	.00	.00
.00	.00	.00	.00	.00	.00	.00	.00	.00	.00
.00	.00	.00	.00	.00	.00	.00	.00	.00	.00
.00	.00	.00	.00	.00	.00	.00	.00	.00	.00
.00	.00	.00	.00	.00	.00	.00	.00	.00	.00
.00	.00	.00	.00	.00	.00	.00	.00	.00	.00
.00	.00	.00	.00	.00	.00	.00	.01	.00	.01
.01	.01	.01	.01	.01	.01	.01	.01	.03	.03
.03	.09	.09	.09	.01	.01	.01	.01	.01	.01
.01	.01	.01	.01	.01	.01	.00	.00	.00	.00
.00	.00	.00	.00	.00	.00	.00	.00	.00	.00
.00	.00	.00	.00	.00	.00	.00	.00	.00	.00
.00	.00	.00	.00	.00	.00	.00	.00	.00	.00
.00	.00	.00	.00	.00	.00	.00	.00	.00	.00
.00	.00	.00	.00	.00	.00	.00	.00	.00	.00
.00	.00	.00	.00	.00	.00	.00	.00	.00	.00
.00	.00	.00	.00	.00	.00	.00	.00	.00	.00
.00	.00	.00	.00	.00	.00	.00	.00	.00	.00
.00	.00	.00	.00	.00	.00	.00	.00	.00	.00
.00	.00	.00	.00	.00	.00	.00	.00	.00	.00
.00	.00	.00	.00	.00	.00	.00	.00	.00	.00
.00	.00	.00	.00	.00	.00	.00	.00	.00	.00
.00	.00	.00	.00	.00	.00	.00	.00	.00	.00
.00	.00	.00	.00	.00	.00	.00	.00	.00	.00
.00	.00	.00	.00	.00	.00	.00	.00	.00	.00
.00	.00	.00	.00	.00	.00	.00	.00	.00	.00
.00	.00	.00	.00	.00	.00	.00	.00	.00	.00
.00	.00	.00	.00	.00	.00	.00	.00	.00	.00
.00	.00	.00	.00	.00	.00	.00	.00	.00	.00
.00	.00	.00	.00	.00	.00	.00	.00	.00	.00
.00	.00	.00	.00	.00	.00	.00	.00	.00	.00
.00	.00	.00	.00	.00	.00	.00	.00		

WARNING --- ROUTED OUTFLOW (615.) IS GREATER THAN MAXIMUM OUTFLOW (503.) IN STORAGE-OUTFLOW TABLE

WARNING --- ROUTED OUTFLOW (763.) IS GREATER THAN MAXIMUM OUTFLOW (503.) IN STORAGE-OUTFLOW TABLE

WARNING --- ROUTED OUTFLOW (826.) IS GREATER THAN MAXIMUM OUTFLOW (503.) IN STORAGE-OUTFLOW TABLE

WARNING --- ROUTED OUTFLOW (769.) IS GREATER THAN MAXIMUM OUTFLOW (503.) IN STORAGE-OUTFLOW TABLE

WARNING --- ROUTED OUTFLOW (622.) IS GREATER THAN MAXIMUM OUTFLOW (503.) IN STORAGE-OUTFLOW TABLE

WARNING --- ROUTED OUTFLOW (612.) IS GREATER THAN MAXIMUM OUTFLOW (503.) IN STORAGE-OUTFLOW TABLE

WARNING --- ROUTED OUTFLOW (732.) IS GREATER THAN MAXIMUM OUTFLOW (503.) IN STORAGE-OUTFLOW TABLE

WARNING --- ROUTED OUTFLOW (775.) IS GREATER THAN MAXIMUM OUTFLOW (503.) IN STORAGE-OUTFLOW TABLE

WARNING --- ROUTED OUTFLOW (723.) IS GREATER THAN MAXIMUM OUTFLOW (503.) IN STORAGE-OUTFLOW TABLE

WARNING --- ROUTED OUTFLOW (603.) IS GREATER THAN MAXIMUM OUTFLOW (503.) IN STORAGE-OUTFLOW TABLE

WARNING --- ROUTED OUTFLOW (604.) IS GREATER THAN MAXIMUM OUTFLOW (503.) IN STORAGE-OUTFLOW TABLE

WARNING --- ROUTED OUTFLOW (703.) IS GREATER THAN MAXIMUM OUTFLOW (503.) IN STORAGE-OUTFLOW TABLE

WARNING --- ROUTED OUTFLOW (733.) IS GREATER THAN MAXIMUM OUTFLOW (503.) IN STORAGE-OUTFLOW TABLE

```
WARNING --- ROUTED OUTFLOW (  687.) IS GREATER THAN MAXIMUM OUTFLOW (  503.) IN STORAGE-OUTFLOW TABLE
WARNING --- ROUTED OUTFLOW (  585.) IS GREATER THAN MAXIMUM OUTFLOW (  503.) IN STORAGE-OUTFLOW TABLE
WARNING --- ROUTED OUTFLOW (  594.) IS GREATER THAN MAXIMUM OUTFLOW (  503.) IN STORAGE-OUTFLOW TABLE
WARNING --- ROUTED OUTFLOW (  676.) IS GREATER THAN MAXIMUM OUTFLOW (  503.) IN STORAGE-OUTFLOW TABLE
WARNING --- ROUTED OUTFLOW (  698.) IS GREATER THAN MAXIMUM OUTFLOW (  503.) IN STORAGE-OUTFLOW TABLE
WARNING --- ROUTED OUTFLOW (  657.) IS GREATER THAN MAXIMUM OUTFLOW (  503.) IN STORAGE-OUTFLOW TABLE
WARNING --- ROUTED OUTFLOW (  568.) IS GREATER THAN MAXIMUM OUTFLOW (  503.) IN STORAGE-OUTFLOW TABLE
WARNING --- ROUTED OUTFLOW (  605.) IS GREATER THAN MAXIMUM OUTFLOW (  503.) IN STORAGE-OUTFLOW TABLE
WARNING --- ROUTED OUTFLOW (  751.) IS GREATER THAN MAXIMUM OUTFLOW (  503.) IN STORAGE-OUTFLOW TABLE
WARNING --- ROUTED OUTFLOW (  814.) IS GREATER THAN MAXIMUM OUTFLOW (  503.) IN STORAGE-OUTFLOW TABLE
WARNING --- ROUTED OUTFLOW (  758.) IS GREATER THAN MAXIMUM OUTFLOW (  503.) IN STORAGE-OUTFLOW TABLE
WARNING --- ROUTED OUTFLOW (  613.) IS GREATER THAN MAXIMUM OUTFLOW (  503.) IN STORAGE-OUTFLOW TABLE
WARNING --- ROUTED OUTFLOW (  602.) IS GREATER THAN MAXIMUM OUTFLOW (  503.) IN STORAGE-OUTFLOW TABLE
WARNING --- ROUTED OUTFLOW (  720.) IS GREATER THAN MAXIMUM OUTFLOW (  503.) IN STORAGE-OUTFLOW TABLE
WARNING --- ROUTED OUTFLOW (  764.) IS GREATER THAN MAXIMUM OUTFLOW (  503.) IN STORAGE-OUTFLOW TABLE
WARNING --- ROUTED OUTFLOW (  712.) IS GREATER THAN MAXIMUM OUTFLOW (  503.) IN STORAGE-OUTFLOW TABLE
WARNING --- ROUTED OUTFLOW (  594.) IS GREATER THAN MAXIMUM OUTFLOW (  503.) IN STORAGE-OUTFLOW TABLE
WARNING --- ROUTED OUTFLOW (  595.) IS GREATER THAN MAXIMUM OUTFLOW (  503.) IN STORAGE-OUTFLOW TABLE
WARNING --- ROUTED OUTFLOW (  692.) IS GREATER THAN MAXIMUM OUTFLOW (  503.) IN STORAGE-OUTFLOW TABLE
WARNING --- ROUTED OUTFLOW (  722.) IS GREATER THAN MAXIMUM OUTFLOW (  503.) IN STORAGE-OUTFLOW TABLE
WARNING --- ROUTED OUTFLOW (  677.) IS GREATER THAN MAXIMUM OUTFLOW (  503.) IN STORAGE-OUTFLOW TABLE
WARNING --- ROUTED OUTFLOW (  577.) IS GREATER THAN MAXIMUM OUTFLOW (  503.) IN STORAGE-OUTFLOW TABLE
WARNING --- ROUTED OUTFLOW (  585.) IS GREATER THAN MAXIMUM OUTFLOW (  503.) IN STORAGE-OUTFLOW TABLE
WARNING --- ROUTED OUTFLOW (  665.) IS GREATER THAN MAXIMUM OUTFLOW (  503.) IN STORAGE-OUTFLOW TABLE
WARNING --- ROUTED OUTFLOW (  688.) IS GREATER THAN MAXIMUM OUTFLOW (  503.) IN STORAGE-OUTFLOW TABLE
WARNING --- ROUTED OUTFLOW (  647.) IS GREATER THAN MAXIMUM OUTFLOW (  503.) IN STORAGE-OUTFLOW TABLE
WARNING --- ROUTED OUTFLOW (  560.) IS GREATER THAN MAXIMUM OUTFLOW (  503.) IN STORAGE-OUTFLOW TABLE
WARNING --- ROUTED OUTFLOW (  563.) IS GREATER THAN MAXIMUM OUTFLOW (  503.) IN STORAGE-OUTFLOW TABLE
WARNING --- ROUTED OUTFLOW (  702.) IS GREATER THAN MAXIMUM OUTFLOW (  503.) IN STORAGE-OUTFLOW TABLE
WARNING --- ROUTED OUTFLOW (  763.) IS GREATER THAN MAXIMUM OUTFLOW (  503.) IN STORAGE-OUTFLOW TABLE
WARNING --- ROUTED OUTFLOW (  713.) IS GREATER THAN MAXIMUM OUTFLOW (  503.) IN STORAGE-OUTFLOW TABLE
WARNING --- ROUTED OUTFLOW (  576.) IS GREATER THAN MAXIMUM OUTFLOW (  503.) IN STORAGE-OUTFLOW TABLE
WARNING --- ROUTED OUTFLOW (  561.) IS GREATER THAN MAXIMUM OUTFLOW (  503.) IN STORAGE-OUTFLOW TABLE
WARNING --- ROUTED OUTFLOW (  674.) IS GREATER THAN MAXIMUM OUTFLOW (  503.) IN STORAGE-OUTFLOW TABLE
WARNING --- ROUTED OUTFLOW (  716.) IS GREATER THAN MAXIMUM OUTFLOW (  503.) IN STORAGE-OUTFLOW TABLE
```

```
WARNING --- ROUTED OUTFLOW (  669.) IS GREATER THAN MAXIMUM OUTFLOW (  503.) IN STORAGE-OUTFLOW TABLE
WARNING --- ROUTED OUTFLOW (  559.) IS GREATER THAN MAXIMUM OUTFLOW (  503.) IN STORAGE-OUTFLOW TABLE
WARNING --- ROUTED OUTFLOW (  556.) IS GREATER THAN MAXIMUM OUTFLOW (  503.) IN STORAGE-OUTFLOW TABLE
WARNING --- ROUTED OUTFLOW (  647.) IS GREATER THAN MAXIMUM OUTFLOW (  503.) IN STORAGE-OUTFLOW TABLE
WARNING --- ROUTED OUTFLOW (  677.) IS GREATER THAN MAXIMUM OUTFLOW (  503.) IN STORAGE-OUTFLOW TABLE
WARNING --- ROUTED OUTFLOW (  636.) IS GREATER THAN MAXIMUM OUTFLOW (  503.) IN STORAGE-OUTFLOW TABLE
WARNING --- ROUTED OUTFLOW (  542.) IS GREATER THAN MAXIMUM OUTFLOW (  503.) IN STORAGE-OUTFLOW TABLE
WARNING --- ROUTED OUTFLOW (  547.) IS GREATER THAN MAXIMUM OUTFLOW (  503.) IN STORAGE-OUTFLOW TABLE
WARNING --- ROUTED OUTFLOW (  623.) IS GREATER THAN MAXIMUM OUTFLOW (  503.) IN STORAGE-OUTFLOW TABLE
WARNING --- ROUTED OUTFLOW (  645.) IS GREATER THAN MAXIMUM OUTFLOW (  503.) IN STORAGE-OUTFLOW TABLE
WARNING --- ROUTED OUTFLOW (  608.) IS GREATER THAN MAXIMUM OUTFLOW (  503.) IN STORAGE-OUTFLOW TABLE
WARNING --- ROUTED OUTFLOW (  525.) IS GREATER THAN MAXIMUM OUTFLOW (  503.) IN STORAGE-OUTFLOW TABLE
WARNING --- ROUTED OUTFLOW (  545.) IS GREATER THAN MAXIMUM OUTFLOW (  503.) IN STORAGE-OUTFLOW TABLE
WARNING --- ROUTED OUTFLOW (  680.) IS GREATER THAN MAXIMUM OUTFLOW (  503.) IN STORAGE-OUTFLOW TABLE
WARNING --- ROUTED OUTFLOW (  741.) IS GREATER THAN MAXIMUM OUTFLOW (  503.) IN STORAGE-OUTFLOW TABLE
WARNING --- ROUTED OUTFLOW (  693.) IS GREATER THAN MAXIMUM OUTFLOW (  503.) IN STORAGE-OUTFLOW TABLE
WARNING --- ROUTED OUTFLOW (  561.) IS GREATER THAN MAXIMUM OUTFLOW (  503.) IN STORAGE-OUTFLOW TABLE
WARNING --- ROUTED OUTFLOW (  544.) IS GREATER THAN MAXIMUM OUTFLOW (  503.) IN STORAGE-OUTFLOW TABLE
WARNING --- ROUTED OUTFLOW (  654.) IS GREATER THAN MAXIMUM OUTFLOW (  503.) IN STORAGE-OUTFLOW TABLE
WARNING --- ROUTED OUTFLOW (  695.) IS GREATER THAN MAXIMUM OUTFLOW (  503.) IN STORAGE-OUTFLOW TABLE
WARNING --- ROUTED OUTFLOW (  650.) IS GREATER THAN MAXIMUM OUTFLOW (  503.) IN STORAGE-OUTFLOW TABLE
WARNING --- ROUTED OUTFLOW (  543.) IS GREATER THAN MAXIMUM OUTFLOW (  503.) IN STORAGE-OUTFLOW TABLE
WARNING --- ROUTED OUTFLOW (  539.) IS GREATER THAN MAXIMUM OUTFLOW (  503.) IN STORAGE-OUTFLOW TABLE
WARNING --- ROUTED OUTFLOW (  628.) IS GREATER THAN MAXIMUM OUTFLOW (  503.) IN STORAGE-OUTFLOW TABLE
WARNING --- ROUTED OUTFLOW (  657.) IS GREATER THAN MAXIMUM OUTFLOW (  503.) IN STORAGE-OUTFLOW TABLE
WARNING --- ROUTED OUTFLOW (  618.) IS GREATER THAN MAXIMUM OUTFLOW (  503.) IN STORAGE-OUTFLOW TABLE
WARNING --- ROUTED OUTFLOW (  527.) IS GREATER THAN MAXIMUM OUTFLOW (  503.) IN STORAGE-OUTFLOW TABLE
WARNING --- ROUTED OUTFLOW (  531.) IS GREATER THAN MAXIMUM OUTFLOW (  503.) IN STORAGE-OUTFLOW TABLE
WARNING --- ROUTED OUTFLOW (  605.) IS GREATER THAN MAXIMUM OUTFLOW (  503.) IN STORAGE-OUTFLOW TABLE
WARNING --- ROUTED OUTFLOW (  626.) IS GREATER THAN MAXIMUM OUTFLOW (  503.) IN STORAGE-OUTFLOW TABLE
WARNING --- ROUTED OUTFLOW (  591.) IS GREATER THAN MAXIMUM OUTFLOW (  503.) IN STORAGE-OUTFLOW TABLE
WARNING --- ROUTED OUTFLOW (  510.) IS GREATER THAN MAXIMUM OUTFLOW (  503.) IN STORAGE-OUTFLOW TABLE
WARNING --- ROUTED OUTFLOW (  529.) IS GREATER THAN MAXIMUM OUTFLOW (  503.) IN STORAGE-OUTFLOW TABLE
WARNING --- ROUTED OUTFLOW (  662.) IS GREATER THAN MAXIMUM OUTFLOW (  503.) IN STORAGE-OUTFLOW TABLE
WARNING --- ROUTED OUTFLOW (  722.) IS GREATER THAN MAXIMUM OUTFLOW (  503.) IN STORAGE-OUTFLOW TABLE
```

```
WARNING --- ROUTED OUTFLOW (   676.) IS GREATER THAN MAXIMUM OUTFLOW (   503.) IN STORAGE-OUTFLOW TABLE

WARNING --- ROUTED OUTFLOW (   547.) IS GREATER THAN MAXIMUM OUTFLOW (   503.) IN STORAGE-OUTFLOW TABLE

WARNING --- ROUTED OUTFLOW (   529.) IS GREATER THAN MAXIMUM OUTFLOW (   503.) IN STORAGE-OUTFLOW TABLE

WARNING --- ROUTED OUTFLOW (   636.) IS GREATER THAN MAXIMUM OUTFLOW (   503.) IN STORAGE-OUTFLOW TABLE

WARNING --- ROUTED OUTFLOW (   677.) IS GREATER THAN MAXIMUM OUTFLOW (   503.) IN STORAGE-OUTFLOW TABLE

WARNING --- ROUTED OUTFLOW (   634.) IS GREATER THAN MAXIMUM OUTFLOW (   503.) IN STORAGE-OUTFLOW TABLE

WARNING --- ROUTED OUTFLOW (   530.) IS GREATER THAN MAXIMUM OUTFLOW (   503.) IN STORAGE-OUTFLOW TABLE

WARNING --- ROUTED OUTFLOW (   524.) IS GREATER THAN MAXIMUM OUTFLOW (   503.) IN STORAGE-OUTFLOW TABLE

WARNING --- ROUTED OUTFLOW (   611.) IS GREATER THAN MAXIMUM OUTFLOW (   503.) IN STORAGE-OUTFLOW TABLE

WARNING --- ROUTED OUTFLOW (   640.) IS GREATER THAN MAXIMUM OUTFLOW (   503.) IN STORAGE-OUTFLOW TABLE

WARNING --- ROUTED OUTFLOW (   602.) IS GREATER THAN MAXIMUM OUTFLOW (   503.) IN STORAGE-OUTFLOW TABLE

WARNING --- ROUTED OUTFLOW (   513.) IS GREATER THAN MAXIMUM OUTFLOW (   503.) IN STORAGE-OUTFLOW TABLE

WARNING --- ROUTED OUTFLOW (   517.) IS GREATER THAN MAXIMUM OUTFLOW (   503.) IN STORAGE-OUTFLOW TABLE

WARNING --- ROUTED OUTFLOW (   589.) IS GREATER THAN MAXIMUM OUTFLOW (   503.) IN STORAGE-OUTFLOW TABLE

WARNING --- ROUTED OUTFLOW (   610.) IS GREATER THAN MAXIMUM OUTFLOW (   503.) IN STORAGE-OUTFLOW TABLE

WARNING --- ROUTED OUTFLOW (   576.) IS GREATER THAN MAXIMUM OUTFLOW (   503.) IN STORAGE-OUTFLOW TABLE
1
                                  RUNOFF SUMMARY
                             FLOW IN CUBIC FEET PER SECOND
                          TIME IN HOURS,  AREA IN SQUARE MILES

                                PEAK  TIME OF   AVERAGE FLOW FOR MAXIMUM PERIOD    BASIN   MAXIMUM   TIME OF
      OPERATION        STATION   FLOW   PEAK                                AREA   STAGE   MAX STAGE
+                                        6-HOUR   24-HOUR   72-HOUR

      HYDROGRAPH AT
+                   18    923.  12.17      73.      21.      20.     .81

      ROUTED TO
+                  R18    750.  12.33      73.      21.      20.     .81

      HYDROGRAPH AT
+                   19    622.  12.42      71.      20.      19.     .79

      2 COMBINED AT
+                 CP19   1353.  12.33     144.      40.      39.    1.60

      ROUTED TO
+                  R19   1248.  12.42     144.      40.      39.    1.60

      HYDROGRAPH AT
+                   21    688.  12.42      74.      20.      19.     .79

      2 COMBINED AT
+                11CP21   1933.  12.42     217.      60.      58.    2.39

      HYDROGRAPH AT
+                   20    861.  12.33      97.      27.      26.    1.07

      ROUTED TO
+                 SR20      0.    .08       0.       0.       0.    1.07

      ROUTED TO
+                  R20      0.    .08       0.       0.       0.    1.07
```

	2 COMBINED AT						
+	CP21	1933.	12.42	217.	60.	58.	3.46
	ROUTED TO						
+	SR21	191.	13.25	40.	12.	11.	3.46
	ROUTED TO						
+	R21	174.	13.42	40.	12.	11.	3.46
	HYDROGRAPH AT						
+	23	289.	12.08	18.	5.	5.	.16
	2 COMBINED AT						
+	CP23	288.	12.08	55.	17.	16.	3.62
	ROUTED TO						
+	SR23	0.	.08	0.	0.	0.	3.62
	ROUTED TO						
+	R23	0.	.08	0.	0.	0.	3.62
	HYDROGRAPH AT						
+	22	525.	12.25	50.	14.	13.	.57
	ROUTED TO						
+	R22	493.	12.42	50.	14.	13.	.57
	HYDROGRAPH AT						
+	22A	764.	12.25	69.	18.	17.	.50
	2 COMBINED AT						
+	I1C22A	1111.	12.33	120.	31.	30.	1.07
	2 COMBINED AT						
+	CP22A	1108.	12.33	119.	31.	30.	4.69
	ROUTED TO						
+	R22A	1021.	12.50	119.	31.	30.	4.69
	HYDROGRAPH AT						
+	25	500.	12.33	50.	12.	12.	.46
	2 COMBINED AT						
+	I1CP25	1414.	12.42	169.	44.	42.	5.15
	HYDROGRAPH AT						
+	24	207.	12.25	18.	5.	4.	.14
	ROUTED TO						
+	SR24	0.	.08	0.	0.	0.	.14
	ROUTED TO						
+	R24	0.	.08	0.	0.	0.	.14
	2 COMBINED AT						
+	CP25	1414.	12.42	169.	44.	42.	5.29
	ROUTED TO						
+	SR25	1374.	12.50	146.	37.	36.	5.29
	HYDROGRAPH AT						
+	26	943.	12.50	115.	30.	29.	1.16
	ROUTED TO						
+	R26	886.	12.67	115.	30.	29.	1.16
	HYDROGRAPH AT						
+	27	999.	12.42	110.	28.	27.	1.00

```
     2 COMBINED AT
+              11CP27   1648.  12.50     225.    57.    55.    2.16

     ROUTED TO
+                SR27   1642.  12.50     205.    52.    50.    2.16

     2 COMBINED AT
+                CP27   3011.  12.50     350.    88.    85.    7.45

     ROUTED TO
+                 R27   2725.  12.75     350.    88.    85.    7.45

     HYDROGRAPH AT
+                  34    361.  12.25      33.     9.     9.     .36

     HYDROGRAPH AT
+                  33    643.  12.25      59.    17.    16.     .65

     2 COMBINED AT
+                CP33   1003.  12.25      91.    26.    25.    1.01

     ROUTED TO
+                 R33    955.  12.33      91.    26.    25.    1.01

     HYDROGRAPH AT
+                  35    400.  12.25      35.    10.    10.     .39

     2 COMBINED AT
+              11CP35   1297.  12.25     127.    36.    35.    1.40

     HYDROGRAPH AT
+                  32    956.  12.42     117.    33.    32.    1.29

     2 COMBINED AT
+                CP35   2155.  12.33     243.    69.    67.    2.69

     ROUTED TO
+                 R35   2089.  12.42     243.    69.    67.    2.69

     HYDROGRAPH AT
+                  36    193.  12.25      16.     4.     4.     .24

     2 COMBINED AT
+              11CP36   2217.  12.42     258.    73.    70.    2.93

     HYDROGRAPH AT
+                  37    672.  12.42      85.    24.    23.     .95

     2 COMBINED AT
+                CP36   2886.  12.42     343.    97.    93.    3.88

     ROUTED TO
+                 R36   2810.  12.50     343.    96.    93.    3.88

     HYDROGRAPH AT
+                  38    715.  12.25      64.    17.    17.     .76

     2 COMBINED AT
+                CP38   3253.  12.42     407.   113.   109.    4.64

     ROUTED TO
+                SR38   3220.  12.50     357.    93.    90.    4.64

     ROUTED TO
+                 R38   3133.  12.58     355.    93.    90.    4.64

     HYDROGRAPH AT
+                  39    588.  12.50      74.    18.    18.     .77
```

	2 COMBINED AT						
+	I1CP39	3708.	12.58	427.	112.	108.	5.41
	2 COMBINED AT						
+	CP39	6110.	12.67	765.	197.	190.	12.86
	ROUTED TO						
+	R39	6018.	12.67	765.	197.	190.	12.86
	HYDROGRAPH AT						
+	40	525.	12.25	48.	13.	13.	.52
	ROUTED TO						
+	R40	427.	12.50	48.	13.	13.	.52
	HYDROGRAPH AT						
+	42	1029.	12.50	131.	33.	32.	1.18
	2 COMBINED AT						
+	I1CP42	1454.	12.50	179.	46.	44.	1.70
	2 COMBINED AT						
+	CP42	7140.	12.67	934.	241.	232.	14.56
	ROUTED TO						
+	SR42	6601.	12.75	797.	205.	198.	14.56
	ROUTED TO						
+	R42	6750.	12.83	797.	205.	198.	14.56
	HYDROGRAPH AT						
+	41A1	48.	12.00	3.	1.	1.	.02
	ROUTED TO						
+	SR41A1	23.	12.17	3.	1.	1.	.02
	DIVERSION TO						
+	1D303	23.	12.17	3.	1.	1.	.02
	HYDROGRAPH AT						
+	CP41A1	0.	.08	0.	0.	0.	.02
	ROUTED TO						
+	R41A1	0.	.08	0.	0.	0.	.02
	HYDROGRAPH AT						
+	41A2	60.	12.00	3.	1.	1.	.03
	2 COMBINED AT						
+	CP41A2	60.	12.00	3.	1.	1.	.05
	ROUTED TO						
+	SR41A2	60.	12.00	3.	1.	1.	.05
	DIVERSION TO						
+	2D303	24.	12.00	2.	0.	0.	.05
	HYDROGRAPH AT						
+	CP41A2	36.	12.00	1.	0.	0.	.05
	ROUTED TO						
+	R41A2	25.	12.08	1.	0.	0.	.05
	HYDROGRAPH AT						
+	41A3	69.	12.00	4.	1.	1.	.03
	2 COMBINED AT						
+	CP41A3	86.	12.08	5.	1.	1.	.08

	ROUTED TO						
+	SR41A3	24.	12.25	5.	1.	1.	.08
	DIVERSION TO						
+	3D303	24.	12.25	5.	1.	1.	.08
	HYDROGRAPH AT						
+	CP41A3	0.	.08	0.	0.	0.	.08
	ROUTED TO						
+	R41A3	0.	.08	0.	0.	0.	.08
	HYDROGRAPH AT						
+	41A	91.	12.08	5.	1.	1.	.05
	2 COMBINED AT						
+	CP41A	91.	12.08	5.	1.	1.	.13
	ROUTED TO						
+	SR41A	23.	12.25	5.	1.	1.	.13
	DIVERSION TO						
+	4D303	23.	12.25	5.	1.	1.	.13
	HYDROGRAPH AT						
+	CP41A	0.	.08	0.	0.	0.	.13
	ROUTED TO						
+	R41A	0.	.08	0.	0.	0.	.13
	HYDROGRAPH AT						
+	41-1	208.	12.17	14.	3.	3.	.15
	2 COMBINED AT						
+	CP41-1	208.	12.17	14.	3.	3.	.28
	ROUTED TO						
+	SR41-1	148.	12.33	14.	3.	3.	.28
	DIVERSION TO						
+	5D303	45.	12.33	11.	3.	3.	.28
	HYDROGRAPH AT						
+	CP41-1	103.	12.33	2.	1.	1.	.28
	ROUTED TO						
+	R41-1	38.	12.42	2.	1.	1.	.28
	HYDROGRAPH AT						
+	41-2	143.	12.17	9.	2.	2.	.10
	2 COMBINED AT						
+	CP41-2	143.	12.17	12.	3.	3.	.38
	ROUTED TO						
+	SR41-2	33.	12.50	12.	3.	3.	.38
	DIVERSION TO						
+	6D303	33.	12.50	12.	3.	3.	.38
	HYDROGRAPH AT						
+	CP41-2	0.	.08	0.	0.	0.	.38
	ROUTED TO						
+	R41-2	0.	.08	0.	0.	0.	.38
	HYDROGRAPH AT						
+	41	567.	12.42	64.	16.	16.	.58

	2 COMBINED AT						
+	CP41	567.	12.42	64.	16.	16.	.68
	ROUTED TO						
+	SR41	531.	12.50	64.	16.	16.	.68
	DIVERSION TO						
+	7D303	47.	12.50	26.	7.	6.	.68
	HYDROGRAPH AT						
+	CP41	484.	12.50	38.	9.	9.	.68
	ROUTED TO						
+	R41	465.	12.58	38.	9.	9.	.68
	HYDROGRAPH AT						
+	43-1	76.	12.08	5.	1.	1.	.04
	2 COMBINED AT						
+	CP43-1	465.	12.58	42.	11.	10.	1.00
	ROUTED TO						
+	SR43-1	282.	12.83	42.	11.	10.	1.00
	DIVERSION TO						
+	1D303A	282.	12.83	42.	11.	10.	1.00
	HYDROGRAPH AT						
+	CP43-1	0.	.08	0.	0.	0.	1.00
	ROUTED TO						
+	R43-1	0.	.08	0.	0.	0.	1.00
	HYDROGRAPH AT						
+	43-2	19.	12.00	1.	0.	0.	.01
	2 COMBINED AT						
+	CP43-2	19.	12.00	1.	0.	0.	1.01
	ROUTED TO						
+	SR43-2	10.	12.17	1.	0.	0.	1.01
	DIVERSION TO						
+	2D303A	10.	12.17	1.	0.	0.	1.01
	HYDROGRAPH AT						
+	CP43-2	0.	.08	0.	0.	0.	1.01
	ROUTED TO						
+	R43-2	0.	.08	0.	0.	0.	1.01
	HYDROGRAPH AT						
+	43-3	107.	12.00	6.	1.	1.	.05
	2 COMBINED AT						
+	CP43-3	107.	12.00	6.	1.	1.	1.06
	ROUTED TO						
+	SR43-3	23.	12.17	5.	1.	1.	1.06
	DIVERSION TO						
+	3D303A	23.	12.17	5.	1.	1.	1.06
	HYDROGRAPH AT						
+	CP43-3	0.	.08	0.	0.	0.	1.06
	ROUTED TO						
+	R43-3	0.	.08	0.	0.	0.	1.06

```
     HYDROGRAPH AT
+          43-4     64.  12.00      3.      1.      1.     .03

     2 COMBINED AT
+          CP43-4   64.  12.00      3.      1.      1.    1.09

     ROUTED TO
+          SR43-4   21.  12.17      3.      1.      1.    1.09

     DIVERSION TO
+          DI43-4   21.  12.17      3.      1.      1.    1.09

     HYDROGRAPH AT
+          CP43-4    0.    .08      0.      0.      0.    1.09

     ROUTED TO
+          R43-4     0.    .08      0.      0.      0.    1.09

     HYDROGRAPH AT
+          43-5     43.  12.00      2.      1.      1.     .02

     2 COMBINED AT
+          CP43-5   43.  12.00      2.      1.      1.    1.11

     ROUTED TO
+          SR43-5   19.  12.17      2.      1.      1.    1.11

     DIVERSION TO
+          DI43-5   19.  12.17      2.      1.      1.    1.11

     HYDROGRAPH AT
+          CP43-5    0.    .08      0.      0.      0.    1.11

     ROUTED TO
+          R43-5     0.    .08      0.      0.      0.    1.11

     HYDROGRAPH AT
+          43-6     45.  12.00      2.      1.      1.     .02

     2 COMBINED AT
+          CP43-6   45.  12.00      2.      1.      1.    1.13

     ROUTED TO
+          SR43-6    6.  12.17      2.      1.      1.    1.13

     DIVERSION TO
+          DI43-6    6.  12.17      2.      1.      1.    1.13

     HYDROGRAPH AT
+          CP43-6    0.    .08      0.      0.      0.    1.13

     ROUTED TO
+          R43-6     0.    .08      0.      0.      0.    1.13

     HYDROGRAPH AT
+          43-7     45.  12.00      2.      1.      1.     .02

     2 COMBINED AT
+          CP43-7   45.  12.00      2.      1.      1.    1.15

     ROUTED TO
+          SR43-7   20.  12.08      2.      1.      1.    1.15

     DIVERSION TO
+          DI43-7   20.  12.08      2.      1.      1.    1.15

     HYDROGRAPH AT
+          CP43-7    0.    .08      0.      0.      0.    1.15
```

```
      ROUTED TO
+                R43-7     0.   .08       0.       0.       0.    1.15

      HYDROGRAPH AT
+                 43-8    23.  12.00       1.       0.       0.     .01

      2 COMBINED AT
+               CP43-8    23.  12.00       1.       0.       0.    1.16

      ROUTED TO
+               SR43-8    12.  12.08       1.       0.       0.    1.16

      DIVERSION TO
+               DI43-8    12.  12.08       1.       0.       0.    1.16

      HYDROGRAPH AT
+               CP43-8     0.   .08       0.       0.       0.    1.16

      ROUTED TO
+                R43-8     0.   .08       0.       0.       0.    1.16

      HYDROGRAPH AT
+                  43    23.  12.00       1.       0.       0.     .01

      2 COMBINED AT
+               I1CP43    22.  12.00       1.       0.       0.    1.17

      2 COMBINED AT
+                 CP43  6769.  12.83     799.     206.     199.   13.90

      ROUTED TO
+                 SR43  4637.  13.00     799.     206.     199.   13.90

      DIVERSION TO
+                 DI43     0.   .08       0.       0.       0.   13.90

      HYDROGRAPH AT
+                 CP43  4637.  13.00     799.     206.     199.   13.90

      ROUTED TO
+                 RD43  4624.  13.08     797.     206.     198.   13.90

      HYDROGRAPH AT
+               CP43-4    21.  12.17       3.       1.       1.    1.09

      ROUTED TO
+               RD43-4    14.  12.67       3.       1.       1.    1.09

      HYDROGRAPH AT
+               CP43-5    19.  12.17       2.       1.       1.    1.11

      ROUTED TO
+               RD43-5    13.  12.58       2.       1.       1.    1.11

      2 COMBINED AT
+               I1CWT4    27.  12.67       5.       1.       1.     .05

      HYDROGRAPH AT
+               CP43-6     6.  12.17       2.       1.       1.    1.13

      ROUTED TO
+               RD43-6     4.  13.17       2.       1.       1.    1.13

      2 COMBINED AT
+               I2CWT4    29.  12.67       8.       2.       2.     .07

      HYDROGRAPH AT
+               CP43-7    20.  12.08       2.       1.       1.    1.15
```

	ROUTED TO						
+	RD43-7	12.	12.58	2.	1.	1.	1.15
	2 COMBINED AT						
+	I3CWT4	41.	12.58	10.	3.	2.	.09
	HYDROGRAPH AT						
+	CP43-8	12.	12.08	1.	0.	0.	1.16
	ROUTED TO						
+	RD43-8	5.	12.58	1.	0.	0.	1.16
	2 COMBINED AT						
+	I4CWT4	46.	12.58	11.	3.	3.	.10
	HYDROGRAPH AT						
+	44	300.	12.25	25.	6.	6.	.22
	2 COMBINED AT						
+	I5CWT4	323.	12.25	36.	9.	9.	.32
	2 COMBINED AT						
+	I6CWT4	4652.	13.08	827.	215.	207.	14.12
	HYDROGRAPH AT						
+	45-1	143.	12.08	9.	2.	2.	.08
	HYDROGRAPH AT						
+	CP43	0.	.08	0.	0.	0.	13.90
	2 COMBINED AT						
+	CP45-1	143.	12.08	9.	2.	2.	.08
	ROUTED TO						
+	SR45-1	107.	12.25	9.	2.	2.	.08
	DIVERSION TO						
+	DI45-1	107.	12.25	9.	2.	2.	.08
	HYDROGRAPH AT						
+	CP45-1	0.	.08	0.	0.	0.	.08
	ROUTED TO						
+	R45-1	0.	.08	0.	0.	0.	.08
	HYDROGRAPH AT						
+	45	401.	12.42	48.	12.	12.	.38
	2 COMBINED AT						
+	CP45	401.	12.42	48.	12.	12.	.46
	ROUTED TO						
+	SR45	209.	12.75	48.	12.	12.	.46
	DIVERSION TO						
+	DI45	209.	12.75	48.	12.	12.	.46
	HYDROGRAPH AT						
+	CP45	0.	.08	0.	0.	0.	.46
	ROUTED TO						
+	R45	0.	.08	0.	0.	0.	.46
	HYDROGRAPH AT						
+	46-1	184.	12.25	18.	4.	4.	.15
	2 COMBINED AT						
+	CP46-1	183.	12.25	17.	4.	4.	.61

```
      ROUTED TO
+             SR46-1    107.  12.50     17.     4.     4.    .61

      DIVERSION TO
+             DI46-1    107.  12.50     17.     4.     4.    .61

      HYDROGRAPH AT
+             CP46-1     0.    .08      0.     0.     0.    .61

      ROUTED TO
+              R46-1     0.    .08      0.     0.     0.    .61

      HYDROGRAPH AT
+                46     651.  12.58     94.    24.    23.    .85

      2 COMBINED AT
+             I1CP46     651.  12.58     94.    24.    23.   1.46

      HYDROGRAPH AT
+               215B     201.  12.08     12.     3.     3.    .10

      ROUTED TO
+              R215B      89.  12.42     12.     3.     3.    .10

      HYDROGRAPH AT
+               232A     810.  12.25     72.    18.    17.    .61

      2 COMBINED AT
+             CP232A     869.  12.25     84.    21.    20.    .71

      ROUTED TO
+              R232A     691.  12.58     84.    21.    20.    .71

      HYDROGRAPH AT
+                28     747.  12.50     89.    22.    22.    .86

      2 COMBINED AT
+               CP28    1413.  12.50    173.    43.    42.   1.57

      ROUTED TO
+                R28    1399.  12.58    173.    43.    42.   1.57

      HYDROGRAPH AT
+                30     244.  12.33     21.     5.     5.    .28

      2 COMBINED AT
+             I1CP30    1507.  12.50    194.    48.    47.   1.85

      HYDROGRAPH AT
+                29     228.  12.25     18.     5.     4.    .22

      ROUTED TO
+               SR29      0.    .08      0.     0.     0.    .22

      ROUTED TO
+                R29      0.    .08      0.     0.     0.    .22

      2 COMBINED AT
+               CP30    1507.  12.50    194.    48.    47.   2.07

      ROUTED TO
+                R30    1393.  12.75    193.    48.    47.   2.07

      HYDROGRAPH AT
+                31     525.  12.50     63.    16.    15.    .71

      2 COMBINED AT
+               CP31    1735.  12.67    256.    64.    62.   2.78
```

	ROUTED TO						
+	R31	1714.	12.83	256.	64.	62.	2.78
	2 COMBINED AT						
+	CP46	2206.	12.75	349.	88.	85.	4.24
	ROUTED TO						
+	SR46	2115.	12.92	349.	88.	85.	4.24
	ROUTED TO						
+	R46	2051.	13.08	349.	88.	85.	4.24
	HYDROGRAPH AT						
+	CP45-1	107.	12.25	9.	2.	2.	.08
	ROUTED TO						
+	RD45-1	76.	12.42	9.	2.	2.	.08
	HYDROGRAPH AT						
+	CP45	209.	12.75	48.	12.	12.	.46
	ROUTED TO						
+	RD45	199.	13.00	48.	12.	12.	.46
	2 COMBINED AT						
+	I7CWT4	230.	12.83.	57.	14.	14.	.46
	HYDROGRAPH AT						
+	CP46-1	107.	12.50	17.	4.	4.	.61
	ROUTED TO						
+	RD46-1	94.	12.83	17.	4.	4.	.61
	2 COMBINED AT						
+	I8CWT4	324.	12.83	75.	19.	18.	.61
	HYDROGRAPH AT						
+	WT4	997.	12.25	88.	22.	21.	.77
	2 COMBINED AT						
+	I9CWT4	1070.	12.25	162.	41.	39.	1.38
	2 COMBINED AT						
+	I10WT4	2373.	13.00	510.	128.	124.	5.62
	2 COMBINED AT						
+	CPWT4	6885.	13.08	1306.	335.	323.	19.28
	ROUTED TO						
+	RS47	0.	.08	0.	0.	0.	19.28

Time of peak.

WSEIEW

*** NORMAL END OF HEC-1 ***