Final Drainage Report

SANTAN CHANNEL PROJECT

Southeast Valley Regional
Drainage System

Phase 1 Basin Grading
Phase 2 Outfall Channel and Basin Piping

ADOT Contract 97-16
600-7-502 202L MA 050
Tracs No. H4314 01D
FCDMC Project No. 490012

Prepared for:

ARIZONA DEPARTMENT OF TRANSPORTATION
and
FLOOD CONTROL DISTRICT OF MARICOPA COUNTY

Prepared by:

HDR Engineering, Inc.
2141 East Highland Ave., Suite 250
Phoenix, AZ 85016

May 30, 1998

Final Drainage Report

SANTAN CHANNEL PROJECT

Southeast Valley Regional
Drainage System

Property of
Phoenix, AZ 85009

Phase 1 - Basin Grading
Phase 2 - Outfall Channel and Basin Piping

ADOT Contract 97-16
600-7-502 202L MA 050
Tracs No. H4314 01D
FCDMC Project No. 490012

Prepared for:

ARIZONA DEPARTMENT OF TRANSPORTATION
and
FLOOD CONTROL DISTRICT OF MARICOPA COUNTY

Prepared by:

HDR Engineering, Inc.
2141 East Highland Ave., Suite 250
Phoenix, AZ 85016

May 30, 1998

SANTAN CHANNEL PROJECT
PHASES 1 AND 2
FINAL DRAINAGE REPORT

TABLE OF CONTENTS

Page No.

1.0 INTRODUCTION 1

2.0 PROJECT DESCRIPTION 4
- 2.1 Principal Features 4
- 2.2 Coordination Activities 4

3.0 HYDROLOGY 7
- 3.1 Previous Studies 7
- 3.2 Watershed Description 8
- 3.3 Wood/Patel Modifications to the HDR Hydrologic Model 9
- 3.4 Wood/Patel First Flush Basin Hydrologic Analyses 9
- 3.5 Results of the Hydrologic Analysis 10

4.0 HYDRAULIC ANALYSIS 11
- 4.1 Santan Channel Description 11
- 4.2 Channel Design Assumptions 12
- 4.3 Channel Geometry 12
- 4.4 Channel Slope 12
- 4.5 Freeboard 12
- 4.6 Bank Lining 12
- 4.7 Maintenance Access 12
- 4.8 Riprap Protection at Channel Outfall 13
- 4.9 Hydraulic Computer Model 13
- 4.10 Super Elevation of Water Surface 13

5.0 BASIN COMPLEX CONCEPTUAL DESIGN 14
- 5.1 General Plan 14
- 5.2 Gila Drain Diversion 14
- 5.3 Basin Piping and Flow Routing 15
- 5.4 Kyrene South Pump Station 18
- 5.5 Vegetated Treatment Cells 19

6.0 EXHIBITS **24**
Exhibit 1 - Phase 1 Basin Grading Project Plans
Exhibit 2 - Phase 2 Santan Channel Plans and Basin Piping Plans

LIST OF FIGURES

Figure 1 - Project Location Map 2
Figure 2 – Santan Channel Project Phasing 3
Figure 3 – Santan Channel Project/Southeast Valley Regional Drainage System .. 5
Figure 4 - Basin Complex Conceptual Plan 21
Figure 5 - Kyrene South Pump Station Plan. 22
Figure 6 – Typical "Hybrid" Wetlands Treatment Cell 23

LIST OF TABLES

Table 1 - 100-Year Peak Discharges for Santan Fwy/Santan Channel Project 10
Table 2 - Gila Drain Diversion Analysis 16

LIST OF APPENDICES

APPENDIX A - Hydrologic Analysis / HEC-1 Computer Model / Culvert and Basin Piping Analyses
APPENDIX B - Channel Hydraulic Analysis / HEC-RAS
APPENDIX C - Hydrologic Analyses of First Flush Flow Using HEC-1
APPENDIX D - Santan Treatment Wetlands Report
APPENDIX E - Technical Memorandum Review of 30% Plans, April 30, 1997
APPENDIX F - Water Quality Protection Permit- Gila Floodway

HEC-1 and HEC-RAS Input and Output Diskettes (In selected copies only)

1.0 INTRODUCTION

This report documents the conceptual planning and design of the Santan Channel Project. The project is jointly sponsored by the Arizona Department of Transportation (ADOT) and the Flood Control District of Maricopa County (FCDMC). When completed, it will provide a drainage outlet for the Price and Santan Freeways and flood control benefits for East Valley communities and unincorporated areas. It is identified by FCDMC as the Southeast Valley Regional Drainage System (SEVRDS). The Santan Channel parallels the Santan Freeway and drains a portion of the Price Freeway (formerly Price Expressway) shown in Figure 1.

The project is being developed in three phases. Major features of the project are shown in Figure 2. Phase 1 included the design and grading construction of Basin B and associated basins. Phase 1 construction was completed in November 1997. The plans for Phase 1 are included in Section 6. Phase 2 consists of the construction of the Outfall Channel from Basin B to the Gila Drain Floodway on the west side of I-10, and some of the piping facilities in the Basin B complex. The 100% Plans for the Outfall Channel and Basin B piping are also included in Section 6. Construction of Phase 2 is currently scheduled to begin in September 1998 and the construction duration is estimated to be 15 months. The FCDMC is providing construction contract administration for both Phases 1 and 2.

Phase 3 was tentatively divided into two parts, Phase 3A and Phase 3B, in November 1997 as shown in Figure 2. At that time ADOT was considering accelerating Phase 3A design and construction as a back-up plan if unresolved water quality and right-of way issues would prevent Phase 2 construction from beginning in summer of 1998. This would have allowed FCDMC to continue to meet its funding schedule for the project. However, in early 1998 the Phase 2 issues were on schedule for resolution and the acceleration of Phase 3A was placed on hold. ADOT and FCDMC are currently developing a revised schedule for Phase 3.

The scope of this report includes the final design of Phases 1 and 2 and the conceptual design of the elements of Phase 3 that are related to and are an integral part of the design of the Basin B facilities. The general plan of the basin complex, consisting of the Basin B primary retention basin, the Equalization Basin and the two cells of the wetland treatment system, is discussed in Section 5. The Kyrene South Pump Station is a key facility in Phase 3 and has the multiple purposes of 1) draining the freeway undercrossing at Kyrene Road, 2) recirculating or discharging the treated storm water from the wetlands cells and, 3) evacuating the Basin B retained storm water. This facility must be constructed to place the wetlands treatment system in operation. The pump station is required to recirculate externally supplied water within the complex to fully establish and maintain the vegetation in the cells. Concept design for the pump station and recommendations for the vegetated treatment system are included in Section 5.

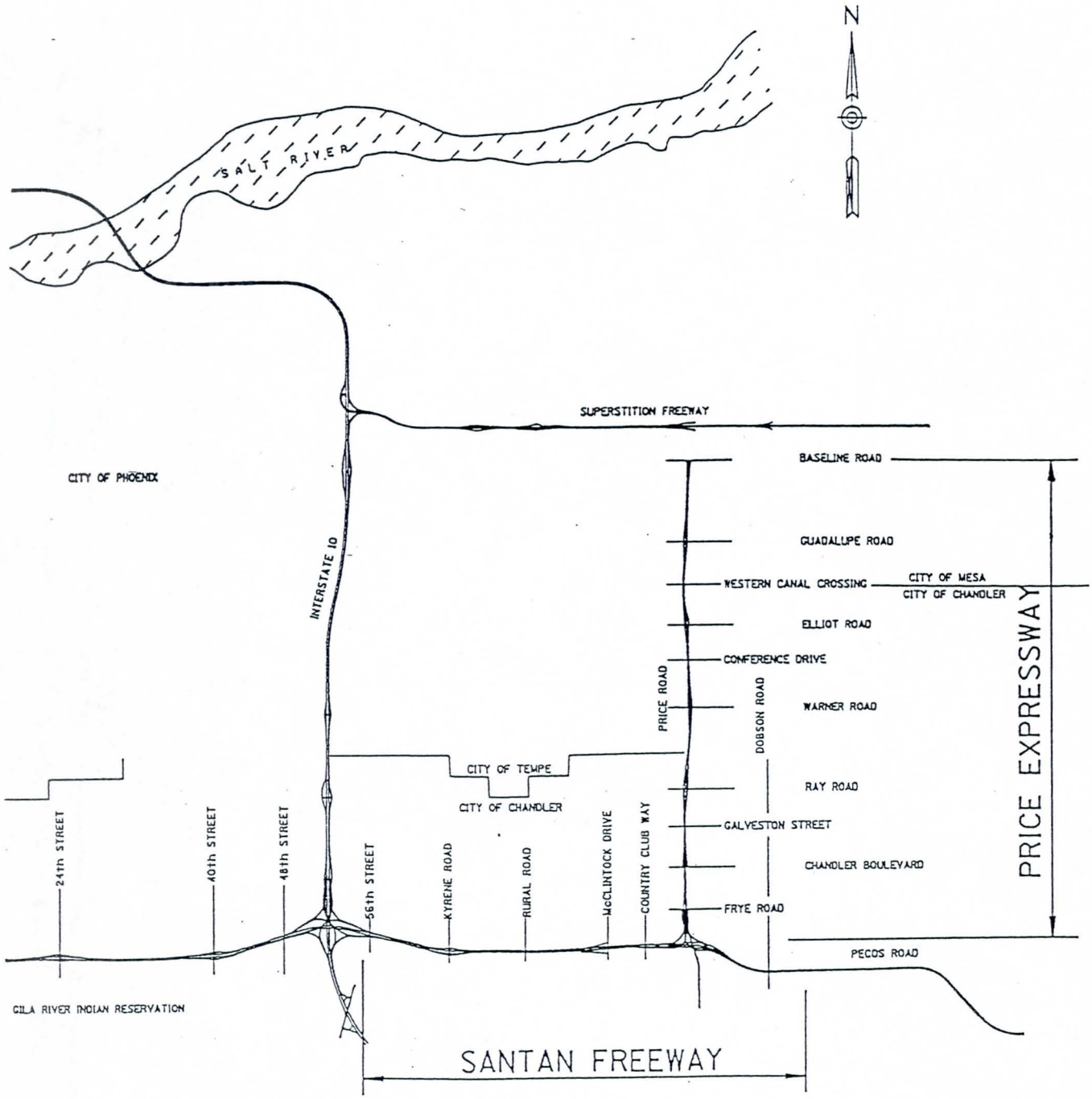

ADOT CONTRACT NO.97-16
PROJECT NO. 600-7-502
TRACS NO. H4314 01 D
SANTAN CHANNEL PHASES 1 AND 2
SOUTHEAST VALLEY REGIONAL
DRAINAGE SYSTEM (SEVRDS)

FIGURE 1

PROJECT LOCATION MAP

HDR

F. H. V. A. REGION	STATE	PROJECT NO.	SHEET NO.	TOTAL SHEETS	AS BUILT
9	ARIZ.	600-7-502			
		202 L MA 050			

SOUTH EAST VALLEY REGIONAL DRAINAGE SYSTEM
SANTAN CHANNEL PROJECT

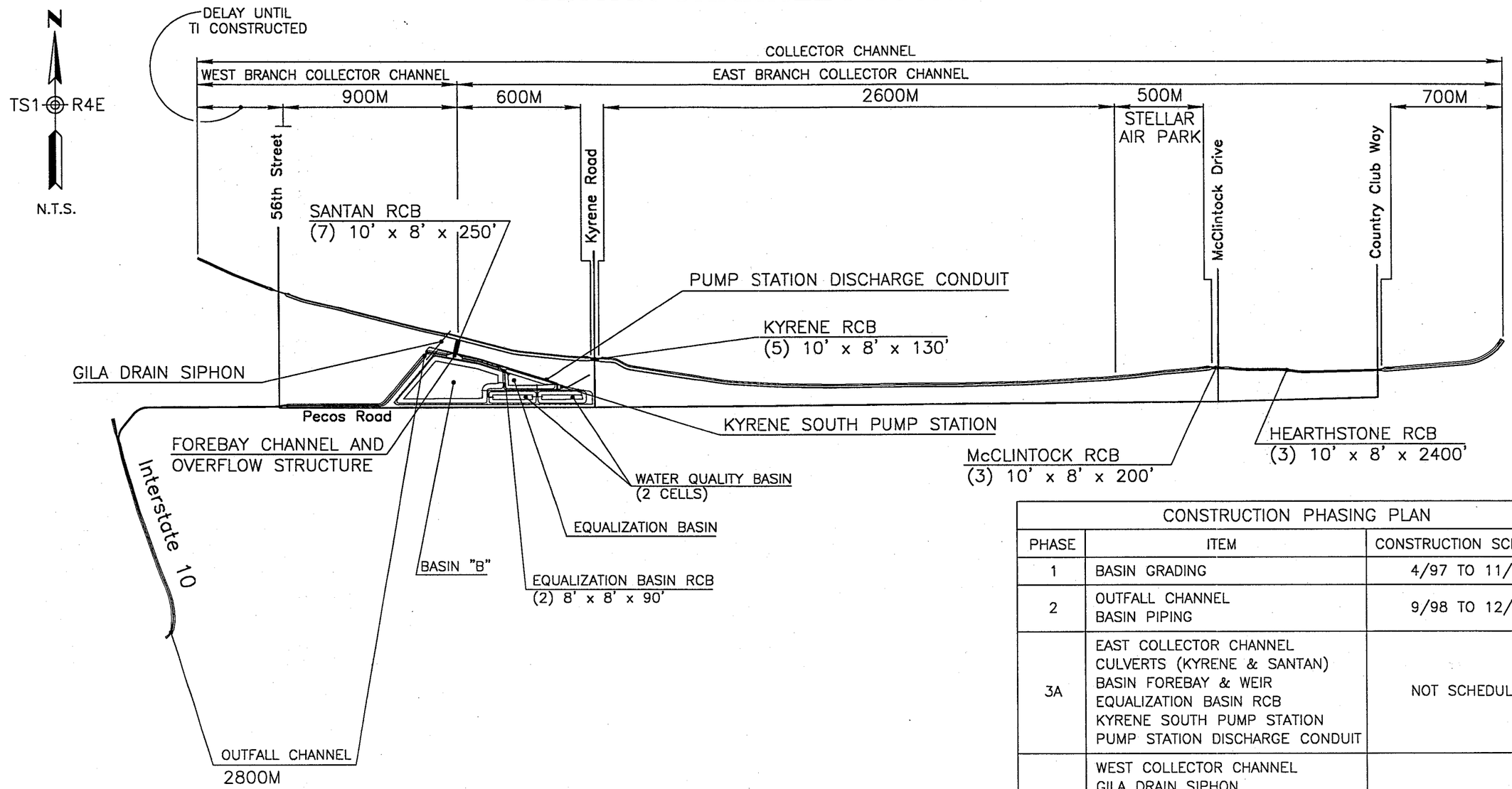

CONSTRUCTION PHASING PLAN		
PHASE	ITEM	CONSTRUCTION SCHEDULE
1	BASIN GRADING	4/97 TO 11/97
2	OUTFALL CHANNEL BASIN PIPING	9/98 TO 12/99
3A	EAST COLLECTOR CHANNEL CULVERTS (KYRENE & SANTAN) BASIN FOREBAY & WEIR EQUALIZATION BASIN RCB KYRENE SOUTH PUMP STATION PUMP STATION DISCHARGE CONDUIT	NOT SCHEDULED
3B	WEST COLLECTOR CHANNEL GILA DRAIN SIPHON EAST COLLECTOR CHANNEL HEARTHSTONE RCB McCLINTOCK RCB	NOT SCHEDULED

NOTE: PHASE 3 WAS DIVIDED INTO PHASE 3A & 3B IN NOVEMBER 1997 FOR A POSSIBLE ACCELERATION OF PHASE 3A. AT THE TIME OF WRITING (5/98) THE DESIGN AND CONSTRUCTION SCHEDULE HAS NOT BEEN FIRMLY ESTABLISHED FOR PHASE 3.

ADOT CONTRACT 97-16

	NAME	DATE
DESIGN	JZ	6/98
DRAWN	LJ	6/98
CHECKED	JZ	6/98

HDR Engineering, Inc.

ARIZONA DEPARTMENT OF TRANSPORTATION
INTERMODAL TRANSPORTATION DIVISION AND
FLOOD CONTROL DISTRICT OF MARICOPA COUNTY

SANTAN CHANNEL
PROJECT PHASING

FIGURE 2

ROUTE: 202 L
LOCATION: SANTAN FREEWAY
I-10 TO PRICE FREEWAY

___ OF ___

SANPHZ.DGN

SURVEY NO.	ISSUED PLANS	REVISIONS	LOCATION	DATE

2.0 PROJECT DESCRIPTION

2.1 Principal Features

Figure 3 shows the major features of the Santan Channel Project that are discussed in this report. The project is designed to collect both on-site runoff and off-site runoff approaching from the north and east of the Santan and Price Freeway alignments. The off-site hydrologic analysis for the Santan Channel is discussed in Section 3.

The Basin B complex, including the Equalization Basin, the two cells of the Water Quality Basin, and Basin "B" were graded in Phase 1.

The Outfall Channel to be constructed in Phase 2 begins on the west side of the Salt River Project (SRP) Gila Drain at the Basin B outlet and extends southward and westward along the Pecos alignment to I-10. Near I-10 it crosses onto Gila River Indian Community (GRIC) reservation, passes under I-10, and then continues southward along the west side of I-10 to the Gila Drain Floodway. The design of this channel is discussed in Section 4. Although not discussed in this report, GRIC's Pima-Maricopa Irrigation Project (P-MIP) dual 84-inch and 54-inch main pipelines from 56th Street to the west side of I-10 will be constructed in the Phase 2 contract. The primary benefit is that the cost of the 56th Street and I-10 crossings will be shared, thus reducing the cost to both P-MIP and GRIC. [1]

Phase 2 construction also includes some of the piping in the basin complex. The design of the piping facilities included in Phase 2, as well as the concept design for the remainder of the piping to be constructed in Phase 3, is included in Section 5.

2.2 Coordination Activities

Figure 3 also shows the various agencies that are participants in the Santan Channel SEVRDS project. In July 1997 the key agencies, including ADOT, FCDMC, GRIC Pima-Maricopa Irrigation Project (P-MIP), Chandler and to a lessor extent, Phoenix and SRP, formed a "Stakeholders" group that has been meeting bimonthly to provide overall coordination and management of the project. The Santan Channel will discharge storm water to GRIC's Gila Floodway (or Gila Drain Floodway) and this requires storm water discharge permit from GRIC. The channel also requires long-term leasing of tribal land. The water quality and right-of-way acquisition issues have been the primary focus of the Stakeholders meetings. The following coordination issues have impacted the design of the Santan Project facilities:

1. The project team agreed to allow the Gila River Indian Community (GRIC) to include a portion of the Pima-Maricopa Irrigation Project (P-MIP) in the Phase 2 construction plans in order to minimize cost and construction impacts of the 56th Street and I-10 crossings of the two projects.

[1] The P-MIP pipeline project is owned and operated by the GRIC.

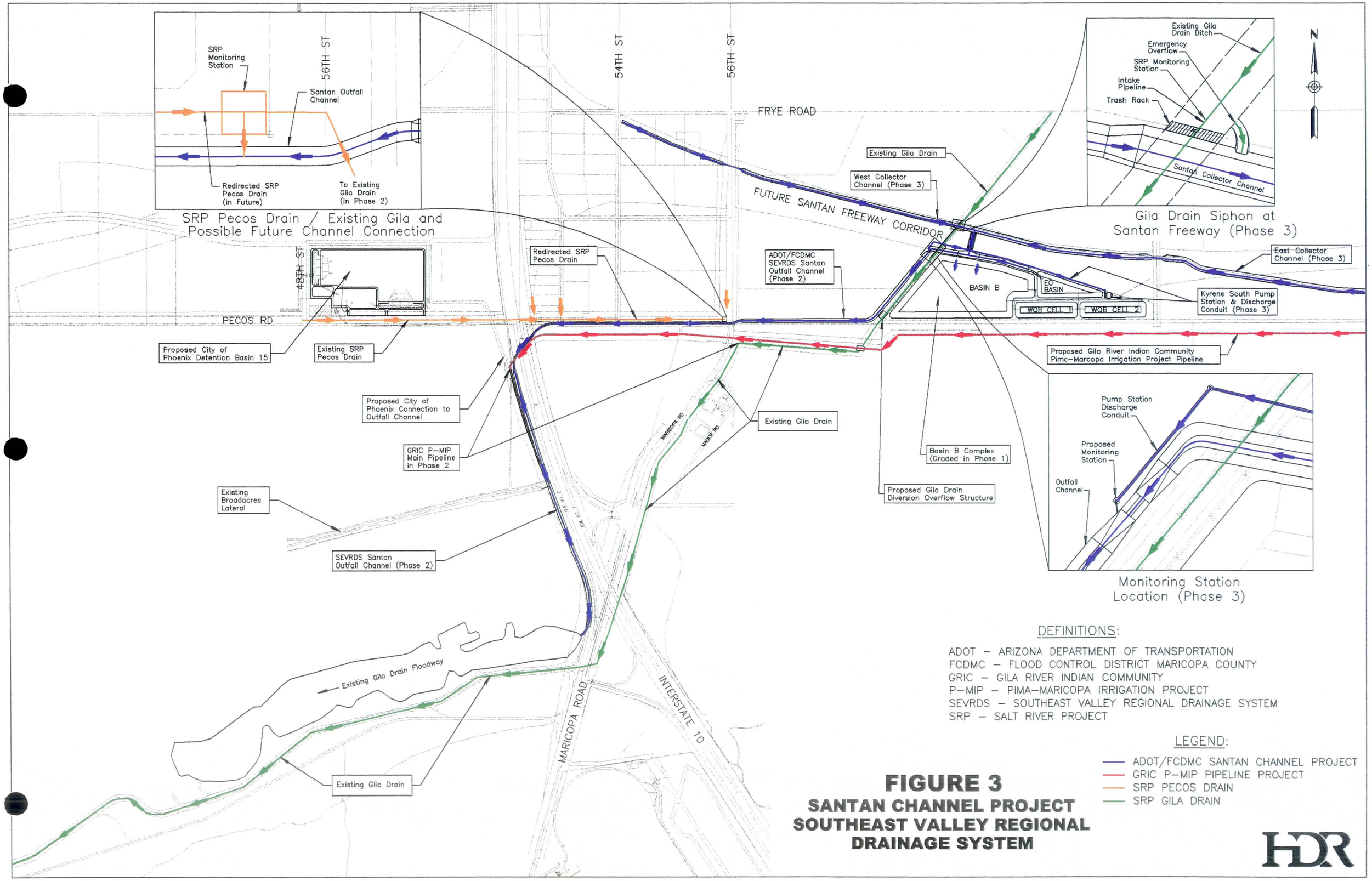

FIGURE 3
SANTAN CHANNEL PROJECT
SOUTHEAST VALLEY REGIONAL DRAINAGE SYSTEM

2. Water quality of the storm water runoff is of primary concern to the GRIC. The General Consultant (GC) design team developed a drainage design concept that addresses both water quality and quantity issues, as defined in the *Design Memorandum for the SEVRDS Water Management* (DMJM, Sept. 1996). The SEVRDS Stakeholders have further advanced this plan and the procedures and schedule for ADOT to obtain the discharge permit from the GRIC have been defined in an agreement. The text of the agreement is included in Appendix F.

3. The water quality permit requires a storm water treatment system to treat "first flush" storm water. The Equalization Basin is designed to collect and retain the "first flush" storm water. The Water Quality cells will have a vegetative treatment system to provide "polishing" of the storm water retained in the Equalization Basin. Details of the recommended design of the vegetated treatment system are presented in Section 5.

4. In August 1997, P-MIP asked the project team to evaluate the possibility of allowing the diversion of up to 150 cfs from the Gila Drain to the Santan Channel. A subsequent evaluation by HDR determined that the current design of the Santan Channel (i.e. at the 60% stage) could accept the additional flow at the diversion. The evaluation of the impact of this potential diversion in the future is presented in Section 5.0.

5. Recently the City of Phoenix advanced the design detention basin (Basin 15) on the west side of I-10 and Pecos Road to the concept design level. It is now planned to operate as a retention basin with post event evacuation to the Santan Channel. With no outflow during storm, this system (known as the 48th Street Drainage System) will not impact the design peak flow of the Santan Channel. However, the City plans to evacuate Basin 15 post event when there is adequate capacity in the channel.

6. The Gila Drain is a Salt River Project (SRP) irrigation return flow channel that ultimately discharges to the Gila River. It is the subject of an early 1900's agreement between the Gila River Indian Community (GRIC) and the SRP. The Gila Drain is located immediately west of Basin B. In the future it will be siphoned under the West Collector channel, the freeway and the Basin B outlet channel in a single 60-inch pipe. (Note: the pipe size is approximate.)

7. The Pecos Drain from I-10 to 56th Street must be reconstructed in Phase 2 to accommodate the installation of the Santan Channel box culvert in the Pecos Road alignment. After the culvert is installed, the Pecos Drain will be reconstructed on top of the culvert and will discharge at its existing outlet to the Gila Drain. (See Figure 3).

8. If P-MIP goes ahead with plans to divert the Gila Drain in the future, there is some likelihood that there will be an effort to abandon the Gila Drain below the diversion. (See Figure 3). If so, the Pecos Drain may be diverted into the Santan Channel as shown in Figure 3 provided all parties (ADOT, GRIC and SRP) could come to agreement.

3.0 HYDROLOGY

3.1 Previous Studies

Santan Freeway off-site hydrologic analysis was originally performed by HDR Engineering, Inc. as part of a General Engineering Consultant agreement with the Arizona Department of Transportation (ADOT) for the Price Expressway and the portion of the Santan Freeway from Dobson Road to I-10. The hydrologic analyses are documented in the following ADOT reports: *Hydrology Study, Price Expressway*, (HDR) December 1989, *Gila Drain Alternative Concept Drainage Report,* (HDR) February 1993, and *Gila Drain Floodway Master Plan Report,* (HDR) February 1993. The HEC-1[2] model developed for this project is based upon and is nearly identical to the model described in these reports.

The HEC-1 model that was originally developed in 1989 and modified in 1992 by HDR is the current model of record for the drainage design of Santan Project. A history of the applications of this model is as follows:

1. The original HEC-1 model was developed in 1989 for the Price Expressway from Western Canal to the Price/Santan Interchange and Santan Freeway from Dobson Road to I-10. The original drainage plan for the Price and Santan Freeways prior to HDR's involvement in 1989 was to pump all of the collected Price and Santan off-site and on-site storm water to the Carriage Lane Outfall north of Western Canal. This plan changed in 1991 (See Item 2 below). However, the basic structure of the HEC-1 model has not changed since 1989. Documentation of the development of the model can be found in the original 1989 report. A drainage area schematic of the 1989 HEC-1 model is included in the Appendix A map pocket.

2. A study by HDR in 1989 entitled *Gila Drain Alternative Study* (12/89) presented a design concept and cost analysis to use the Gila Drain as an outlet for the Price/Santan freeway drainage system. Based upon this plan, ADOT entered into an agreement with GRIC in 1991 to discharge Price and Santan storm water to the Gila Drain Floodway via the Gila Drain. The "pump-back" scheme was thus abandoned and HDR prepared the new concept as shown in the *Gila Drain Alternative Concept Drainage Report* (1993) and in the General Plan for the Price and Santan Freeways. The drainage channel system along the Santan Freeway including Basin B and the outfall channel to the Gila Drain Floodway later became known as the as the Santan Channel Project. The redirecting of flows to the floodway required some changes to the routings of the original 1989 HEC-1 model along the Santan Freeway. These changes are shown in the 1992 HEC-1 model schematic. The 1992 schematic is also included in the Appendix A map pocket.

3. In the 1994 to 1995 time frame, FCDMC identified the Santan Channel system as the SEVRDS and began to provide technical, administrative, and financial support to the project. HDR prepared an additional report for ADOT and FCDMC entitled *Alternative Study, Southeast Valley Regional Drainage System (SEVRDS), Price and Santan*

[2] An acronym for the US Army Corps of Engineers Hydrologic Engineering Center Flood Hydrograph Package.

Freeways, June 1995. This report explored the cost to reroute the Santan outfall channel from an alignment within the Gila Drain[3] right-of-way to an alignment running west along the north border of GRIC, under I-10 and then south along the west side of I-10 to the Gila Drain Floodway. This is the current alignment for the Phase 2 Outfall Channel, except that the alignment along Pecos Road is off of the reservation.

4. In 1996 this concept was advanced to the 30% design stage by DMJM Arizona, Inc. and Wood, Patel & Associates, Inc. (Wood/Patel), as reported in the following: *Design Memorandum for SEVRDS Water Management* (DMJM, September, 1996), *Initial Drainage Report, Santan Freeway 56th Street to Price Road and Gila Drain Floodway to Basin B* (Wood/Patel, September 12, 1996) and *Santan Drainage Channel Plans (30%)* (DMJM, September 16, 1996). Significant changes to the HDR plan included the alignment along Pecos Road that was off the reservation and the addition of a "first-flush" storm water control and treatment system at Basin B. Wood/Patel modified the original 1992 HEC-1 model Basin B routings to include an "Equalization Basin" to collect first flush storm water. The modifications are described in Section 3.3.

5. In 1995 the 1992 HEC-1 model was also used to design some of the Price Freeway components of the SEVRDS/Santan Channel system including Basin G at Galveston Road. The outlet pipe from this basin will discharge to the Santan Channel when the Price/Santan interchange is constructed. The model also is being used for the off-site drainage design for the Price Freeway north of Basin G to the Carriage Lane Outfall at Western Canal.

In addition to the 1989 and 1992 HEC-1 schematics, Appendix A includes a summary printout of the current model and the hydraulic analyses that were required to develop the routings in the Basin B complex.

3.2 Watershed Description

The contributing watershed is located in eastern Maricopa County between the Salt and Gila Rivers. The watershed's historic drainage pattern is westerly toward the Gila Drain. Surface runoff concentrates near the I-10/Maricopa Road interchange. West of I-10 the Gila Drain Floodway conveys floodwater westerly to the Gila River. The Gila Drain Floodway is a natural wash that is nearly 12 miles long. The hydrology and hydraulics of this channel are documented in the *Gila Drain Floodway Master Plan* prepared by HDR in 1993.

The SEVRDS/Santan Channel Project drainage area contributing to this portion of the Santan Freeway drainage system is approximately 93 square kilometers. The area is bounded on the west by I-10, on the east by the Union Pacific Railroad (formerly Southern Pacific Railroad), on the north by the Western Canal and on the south by the Santan Freeway. The 1989 model schematic in Appendix A shows the general routing details, whereas, the 1992 schematic shows

[3] HDR's 1993 General Plan for the Santan Freeway included a drainage channel from Basin B to the Gila Drain Floodway that would be constructed within the Gila Drain right-of-way. The Gila Drain flows were diverted to a parallel 60-inch pipeline.

the modifications for the Gila Drain Alternative that directed off-site and on-site flows from Basin G southward and westward to the Gila Drain.

The majority of the watershed is urbanized. However, substantial tracts of agricultural land are present within the watershed. Due to agricultural land leveling and the development of street networks, the drainage area has lost the majority of its natural drainage corridors. Consequently, storm water runoff exceeding the retention requirements generally flows westerly and southerly in the major streets until a barrier is reached, such as an irrigation canal or railroad embankment. The structure of the model incorporates the impact of barriers and other factors to determine appropriate routing paths and concentration points as shown in the model schematics.

3.3 Wood/Patel Modifications to the HDR Hydrologic Model

The following text is from *Initial Drainage Report, Santan Freeway* (Wood/Patel, September 12, 1996 pp.7 and 8):

"The HEC-1 model developed by Wood/Patel in the 1996 Initial Drainage Report was based on the Alternative "C" in the 1995 SEVRDS report by HDR."

"The detention basin subroutine in the HDR model was modified to simulate the following operations:

1) A divert operation to remove the first 30,800 m3 of flow arriving at Basin "B".

2) A second divert operation to remove any remaining flow from item 1 that exceeds 22.65 m^3/s.

3) A design flow for the outfall channel of 22.65 m^3/s."

HDR further modified the HEC-1 model to design the basin complex as described in Section 5, while maintaining Wood/Patel's basic volume (30,800 m3) and flow (22.65 m^3/s) criteria.

3.4 Wood/Patel First Flush Basin Hydrologic Analyses

The following text is also from *Initial Drainage Report, Santan Freeway* (Wood/Patel, September 12, 1996 pp. 8 and 9):

"The design of the water quality basin required estimation of the volume of the "first flush", or the initial runoff from the watershed carrying non-point-source pollutants. The design team could not determine an official regulatory definition of the first flush volume. The most reasonable definition of the first flush volume was the following: "The first 6.35 mm of runoff generated by the effective watershed." The effective watershed was defined as the area that directly contributes to a point of interest (i.e., developments with detention/retention areas behind canal and railroad embankments, areas behind depressed freeways, bermed agricultural fields, etc. were eliminated). Once the effective area was identified, the following formula was utilized to determine the first flush volume:

$$V = 0.00635 * A * 10{,}000$$

where V = volume (m^3);
A = area (hectares).

The contributing area from undeveloped land directly contributing to the water quality basin was estimated to be 4.72 square kilometers, giving a first flush volume of approximately 30,800 m^3.

It should be noted that as the watershed becomes urbanized the first flush volume will decrease. The majority of the long term first flush volume will consist of the flows from Santan Freeway on-site drainage system and major streets within the Cities of Chandler and Tempe."

Wood/Patel's HEC-1 analysis to determine the "first flush" volume is included in Appendix C.

HDR's basin design includes the capture of the "first flush" volume exceeding 30,800 m^3 (25 ac-ft).

3.5 Results of the Hydrologic Analysis

The 100-year run summary printout of the HEC-1 model is included in Appendix A. Key off-site peak discharges are summarized in Table 1.

TABLE 1
100-YR Peak Discharges for Santan Freeway
Santan Channel Project

Location	Concentration Point (See Figure 3)	Q_{100} (cfs)	Q_{100} (m3/s)
Price/Santan TI	Cinter	938	26.6
McClintock Road	CMCLN CMCLN	1332	37.7
Rural Road Alignment	COMB1	1338	37.9
Kyrene Road	COMBB	2221	63.2
56th Street	OUTLC	719	20.4
Basin B Inflow	INBB	2885	81.7
Basin B Overflow Weir	DIVERT	2077	58.8
(3) 10'x4' RCB to Outfall Channel	OUTFL	804	22.8
West I-10 at Pecos Road	I10W	816	23.1
I-10 @ Gila Drain Floodway	RT10W RT10W	813	23.0

4.0 HYDRAULIC ANALYSIS (Provided by Wood, Patel & Associates, Inc.)

4.1 Santan Channel Description

The Santan Freeway offsite drainage system collects surface runoff from the watershed to the north of the Santan Freeway, pump station discharges from east of the Price Freeway, and onsite flows from the Santan Freeway. Storm water is routed through a network of detention basins that discharge flow into the outlet channel that conveys the flow to the Gila Floodway. The Santan offsite drainage system was divided into the following four segments: 1) excavation of storage and treatment basins (Phase 1); 2) outfall channel/Reinforced Concrete Box Culvert (RCBC) from Basin B to 1-10 RCBC and along 1-10 to the Gila Floodway (Phase 2); 3) collector channel along the north side of Santan Freeway from the Stellar Airpark to just east of the railroad tracks at 56th Street (Phase 3A); and 4) the RCBC/collector channel from Price Road to the Stellar Airpark (Phase 3B).

This section covers the hydraulics of the south reach (Phase 2) of the Santan Channel which begins at the upstream end of the 3-bbl 3.0 m x 1.2 m "Basin B" outfall box (3 - 10' x 4' RCBC). The design capacity of the channel downstream of the RCBC is 22.65 cms (800 cfs, the maximum flow rate from the collection system downstream of Basin B). A future peak flow rate of 4.25 cms may discharge into the outfall channel from the Gila drain system for a combined flow rate of 26.90 cms (950 cfs). The outfall of the box transitions into a trapezoidal channel with a 2.5-meter bottom width and 1:2 side slopes. The channel maintains this cross section for approximately 767 meters at which point it transitions into a box culvert.

An SRP irrigation line passes through the channel approximately 190 meters upstream of the 56th Street box culvert inlet. This 406-mm (16") steel line is located near the top of the channel, slightly above the hydraulic grade line (HGL) and below the energy grade line (EGL). SRP was unable to cross at a high enough elevation to avoid impacting the channel however, if the flow from the Gila Drain system is eventually taken into the Santan Channel, this pipe will be removed. The box culvert from 56th Street to I-10 is a 952 meter long double 3.0 m x 2.4 m RCBC (double 10' x 8' RCBC) and is located under the Pecos Road alignment. It crosses under the Union Pacific railroad (UPRR), 56th Street, and Interstate 10. This box culvert then outfalls through a combination headwall which will provide for the future City of Phoenix 48th Street system connection. The box culvert outfall transitions into a 2.5-meter bottom width, 1:2 side slope trapezoidal channel approximately 1006 meters in length. This channel then transitions to a double 3.0 m x 2.1 m RCBC outfall structure (2 - 10'x7' RCBC) which will incorporate a riprap pad at the downstream end to help control erosion as the flow discharges into the existing Gila Floodway facility.

The transition from the double 3.0 m x 2.4 m I- I 0 RCBC (double 10' x 8') to the open channel on the west side of 1-10 was designed to accommodate the future single 3.0 m x 2.4 m RCBC (single 10' x 8') outfall from the City of Phoenix Basin 15. Basin 15 is presently configured as a retention basin. In the future, the basin may be dewatered post-event to the Santan Channel at this location at a maximum rate of 2.83 cms. The Basin 15 outflow, therefore, does not impact the design of the Santan Channel. (Personal Comm. - J. Zovne).

4.2 Channel Design Assumptions

The design discharge of 22.65 cms used for the hydraulic analysis of the south reach of the Santan Channel was based on the anticipated peak discharge to the outfall channel at "Basin B". Flows in excess of this discharge are assumed to spill over into the basin and be detained until after the peak passes, and pumped out of "Basin B" into the outfall channel. The "Basin B" outfall box has a 1370 mm (54") stub-out to allow connection of the pump station discharge conduit in the future.

4.3 Channel Geometry

All open channel designs presented in this report utilize a 4-point trapezoidal cross-section with 1:2 side slopes and a 2% cross-slope on the bottom of the channel. Typical channel sections are shown in the 100% plan set which is included in this report.

4.4 Channel Slope

Aerial mapping for the northern portion of the Santan Freeway alignment and the western portion of I-10 was performed as part of this project (C.I. = 0.2 m). The outfall elevation at the Gila Floodway was established at 346.7 m. Channel slopes were established to minimize earthwork, effectively utilize available right-of-way, provide flow velocities between 1 m/s and 3 m/s, provide required freeboard, and provide a gravity outfall for the water quality basin. Manning's "n" values of 0.013 and 0.016 were assumed for RCBC's and concrete lined channels, respectively.

4.5 Freeboard

Channel freeboard is defined as the additional channel depth available between the design water surface elevation and the top of the channel bank. Freeboard provides a safety factor for variations in the assumed hydrologic and hydraulic design conditions, as well as for containment of wave action associated with flowing water. For the purpose of this study, the channel was designed to provide a minimum of 0.3 m of freeboard for the subcritical flow conditions. In most cases, however, the freeboard is at or above 0.60 m. Table B4 of Appendix B shows the freeboard at various points along the channel alignment.

4.6 Bank Lining

The drainage system is concrete lined throughout its entire length. Based on the channel velocities from the HEC-RAS hydraulic model and the necessity for maintenance vehicles to gain access to the channel, a 152-mm channel lining will be used for all trapezoidal sections. This channel lining design is in accordance with ADOT guidelines for lined channels. The RCBC's are designed in accordance with the ADOT standards and specifications with the exception of the UPRR RCBC that will be designed in accordance with the requirements of the Union Pacific Railroad.

4.7 Maintenance Access

A 5-meter wide maintenance road is included along the west side of the channel that parallels I-10. The channel section between 56th Street and the 3-3.0 m x 1.2 m RCBC has a 4.5 meter wide maintenance road on the north and west sides and a 3 meter wide SRP access road on the

south and east sides. In order to provide access to the channels for periodic maintenance work, access ramps are located at regular intervals throughout the project upstream and downstream of channel crossings (RCBC's, etc.). At all ramps, a minimum 3.6-meter wide access road will be maintained.

The gates along the channel segment which parallels 1-10 will be locked and will be for ADOT access only. For the segment from 56th Street to the 3-3.0 m x 1.2 m RCBC, the gates along the north and west sides will be double locked for both ADOT and City of Chandler access; along the south and east sides of this segment, the maintenance road is located outside of the fence. Refer to the 100% plans for the locations of access ramps.

4.8 Riprap Protection at Channel Outfall

An analysis was performed to determine the need for a stilling basin at the outfall of the channel. The conclusion of this analysis was that a basin was not necessary to reduce channel velocities or dissipate energy. Therefore, a horizontal riprap pad has been designed to reduce potential scour at the box outlet. The length of the pad was determined to be three times the width of the outlet. See Appendix B for calculations of erosion control measures.

4.9 Hydraulic Computer Model

A HEC-RAS computer model was developed for the drainage system. The HEC-RAS model assumes that the drainage system upstream will intercept and store all flows in excess of 22.65 cms. An additional analysis was performed for an additional 4.25 cms entering the channel at Station 3+511 (26.90 cms total) to simulate the maximum additional flow which would be carried if the Gila Drain were to outfall into the Santan Channel at some time in the future. The starting water surface elevation was provided by HDR and was based on their Gila River and future Gila Floodway analyses. Hard copies of output files for the models are contained in Appendix B. Floppy disks containing HEC-RAS input and output files are contained in the back pocket (FCDMC copy only).

Refer to Figure B1 for a general overview of the Santan Channel alignment and HEC-RAS stationing. HEC-RAS stationing was set at plan stationing plus 1000 meters.

4.10 Superelevation of Water Surface

Superelevation calculations were performed for the curved portions of the channel to determine whether the increased water surface elevation at the outside of the curve is sufficient to violate the minimum freeboard requirements. It was determined that the maximum increase is approximately 40 mm (1.6 inches) and that this will not require any modification of the channel design. Refer to Table B4 for a summary of freeboard and superelevation calculations.

5.0 BASIN COMPLEX CONCEPTUAL DESIGN

5.1 General Plan

The general plan for the basin complex is shown in Figure 4.[4] The 100-year HEC-1 model was used to define the inflow rate and volume to the basin complex, and to evaluate the storage, overflow and outflow routings of the input hydrograph. Figure 4 shows the Phase 1 and Phase 2 facilities that have been designed as presented in this report. It also shows the Phase 3 facilities in and near the basin complex that have been designed to a conceptual level.[5] As mentioned, the Phase 3 design and construction schedule is currently under review by ADOT.

The excavation and piping for the wetlands treatment cells has been included in the Phase 1 and Phase 2 designs, respectively. A plan for the vegetation to be planted in the cells and the maintenance, operation and monitoring requirements are summarized in Section 5.5. It is recommended that the vegetative treatment system be installed in Phase 3 when the Kyrene South Pump Station[6] is constructed and thus an assured water supply is available.[7]

In April 1997, HDR prepared a Technical Memorandum regarding the review of the 30% Plans. The Technical Memorandum detailed changes to the 30% plans that HDR was proposing prior to starting work on the Phase 2 design. Figure 4 is an updated plan from the one presented in the Technical Memorandum that shows the final design of the Phase 1 and Phase 2 facilities, as well the concept design of the remaining Phase 3 facilities. Details of the design of the facilities shown in Figure 4 are presented in this section.

5.2 Gila Drain Diversion

The Gila River Indian Community (GRIC) is constructing a portion of the Pima-Maricopa Irrigation Project (P-MIP) in the Phase 2 contract. In the future, the P-MIP project may divert the Gila Drain flows into its pipeline as shown in Figure 3. However, in emergencies, the P-MIP pipeline may not be able to accept some or all of the potential future flows of the Gila Drain. P-MIP has therefore requested that ADOT allow P-MIP to divert the up to 150 cfs[8] to the Santan Channel on an emergency basis. Because the 150 cfs must be added to the 100-year design peak flow downstream from the point of diversion, HDR evaluated the impact of the additional flow on the channel design. The primary concern is that the channel will have sufficient freeboard with the additional flow, even though the potential that the full diversion would occur at the same time as the 100-year peak is exceedingly small.

The impact was evaluated using the HEC-RAS model (See Appendix B). Available freeboard was evaluated for flows of 800, 900, 950 and 1050 cfs using then current 60% design HEC-RAS model for the Outfall Channel. As can be observed in Table 2, the available freeboard was

---

[4] Figures 4,5 and 6 are the end of this section.

[5] The level of the concept design for the Phase 3 facilities in Figure 4 is approximately 30%.

[6] The name has been changed to "Kyrene South", as ADOT has an existing "Kyrene" pump station on US 60.

[7] The pump station is needed to transfer water within the basin complex, including supplemental water required during the establishment period.

[8] Metric units have been dropped for clarity in Section 5.

greater than the minimum required freeboard of one foot (0.3m) for the combined flow of 950 cfs (that is, 800 cfs design flow plus 150 cfs diverted flow).[9]

Based upon this analysis, the HDR concluded that the Gila Drain flows could be accommodated without redesigning the channel. Wood/Patel then evaluated the freeboard for the final design of the Outfall Channel and the results were similar to HDR's as reported in Appendix B.

5.3 Basin Piping and Flow Routing

Figure 4 shows the Phase 1,2 and 3 facilities in the Basin B complex. The primary facilities include the following:

1. The (7) 10'x 8' Santan Freeway crossing RCB is designed to a concept level for Phase 3. An HY8 analysis is included in Appendix A.

2. The (2) 8'x 8' Equalization Basin RCB is designed to a concept level for Phase 3. An HY8 analysis is included in Appendix A. The invert elevation of the Outlet Channel (1151 feet) forces impoundment and retention of first-flush flows up to 27.8 acre-feet. An examination of the inflow hydrograph shows that this culvert should be designed for a peak flow of about 1000 cfs that occurs when the Equalization Basin is nearly full.

3. The 1000-foot long Basin B inflow Diversion Weir is designed to a concept level for Phase 3. A weir rating curve is developed in Appendix A for the HEC-1 routing.

4. The (3) 10'x 4' Outlet Channel Control RCB <u>is included in Phase 2.</u> The Outlet RCB forces flows exceeding the Outfall Channel design capacity of 800 cfs to be diverted into Basin B. HY8 was used to develop the outlet RCB rating that is combined with the weir rating curve in the HEC-1 model. The RCB and combined ratings are included in Appendix A.[10]

5. The piping from Equalization Basin to Water Quality Basin cells consists of 24-inch RCP with sluice gates to control inflow to the cells and outflow from the cells to Basin B. This system is included in Phase 2. An HY8 run is included in Appendix A. The flow capacity of the 24-inch pipes greatly exceeds the maximum flow anticipated for the cells. The 24-inch pipe meets ADOT's recommended minimum size for drainage systems.

---

[9] River Stations 1200 to 1260 in Table 2 are in the enclosed culvert section. The culvert section can be surcharged as the top of the culvert is generally more than three feet below grade throughout this section.

[10] Many configurations of Outlet RCB and Weir were developed and run in HEC-1 to obtain the final configuration shown in Figure 4. The primary concerns were to (1) limit outflows to 800 cfs, (2) limit the high water level at the inlet to the Santan RCB to below existing grade at that location and (3) divert no more the than the existing available storage capacity of Basin B. These conditions are all met in the design shown in Figure 4.

Gila River Indian Community - PMIP
ADOT: Phase 2 Santan Channel Project
Gila Drain to Santan Channel Overflow Channel Analysis
Oct. 31, 1997

TABLE 2

GILA DRAIN
DIVERSION ANALYSIS

River Station	"A-3" Sta.	Channel Inv. Elev.	Top of Chnl. Elev.	Top of RCB Elev.	W.S. Elev.				Available Freeboard (meters).			
					Q = 800 cfs	Q = 900 cfs	Q = 950 cfs*	Q = 1050 cfs*	Q = 800 cfs	Q = 900 cfs	Q = 950 cfs*	Q = 1050 cfs*
1050	0+177.000	346.768	350.168	n/a	349.33	349.38	349.41	349.46	0.84	0.79	0.76	0.71
1100	0+620.000	346.97	350.37	n/a	349.45	349.52	349.55	349.63	0.92	0.85	0.82	0.74
1110	0+807.000	347.093	350.861	n/a	349.5	349.58	349.61	349.69	1.36	1.28	1.25	1.17
1130	0+860.000	347.177	351.000	n/a	349.53	349.61	349.65	349.73	1.47	1.39	1.35	1.27
1140	1+042.181	347.247	351.447	n/a	349.59	349.67	349.71	349.80	1.86	1.78	1.74	1.65
1150	1+062.261	347.26	351.850	n/a	349.58	349.66	349.70	349.77	2.27	2.19	2.15	2.08
1200	1+310.240	347.435	n/a	349.873	349.70	349.79	349.84	350.05	0.17	0.08	0.03	-0.18
1215	1+427.740	347.526	n/a	349.964	349.76	349.86	349.91	350.19	0.20	0.10	0.05	-0.23
1230	1+545.240	347.617	n/a	350.055	349.82	349.93	349.99	350.33	0.24	0.13	0.06	-0.27
1245	1+662.740	347.708	n/a	350.146	349.89	350.01	350.06	350.47	0.26	0.14	0.09	-0.32
1260	1+780.240	347.799	n/a	350.237	349.95	350.08	350.14	350.61	0.29	0.16	0.10	-0.37
1300	2+034.822	348.637	351.24	n/a	350.05	350.21	350.32	351.14	1.19	1.03	0.92	0.10
1320	2+095.000	348.682	351.282	n/a	350.53	350.64	350.69	351.24	0.75	0.64	0.59	0.04
1500	2+340.000	348.853	351.45	n/a	350.71	350.81	350.86	351.30	0.74	0.64	0.59	0.15
1772.3	2+517.692	349.01	351.61	n/a	350.88	350.98	351.03	351.39	0.73	0.63	0.58	0.22
1810	2+542.000	349.03	351.63	n/a	350.90	351.01	351.06	351.40	0.73	0.62	0.57	0.23
1817.69	2+547.308	349.04	351.64	n/a	350.91	351.01	351.15	351.46	0.73	0.63	0.49	0.18
2090	2+725.000	349.201	351.80	n/a	351.08	351.18	351.25	351.52	0.72	0.62	0.55	0.28
2100	2+742.00	349.217	351.82	n/a	351.22	351.33	351.35	351.60	0.60	0.49	0.47	0.22
2120	2+802.108	349.271	351.87	n/a	351.19	351.30	351.33	351.58	0.68	0.57	0.54	0.29

* Values in Table shown for Q = 950 & 1050 cfs include 150 cfs added at the Gila Drain Overflow Channel (R.S. 1810).

Filename: c:\project\gila\freebrd.xls

6. The Kyrene South Pump Station concept design is presented in Section 5.4.

7. The vegetated treatment systems design concept is presented in Section 5.5.

8. The Basin B 54-inch RCP gravity discharge pipe to the pump station is included in Phase 2 except for the portion that connects to the pump station as shown in Figures 4 and 5. An HY8 analysis is included in Appendix A.

9. The 54-inch RCP Discharge Conduit that will convey pumped discharges to the Outfall Channel is shown in Figure 4. The pipeline will discharge treated storm water and Basin B retained storm water to the Outfall Channel. The outlet of this pipe can be regarded as the "point of compliance" for the discharge permit. (See Appendix F).

The routing of flows through the basin complex is as follows:

1. Flows from the Santan Collector Channel are directed to the Equalization Basin until the capacity of 27.8 acre-feet is reached, at which time additional flows are allowed to bypass to the outflow channel.

2. Additional flows will continue to bypass until the overflow weir level is reached, at which time the flows will be split between the bypass channel and the Basin B overflow. At the basin high water level the flow to the bypass channel is limited to approximately 800 cfs.

3. Flows collected in the Equalization Basin can be retained as long as desired to allow for settling of the "first flush" flows. This accomplishes part of the "first flush" treatment because pollutants are often attached to soil particles. It should also reduce sedimentation in the vegetated treatment cells.

4. Discharge from the Equalization Basin to the vegetated treatment cells will be regulated by manually operated sluice gates on 24-inch RCP transfer pipes. Discharge rates will be governed by residence time required to achieve desired treatment levels in the cells and other considerations, such as mosquito control and make-up water requirements.

5. Flows from the treatment cells will be discharged to Basin B through gated 24-inch discharge pipes. The outlet gates will be used primarily to control the water levels in the cells.

6. The treated flows will be discharged to the Kyrene Pump Station through the 54-inch Basin B evacuation pipe. There will be two low-flow submersible pumps in the pump station to evacuate the treated flows to the outflow channel. These will be in the size range of 2000 gpm each. The treated flows that are captured in Basin B can also be recycled to the Equalization Basin, if desired.

7. The flows detained in Basin B will be evacuated to the Kyrene Pump Station. The maximum flow in the 54-inch evacuation pipe is estimated to be 160 cfs that will evacuate the full basin in approximately 36 hours. The 54-in pipe will be gated at the inlet with a manually operated sluice gate. Figure 4 also shows that an emergency gate is recommended to be installed in a gate structure near the pump station. The emergency gate will normally be open, but will be closed automatically if a preset maximum level is reached in the wet well. This will provide added protection to prevent flooding of the freeway in the event that the combined freeway and Basin B inflows to the station exceed the nominal station capacity of 200 cfs.

5.4 Kyrene South Pump Station

The configuration of the Kyrene South Pump Station as shown in Figure 5 is described in ADOT's *Storm Water Pump Station Design Documents developed* by HDR in 1991. The Kyrene South station is very similar to the original concept for this station as described in the *Gila Drain Alternatives Concept Drainage Report* (1993). The station has 4-50 cfs capacity diesel or natural gas[11]-driven vertical turbine pumps and a 10,000 gpm[12] low-flow submersible pump. The pump station will be normally configured to evacuate the freeway storm water to the Equalization Basin through the discharge box. The discharge box has two manually operated sluice gates, one normally open to the Equalization Basin and one normally closed to the 54-inch Discharge Conduit.

If the treatment cells are operating, the manual gate on the 54-inch Basin B evacuation line will be partially opened to drain these flows to the pump station. The treated flows can either be pumped to the Equalization Basin for recycling or discharged to the Outfall Channel. Electric operated valves on the 2000 gpm pump discharge lines will allow treated flows to be directed either to the Equalization Basin or to the Discharge Conduit.

If Basin B is holding storm overflows that must be evacuated, the manual gate on the Basin B evacuation pipe will be opened as necessary (i.e. wide open) to evacuate the retained to the pump station. In this case the gates in the discharge box will be reversed (i. e. the Equalization Basin sluice gate closed and the Discharge Conduit sluice gate opened) to direct the flows to the Discharge Conduit.

A optional back-flow prevention device may be desired at the discharge end of the 24-inch RCP discharge pipe from the cells to Basin B to prevent back-flow into the cells when Basin B fills. This is an added precaution because the vegetation in the cells can tolerate short periods of inundation. Basin B will receive overflows very infrequently and perhaps not at all during some years. Disadvantages of back-flow prevention include additional maintenance requirements and additional head loss that may interfere with flow control during normal operation. A rubberized

[11] ADOT currently prefers natural gas engines if there is a high-pressure gas line available at a reasonable cost. Southwest Gas has been contacted to determine the cost of supplying natural gas to this site, but has not provided that information at this time.

[12] The single 10,000 gpm submersible low flow pump will be replaced with two 2,000 gpm submersible pumps for this station to match anticipated low flows from the treatment cells.

"check-valve" such as Tideflex manufactured by the Red Valve Company may be the preferred option in this case. This option can be added in Phase 3 , if desired.

5.5 Vegetated Treatment Cells

As a condition of the permit from the Gila River Indian Community to discharge storm water to the Gila Floodway, the Stakeholders have agreed to provide a storm water treatment system. The conditions of the permit are defined in Appendix F.

A report by Dr. Martin Karpiscak entitled *Santan Treatment Wetlands* (June, 1998) is included in Appendix D. The report explores various options available for the design of the vegetated treatment cells. Although two cells have been provided so that one cell can be serviced while the other is operating, the two cells may also offer the opportunity to test two different vegetated treatment systems. It is anticipated that the final decision on the type of vegetated cell to be constructed in Phase 3 will be made by the SEVRDS Stakeholders based upon the recommendations that are presented in Dr. Karpiscak's report and summarized herein.

Dr. Karpiscak presents three alternatives for the treatment cells: 1) a traditional surface flow system, 2) a "hybrid" surface and subsurface flow system and 3) an untested "arid wetlands" system.

At the present time the "hybrid" system is recommended for this project, as shown in Figure 6. This configuration combines the treatment performance of traditional surface flow system while allowing subsurface flow at critical times for mosquito control. Normal water levels would be maintained 6 to 12 inches above the gravel substrate surface. However, if mosquitoes become a problem in the summer, the water level can be drawn down two to four inches below the gravel surface. This would reduce the mosquito-breeding habitat and at the same time allow greater mosquito control to occur in the deep zones. The deep zones can be stocked with larvae eating fish such as Gambusia or treated with larvicides. Disadvantages of this system are that the gravel substrate can become plugged over a period of time. A bypass system is recommended to allow cells to be bypassed if plugging occurs. The bypass piping system concept is shown in plan in Figure 4.

Recommended vegetation for the hybrid system is a mixture of soft-stem bulrush, common reed and cattail as outlined in the *Wetlands* report. This type of vegetation requires a continuous water supply and supplemental water will be required. Storm water runoff events are too intermittent in Phoenix to provide an assured water supply. The Basin B site is served by the Salt River Project irrigation system. Irrigation water can be supplied to the site from the existing Pecos canal/drain turnout at the corner of Kyrene and Pecos Roads. The water can be delivered to the Equalization Basin by connecting to the existing concrete-lined vee-ditch along the west side of Kyrene Road. The annual supplemental supply is anticipated to be on the order of 20 to 30 acre-feet.

Seepage from the cells is anticipated to be minimal because the bottom soils are sandy and silty clays with very low permeability (See *Geotechnical Investigation Report – Design of Santan*

Channel, Phase 1, AGRA Earth and Environmental, 11 March 1997). The soils could be rendered virtually impervious by over-excavation and compaction. The discharge permit requires groundwater monitoring. The SEVRDS Stakeholders are to decide where the monitoring wells will be placed in accordance with the permit conditions.

The discharge permit also requires that discharges at the "point-of-compliance" be monitored and sampled. According the permit, the "point of compliance" appears to be the upper end of the Outfall Channel. Another activity of the SEVRDS Stakeholders is to agree upon the location of the "point of compliance" and the parameters of the flow monitoring and sampling system to be installed at that location.

The traditional wetlands treatment system is very similar to the hybrid system, except the planting media is soil and the water level is always held above the planting media. This system may provide somewhat better treatment than the hybrid system but does not offer the mosquito control advantages. This system would not require the bypass piping system. The vegetation, maintenance and operation would be similar to the hybrid system.

The "arid wetland" system would be a flooding type of basin that would contain species that can tolerate dry periods. Since this system has not been tested, the performance is unknown. The potential advantage of this system would be water conservation, as less water is required to keep the vegetation alive. However, there is a risk that it would not provide the treatment that is desired.

Any of the proposed alternative systems will require approximately 20 hours per week to maintain and operate the system. The required maintenance and operation activities are listed on page 44 of the *Wetlands* report. This includes monitoring and sampling such as suggested on page 45 of the report.

The vegetation should not be planted in the cells until there is an assured water supply and the means to transfer and recycle water in the basin complex. Therefore, the pump station should be constructed in Phase 3 unless a temporary pumping system is provided. The supply of water from the Pecos Drain requires a simple connection and an agreement with SRP.

Existing Grade 352.2m (1155.5 ft)

Pump Station 54" Discharge Conduit

Gila Drain Siphon (60")

Design High Water Level = 352.0m (1155.0 ft)

Inv 348.1m (1142 ft)

Forebay Outlet Channel
Inv 350.8m (1151 ft)

(7) 10'x8'x250' RCBC
Q_{100}=81.7cms (2885cfs)

DIVERSION WIER
L=304.8m (1000 ft)
@ 351.65m (1153.7 ft)
Q_{100}=58.8cms (2077cfs)

EQUALIZATION BASIN
Retained Storage Volume=34,300m^3 (27.8acft)
@ 350.8m (1151 ft)
Design High Water=351.9m (1154.4 ft)
Freeboard=0.75m (2.5 ft)
Bottom Elevation=347.5m (1140 ft)

Inv 350.55m (1150.1 ft)

(3) 10'x4'x50' RCBC
Outlet Channel Control
Q_{100}=22.8cms (804cfs)

Inv 347.8m (1141 ft)

Elev 352.65m (Typ)
(1157 ft)

Inv 349.3m (1146 ft)

Inv 347.6m (1140.5 ft)

SANTAN FREEWAY

Outfall Channel

Concrete Spillway

Elev 352.65m (Typ)
(1157 ft)

Freeway
Discharge

Kyrene South Pump Station
Q_{Max}=5.66cms
(200cfs)

Emergency
Gate Structure

Equal Basin
(2) 8'x8'x100' RCB
Q_{DES}=28.3cms (1000cfs)

Gate
Structure
(Manually
Operated)

Equalization Basin
Gravity Drain

Gate
Structure

Basin B
Gravity Drain

RETENTION BASIN B
High Water=351.9m (1154.4 ft)
Retention Storage=522,000m^3 (423acft)
Freeboard=0.75m (2.5ft)
Top Area=23 Acres @ 352.65m (1157 ft)
Inv EL = 344.2m (1129.3 ft)

Gate Structure

Inv 346.6m (1137 ft)

Cell 1 Gravity Drain

Cell 1 0.05% Slope

Cell 2 0.05% Slope

Cell 2
Gravity
Drain

23m

Gila Drain

Gila Drain

Gila Drain

N

Elev 352.65m (Typ) (1157 ft)

Gila River Indian Community

Gila River Indian Community

KYRENE ROAD

Bypass Piping
w/ Gates

WATER QUALITY BASIN
(Two Cells)
Total Top Area=28,788m^2 (7.1 Acres)
Total Bottom Area=9,338m^2 (2.3 Acres)

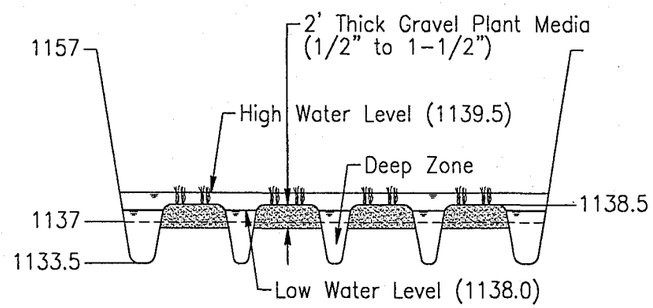

SECTION A–A

TYPICAL "HYBRID" WETLANDS
TREATMENT CELL

LEGEND

——— Phase 1 and Phase 2 Facilities

- - - - - Phase 3 Facilities

ADOT CONTRACT 97-16

	NAME	DATE
DESIGN	JZ	5/98
DRAWN	LJ	5/98
CHECKED	JZ	5/98

HDR Engineering, Inc.

ARIZONA DEPARTMENT OF TRANSPORTATION
INTERMODAL TRANSPORTATION DIVISION

SANTAN CHANNEL DESIGN
BASIN COMPLEX
CONCEPTUAL PLAN

FIGURE 4

ROUTE: 202 L

LOCATION: SANTAN FREEWAY AT BASIN B

SHEET 1 OF 1

MAY 29, 1998
FILENAME: BASIN.DWG

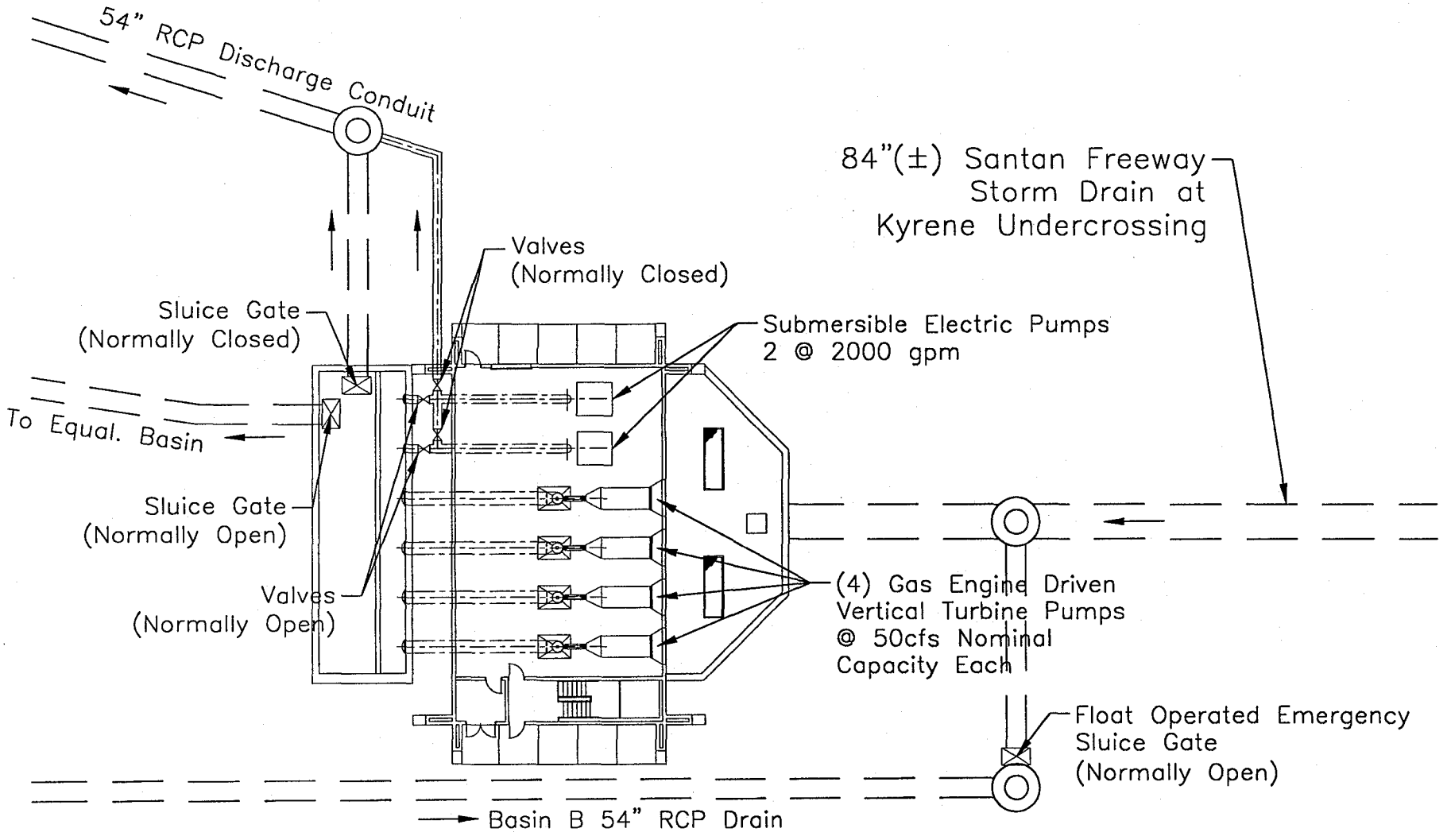

ADOT CONTRACT 97-16

	NAME	DATE	ARIZONA DEPARTMENT OF TRANSPORTATION INTERMODAL TRANSPORTATION DIVISION	FIGURE 5
DESIGN	JZ	5/98		
DRAWN	LJ	5/98		
CHECKED	JZ	5/98		
HDR Engineering, Inc.			KYRENE SOUTH PUMP STATION PLAN	
ROUTE 202L	LOCATION BASIN B / SANTAN CHANNEL PROJECT			SHEET 1 OF 1

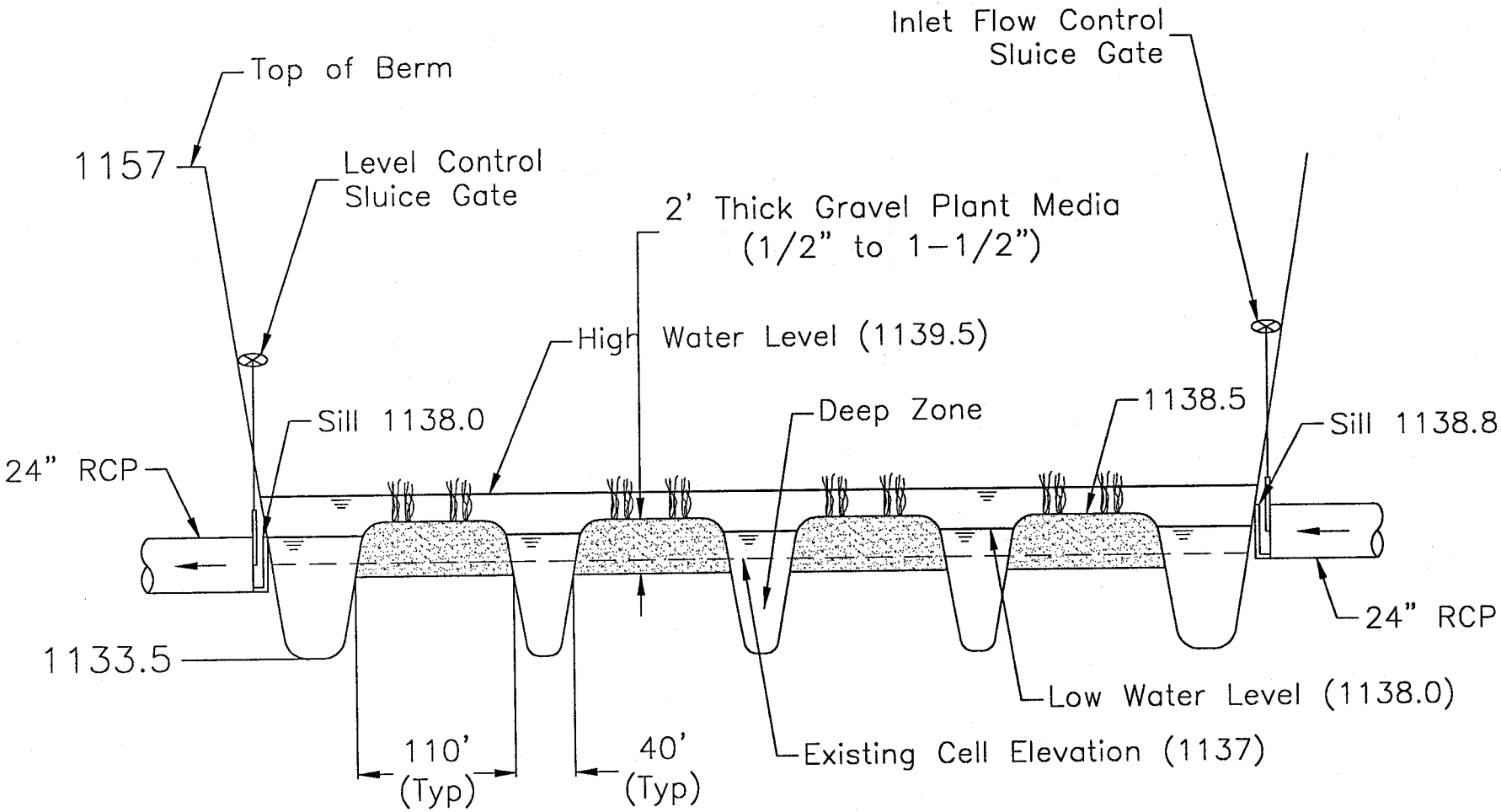

ADOT CONTRACT 97-16

	NAME	DATE	ARIZONA DEPARTMENT OF TRANSPORTATION INTERMODAL TRANSPORTATION DIVISION	FIGURE 6
DESIGN	JZ	5/98		
DRAWN	LJ	5/98		
CHECKED	JZ	5/98	TYPICAL SECTION "HYBRID" WETLANDS TREATMENT CELL	
HDR Engineering, Inc.				
ROUTE 202L	LOCATION BASIN B / SANTAN CHANNEL PROJECT			SHEET 1 OF 1

6.0 EXHIBITS

Phase 1 Basin Grading Project Plans

Phase 2 Santan Channel Plans and Basin Piping Plans

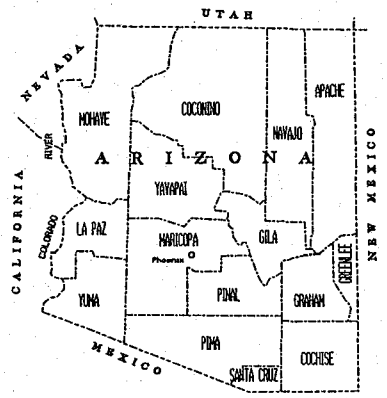

STATE OF ARIZONA
DEPARTMENT OF TRANSPORTATION
INTERMODAL TRANSPORTATION DIVISION
AND
FLOOD CONTROL DISTRICT OF MARICOPA COUNTY

PHASE 1 BASIN GRADING PROJECT
SOUTHEAST VALLEY REGIONAL DRAINAGE SYSTEM
SANTAN CHANNEL PROJECT
CONTRACT NO. FCD 97-02

ADOT RAM 600-7-501
TRACS H4314 01 C

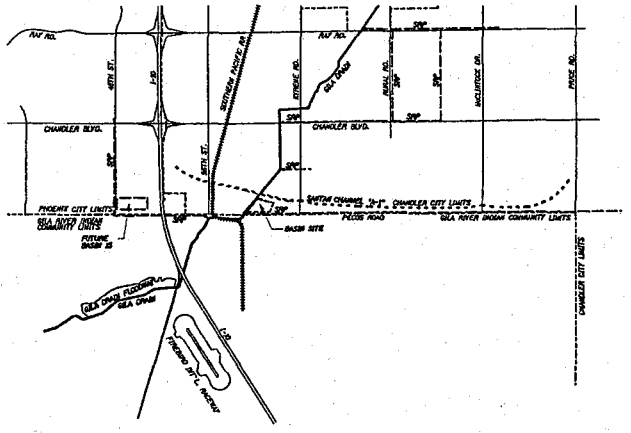

FLOOD CONTROL DISTRICT OF MARICOPA COUNTY
ISSUED FOR PUBLIC BIDDING BY:
CHIEF ENGINEER AND GENERAL MANAGER — DATE
BOARD OF DIRECTORS OF THE FLOOD CONTROL DISTRICT
DON T. STAPLEY - CHAIRMAN
DISTRICT 1 FULTON BROCK DISTRICT 2 DON T. STAPLEY DISTRICT 3 BETSEY BAYLESS DISTRICT 4 JAN BREWER DISTRICT 5 MARY ROSE GARRIDO WILCOX

ARIZONA DEPARTMENT OF TRANSPORTATION
INTERMODAL TRANSPORTATION DIVISION
APPROVED: THOMAS G. SCHMITT
STATE ENGINEER

APPROVED DATE

ASSISTANT STATE ENGINEER

Metric

CONSTRUCTION DISPLAY ON

F.H.W.A. REGION	STATE	PROJECT NO.	SHEET NO.	TOTAL SHEETS	AS BUILT
9	ARIZ.	RAM 600-7-501	2	10	
		TRACS H431401C			

INDEX OF SHEETS

Sheet No.	Sheet Type
G-1.0	Face sheet
G-1.1	Index Sheet
G-1.2	Grading Plan
G-1.3	Grading Plan
G-1.4	Grading Plan
G-1.5	Grading Plan
G-1.6	Grading Plan
G-1.7	Sections
G-1.8	Disposal Site Plan
B-1.1	Boring Plan

GENERAL NOTES

All dimensions and elevations on the plan sheets are shown in meters (m) unless noted otherwise.

The location of existing utilities shown on plans is approximate and have not been verified by potholing or field survey methods. The contractor shall comply with the Blue Stake law regarding location of existing utilities before digging.

All grading shall be done to a tolerance of ±0.03 m.

All utilities and irrigation facilities shown as to remain, shall be protected in place.

	NAME	DATE	ARIZONA DEPARTMENT OF TRANSPORTATION INTERMODAL TRANSPORTATION DIVISION AND FLOOD CONTROL DISTRICT OF MARICOPA COUNTY
DESIGN	K.J. BB	3-97	
DRAWN	DW	3-97	
CHECKED	JZ	3-97	

INDEX SHEET

PROJECT: LOCATION: PHASE I - BASIN GRADING PROJECT

DWG. NO. G- 1.1

CONTRACT NO FCD 97-02

2 OF 10

SA12D5-05

VIEW NAME: SYSTIME DGN SPECIFICATION

REF FILE NAMES:
FILE: d:\temp\temp\SAAMS.dgn
DATE: 28-Mar-97 14:30

F.H.W.A. REGION	STATE	PROJECT NO.	SHEET NO.	TOTAL SHEETS	AS BUILT
9	ARIZ.	RAM 600-7-501	3	10	
		TRACS H431401C			

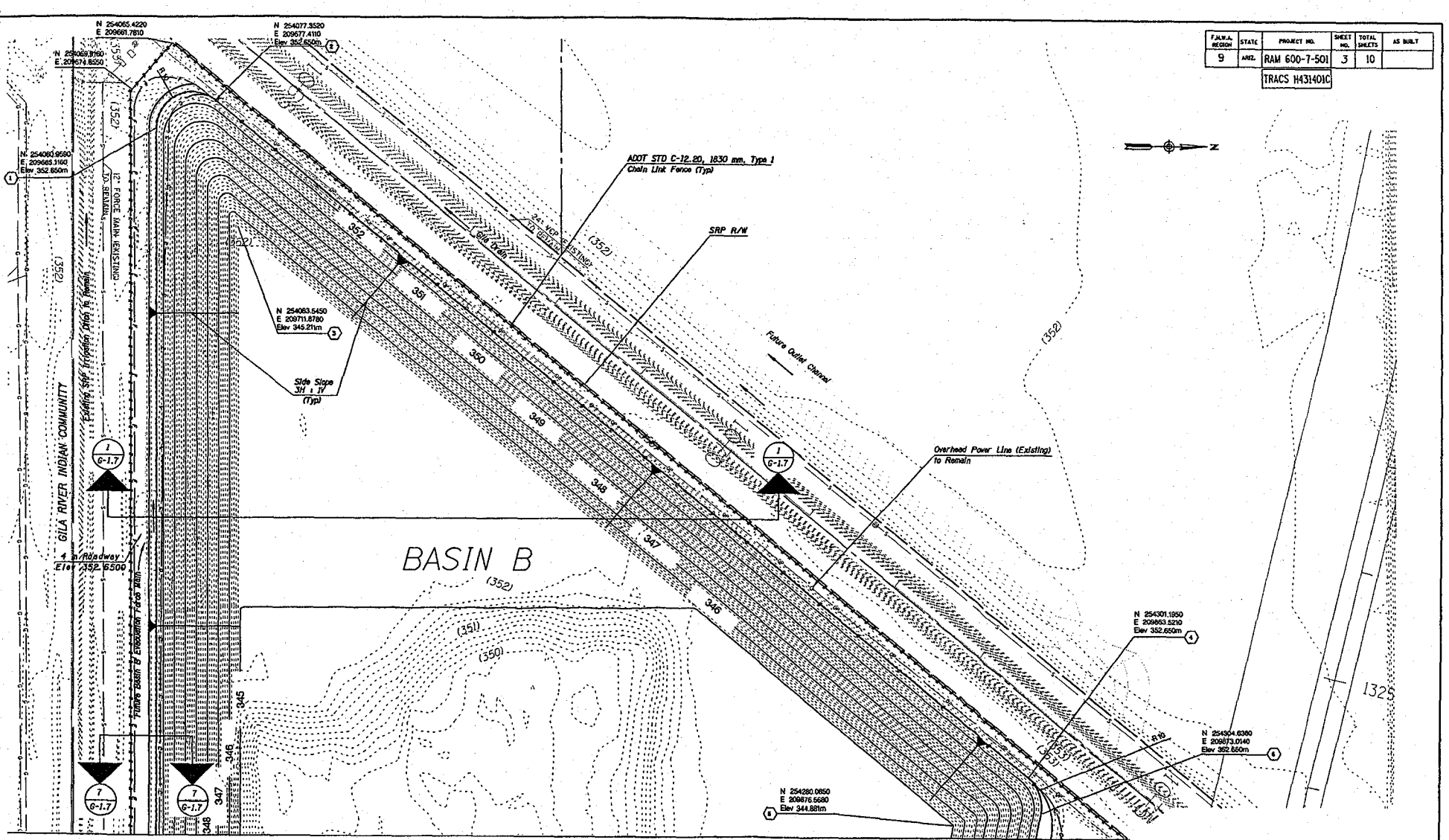

	NAME	DATE
DESIGN	K.J. BB	3-97
DRAWN	DW	3-97
CHECKED	JZ	3-97

ARIZONA DEPARTMENT OF TRANSPORTATION
INTERMODAL TRANSPORTATION DIVISION
AND
FLOOD CONTROL DISTRICT OF MARICOPA COUNTY

HDR
HDR Engineering, Inc.

GRADING PLAN

ROUTE | LOCATION

PHASE I BASIN GRADING PROJECT

DWG. NO. G-1.2

CONTRACT NO. FCD 97-02

3 OF 10

Metric

F.A.H.W.A. REGION	STATE	PROJECT NO.	SHEET NO.	TOTAL SHEETS	AS BUILT
9	ARIZ.	RAM 600-7-501	4	10	
		TRACS H431401C			

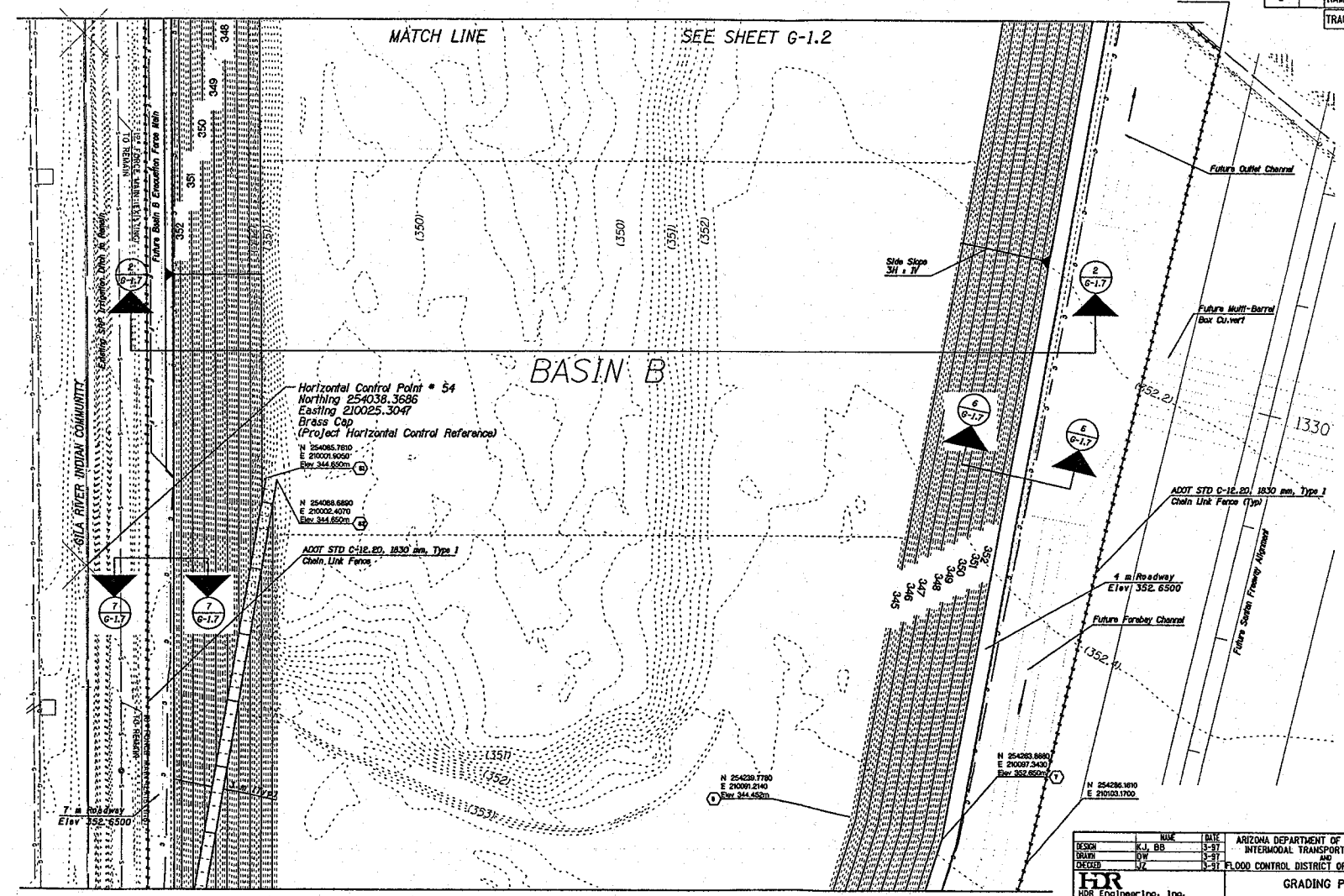

	NAME	DATE
DESIGN	K.J. BB	3-97
DRAWN	DW	3-97
CHECKED	JZ	3-97

HDR Engineering, Inc.

ARIZONA DEPARTMENT OF TRANSPORTATION
INTERMODAL TRANSPORTATION DIVISION
AND
FLOOD CONTROL DISTRICT OF MARICOPA COUNTY

GRADING PLAN

ROUTE | LOCATION

PHASE I BASIN GRADING PROJECT

DWG. NO. G-1.3

CONTRACT NO. FCD 97-02

4 OF 10

Metric

CONSTRUCTION DISPLAY ON

F.H.W.A. REGION	STATE	PROJECT NO.	SHEET NO.	TOTAL SHEETS	AS BUILT
9	ARIZ.	RAM 600-7-501	5	10	

TRACS H431401C

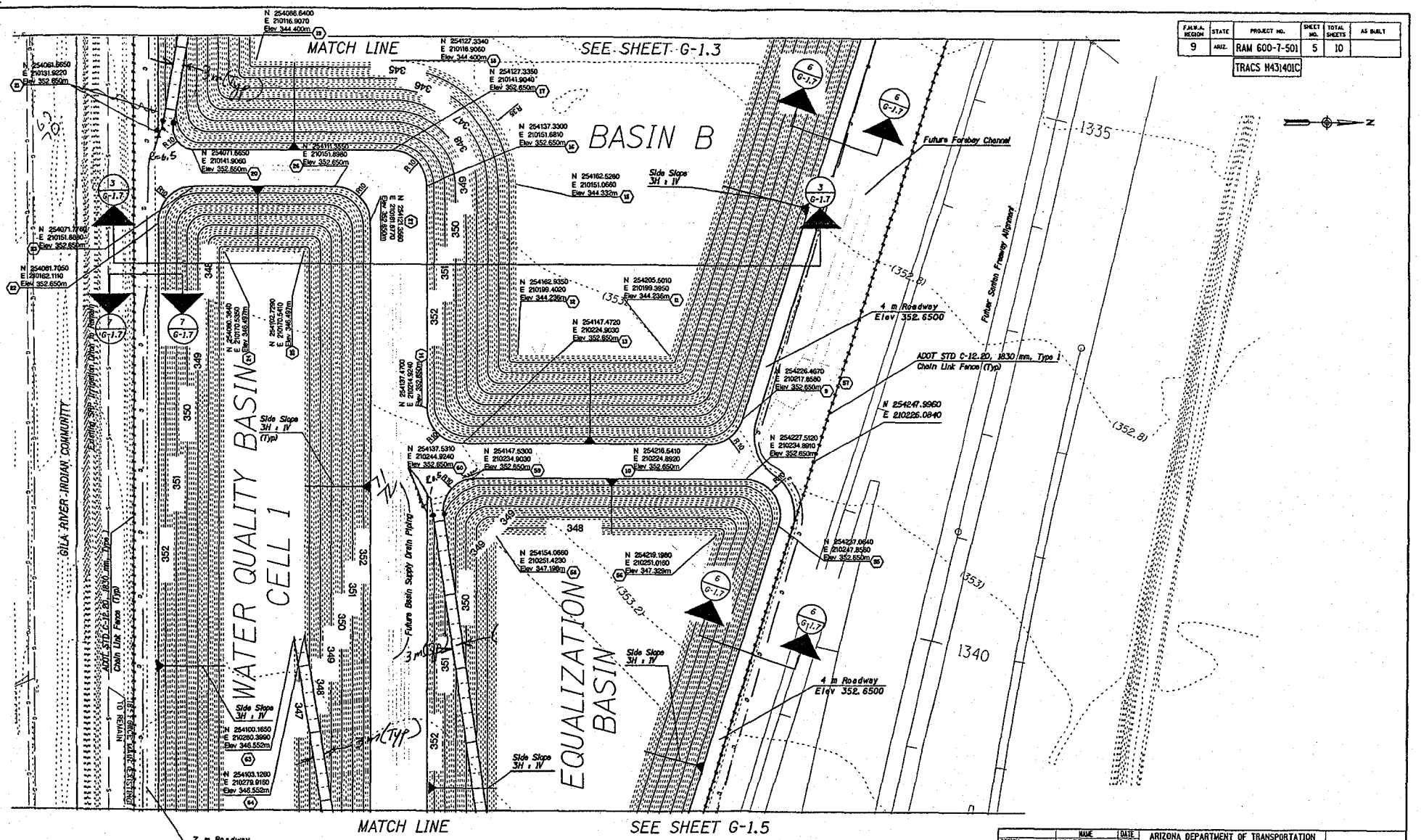

	NAME	DATE
DESIGN	KJ, BB	3-97
DRAWN	DW	3-97
CHECKED	JZ	3-97

HDR Engineering, Inc.

ARIZONA DEPARTMENT OF TRANSPORTATION
INTERMODAL TRANSPORTATION DIVISION
AND
FLOOD CONTROL DISTRICT OF MARICOPA COUNTY

GRADING PLAN

ROUTE | LOCATION

PHASE I BASIN GRADING PROJECT

DWG. NO. G-1.4

CONTRACT NO. FCD 97-02

5 OF 10

F.H.W.A. REGION	STATE	PROJECT NO.	SHEET NO.	TOTAL SHEETS	AS BUILT
9	ARIZ.	RAM 600-7-501	6	10	
		TRACS H431401C			

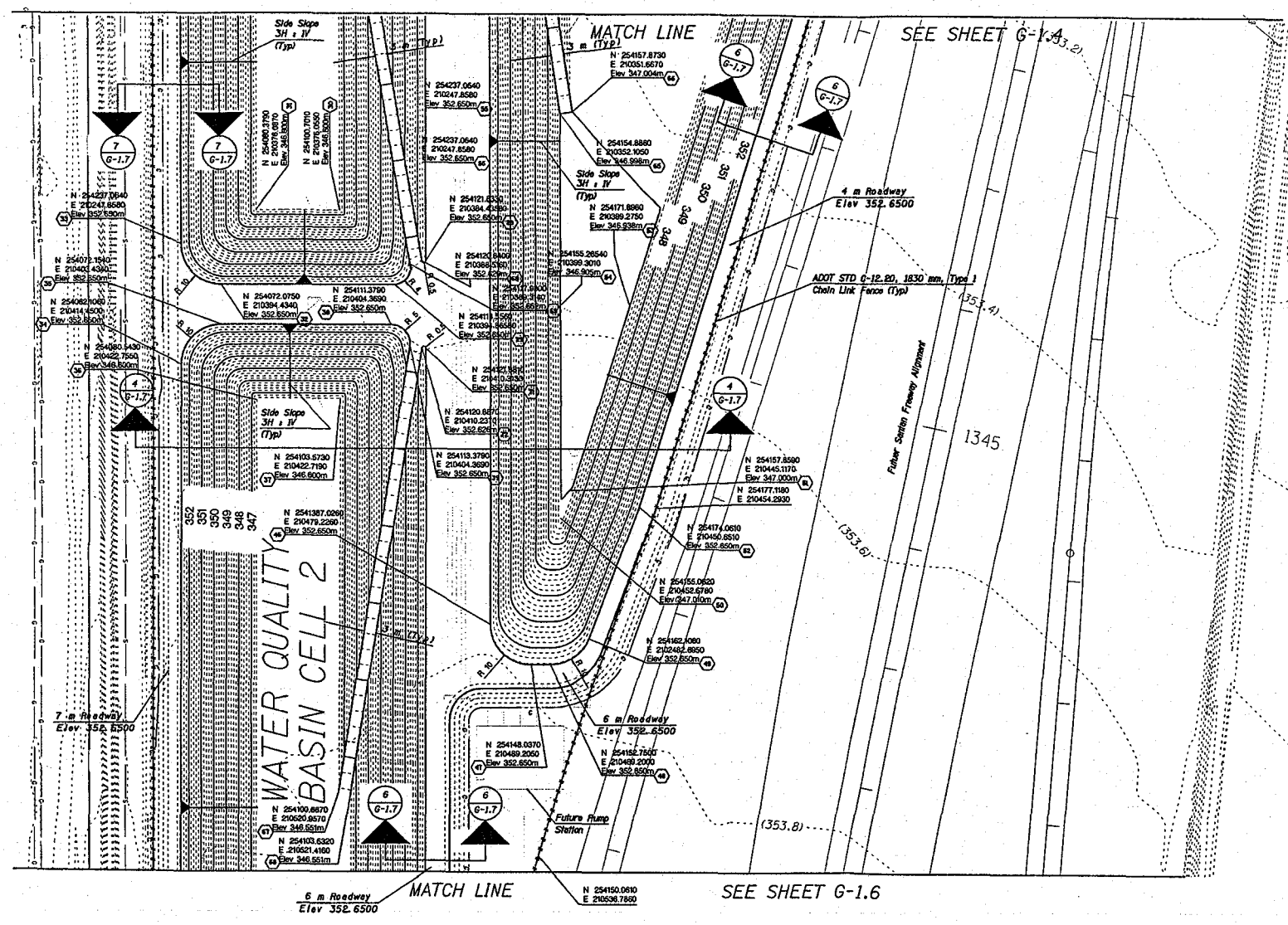

	NAME	DATE
DESIGN	K.J. BB	3-97
DRAWN	DW	3-97
CHECKED	JZ	3-97

HDR Engineering, Inc.

ARIZONA DEPARTMENT OF TRANSPORTATION
INTERMODAL TRANSPORTATION DIVISION
AND
FLOOD CONTROL DISTRICT OF MARICOPA COUNTY

GRADING PLAN

ROUTE | LOCATION

PHASE I BASIN GRADING PROJECT

DWG. NO. G-1.5

CONTRACT NO. FCD 97-02

6 OF 10

Metric

F.H.W.A. REGION	STATE	PROJECT NO.	SHEET NO.	TOTAL SHEETS	AS BUILT
9	ARIZ.	RAM 600-7-501	7	10	
		TRACS H431401C			

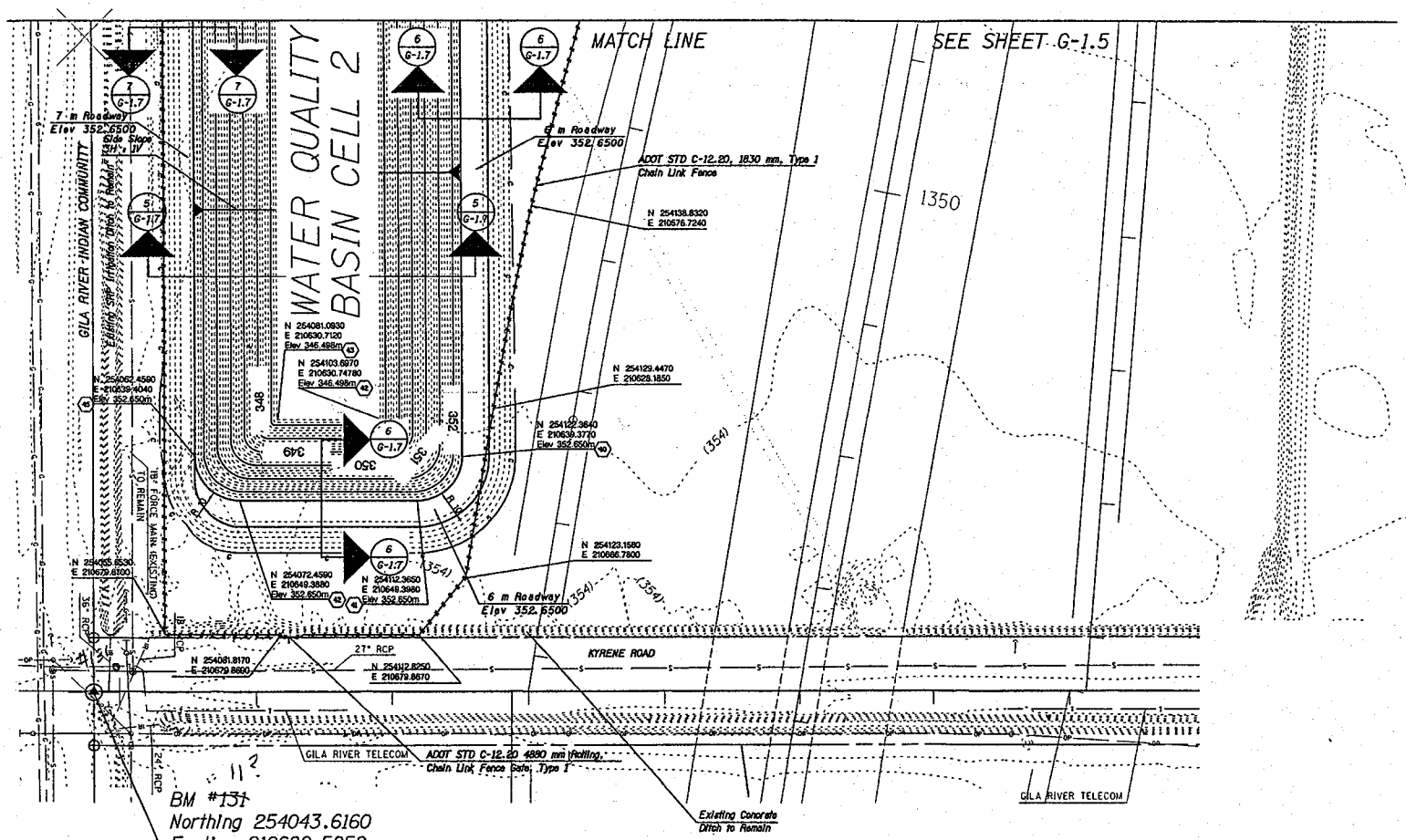

	NAME	DATE
DESIGN	K.J. BB	3-97
DRAWN	DW	3-97
CHECKED	JZ	3-97

ARIZONA DEPARTMENT OF TRANSPORTATION
INTERMODAL TRANSPORTATION DIVISION
AND
FLOOD CONTROL DISTRICT OF MARICOPA COUNTY

HDR Engineering, Inc.

GRADING PLAN

ROUTE | LOCATION

PHASE I BASIN GRADING PROJECT

DWG. NO. G-1.6

CONTRACT NO. FCD 97-02

7 OF 10

Metric

F.H.W.A. REGION	STATE	PROJECT NO.	SHEET NO.	TOTAL SHEETS	AS BUILT
9	ARIZ.	RAM 600-7-501	8	10	
		TRACS H431401C			

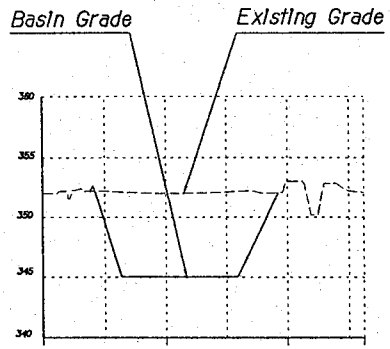

SECTION 1 - 1

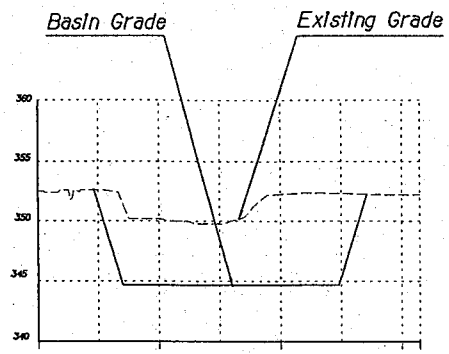

SECTION 2 - 2

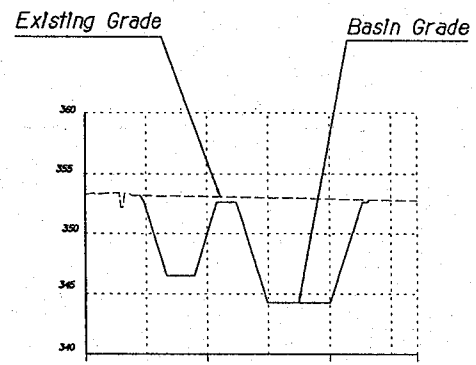

SECTION 3 - 3

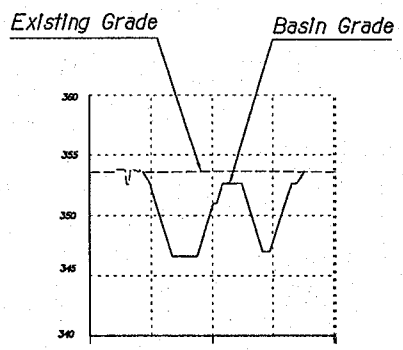

SECTION 4 - 4

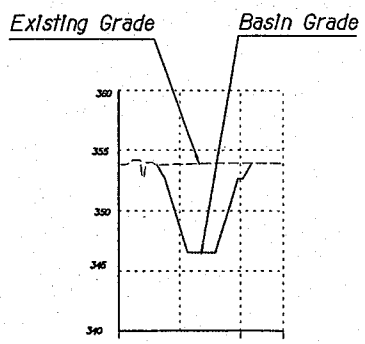

SECTION 5 - 5

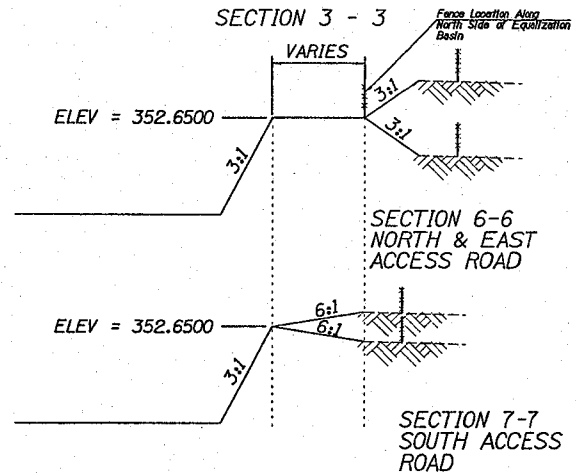

SCALE: H = 1:200
V = 1:20

	NAME	DATE	ARIZONA DEPARTMENT OF TRANSPORTATION INTERMODAL TRANSPORTATION DIVISION AND FLOOD CONTROL DISTRICT OF MARICOPA COUNTY
DESIGN	KJ, BB	3-97	
DRAWN	DW	3-97	
CHECKED	JZ	3-97	
HDR Engineering, Inc.			SECTIONS
ROUTE	LOCATION		PHASE I BASIN GRADING PROJECT
CONTRACT NO. FCD 97-02			DWG. NO. G-1.7. 8 OF 10

VIEW NAME: ooooSYSTIMEoooooooooooDGNoSPECIFICATIONoooooo

REF FILE NAMES: [illegible]
FILE: d:\[illegible]
DATE: 29-Nov-97 15:42

DATE	LOCATION	REVISION	PROJECT NO.	PROJECT NO.

Metric

F.H.W.A. REGION	STATE	PROJECT NO.	SHEET NO.	TOTAL SHEETS	AS BUILT
9	ARIZ.	RAM 600-7-501	9	10	
		TRACS H431401C			

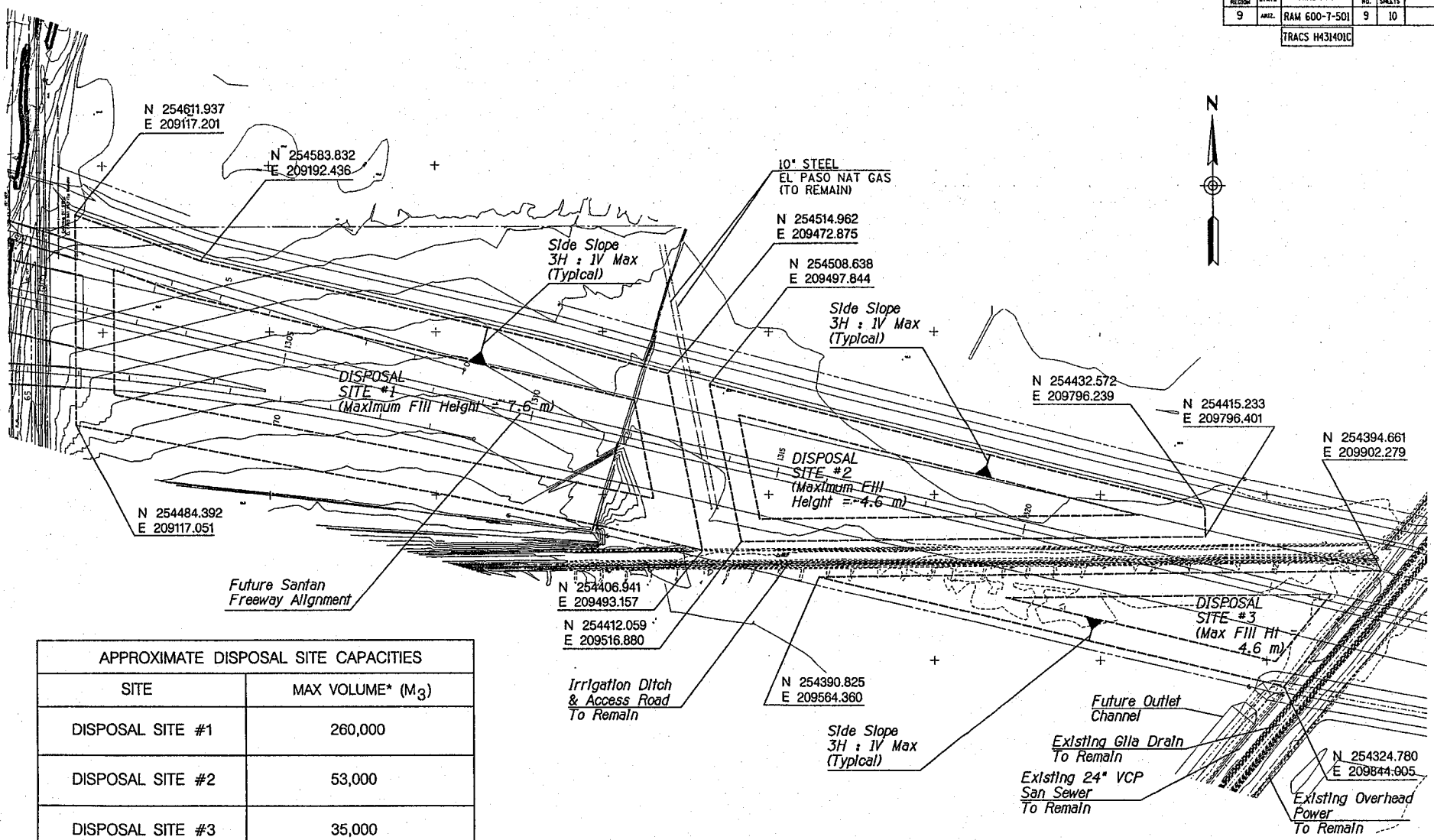

APPROXIMATE DISPOSAL SITE CAPACITIES	
SITE	MAX VOLUME* (M_3)
DISPOSAL SITE #1	260,000
DISPOSAL SITE #2	53,000
DISPOSAL SITE #3	35,000
* UNADJUSTED FOR SHRINKAGE OR SITE ACCESS AND EGRESS	

	NAME	DATE	
DESIGN	K.J. BB	3-97	ARIZONA DEPARTMENT OF TRANSPORTATION INTERMODAL TRANSPORTATION DIVISION AND FLOOD CONTROL DISTRICT OF MARICOPA COUNTY
DRAWN	DW	3-97	
CHECKED	JZ	3-97	

HDR Engineering, Inc.

DISPOSAL SITE PLAN

ROUTE | LOCATION: PHASE I BASIN GRADING PROJECT

DWG. NO. G- 1.8

CONTRACT NO. FCD 97-02

9 OF 10

Metric

F.H.W.A. REGION	STATE	PROJECT NO.	SHEET NO.	TOTAL SHEETS	AS BUILT
9	ARIZ.	RAM 600-7-501	10	10	
		TRACS H431401C			

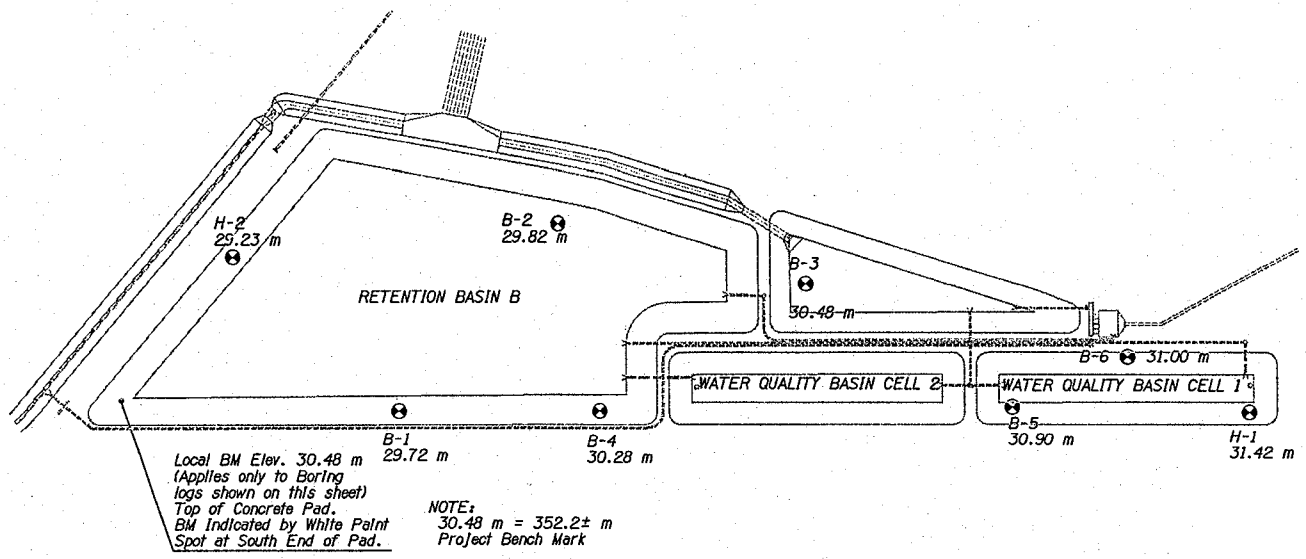

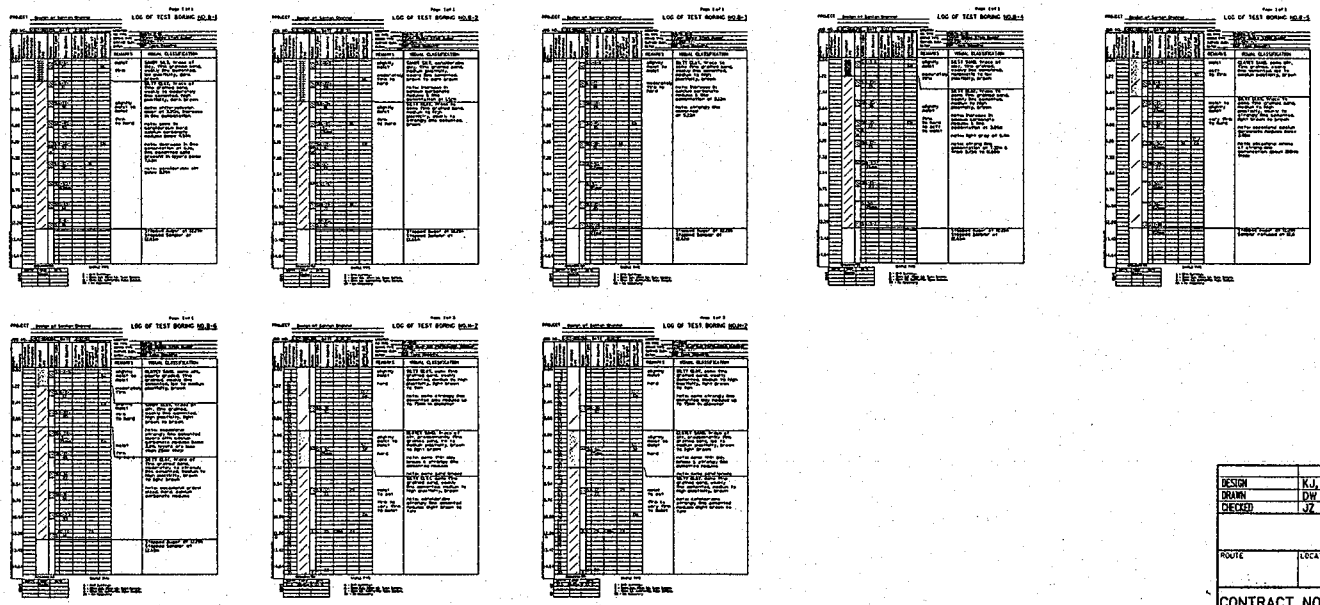

	NAME	DATE	ARIZONA DEPARTMENT OF TRANSPORTATION INTERMODAL TRANSPORTATION DIVISION AND FLOOD CONTROL DISTRICT OF MARICOPA COUNTY
DESIGN	KJ, BB	3-97	
DRAWN	DW	3-97	
CHECKED	JZ	3-97	

BORING PLAN

ROUTE | LOCATION: PHASE I BASIN GRADING PROJECT | DWG. NO. B-1.1.

CONTRACT NO FCD 97-02 | 10 OF 10

VIEW NAME: SYSTIME SPECIFICATION

REF FILE NAMES: chrom1.dgn, dem.dgn
FILE: d:\martin\subar02.dgn
DATE: 28-Mar-97 15:19

Metric

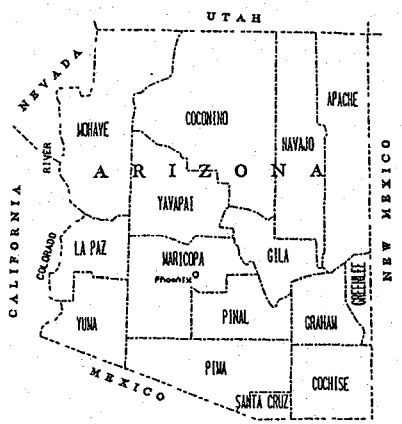

STATE OF ARIZONA
DEPARTMENT OF TRANSPORTATION
INTERMODAL TRANSPORTATION DIVISION

FLOOD CONTROL DISTRICT OF MARICOPA COUNTY

GILA RIVER INDIAN COMMUNITY

PHASE 2 SANTAN CHANNEL PROJECT

OUTFALL CHANNEL
AND
P-MIP PIPELINES (2)
CONTRACT NO. FCD 97-30
PCN 490012

ADOT PROJECT 600-7-502
TRACS H4314 02 C

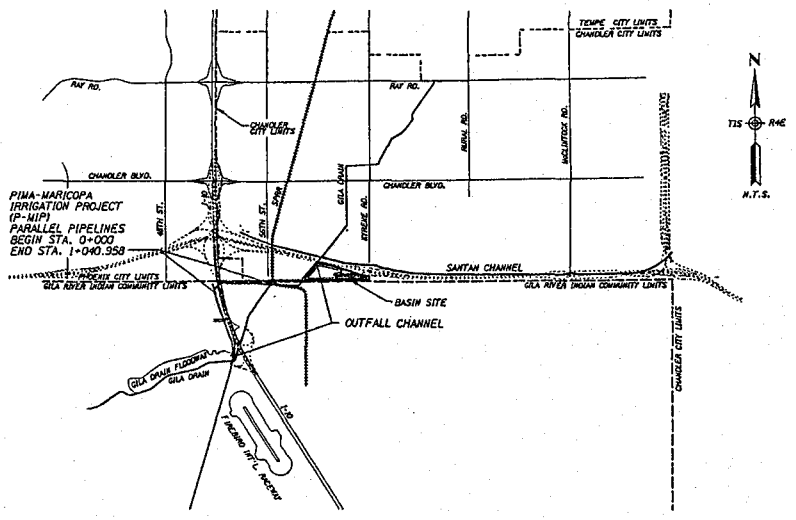

PIMA-MARICOPA IRRIGATION PROJECT
P.O. BOX E
SACATON, AZ 85247
(602)899-0092 PHX
(520)562-3301 LOCAL
(520)562-4008 FAX

GILA RIVER INDIAN COMMUNITY 1939 ARIZONA

E. LEE THOMPSON — DATE
DIRECTOR, LAND AND WATER RESOURCES

LARRY SINCLAIR — DATE
P-MIP PROJECT MANAGER

FLOOD CONTROL DISTRICT OF MARICOPA COUNTY

ISSUED FOR PUBLIC BIDDING BY:

CHIEF ENGINEER AND GENERAL MANAGER — DATE

BOARD OF DIRECTORS OF THE FLOOD CONTROL DISTRICT

JAN BREWER - CHAIRMAN

DISTRICT 1 FULTON BROCK
DISTRICT 2 DON T. STAPLEY
DISTRICT 3 ANDY KUNASEK
DISTRICT 4 JAN BREWER
DISTRICT 5 MARY ROSE GARRIDO WILCOX

ARIZONA DEPARTMENT OF TRANSPORTATION
INTERMODAL TRANSPORTATION DIVISION
APPROVED: THOMAS G. LOWITY
STATE ENGINEER

APPROVED — DATE

ASSISTANT STATE ENGINEER

FILE: C:\SANTAN\99\SH12CVR.DGN
DATE: 03-Feb-98 10:43

F.H.W.A. REGION	STATE	PROJECT NO.	SHEET NO.	TOTAL SHEETS	AS BUILT
9	ARIZ.	600-7-502	1	119	
		202L MA 050			

INDEX OF SHEETS

SHEET NO.	DRAWING NO.	DESCRIPTION
		GENERAL
		TITLE SHEET
1	G-2.0	INDEX
2	G-2.1	DESIGN SHEET
3	G-2.2	NEW PIPE SUMMARY DETENTION BASIN B
4	G-2.3	LOW HEAD PIPE SUMMARY PIMA-MARICOPA IRRIGATION PROJECT
5	G-2.4	HIGH HEAD PIPE SUMMARY PIMA-MARICOPA IRRIGATION PROJECT
6	G-2.5	NEW PIPE SUMMARY BROADACRES IRRIGATON PIPE EXTENSION
7	G-2.6	NEW CORRUGATED STEEL PIPE EXTENSIONS SUMMARY SHEET
8	G-2.7	CONCRETE BOX CULVERT AND BOX CULVERT EXTENSION SUMMARY SHEET
9-17	G-3.1 to G-3.9	RIGHT OF WAY PLANS SANTAN OUTFALL CHANNEL
18-23	G-4.1 to G-4.6	RIGHT OF WAY PLANS PIMA-MARICOPA IRRIGATION PROJECT
24-28	G-5.1 to G-5.5	SOIL BORING LOGS SANTAN OUTFALL CHANNEL
29	G-5.6	SOIL BORING LOG PIMA-MARICOPA IRRIGATION PROJECT
		CIVIL
30-33	C-1.1 to C-1.4	SANTAN OUTFALL CHANNEL GEOMETRIC LAYOUT
34	C-1.5	P-MIP GEOMETRIC LAYOUT
35-43	C-2.1 to C-2.9	EXISTING CONDITIONS & REMOVALS
44	C-3.1	56TH ST & I-10 DETOUR TYPICAL SECTIONS
45	C-4.1	56th STREET DETOUR PLAN/PROFILE
46-48	C-5.1 to C-5.3	I-10 WESTBOUND DETOUR ROAD PLAN AND PROFILE
49-51	C-6.1 to C-6.3	I-10 EASTBOUND DETOUR ROAD PLAN AND PROFILE
		DRAINAGE
52-61	D-1.1 to D-1.10	SANTAN OUTFALL CHANNEL PLAN/PROFILE
62-74	D-1.11 to D-1.23	SANTAN OUTFALL CHANNEL SECTIONS AND DETAILS
		P-MIP PIPELINES
75-78	P-1.1 to P-1.4	P-MIP LOW HEAD PIPELINE PLAN/PROFILE
79-82	P-1.5 to P-1.8	P-MIP HIGH HEAD PIPELINE PLAN/PROFILE
83-86	P-1.9 to P-1.12	P-MIP DETAILS
		TRAFFIC PLANS
87	T-1.1	GENERAL NOTES/TRAFFIC CONTROL/CONSTRUCTION SEQUENCE
88	T-1.2	ADOT TRAFFIC CONTROL STANDARD SPECIFICATIONS LIST
89	T-1.3	I-10 ADVANCED SIGNING TRAFFIC CONTROL
90-91	T-1.4 to T-1.5	I-10 EB DETOUR WB-SHIFT TRAFFIC CONTROL
92-93	T-1.6 to T-1.7	I-10 WB DETOUR EB-SHIFT TRAFFIC CONTROL
94-95	T-1.8 to T-1.9	56TH ST DETOUR TRAFFIC CONTROL
		BASIN PIPING
96	B-1.1	DETENTION BASIN B PIPING PLAN
97-98	B-1.2 to B-1.3	DETENTION BASIN B PIPING PROFILES
99-103	B-1.4 to B-1.8	DETENTION BASIN B PIPING DETAILS
		UTILITIES
104-109	U-1.1 to U-1.6	CITY OF CHANDLER SANITARY SEWER
110-119	1 to 10	SALT RIVER PROJECT LATERAL 2.6 & 2.7 TAILWATER DRAIN

	NAME	DATE
DESIGN	JJZ	4-98
DRAWN	DRS	4-98
CHECKED	JJZ	4-98

HDR Engineering, Inc.

ARIZONA DEPARTMENT OF TRANSPORTATION
INTERMODAL TRANSPORTATION DIVISION
AND
FLOOD CONTROL DISTRICT OF MARICOPA COUNTY

INDEX

ROUTE 202L

LOCATION SANTAN OUTFALL CHANNEL AND P-MIP PIPELINES

DWG. NO. G-2.0

TRACS NO. H4314 02 C

600-7-502

___ OF ___

VIEW NAME: eeeeeSYSTIMEeeeeeeeeeeDGNeSPECIFICATIONeeeee

SHEET NO.	FINISHED PLANS	REVISIONS	LOCATION	DATE

FILE: pr\santan\95%\sa12ds05.dgn
DATE: 08-Dec-97 10:32

F.A.H.A. REGION	STATE	PROJECT NO.	SHEET NO.	TOTAL SHEETS	AS BUILT
9	ARIZ.	600-7-502	52	119	
		202L MA 050			

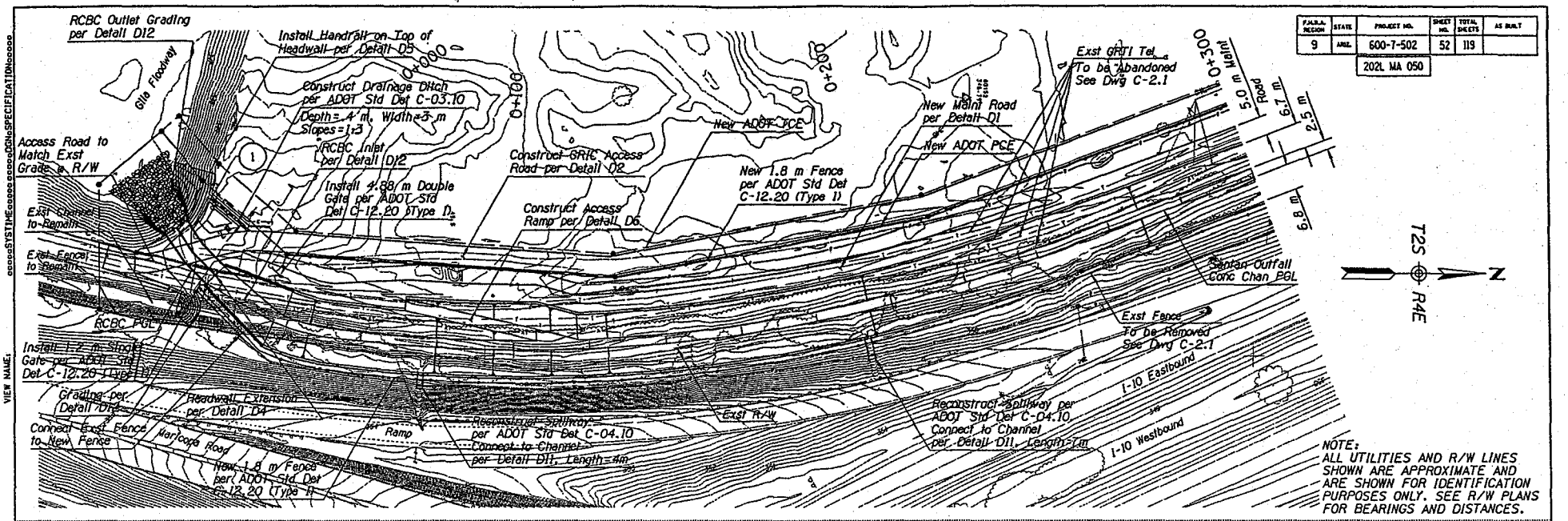

NOTE:
ALL UTILITIES AND R/W LINES SHOWN ARE APPROXIMATE AND ARE SHOWN FOR IDENTIFICATION PURPOSES ONLY. SEE R/W PLANS FOR BEARINGS AND DISTANCES.

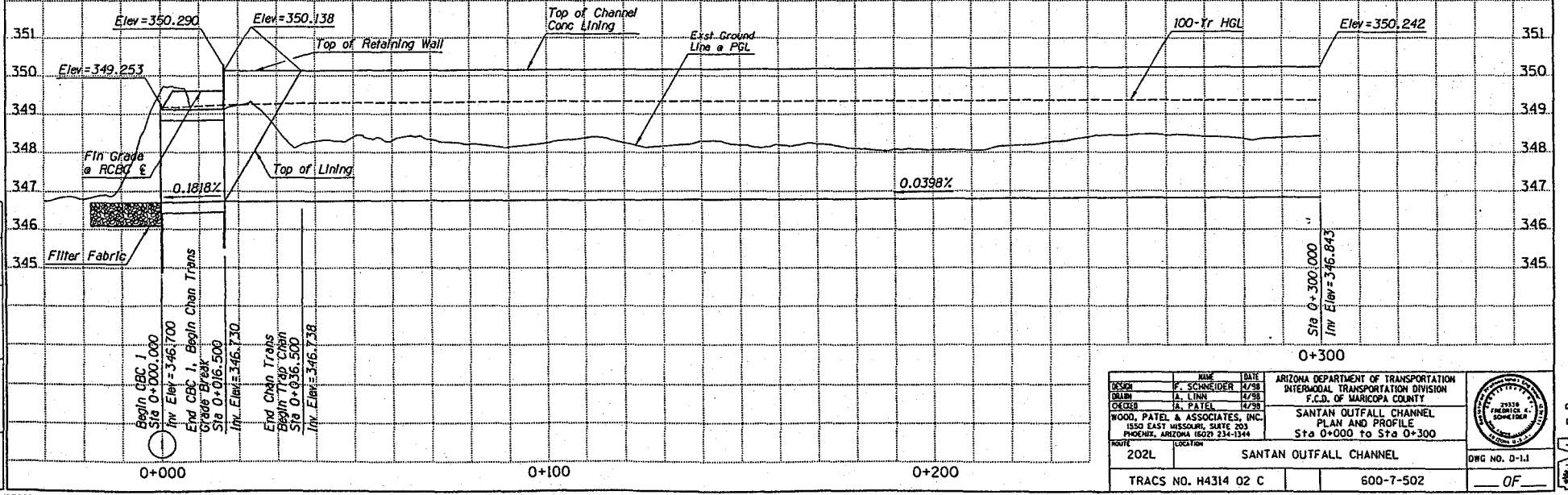

	NAME	DATE
DESIGN	F. SCHNEIDER	4/98
DRAWN	A. LINN	4/98
CHECKED	A. PATEL	4/98

WOOD, PATEL & ASSOCIATES, INC.
1550 EAST MISSOURI, SUITE 203
PHOENIX, ARIZONA (602) 234-1344

ARIZONA DEPARTMENT OF TRANSPORTATION
INTERMODAL TRANSPORTATION DIVISION
F.C.D. OF MARICOPA COUNTY

SANTAN OUTFALL CHANNEL
PLAN AND PROFILE
Sta 0+000 to Sta 0+300

ROUTE: 202L
LOCATION: SANTAN OUTFALL CHANNEL

TRACS NO. H4314 02 C

600-7-502

DWG NO. D-1.1

___ OF ___

FILE: v:/970604/ 100sub/ppl.dgn
DATE: 11/26/97

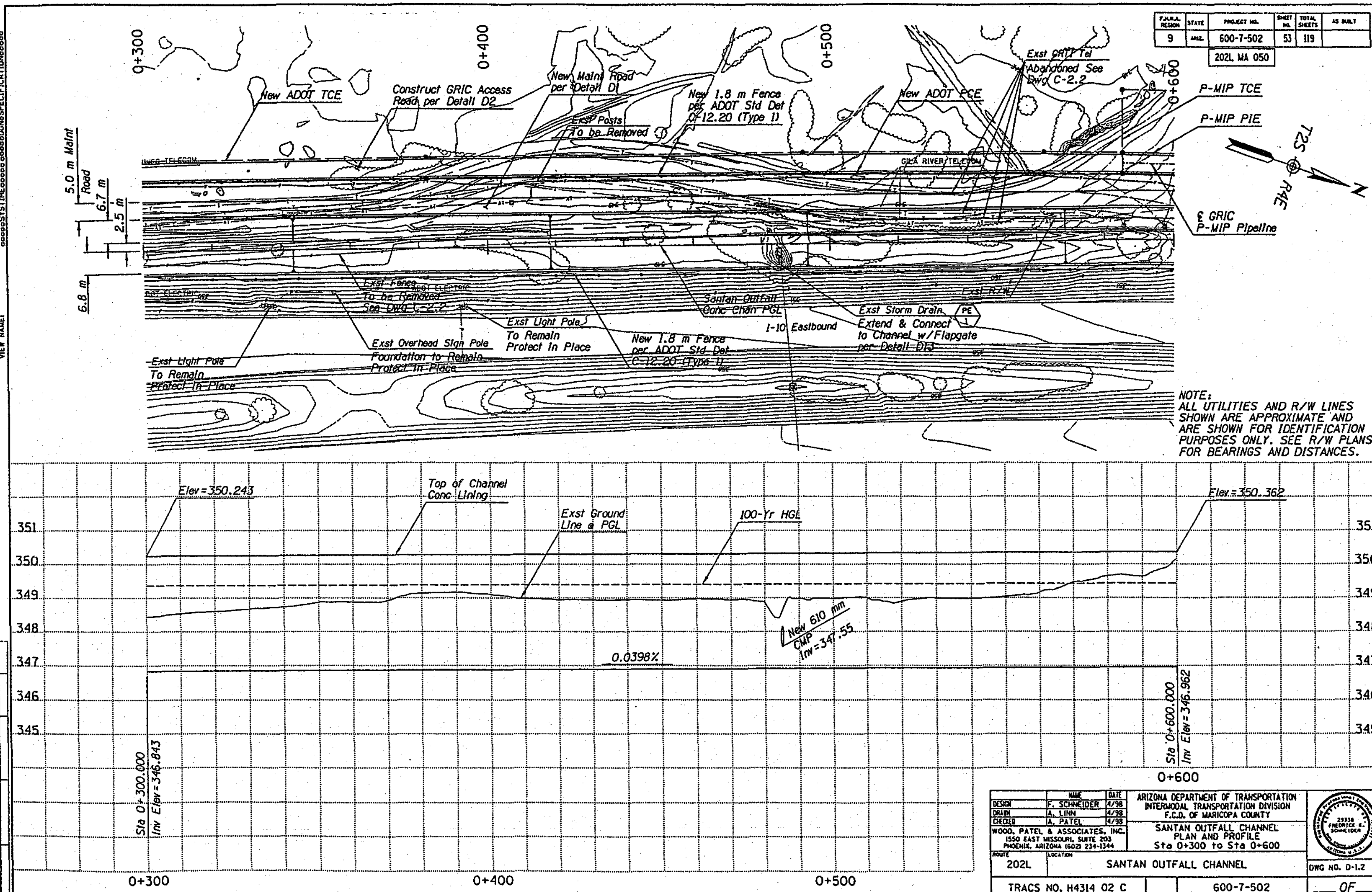

FILE: v:/970604/100sub/pp2.dgn
DATE: 11/18/97

F.H.W.A. REGION	STATE	PROJECT NO.	SHEET NO.	TOTAL SHEETS	AS BUILT
9	ARIZ.	600-7-502	54	119	
		202L MA 050			

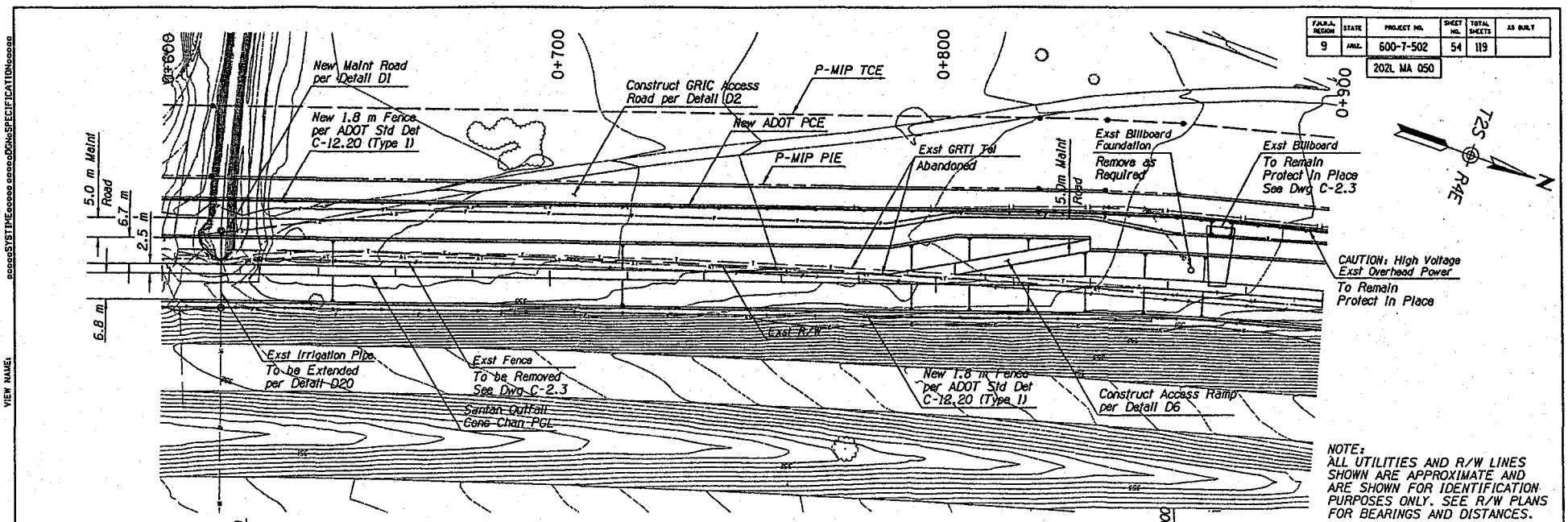

NOTE:
ALL UTILITIES AND R/W LINES SHOWN ARE APPROXIMATE AND ARE SHOWN FOR IDENTIFICATION PURPOSES ONLY. SEE R/W PLANS FOR BEARINGS AND DISTANCES.

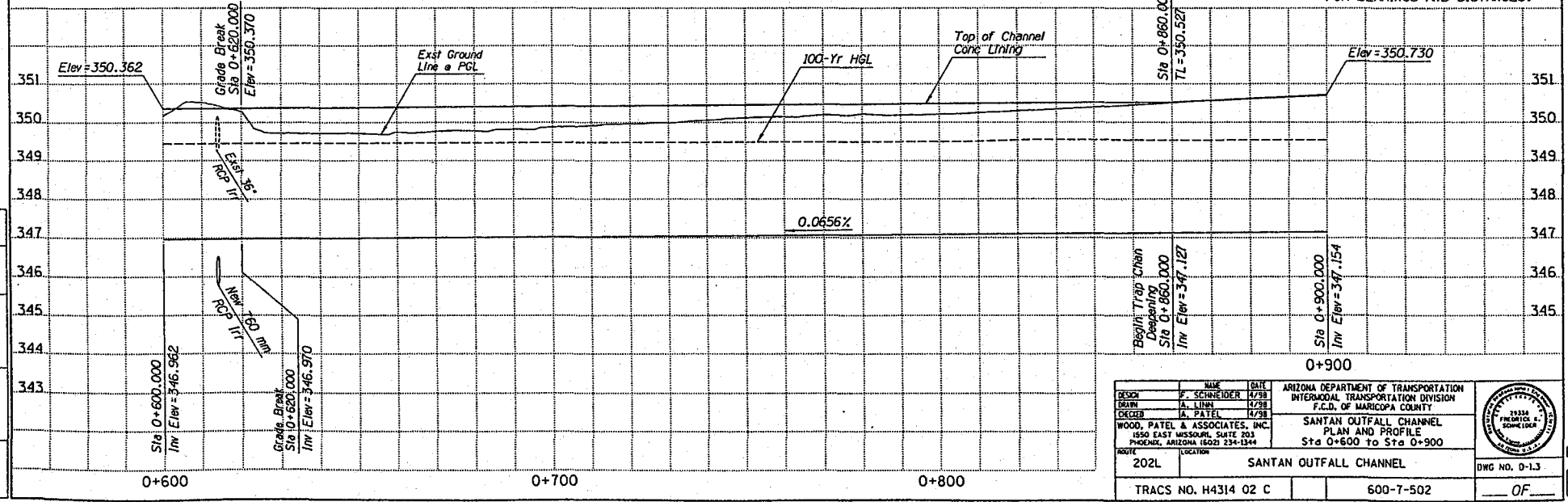

	NAME	DATE
DESIGN	F. SCHNEIDER	4/98
DRAWN	A. LINN	4/98
CHECKED	A. PATEL	4/98

WOOD, PATEL & ASSOCIATES, INC.
1550 EAST MISSOURI, SUITE 203
PHOENIX, ARIZONA (602) 234-1344

ARIZONA DEPARTMENT OF TRANSPORTATION
INTERMODAL TRANSPORTATION DIVISION
F.C.D. OF MARICOPA COUNTY

SANTAN OUTFALL CHANNEL
PLAN AND PROFILE
Sta 0+600 to Sta 0+900

ROUTE: 202L
LOCATION: SANTAN OUTFALL CHANNEL

DWG NO. D-1.3

TRACS NO. H4314 02 C | 600-7-502 | ___ OF ___

FILE: v:/970604/100sub/pp3.dgn
DATE: 11/26/97

Metric

F.H.W.A. REGION	STATE	PROJECT NO.	SHEET NO.	TOTAL SHEETS	AS BUILT
9	ARIZ.	600-7-502	55	119	
		202L MA 050			

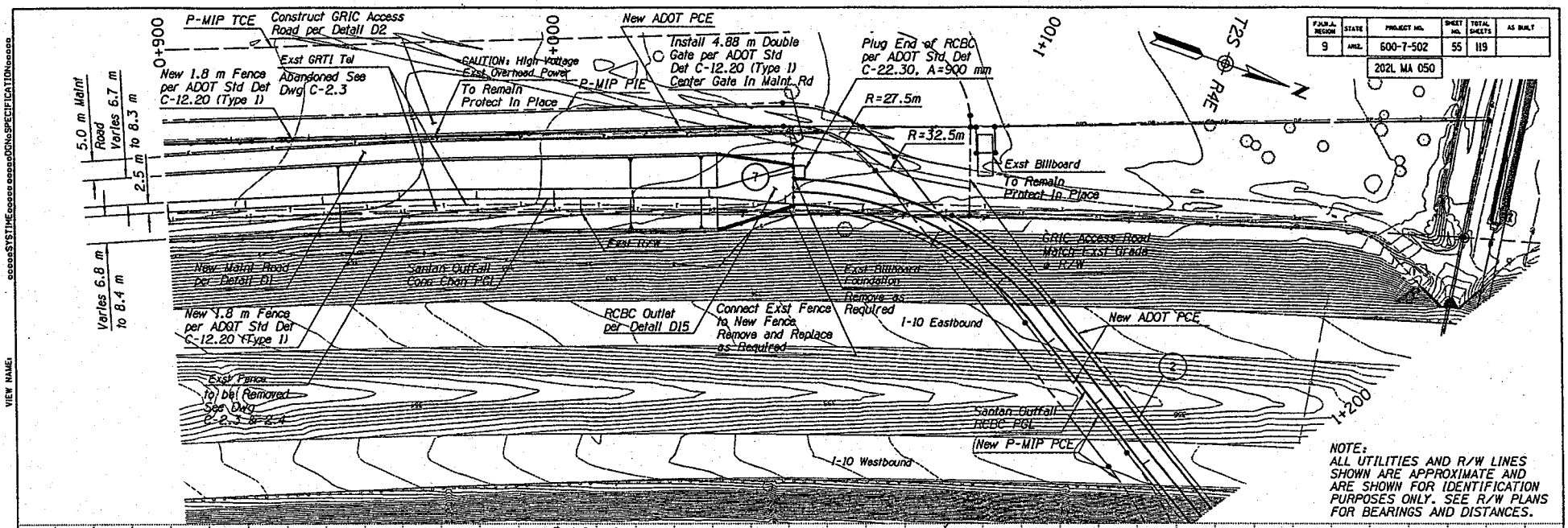

NOTE:
ALL UTILITIES AND R/W LINES SHOWN ARE APPROXIMATE AND ARE SHOWN FOR IDENTIFICATION PURPOSES ONLY. SEE R/W PLANS FOR BEARINGS AND DISTANCES.

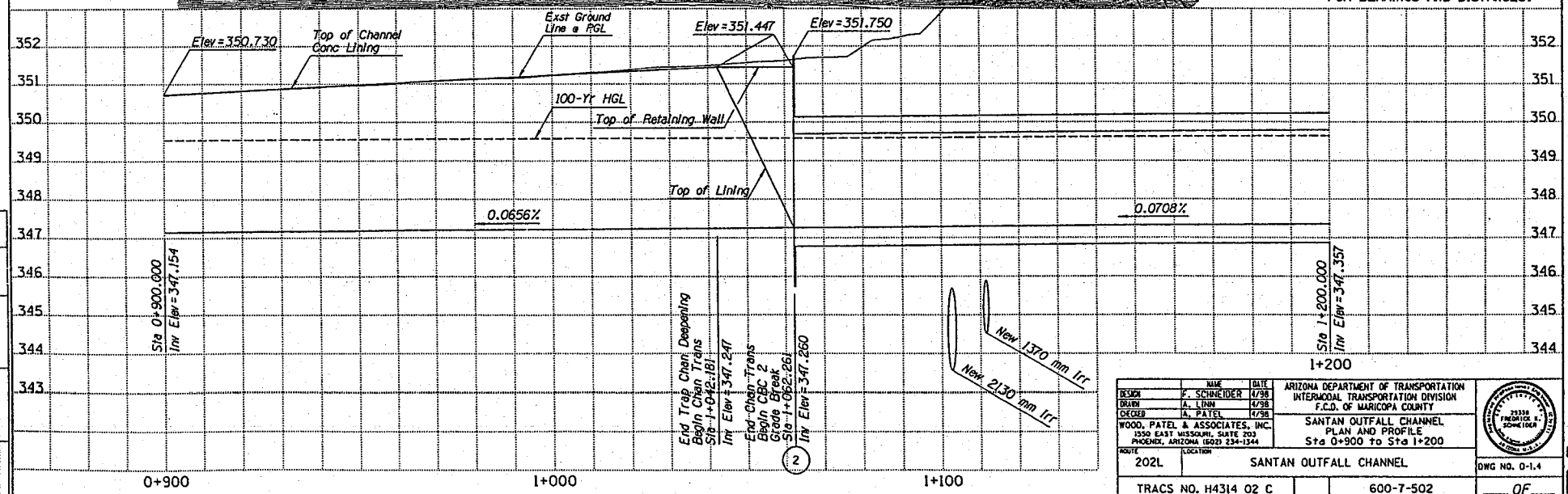

	NAME	DATE
DESIGN	F. SCHNEIDER	4/98
DRAWN	A. LINN	4/98
CHECKED	A. PATEL	4/98

WOOD, PATEL & ASSOCIATES, INC.
1550 EAST MISSOURI, SUITE 203
PHOENIX, ARIZONA (602) 234-1344

ARIZONA DEPARTMENT OF TRANSPORTATION
INTERMODAL TRANSPORTATION DIVISION
F.C.D. OF MARICOPA COUNTY

SANTAN OUTFALL CHANNEL
PLAN AND PROFILE
Sta 0+900 to Sta 1+200

29339 FREDRICK R. SCHNEIDER ARIZONA U.S.A.

ROUTE: 202L
LOCATION: SANTAN OUTFALL CHANNEL

DWG NO. 0-1.4

TRACS NO. H4314 02 C | 600-7-502 | ___ OF ___

VIEW NAME:

SURVEY NO.	FIELD PLAN	REVISIONS	LOCATION	DATE

FILE: v:/970604/100sub/pp4.dgn
DATE: 11/18/97

Metric

F.H.W.A. REGION	STATE	PROJECT NO.	SHEET NO.	TOTAL SHEETS	AS BUILT
9	ARIZ.	600-7-502	56	119	
		202L MA 050			

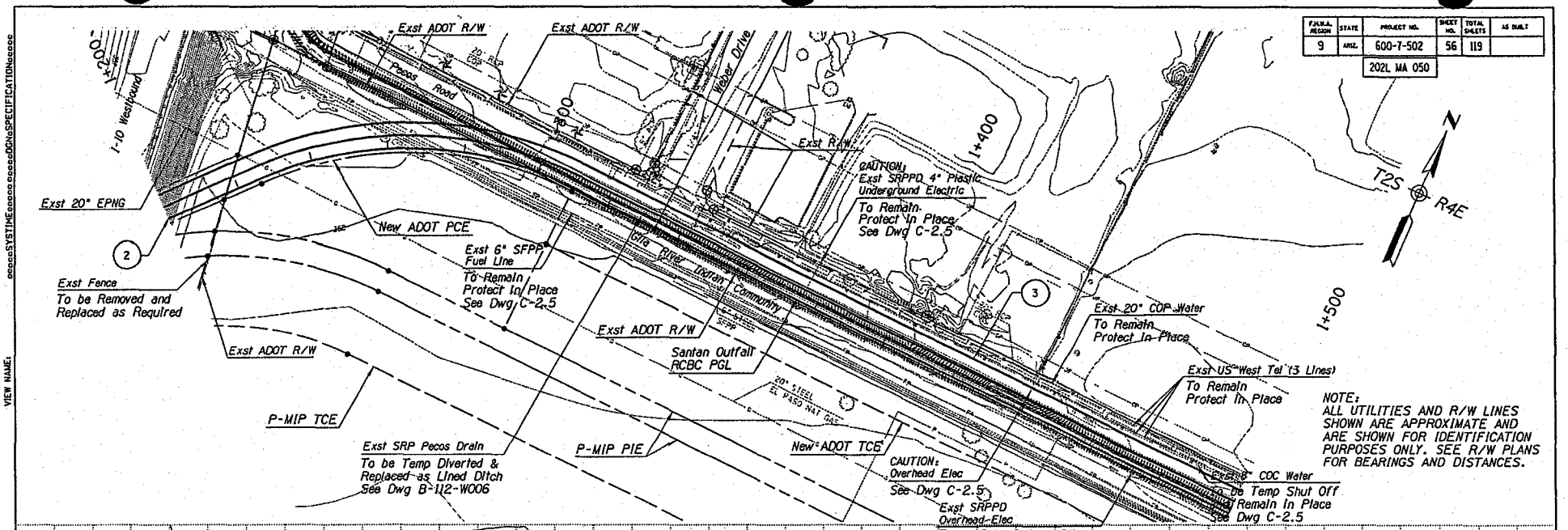

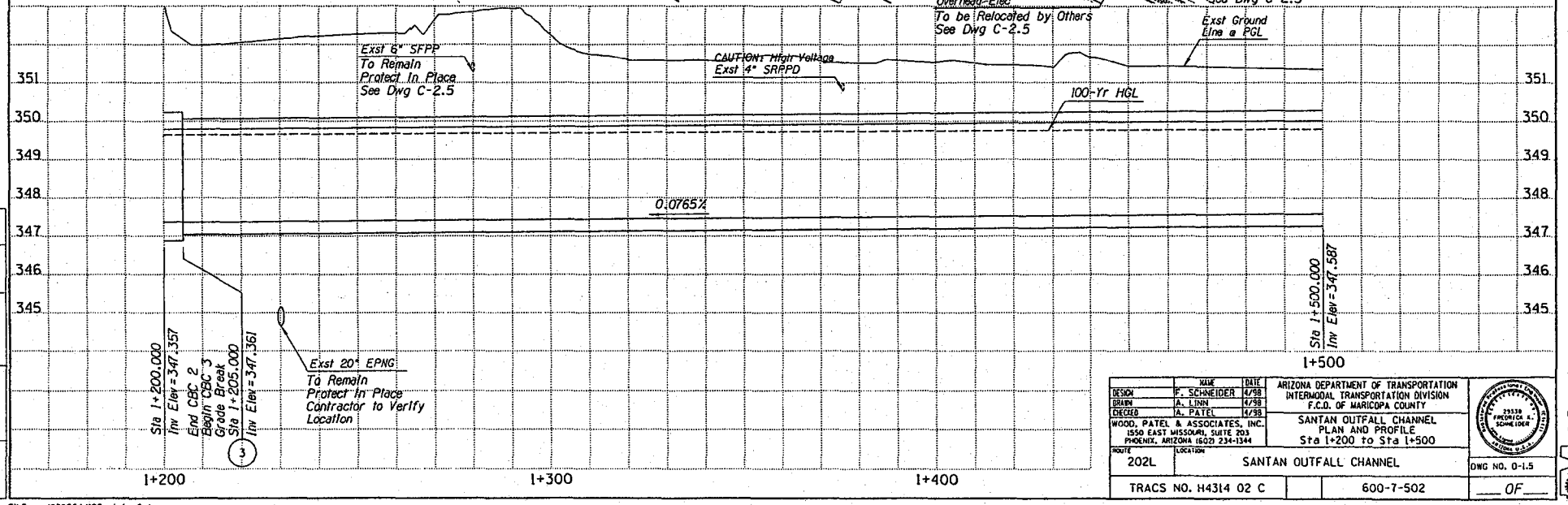

	NAME	DATE
DESIGN	F. SCHNEIDER	4/98
DRAWN	A. LINN	4/98
CHECKED	A. PATEL	4/98

WOOD, PATEL & ASSOCIATES, INC.
1550 EAST MISSOURI, SUITE 203
PHOENIX, ARIZONA (602) 234-1344

ARIZONA DEPARTMENT OF TRANSPORTATION
INTERMODAL TRANSPORTATION DIVISION
F.C.D. OF MARICOPA COUNTY

SANTAN OUTFALL CHANNEL
PLAN AND PROFILE
Sta 1+200 to Sta 1+500

ROUTE: 202L
LOCATION: SANTAN OUTFALL CHANNEL

TRACS NO. H4314 02 C | 600-7-502

DWG NO. 0-1.5

___ OF ___

FILE: v:/970604/100sub/pp5.dgn
DATE: 11/18/97

VIEW NAME:

SURVEY NO.	FINISH PLANS	REVISIONS	LOCATION	DATE

F.A.H.A. REGION	STATE	PROJECT NO.	SHEET NO.	TOTAL SHEETS	AS BUILT
9	ARIZ.	600-7-502	57	119	
		202L MA 050			

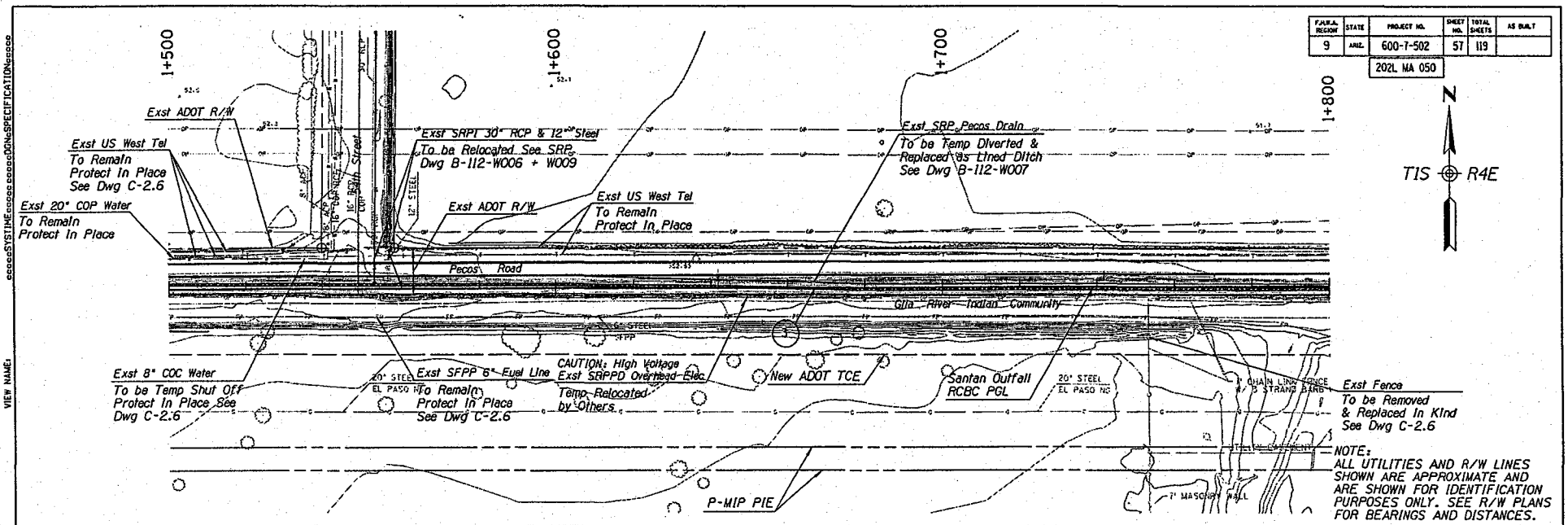

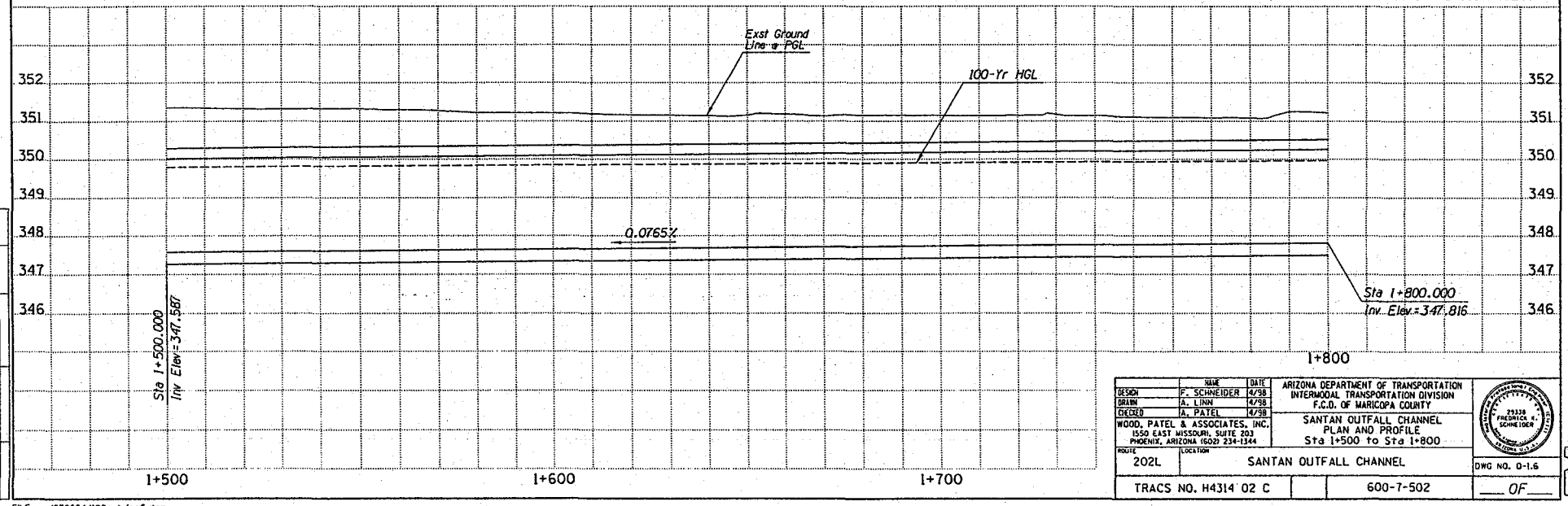

	NAME	DATE
DESIGN	F. SCHNEIDER	4/98
DRAWN	A. LINN	4/98
CHECKED	A. PATEL	4/98

WOOD, PATEL & ASSOCIATES, INC.
1550 EAST MISSOURI, SUITE 203
PHOENIX, ARIZONA (602) 234-1344

ARIZONA DEPARTMENT OF TRANSPORTATION
INTERMODAL TRANSPORTATION DIVISION
F.C.D. OF MARICOPA COUNTY

SANTAN OUTFALL CHANNEL
PLAN AND PROFILE
Sta 1+500 to Sta 1+800

ROUTE: 202L
LOCATION: SANTAN OUTFALL CHANNEL

DWG NO. 0-1.6

TRACS NO. H4314 02 C | 600-7-502 | ___ OF ___

FILE: v:/970604/100sub/pp6.dgn
DATE: 11/26/97

F.H.W.A. REGION	STATE	PROJECT NO.	SHEET NO.	TOTAL SHEETS	AS BUILT
9	ARIZ.	600-7-502	58	119	
		202L MA 050			

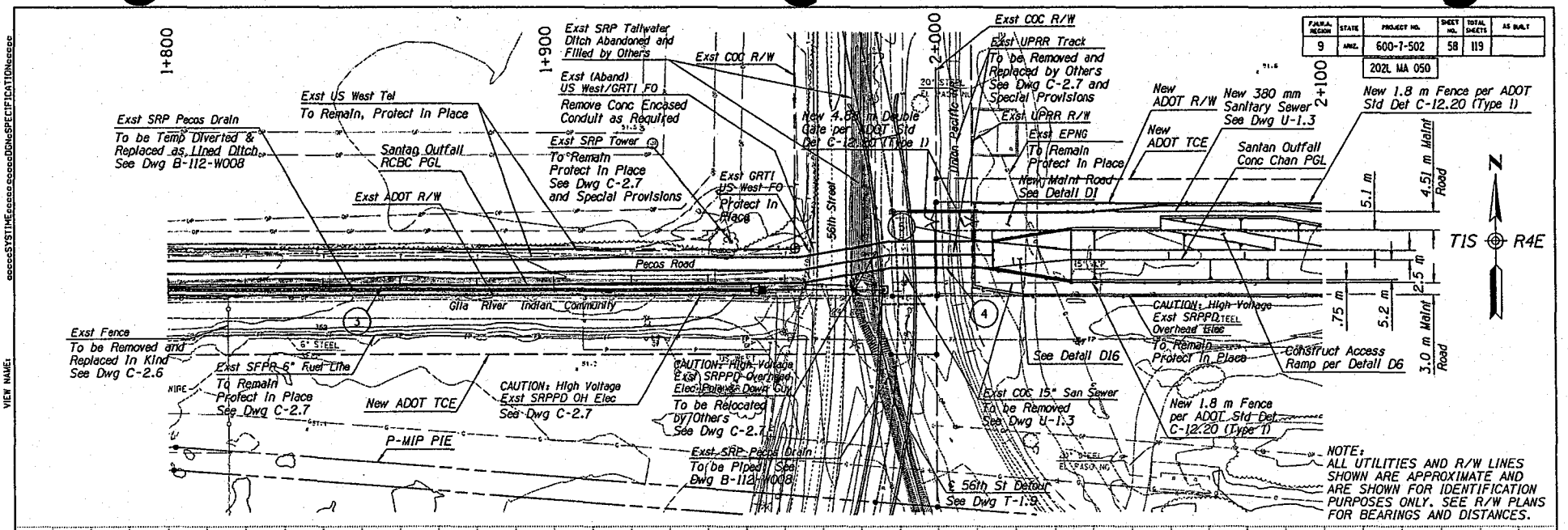

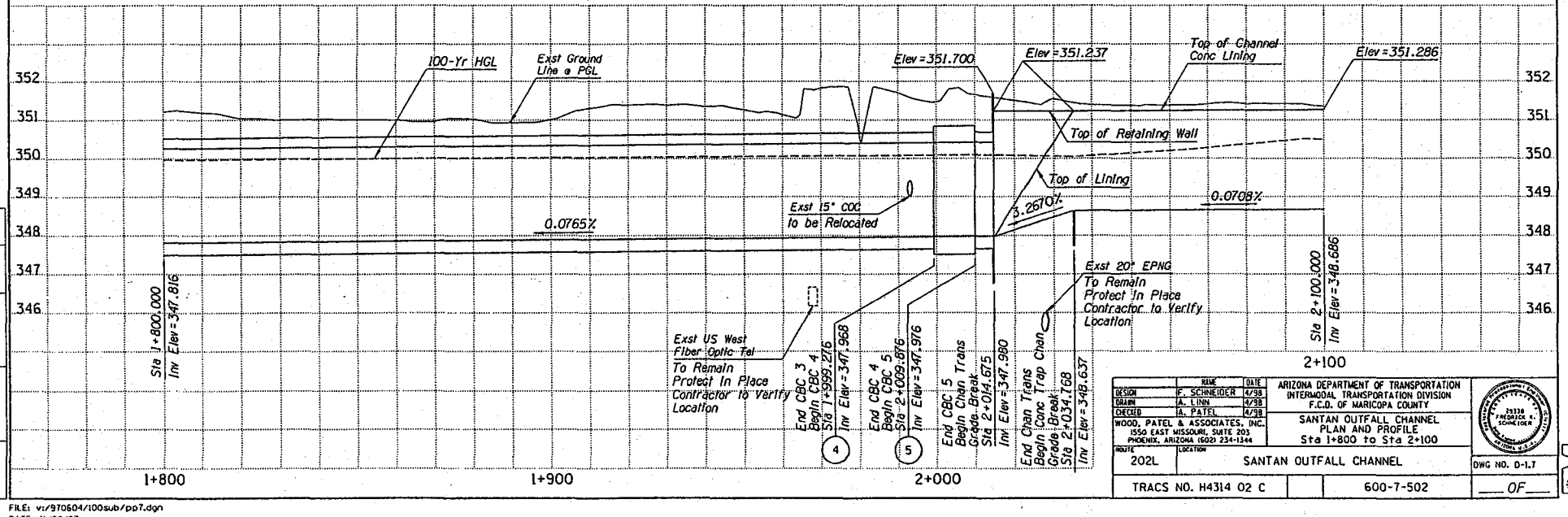

	NAME	DATE
DESIGN	F. SCHNEIDER	4/98
DRAWN	A. LINN	4/98
CHECKED	A. PATEL	4/98

WOOD, PATEL & ASSOCIATES, INC.
1550 EAST MISSOURI, SUITE 203
PHOENIX, ARIZONA (602) 234-1344

ARIZONA DEPARTMENT OF TRANSPORTATION
INTERMODAL TRANSPORTATION DIVISION
F.C.D. OF MARICOPA COUNTY

SANTAN OUTFALL CHANNEL
PLAN AND PROFILE
Sta 1+800 to Sta 2+100

ROUTE 202L | LOCATION SANTAN OUTFALL CHANNEL

DWG NO. D-1.7

TRACS NO. H4314 02 C | 600-7-502 | ___ OF ___

FILE: v:/970604/100sub/pp7.dgn
DATE: 11/26/97

F.H.W.A. REGION	STATE	PROJECT NO.	SHEET NO.	TOTAL SHEETS	AS BUILT
9	ARIZ.	600-7-502	59	119	
		202L MA 050			

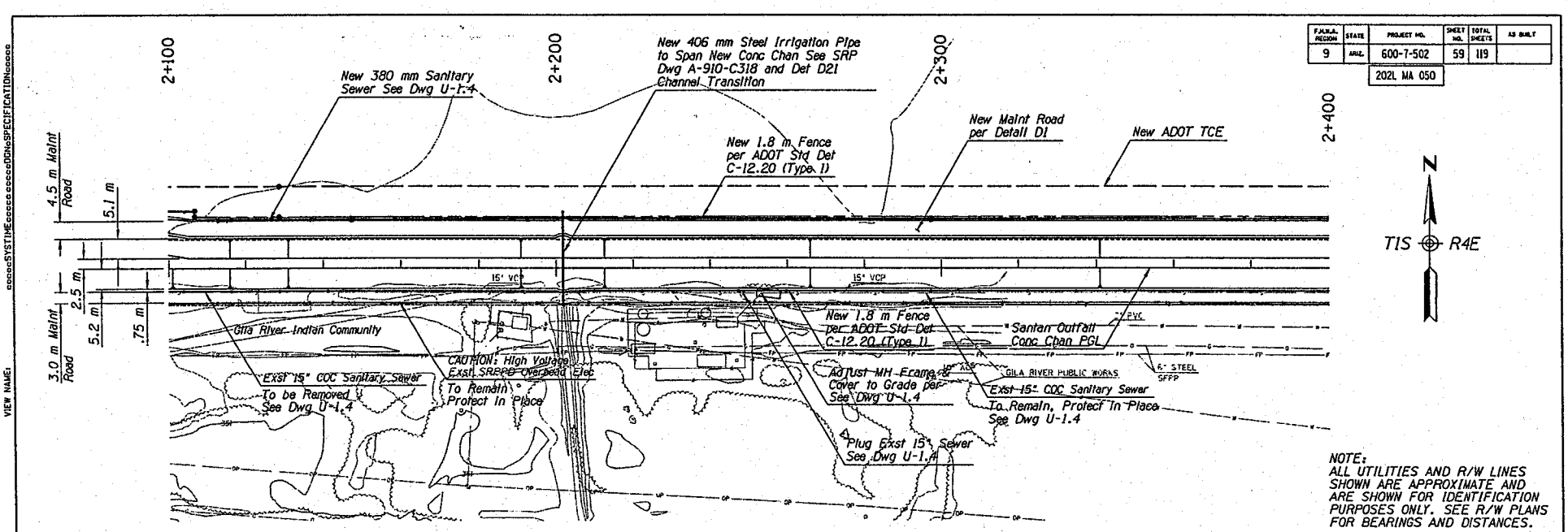

NOTE:
ALL UTILITIES AND R/W LINES SHOWN ARE APPROXIMATE AND ARE SHOWN FOR IDENTIFICATION PURPOSES ONLY. SEE R/W PLANS FOR BEARINGS AND DISTANCES.

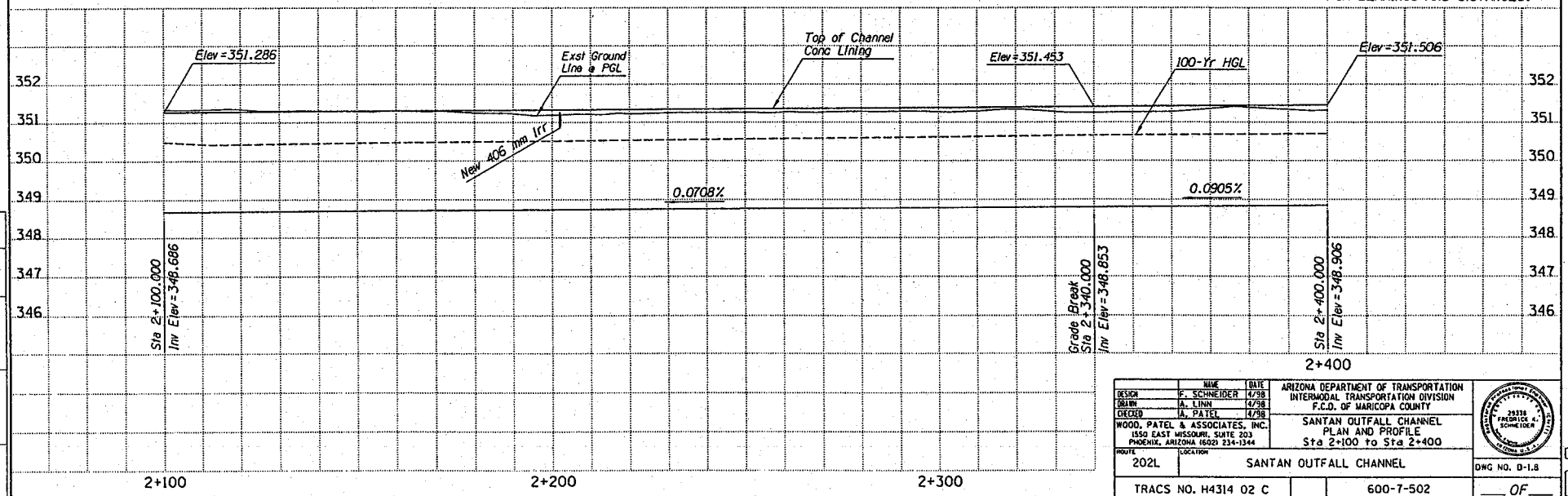

	NAME	DATE
DESIGN	F. SCHNEIDER	4/98
DRAWN	A. LINN	4/98
CHECKED	A. PATEL	4/98

WOOD, PATEL & ASSOCIATES, INC.
1550 EAST MISSOURI, SUITE 203
PHOENIX, ARIZONA 85014 234-1344

ARIZONA DEPARTMENT OF TRANSPORTATION
INTERMODAL TRANSPORTATION DIVISION
F.C.D. OF MARICOPA COUNTY

SANTAN OUTFALL CHANNEL
PLAN AND PROFILE
Sta 2+100 to Sta 2+400

ROUTE 202L | LOCATION SANTAN OUTFALL CHANNEL

TRACS NO. H4314 02 C | 600-7-502

DWG NO. D-1.8
___ OF ___

FILE: v:/970604/100sub/op8.dgn
DATE: 11/18/97

F.H.W.A. REGION	STATE	PROJECT NO.	SHEET NO.	TOTAL SHEETS	AS BUILT
9	ARIZ.	600-7-502	60	119	
		202L MA 050			

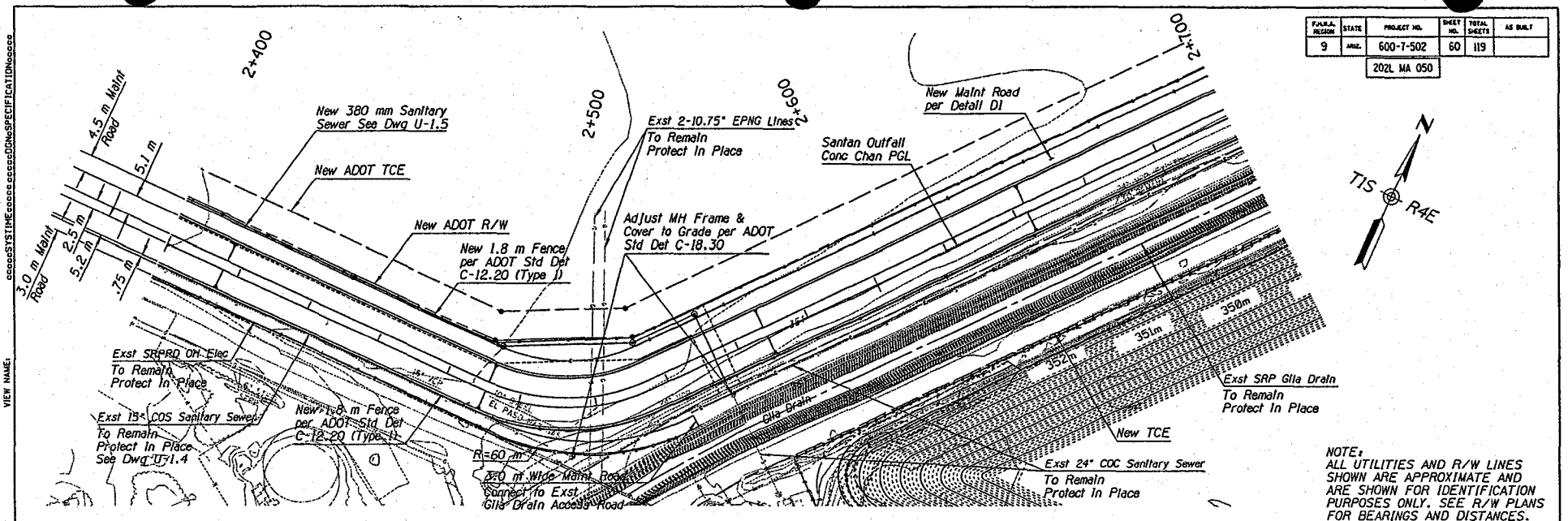

NOTE:
ALL UTILITIES AND R/W LINES SHOWN ARE APPROXIMATE AND ARE SHOWN FOR IDENTIFICATION PURPOSES ONLY. SEE R/W PLANS FOR BEARINGS AND DISTANCES.

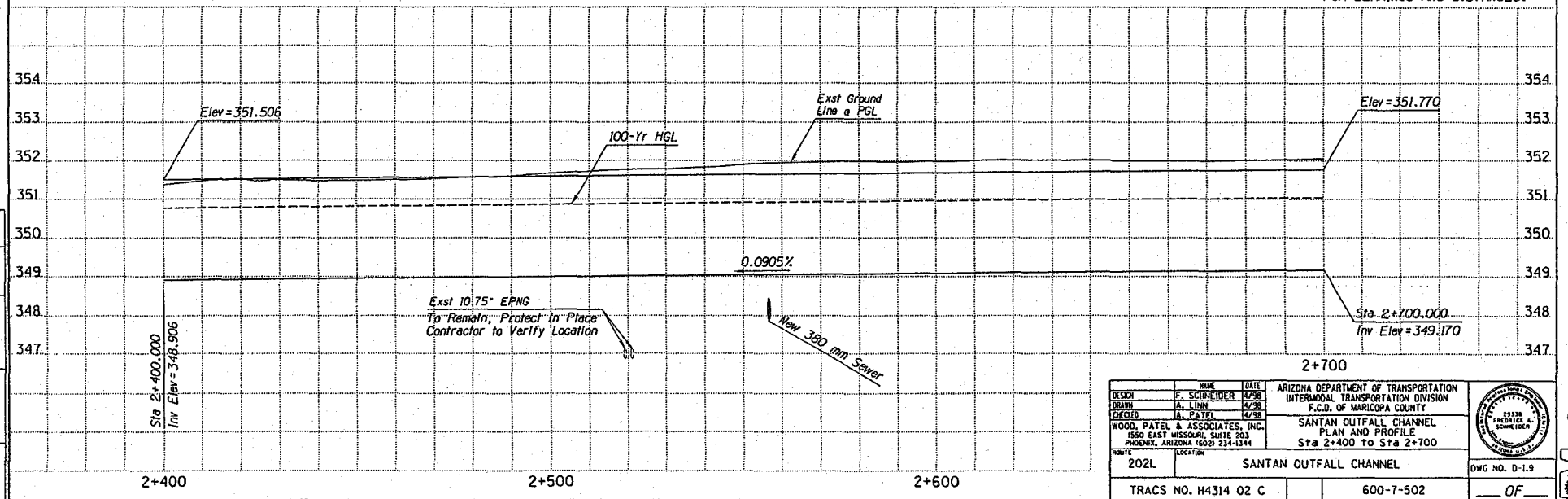

	NAME	DATE	ARIZONA DEPARTMENT OF TRANSPORTATION INTERMODAL TRANSPORTATION DIVISION F.C.D. OF MARICOPA COUNTY
DESIGN	F. SCHNEIDER	4/98	
DRAWN	A. LINN	4/98	
CHECKED	A. PATEL	4/98	
WOOD, PATEL & ASSOCIATES, INC. 1550 EAST MISSOURI, SUITE 203 PHOENIX, ARIZONA (602) 234-1344			SANTAN OUTFALL CHANNEL PLAN AND PROFILE Sta 2+400 to Sta 2+700

ROUTE 202L LOCATION SANTAN OUTFALL CHANNEL

DWG NO. D-1.9

TRACS NO. H4314 02 C | 600-7-502 | ___ OF ___

FILE: v:/970604/100sub/pp9.dgn
DATE: 11/18/97

F.H.W.A. REGION	STATE	PROJECT NO.	SHEET NO.	TOTAL SHEETS	AS BUILT
9	ARIZ.	600-7-502	61	119	
		202L MA 050			

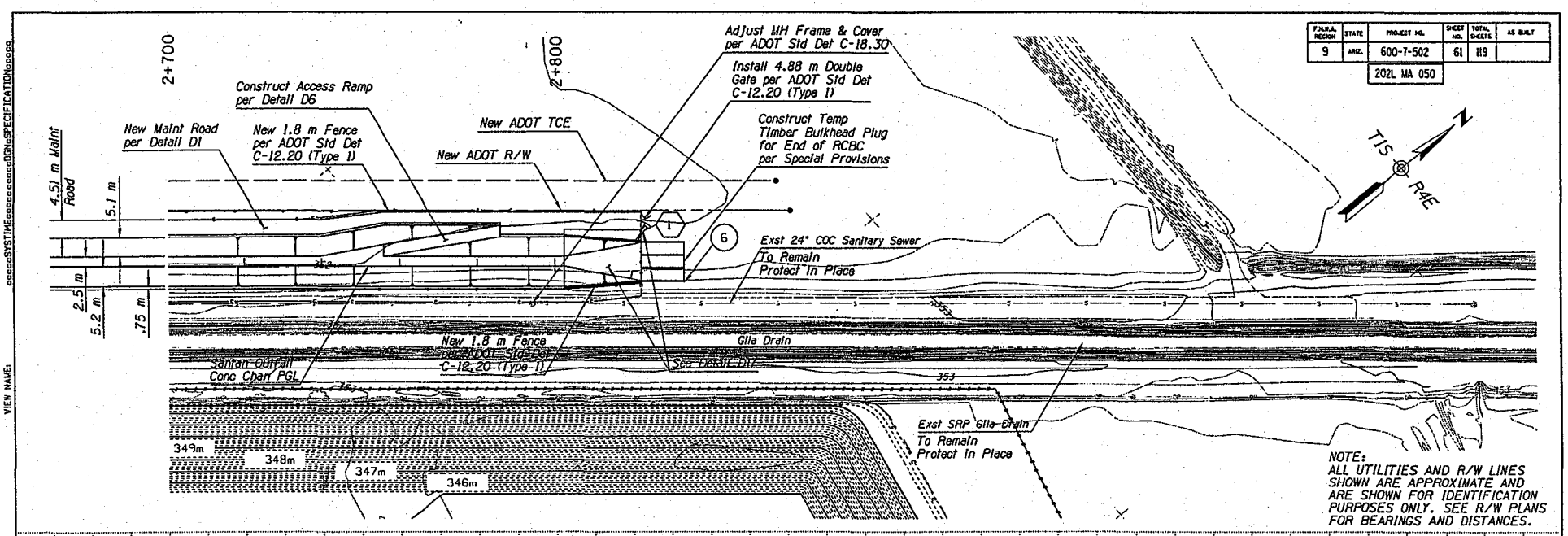

NOTE:
ALL UTILITIES AND R/W LINES SHOWN ARE APPROXIMATE AND ARE SHOWN FOR IDENTIFICATION PURPOSES ONLY. SEE R/W PLANS FOR BEARINGS AND DISTANCES.

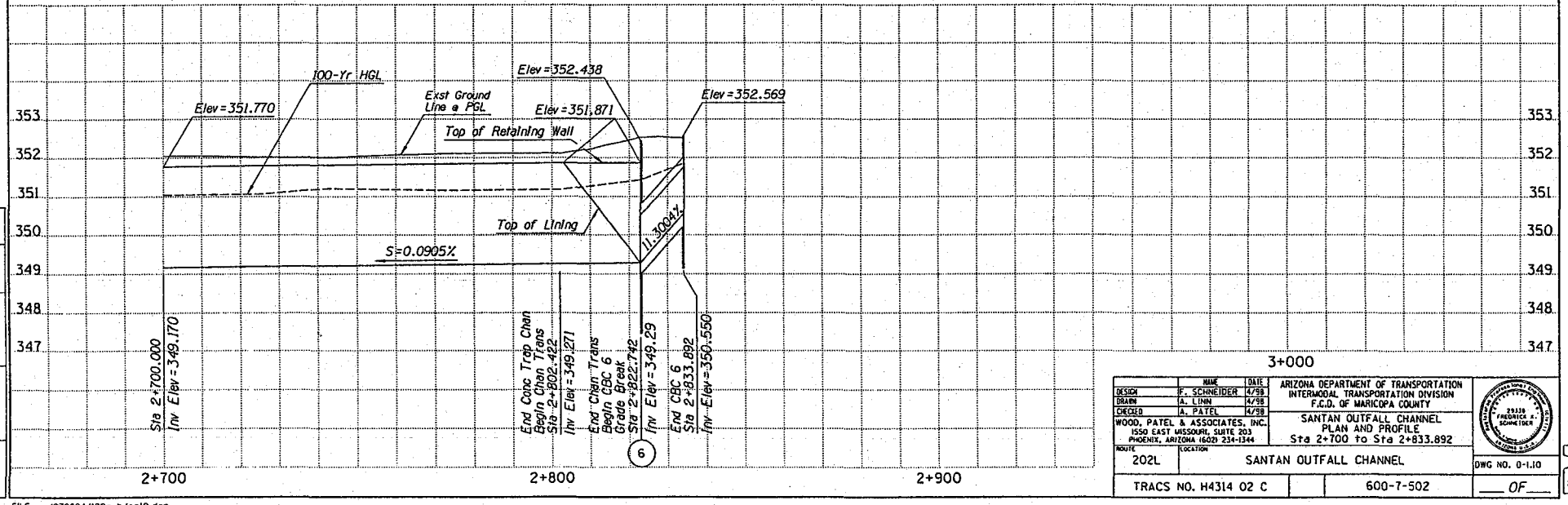

	NAME	DATE
DESIGN	F. SCHNEIDER	4/98
DRAWN	A. LINN	4/98
CHECKED	A. PATEL	4/98

WOOD, PATEL & ASSOCIATES, INC.
1550 EAST MISSOURI, SUITE 203
PHOENIX, ARIZONA (602) 234-1344

ARIZONA DEPARTMENT OF TRANSPORTATION
INTERMODAL TRANSPORTATION DIVISION
F.C.D. OF MARICOPA COUNTY

SANTAN OUTFALL CHANNEL
PLAN AND PROFILE
Sta 2+700 to Sta 2+833.892

ROUTE: 202L
LOCATION: SANTAN OUTFALL CHANNEL

DWG NO. 0-1.10

TRACS NO. H4314 02 C | 600-7-502 | ___ OF ___

FILE: v:/970604/100sub/pp10.dgn
DATE: 11/18/97

F.H.W.A. REGION	STATE	PROJECT NO.	SHEET NO.	TOTAL SHEETS	AS BUILT
9	ARIZ.	600-7-502	96	119	
		202L MA 050			

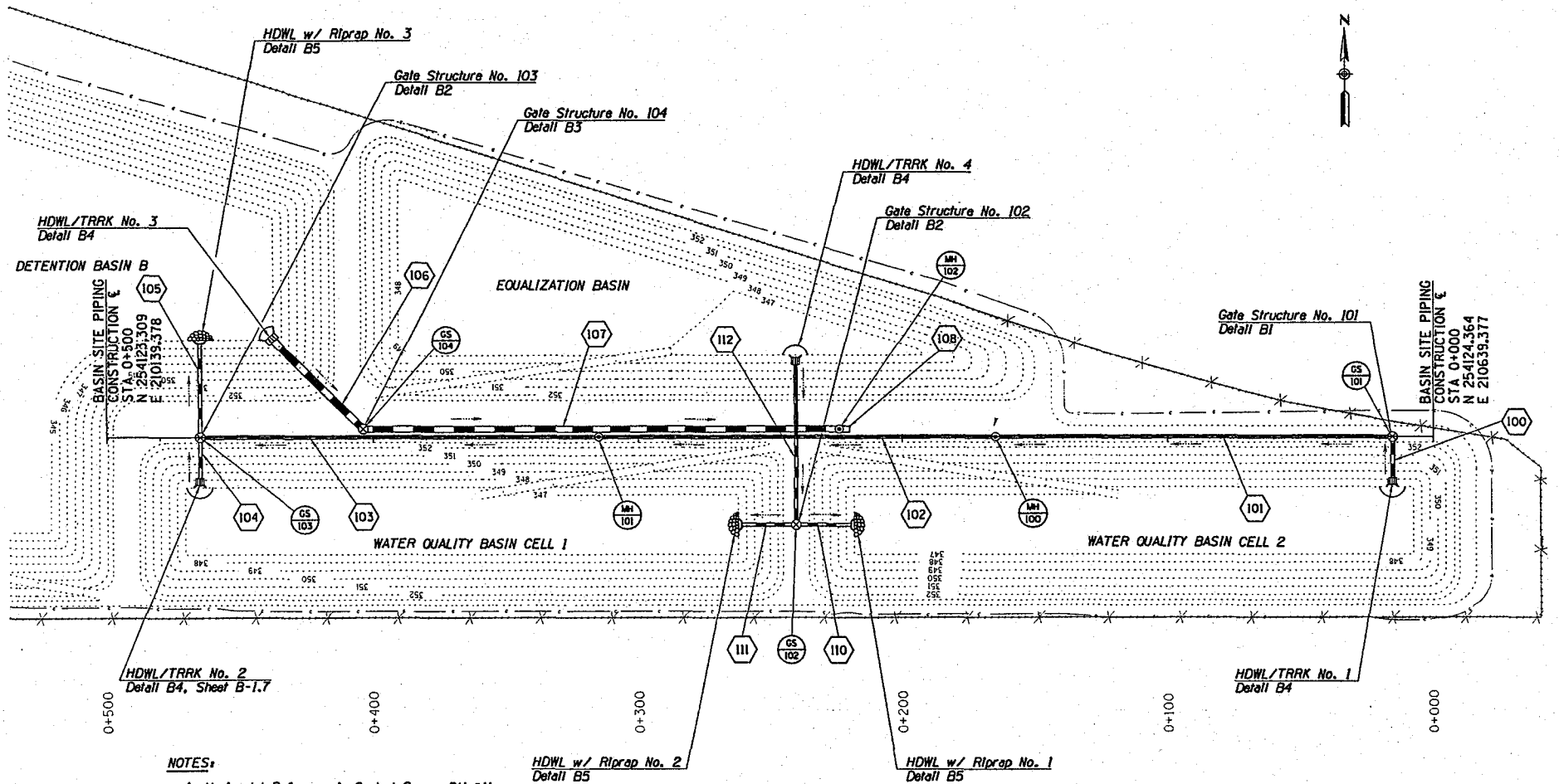

NOTES:

1. Horizontal Reference Is Control Survey BM #11 (Brass Cap) at Intersection of Kyrene Road and Pecos Road alignment, N 254039.8101, E 210692.8937.

2. Vertical Reference Is Control Survey BM #131 (rebar) at Intersection of Kyrene Road and Pecos Road alignment, N 254043.6160, E 210682.5858, Elev 354.3380.

	NAME	DATE
DESIGN	DJS	4-98
DRAWN	DRS	4-98
CHECKED	JJZ	4-98

HDR Engineering, Inc.

ARIZONA DEPARTMENT OF TRANSPORTATION
INTERMODAL TRANSPORTATION DIVISION
AND
FLOOD CONTROL DISTRICT OF MARICOPA COUNTY

BASIN PIPING PLAN

ROUTE 202L — LOCATION DETENTION BASIN B

DWG. NO. B-1.1

TRACS NO. H4314 02 C — 600-7-502 — ___ OF ___

FILE: pt\santon\952\basin\sitepipe.dgn
DATE: 05-Dec-97 16:25

VIEW NAME: SYSTIME DGNCSPECIFICATION

SURVEY NO.	PROJECT PLANS	REVISION	LOCATION	DATE

Metric

F.H.W.A. REGION	STATE	PROJECT NO.	SHEET NO.	TOTAL SHEETS	AS BUILT
9	ARIZ.	600-7-502	97	119	
		202L MA 050			

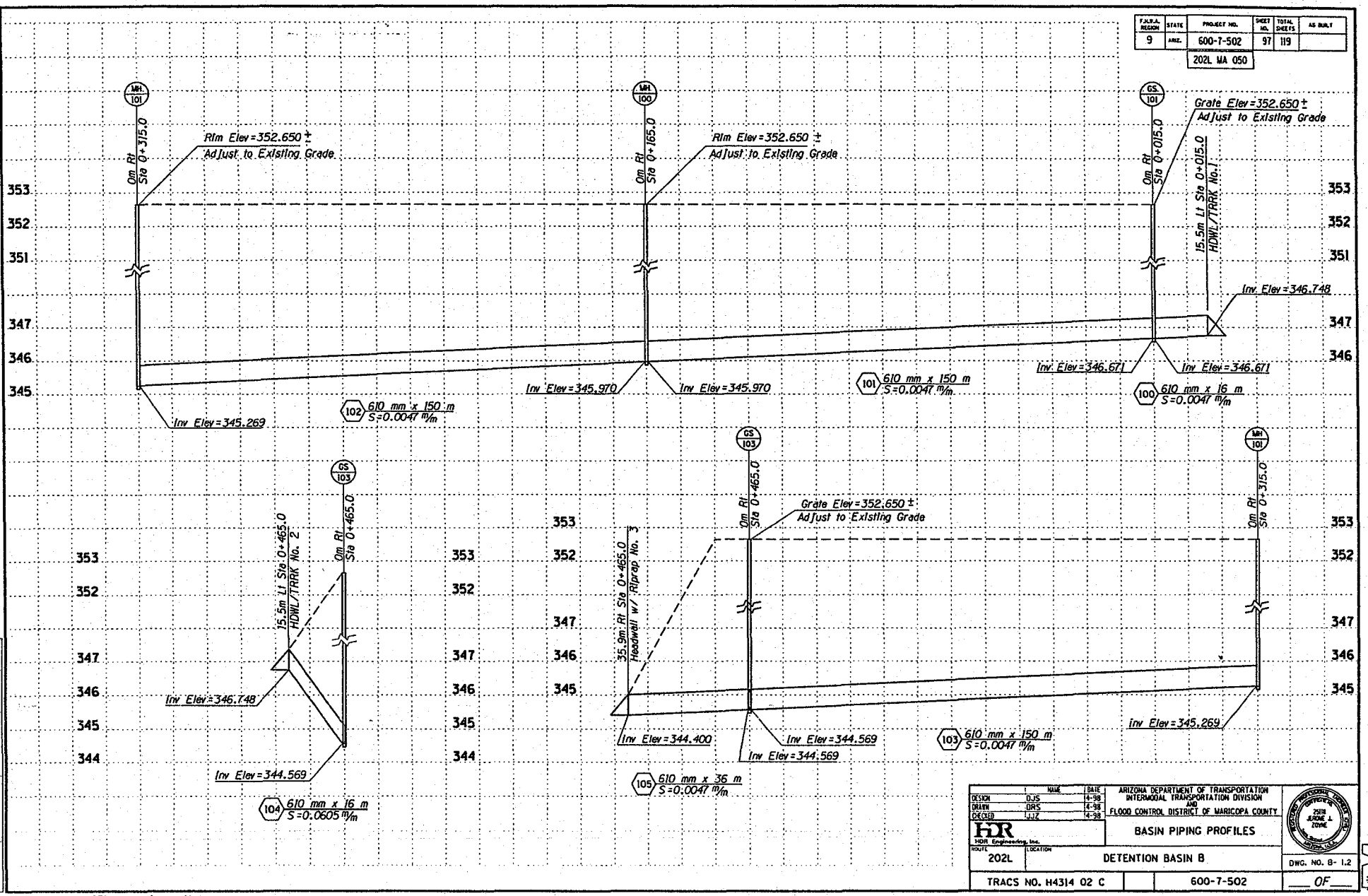

	NAME	DATE
DESIGN	DJS	4-98
DRAWN	DRS	4-98
CHECKED	JJZ	4-98

HDR Engineering, Inc.

ARIZONA DEPARTMENT OF TRANSPORTATION
INTERMODAL TRANSPORTATION DIVISION
AND
FLOOD CONTROL DISTRICT OF MARICOPA COUNTY

BASIN PIPING PROFILES

ROUTE 202L | LOCATION DETENTION BASIN B

DWG. NO. B- 1.2

TRACS NO. H4314 02 C | 600-7-502 | ___ OF ___

FILE: p:\santan\95%\basin\laterall.dgn
DATE: 05-Dec-97 16:27

F.H.W.A. REGION	STATE	PROJECT NO.	SHEET NO.	TOTAL SHEETS	AS BUILT
9	ARIZ.	600-7-502	98	119	
		202L MA 050			

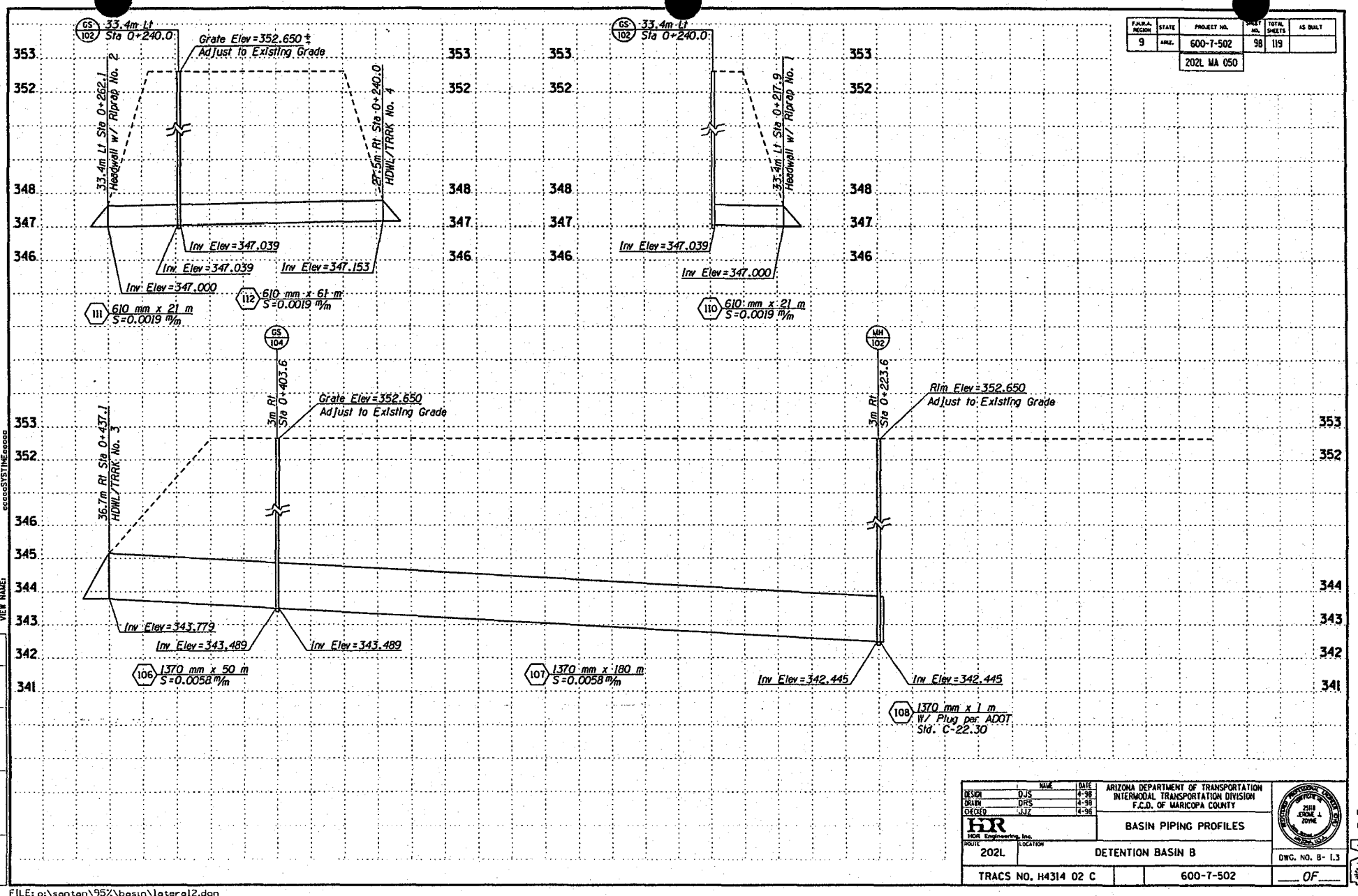

	NAME	DATE
DESIGN	DJS	4-98
DRAWN	DRS	4-98
CHECKED	JJZ	4-98

HDR Engineering, Inc.

ARIZONA DEPARTMENT OF TRANSPORTATION
INTERMODAL TRANSPORTATION DIVISION
F.C.D. OF MARICOPA COUNTY

BASIN PIPING PROFILES

ROUTE 202L | LOCATION DETENTION BASIN B

DWG. NO. B- 1.3

TRACS NO. H4314 02 C | 600-7-502 | OF

FILE: p:\santan\95%\basin\lateral2.dgn
DATE: 05-Dec-97 16:28

F.H.W.A. REGION	STATE	PROJECT NO.	SHEET NO.	TOTAL SHEETS	AS BUILT
9	ARIZ.	600-7-502	99	119	
		202L MA 050			

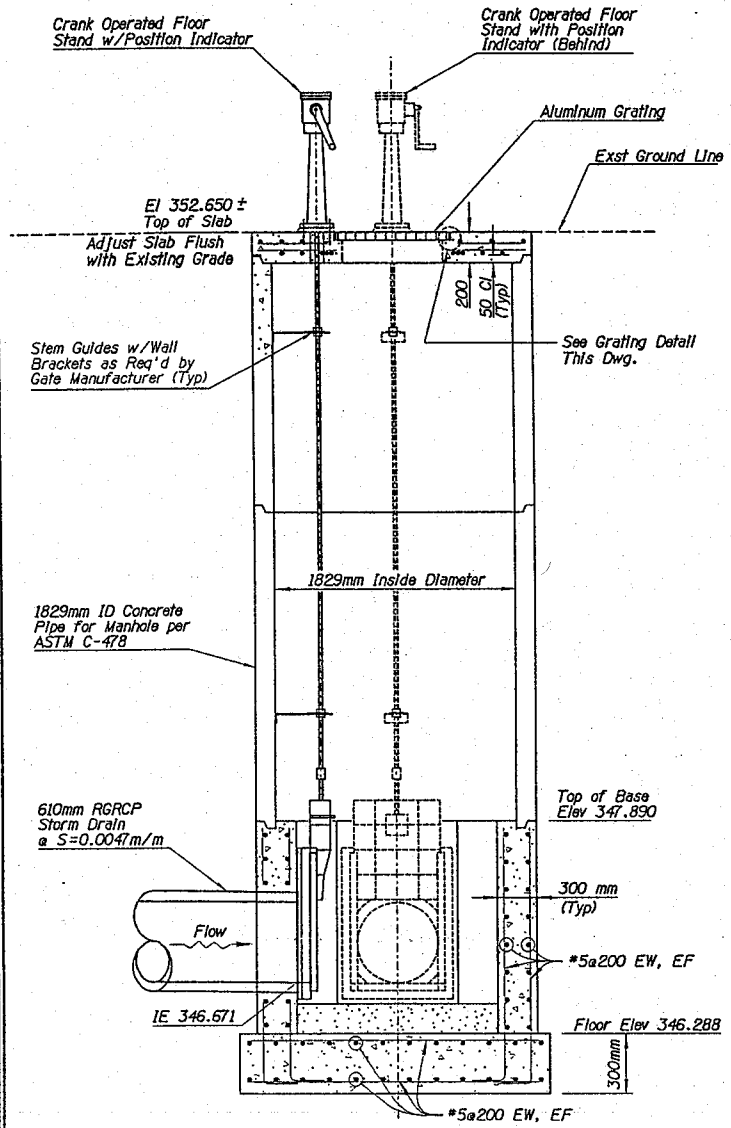

SECTION A-A

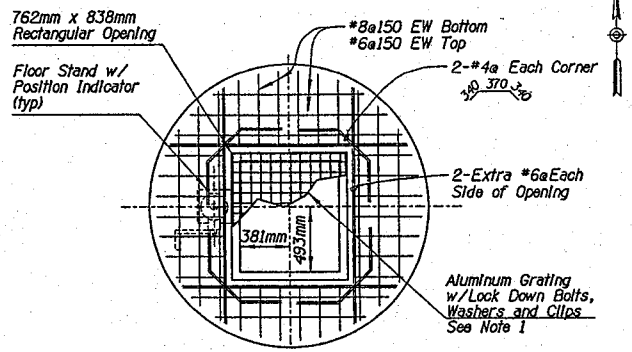

GATE STRUCTURE NO. 101-TOP PLAN

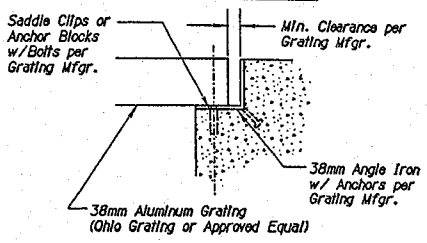

GRATING DETAIL

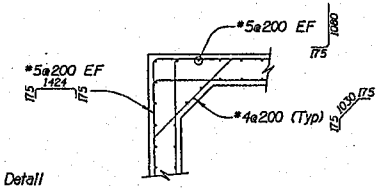

TYPICAL CORNER REINFORCEMENT

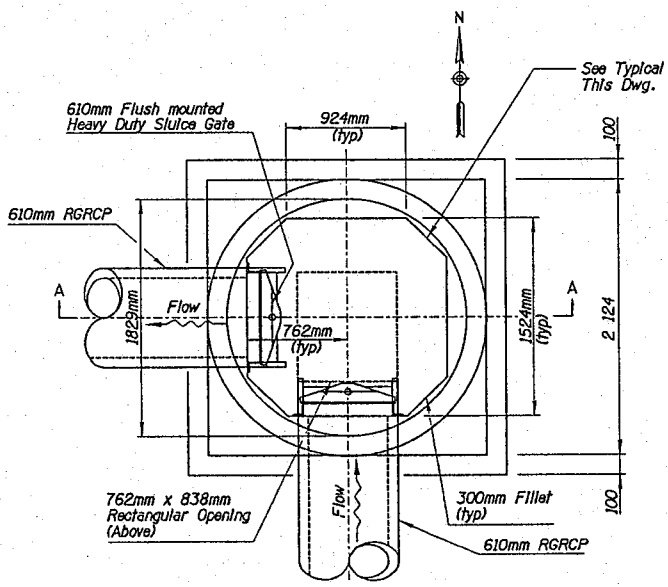

GATE STRUCTURE NO. 101

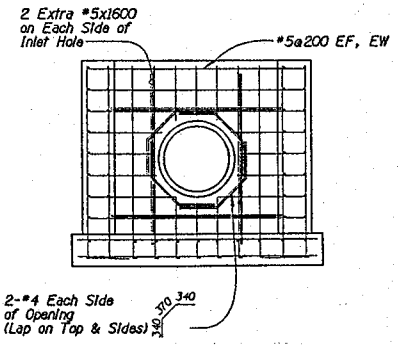

TYPICAL INLET REINFORCEMENT

DETAIL B1

GATE STRUCTURE DETAIL 101

NOTES:
1. Contractor to submit Lock Down Bolt, Washer and Clip detail to Engineer for approval.

	NAME	DATE
DESIGN	BKV	4-98
DRAWN	DRS	4-98
CHECKED	JJZ	4-98

ARIZONA DEPARTMENT OF TRANSPORTATION
INTERMODAL TRANSPORTATION DIVISION
AND
FLOOD CONTROL DISTRICT OF MARICOPA COUNTY

HDR Engineering, Inc.

DETAIL B1

ROUTE 202L | LOCATION DETENTION BASIN B

DWG. NO. B-1.4

TRACS NO. H4314 02C | 600-7-502 | ___ OF ___

REF FILE NAME(S):
FILE: o:\projects\santan\b1-4.dgn
DATE: 18-Feb-98 12:20

DATE	LOCATION	REVISIONS	FINISHED PLANS	SURVEY NO.

F.H.W.A. REGION	STATE	PROJECT NO.	SHEET NO.	TOTAL SHEETS	AS BUILT
9	ARIZ.	600-7-502	100	119	
		202L MA 050			

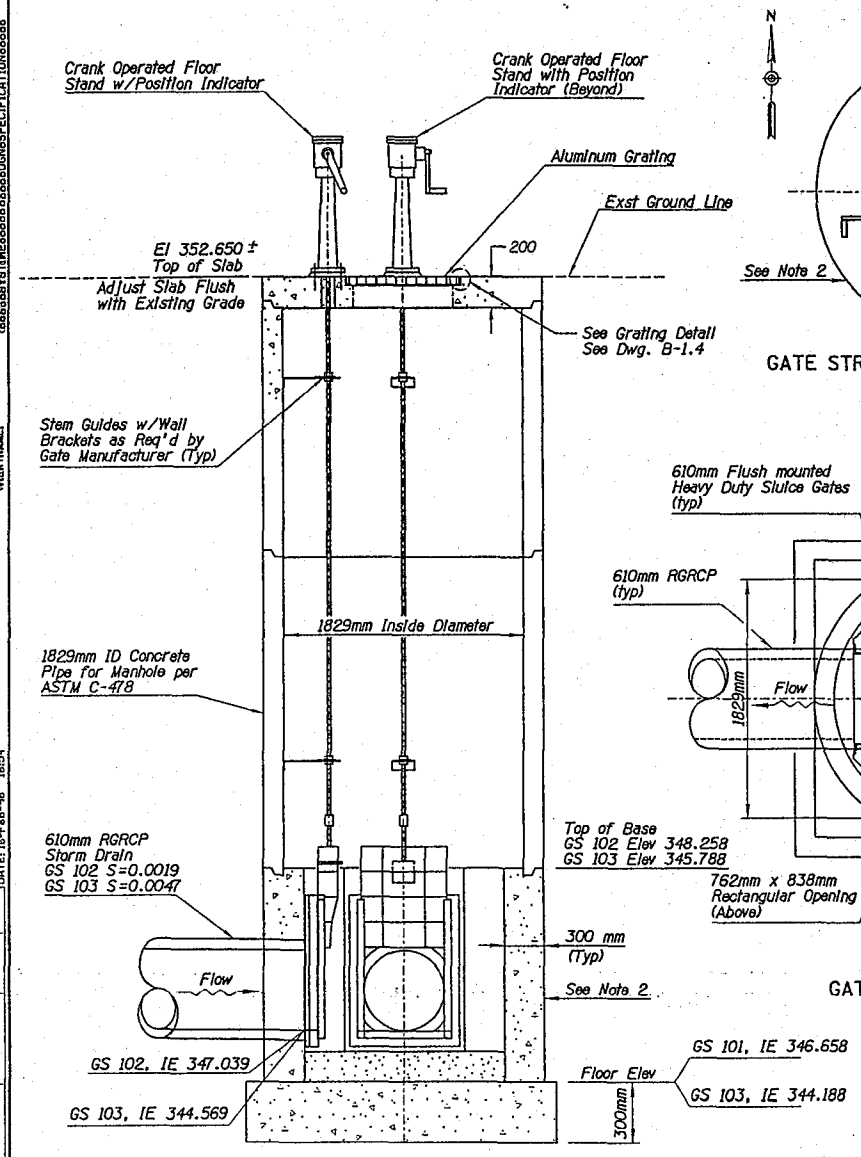

SECTION A-A

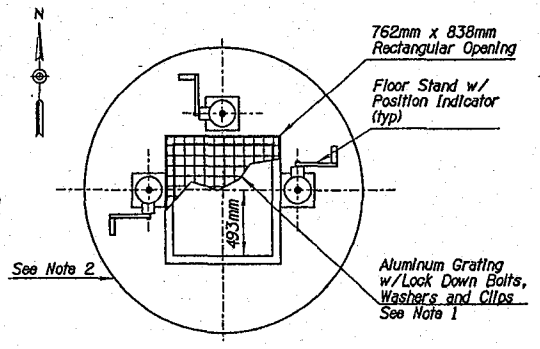

GATE STRUCTURE NO. 102-TOP PLAN

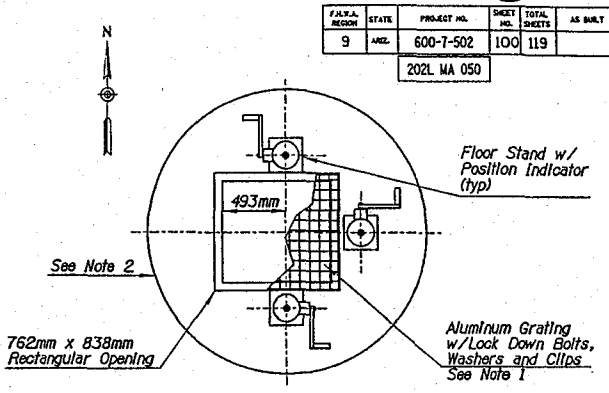

GATE STRUCTURE NO. 103-TOP PLAN

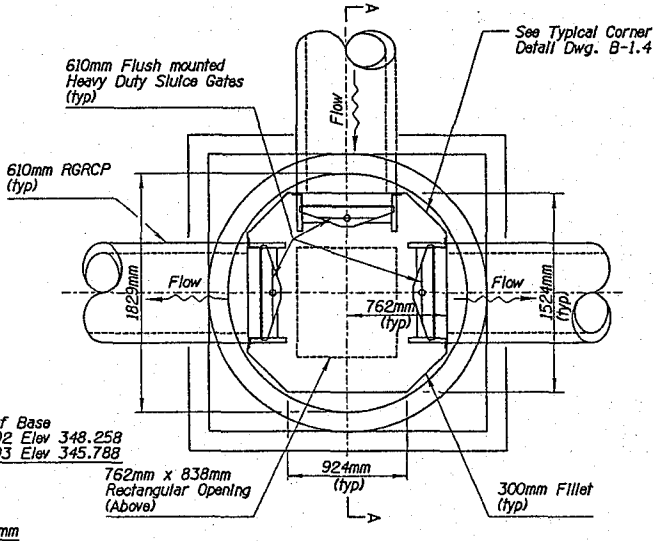

GATE STRUCTURE NO. 102

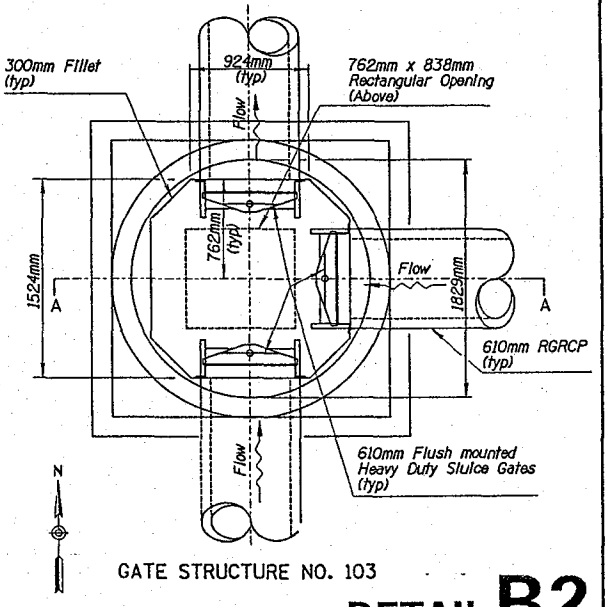

GATE STRUCTURE NO. 103

DETAIL B2

GATE STRUCTURE DETAILS 102 & 103

NOTES:
1. Contractor to submit Lock Down Bolt, Washer and Clip detail to Engineer for approval.
2. See Detail B1 for reinforcement details.

	NAME	DATE
DESIGN	BKV	4-98
DRAWN	DRS	4-98
CHECKED	JJZ	4-98

ARIZONA DEPARTMENT OF TRANSPORTATION
INTERMODAL TRANSPORTATION DIVISION
AND
FLOOD CONTROL DISTRICT OF MARICOPA COUNTY

HDR Engineering, Inc.

DETAIL B2

ROUTE 202L LOCATION DETENTION BASIN B

DWG. NO. B-1.5

TRACS NO. H4314 02C | 600-7-502 | ___ OF ___

REF FILE NAMES:
FILE: o:\projects\santan\b1-5.dgn
DATE: 16-Feb-98 16:54

DATE	LOCATION	REVISIONS	FINISH PLANS	SURVEY NO.

VIEW NAME:

CONDITIONS OF SPECIFICATION

F.H.W.A. REGION	STATE	PROJECT NO.	SHEET NO.	TOTAL SHEETS	AS BUILT
9	ARIZ.	600-7-502	101	119	
		202L MA 050			

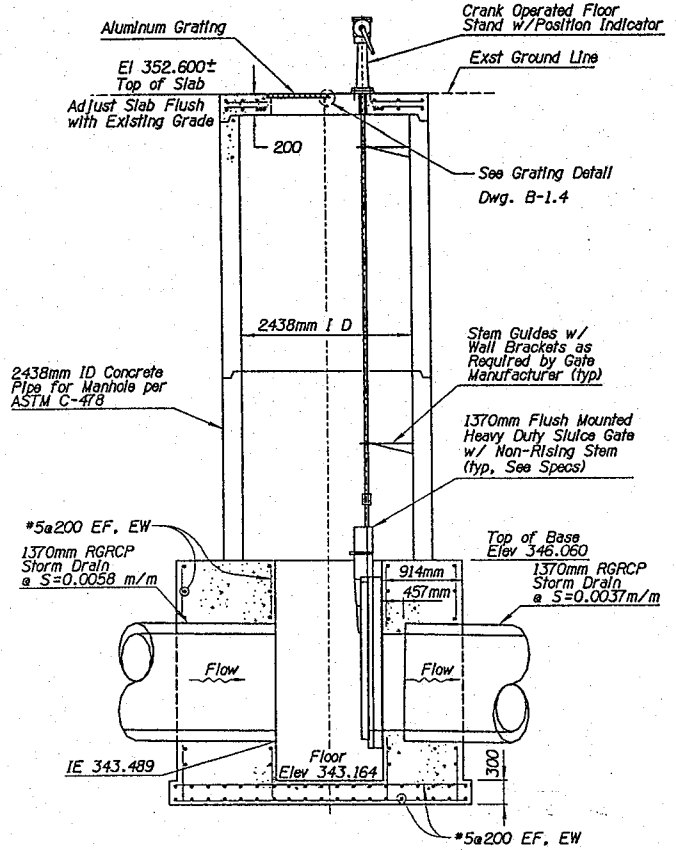

SECTION A-A

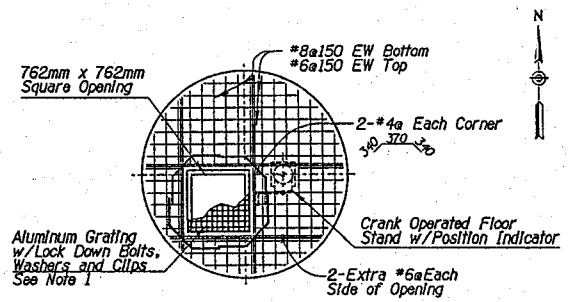

GATE STRUCTURE NO. 104-TOP PLAN

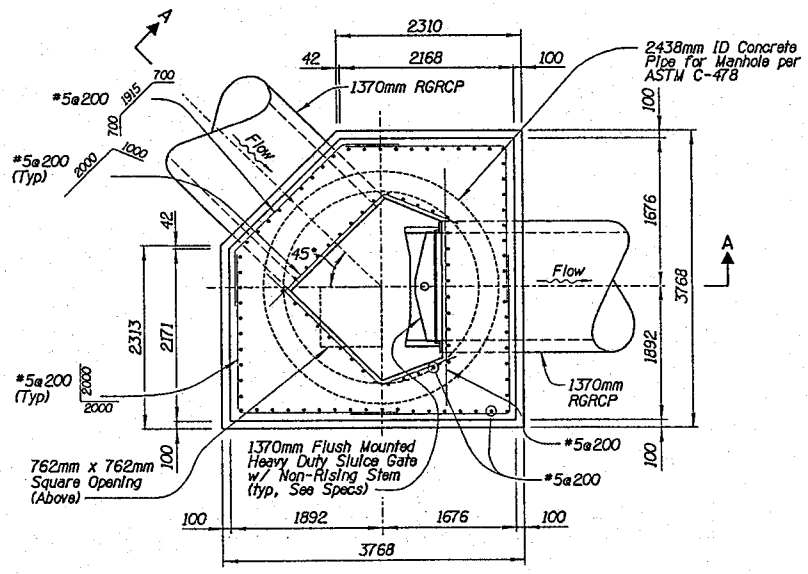

GATE STRUCTURE NO. 104

DETAIL B3

GATE STRUCTURE DETAIL 104

NOTES:

1. Contractor to submit Lock Down Bolt, Washer and Clip detail to Engineer for approval.

	NAME	DATE	
DESIGN	BKV	4-98	ARIZONA DEPARTMENT OF TRANSPORTATION INTERMODAL TRANSPORTATION DIVISION AND FLOOD CONTROL DISTRICT OF MARICOPA COUNTY
DRAWN	ORS	4-98	
CHECKED	JJZ	4-98	

HDR Engineering, Inc.

DETAIL B3

ROUTE 202L | LOCATION DETENTION BASIN 8

DWG. NO. B-1.6

TRACS NO. H4314 02C | 600-7-502 | ___ OF ___

REGISTERED PROFESSIONAL ENGINEER (CIVIL) BRIAN K. HARWALL 30329 ARIZONA U.S.A.

Metric

REF FILE NAMES:
FILE: c:\projects\santan\b1-6.dgn
DATE: 19-Feb-98 11:50

SHEET NO.	FINISHED PLANS	REVISIONS	LOCATION	DATE

ooooo DGNoSPECIFICATIONoooooo

F.A.H.W.A. REGION	STATE	PROJECT NO.	SHEET NO.	TOTAL SHEETS	AS BUILT
9	ARIZ.	600-7-502	102	119	
		202L MA 050			

CONSTRUCTION DATA FOR HEADWALL WITH TRASHRACK

HDWL No.	STATION	PLAN/PROFILE REF DWG	PIPE 1	Elev A	Elev B	Elev C	Elev D	E	F	H	I	J	K	L	M	NO OF BARS	QUANTITIES CONC Cm	QUANTITIES REINF. STL. Kg
1	Sta 0+015.000, 15.500 Lt	B-1.1	610 mm	348.272	346.908	346.748	346.848	1829 mm	100 mm	610 mm	1219 mm	1422 mm	1302 mm	98 mm	1707 mm	7	5	160
2	Sta 0+465.000, 15.500 Lt	B-1.1	610 mm	348.272	346.908	346.748	346.848	1829 mm	100 mm	610 mm	1219 mm	1422 mm	1302 mm	98 mm	1707 mm	7	5	160
3	Sta 0+437.100, 36.700 Rt	B-1.1	1370 mm	345.912	344.286	343.779	344.236	2438 mm	457 mm	817 mm	1219 mm	2438 mm	2318 mm	102 mm	1981 mm	13	5	213
4	Sta 0+240.000, 27.500 Rt	B-1.1	610 mm	348.677	347.314	347.153	347.253	1829 mm	100 mm	610 mm	1219 mm	1422 mm	1302 mm	98 mm	1707 mm	7	5	160

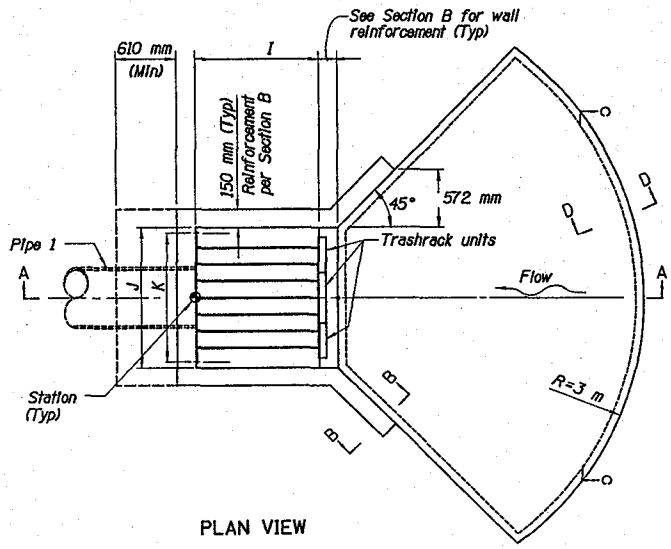

PLAN VIEW

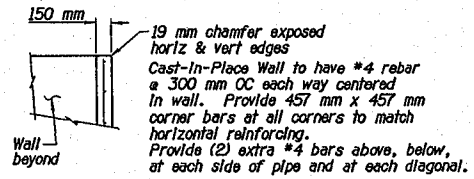

SECTION B-B

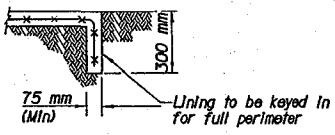

SECTION D-D

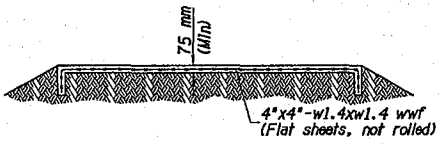

SECTION C-C

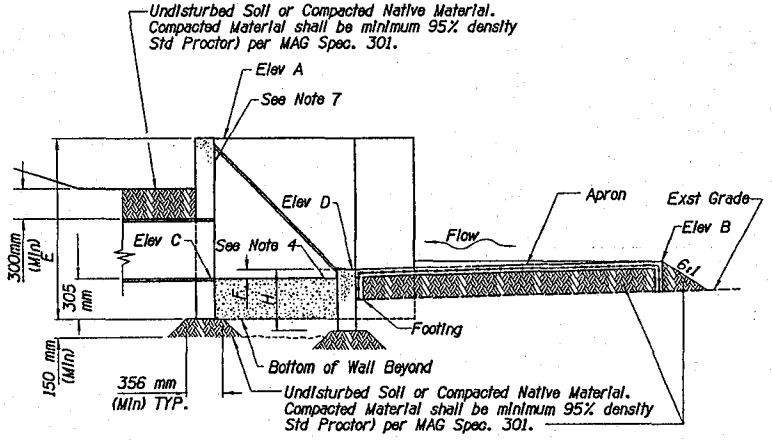

SECTION A-A

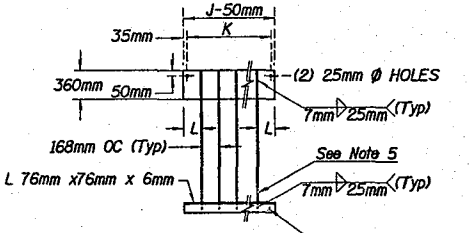

TRASH RACK

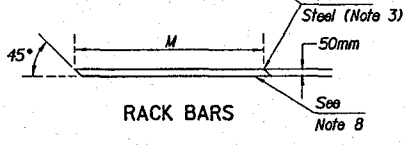

RACK BARS

NOTES:

1. See Plan/Profile drawings for orientation of headwalls.
2. MAG Class A Concrete cast-in-place walls and apron shall be constructed in accordance with MAG Uniform Specifications for Public Works Sections 505, 725, 726 and 727.
3. Reinforcing Steel to be ASTM A615 grade 60. Structural steel to be ASTM A709 Grade 36.
4. Concrete filler to match invert elevation at (Elev C) and match slope of pipe. Minimum thickness 300 mm.
5. Trashracks may be installed in any sequence or order, maintaining the 168 mm spacing between the bars of adjacent units and equal distance from each side of the headwall.
6. Install Trashracks with 13 mm dia x 95 mm expansion anchors, using the slotted holes as a template.
7. 360 mm plate shall not extend below top of pipe.
8. Remove all scale from rack bars. Metal spray or paint with one coat zinc chromate or red lead primer. Overcoat with grey industrial enamel, MAG Spec. 790.

DETAIL B4

HEADWALL W/TRASHRACK DETAIL

	NAME	DATE
DESIGN	OJS	04-98
DRAWN	DRS	04-98
CHECKED	LJZ	04-98

ARIZONA DEPARTMENT OF TRANSPORTATION
INTERMODAL TRANSPORTATION DIVISION
AND
FLOOD CONTROL DISTRICT OF MARICOPA COUNTY

HDR Engineering, Inc.

DETAIL B4

ROUTE 202L | LOCATION DETENTION BASIN B

DWG. NO. B-1.7

TRACS NO. H4314 02C | 600-7-502 | ___ OF ___

Metric

F.A.H.W.A. REGION	STATE	PROJECT NO.	SHEET NO.	TOTAL SHEETS	AS BUILT
9	ARIZ.	600-7-502	103	119	
		202L MA 050			

CONSTRUCTION DATA FOR HEADWALL WITH RIP RAP

HDWL No.	STATION	PLAN/PROFILE REF DWG	PIPE 1	Elev A	Elev B	Elev C	Elev D	E	F	H	I	J	K	QUANTITIES CONC CM	REINF. STL. Kg	RIPRAP CM
1	Sta 0+219.9, 33.4 m Lt	B-1.1	610 mm	348.533	347.100	347.000	347.100	1829	100	610	1219	1422	1302	3	145	4
2	Sta 0+262.1, 33.4 m Lt	B-1.1	610 mm	348.533	347.100	347.000	347.100	1829	100	610	1219	1422	1302	3	145	4
3	Sta 0+465, 35.9 m Rt	B-1.1	610 mm	345.933	344.500	344.400	344.500	1829	100	610	1219	1422	1302	3	145	4

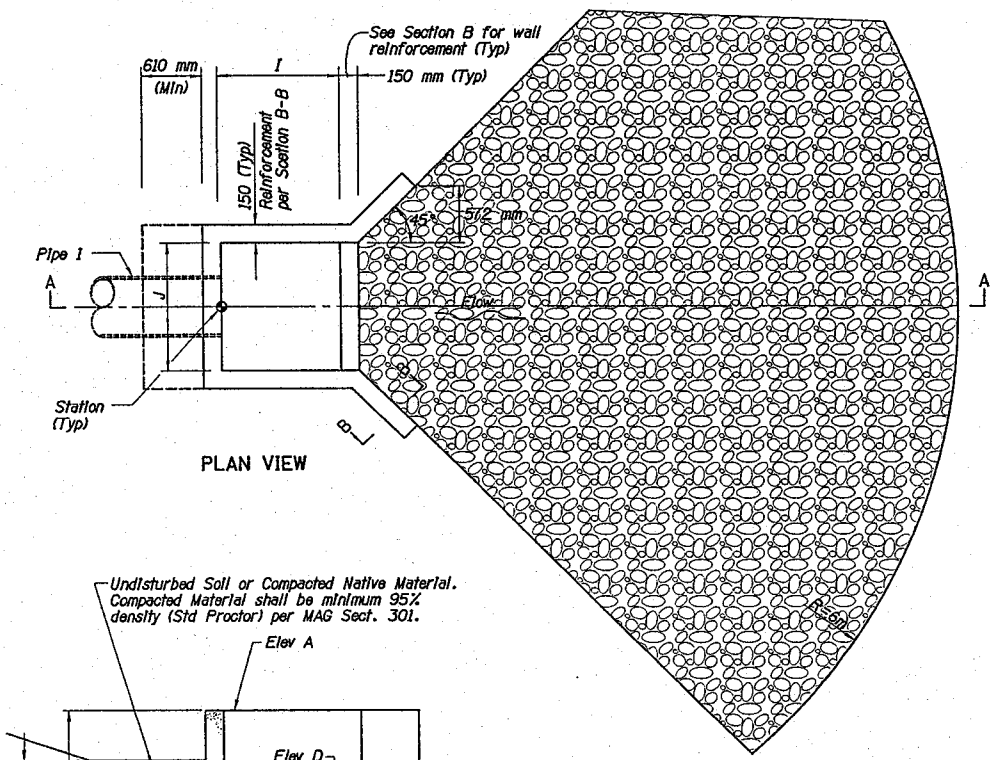

PLAN VIEW

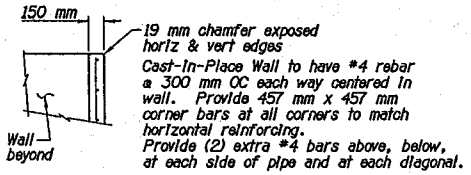

SECTION B-B

NOTES

1. See Plan/Profile drawings for orientation of headwalls.
2. MAG Class A Concrete cast-in-place walls shall be constructed in accordance with MAG Uniform Specifications for Public Works Sections 505, 725, 726 and 727.
3. Reinforcing Steel to be ASTM A615 grade 60.
4. Concrete filler to match invert elevation at (Elev C) and match slope of pipe. Minimum thickness 300 mm.

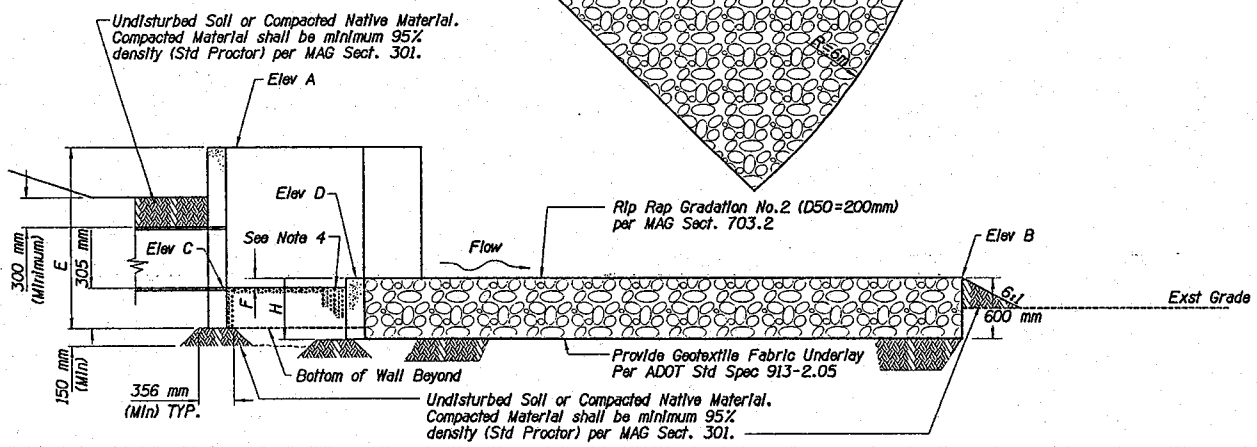

SECTION A-A

DETAIL B5

HEADWALL DETAIL

	NAME	DATE
DESIGN	DJS	2-98
DRAWN	DRS	2-98
CHECKED	JJZ	2-98

ARIZONA DEPARTMENT OF TRANSPORTATION INTERMODAL TRANSPORTATION DIVISION AND FLOOD CONTROL DISTRICT OF MARICOPA COUNTY

HDR Engineering, Inc.

DETAIL B5

ROUTE 202L | LOCATION DETENTION BASIN B

DWG. NO. B-1.8

TRACS NO. H4314 02C | 600-7-502 | ___ OF ___

Metric

APPENDIX A

Hydrologic Analysis
HEC-1 Computer Model
Culvert & Basin Piping Analyses

- Santan Freeway 7-10'x8' RCB / HY-8
- Basin B Rating for HEC-1 Model
- Basin B Outlet 3-10' x 4' RCB / HY-8
- Equalization 2-8'x8' RCB / HY-8
- Detention Basin B Elev.-Vol.- Area Calc.
- Equalization Basin Elev.-Vol.- Area Calc.
- Equalization to Wetland 24" RCP / HY-8
- Basin B 54" (Evacuation) Outlet RCP / HY-8
- HEC-1 Model SVRD05~2. DAT

CURRENT DATE: 05-26-1998
CURRENT TIME: 17:19:16

FILE DATE: 05-26-1998
FILE NAME: SANTRCB

Santan Freeway Crossing

FHWA CULVERT ANALYSIS
HY-8, VERSION 3.2

CULV	SITE DATA: INLET ELEV. (FT)	OUTLET ELEV. (FT)	CULVERT LENGTH (FT)	CULVERT SHAPE, MATERIAL, INLET: BARRELS SHAPE MATERIAL	SPAN (FT)	RISE (FT)	MANNING n	INLET TYPE
1	1142.00	1141.00	250.00	7 RCB	10.00	8.00	.012	CONVENTIONAL
2								
3								
4								
5								
6								

FILE: SANTRCB CULVERT HEADWATER ELEVATION (FT) DATE: 05-26-1998

DISCHARGE	1	2	3	4	5	6	ROADWAY
0	1154.40	0.00	0.00	0.00	0.00	0.00	1155.50
289	1154.41	0.00	0.00	0.00	0.00	0.00	1156.71
577	1154.43	0.00	0.00	0.00	0.00	0.00	1157.41
866	1154.46	0.00	0.00	0.00	0.00	0.00	1158.02
1154	1154.50	0.00	0.00	0.00	0.00	0.00	1158.55
1443	1154.56	0.00	0.00	0.00	0.00	0.00	1159.04
1731	1154.63	0.00	0.00	0.00	0.00	0.00	1159.49
2020	1154.72	0.00	0.00	0.00	0.00	0.00	1159.93
2308	1154.81	0.00	0.00	0.00	0.00	0.00	1160.34
2597	1154.92	0.00	0.00	0.00	0.00	0.00	1160.74
2885	1155.04 *	0.00	0.00	0.00	0.00	0.00	1161.11

Santan Freeway Crossing

MY

CULVERT # 1

PERFORMANCE CURVE FOR 7 BARREL(S)

Q (cfs)	HWE (ft)	TWE (ft)	ICH (ft)	OCH (ft)	FLOW TYPE	CCE (ft)	FCE (ft)	TCE (ft)	VO (fps)
0	1154.40	1154.40	0.00	12.40	0-NF	0.00	1142.00	0.00	0.00
289	1154.41	1154.40	1.24	12.41	4-FF	0.00	0.00	0.00	0.52
577	1154.43	1154.40	1.96	12.43	4-FF	0.00	0.00	0.00	1.03
866	1154.46	1154.40	2.57	12.46	4-FF	0.00	0.00	0.00	1.55
1154	1154.50	1154.40	3.11	12.50	4-FF	0.00	0.00	0.00	2.06
1443	1154.56	1154.40	3.61	12.56	4-FF	0.00	0.00	0.00	2.58
1731	1154.63	1154.40	4.08	12.63	4-FF	0.00	0.00	0.00	3.09
2020	1154.72	1154.40	4.53	12.72	4-FF	0.00	0.00	0.00	3.61
2308	1154.81	1154.40	4.96	12.81	4-FF	0.00	0.00	0.00	4.12
2597	1154.92	1154.40	5.37	12.92	4-FF	0.00	0.00	0.00	4.64
2885	1155.04	1154.40	5.76	13.04	4-FF	0.00	0.00	0.00	5.15

El. inlet face invert 1142.00 ft El. outlet invert 1141.00 ft
El. inlet throat invert 0.00 ft El. inlet crest 0.00 ft

***** SITE DATA ***** CULVERT INVERT **********

INLET STATION (FT)	0.00
INLET ELEVATION (FT)	1142.00
OUTLET STATION (FT)	250.00
OUTLET ELEVATION (FT)	1141.00
NUMBER OF BARRELS	7.00
SLOPE (V-FT/H-FT)	0.0040
CULVERT LENGTH ALONG SLOPE (FT)	250.00

***** CULVERT DATA SUMMARY **********

BARREL SHAPE	BOX
BARREL SPAN	10.00 FT
BARREL RISE	8.00 FT
BARREL MATERIAL	CONCRETE
BARREL MANNING'S N	0.012
INLET TYPE	CONVENTIONAL
INLET EDGE AND WALL	1.5:1 BEVEL (90 DEG.)
INLET DEPRESSION	NONE

Santan Freeway Crossing

TAILWATER

CONSTANT WATER SURFACE ELEVATION
1154.40

ROADWAY OVERTOPPING DATA

ROADWAY SURFACE	PAVED
EMBANKMENT TOP WIDTH (FT)	2.00
CREST LENGTH (FT)	70.00
OVERTOPPING CREST ELEVATION (FT)	1155.50

BASIN B Rating for HEC-1 Model								J. Zovne	5/18/98
								Santan Channel Project	
								ADOT contract 97-16	
								Phase 2 Design	
	Elev.	Head(ft)	Length(ft)	C Value	Qweir(cfs)	Qrcb(cfs)	Qtotal	Comments	
	1150.1					0	0	RCB invert @ 1150.1, 350.55m	
	1151.07					100	100		
	1151.65					200	200		
	1152.13					300	300		
	1152.63					400	400		
	1153.09					500	500		
	1153.7	0	1000		0	636	636	Weir Elev. @ 1153.7 351.65m	
	1153.8	0.1	1000	2.82	89	659	748		
	1153.9	0.2	1000	2.82	252	682	934		
	1154	0.3	1000	2.94	483	705	1188		
	1154.1	0.4	1000	3.04	769	728	1497	Top of RCB@ 1154.1, 351.77m	
	1154.2	0.5	1000	3.13	1107	751	1858		
	1154.3	0.6	1000	3.20	1487	774	2261		
	1154.4	0.7	1000	3.26	1909	796	2705		
	1154.5	0.8	1000	3.32	2376	818	3194	Target HWL	
Assumptions:									
1. Weir Coefficients from King's Handbook of Hydraulics, Table 57attached.									
2. Weir will be a slope-paved with 2:1 slopes, both sides.									
3. Velocity of approach negligible.									
4. Qrcb rating for 3-10x4 box culvert from HY8, attached.									

Coefficients covering the range of these experiments are given in Table 56 (p. 166). The velocity of approach correction should be made in accordance with formula (2) or (3).

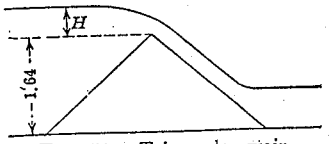

FIG. 51.—Triangular weir.

Weirs of Trapezoidal Section.—Figure 52 represents a weir of trapezoidal section with both upstream and downstream faces inclined. Experiments on this type of weir were made by Bazin and the U. S. Deep Waterways Board. Bazin's experiments were all on weirs 2.64 feet high, the breadth of crest AB varying from 0.66 foot to 1.32 feet. Experiments on two weirs of this type, each 4.9 feet high, were performed by the U. S. Deep Waterways Board.

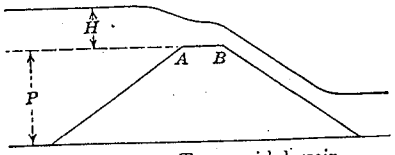

FIG. 52.—Trapezoidal weir.

Coefficients covering the range of Bazin's experiments are given in Table 57 (p. 167). Table 58 (p. 167) gives coefficients resulting from the experiments by the U. S. Deep Waterways Board.

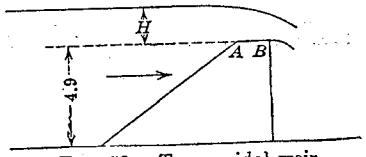

FIG. 53.—Trapezoidal weir.

For weirs of trapezoidal cross-section with sloping upstream and vertical downstream face (Fig. 53) there are five series of experiments by the U. S. Deep Waterways Board. All of the models for these experiments were approximately 4.9 feet high, and the breadth of crest AB was either 0.33 or 0.66 foot. The length of all weirs was 6.58 feet.

Table 59 (p. 168) gives coefficients derived from these experiments. Discharges should be corrected for velocity of approach by formula (2) or (3).

Weirs of Irregular Section.—Figures 54 to 58, inclusive, represent models of weirs experimented upon by the U. S. Deep Waterways Board, under the direction of G. W. Rafter, at the hydraulic laboratory of Cornell University. From four to seven experiments were run on each model, the range of head varying approximately from 1 foot to 5.5 feet. Values of C tabulated from these experiments are given in Table 60 (p. 168).

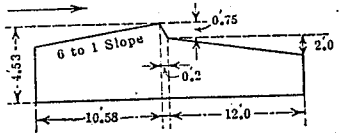

FIG. 54

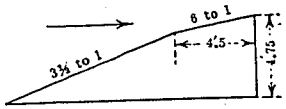

FIG. 55

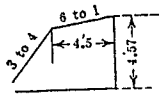

FIG. 56.

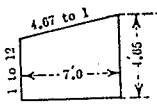

FIG. 57.

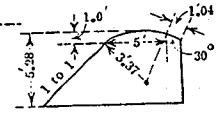

FIG. 58.

FIGS. 54 to 58.

Experiments on models of the old Croton dam (Figs. 59 to 63, inclusive) were made at Cornell University in 1899, for the city of New York, under the direction of J. R. Freeman. The models were given different degrees of roughness to determine the effect of roughness of crest on discharge. Table 61 (p. 168) gives the tabulated results of these experiments.

Experiments for the U. S. Geological Survey, under the direction of Robert E. Horton, were performed in 1903 at the hydraulic laboratory of Cornell University to determine the coefficients of discharge of weirs modeled after various types of dams. Figures 64 to 71, inclusive, show forms of crests of models experimented upon. The weirs were all 11.25 feet high and either 8 or 15 feet long. The purpose of the experiments was to enable the Geological Survey to determine more accurately discharges over weirs at gaging stations. Coefficients obtained from these experiments are given in Table 62 (p. 169).

Figure 72 is a cross-section of the old dam at Austin, Tex. Five series of gagings of flow over this dam were made with

TABLE 55.—VALUES OF C IN THE FORMULA $Q = CLH^{3/2}$, BEING THE MEAN AND EXTENSION OF EXPERIMENTAL RESULTS, ON WEIRS OF TRIANGULAR CROSS-SECTION WITH VERTICAL UPSTREAM FACE AND SLOPING DOWNSTREAM FACE. THIS TABLE SHOULD BE USED ONLY FOR HEADS ABOVE 0.7 FOOT

Slope of downstream face	Value of C	Slope of downstream face	Value of C	Slope of downstream face	Value of C
Hor. Vert.		Hor. Vert.		Hor. Vert.	
1 to 1	3.85	6 to 1	3.07	12 to 1	2.86
2 to 1	3.54	7 to 1	3.02	14 to 1	2.80
3 to 1	3.35	8 to 1	2.98	16 to 1	2.76
4 to 1	3.21	9 to 1	2.94	18 to 1	2.72
5 to 1	3.13	10 to 1	2.92	20 to 1	2.69

TABLE 56.—VALUES OF C IN THE FORMULA $Q = CLH^{3/2}$ FOR WEIRS OF TRIANGULAR CROSS-SECTION WITH BOTH FACES INCLINED. FOR HEADS ABOVE 1.5 FEET USE THE VALUE OF C GIVEN FOR A HEAD OF 1.5 FEET

Slope of upstream face	Slope of downstream face	Head in feet, H										
		0.2	0.3	0.4	0.5	0.6	0.7	0.8	0.9	1.0	1.2	1.5
Hor. Vert.	Hor. Vert.											
1 to 1	1 to 1	....	4.26	4.20	4.14	4.11	4.11	4.11	4.10	4.08	3.93	3.75
1 to 1	2 to 1	3.82	3.80	3.77	3.77	3.79	3.82	3.84	3.85	3.85	3.85	3.84
1 to 1	3 to 1	....	3.55	3.52	3.48	3.46	3.45	3.46	3.47	3.48	3.47	3.46
2 to 1	2 to 1	3.88	3.85	3.83	3.81	3.81	3.83	3.86	3.87	3.87	3.87	3.87
1 to 1	2 to 1	3.82	3.81	3.77	3.77	3.78	3.82	3.83	3.84	3.84	3.84	3.84
1 to 2	2 to 1	3.74	3.71	3.68	3.69	3.72	3.73	3.73	3.74	3.74	3.73	3.71
1 to 3	2 to 1	3.65	3.64	3.64	3.67	3.68	3.69	3.69	3.69	3.69	3.68	3.66
Vertical	2 to 1	3.56	3.47	3.47	3.51	3.54	3.57	3.58	3.58	3.58	3.59	3.57

TABLE 57.[1]—VALUES OF C IN THE FORMULA $Q = CLH^{3/2}$ FOR WEIRS OF TRAPEZOIDAL CROSS-SECTION WITH BOTH FACES INCLINED. THIS TABLE INDICATES THAT VALUES OF C INCREASE SLIGHTLY FOR HEADS ABOVE 1.5 FEET

Slope of upstream face	Slope of downstream face	Width of crest in feet	Head in feet, H										
			0.2	0.3	0.4	0.5	0.6	0.7	0.8	0.9	1.0	1.2	1.5
Hor. Vert.	Hor. Vert.												
1 to 2	1 to 1	0.66	2.70	2.82	2.89	3.02	3.13	3.24	3.34	3.44	3.52	3.66	3.82
1 to 2	2 to 1	0.66	2.71	2.79	2.83	2.92	3.03	3.14	3.27	3.32	3.38	3.50	3.61
1 to 2	3 to 1	0.66	2.70	2.76	2.80	2.91	3.00	3.07	3.14	3.21	3.27	3.37	3.45
1 to 2	4 to 1	0.66	2.71	2.74	2.84	2.88	2.98	3.06	3.12	3.17	3.21	3.28	3.35
1 to 2	5 to 1	0.66	2.71	2.80	2.86	2.88	2.93	3.02	3.08	3.12	3.17	3.23	3.26
1 to 2	2 to 1	1.32	....	2.71	2.77	2.80	2.80	2.84	2.88	2.93	2.98	3.08	3.22
1 to 2	4 to 1	1.32	....	2.76	2.80	2.82	2.82	2.85	2.88	2.91	2.94	3.01	3.10
1 to 2	6 to 1	1.32	....	....	2.79	2.80	2.82	2.85	2.87	2.90	2.93	2.98	3.08
2 to 1	2 to 1	0.67	2.82	2.94	3.04	3.13	3.20	3.26	3.32	3.38	3.43	3.51	3.61
1 to 1	2 to 1	0.67	2.73	2.86	2.92	3.02	3.12	3.21	3.29	3.36	3.42	3.53	3.65
1 to 3	2 to 1	0.67	2.50	2.62	2.75	2.87	2.99	3.09	3.18	3.27	3.34	3.46	3.55
Vertical	2 to 1	0.67	2.55	2.58	2.66	2.77	2.90	2.99	3.09	3.18	3.26	3.39	3.51

TABLE 58.[2]—VALUES OF C IN THE FORMULA $Q = CLH^{3/2}$ FOR WEIRS OF TRAPEZOIDAL CROSS-SECTION WITH BOTH FACES INCLINED

Slope of upstream face	Slope of downstream face	Width of crest in feet	Head in feet, H									
			1.6	1.8	2.0	2.5	3.0	3.5	4.0	4.5	5.0	5.5
Hor. Vert.	Hor. Vert.											
2 to 1	2 to 1	0.67	3.57	3.56	3.56	3.57	3.58	3.60	3.62	3.65	3.68	3.70
2 to 1	5 to 1	0.33	3.58	3.56	3.53	3.48	3.44	3.43	3.48	3.54	3.57	3.58

[1] See also Table 58.
[2] See also Table 57

CURRENT DATE: 05-19-1998 FILE DATE: 05-15-1998
CURRENT TIME: 15:12:32 FILE NAME: BBOUT2

BASIN B Outlet RCB / Flow Control Wyoone

FHWA CULVERT ANALYSIS
HY-8, VERSION 3.2

CULV	SITE DATA: INLET ELEV. (FT)	OUTLET ELEV. (FT)	CULVERT LENGTH (FT)	BARRELS	SHAPE MATERIAL	SPAN (FT)	RISE (FT)	MANNING n	INLET TYPE
1	1150.10 (350.55m)	1146.00	52.16	3	RCB	10.00	4.00	.012	CONVENTIONAL
2									
3									
4									
5									
6									

SUMMARY OF CULVERT FLOWS (CFS) FILE: BBOUT2 DATE: 05-15-1998

ELEV (FT)	TOTAL	1	2	3	4	5	6	ROADWAY	ITR
1150.10	0	0	0	0	0	0	0	0	1
1151.07	100	100	0	0	0	0	0	0	1
1151.65	200	200	0	0	0	0	0	0	1
1152.13	300	300	0	0	0	0	0	0	1
1152.63	400	400	0	0	0	0	0	0	1
1153.09	500	500	0	0	0	0	0	0	1
1153.54	600	600	0	0	0	0	0	0	1
1153.98	700	700	0	0	0	0	0	0	1
1154.42	800	800	0	0	0	0	0	0	1
1154.88	900	900	0	0	0	0	0	0	1
1155.35	1000	1000	0	0	0	0	0	0	1
1158.00	1470	1470	0	0	0	0	0	OVERTOPPING	

SUMMARY OF ITERATIVE SOLUTION ERRORS FILE: BBOUT2 DATE: 05-15-1998

HEAD ELEV(FT)	HEAD ERROR(FT)	TOTAL FLOW(CFS)	FLOW ERROR(CFS)	% FLOW ERROR
1150.10	0.00	0	0	0.00
1151.07	0.00	100	0	0.00
1151.65	0.00	200	0	0.00
1152.13	0.00	300	0	0.00
1152.63	0.00	400	0	0.00
1153.09	0.00	500	0	0.00
1153.54	0.00	600	0	0.00
1153.98	0.00	700	0	0.00
1154.42	0.00	800	0	0.00
1154.88	0.00	900	0	0.00
1155.35	0.00	1000	0	0.00

<1> TOLERANCE (FT) = 0.010 <2> TOLERANCE (%) = 1.000

BIBOUT 2

TAILWATER

******* REGULAR CHANNEL CROSS SECTION **********

BOTTOM WIDTH (FT)	8.00
SIDE SLOPE H/V (X:1)	2.0
CHANNEL SLOPE V/H (FT/FT)	0.001
MANNING'S N (.01-0.1)	0.013
CHANNEL INVERT ELEVATION (FT)	1146.00
CULVERT NO.1 OUTLET INVERT ELEVATION	1146.00 FT

******* UNIFORM FLOW RATING CURVE FOR DOWNSTREAM CHANNEL

FLOW (CFS)	W.S.E. (FT)	FROUDE NUMBER	VEL. (FPS)	SHEAR (PSF)
0.00	1146.00	0.000	0.00	0.00
100.00	1147.96	0.540	4.29	0.11
200.00	1148.82	0.547	5.21	0.16
300.00	1149.46	0.551	5.81	0.19
400.00	1149.99	0.554	6.28	0.22
500.00	1150.45	0.557	6.66	0.25
600.00	1150.85	0.559	6.98	0.27
700.00	1151.22	0.561	7.27	0.29
800.00	1151.56	0.562	7.52	0.31
900.00	1151.88	0.564	7.76	0.33
1000.00	1152.17	0.565	7.97	0.35

ROADWAY OVERTOPPING DATA

ROADWAY SURFACE	PAVED
EMBANKMENT TOP WIDTH (FT)	36.00
CREST LENGTH (FT)	40.00
OVERTOPPING CREST ELEVATION (FT)	1158.00

BBOUT2

CULVERT # 1

PERFORMANCE CURVE FOR 3 BARREL(S)

Q (cfs)	HWE (ft)	TWE (ft)	ICH (ft)	OCH (ft)	FLOW TYPE	CCE (ft)	FCE (ft)	TCE (ft)	VO (fps)
0	1150.10	1146.00	0.00	-4.10	0-NF	0.00	1150.10	0.00	0.00
100	1151.07	1147.96	0.97	-1.75	6-FF	0.00	0.00	0.00	11.75
200	1151.65	1148.82	1.55	-1.24	6-FF	0.00	0.00	0.00	15.57
300	1152.13	1149.46	2.03	-0.52	6-FF	0.00	0.00	0.00	16.69
400	1152.63	1149.99	2.53	0.11	6-FF	0.00	0.00	0.00	17.70
500	1153.09	1150.45	2.99	0.69	4-FF	0.00	0.00	0.00	4.17
600	1153.54	1150.85	3.44	1.26	4-FF	0.00	0.00	0.00	5.00
700	1153.98	1151.22	3.88	1.81	4-FF	0.00	0.00	0.00	5.83
800	1154.42	1151.56	4.32	2.37	4-FF	0.00	0.00	0.00	6.67
900	1154.88	1151.88	4.78	2.93	4-FF	0.00	0.00	0.00	7.50
1000	1155.35	1152.17	5.25	3.50	4-FF	0.00	0.00	0.00	8.33

El. inlet face invert 1150.10 ft El. outlet invert 1146.00 ft
El. inlet throat invert 0.00 ft El. inlet crest 0.00 ft

***** SITE DATA ***** CULVERT INVERT **********

INLET STATION (FT)	0.00
INLET ELEVATION (FT)	1150.10
OUTLET STATION (FT)	52.00
OUTLET ELEVATION (FT)	1146.00
NUMBER OF BARRELS	3.00
SLOPE (V-FT/H-FT)	0.0788
CULVERT LENGTH ALONG SLOPE (FT)	52.16

***** CULVERT DATA SUMMARY **********

BARREL SHAPE	BOX
BARREL SPAN	10.00 FT
BARREL RISE	4.00 FT
BARREL MATERIAL	CONCRETE
BARREL MANNING'S N	0.012
INLET TYPE	CONVENTIONAL
INLET EDGE AND WALL	1:1 BEVEL (45 DEG. FLARE)
INLET DEPRESSION	NONE

CURRENT DATE: 05-21-1998
CURRENT TIME: 14:18:04

FILE DATE: 05-20-1998
FILE NAME: EQ-RCB

EQ BAS INLET RCB

FHWA CULVERT ANALYSIS
HY-8, VERSION 3.2

CULV	SITE DATA: INLET ELEV. (FT)	OUTLET ELEV. (FT)	CULVERT LENGTH (FT)	BARRELS SHAPE MATERIAL	SPAN (FT)	RISE (FT)	MANNING n	INLET TYPE
1	1141.00	1140.00	90.01	2 RCB	8.00	8.00	.012	CONVENTIONAL
2								
3								
4								
5								
6								

FILE: EQ-RCB CULVERT HEADWATER ELEVATION (FT) DATE: 05-20-1998

DISCHARGE	1	2	3	4	5	6	ROADWAY
0	1150.00	0.00	0.00	0.00	0.00	0.00	1157.00
100	1150.01	0.00	0.00	0.00	0.00	0.00	1158.44
200	1150.05	0.00	0.00	0.00	0.00	0.00	1159.23
300	1150.11	0.00	0.00	0.00	0.00	0.00	1159.91
400	1150.20	0.00	0.00	0.00	0.00	0.00	1160.56
500	1150.32	0.00	0.00	0.00	0.00	0.00	1161.10
600	1150.46	0.00	0.00	0.00	0.00	0.00	1161.61
700	1150.63	0.00	0.00	0.00	0.00	0.00	1162.08
800	1150.82	0.00	0.00	0.00	0.00	0.00	1162.52
900*	1151.04	0.00	0.00	0.00	0.00	0.00	1162.96
1000*	1151.28	0.00	0.00	0.00	0.00	0.00	1163.38

* See HEC-1 INBB & RFBAY

Q inflow to EQ BAS est. to be 1000 cfs when Outfall RCB begins to control @ ≈ 1151.3.

Tailwater level assumed to be @ ≈ 1150.

EQ BAS RCB

CULVERT # 1

PERFORMANCE CURVE FOR 2 BARREL(S)

Q (cfs)	HWE (ft)	TWE (ft)	ICH (ft)	OCH (ft)	FLOW TYPE	CCE (ft)	FCE (ft)	TCE (ft)	VO (fps)
0	1150.00	1150.00	0.00	9.00	0-NF	0.00	1141.00	0.00	0.00
100	1150.01	1150.00	1.58	9.01	4-FF	0.00	0.00	0.00	0.78
200	1150.05	1150.00	2.50	9.05	4-FF	0.00	0.00	0.00	1.56
300	1150.11	1150.00	3.28	9.12	4-FF	0.00	0.00	0.00	2.34
400	1150.20	1150.00	3.98	9.20	4-FF	0.00	0.00	0.00	3.13
500	1150.32	1150.00	4.66	9.32	4-FF	0.00	0.00	0.00	3.91
600	1150.46	1150.00	5.31	9.46	4-FF	0.00	0.00	0.00	4.69
700	1150.63	1150.00	5.93	9.63	4-FF	0.00	0.00	0.00	5.47
800	1150.82	1150.00	6.53	9.82	4-FF	0.00	0.00	0.00	6.25
900	1151.04	1150.00	7.12	10.04	4-FF	0.00	0.00	0.00	7.03
1000	1151.28	1150.00	7.70	10.28	4-FF	0.00	0.00	0.00	7.81

El. inlet face invert 1141.00 ft El. outlet invert 1140.00 ft
El. inlet throat invert 0.00 ft El. inlet crest 0.00 ft

***** SITE DATA ***** CULVERT INVERT **********

INLET STATION (FT)	0.00
INLET ELEVATION (FT)	1141.00
OUTLET STATION (FT)	90.00
OUTLET ELEVATION (FT)	1140.00
NUMBER OF BARRELS	2.00
SLOPE (V-FT/H-FT)	0.0111
CULVERT LENGTH ALONG SLOPE (FT)	90.01

***** CULVERT DATA SUMMARY **********

BARREL SHAPE	BOX
BARREL SPAN	8.00 FT
BARREL RISE	8.00 FT
BARREL MATERIAL	CONCRETE
BARREL MANNING'S N	0.012
INLET TYPE	CONVENTIONAL
INLET EDGE AND WALL	1:1 BEVEL (45 DEG. FLARE)
INLET DEPRESSION	NONE

EQ BAS RCB

TAILWATER

CONSTANT WATER SURFACE ELEVATION
1150.00

ROADWAY OVERTOPPING DATA

ROADWAY SURFACE	GRAVEL
EMBANKMENT TOP WIDTH (FT)	20.00
CREST LENGTH (FT)	20.00
OVERTOPPING CREST ELEVATION (FT)	1157.00

1/2

Santan Phase 2

HDR Computation

Job No.: 00173-160-044

Project: 600-7-502
Subject: Det. Basin B
Task: Volume Calcs

Computed: MLJ Date: 5/18/98
Checked: MY Date: 5/18/98

Notes	High Water Elevation [m]	[ft]		Retention Storage Vol. [m^3]	[ac-ft]		Surface Area [m^2]	[ac]
Top of Berm	352.65	1157.0		612002	496.2		93101	23.0
	352.6	1156.8		607364	492.4		92417	22.8
	352.4	1156.2		588949	477.5		91734	22.7
	352.2	1155.5		570671	462.7		91050	22.5
HWL	352.0	1154.9	1154.5	552529	447.9	440	90366	22.3
~~Weir Elev~~	351.8	1154.2	1153.7	534639	433.4	423	88532	21.9
	351.6	1153.5		516916	419.1		88699	21.9
	351.4	1152.9		499260	404.8		87865	21.7
	351.2	1152.2		481770	390.6		87032	21.5
	351.0	1151.6		464447	376.5		86198	21.3
	350.8	1150.9		447289	362.6		85381	21.1
	350.6	1150.3		430295	348.8		84564	20.9
	350.4	1149.6		413463	335.2		83748	20.7
	350.2	1149.0		396795	321.7		82931	20.5
	350.0	1148.3		380291	308.3		82114	20.3
	349.8	1147.6		363948	295.1		81313	20.1
	349.6	1147.0		347766	281.9		80513	19.9
	349.4	1146.3		331743	268.9		79712	19.7
	349.2	1145.7		315881	256.1		78912	19.5
	349.0	1145.0		300179	243.4		78111	19.3
	348.8	1144.4		284635	230.8		77327	19.1
	348.6	1143.7		269248	218.3		76543	18.9
	348.4	1143.0		254018	205.9		75758	18.7
	348.2	1142.4		238944	193.7		74974	18.5
	348.0	1141.7		224028	181.6		74190	18.3
	347.8	1141.1		209267	169.7		73422	18.1
	347.6	1140.4		194659	157.8		72654	18.0
	347.4	1139.8		180205	146.1		71885	17.8
	347.2	1139.1		165905	134.5		71117	17.6
	347.0	1138.5		151759	123.0		70349	17.4
	346.8	1137.8		137764	111.7		69597	17.2
	346.6	1137.1		123920	100.5		68845	17.0
	346.4	1136.5		110226	89.4		68092	16.8
	346.2	1135.8		96683	78.4		67340	16.6
	346.0	1135.2		83290	67.5		66588	16.5
	345.8	1134.5		70065	56.8		65666	16.2
	345.6	1133.9		57024	46.2		64744	16.0

	345.4	1133.2	44167	35.8	63822	15.8
	345.2	1132.5	31495	25.5	62900	15.5
	345.0	1131.9	19563	15.9	56414	13.9
	344.8	1131.2	10071	8.2	38511	9.5
	344.6	1130.6	3597	2.9	26225	6.5
	344.4	1129.9	487	0.4	4874	1.2
Outlet Elev	344.2	1129.3	0	0.0	0	0.0

Santan Phase 2

HDR Computation

Job No.: 00173-160-044

Project: 600-7-502
Subject: Equal. Basin
Task: Volume Calcs

Computed: MLJ Date: 5/19/98
Checked: VFY Date: 5/19/98

Notes	High Water Elevation [m]	[ft]		Retention Storage Vol. [m^3]	[ac-ft]		Surface Area [m^2]	[ac]
Top of Berm	352.65	1157.0		60276	48.9		15926	3.9
	352.6	1156.8		59480	48.2		15900	3.9
	352.4	1156.2		56338	45.7		15525	3.8
	352.2	1155.5		53270	43.2		15149	3.7
HWL	352.0	1154.9	1154.5	50278	40.8	39	14774	3.7
	351.8	1154.2		47362	38.4		14387	3.6
	351.6	1153.5		44523	36.1		14000	3.5
	351.4	1152.9		41762	33.9		13613	3.4
	351.2	1152.2		39078	31.7		13226	3.3
	351.0	1151.6		36472	29.6		12839	3.2
	350.8	1150.9		33941	27.5		12472	3.1
	350.6	1150.3		31483	25.5		12105	3.0
RCB Outlet	350.4	1149.6	1150.1	29099	23.6	25	11737	2.9
	350.2	1149.0		26788	21.7		11370	2.8
	350.0	1148.3		24551	19.9		11003	2.7
	349.8	1147.6		22385	18.1		10656	2.6
	349.6	1147.0		20288	16.4		10308	2.5
	349.4	1146.3		18261	14.8		9961	2.5
	349.2	1145.7		16304	13.2		9613	2.4
	349.0	1145.0		14416	11.7		9266	2.3
	348.8	1144.4		12596	10.2		8938	2.2
	348.6	1143.7		10841	8.8		8610	2.1
	348.4	1143.0		9152	7.4		8283	2.0
	348.2	1142.4		7528	6.1		7955	2.0
	348.0	1141.7		5970	4.8		7627	1.9
	347.8	1141.1		4481	3.6		7256	1.8
	347.6	1140.4		3067	2.5		6886	1.7
	347.4	1139.8		1727	1.4		6515	1.6
	347.2	1139.1		602	0.5		4738	1.2
Bottom	347.0	1138.5		0	0.0		1280	0.3

1/1

Santan Phase 2

HDR Computation

Job No.: 00173-160-044

Project: 600-7-502
Subject: Box Culvert & Forebay Channel
Task: Volume Calcs

Computed: MLJ Date: 5/19/98
Checked: RY Date: 5/19/98

Box Culvert:	Volume = (7)(10)(7)(230) =	112700	CF
Forebay:	Volume = [(14)(8)+(14)(28)](630) =	317520	CF
Apron:	Volume = [(10)(80)/2](200) =	80000	CF
TOTAL	VOLUME = 112700+31720+80000 =	510220	CF
	=	11.71	ac-ft

1/3

CURRENT DATE: 05-27-1998
CURRENT TIME: 09:09:59

FILE DATE: 05-27-1998
FILE NAME: BASINB24

Equalization Basin to Wetlands Cells

FHWA CULVERT ANALYSIS
HY-8, VERSION 3.2

CULV	SITE DATA: INLET ELEV. (FT)	OUTLET ELEV. (FT)	CULVERT LENGTH (FT)	BARRELS SHAPE MATERIAL	SPAN (FT)	RISE (FT)	MANNING n	INLET TYPE
1	1139.00	1138.00	270.00	1 RCP	2.00	2.00	.012	CONVENTIONAL
2								
3								
4								
5								
6								

SUMMARY OF CULVERT FLOWS (CFS) FILE: BASINB24 DATE: 05-27-1998

ELEV (FT)	TOTAL	1	2	3	4	5	6	ROADWAY	ITR
1142.00	0	0	0	0	0	0	0	0	1
1142.03	2	2	0	0	0	0	0	0	1
1142.11	4	4	0	0	0	0	0	0	1
1142.25	6	6	0	0	0	0	0	0	1
1142.44	8	8	0	0	0	0	0	0	1
1142.68	10	10	0	0	0	0	0	0	1
1142.98	12	12	0	0	0	0	0	0	1
1143.34	14	14	0	0	0	0	0	0	1
1143.75	16	16	0	0	0	0	0	0	1
1144.21	18	18	0	0	0	0	0	0	1
1144.73	20	20	0	0	0	0	0	0	1
1157.00	47	47	0	0	0	0	0	OVERTOPPING	

SUMMARY OF ITERATIVE SOLUTION ERRORS FILE: BASINB24 DATE: 05-27-1998

HEAD ELEV(FT)	HEAD ERROR(FT)	TOTAL FLOW(CFS)	FLOW ERROR(CFS)	% FLOW ERROR
1142.00	0.00	0	0	0.00
1142.03	0.00	2	0	0.00
1142.11	0.00	4	0	0.00
1142.25	0.00	6	0	0.00
1142.44	0.00	8	0	0.00
1142.68	0.00	10	0	0.00
1142.98	0.00	12	0	0.00
1143.34	0.00	14	0	0.00
1143.75	0.00	16	0	0.00
1144.21	0.00	18	0	0.00
1144.73	0.00	20	0	0.00

<1> TOLERANCE (FT) = 0.010 <2> TOLERANCE (%) = 1.000

Equalization Basin to Wetlands Cells

CULVERT # 1

PERFORMANCE CURVE FOR 1 BARREL(S)

Q (cfs)	HWE (ft)	TWE (ft)	ICH (ft)	OCH (ft)	FLOW TYPE	CCE (ft)	FCE (ft)	TCE (ft)	VO (fps)
0	1142.00	1142.00	0.00	3.00	0-NF	0.00	1139.00	0.00	0.00
2	1142.03	1142.00	0.67	3.03	4-FF	0.00	0.00	0.00	0.64
4	1142.11	1142.00	0.97	3.11	4-FF	0.00	0.00	0.00	1.27
6	1142.25	1142.00	1.24	3.25	4-FF	0.00	0.00	0.00	1.91
8	1142.44	1142.00	1.48	3.44	4-FF	0.00	0.00	0.00	2.55
10	1142.68	1142.00	1.70	3.68	4-FF	0.00	0.00	0.00	3.18
12	1142.98	1142.00	1.92	3.98	4-FF	0.00	0.00	0.00	3.82
14	1143.34	1142.00	2.14	4.34	4-FF	0.00	0.00	0.00	4.46
16	1143.75	1142.00	2.38	4.75	4-FF	0.00	0.00	0.00	5.09
18	1144.21	1142.00*	2.64	5.21	4-FF	0.00	0.00	0.00	5.73
20	1144.73	1142.00*	2.94	5.73	4-FF	0.00	0.00	0.00	6.37

El. inlet face invert 1139.00 ft El. outlet invert 1138.00 ft
El. inlet throat invert 0.00 ft El. inlet crest 0.00 ft

***** SITE DATA ***** CULVERT INVERT **********

INLET STATION (FT)	0.00
INLET ELEVATION (FT)	1139.00
OUTLET STATION (FT)	270.00
OUTLET ELEVATION (FT)	1138.00
NUMBER OF BARRELS	1.00
SLOPE (V-FT/H-FT)	0.0037
CULVERT LENGTH ALONG SLOPE (FT)	270.00

***** CULVERT DATA SUMMARY **********

BARREL SHAPE	CIRCULAR
BARREL DIAMETER	2.00 FT
BARREL MATERIAL	CONCRETE
BARREL MANNING'S N	0.012
INLET TYPE	CONVENTIONAL
INLET EDGE AND WALL	SQUARE EDGE WITH HEADWALL
INLET DEPRESSION	NONE

* Tailwater includes ~ 2 feet for Gate Structure Loss.

Equalization Basin to Wettando Cells

TAILWATER

CONSTANT WATER SURFACE ELEVATION
1142.00

ROADWAY OVERTOPPING DATA

ROADWAY SURFACE	GRAVEL
EMBANKMENT TOP WIDTH (FT)	20.00
CREST LENGTH (FT)	100.00
OVERTOPPING CREST ELEVATION (FT)	1157.00

CURRENT DATE: 05-27-1998
CURRENT TIME: 08:49:16

FILE DATE: 05-27-1998
FILE NAME: BASINB54

Basin B 54" Evacuation

FHWA CULVERT ANALYSIS
HY-8, VERSION 3.2

CULV	SITE DATA: INLET ELEV. (FT)	OUTLET ELEV. (FT)	CULVERT LENGTH (FT)	BARRELS	SHAPE MATERIAL	SPAN (FT)	RISE (FT)	MANNING n	INLET TYPE
1	1127.00	1120.00	600.04	1	RCP	4.50	4.50	.012	CONVENTIONAL
2									
3									
4									
5									
6									

SUMMARY OF CULVERT FLOWS (CFS) FILE: BASINB54 DATE: 05-27-1998

ELEV (FT)	TOTAL	1	2	3	4	5	6	ROADWAY	ITR
1148.00	0	0	0	0	0	0	0	0	1
1148.05	15	15	0	0	0	0	0	0	1
1148.20	30	30	0	0	0	0	0	0	1
1148.45	45	45	0	0	0	0	0	0	1
1148.80	60	60	0	0	0	0	0	0	1
1149.26	75	75	0	0	0	0	0	0	1
1149.81	90	90	0	0	0	0	0	0	1
1150.46	105	105	0	0	0	0	0	0	1
1151.22	120	120	0	0	0	0	0	0	1
1152.07	135	135	0	0	0	0	0	0	1
1153.03	150	150	0	0	0	0	0	0	1
1153.70	160	160	0	0	0	0	0	OVERTOPPING	

SUMMARY OF ITERATIVE SOLUTION ERRORS FILE: BASINB54 DATE: 05-27-1998

HEAD ELEV(FT)	HEAD ERROR(FT)	TOTAL FLOW(CFS)	FLOW ERROR(CFS)	% FLOW ERROR
1148.00	0.00	0	0	0.00
1148.05	0.00	15	0	0.00
1148.20	0.00	30	0	0.00
1148.45	0.00	45	0	0.00
1148.80	0.00	60	0	0.00
1149.26	0.00	75	0	0.00
1149.81	0.00	90	0	0.00
1150.46	0.00	105	0	0.00
1151.22	0.00	120	0	0.00
1152.07	0.00	135	0	0.00
1153.03	0.00	150	0	0.00

<1> TOLERANCE (FT) = 0.010 <2> TOLERANCE (%) = 1.000

2/3

Basin B 54" Evacuation

CULVERT # 1

PERFORMANCE CURVE FOR 1 BARREL(S)

Q (cfs)	HWE (ft)	TWE (ft)	ICH (ft)	OCH (ft)	FLOW TYPE	CCE (ft)	FCE (ft)	TCE (ft)	VO (fps)
0	1148.00	1148.00	0.00	21.00	0-NF	0.00	1127.00	0.00	0.00
15	1148.05	1148.00	1.48	21.05	4-FF	0.00	0.00	0.00	0.94
30	1148.20	1148.00	2.15	21.20	4-FF	0.00	0.00	0.00	1.89
45	1148.45	1148.00	2.76	21.45	4-FF	0.00	0.00	0.00	2.83
60	1148.80	1148.00	3.30	21.80	4-FF	0.00	0.00	0.00	3.77
75	1149.26	1148.00	3.78	22.26	4-FF	0.00	0.00	0.00	4.72
90	1149.81	1148.00	4.26	22.81	4-FF	0.00	0.00	0.00	5.66
105	1150.46	1148.00	4.75	23.46	4-FF	0.00	0.00	0.00	6.60
120	1151.22	1148.00	5.28	24.22	4-FF	0.00	0.00	0.00	7.55
135	1152.07	1148.00 *	5.86	25.07	4-FF	0.00	0.00	0.00	8.49
150	1153.03	1148.00	6.51	26.03	4-FF	0.00	0.00	0.00	9.43

El. inlet face invert 1127.00 ft El. outlet invert 1120.00 ft
El. inlet throat invert 0.00 ft El. inlet crest 0.00 ft

***** SITE DATA ***** CULVERT INVERT **********

INLET STATION (FT)	0.00
INLET ELEVATION (FT)	1127.00
OUTLET STATION (FT)	600.00
OUTLET ELEVATION (FT)	1120.00
NUMBER OF BARRELS	1.00
SLOPE (V-FT/H-FT)	0.0117
CULVERT LENGTH ALONG SLOPE (FT)	600.04

***** CULVERT DATA SUMMARY **********

BARREL SHAPE	CIRCULAR
BARREL DIAMETER	4.50 FT
BARREL MATERIAL	CONCRETE
BARREL MANNING'S N	0.012
INLET TYPE	CONVENTIONAL
INLET EDGE AND WALL	SQUARE EDGE WITH HEADWALL
INLET DEPRESSION	NONE

* Wet Well HWL @ 1142 ± (Kyrene Undercrossing Pavmt Elev 1144±)
Minor losses for 2 Gate Structures + MH & Bends ≈ 6'
Minor losses added to TW Elev.

Basin B 54" Evacuation

MY

TAILWATER

CONSTANT WATER SURFACE ELEVATION
1148.00

ROADWAY OVERTOPPING DATA

ROADWAY SURFACE	GRAVEL
EMBANKMENT TOP WIDTH (FT)	20.00
CREST LENGTH (FT)	100.00
OVERTOPPING CREST ELEVATION (FT)	1153.70

(Basin B Wier)

1/3

CURRENT DATE: 06-11-1998 (Discharge) FILE DATE: 5-26-98
CURRENT TIME: 11:11:08 54" Outlet Conduit from P.S. FILE NAME: PSCOND

Hy-8

FHWA CULVERT ANALYSIS
HY-8, VERSION 3.2

CULV	SITE DATA: INLET ELEV. (FT)	OUTLET ELEV. (FT)	CULVERT LENGTH (FT)	CULVERT SHAPE, MATERIAL, INLET: BARRELS	SHAPE MATERIAL	SPAN (FT)	RISE (FT)	MANNING n	INLET TYPE
1	1155.00	1146.00	1260.03	1	RCP	4.50	4.50	.012	CONVENTIONAL
2									
3									
4									
5									
6									

SUMMARY OF CULVERT FLOWS (CFS) FILE: PSCOND DATE: 5-26-98

ELEV (FT)	TOTAL	1	2	3	4	5	6	ROADWAY	ITR
1155.00	0	0	0	0	0	0	0	0	1
1156.74	20	20	0	0	0	0	0	0	1
1157.57	40	40	0	0	0	0	0	0	1
1158.31	60	60	0	0	0	0	0	0	1
1158.95	80	80	0	0	0	0	0	0	1
1159.59	100	100	0	0	0	0	0	0	1
1160.29	120	120	0	0	0	0	0	0	1
1161.08	140	140	0	0	0	0	0	0	1
1161.52	150	150	0	0	0	0	0	0	1
1163.05	180	180	0	0	0	0	0	0	1
1165.01	200	200	0	0	0	0	0	0	1
1166.00	206	206	0	0	0	0	0	OVERTOPPING	

SUMMARY OF ITERATIVE SOLUTION ERRORS FILE: PSCOND DATE: 5-26-98

HEAD ELEV(FT)	HEAD ERROR(FT)	TOTAL FLOW(CFS)	FLOW ERROR(CFS)	% FLOW ERROR
1155.00	0.00	0	0	0.00
1156.74	0.00	20	0	0.00
1157.57	0.00	40	0	0.00
1158.31	0.00	60	0	0.00
1158.95	0.00	80	0	0.00
1159.59	0.00	100	0	0.00
1160.29	0.00	120	0	0.00
1161.08	0.00	140	0	0.00
1161.52	0.00	150	0	0.00
1163.05	0.00	180	0	0.00
1165.01	0.00	200	0	0.00

<1> TOLERANCE (FT) = 0.010 <2> TOLERANCE (%) = 1.000

54" Outlet Conduit

CULVERT # 1

PERFORMANCE CURVE FOR 1 BARREL(S)

Q (cfs)	HWE (ft)	TWE (ft)	ICH (ft)	OCH (ft)	FLOW TYPE	CCE (ft)	FCE (ft)	TCE (ft)	VO (fps)
0	1155.00	1146.00	0.00	-9.00	0-NF	0.00	1155.00	0.00	0.00
20	1156.74	1146.00	1.74	-5.97	6-FF	0.00	0.00	0.00	7.72
40	1157.57	1146.00	2.57	-5.25	6-FF	0.00	0.00	0.00	9.16
60	1158.31	1146.00	3.31	-4.31	6-FF	0.00	0.00	0.00	9.87
80	1158.95	1146.00	3.95	-3.09	6-FF	0.00	0.00	0.00	11.03
100	1159.59	1146.00	4.59	-1.60	6-FF	0.00	0.00	0.00	11.64
120	1160.29	1146.00	5.29	0.16	6-FF	0.00	0.00	0.00	12.14
140	1161.08	1146.00	6.08	2.20	6-FF	0.00	0.00	0.00	12.53
150	1161.52	1146.00	6.52	3.33	6-FF	0.00	0.00	0.00	12.60
180	1163.05	1146.00	8.05	7.11	6-FF	0.00	0.00	0.00	12.89
200	1165.01	1146.00	9.24	10.01	7-FF	0.00	0.00	0.00	13.32

El. inlet face invert 1155.00 ft El. outlet invert 1146.00 ft
El. inlet throat invert 0.00 ft El. inlet crest 0.00 ft

***** SITE DATA ***** CULVERT INVERT **********

INLET STATION (FT)	0.00
INLET ELEVATION (FT)	1155.00
OUTLET STATION (FT)	1260.00
OUTLET ELEVATION (FT)	1146.00
NUMBER OF BARRELS	1.00
SLOPE (V-FT/H-FT)	0.0071
CULVERT LENGTH ALONG SLOPE (FT)	1260.03

***** CULVERT DATA SUMMARY **********

BARREL SHAPE	CIRCULAR
BARREL DIAMETER	4.50 FT
BARREL MATERIAL	CONCRETE
BARREL MANNING'S N	0.012
INLET TYPE	CONVENTIONAL
INLET EDGE AND WALL	SQUARE EDGE WITH HEADWALL
INLET DEPRESSION	NONE

Pump Station Grade @ 1162 ±
Design Q = 150 cfs
Max Q = 200 cfs

54" Outlet Conduit

TAILWATER

CONSTANT WATER SURFACE ELEVATION
1146.00

ROADWAY OVERTOPPING DATA

ROADWAY SURFACE	PAVED
EMBANKMENT TOP WIDTH (FT)	50.00
CREST LENGTH (FT)	40.00
OVERTOPPING CREST ELEVATION (FT)	1166.00

Set top of discharge box @ 1166 ±.

```
1****************************************                    ****************************************
 *                                      *                    *                                      *
 *   FLOOD HYDROGRAPH PACKAGE  (HEC-1)  *                    *    U.S. ARMY CORPS OF ENGINEERS      *
 *             JUN 09 1992              *                    *    HYDROLOGIC ENGINEERING CENTER     *
 *           VERSION 4.0.3E             *                    *          609 SECOND STREET           *
 *                                      *                    *       DAVIS, CALIFORNIA 95616        *
 *  RUN DATE  05/26/98  TIME  16:55:28  *                    *           (916) 551-1748             *
 *                                      *                    *                                      *
 ****************************************                    ****************************************


                                        X     X  XXXXXXX   XXXXX          X
                                        X     X  X        X     X        XX
                                        X     X  X        X              X
                                        XXXXXXX  XXXX     X        XXXXX  X
                                        X     X  X        X              X
                                        X     X  X        X     X        X
                                        X     X  XXXXXXX   XXXXX        XXX


THIS PROGRAM REPLACES ALL PREVIOUS VERSIONS OF HEC-1 KNOWN AS HEC1 (JAN 73), HEC1GS, HEC1DB, AND HEC1KW.

THE DEFINITIONS OF VARIABLES -RTIMP- AND -RTIOR- HAVE CHANGED FROM THOSE USED WITH THE 1973-STYLE INPUT STRUCTURE.
THE DEFINITION OF -AMSKK- ON RM-CARD WAS CHANGED WITH REVISIONS DATED 28 SEP 81. THIS IS THE FORTRAN77 VERSION
NEW OPTIONS: DAMBREAK OUTFLOW SUBMERGENCE , SINGLE EVENT DAMAGE CALCULATION, DSS:WRITE STAGE FREQUENCY,
DSS:READ TIME SERIES AT DESIRED CALCULATION INTERVAL   LOSS RATE:GREEN AND AMPT INFILTRATION
KINEMATIC WAVE: NEW FINITE DIFFERENCE ALGORITHM

1                                          HEC-1 INPUT                                          PAGE  1

      LINE          ID.......1.......2.......3.......4.......5.......6.......7.......8.......9......10

        1           ID        FN: SVRD05~2.DAT  May 1998       ADAPTED FROM SEVRDS.DAT (HDR 4/97)
        2           ID        This model has two revisions from the previous model.
        3           ID        1. Revised BASIN B and Outlet Channel routings to accomodate P-MIP
        4           ID           project overflows from the Gila Drain as described below.
        5           ID        2. Revised Basin 15 from detention to retention so that flows will not
        6           ID           bypassed to the SEVRDS Channel during the event. See more below.
        7           ID        ***********************************************************************
        8           ID        HISTORY THIS MODEL:   This model is a modification of ALT2c.DAT
        9           ID        developed by HDR for the Alternative Study for SEVRDS by HDR in
       10           ID        June 1995. SMF48TH.DAT(PRICE5) on the West side of I-10 was included.
       11           ID        GILA1B.DAT(Gila Drain Floodway Model) was also included in this model.
       12           ID        ALT2c was a composite of HEC1 models from Price GEC Gila Drain Alternati
       13           ID        Drainage Report,HDR,Feb 1993(Price/Santan/Gila Drain GILADRY.DAT model),
       14           ID        South Mountain Freeway Concept Drainage Report, HDR, Feb 1993,(Segment V
       15           ID        PRICE5.DAT model modified to SMF48th.DAT described below), and Gila
       16           ID        Drain Floodway Master Plan Report, Feb 1993(GILA1B.DAT model).  The
       17           ID        original model was developed for the Price Freeway drainage system as
       18           ID        reported in "Hydrology Study: Price Expressway", ADOT Contract 88-24,
       19           ID        Dec. 1989.  The model criteria is provided in that report.  The basic
       20           ID        model has not changed since 1989. The model continues to be the model
       21           ID        record because the model was used to design the upper part of the
       22           ID        SEVRDS/Santan Channel system on Price Freeway for the Galveston to Frye
       23           ID        Interim Project which included construction of Basin G and the outlet to
       24           ID        the Santan Channel.
       25           ID        ***********************************************************************
       26           ID        BASIN B DESIGN. Basin B was configured as a bypass basin in 1993. With
       27           ID        the formation of SEVRDS, the Basin was reconfigured as a multi-celled
       28           ID        basin with first flush containment cell, a treatment cell and a large
       29           ID        retention cell to capture flows above 800 cfs.("Initial Drainage Report
       30           ID        Santan Freeway:56th St to Price Rd and Gila Drain Floodway to Basin B,"
```

```
ID        Wood Patel & Assoc., Sept. 12, 1996.)
ID        HDR prepared a detailed design of the Basin B complex in Feb. 1997.
ID        The size of Basin B was increased from 385(9/96) to 450 af to limit bypa
ID        flows to 900 cfs. This operation maximized the available storage on-site
ID        and required moving the outlet channel to the west side of the Gila
ID        Drain.  This most recent model further optimized storage on site in
ID        in Basin B to limit bypass flows to 800 cfs to allow Gila Drain
ID        flows of up to 150 cfs to enter the outfall channel at the GRIC boundary
ID
ID        Basin B site has three basins: 1.First flush equalization/sedimentation
ID        basin stores first 39 ac-ft of inflow into system.  2. A two-celled Watr
ID        Quality Basin treats the first-flush post-event. This basin is not
ID        included in the model. 3. An off-line retention basin, Basin B, has a
ID        capacity of 450 ac-ft.  Operation: The first flush is conveyed in the
ID        Forebay Channel to Eq. Basin. Additional flow up to 804 cfs is bypassed
ID        thru 3-10x4 control RCB to Outfall Chan.  At about 600 cfs, flow begins
ID        to spill over Basin B weir.  At 100-yr peak of ~~2895~~ cfs, 804 cfs is   2885
ID        discharging to RCB and ~~2091~~ cfs is overflowing 1000' weir into Basin B   2087
ID        ************************************************************************
ID        SMF48th.DAT Model of the area west of I-10 was significantly
ID        changed in Feb. 1996 for the 48th St. ID study for Phoenix, including
ID        the reconfiguration of Basin 15 as a retention basin as mentioned above.
ID        A future connection of the 48th St.-Basin 15 to SEVRDS would be a pipe
ID        to dewater Basin 15 post-event.  Basin 15 will not increase design
ID        discharge of the SEVRDS Channel during the event.
1                                   HEC-1 INPUT                                    PAGE  2

LINE      ID.......1.......2.......3.......4.......5.......6.......7.......8.......9......10

ID        ************************************************************************
ID
ID
ID        INITIAL ABSTRACTION USED TO REPRESENT DEVELOPMENT RETENTION PROVIDED
ID        100 YEAR - 24 HOUR STORM
ID        HDR - PHOENIX
ID        FILENAME: SVRD0598.DAT 10/97 Version
IT       5                    1000
IO       5
IN      12                     310
*DIAGRAM

KK    bash
KM        OFFSITE INFLOW INTO BASIN H AT PRICE AND PECOS INTERCHANGE FROM E
BA    6.76
QI    0.00    0.00    0.00    0.00    0.00    0.00    0.00    0.00    0.00
QI    0.00    0.00    0.00    0.00    0.00    0.00    0.00    0.00    0.00
QI    0.00    0.00    0.00    0.00    0.00    0.00    0.00    0.00    0.00
QI    0.00    0.00    0.00    0.00    0.00    0.00    0.00    0.00    0.00
QI    0.00    0.00    0.00    0.00    0.00    0.00    0.01    0.04    0.10
QI    0.39    0.64    0.98    1.43    2.00    2.72    3.65    4.88    6.57
QI   17.35   40.17   84.15  157.71  255.02  413.77  498.78  738.94  766.73
QI  651.16  578.19  513.98  461.77  419.16  385.17  357.03  332.76  310.86
QI  273.04  257.39  243.47  230.94  219.41  208.60  198.28  188.77  180.16
QI  266.57  267.73  269.41  275.07  284.98  292.73  296.44  298.71  300.62
QI  305.48  308.84  312.78  317.34  322.46  327.76  332.81  337.94  343.13
QI  352.29  356.32  360.03  363.42  366.42  368.99  371.12  372.80  374.07
QI  375.45  375.48  374.63  372.22  368.09  362.92  357.28  351.35  345.22
QI  333.55  328.09  322.75  317.35  311.81  306.05  300.07  293.86  287.41
QI  273.87  266.79  259.39  251.92  244.89  238.17  231.52  225.00  218.58
QI  206.10  200.05  194.15  188.41  182.85  177.47  172.30  167.36  162.81
QI  156.68  155.31  154.12  152.82  151.49  150.11  148.70  147.25  145.78
QI  142.82  141.38  139.94  138.43  136.93  135.42  133.94  132.46  131.00
QI  128.13  126.72  125.34  123.98  122.65  121.34  120.07  118.96  118.33
QI  118.07  118.01  117.94  117.88  117.82  117.76  117.70  117.64  117.57
QI  117.44  117.38  117.32  117.25  117.19  117.12  117.05  116.99  116.92
QI  116.79  116.72  116.65  116.58  116.51  116.44  116.37  116.30  116.23
QI  116.09  116.02  115.95  115.88  115.81  115.74  115.67  115.60  115.53
```

```
 92          QI  115.38  115.31  115.24  115.17  115.09  114.99  114.83  114.61  114.38
 93          QI  113.91  113.68  113.45  113.22  112.99   57.77   57.54   57.32   57.09
 94          QI   56.65   56.43   56.21   55.99   55.77   55.56   55.34   55.12   54.91
 95          QI   54.49   54.28   54.07   53.86   53.65   53.44   53.24   53.03   52.83
 96          QI   52.43   52.23   52.03   51.83   51.63   51.43   51.24   51.04   50.85
 97          QI   50.45   50.24   50.02   49.79   49.55   49.31   49.06   48.80   48.54
 98          QI   48.00   47.72   47.44   47.16   46.88   46.59   46.30   46.01   45.73
             *
 99          IN      12                      310

100          KK  CHNDLR
101          KM        Pumped outflow from Chandler Basins (Galveston, Arrowhead and Denv
102          BA   0.001
103          QI    0.00    0.00    0.00    0.00    0.00    0.00    0.00    0.00    0.00
104          QI    0.00    0.00    0.00    0.00    0.00    0.00    0.00    0.00    0.00
105          QI    0.00    0.00    0.00    0.00    0.00    0.00    0.00    0.00    0.00
106          QI    0.00    0.00    0.00    0.00    0.00    0.00    0.00    0.00    0.00
1                                          HEC-1 INPUT                                                    PAGE  3

LINE         ID.......1.......2.......3.......4.......5.......6.......7.......8.......9......10

107          QI    0.00    0.00    0.00    0.00    0.00    0.00    0.00    0.00    0.00
108          QI    0.00    0.00    0.00    0.00    0.00    0.00    0.00    0.00    0.00
109          QI    0.00    0.00    0.00    0.00    0.00   100.0   100.0   100.0   100.0
110          QI   100.0   100.0   100.0   100.0   100.0   100.0   100.0   100.0   100.
111          QI   100.0   100.0   100.0   100.0   100.0   100.0   100.0   100.0   100.0
112          QI   100.0   100.0   100.0   100.0   100.0   100.0   100.0   100.0   100.0
113          QI   100.0   100.0   100.0   100.0   100.0   100.0   100.0   100.0   100.0
114          QI   100.0   100.0   100.0   100.0   100.0   100.0   100.0   100.0   100.0
115          QI   100.0   100.0   100.0   100.0   100.0   100.0   100.0   100.0   100.0
116          QI   100.0   100.0   100.0   100.0   100.0   100.0   100.0   100.0   100.0
117          QI   100.0   100.0   100.0   100.0   100.0   100.0   100.0   100.0   100.0
118          QI   100.0   100.0   100.0   100.0   100.0   100.0   100.0   100.0   100.0
119          QI   100.0   100.0   100.0   100.0   100.0   100.0   100.0   100.0   100.0
120          QI   100.0   100.0   100.0   100.0   100.0   100.0   100.0   100.0   100.0
121          QI   100.0   100.0   100.0   100.0   100.0   100.0   100.0   100.0   100.0
122          QI   100.0   100.0   100.0   100.0   100.0   100.0   100.0   100.0   100.0
123          QI   100.0   100.0   100.0   100.0   100.0   100.0   100.0   100.0   100.0
124          QI   100.0   100.0   100.0   100.0   100.0   100.0   100.0   100.0   100.0
125          QI   100.0   100.0   100.0   100.0   100.0   100.0   100.0   100.0   100.0
126          QI   100.0   100.0   100.0   100.0   100.0   100.0   100.0   100.0   100.0
127          QI   100.0   100.0   100.0   100.0   100.0    0.00    0.00    0.00    0.00
128          QI    0.00    0.00    0.00    0.00    0.00    0.00    0.00    0.00    0.00
129          QI    0.00    0.00    0.00    0.00    0.00    0.00    0.00    0.00    0.00
130          QI    0.00    0.00    0.00    0.00    0.00    0.00    0.00    0.00    0.00
131          QI    0.00    0.00    0.00    0.00    0.00    0.00    0.00    0.00    0.00
132          QI    0.00    0.00    0.00    0.00    0.00    0.00    0.00    0.00    0.00
133          QI    0.00    0.00    0.00    0.00    0.00    0.00    0.00    0.00    0.00
             *

134          KK  cchand
135          KM        Combine flow from regional basins with offsite flows at old basin
136          HC       2
             *
137          IN       5                      300

138          KK  interchange inflow
139          KM        ONSITE DRAINAGE/STORAGE ANALYSIS -50 YEAR 24 HOUR STORM
140          KM        USE OUTFLOW HYDROGRAPH FROM THE PRICE/SANTAN INTERCHANGE
141          BA    0.16
142          QI    0.00    0.00    0.00    0.00    0.00    0.00    0.00    0.00    0.00
143          QI    0.00    0.00    0.00    0.00    0.00    0.00    0.00    0.00    0.00
144          QI    0.00    0.00    0.00    0.00    0.00    0.00    0.00    0.00    0.00
145          QI    0.00    0.00    0.00    0.00    0.00    0.00    0.00    0.00    0.00
146          QI    0.00    0.00    0.00    0.00    0.00    0.00    0.00    0.00    0.00
147          QI    0.00    0.00    0.00    0.00    0.00    0.00    0.00    0.00    0.00
148          QI    0.00    0.00    0.00    0.00    0.00    0.00    0.00    0.00    0.00
```

```
 149        QI    0.00    0.00    0.00    0.00    0.00    0.00    0.00    0.00    0.00
 150        QI    0.00    0.00    0.00    0.00    0.00    0.00    0.00    0.00    0.00
 151        QI    0.00    0.00    0.00    0.00    0.00    0.00    0.00    0.00    0.00    0.
 152        QI    0.00    0.00    0.00    0.00    0.00    0.00    0.00    0.00    0.00    0.
 153        QI    0.00    0.00    0.00    0.00    0.00    0.00    0.00    0.00    0.00    0.
 154        QI    0.00    0.00    0.00    0.00    0.00    0.00    0.00    0.00    0.00    0.
 155        QI    0.00    0.00    0.00    0.00    0.00    0.00   40.00   40.00   40.00    0.
 156        QI    0.00    0.00    0.00   40.00  120.00  120.00  200.00  200.00  200.00  200.
 157        QI  200.00  200.00  200.00  200.00  200.00  200.00    0.00    0.00    0.00    0.
1                                         HEC-1 INPUT                                          PAGE  4

LINE        ID.......1.......2.......3.......4.......5.......6.......7.......8.......9......10

 158        QI    0.00    0.00   40.00   40.00   40.00    0.00    0.00    0.00    0.00    0.
 159        QI    0.00    0.00    0.00    0.00   40.00   40.00   40.00    0.00    0.00    0.
 160        QI    0.00    0.00    0.00    0.00    0.00    0.00    0.00    0.00    0.00    0.
 161        QI   40.00   40.00    0.00    0.00    0.00    0.00    0.00    0.00    0.00    0.
 162        QI    0.00    0.00    0.00    0.00    0.00    0.00    0.00    0.00    0.00    0.
 163        QI    0.00   40.00   40.00    0.00    0.00    0.00    0.00    0.00    0.00    0.
 164        QI    0.00    0.00    0.00    0.00    0.00    0.00    0.00    0.00    0.00    0.
 165        QI    0.00    0.00    0.00    0.00    0.00    0.00    0.00    0.00    0.00    0.
 166        QI    0.00    0.00    0.00    0.00    0.00    0.00    0.00    0.00    0.00    0.
 167        QI    0.00    0.00    0.00    0.00    0.00    0.00    0.00    0.00    0.00    0.
 168        QI    0.00    0.00    0.00    0.00    0.00    0.00    0.00    0.00    0.00    0.
 169        QI    0.00    0.00    0.00    0.00    0.00    0.00    0.00    0.00    0.00    0.
 170        QI    0.00    0.00    0.00   40.00   40.00    0.00    0.00    0.00    0.00    0.
 171        QI    0.00    0.00    0.00    0.00    0.00    0.00    0.00    0.00    0.00    0.
            *

 172        KK   addTI
 173        KM        Combine onsite p.s. outflow to offsite runoff from east
 174        HC       2
 175        IN      12                    310

 176        KK    basg
 177        KM         INFLOW INTO PRICE BASIN G FROM EAST
 178        BA    4.37
 179        QI    0.00    0.00    0.00    0.00    0.00    0.00    0.00    0.00    0.00    0.
 180        QI    0.00    0.00    0.00    0.00    0.00    0.00    0.00    0.00    0.00    0.
 181        QI    0.00    0.00    0.00    0.00    0.00    0.00    0.00    0.00    0.00    0.
 182        QI    0.00    0.00    0.00    0.00    0.00    0.00    0.00    0.00    0.00    0.
 183        QI    0.00    0.00    0.00    0.00    0.00    0.00    0.00    0.00    0.00    0.
 184        QI    0.00    0.00    0.00    0.00    0.00    0.00    0.01    0.04    0.17    0.
 185        QI    4.27   23.63   65.05  129.91  189.65  223.82  228.38  209.70  175.27  397.
 186        QI  954.28  905.32  843.40  750.42  650.70  561.76  486.59  424.50  372.86  329.
 187        QI  293.55  262.86  236.31  213.14  192.75  174.77  159.23  145.96  134.73  125.
 188        QI  116.85  109.70  103.63   98.58   94.39   90.95   88.07   85.64   83.62   82.
 189        QI   80.98   80.17   79.47   78.77   78.01   77.18   76.25   75.24   74.12   72.
 190        QI   71.75   70.55   69.36   68.18   67.03   65.90   64.80   63.73   62.69   61.
 191        QI   60.70   59.62   58.31   56.55   54.32   51.67   48.71   45.61   42.47   39.
 192        QI   35.68   32.14   28.66   25.32   22.21   19.38   16.87   14.65   12.72   11.
 193        QI    9.58    8.32    7.25    6.33    5.55    4.90    4.32    3.81    3.37    2.
 194        QI    2.60    2.32    2.07    1.85    1.66    1.48    1.33    1.20    1.08    0.
 195        QI    0.88    0.80    0.72    0.65    0.59    0.54    0.49    0.45    0.41    0.
 196        QI    0.34    0.31    0.28    0.26    0.24    0.22    0.20    0.19    0.17    0.
 197        QI    0.14    0.13    0.12    0.11    0.11    0.10    0.09    0.08    0.08    0.
 198        QI    0.07    0.06    0.06    0.05    0.05    0.05    0.04    0.04    0.04    0.
 199        QI    0.03    0.03    0.03    0.03    0.02    0.02    0.02    0.02    0.02    0.
 200        QI    0.02    0.02    0.01    0.01    0.01    0.01    0.01    0.01    0.01    0.
 201        QI    0.01    0.01    0.01    0.01    0.01    0.01    0.01    0.01    0.01    0.
 202        QI    0.01    0.01    0.01    0.00    0.00    0.00    0.00    0.00    0.00    0.
 203        QI    0.00    0.00    0.00    0.00    0.00    0.00    0.00    0.00    0.00    0.
 204        QI    0.00    0.00    0.00    0.00    0.00    0.00    0.00    0.00    0.00    0.
 205        QI    0.00    0.00    0.00    0.00    0.00    0.00    0.00    0.00    0.00    0.
 206        QI    0.00    0.00    0.00    0.00    0.00    0.00    0.00    0.00    0.00    0.
 207        QI    0.00    0.00    0.00    0.00    0.00    0.00    0.00    0.00    0.00    0.
 208        QI    0.00    0.00    0.00    0.00    0.00    0.00    0.00    0.00    0.00    0.
```

```
 209          QI    0.00    0.00    0.00    0.00    0.00    0.00    0.00    0.00    0.00    0.
              *
1                                          HEC-1 INPUT                                          PAGE  5

LINE          ID.......1.......2.......3.......4.......5.......6.......7.......8.......9......10

 210          KK   rbasg
 211          KM        ROUTE OFFSITE FLOW INTO FROM EAST OF REGIONAL BASIN G
 212          KM        72 INCH GRAVITY LINE OUTFLOW TO Price/Pecos TI down WFR
 213          RS       1    ELEV     0.0
 214          SV     0.0    19.1    75.2    98.2   161.2
 215          SE    1174    1176    1179    1180    1183
 216          SQ     0.0      45     155     180     245
              *
              *

 217          KK  rtbasg  90-inch to 96-inch basin G drain
 218          RK    6301  .00060    .012            circ     7.5
              *

 219          KK  cinterchange
 220          KM        COMBINE ONSITE and offsite FLOWS TO TI and from Basin G.
 221          KM        Combined discharge to outfall to Santan collector channel to west.
 222          HC       2

 223          KK  MCSWL2
 224          KM        CHANDLER - AGRICULTURAL (PART SECTION 36)
 225          KM        COMPUTE RUNOFF HYDROGRAPH FOR AGRICULTURAL AREA
 226          PH       1   18.38    0.71    1.39    2.44    2.66    2.81    3.11    3.33    3.70
 227          BA  0.1550
 228          LS     1.5      83
 229          UD    0.88

 230          KK   cbash
 231          KM        COMBINE BASIN H OUTFLOW WITH LOCAL DRAINAGE AREA
 232          HC       2

 233          KK     RT1
 234          KM        ROUTE MCSWL2 HYDROGRAPH TO MCSWL3 CONFLUENCE
 235          RK    1600  .00200   0.016            TRAP     0.0    25.0

 236          KK  MCSWL3
 237          KM        CHANDLER - AGRICULTURAL  (PART SECTION 36)
 238          KM        COMPUTE RUNOFF HYDROGRAPH FOR AGRICULTURAL AREA
 239          BA  0.1700
 240          LS     1.5      83
 241          UD    0.91

 242          KK   COMB1
 243          KM        COMBINE MCSWL3 - AT HALF-MILE POINT OF SECTION 36
 244          KM        THIS COMBINE FOR INFO. ONLY, SHOULD BE XX CFS AT THIS POINT
 245          HC       2

 246          KK  SECT25
 247          KM       CHANDLER
 248          KM       COMPUTE RUNOFF FOR SECTION 25
 249          PH       1   18.38    0.71    1.39    2.44    2.66    2.81    3.11    3.33    3.70
 250          BA    1.00
 251          LS    1.81      84
 252          UD    0.91
1                                          HEC-1 INPUT                                          PAGE  6

LINE          ID.......1.......2.......3.......4.......5.......6.......7.......8.......9......10

 253          KK     RT1
```

```
254          KM       ROUTE SECTION 25 HYDROGRAPH TO OUTLET-A(OLD) - SW CORNER SECT. 36
255          RK    4400  0.0011   0.016            TRAP     0.0    25.0

256          KK  SECT36
257          KM       CHANDLER
258          KM       COMPUTE RUNOFF HYDROGRAPH FOR remainder of SECTION 36
259          KM       This area reduced 0.32 to account for areas MCSLW2 and MCSLW3, areas
260          KM       calculated separately in original analysis - now included in flow logic.
261          BA    0.51
262          LS    1.95      84
263          UD    0.94

264          KK  SECT36
265          KM       COMBINE RT1 - SECT36 HYDROGRAPHS TO GIVE HYDROGRAPH AT SW COR SECT. 36
266          HC       3
267          IN       5                    300

268          KK  mcclintock
269          KM        ONSITE DRAINAGE/STORAGE ANALYSIS 50 YEAR 24 HOUR STORM
270          KM        USE PUMP STATION 'OUTFLOW' HYDROGRAPH FROM MCCLIN4.DAT ONSITE FILE
271          KM        PUMP STATION DESIGN Q IS 200 CFS.
272          BA    0.11
273          QI    0.00     0.00     0.00     0.00     0.00     0.00     0.00     0.00     0.00     0.00
274          QI    0.00     0.00     0.00     0.00     0.00     0.00     0.00     0.00     0.00     0.00
275          QI    0.00     0.00     0.00     0.00     0.00     0.00     0.00     0.00     0.00     0.00
276          QI    0.00     0.00     0.00     0.00     0.00     0.00     0.00     0.00     0.00     0.00
277          QI    0.00     0.00     0.00     0.00     0.00     0.00     0.00     0.00     0.00     0.00
278          QI    0.00     0.00     0.00     0.00     0.00     0.00     0.00     0.00     0.00     0.00
279          QI    0.00     0.00     0.00     0.00     0.00     0.00     0.00     0.00     0.00     0.00
280          QI    0.00     0.00     0.00     0.00     0.00     0.00     0.00     0.00     0.00     0.00
281          QI    0.00     0.00     0.00     0.00     0.00     0.00     0.00     0.00     0.00     0.00
282          QI    0.00     0.00     0.00     0.00     0.00     0.00     0.00     0.00     0.00     0.00
283          QI    0.00     0.00     0.00     0.00     0.00     0.00     0.00     0.00     0.00     0.00
284          QI    0.00     0.00     0.00     0.00     0.00     0.00     0.00     0.00     0.00     0.00
285          QI    0.00     0.00     0.00     0.00     0.00     0.00    40.00     0.00     0.00     0.00
286          QI    0.00     0.00     0.00     0.00    40.00     0.00     0.00     0.00     0.00     0.00
287          QI   40.00    40.00     0.00   120.00     0.00   200.00   200.00   200.00   200.00   200.00
288          QI  200.00   200.00     0.00     0.00   120.00     0.00     0.00     0.00    40.00     0.00
289          QI    0.00     0.00    40.00     0.00     0.00     0.00     0.00    40.00     0.00     0.00
290          QI    0.00     0.00    40.00     0.00     0.00     0.00     0.00     0.00     0.00    40.00
291          QI    0.00     0.00     0.00     0.00     0.00    40.00     0.00     0.00     0.00     0.00
292          QI    0.00     0.00     0.00    40.00     0.00     0.00     0.00     0.00     0.00     0.00
293          QI    0.00     0.00    40.00     0.00     0.00     0.00     0.00     0.00     0.00     0.00
294          QI    0.00     0.00    40.00     0.00     0.00     0.00     0.00     0.00     0.00     0.00
295          QI    0.00     0.00     0.00     0.00     0.00     0.00     0.00     0.00     0.00     0.00
296          QI   40.00     0.00     0.00     0.00     0.00     0.00     0.00     0.00     0.00     0.00
297          QI    0.00     0.00     0.00     0.00     0.00     0.00     0.00     0.00     0.00     0.00
298          QI    0.00     0.00     0.00     0.00     0.00     0.00     0.00     0.00     0.00     0.00
299          QI    0.00     0.00     0.00     0.00     0.00     0.00     0.00     0.00    40.00     0.00
300          QI    0.00     0.00     0.00     0.00     0.00     0.00     0.00     0.00     0.00     0.00
301          QI    0.00     0.00     0.00     0.00     0.00     0.00     0.00     0.00     0.00     0.00
302          QI    0.00     0.00     0.00     0.00     0.00     0.00     0.00     0.00     0.00     0.00
1                                            HEC-1 INPUT                                                    PAGE  7

LINE         ID.......1.......2.......3.......4.......5.......6.......7.......8.......9......10

303          KK   cmcln
304          HC       2

305          KK  RT2536
306          KM       ROUTE TO MID-SECTION POINT OF SECT. 35
307          RK    2600    .008    .016            TRAP     9.5       2

308          KK  RUSWL1
309          KM        CHANDLER - COMMERCIAL (PART SECTION 35)
310          KM        COMPUTE RUNOFF HYDROGRAPH FOR COMMERCIAL AREA
```

```
311          BA  0.2145
312          LS     3.0      92
313          UD    0.45

314          KK     RT1
315          KM        ROUTE RUSWL1 HYDROGRAPH TO RUSWL3 CONFLUENCE
316          RK    1200  .00330   0.016            TRAP     0.0    25.0

317          KK  RUSWL2
318          KM        CHANDLER - RESIDENTIAL - 0.16 (OLD) PART SECTION 35
319          KM        COMPUTE RUNOFF HYDROGRAPH FOR RESIDENTIAL AREA
320          BA  0.0933
321          LS     2.9      84
322          UD    0.51

323          KK     RT2
324          KM .      ROUTE RUSWL2 HYDROGRAPH TO RUSWL3 CONFLUENCE
325          RK    1800  .00330   0.016            TRAP     0.0    25.0

326          KK  RUSWL3
327          KM        CHANDLER - AGRICULTURAL  (PART SECTION 35)
328          KM        COMPUTE RUNOFF HYDROGRAPH FOR AGRICULTURAL AREA
329          BA  0.0990
330          LS     1.5      83
331          UD    0.57

332          KK   COMB1
333          HC       4

334          KK     RT3
335          KM        ROUTE COMB1 HYDROGRAPH TO SW COR. SECT. 35 (PLUS 1000 FT. WEST)
336          RK    3600  .00800   0.016            TRAP     9.5     2.0

337          KK  RUSWL4
338          KM        CHANDLER - RESIDENTIAL - 0.16 (PART SECTION 34 AND 35)
339          KM        COMPUTE RUNOFF HYDROGRAPH FOR RESIDENTIAL AREA
340          BA   .1638
341          LS    2.90      84
342          UD    0.48
```

1 HEC-1 INPUT PAGE 8

```
LINE         ID.......1.......2.......3.......4.......5.......6.......7.......8.......9......10

343          KK  RUSWL5
344          KM        CHANDLER - OPEN FIELD  (PART SECTION 34 AND 35)
345          KM        COMPUTE RUNOFF HYDROGRAPH FOR OPEN FIELD
346          BA  0.0890
347          LS    1.00      83
348          UD    0.39

349          KK     RT4
350          KM        ROUTE RUSWL5 HYDROGRAPH TO OUTLET
351          RK    1000  .00330   0.016            TRAP     0.0    25.0

352          KK  RUSWL6
353          KM        CHANDLER - RESIDENTIAL - 0.16  (PART SECTION 34 AND 35)
354          KM        COMPUTE RUNOFF HYDROGRAPH FOR RESIDENTIAL AREA
355          BA  0.1464
356          LS     2.9      84
357          UD    0.34

358          KK   COMB2
359          HC       3

360          KK     RT5
361          KM        ROUTE COMB2 HYDROGRAPH TO OUTLET
```

```
 362          RK    1400  .00330   0.016            TRAP     0.0    25.0

 363          KK  RUSWL7
 364          KM        CHANDLER - RESIDENTIAL - 0.16  (PART SECTION 34 AND 35)
 365          KM        COMPUTE RUNOFF HYDROGRAPH FOR RESIDENTIAL AREA
 366          BA   .1281
 367          LS    2.90      84
 368          UD    0.34

 369          KK  RUSWL8
 370          KM        CHANDLER - PARK/SCHOOL (PART SECTION 34 AND 35)
 371          KM        COMPUTE RUNOFF HYDROGRAPH FOR PARK/SCHOOL
 372          BA  0.0628
 373          LS       0      64
 374          UD    0.22

 375          KK  RUSWL9
 376          KM        CHANDLER - AGRICULTURAL  (PART SECTION 34 AND 35)
 377          KM        COMPUTE RUNOFF HYDROGRAPH FOR AGRICULTURAL AREA
 378          BA  0.0961
 379          LS     1.5      83
 380          UD    0.23

 381          KK    SW34
 382          HC       5
1                                        HEC-1 INPUT                                        PAGE  9
LINE          ID.......1.......2.......3.......4.......5.......6.......7.......8.......9......10

 383          KK    RT35
 384          KM        ROUTE TO BOTTOM OF SECTION 34
 385          RK    4000   .0013    .016            TRAP      10     2.0

 386          KK   SECT9
 387          KM       TEMPE (TO OLD OUTLET B)
 388          KM       COMPUTE RUNOFF FOR SECTION 9
 389          BA    0.33
 390          LS    1.94      83
 391          UD    0.44

 392          KK  SECT10   OUTLET 3
 393          KM       TEMPE
 394          KM       COMPUTE RUNOFF HYDROGRAPH FOR SECTION 10 - OUTLET 3
 395          BA    0.03
 396          LS    1.50      83
 397          UD    0.92

 398          KK  SECT10   OUTLET 2
 399          KM       TEMPE
 400          KM       COMPUTE RUNOFF HYDROGRAPH FOR SECTION 10 - OUTLET 2
 401          BA    0.19
 402          LS    2.25      88
 403          UD    0.53

 404          KK     RT1
 405          KM       ROUTE SECTION 10 OUTLET 2 HYDROGRAPH TO KYRENE/ELLIOT INTERSECTION
 406          RK    2100  0.0010   0.016            TRAP     0.0    25.0

 407          KK   COMB1
 408          KM       COMBINE SECT9 * SECT10-3 * RT1 TO GIVE HYDROGRAPH AT KYRENE/ELLIOT
 409          HC       3

 410          KK     RT2
 411          KM       ROUTE COMB1 HYDROGRAPH TO KYRENE/WARNER INTERSECTION
 412          RK    5280  0.0004   0.016            TRAP     0.0    25.0
```

```
 413          KK  SECT16   OUTLET 1
 414          KM       TEMPE
 415          KM       COMPUTE RUNOFF HYDROGRAPH FOR SECTION 16 - OUTLET 1
 416          BA    0.14
 417          LS    1.54      83
 418          UD    0.41

 419          KK  SECT15   OUTLET 2
 420          KM       TEMPE
 421          KM       COMPUTE RUNOFF HYDROGRAPH FOR SECTION 15 - OUTLET 2
 422          BA    0.31
 423          LS    1.45      83
 424          UD    0.98
1                                        HEC-1 INPUT                                                PAGE 10

LINE          ID.......1.......2.......3.......4.......5.......6.......7.......8.......9......10

 425          KK   COMB2
 426          KM       COMBINE RT2 * SECT16-1 * SECT15-2 TO GIVE HYDROGRAPH AT KYRENE/WARNER
 427          HC       3

 428          KK     RT3
 429          KM       ROUTE COMB2 HYDROGRAPH TO KYRENE/RAY INTERSECTION
 430          RK    5280  0.0020   0.016            TRAP     0.0    25.0

 431          KK  SECT21   OUTLET 1
 432          KM       TEMPE
 433          KM       COMPUTE RUNOFF HYDROGRAPH FOR SECTION 21 - OUTLET 1
 434          BA    0.42
 435          LS    1.41      83
 436          UD    0.61

 437          KK  SECT22   OUTLET 1
 438          KM       TEMPE
 439          KM       COMPUTE RUNOFF HYDROGRAPH FOR SECTION 22 - OUTLET 1
 440          BA    0.82
 441          LS    2.26      83
 442          UD    0.38

 443          KK   COMB3
 444          KM       COMBINE RT3 * SECT21-1 * SECT22-1 TO GIVE HYDROGRAPH AT KYRENE/RAY
 445          HC       3

 446          KK     RT4
 447          KM       ROUTE COMB3 HYDROGRAPH TO KYRENE/CHANDLER INTERSECTION
 448          RK    5280  0.0019   0.016            TRAP     0.0    25.0

 449          KK  SECT12
 450          KM       TEMPE
 451          KM       COMPUTE RUNOFF HYDROGRAPH FOR SECTION 12
 452          BA    0.50
 453          LS    3.00      83
 454          UD    0.58

 455          KK     RT5
 456          KM       ROUTE SECT12 HYDROGRAPH TO SECT11 CONFLUENCE
 457          RK    2600  0.0006   0.016            TRAP     0.0    25.0

 458          KK  SECT11
 459          KM       TEMPE
 460          KM       COMPUTE RUNOFF HYDROGRAPH FOR SECTION 11
 461          BA    0.51
 462          LS    2.41      86
 463          UD    0.71

 464          KK   COMB4
```

```
465          KM       COMBINE SECT12 * SECT11 HYDROGRAPHS
466          HC       2
1                                   HEC-1 INPUT                                    PAGE 11

LINE         ID.......1.......2.......3.......4.......5.......6.......7.......8.......9......10

467          KK     RT6
468          KM       ROUTE COMB4 HYDROGRAPH TO RURAL/ELLIOT INTERSECTION
469          RK    2600  0.0006   0.016            TRAP     0.0    25.0

470          KK  SECT10   OUTLET 1
471          KM       TEMPE
472          KM       COMPUTE RUNOFF HYDROGRAPH FOR SECTION 10 - OUTLET 1
473          BA    0.50
474          LS    2.41      84
475          UD .  0.36

476          KK   COMB5
477          KM       COMBINE SECT10-1 * RT6 HYDROGRAPHS
478          HC       2

479          KK     RT7
480          KM       ROUTE COMB5 HYDROGRAPH TO RURAL/WARNER INTERSECTION
481          RK    5280  0.0006   0.016            TRAP     0.0    25.0

482          KK  SECT13
483          KM       TEMPE
484          KM       COMPUTE RUNOFF HYDROGRAPH FOR SECTION 13
485          BA    1.00
486          LS    2.72      88
487          UD    0.32

488          KK     RT8
489          KM       ROUTE SECT13 HYDROGRAPH TO RURAL/WARNER INTERSECTION
490          RK    5280  0.0009   0.016            TRAP     0.0    25.0

491          KK  SECT14
492          KM       TEMPE
493          KM       COMPUTE RUNOFF HYDROGRAPH FOR SECTION 14
494          BA    1.00
495          LS    2.83    75.7
496          UD    0.75

497          KK  SECT15   OUTLET 1
498          KM       TEMPE
499          KM       COMPUTE RUNOFF HYDROGRAPH FOR SECTION 15 - OUTLET 1
500          BA    0.69
501          LS    2.18      81
502          UD    0.82

503          KK   COMB6
504          KM       COMBINE RT7 * RT8 * SECT14 * SECT15-1 TO GIVE HYDROGRAPH AT
505          KM       RURAL/CHANDLER INTERSECTION
506          HC       4
1                                   HEC-1 INPUT                                    PAGE 12

LINE         ID.......1.......2.......3.......4.......5.......6.......7.......8.......9......10

507          KK     RT9
508          KM       ROUTE COMB6 HYDROGRAPH TO RURAL/CHANDLER INTERSECTION
509          RK    5280  0.0006   0.016            TRAP     0.0    25.0

510          KK  SECT24
511          KM       TEMPE
512          KM       COMPUTE RUNOFF HYDROGRAPH FOR SECTION 24
```

```
513          BA    1.00
514          LS    2.77      83
515          UD    0.60

516          KK    RT10
517          KM       ROUTE SECT24 HYDROGRAPH TO SECT23 CONFLUENCE
518          RK    5280  0.0011   0.016            TRAP     0.0    25.0

519          KK  SECT23
520          KM       TEMPE
521          KM       COMPUTE RUNOFF HYDROGRAPH FOR SECTION 23
522          BA    1.00
523          LS    2.97      83
524          UD    0.78

525          KK  SECT22   OUTLET 2
526          KM .     TEMPE
527          KM       COMPUTE RUNOFF HYDROGRAPH FOR SECTION 22 - OUTLET 2
528          BA    0.13
529          LS    1.45      83
530          UD    0.33

531          KK   COMB7
532          KM       COMBINE RT9 * RT10 * SECT22-2 * SECT23 TO GIVE HYDROGRAPH AT
533          KM       RURAL/RAY INTERSECTION
534          HC       4

535          KK    RT11
536          KM       ROUTE COMB7 HYDROGRAPH TO RURAL/CHANDLER INTERSECTION
537          RK    5280  0.0009   0.016            TRAP     0.0    25.0

538          KK  SECT26
539          KM       CHANDLER
540          KM       COMPUTE RUNOFF HYDROGRAPH FOR SECTION 26
541          BA    1.00
542          LS    1.82      85
543          UD    0.96

544          KK   COMB8
545          KM       COMBINE RT11 * SECT26
546          HC       2
1                                    HEC-1 INPUT                                    PAGE 13

       LINE          ID.......1.......2.......3.......4.......5.......6.......7.......8.......9......10


547          KK    RT12
548          KM       ROUTE COMB8 HYDROGRAPH TO KYRENE/CHANDLER INTERSECTION
549          RK    5280  0.0009   0.016            TRAP     0.0    25.0

550          KK  SECT28   OUTLET 1
551          KM       CHANDLER
552          KM       COMPUTE RUNOFF HYDROGRAPH FOR SECTION 28 - OUTLET 1
553          BA    0.69
554          LS    2.51      85
555          UD    0.35

556          KK  SECT27
557          KM       CHANDLER
558          KM       COMPUTE RUNOFF HYDROGRAPH FOR SECTION 27
559          BA    1.00
560          LS    2.18      88
561          UD    1.38

562          KK   COMB9
563          KM       COMBINE SECT27 * RT13 * RT12 * RT4 TO GIVE HYDROGRAPH AT
564          KM       KYRENE/CHANDLER INTERSECTION
```

```
HC       4

KK    RT13
KM       ROUTE COMB9 HYDROGRAPH TO KYRENE/SOUTHWEST LOOP INTERSECTION
RK    4000  0.0006   0.016            TRAP     0.0    25.0

KK  SECT34
KM       CHANDLER
KM       COMPUTE RUNOFF HYDROGRAPH FOR SECTION 34
BA    0.67
LS    2.04      83
UD    1.05

KK   COMBB
KM        COMBINE HYDROGRAPHS AT SW CORNER SECTION 34 (INCL. 35,36,25)
HC       3

KK  SECT33   OUTLET 2
KM       CHANDLER
KM       COMPUTE RUNOFF HYDROGRAPH FOR SECTION 33 - OUTLET 2
BA    0.26
LS    1.53      86
UD    0.54
*
* IN     5                    300
* ***************************************************************************
*        Note: Kyrene Pump Station removed from routing.  Pump Station pumps
*        directly to Equalization Basin.
* ***************************************************************************
* KKkyrene
* KM      ONSITE DRAINAGE/STORAGE ANALYSIS 50 YEAR 24 HOUR STORM
* KM      USE PUMP STATION 'INFLOW' HYDROGRAPH FROM KYRENE2.DAT ONSITE FILE
* KM      PUMP STATION DESIGN Q IS 200 CFS.
* BA  0.11
* QI  0.00    0.00    0.00    0.00    0.00    0.00    0.00    0.00    0.00    0.
* QI  0.00    0.00    0.00    0.00    0.00    0.00    0.00    0.00    0.00    0.
* QI  0.00    0.00    0.00    0.00    0.00    0.00    0.00    0.00    0.00    0.
* QI  0.00    0.00    0.00    0.00    0.00    0.00    0.00    0.00    0.00    0.
* QI  0.00    0.00    0.00    0.00    0.00    0.00    0.00    0.00    0.00    0.
* QI  0.00    0.00    0.00    0.00    0.00    0.00    0.00    0.00    0.00    0.
* QI  0.00    0.00    0.00    0.00    0.00    0.00    0.00    0.00    0.00    0
* QI  0.00    0.00    0.00    0.00    0.00    0.00    0.00    0.00    0.00    0.
* QI  0.00    0.00    0.00    0.00    0.00    0.00    0.00    0.00    0.00    0.
* QI  0.00    0.00    0.00    0.00    0.00    0.00    0.00    0.00    0.00    0.
* QI  0.00    0.00    0.00    0.00    0.00    0.00    0.00    0.00    0.00    0.
* QI  0.00    0.00    0.00    0.00    0.00    0.00    0.00     1.0     1.0     1
* QI  1.00    1.00    1.00    1.00    1.00    1.00    2.00    2.00    2.00    2.
* QI  2.00    3.00    3.00    3.00    4.00    4.00    4.00    5.00    5.00    6.
* QI  9.00   14.00   22.00   34.00   54.00   94.00  159.00  209.00  216.00  188.
* QI150.00  116.00   88.00   65.00   47.00   35.00   26.00   20.00   17.00   14.
* QI 12.00   11.00   11.00   10.00    9.00    9.00    8.00    8.00    8.00    7.
* QI  7.00    7.00    6.00    6.00    6.00    6.00    6.00    5.00    5.00    5.
* QI  5.00    5.00    5.00    5.00    4.00    4.00    4.00    4.00    4.00    4.
* QI  3.00    3.00    3.00    3.00    3.00    3.00    3.00    3.00    3.00    3.
* QI  3.00    3.00    3.00    3.00    3.00    3.00    3.00    3.00    3.00    2.
* QI  2.00    2.00    2.00    2.00    2.00    2.00    2.00    2.00    2.00    2.
* QI  2.00    1.00    1.00    1.00    1.00    1.00    1.00    1.00    1.00    1.
* QI  1.00    1.00    1.00    1.00    1.00    1.00    1.00    1.00    1.00    1.
* QI  1.00    1.00    1.00    1.00    1.00    1.00    1.00    1.00    1.00    1.
* QI  1.00    1.00    1.00    1.00    1.00    1.00    1.00    1.00    1.00    1.
* QI  1.00    1.00    1.00    1.00    1.00    1.00    1.00    1.00    0.00    0.
* QI  0.00    0.00    0.00    0.00    0.00    0.00    0.00    0.00    0.00    0.
* QI  0.00    0.00    0.00    0.00    0.00    0.00    0.00    0.00    0.00    0.
* QI  0.00    0.00    0.00    0.00    0.00    0.00    0.00    0.00    0.00    0.
*
* KK ckyre
* HC     2
```

```
                    *
1                                          HEC-1 INPUT                                          PAGE 14
     LINE           ID.......1.......2.......3.......4.......5.......6.......7.......8.......9......10

      584           KK   COMBB
      585           KM        COMBINE HYDROGRAPHS AT BASIN B FROM AREAS TO THE EAST
      586           HC        2

      587           KK  SECT16   OUTLET 3
      588           KM        TEMPE
      589           KM        COMPUTE RUNOFF HYDROGRAPH FOR SECTION 16 - OUTLET 3
      590           BA    0.23
      591           LS    3.00      88
      592           UD    0.39

      593           KK     RT1
      594           KM        ROUTE SECTION 16 OUTLET 3 HYDROGRAPH TO 56TH/RAY INTERSECTION
      595           RK    5280  0.0010   0.016            TRAP     0.0    25.0

      596           KK  SECT20
      597           KM        TEMPE
      598           KM        COMPUTE RUNOFF HYDROGRAPH FOR SECTION 20
      599           BA    0.29
      600           LS    1.10      83
      601           UD    0.28

      602           KK   COMB1
      603           KM        COMBINE SECT10 * RT1 TO GIVE HYDROGRAPH AT 56TH/RAY INTERSECTION
      604           HC        2

      605           KK     RT2
      606           KM        ROUTE COMB1 HYDROGRAPH TO 56TH/CHANDLER INTERSECTION
      607           RK    5280  0.0010   0.016            TRAP     0.0    25.0

      608           KK  SECT29
      609           KM        CHANDLER
      610           KM        COMPUTE RUNOFF HYDROGRAPH FOR SECTION 29
      611           BA    0.50
      612           LS    2.12      85
      613           UD    0.62

      614           KK   COMB2
      615           KM        COMBINE SECT29 * RT2 TO GIVE HYDROGRAPH AT 56TH/CHANDLER INTERSECTION
      616           HC        2

      617           KK     RT3
      618           KM        ROUTE COMB2 HYDROGRAPH TO OUTLET-C AT 56TH/SOUTHWEST LOOP INTERSECTION
      619           RK    3600  0.0010   0.016            TRAP     0.0    25.0

      620           KK  SECT16   OUTLET 2
      621           KM        TEMPE
      622           KM        COMPUTE RUNOFF HYDROGRAPH FOR SECTION 16 - OUTLET 2
      623           BA    0.50
      624           LS    1.52      83
      625           UD    0.54
1                                          HEC-1 INPUT                                          PAGE 15
     LINE           ID.......1.......2.......3.......4.......5.......6.......7.......8.......9......10

      626           KK     RT4
      627           KM        ROUTE SECT16 - OUTLET 2 HYDROGRAPH TO RAY/SO.PAC RR INTERSECTION
      628           RK    5400  0.0010   0.016            TRAP     0.0    25.0

      629           KK  SECT21   OUTLET 2
```

```
630          KM       TEMPE
631          KM       COMPUTE RUNOFF HYDROGRAPH FOR SECTION 21 - OUTLET 2
632          BA    0.59
633          LS    1.60      83
634          UD    0.60

635          KK   COMB3
636          KM       COMBINE SECT21-2 * RT4 * HYDROGRAPHS AT RAY/SO.PAC. RR INTERSECTION
637          HC       2

638          KK     RT5
639          KM       ROUTE COMB3 HYDROGRAPH TO CHANDLER/SO.PAC. RR INTERSECTION
640          RK    5500  0.0010   0.016            TRAP     0.0    25.0

641          KK  SECT28   OUTLET 2
642          KM       CHANDLER
643          KM       COMPUTE RUNOFF HYDROGRAPH FOR SECTION 28 - OUTLET 2
644          BA    0.30
645          LS    1.97      85
646          UD    0.58

647          KK   COMB4
648          KM       COMBINE SECT28-2 * RT5 HYDROGRAPHS AT CHANDLER/SO.PAC. RR INTERSECTION
649          HC       2

650          KK     RT6
651          KM       ROUTE COMB4 HYDROGRAPH TO SOUTHWEST LOOP/SO.PAC. RR INTERSECTION
652          RK    3700  0.0010   0.016            TRAP     0.0    25.0

653          KK  SECT32
654          KM       CHANDLER
655          KM       COMPUTE RUNOFF HYDROGRAPH FOR SECTION 32
656          BA    0.33
657          LS    1.50      83
658          UD    0.60

659          KK  OUTLTC
660          KM       COMBINE RT6 * SECT32 * RT3 TO GIVE HYDOGRAPH AT OUTLET-C AT
661          KM       SOUTHWEST LOOP/SO.PAC. RR INTERSECTION
662          HC       3

663          KK  SECT33   OUTLET 1
664          KM       CHANDLER
665          KM       COMPUTE RUNOFF HYDROGRAPH FOR SECTION 33 - OUTLET 1
666          BA    0.53
667          LS    2.22      82
668          UD    0.18
```



```
LINE         ID.......1.......2.......3.......4.......5.......6.......7.......8.......9......10

669          KK   WCHAN
670          KM       COMBINE SECT33-1 AND OLD OUTLET C AREA
671          HC       2
             *
             *
             *

672          KK    INBB
673          KM       COMBINE ALL HYDROGRAPHS INFLOW TO BASIN B FOREBAY
674          KO       2
675          HC       2
             *
             *
             * *****HDR DESIGN STUDY FOR PHASE 2/3 SANTAN CHANNEL DESIGN  MAY 1998
             * *****DIVERT EXCESS FLOW TO OUTFALL CHANNEL THROUGH 3-10X4 RCB
```

```
                 * *****BASIN B RATING CURVE UPDATED 5/18/98 BY HDR
                 *

676              KK  RFBAY
677              KM        RESERVOIR ROUTING FOR FOREBAY AND EQUAL BASIN
678              KM        EQUAL BASIN STORAGE 39 AC-FT AND FOREBAY STORAGE 12 AC-FT @ 1154.5
679              KM        BASIN B WEIR L=1000'  @ EL 1153.7
680              KM        OUTFALL CHANNEL RCB 3-10X4 @ EL 1150.1 BEGINS CONTROL @ 1151.3(APPROX)
681              KM        OUTFALL CHANNEL INLET @ EL 1151.0 CONTROLS TO ELEV 1151.3(APPROX)
682              KM        TARGET MAX HWL @ 1154.5
683              KO       2
684              RS       1    STOR       0
685              SV       0       3      34      35      36      38      44      47      51
686              SE    1141  1150.1 1151.00  1151.3 1152.13 1153.09  1153.7  1154.0  1154.5
687              SQ       0       0       0     139     300     500     636    1497    3194
                 *
                 *

688              KK  DIVERT
689              KM        Divert RCB flow using diversion spreadsheet rating for wier and RCB.
690              KO       3
691              DT     RCB
692              DI       0     636     748     934    1188    1497    1858    2261    2705    3194
693              DQ       0     636     659     682     705     728     751     774     796     818
                 *
                 *

694              KK  RBAS
695              KM       Route Basin B TO VERIFY hwl. Note: the hwl occurs 12 hours after the peak
696              KM       when the RCB outflow level is below the wier level.
697              KM       Therefore, Basin B hwl cannot exceed Forebay max level(RFBAY)
698              KO       2
699              RS       1    STOR       0
700              SV       0     424     440     450
701              SE    1130  1153.7  1154.5    1155
702              SQ       0    0.01    0.01    0.01
                 *
1                                          HEC-1 INPUT                                          PAGE 17

LINE             ID.......1.......2.......3.......4.......5.......6.......7.......8.......9......10

703              KK  RRCB
704              KM       Retrieve 3-10x4 diverted flow.
705              KO       2
706              DR     RCB
                 *

707              KK  OUTFL
708              KM       Combine O outflow from Basin B with RCB flow(Outfall channel hydrograph)
709              KO       3
710              HC       2
                 *
                 *

711              KK  Rtgila
712              KM       Route thru improved Gila Drain to 56th St.
713              RD    3000   .0008    .018            TRAP      8     2.0
                 *
                 * ***************************************************************************
                 * ***************************************************************************
                 * BASIN GilaA REVISED BY HDR, JULY, 1997.  SPLIT INTO TWO BASINS.
                 * BASIN GilaAe is east of 56th Str. and west of Gila Drain.
                 * BASIN GilaAw is west of 56th Str. and east of I-10
                 * ***************************************************************************
                 * ***************************************************************************
                 *  ORIGINAL BASIN GILAA CARD KEPT FOR RECORD PURPOSES ONLY.
```

```
                 * KK GilaA
                 * KM     Drainage area just below Santan Alignment
                 * BA   0.4
                 * LS          67.2
                 * UD    .3
                 *
                 *  NEW BASIN GILAAE

714              KK  GilaAe
715              KM   BASIN EAST OF 56th STR. AND WEST OF GILA DRAIN
716              KM   CURVE NUMBER ASSUMED.  AREA ASSUMED DEVELOPED AS COMMERCIAL/INDUSTRIAL
717              BA   0.097
718              LS             80
719              UD    0.25
                 *

720              KK .CGilaE
721              KM       Add hydrograph to Santan discharge - above I-10 structures
722              HC       2
                 *

723              KK   RBI10
724              KM       Route new channel from 56th St.to West of I-10 at SMF/I10/Santan TI
725              RD    3100   .0008   0.013            TRAP      20       0
                 *
                 * NEW BASIN GILAAW
1                                          HEC-1 INPUT                                          PAGE 18

LINE             ID.......1.......2.......3.......4.......5.......6.......7.......8.......9......10

726              KK  GilaAw
727              KM   BASIN WEST OF 56th STR. AND EAST OF I-10
728              KM   CURVE NUMBER ASSUMED.  AREA ASSUMED DEVELOPED AS COMMERCIAL/INDUSTRIAL
729              BA   0.111
730              LS             80
731              UD     .23
                 *

732              KK  CGILAW
733              KM   ADD HYDROGRAPHS FROM RBI10 AND GILAAW AT SMF/I10/SANTANT TI
734              HC       2
                 *
                 * ******************************************************************************
                 * ******************************************************************************
                 * END BASIN GILAAE & GILAAW REVISIONS       HDR, JULY 1997
                 * ******************************************************************************
                 * ******************************************************************************
                 *
                 * ***********The following areas(2) not included in West Channel Alts.***
                 * KK GilaB
                 * KM     Small drainage area near Maricopa Rd. Interchange
                 * BA  0.13
                 * LS          62.3
                 * UD  0.74
                 *
                 * KKCGilaB
                 * KM     Add all hydrographs at Maricopa Road (above structure)
                 * HC     2
                 * KO     1                                22
                 * ******************************************************************
                 * ******************************************************************
                 * ******************************************************************
                 * BEGIN 48th STR. MODEL  BY HDR  INSERTED INTO MODEL JULY, 1997
                 * ******************************************************************
                 * ******************************************************************
                 * PREVIOUS STUDY ON 48th DRAINAGE AND BASIN 15 USED 100-YR 6-HR STORM
```

```
                 * THESE CARDS RETAINED FOR RECORD PURPOSES ONLY
                 * ***********************************************************************
                 * CURRENT STUDY WILL USE ADOT 100-YR 24-HR RAINFALL TO COORDINATE WITH
                 * COMBINED FLOWS AT SANTAN CHANNEL.
                 * ***************************************************************************
                 * ******************************************************************************
                 * ********************************************************************************

735              KK      M1
736              KM        Mountain Area 1
                 * PH CARD NOT USED
                 *                0    0.77    1.50    2.64    2.89    3.06    3.37    3.68    4.00
                 * IN    15
                 * PB  3.36
                 * PC     0   .0126   .0217   .0328   .0451   .0555   .0672   .0788   .0898   .10
                 * PC .1146   .1303   .1536   .1984   .2856   .4657   .6832   .8178   .8823    .9
                 * PC .9431   .9576   .9717   .9862       1
                 * BA  .280
                 * IA = 0.25 as per Maricopa Drainage Design Manual (Vol. 1) Table 4.1
1                                          HEC-1 INPUT                                          PAGE 19

LINE             ID.......1.......2.......3.......4.......5.......6.......7.......8.......9......10

737              LS     .25      98
738              UD    .252

739              KK    RtC1
740              KM        Route M1 flow to split
741              RS       1    FLOW      -1
742              RC   0.035   0.035   0.035    2300    0.02
743              RX       3       4       5      20      45      55      65      66
744              RY     4.5     4.4     4.3     1.0     1.0     2.0     5.0     5.1

745              KK      M2
746              KM        Mountain Area 2
747              BA    .200
                 * IA = 0.25 as per Maricopa Drainage Design Manual (Vol. 1) Table 4.1
748              LS     .25      98
749              UD    .190

750              KK    RtC2
751              KM        Route M2 flow to split
752              RS       1    FLOW      -1
753              RC   0.035   0.035   0.035     900    0.02
754              RX       3       4       5      20      25      35      45      46
755              RY     4.5     4.4     4.3     1.0     1.0     2.0     5.0     5.1

756              KK      A1
757              KM       Developed Area 1
758              BA    .041
759              LS              80
760              UD    .169

761              KK   COMB1
762              KM   Combine flows
763              HC       3

764              KK   Splt1
765              KM      Channel splits (divert flow out of model)
766              DT   Splt1
767              DI       0      50     100     150     200     250     500
768              DQ       0      30      60      90     120     150     300

769              KK    RtC3
770              KM        Route flows from split to next tributary
771              RS       1    FLOW      -1
772              RC   0.035   0.035   0.035     600    0.02
```

```
 773          RX      3      4      5     20     75     85     95     96
 774          RY    4.5    4.4    4.3    1.0    1.0    2.0    5.0    5.1

 775          KK     M3
 776          KM        Mountain Area 3
 777          BA    .029
              * IA = 0.25 as per Maricopa Drainage Design Manual (Vol. 1) Table 4.1
 778          LS     .25     98
 779          UD    .035
1                                        HEC-1 INPUT                                          PAGE 20

LINE          ID.......1.......2.......3.......4.......5.......6.......7.......8.......9......10


 780          KK    RtC4
 781          KM        Route flows To convergence of tributary.
 782          RS       1    FLOW     -1
 783          RC   0.035   0.035   0.035    1100    0.02
 784          RX       3      4      5     20     35     45     55     56
 785          RY     4.5    4.4    4.3    1.0    1.0    2.0    5.0    5.1

 786          KK      A2
 787          KM        Developed  Area 2
 788          BA    .020
 789          LS              81
 790          UD    .115

 791          KK   COMB2
 792          KM        Combine, M3, A2, Flows from split
 793          HC       3

 794          KK    RtC5
 795          KM   Route combined flows from convergence of tributary to weir of detention basin
 796          RS       1    FLOW     -1
 797          RC   0.035   0.035   0.035    1500    0.02
 798          RX       3      4      5     20     75     85     95     96
 799          RY     4.5    4.4    4.3    1.0    1.0    2.0    5.0    5.1

 800          KK      M4
 801          KM        Mountain Area 4
 802          BA    .380
              * IA = 0.25 as per Maricopa Drainage Design Manual (Vol. 1) Table 4.1
 803          LS     .25     98
 804          UD    .525

 805          KK    RtR1
 806          KM        Route Mountain flows to weir  (through streets in area 4)
 807          RS       1    FLOW     -1
 808          RC   0.012   0.012   0.012    1600    0.02
              * CHANNEL GEOMETRY EXTENDED TO STABILIZE ROUTING
 809          RX       2     18     19     20     50     51     52     68
 810          RY     2.2    2.0    1.5    1.0    1.0    1.5    2.0    2.2

 811          KK      A3
 812          KM        Developed Area 3
 813          BA    .036
 814          LS              81
 815          UD    .145

 816          KK      A4
 817          KM        Developed Area 4
 818          BA    .067
 819          LS              84
 820          UD    .139
1                                        HEC-1 INPUT                                          PAGE 21

LINE          ID.......1.......2.......3.......4.......5.......6.......7.......8.......9......10
```

```
821          KK   COMB3
822          KM        Combine A3, A4, M4, and routed flows (RtC5)
823          HC       4

824          KK    RET1
825          KM        Flows spill over the weir to retention basin (Divert Flow)
826          DT    RET1    4.61
827          DI       0     200     400     600     800    1000
828          DQ       0       0       4      17      37      63

829          KK    RtC6
830          KM        Route flows in channel to next split in channel
831          RS       1    FLOW      -1
832          RC   0.035   0.035   0.035    1200    0.02
833          RX       3       4       5      20      45      55      65      66
834          RY     4.5     4.4     4.3     1.0     1.0     2.0     5.0     5.1

835          KK      A5
836          KM        Developed Area 5
837          BA    .030
838          LS              85
839          UD    .137

840          KK   COMB4
841          KM        Combine A5 and routed flows
842          HC       2
             * splt2 revised using South Mountain run data (70-30 SPLIT)

843          KK   Splt2
844          KM         Channel splits (Flow diverted from model)
845          DT   Splt2
846          DI       0    1000    1500
847          DQ       0     300     450

848          KK    RtC7
849          KM        Route flows from split to 40th St & Knox RD
850          RS       1    FLOW      -1
851          RC   0.035   0.035   0.035    2800    0.02
852          RX       8       9      10      20      30      35      40      41
853          RY     4.5     4.4     4.3     1.0     1.0     2.0     5.0     5.1
             *     Flows from Area 6b flow through the streets to Knox Rd and 40th St.
             *     All flow is assumed to stay in road.

854          KK     A6b
855          KM        Developed Area 6b
856          BA    .019
857          LS              84
858          UD    .137
```



```
LINE         ID.......1.......2.......3.......4.......5.......6.......7.......8.......9......10

859          KK    RtR2
860          KM        Route flows through Knox Rd from 38th St to 40th St
861          RS       1    FLOW      -1
862          RC   0.012   0.012   0.012    1000    0.02
863          RX       7       8       9      10      75      76      77      78
864          RY     2.1     2.0     1.5     1.0     1.0     1.5     2.0     2.1

865          KK      R1
866          KM        Road segment on Knox Rd from 37th St to 40th St.
867          BA    .007
868          LS             100
869          UD    .145
```

```
870          KK   Comb5
871          KM   Combine flows from Area 6b and Road 1
872          HC       2

873          KK   DivR1
874          KM       Flow across Knox Road
875          DT   DivR1
876          DI       0      50     100     150     200     500    1000
877          DQ       0      50     100     150     200     250     250
             *  If flows from Area 6 and Road 1 can be carried on Knox Rd, no diversion to
             *  channel.  If they cannot be carried, then excess diverted to channel.
             *  Capacity of channel (based on Manning's equation) is 250 cfs.
             *

878          KK     A6a
879          KM       Developed Area 6a
880          BA    .038
881          LS              84
882          UD    .159

883          KK    RtC8
884          KM       Route flows from A6a through channel to Knox and 40th St
885          RS       1    FLOW     -1
886          RC   0.035   0.035   0.035    1000    0.01
887          RX       8      9      10      20      30      35      40      41
888          RY     4.5    4.4     4.3     1.0     1.0     2.0     5.0     5.1

889          KK      A7
890          KM       Developed Area 7
891          BA    .008
892          LS              84
893          UD    .115

894          KK   Comb6
895          KM   Combine flows in channel at 40th St and Knox Rd
896          HC       4
1                                    HEC-1 INPUT                                    PAGE 23
LINE         ID.......1.......2.......3.......4.......5.......6.......7.......8.......9......10

897          KK    RtC9
898          KM       Route flows from Knox to Ranch Circle North
899          RS       1    FLOW     -1
900          RC   0.035   0.035   0.035    1150    0.01
             * CHANNEL GEOMETRY EXTENDED TO STABILIZE ROUTING.  ORIGINAL RX AND RY:
             * RX   0       1      10      20      30      40      49      50
             * RY 4.5     4.4     4.3     1.0     1.0     4.0     4.1     4.2
901          RX       0       1      10      20      30      40      49      50
902          RY       6     4.4     4.3     1.0     1.0     4.0     4.1       6

903          KK      A8
904          KM       Developed Area 8
905          BA    .058
906          LS              84
907          UD    .217

908          KK      R2
909          KM       Road segment on Ranch Circle North from 37th PL to Channel near 40th St.
910          BA    .006
911          LS             100
912          UD    .130

913          KK     A29
914          KM       Area 29 - Trail area from Knox to Ranch Circle North
915          BA   0.006
```

```
916          LS              85
917          UD   0.091

918          KK   COMB7
919          KM       Combine flows from A8, Road 2, and A29
920          HC       4

921          KK   RtC10
922          KM       Route flows from Ranch Circle N to Ray Road
923          RS       1    FLOW     -1
924          RC   0.035   0.035   0.035    1150    0.01
             * CHANNEL GEOMETRY EXTENDED TO STABILIZE ROUTING. ORIG. RX & RY:
             * RX   0      1      10      20      30      40      49      50
             * RY 4.5    4.4     4.3     1.0     1.0     4.0     4.1     4.2
925          RX       0      1      10      20      30      40      49      50
926          RY       6    4.4     4.3     1.0     1.0     4.0     4.1       6

927          KK     A9
928          KM       Developed Area 9
929          BA    .040
930          LS              85
931          UD    .201

932          KK     A30
933          KM       Area 30 - Trail area from Ranch Circle North to Ray Road
934          BA   0.006
935          LS              85
936          UD   0.091
1                                        HEC-1 INPUT                                          PAGE 24

LINE         ID.......1.......2.......3.......4.......5.......6.......7.......8.......9......10

937          KK   COMB8
938          KM       Combine flows from A9, A30, and routed flows
939          HC       3

940          KK   SPLT3
941          KM       Split along Ray Rd near 40th St. (Divert flows to park)
942          DT   Splt3
943          DI       0      74     145     234     340     462     600     750
944          DQ       0      20      43      72     107     131     140     140

945          KK   RtC11
946          KM     Route flows along Ray Road from split at 40th St to Ranch Circle N
947          RS       1    FLOW     -1
948          RC   0.035   0.035   0.035    1600    0.01
             * CHANNEL GEOMETRY EXTENDED TO STABILIZE ROUTING. ORIG. RX & RY:
             * RX   8      9      10      20      30      35      40      41
             * RY 4.5    4.4     4.3     1.0     1.0     2.0     5.0     5.1
949          RX       8      9      10      20      30      35      40      41
950          RY       6    4.4     4.3     1.0     1.0     2.0     5.0       6

951          KK     A11
952          KM       Developed Area 11
953          BA    .034
954          LS              84
955          UD    .161

956          KK     A12
957          KM       Developed Area 12
958          BA    .002
959          LS              85
960          UD    .067

961          KK   DvA12
962          KM     Simulate Detention Area for Development A12
```

```
 963          DT   DvA12    0.07
 964          DI       0      50     100     150     200     250     500
 965          DQ       0      50     100     150     200     250     500

 966          KK   Comb9
 967          KM      Combine flows from A11 & A12
 968          HC       2

 969          KK    RtR3
 970          KM        Route flows from A11 & A12 to Ray Rd
 971          RS       1    FLOW      -1
 972          RC   0.012   0.012   0.012    1900    0.01
 973          RX       0       8       9      10      60      61      62      70
 974          RY     2.1     2.0     1.5     1.0     1.0     1.5     2.0     2.1
1                                          HEC-1 INPUT                                                    PAGE 25

LINE          ID.......1.......2.......3.......4.......5.......6.......7.......8.......9......10


 975          KK     A10
 976          KM        Developed Area 10
 977          BA    .042
 978          LS              85
 979          UD    .133

 980          KK   DvA10
 981          KM      Simulate Detention Area for Development A10
 982          DT   DvA10    2.16
 983          DI       0      50     100     150     200     250     500
 984          DQ       0      50     100     150     200     250     500

 985          KK      R3
 986          KM        Road Segment on Ranch Circle N 40TH ST TO RAY
 987          BA    .007
 988          LS             100
 989          UD    .158

 990          KK      R4
 991          KM       Road segment on Ray Rd from 40TH ST TO RANCH CIRCLE N
 992          BA    .005
 993          LS             100
 994          UD    .125

 995          KK  Comb10
 996          KM       Combine flow from A10, Road3, Road4, and RtR3
 997          HC       5

 998          KK   RtC12
 999          KM       Route combined flows (along Ray Road from Ranch Circle N to 44th ST)
1000          RS       1    FLOW      -1
1001          RC   0.035   0.035   0.035    1000    0.01
              * CHANNEL GEOMETRY EXTENDED TO STABILIZE ROUTING. ORIG. RX & RY:
              * RX     7       8       9      10      30      31      32      33
              * RY   5.2     5.1     5.0     1.0     1.0     5.0     5.1     5.2
1002          RX       7       8       9      10      30      31      32      33
1003          RY       7     5.1     5.0     1.0     1.0     5.0     5.1       7
              *
              *     At this point, the model returns to Knox Road and 40th Street to
              *     simulate flows carried down Knox Road from 40th Street to 44th Street.
              *     Returning flows from R1:

1004          KK   RetR1
1005          KM       Return (to model) the flow coming down Knox Rd
1006          DR   DivR1

1007          KK    RtR4
1008          KM        Route flows through Knox Rd from 40th St to 44th St.
```

```
1009          RS       1    FLOW      -1
1010          RC   0.012   0.012   0.012    2600    0.01
1011          RX       7       8       9      10      75      76      77      78
1012          RY     2.1     2.0     1.5     1.0     1.0     1.5     2.0     2.1
1                                          HEC-1 INPUT                                                    PAGE 26

LINE          ID.......1.......2.......3.......4.......5.......6.......7.......8.......9......10


1013          KK      R6
1014          KM       Road segment on Knox Rd from 40th St to 44th St.
1015          BA    .009
1016          LS              100
1017          UD    .217

1018          KK     A13
1019          KM       Developed Area 13
1020          BA    .001
1021          LS               87
1022          UD    .058

1023          KK   DvA13
1024          KM      Simulate Detention Area for Development A13
1025          DT   DvA13    0.10
1026          DI       0      50     100     150     200     250     500
1027          DQ       0      50     100     150     200     250     500

1028          KK  Comb11
1029          KM       Combine flows from A13, R6 and from R1 (DivR1)
1030          HC       3

1031          KK   RtC13
1032          KM       Route flows from Knox and 44th St to middle of 44th St (entrance to schl)
1033          RS       1    FLOW      -1
1034          RC   0.035   0.035   0.035    1100    0.01
1035          RX      13      14      15      20      30      35      36      37
1036          RY     4.7     4.6     4.5     1.0     1.0     4.5     4.6     4.7

1037          KK     A14
1038          KM       Developed Area 14
1039          BA    .076
1040          LS               79
1041          UD    .233

1042          KK   DvA14
1043          KM      Simulate Detention Area for Development A14
1044          DT   DvA14    4.24
1045          DI       0      50     100     150     200     250     500
1046          DQ       0      50     100     150     200     250     500

1047          KK     R7a
1048          KM       Road Segment on 44th St from Knox Rd to Midway between Knox and Ray Rd
1049          BA    .004
1050          LS              100
1051          UD    .100

1052          KK  Comb12
1053          KM       Combine R7a, A14, and combined flows at A13
1054          HC       3
1                                          HEC-1 INPUT                                                    PAGE 27

LINE          ID.......1.......2.......3.......4.......5.......6.......7.......8.......9......10


1055          KK   RtC14
1056          KM        ROUTE combined flows to Ray Road
1057          RS       1    FLOW      -1
```

```
1058          RC   0.035   0.035   0.035    1100    0.01
1059          RX      13      14      15      20      30      31      35      36
1060          RY     4.5     4.4     4.3     1.0     1.0     2.0     5.0     5.1

1061          KK     A15
1062          KM       Developed Area 15
1063          BA    .047
1064          LS              88
1065          UD    .083

1066          KK     A31
1067          KM       Developed Area 31
1068          BA    .005
1069          LS              92
1070          UD    .113

1071          KK .   R7b
1072          KM        Road Segment on 44th St from Midway between Knox and Ray Rd to Ray Rd
1073          BA    .004
1074          LS             100
1075          UD    .100

1076          KK      R5
1077          KM       Road Segment on Ray Rd from Ranch Circle North to 44th St
1078          BA    .004
1079          LS             100
1080          UD    .083

1081          KK  Comb13
1082          KM      Combine flows
1083          HC       6

1084          KK   RtC15
1085          KM       Route flows in channel along Ray Rd from 44th St to clogged pipes
1086          RS       1    FLOW      -1
1087          RC   0.035   0.035   0.035     500   0.008
              * CHANNEL GEOMETRY EXTENDED TO STABILIZE ROUTING. ORIG. RX & RY:
              * RX   0       5      10      20      40      50      55      60
              * RY 4.7     4.6     4.5     1.0     1.0     4.5     4.6     4.7
1088          RX       0       5      10      20      40      50      55      60
1089          RY       6     4.6     4.5     1.0     1.0     4.5     4.6       6
              *    At this point, there are 3-48" pipes at Ray Road where the water was
              *    designed to flow; however, a field visit showed that the pipes were
              *    clogged, and therefore the flow will be carried along Ray Road.

1090          KK    RtR5
1091          KM       Route flows along Ray Rd from clogged pipes to 46th Place
1092          RS       1    FLOW      -1
1093          RC   0.012   0.012   0.012    1000   0.008
              * CHANNEL GEOMETRY EXTENDED TO STABILIZE ROUTING. ORIG. RX & RY:
              * RX   0       8       9      10      90      91      92     100
              * RY 2.1     2.0     1.5     1.0     1.0     1.5     2.0     2.1
1                                          HEC-1 INPUT                                    PAGE 28

LINE          ID.......1.......2.......3.......4.......5.......6.......7.......8.......9......10

1094          RX       0       8       9      10      90      91      92     100
1095          RY     2.3     2.0     1.5       1       1     1.5       2     2.3

1096          KK    R12A
1097          KM        Road segment on Ray Rd from 44th St to 46th PL
1098          BA   0.005
1099          LS             100
1100          UD   0.127

1101          KK     A16
1102          KM       Developed Area 16
```

```
1103          BA    .015
1104          LS              92
1105          UD    .089

1106          KK   DvA16
1107          KM      Simulate Detention Area for Development A16
1108          DT   DvA16   1.28
1109          DI       0      50     100     150     200     250     500
1110          DQ       0      50     100     150     200     250     500

1111          KK     A17
1112          KM       Developed Area 17
1113          BA    .072
1114          LS              88
1115          UD    .233

1116          KK  Comb14
1117          KM       Combine flows from A16, A17, R12a, RtR5, RtC15
1118          HC       4

1119          KK    RtR6
1120          KM       Route combined flows along Ray Rd from 46th PL to 48th St
1121          RS       1    FLOW      -1
1122          RC   0.012   0.012   0.012    1100   0.008
              * CHANNEL GEOMETRY EXTENDED TO STABILIZE ROUTING. ORIG. RX & RY:
              * RX   0       8       9      10      90      91      92     100
              * RY 2.1     2.0     1.5     1.0     1.0     1.5     2.0     2.1
1123          RX       0       8       9      10      90      91      92     100
1124          RY     2.3       2     1.5       1       1     1.5       2     2.3
              *    At this point, 50% of flow coming down Ray Road (flow in southern portion
              *    of the street) is assumed to flow south down 48th St and into the channel
              *    flowing south down 48th St.
              *    The other 50% of the flow is combined with the flow coming down 48th Street
              *    north of the intersection. Ray Road is assumed to take all of the flow up
              *    to capacity, at which time the excess flow continues south down 48th St.

1125          KK  48-Sth
1126          KM      Simulate flow coming down Ray and flowing down 48th Street
1127          DT  48-Est
1128          DI       0      50     100     200     500    1000    1500    2000
1129          DQ       0      25      50     100     250     500     750    1000
1                                          HEC-1 INPUT                                    PAGE 29

LINE          ID.......1.......2.......3.......4.......5.......6.......7.......8.......9......10

1130          KK     A18
1131          KM      Developed Area 18 (church)
1132          BA    .005
1133          LS              84
1134          UD    .082

1135          KK      R8
1136          KM        Road Segment on Knox Rd from 44th St to 46th St
1137          BA    .003
1138          LS             100
1139          UD    .092

1140          KK  Comb15
1141          KM       Combine flows from R8 and A18
1142          HC       2

1143          KK    RtR7
1144          KM       Route flows along Knox Road from A18 to 47th St
1145          RS       1    FLOW      -1
1146          RC   0.012   0.012   0.012     950    0.01
1147          RX       0       8       9      10      75      76      77      85
```

```
1148          RY     2.1     2.0     1.5     1.0     1.0     1.5     2.0     2.1

1149          KK      R9
1150          KM        Road Segment on Knox Rd from 46th St to 47th St
1151          BA    .002
1152          LS             100
1153          UD    .075

1154          KK     A19
1155          KM       Developed Area 19
1156          BA    .038
1157          LS             85
1158          UD    .217

1159          KK  Comb16
1160          KM        Combine flows from R9, A19, and RtR7
1161          HC      3

1162          KK    RtR8
1163          KM       Route Combined Flows on Knox Rd from 46th St to 47th St
1164          RS       1    FLOW      -1
1165          RC   0.012   0.012   0.012     800    0.01
1166          RX       0       8       9      10      75      76      77      85
1167          RY     2.1     2.0     1.5     1.0     1.0     1.5     2.0     2.1

1168          KK     A20
1169          KM       Developed Area 20
1170          BA    .020
1171          LS             85
1172          UD    .142
```



```
LINE          ID.......1.......2.......3.......4.......5.......6.......7.......8.......9......10

1173          KK   DvA20
1174          KM     Simulate Detention Area for Development A20
1175          DT   DvA20    1.22
1176          DI       0      50     100     150     200     250     500
1177          DQ       0      50     100     150     200     250     500

1178          KK     R10
1179          KM       Road segment on Knox Rd from 47th St to 48th St
1180          BA    .004
1181          LS             100
1182          UD    .083

1183          KK  Comb17
1184          KM        Combine flows from A20, R10, and RtR8
1185          HC      3

1186          KK    RtR9
1187          KM       Route flows along 48th St from Knox Rd to Ray Rd
1188          RS       1    FLOW      -1
1189          RC   0.012   0.012   0.012    2100   0.008
1190          RX       0       8       9      10      90      91      92     100
1191          RY     2.1     2.0     1.5     1.0     1.0     1.5     2.0     2.1
              *
              *     Note:   Developments A21, A23, A24, and A25 drain to basin behind KMart.
              *             Area 21 runoff:   capacity of pipe to basin, remaining heads
              *                               south down 48th street to Ray Road

1192          KK     A21
1193          KM       Developed Area 21
1194          BA    .075
1195          LS             85
1196          UD    .275
```

```
1197          KK  21-Sth
1198          KM      Simulate Detention Area for Development 21
1199          DT  21-Est
1200          DI       0      50      60      70     100     200     500
1201          DQ       0      50      60      70      70      70      70

1202          KK   RtR10
1203          KM       Route flows along 48th St from Development A21 to Ray Rd
1204          RS       1    FLOW      -1
1205          RC   0.012   0.012   0.012    1000   0.008
1206          RX       0       8       9      10      80      81      82      90
1207          RY     2.1     2.0     1.5     1.0     1.0     1.5     2.0     2.1

1208          KK     R11
1209          KM       Road segment on 48th St from Knox to Ray Rd
1210          BA  .008
1211          LS              100
1212          UD    .216
1                                        HEC-1 INPUT                                          PAGE 31

              LINE          ID.......1.......2.......3.......4.......5.......6.......7.......8.......9......10

1213          KK     A22
1214          KM        Developed Area 22
1215          BA    .033
1216          LS              92
1217          UD    .099

1218          KK   DvA22
1219          KM      Simulate Detention Area for Development A22
1220          DT   DvA22    2.75
1221          DI       0      50     100     150     200     250     500
1222          DQ       0      50     100     150     200     250     500

1223          KK    R12b
1224          KM        Road segment on Ray Rd from 46th PL to 48th St
1225          BA   0.005
1226          LS              100
1227          UD   0.127

1228          KK  Retn48
1229          KM       Return divided flow from Ray Road as it reaches 48th ST.
1230          DR  48-Est

1231          KK  Comb18
1232          KM    Combine A21, A22, R11, R12B, RtR10, and Dv48th
1233          HC       6

1234          KK  RaySth
1235          KM       Split at 48th St and Ray - Capacity of 1/2 of Ray Rd is 140 cfs.
1236          DT  RayEst
1237          DI       0      50     100     140     300     500    1000
1238          DQ       0      50     100     140     140     140     140

1239          KK  Comb19
1240          KM    Combine split flows from ray and flows carried down 1/2 of Ray Road
1241          HC       2

1242          KK   RtC16
1243          KM       Route flows along 48th St to Detention Basin
1244          RS       1    FLOW      -1
1245          RC   0.012   0.012   0.012    2000   0.008
1246          RX      13      14      15      20      30      55      56      57
1247          RY     4.5     4.4     4.3     1.0     1.0     4.3     4.4     4.5
```

```
1248          KK     A27
1249          KM       Developed Area 27
1250          BA    .036
1251          LS              92
1252          UD    .540
1                                        HEC-1 INPUT                                        PAGE 32

LINE          ID.......1.......2.......3.......4.......5.......6.......7.......8.......9......10


1253          KK   RtC17
1254          KM       Route flows along 48th St to Detention Basin
1255          RS       1    FLOW      -1
1256          RC   0.012   0.012   0.012    2000   0.008
1257          RX      13      14      15      20      45      55      56      57
1258          RY     4.5     4.4     4.3     1.0     1.0     4.3     4.4     4.5

1259          KK     A28
1260          KM       Developed Area 28
1261          BA    .216
1262          LS              84
1263          UD    .383

1264          KK     R13
1265          KM        Road segment of 48th St from Ray Rd to detention basin
1266          BA   0.007
1267          LS              100
1268          UD   0.235

1269          KK  Comb20
1270          KM       Combine flows from A27, A28, R13, and RtC14 (flows from 48th St and Ray)
1271          HC       4

1272          KK    RET2
1273          KM       Retention Basin - At 48th Street and Thistle Landing
1274          RS       1    STOR       0       0
1275          SV       0    25.2    27.3    29.5    31.8    34.1    36.4
1276          SE    11.5      19    19.5      20    20.5      21    21.5
1277          SS      19     150       3     1.5
1278          SL      13     7.1     0.6     0.5

1279          KK    East
1280          KM       Account for flow traveling south through pipe and east over road (weir)
1281          DT   South
1282          DI       0      41      45      48      53      58      65      73      84      85
1283          DI      91     108     140     192     269     375     516     696     920
1284          DQ       0      41      45      48      53      58      65      73      84      84
1285          DQ      85      85      85      85      85      85      85      85      85
              *
              * DITCH PARAMETERS ASSUMED. 10'BW, 2:1SS, n=0.015, D=5'
              * LENGTH ASSUMED. SLOPE ASSUMED SIMILAR TO PREVIOUS ROUTING.

1286          KK  RtEAST
1287          KM        ROUTE EAST SPLIT TO BOTTOM OF PPERWOOD BASIN C
1288          RS       4    FLOW      -1
1289          RC    .035    .015    .035    2600    .006
1290          RX       0       5      10      22      32      44      54      64
1291          RY       6       6       6       0       0       6       6       6
              *
1                                        HEC-1 INPUT                                        PAGE 33

LINE          ID.......1.......2.......3.......4.......5.......6.......7.......8.......9......10


1292          KK       C
1293          KM   FROM PEPPERWOOD REPORT
1294          BA    0.03
```

```
                 * CN ASSUMED 85 (COMMERCIAL, B SOIL)
1295             LS              85
1296             UD    0.09
                 *

1297             KK   COMBC
1298             KM   COMBINE FLOW FROM BASIN C AND EAST SPLIT
1299             HC       2
                 *

1300             KK     RtC
1301             KM   ROUTE COMBINED FLOWS TO BOTTOM OF BASIN B
1302             RS       2    FLOW
1303             RC    .015    .015    .015    1320    .006
1304             RX       0      10      20      32      42      54      64      74
1305             RY       6       6       6       0       0       6       6       6
                 *
                 *

1306             KK       D PEPPERWOOD BASIN D
1307             KM   CN ASSUMED COMMERCIAL, B SOILS
1308             BA     .06
1309             LS              85
1310             UD      .1
                 *

1311             KK  ROUTED
1312             KM   FROM PEPPERWOOD REPORT
1313             RS       1    STOR      -1
1314             RC    .014    .014    .014    1320    .004     102
1315             RX       0       4       8      12      16      18      22      26
1316             RY     102     101     100     100     100     100     101     102
                 *

1317             KK       E PEPPERWOOD BASIN E
1318             KM   CN ASSUMED COMMERCIAL, B SOILS
1319             BA     .03
1320             LS              85
1321             UD      .1
                 *

1322             KK  ROUTEE
1323             KM   FROM PEPPERWOOD REPORT
1324             RS       1    STOR      -1
1325             RC    .014    .014    .014    1200    .004     102
1326             RX       0       4       8      12      16      18      22      26
1327             RY     102     101     100     100     100     100     101     102
                 *
1                                          HEC-1 INPUT                                          PAGE 34

LINE             ID.......1.......2.......3.......4.......5.......6.......7.......8.......9......10

1328             KK   COMBE
1329             KM   COMBINE HYDROGRAPHS FROM RTEC,ROUTED, AND ROUTEE
1330             HC       3
                 *

1331             KK    RTEE
1332             KM   ROUTE COMBINED HYDROGRAPHS TO BOTTOM OF DA522A
1333             RS       1    FLOW      -1
1334             RC    .015    .015    .015    1320    .005
1335             RX       0      10      20      32      42      54      64      74
1336             RY       6       6       6       0       0       6       6       6
                 *

1337             KK  DA522A
```

```
1338          BA   0.058
1339          LS              81
1340          UD     .17

1341          KK  AD522A
1342          KM   COMBINE HYDROGRAPHS FROM RTEE AND DA522A
1343          HC       2

1344          KK  RT522A
1345          KM   ROUTE COMBINED FLOW THROUGH CONC. CHANNEL ALONG 50th STR.
1346          RS       1    FLOW      -1
1347          RC    .015    .015    .015    1200    .005
1348          RX       0      10      20      32      42      54      64      74
1349          RY       6       6       6       0       0       6       6       6

1350          KK  DA522B
1351          BA . 0.058
1352          LS              81
1353          UD     .17

1354          KK  AD522B
1355          KM   COMBINE HYDROGRAPHS FROM RT522A AND DA522B
1356          HC       2

1357          KK  RT522B
1358          KM   ROUTE COMBINED FLOW THROUGH CONC. CHANNEL TO BOTTOM OF 522E
1359          RS       1    FLOW      -1
1360          RC    .015    .015    .015    1850    .005
1361          RX       0      10      20      32      42      54      64      74
1362          RY       6       6       6       0       0       6       6       6
              *
              * ******************* FLOWS TO 2ST CONCENTRATION POINT ************************
              *
              *     Note:   Developments A21, A23, A24, and A25 drain to basin behind KMart.
              *             Area 21 runoff:   capacity of pipe to basin, remaining heads
              *                               south down 48th street to Ray Road
              *             Area 23 runoff:   70% retained on-site, 30% to basin
              *             Area 24 runoff:   All to basin
              *             Area 25 runoff:   All to basin
1                                        HEC-1 INPUT                                    PAGE 35

LINE          ID.......1.......2.......3.......4.......5.......6.......7.......8.......9......10


1363          KK  Retn21
1364          KM       Return flow from Development 21 that travels through pipe
1365          DR  21-Est

1366          KK    RtP1
1367          KM       Route flows from development 21 to basin  (36" pipe)
1368          RS       1    FLOW      -1
1369          RC   0.013   0.013   0.013    1320   0.008
1370          RX     4.8     4.9       5       6       7       8     8.1     8.2
1371          RY     3.0     2.0     1.5       0       0     1.5     2.0     3.0

1372          KK     A25
1373          KM       Developed Area 25
1374          BA    .043
1375          LS              85
1376          UD    .226

1377          KK  Comb21
1378          KM       Combine flows from A25 and RtP1 (routed flows from A21)
1379          HC       2

1380          KK    RtP2
1381          KM       Route flows from A21 and A25 to basin  (54" pipe)
```

```
1382          RS       1    FLOW      -1
1383          RC   0.013   0.013   0.013     100   0.008
1384          RX     4.9       5       6       7     7.5     8.5     9.5     9.6
1385          RY     4.5     2.3     1.0       0       0     1.0     2.3     4.5

1386          KK     A23
1387          KM       Developed Area 23
1388          BA    .039
1389          LS              85
1390          UD    .200

1391          KK   DvA23
1392          KM      Simulate Detention Area for Development A23
1393          DT   DvA23    2.37
1394          DI       0      50     100     150     200     250     500
1395          DQ       0      50     100     150     200     250     500

1396          KK   RtC18
1397          KM       Route flows through park
1398          RS       1    FLOW      -1
1399          RC   0.035   0.035   0.035    1000   0.008
1400          RX      10      20      50     100     150     200     230     240
1401          RY     2.5     2.3     1.0       0       0     1.0     2.3     2.5
              * A24 - CN CHANGED FROM 85 TO 65 BASED ON PLANS FOR CITY PARK.
              *        10% @ CN=98 AND 90% @CN=61 (FROM TR-55)
1                                          HEC-1 INPUT                                          PAGE 36

LINE          ID.......1.......2.......3.......4.......5.......6.......7.......8.......9......10

1402          KK     A24
1403          KM       Developed Area 24
1404          BA    .064
1405          LS              65
1406          UD    .285

1407          KK  Comb22
1408          KM       Combine flows from A21 & A25 (RtP2), A23 (RtC18), A24
1409          HC       3

1410          KK    RET3
1411          KM      Retention Basin - in south portion of A24 (north of KMart - A26)
1412          RS       1    STOR       0       0
1413          SV       0    0.59    2.68    5.01    7.58     9.0
1414          SE    20.5      21      22      23      24      25
1415          SS      24     100       3     1.5
1416          SL      21   13.14     0.6     0.5

1417          KK   RtC19
1418          KM       Route flows along I-10 in channel from Basin
1419          RS       1    FLOW      -1
1420          RC   0.035   0.035   0.035     700   0.008
1421          RX      13      14      15      20      45      55      56      57
1422          RY     4.5     4.4     4.3     1.0     1.0     4.3     4.4     4.5

1423          KK     A26
1424          KM        Developed Area 26
1425          BA    .048
1426          LS              92
1427          UD    .089

1428          KK   DvA26
1429          KM      Simulate Detention Area for Development A26
1430          DT   DvA26    4.04
1431          DI       0      50     100     150     200     250     500
1432          DQ       0      50     100     150     200     250     500
```

```
1433          KK  RtnRay
1434          KM       Return divided flow from Ray and 48th ST
1435          DR  RayEst

1436          KK   RtR11
1437          KM       Route flows along Ray Rd
1438          RS       1    FLOW      -1
1439          RC   0.012   0.012   0.012    2000   0.008
1440          RX       0       8       9      10      90      91      92     100
1441          RY     2.1     2.0     1.5     1.0     1.0     1.5     2.0     2.1

1442          KK     R14
1443          KM       Road Segment along Ray from 48th to I-10
1444          BA    .008
1445          LS             100
1446          UD    .186
1                                   HEC-1 INPUT                                    PAGE 37

LINE          ID.......1.......2.......3.......4.......5.......6.......7.......8.......9......10

1447          KK  Comb23
1448          KM       Combine flows from A26, R14, RtR11, and RtC19 (basin)
1449          HC       4
              * DIV520, DIVBOX, & ADDBOX FROM HDR SOUTH MOUNTAIN RUN.

1450          KK  DIV520 DIVERT WEIR FLOW THRU EQUIP. CROSSING UNDER EB OFF-RAMP
1451          KM   FROM HDR SOUTH MONTAIN RUN
1452          DT  DIVBOX
1453          DI       0     100     200     300     400     500
1454          DQ       0       0      60     143     230     320

1455          KK   RTE23 ROUTE CHANNEL FLOW SOUTH ALONG I-10
1456          KM   ASSUME BW=10', 2:1ss, D=5', n=0.015, s & l FROM SOUTH MONTAIN RUN
1457          RS       1    FLOW      -1
1458          RC    .015    .015    .015    1000   .0099
1459          RX       0      10      20      30      40      50      60      70
1460          RY       5       5       5       0       0       5       5       5

1461          KK  DIVBOX RETREIVE FLOW THRU EQUIPMENT CROSSING
1462          DR  DIVBOX
              * NOTE: FLOW RE-COMBINES AT APPROX. BOTTOM OF BASIN A1

1463          KK  ADDBOX RE-COMBINE FLOW DIVERTED THRU EQUIP. CROSSING.
1464          KM   RE-COMBINE FLOW DIVERTED THRU EQUIP. CROSSING
1465          HC       2
              *
              * PEPPERWOOD MODEL, MODIFIED TO REFLECT NEW DEVELOPMENT PLANS EAST OF 48th
              * BETWEEN RAY ROAD AND THISTLE.  NO LOCAL RETENTION CONSIDERED.
              *

1466          KK     VA1 VESTAR PHASE I & II DEVELOPMENTS.
1467          KM   ASSUMED COMMERCIAL (ZONING R-3), B SOILS, AREA FROM KIMLEY HORN GRADING PLAN
1468          BA    0.11
1469          LS             85
1470          UD    0.17
              *

1471          KK  COMBA1 COMBINE FLOW FROM A1 WITH RE-COMBINED FLOWS FROM RAY ROAD.
1472          HC       2
              *

1473          KK   RTEA1 ROUTE A1 TO A2 VIA DITCH ON I-10 R.O.W.
1474          KM   ASSUME BW=10', 2:1ss, D=5', n=0.015
1475          RS       1    FLOW
1476          RC    .015    .015    .015    1320    .002
1477          RX       0      10      20      30      40      50      60      70
```

```
1478          RY      5      5      5      0      0      5      5      5
              *
1                                        HEC-1 INPUT                                          PAGE 38

LINE          ID.......1.......2.......3.......4.......5.......6.......7.......8.......9......10

1479          KK     VA2 MARK DEVELOPMENT APARTMENTS, COMMERCE PARK I & II
1480          KM   CN ASSUMES COMMERCIAL AND APARMENT DEVELOPMENT ON B SOIL
1481          BA    0.17
1482          LS              85
1483          UD    0.19
              *

1484          KK   COMBA
1485          KM   COMBINE A1 & A2 HYDROGRPAHS
1486          HC      2
              *

1487          KK  STORA2
1488          KM   RETENTION CELL IN SE CORNER OF BASIN VA2.
              * SEE KIMLEY/HORN GRADING & DRAINAGE PLANS
1489          RS      1    STOR      -1
1490          SQ      0    0.01    1500
1491          SV      0   21.44   21.44
              *

1492          KK   RTEA2 ROUTE A2 TO B VIA DITCH ON I-10 R.O.W.
1493          KM   ASSUME BW=10', 2:1ss, D=5', n=0.015
1494          RS      1    FLOW
1495          RC   .015    .015    .015    1320    .008
1496          RX      0      10      20      30      40      50      60      70
1497          RY      5       5       5       0       0       5       5       5
              *

1498          KK       B KYRENE SCHOOL DISTRICT
1499          KM   CN ASSUMED TO BE 85 (COMMERCIAL, B SOIL)
1500          BA    0.06
1501          LS              85
1502          UD    0.09
              *

1503          KK   COMBB
1504          KM   COMBINE HYDROGRAPHS FROM RTEA2 AND BASIN B
1505          HC      2
              *

1506          KK     RtB
1507          KM   ROUTE FLOW TO BOTTOM OF PEPPERWOOD BASIN F PARALLEL TO I-10
1508          RS      2    FLOW
1509          RC   .015    .015    .015    1320    .006
1510          RX      0       5      10      22      32      44      54      64
1511          RY      6       6       6       0       0       6       6       6
              *

1512          KK       F PEPPERWOOD BASIN F
1513          KM   CN ASSUMED, COMMERCIAL, B SOILS
1514          BA     .04
1515          LS              85
1516          UD     .09
              *
1                                        HEC-1 INPUT                                          PAGE 39

LINE          ID.......1.......2.......3.......4.......5.......6.......7.......8.......9......10

1517          KK    R200
```

```
1518          KM   CN ASSUMED = 85 (COMMERCIAL, B SOIL)
1519          BA     .14
1520          LS              85
1521          UD     .28
              *

1522          KK  ROUTER
1523          KM   FROM PEPPERWOOD REPORT
1524          RS       1    STOR      -1
1525          RC    .014    .014    .014    5300    .004     102
1526          RX       0       4       8      12      16      18      22      26
1527          RY     102     101     100     100     100     100     101     102
              *

1528          KK   COMBF
1529          KM   COMBINE HYDROGRAPHS FROM BASIN F, ROUTER, AND RTEB
1530          HC       3
              *

1531          KK    RTEF
1532          KM   ROUTE FLOW THROUGH CONCRETE CHANNEL ALONG I-10 R.O.W TO BOTTOM OF DA522C
1533          RS       1    FLOW      -1
1534          RC    .015    .015    .015    1320    .005
1535          RX       0      10      20      32      42      54      64      74
1536          RY       6       6       6       0       0       6       6       6
              *
              * ORIG. BASIN 522a & 522b MODIFIED TO REFLECT FUTURE DEVELOPMENT
              * AND DRAINAGE CORRIDORS.  ORIG. BASINS HAD CN OF 81, AND CN=81
              * ASSUMED FOR NEW BASINS.
              *

1537          KK  DA522C
1538          BA   0.044
1539          LS              81
1540          UD    0.14

1541          KK  AD522C
1542          KM   COMBINE HYDROGRAPHS FROM DA522C AND RTEF
1543          HC       2

1544          KK  RT522C
1545          KM   ROUTE FLOW THROUGH CONC. ADOT CHANNEL TO BOTTOM OF DA522D
1546          RS       1    FLOW      -1
1547          RC    .015    .015    .015    1450    .003
1548          RX       0      10      20      32      42      54      64      74
1549          RY       6       6       6       0       0       6       6       6
              *
              * AREAS FOR DA522D & DA522E BASED ON ALIGNMENT SHOWN IN SOUTH MOUNTAIN REPORT.
1                                          HEC-1 INPUT                                    PAGE 40

LINE          ID.......1.......2.......3.......4.......5.......6.......7.......8.......9......10

1550          KK  DA522D
1551          BA   0.024
1552          LS              81
1553          UD     .13

1554          KK  AD522D
1555          KM   COMBINE HYDROGRAPHS FROM RT522C AND DA522D
1556          HC       2

1557          KK  RT522D
1558          KM   ROUTE COMBINED FLOW THROUGH CONC. ADOT CHANNEL TO BOTTOM OF 522E
1559          RS       1    FLOW      -1
1560          RC    .015    .015    .015    1490    .003
1561          RX       0      10      20      32      42      54      64      74
```

```
1562          RY       6       6       6       0       0       6       6       6
              *

1563          KK  DA522E
1564          BA    0.05
1565          LS              81
1566          UD    0.09

1567          KK  AD522E
1568          KM   COMBINE HYDROGRAPHS FROM RT522D, RT522B, AND DA522E
1569          HC       3
              *
              * ****************************
              * THE FOLLOWING IS FROM THE HDR SOUTH MOUNTAIN MODEL

1570          KK   DA513  (CVL195) CVL data
1571          BA .0.0879
1572          LS              85
1573          UD   0.204

1574          KK   DA514  (CVL197) CVL data
1575          BA  0.0564
1576          LS            84.1
1577          UD   0.144

1578          KK   DA515  (CVL199) CVL data
1579          BA  0.0466
1580          LS              84
1581          UD   0.186

1582          KK   AD515  Combine 515, 514 and 513
1583          HC       3

1584          KK   RT515  Channel info from Clouse plans.
1585          RS       1    FLOW      -1
1586          RC   0.040   0.020   0.040    2600  0.0059
1587          RX      80      90     100     106     116     122     132     142
1588          RY      10      10      10       6       6      10      10      10
1                                          HEC-1 INPUT                                                    PAGE 41

LINE          ID.......1.......2.......3.......4.......5.......6.......7.......8.......9......10

1589          KK   DA517  (CVL320) CVL data
1590          BA  0.1700
1591          LS              77
1592          UD   0.258
              * RETREIVE SOUTH SPLIT AT 48th & THISTLE (KIMLEY/HORN DATA)

1593          KK   South
1594          KM   RETREIVE SOUTH SPLIT FROM 48th & THISTLE
1595          DR   South
              * CONTINUE WITH HDR SOUTH MONTAIN DATA

1596          KK   AD517  Add in 517
1597          HC       3

1598          KK   RT517  Assumed channel shape based on estimated 48th St. cross-section.
1599          RS       1    FLOW      -1
1600          RC   0.020   0.025   0.040     850   0.005
1601          RX      78      80     100     112     116     118     122     222
1602          RY      12     9.6      10    9.76    7.76    7.76      10      12

1603          KK   DA518
1604          BA   0.099
1605          LS              81
1606          UD    0.58
```

```
1607          KK   AD518  Combine 518 with flow moving south in 48th St.
1608          HC       2
              * HDR SOUTH MOUNTAIN RUN SHOWS SPLIT AT 48th & CHANDLER.  ASSUME THAT
              * SPLIT HAS BEEN CORRECTED, AND ALL FLOW GOES SOUTH ALONG 48th.
              * ORIGINAL SPLIT CARDS:
              * KKDIV518 Assume 50-50 split at 48th & Chandler IC.
              * DT DIVSE
              * DI     0    2000
              * DQ     0    1000
              *
              * CHANNEL GEOMETRY FOR RT518 HAS BEEN EXTENDED TO STABILIZE ROUTING
              * ORIG. RX & RY:
              * RX  80      90     100     105     110     115     125     135
              * RY10.4    10.2      10       5       5      10    10.2    10.4
              * RT518 MODIFIED TO REFLECT NEW CONC. CHANNEL PARALLEL TO 48th STR.
              * ORIGINAL CARDS
              *  RT518  Assume channel size based on existing tail-water ditch.
              * RS   1    FLOW      -1
              * RC 0.035   0.025   0.035    3600  0.0061
              * RX  50      90     100     105     110     115     125     165
              * RY  11    10.2      10       5       5      10    10.2      11

1609          KK   RT518
1610          KM   ROUTE FLOW TO BOTTOM OF 519B
1611          RS       1    FLOW      -1
1612          RC    .015    .015    .015    1320    .005
1613          RX       0      10      20      30      40      50      60      70
1614          RY       5       5       5       0       0       5       5       5
              *
              * ORIGINAL BASINS 519a AND 519b SPLIT UP TO REFLECT EXPECTED ROAD AND
              * DRAINAGE PATTERNS.  ORIGINAL DATA:
              * KKDA519a
              * BA0.22
              * LS          81
              * UD0.62
              * KKAD519a  Combine 519a and flow from N. at 48th & SMF.
              * HC   2
              *
              * ORIGINAL RETRIEVAL CARDS FOR SPLIT AT 48th & CHANDLER DELETED.
              *
              * KK DIVSE   Retrieve SE part of diversion from 48th St and Chandler Blvd IC.
              * DR DIVSE
              * KK  RTSE  Route to approx 50th St. thru assumed channel overland
              * RS     5    FLOW      -1
              * RC 0.035   0.035   0.035    3100   0.005
              * RX    80      90     100     110     610     620     630     640
              * RY    10      10      10       9       9      10      10      10
              *
              * KKDA519b
              * BA 0.322
              * LS          85
              * UD0.43
              *
              * KKRT519b  Assume channel size and route 519b back to 48th St.
              * RS   1    FLOW      -1
              * RC 0.035   0.018   0.035    2800  0.0011
              * RX  80      90     100     112     124     136     146     156
              * RY  10      10      10       4       4      10      10      10
              * KKAD519b  Combine all flows approx. 400ft West of 48th St. Design Q - C219.
              * HC   3
              *
              * MODIFIED AREAS
              *
1                                    HEC-1 INPUT                                    PAGE 42

LINE          ID.......1.......2.......3.......4.......5.......6.......7.......8.......9......10
```

```
1615          KK  DA519A
1616          BA   0.046
1617          LS              85
1618          UD    0.13
              *

1619          KK  RT519A
1620          KM   ROUTE EAST TO END OF 519B (AT 48th STR.)
1621          RS       1    FLOW      -1
1622          RC    .015    .015    .015    1900    .003
1623          RX       0      10      20      30      40      50      60      70
1624          RY       5       5       5       0       0       5       5       5
              *

1625          KK .DA519B
1626          BA   0.136
1627          LS              81
1628          UD    0.19
              *

1629          KK  AD519B
1630          KM   COMBINE HYDROGRAPHS FROM RT518, RT519A, & DA519B
1631          HC       3
              *

1632          KK  RT519B
1633          KM   ROUTE COMBINED HYDROGRAPHS SOUTH TO WEST SIDE OF 48th & FRYE
1634          RS       1    FLOW      -1
1635          RC    .015    .015    .015    1320    .006
1636          RX       0      10      20      32      42      54      64      74
1637          RY       6       6       6       0       0       6       6       6
              *

1638          KK  DA519C
1639          BA   0.166
1640          LS              85
1641          UD    0.19
              *

1642          KK  RT519C
1643          KM   ROUTE FLOW EAST TO 48th & FRYE
1644          RS       1    FLOW      -1
1645          RC    .015    .015    .015     900    .002
1646          RX       0      10      20      30      40      50      60      70
1647          RY       5       5       5       0       0       5       5       5
              *

1648          KK  DA519D
1649          BA    .078
1650          LS              81
1651          UD     .19
              *
```



```
LINE          ID.......1.......2.......3.......4.......5.......6.......7.......8.......9......10

1652          KK  AD519D
1653          KM   COMBINE HYDROGRAPHS FROM RT519B, RT519C, & DA519D
1654          HC       3
              *

1655          KK  RT519D
1656          KM   ROUTE FLOW TO ADOT CHANNEL
1657          RS       1    FLOW      -1
```

```
1658          RC    .015    .015    .015     600    .008
1659          RX       0      10      20      32      42      54      64      74
1660          RY       6       6       6       0       0       6       6       6
              *

1661          KK  DA519E
1662          BA    .031
1663          LS              85
1664          UD     .11
              *

1665          KK  RT519E
1666          KM   ROUTE FLOW THROUGH ADOT CHANNEL TO BOTTOM OF DA519F
1667          RS       1    FLOW      -1
1668          RC    .015    .015    .015    2200    .002
1669          RX       0      10      20      32      42      54      64      74
1670          RY       6       6       6       0       0       6       6       6
              *

1671          KK  DA519F
1672          BA    .099
1673          LS              85
1674          UD     .23
              *

1675          KK  AD519F
1676          KM   COMBINE HYDROGRAPHS FROM RT519E AND DA519F
1677          HC       2
              *

1678          KK  DA519G
1679          BA   0.032
1680          LS              81
1681          UD     .11
              *

1682          KK  AD519G
1683          KM   COMBINE HYDROGRAPHS FROM AD519F, DA519G, RT519D, & AD522E
1684          HC       4
              *
1                                        HEC-1 INPUT                                                PAGE 44

LINE          ID.......1.......2.......3.......4.......5.......6.......7.......8.......9......10

1685          KK  RTI-10
1686          KM   ROUTE FLOWS THROUGH OPEN CHANNEL ACROSS I-10 R.O.W.
1687          RS       1    FLOW      -1
1688          RC    .015    .015    .015     750    .002
1689          RX       0      10      20      44      54      78      88      98
1690          RY      12      12      12       0       0      12      12      12
              *  ADD ADITIONAL AREA FOR BASN 15 AND AREA WEST OF BASIN

1691          KK      B1 Area west of Basin 15
1692          KM   CN=85 assumed (commercial, B soil)
1693          BA   0.106
1694          LS              85
1695          UD    0.16
              *

1696          KK   RTEB1
1697          KM   Route flow to Basin 15
1698          RS       1    FLOW      -1
1699          RC    .015    .015    .015    3000    .005
1700          RX       0      10      20      30      40      50      60      70
1701          RY       5       5       5       0       0       5       5       5
              *
```

```
1702          KK  ADI-10
1703          KM   COMBINE HYDROGRAPHS FROM RTI-10 AND RTEB1
1704          HC       2
              *

1705          KK     B15
1706          KM   Drainage Area of Retention Basin 15
1707          BA   0.129
1708          LS              85
1709          UD    0.25
              *

1710          KK  ADBA15
1711          KM   COMBINE HYDROGRAPHS FROM ADI-10 AND B15
1712          HC       2
              *
              * ORIGINAL SOUTH MOUNTAIN DATA
              *

1713          KK     PMP  TI on-site pumpstation hydrograph.
1714          BA    0.16
1715          IN      10                     145
1716          QI       0       0       0       0       0       0       0       0       0       0
1717          QI       0       0       0       0       0       0       0       0       0       0
1718          QI       0       0       0       0       0       0       0       0       0       0
1719          QI       0       0       0       0       0       0       0       0       0       0
1720          QI       0       0       0       0       0       0       0       0       0       0
1721          QI       0       0       0       0       0       0       0       0       0       0
1722          QI       0       0       0       0       0      40       0      40       0       0
1723          QI      41      41      83     209     210     211      51      51      11      11
1724          QI      11      11      51      11      11      11      11      11      11      11
1                                          HEC-1 INPUT                                          PAGE 45

LINE          ID.......1.......2.......3.......4.......5.......6.......7.......8.......9......10

1725          QI      51      11      11      10      10      10      10      50      10      10
1726          QI      10      10      50      10      10      10      10      10      10      10
1727          QI      10      10      10      10      10      10       9       9       9       9
1728          QI      49       9       9       9       9       9       9       9       9       9
1729          QI       9       9       9       9       9       9       9       9       9       9
1730          QI       9       9       9       9       9

1731          KK   ADPMP  combine flows from IC onsite pumpstation and route thru basin.
1732          HC       2
              *
              * *****Original ADOT BASIN 15 Design Concept not used in this run.
              * KK DET  Route thru detention basin S. side of SMF, outlet to Gila Floodw
              * KM         thru 54" RCP.
              * RS     1    STOR       0
              * SV     0    13.8    23.0   118.9   221.8   243.2   264.9   286.9   309.2   331
              * SE  1143  1144.5    1145    1150    1155    1156    1157    1158    1159    11
              * SQ     0      13      20      79      98     102     105     108     111     1
              * ******************************************************************************
              * PREVIOUS BASIN 15 ROUTINE KEPT FOR RECORD PURPOSES ONLY
              * ******************************************************************************
              * KK DIV1
              * KM        Divert initial flows into 50 af water quality retention cell.
              * KO     1
              * DT CELL1
              * DI     0     100     101    3859
              * DQ     0     100       0       0
              * KK DIV2
              * KM        Divert Q above 800 cfs into main cell.
              * KO     1
              * DT CELL2
              * DI     0     800     801    3859
```

```
                    * DQ      0       0       1    3059
                    * KK RTRC1
                    * KM        Retrieve Cell 1 inflow.
                    * KO      3
                    * DR CELL1
                    * KK RTRC2
                    * KM        Retrieve Cell 2 inflow.
                    * KO      3
                    * DR CELL2
                    * KK BAS15
                    * KM        Combine cells 1 and 2 for total volume.
                    * KO      0
                    * HC      2
                    * KK RT_15
                    * KM        Route thru combined cells.(Dewatered post-event)
                    * KM        DHW at 1164, emergency spillway at 1167.
                    * KO      1
                    * RC      1    STOR       0
                    * SV      0     300     350
                    * SE   1150    1164    1168
                    * SS   1167     100     3.1     1.5
                    * ******************************************************************************
                    * ******************************************************************************
                    * REVISED BASIN 15 ROUTINE BY HDR, JULY, 1997
                    * BOTH BASIN 15 AND FIRST FLUSH BASIN ARE RETENTION BASINS
                    * ******************************************************************************
                    * ******************************************************************************
1                                                HEC-1 INPUT                                          PAGE 46

        LINE        ID.......1.......2.......3.......4.......5.......6.......7.......8.......9......10

        1733        KK   B15FF
        1734        KM   DIVERT FIRST 25 ac-ft INTO FIRST FLUSH BASIN, MAX. VOLUME 25 a.f.
        1735        DT   DIVFF      25
        1736        DI       0   10000
        1737        DQ       0   10000
                    *

        1738        KK  B15RCB
        1739        KM   DIVERT ALL    FLOW INTO BASIN 15.  DIVERSION RATING CURVE COMPUTED BY
        1740        KM   COMBING RATING CURVES OF 36" RCP WITH RATING CURVE OF WEIR INLET TO BASIN 15.
        1741        DT  DIVB15
        1742        DI       0       4     313     959    1848    2840   10000
        1743        DQ       0       4     313     959    1848    2840   10000
                    *
                    * ******************************************************************
                    * ******************************************************************
                    * *************END SMF 48TH ST FILE*************************************
                    * ******************************************************************
                    * ******************************************************************
                    *

        1744        KK   I10W
        1745        KM        Combine SMF/I10/S.48th flow from Basin 15 with Santan Channel Flow
        1746        HC       2
                    *

        1747        KK   RI10W
        1748        KM       Route from SMF/I10/Santan TI to Gila Drain Floodway
        1749        RS       1    FLOW      -1
        1750        RC    .035   0.018   0.035    4000    .002
        1751        RX       0       2      14      26      36      49      61      63
        1752        RY    1153    1154    1153    1147  1146.5    1153    1154    1153
                    *
                    * ID      Gila Floodway offsite Hydrology                          <GILA1b>
                    * ID      Proposed Floodway using detention basins
```

```
                    * ID      HYDROLOGY FOR SEGMENT 1 of GILA FLOODWAY
                    * ID      I-10 TO 44th STREET
                    * ID      Inflow hydrographs from other analyses
                    * ID      Cells for detention - I10 to the Treatment Plant
                    * ID      100 year 24-Hour Storm - Aug 18, 1992   HDR - PHX
                    * IT    10                  2000
                    * IO     4       0       0
                    * DIAGRAM
                    *
                    * KKCGilaB
                    * KM      Outflow hydrograph from Santan Freeway drainage system
                    * KM      Outflow Hydrograph at Maricopa Road and I-10
                    * BA30.859
                    * IN     5
                    *
                    *  ***************QI LINES DELETED***********************
                    *  ****************************************************
                    * KKDETI10
                    * KM      Outflow hydrograph from South Mountain Freeway
                    * KM      Detention Basin @ interchange
                    * BA 4.083
                    * IN     5
                    * *****************QI LINES DELETED********************
                    * ****************************************************
                    *
                    * KK CGila
                    * KM      Combine Santan & east So. Mt. Frwy Q's @ U/S end of Gila Floodway
                    * HC     2
                    *
1                                                HEC-1 INPUT                                          PAGE 47

          LINE      ID.......1.......2.......3.......4.......5.......6.......7.......8.......9......10


          1753      KK  R1Gila
          1754      KM       Route inflow through first cell of Gila Floodway
          1755      KM        Revised embankment of cell 1
          1756      RS       1    STOR       0
          1757      SV     0.0     1.8    9.25    14.8    29.8    37.5    45.2    61.0
          1758      SE    34.5    35.5    36.5    37.0    38.0    38.5    39.0    40.0
          1759      SQ     0.0     7.4    23.0    30.0    40.0   281.6   720.0  1954.7
                    *

          1760      KK  R2Gila
          1761      KM       Route inflow through second cell of Gila Floodway
          1762      KM        Revised embankment of cell 2
          1763      RS       1    STOR       0
          1764      SV     0.0     4.2    15.6    24.9    49.5    62.4    75.2   101.4
          1765      SE    30.5    31.5    32.5    33.0    34.0    34.5    35.0    36.0
          1766      SQ     0.0     7.4    23.0    30.0    40.0   281.6   720.0  1954.7
                    *

          1767      KK  R3Gila
          1768      KM       Route inflow through third cell of Gila Floodway
          1769      KM        Revised grading of cell 3
          1770      RS       1    STOR       0
          1771      SV     0.0     0.2    10.9    43.5    55.0    67.3    94.9
          1772      SE    21.9    22.0    24.0    26.0    26.5    27.0    28.0
          1773      SQ     0.0     1.0    23.2    44.2   376.7   981.6  2687.3
                    *
                    * ******************************************************************************
                    * ******************************************************************************
                    *
          1774      ZZ
1
               SCHEMATIC DIAGRAM OF STREAM NETWORK
 INPUT
```

```
LINE      (V) ROUTING          (--->) DIVERSION OR PUMP FLOW
 NO.      (.) CONNECTOR        (<---) RETURN OF DIVERTED OR PUMPED FLOW
  66        bash
            .
 100        .      CHNDLR
            .           .
            .           .
 134     cchand...........
            .
            .
 138        .      interc
            .           .
            .           .
 172      addTI...........
            .
            .
 176        .        basg
            .           V
            .           V
 210        .       rbasg
            .           V
            .           V
 217        .      rtbasg
            .           .
            .           .
 219     cinter...........
            .
            .
 223        .      MCSWL2
            .           .
            .           .
 230      cbash...........
            V
            V
 233        RT1
            .
            .
 236        .      MCSWL3
            .           .
            .           .
 242      COMB1...........
            .
            .
 246        .      SECT25
            .           V
            .           V
 253        .         RT1
            .           .
            .           .
 256        .           .      SECT36
            .           .          .
            .           .          .
 264     SECT36......................
            .
            .
 268        .      mcclin
            .           .
            .           .
 303      cmcln...........
            V
            V
 305     RT2536
            .
            .
```

```
308          .     RUSWL1
             .        V
             .        V
314          .       RT1
             .        .
             .        .
317          .        .     RUSWL2
             .        .        V
             .        .        V
323          .        .       RT2
             .        .        .
             .        .        .
326          .        .        .     RUSWL3
             .        .        .        .
             .        .        .        .
332       COMB1.......................................
             V        .
             V        .
334        RT3
             .
             .
337          .     RUSWL4
             .        .
             .        .
343          .        .     RUSWL5
             .        .        V
             .        .        V
349          .        .       RT4
             .        .        .
             .        .        .
352          .        .        .     RUSWL6
             .        .        .        .
             .        .        .        .
358          .     COMB2.......................
             .        V
             .        V
360          .       RT5
             .        .
             .        .
363          .        .     RUSWL7
             .        .        .
             .        .        .
369          .        .        .     RUSWL8
             .        .        .        .
             .        .        .        .
375          .        .        .        .     RUSWL9
             .        .        .        .        .
             .        .        .        .        .
381       SW34.............................................
             V
             V
383       RT35
             .
             .
386          .     SECT9
             .        .
             .        .
392          .        .     SECT10
             .        .        .
             .        .        .
398          .        .        .     SECT10
             .        .        .        V
             .        .        .        V
404          .        .        .       RT1
             .        .        .        .
             .        .        .        .
407          .     COMB1.......................
```

```
                 V
                 V
410            RT2
                 .
413              .      SECT16
                 .          .
419              .          .      SECT15
                 .          .          .
425          COMB2.......................
                 V
                 V
428            RT3
                 .
431              .      SECT21
                 .          .
437              .          .      SECT22
                 .          .          .
443          COMB3.......................
                 V
                 V
446            RT4
                 .
449              .      SECT12
                 .          V
                 .          V
455              .        RT5
                 .          .
458              .          .      SECT11
                 .          .          .
464              .       COMB4...........
                 .          V
                 .          V
467              .        RT6
                 .          .
470              .          .      SECT10
                 .          .          .
476              .       COMB5...........
                 .          V
                 .          V
479              .        RT7
                 .          .
482              .          .      SECT13
                 .          .          V
                 .          .          V
488              .          .        RT8
                 .          .          .
491              .          .          .      SECT14
                 .          .          .          .
497              .          .          .          .      SECT15
                 .          .          .          .          .
503              .       COMB6.......................................
                 .          V
```

```
                 .         .         V
507              .         .       RT9
                 .         .         .
510              .         .         .     SECT24
                 .         .         .         V
                 .         .         .         V
516              .         .         .       RT10
                 .         .         .         .
519              .         .         .         .     SECT23
                 .         .         .         .         .
525              .         .         .         .         .     SECT22
                 .         .         .         .         .         .
531              .         .       COMB7.......................................
                 .         .         V
                 .         .         V
535              .         .       RT11
                 .         .         .
538              .         .         .     SECT26
                 .         .         .         .
544              .         .       COMB8............
                 .         .         V
                 .         .         V
547              .         .       RT12
                 .         .         .
550              .         .         .     SECT28
                 .         .         .         .
556              .         .         .         .     SECT27
                 .         .         .         .         .
562              .       COMB9.......................................
                 .         V
                 .         V
566              .       RT13
                 .         .
569              .         .     SECT34
                 .         .         .
575          COMBB.........................
                 .
578              .     SECT33
                 .         .
584          COMBB............
                 .
587              .     SECT16
                 .         V
                 .         V
593              .       RT1
                 .         .
596              .         .     SECT20
                 .         .         .
602              .       COMB1............
                 .         V
                 .         V
```

```
605          .        RT2
             .          .
608          .          .      SECT29
             .          .          .
614          .      COMB2............
             .         V
             .         V
617          .        RT3
             .          .
620          .          .      SECT16
             .          .          V
             .          .          V
626          .          .        RT4
             .          .          .
629          .          .          .      SECT21
             .          .          .          .
635          .          .      COMB3............
             .          .          V
             .          .          V
638          .          .        RT5
             .          .          .
641          .          .          .      SECT28
             .          .          .          .
647          .          .      COMB4............
             .          .          V
             .          .          V
650          .          .        RT6
             .          .          .
653          .          .          .      SECT32
             .          .          .          .
659          .     OUTLTC......................
             .          .
663          .          .      SECT33
             .          .          .
669          .      WCHAN............
             .          .
672       INBB............
             V
             V
676     RFBAY
             .
691          .------->     RCB
688     DIVERT
             V
             V
694     RBAS
             .
706          .          .<-------     RCB
703          .     RRCB
             .          .
707     OUTFL............
             V
```

```
                V
711        Rtgila
                .
                .
714             .      GilaAe
                .           .
                .           .
720        CGilaE............
                V
                V
723         RBI10
                .
                .
726             .      GilaAw
                .           .
                .           .
732        CGILAW............
                .
                .
735             .         M1
                .          V
                .          V
739             .       RtC1
                .           .
                .           .
745             .           .         M2
                .           .          V
                .           .          V
750             .           .      RtC2
                .           .           .
                .           .           .
756             .           .           .         A1
                .           .           .          .
                .           .           .          .
761             .      COMB1.......................
                .           .
                .           .
766             .           .-------->   Splt1
764             .      Splt1
                .          V
                .          V
769             .       RtC3
                .           .
                .           .
775             .           .         M3
                .           .          V
                .           .          V
780             .           .      RtC4
                .           .           .
                .           .           .
786             .           .           .         A2
                .           .           .          .
                .           .           .          .
791             .      COMB2.......................
                .          V
                .          V
794             .       RtC5
                .           .
                .           .
800             .           .         M4
                .           .          V
                .           .          V
805             .           .      RtR1
                .           .           .
                .           .           .
811             .           .           .         A3
                .           .           .          .
```

```
816                                                A4
821          COMB3.................................
826                  ------->   RET1
824          RET1
                V
                V
829          RtC6
835                        A5
840          COMB4............
845                  ------->   Splt2
843          Splt2
                V
                V
848          RtC7
854                       A6b
                           V
                           V
859                      RtR2
865                                   R1
870                     Comb5............
875                            ------->   DivR1
873                     DivR1
878                                  A6a
                                      V
                                      V
883                                 RtC8
889                                                A7
894          Comb6.................................
                V
                V
897          RtC9
903                        A8
908                                   R2
913                                                A29
```

```
918          COMB7.................................
                V
                V
921          RtC10
                .
                .
927                A9
                   .
                   .
932                .        A30
                   .          .
                   .          .
937          COMB8.......................
                .
                .
942             .-------->  Splt3
940          SPLT3
                V
                V
945          RtC11
                .
                .
951                A11
                   .
                   .
956                .        A12
                   .          .
                   .          .
963                .          .-------->  DvA12
961                .      DvA12
                   .          .
                   .          .
966             Comb9............
                   V
                   V
969             RtR3
                   .
                   .
975                .        A10
                   .          .
                   .          .
982                .          .-------->  DvA10
980                .      DvA10
                   .          .
                   .          .
985                .          .         R3
                   .          .          .
                   .          .          .
990                .          .          .         R4
                   .          .          .          .
                   .          .          .          .
995          Comb10.............................................
                V
                V
998          RtC12
                .
                .
1006            .<-------   DivR1
1004         RetR1
                V
                V
1007         RtR4
                .
                .
1013            .        R6
                .          .
                .          .
```

```
1018                                A13
                                     .
1025                                 .-------> DvA13
1023                                DvA13
                                     .
1028                    Comb11.......
                           V
                           V
1031                    RtC13
                           .
1037                           A14
                               .
1044                           .-------> DvA14
1042                           DvA14
                               .
1047                                R7a
                                     .
1052                    Comb12.......
                           V
                           V
1055                    RtC14
                           .
1061                           A15
                               .
1066                                A31
                                     .
1071                                 .        R7b
                                     .         .
1076                                 .         .        R5
                                     .         .         .
1081                    Comb13.......................................
                           V
                           V
1084                    RtC15
                           V
                           V
1090                    RtR5
                           .
1096                       R12A
                           .
1101                           A16
                               .
1108                           .-------> DvA16
1106                           DvA16
                               .
1111                                A17
                                     .
1116                    Comb14.......
                           V
                           V
1119                    RtR6
```

```
                .          .
                .          .
1127            .          .-------> 48-Est
1125            .     48-Sth
                .          .
                .          .
1130            .          .       A18
                .          .        .
                .          .        .
1135            .          .        .         R8
                .          .        .         .
                .          .        .         .
1140            .          .    Comb15.........
                .          .        V         .
                .          .        V         .
1143            .          .     RtR7         .
                .          .        .         .
                .          .        .         .
1149            .          .        .         R9
                .          .        .         .
                .          .        .         .
1154            .          .        .         .        A19
                .          .        .         .         .
                .          .        .         .         .
1159            .          .    Comb16.......................
                .          .        V         .         .
                .          .        V         .         .
1162            .          .     RtR8         .         .
                .          .        .         .         .
                .          .        .         .         .
1168            .          .        .        A20        .
                .          .        .         .         .
                .          .        .         .         .
1175            .          .        .         .-------> DvA20
1173            .          .        .      DvA20        .
                .          .        .         .         .
                .          .        .         .         .
1178            .          .        .         .        R10
                .          .        .         .         .
                .          .        .         .         .
1183            .          .    Comb17.......................
                .          .        V         .         .
                .          .        V         .         .
1186            .          .     RtR9         .         .
                .          .        .         .         .
                .          .        .         .         .
1192            .          .        .        A21        .
                .          .        .         .         .
                .          .        .         .         .
1199            .          .        .         .-------> 21-Est
1197            .          .        .     21-Sth        .
                .          .        .         V         .
                .          .        .         V         .
1202            .          .        .      RtR10        .
                .          .        .         .         .
                .          .        .         .         .
1208            .          .        .         .        R11
                .          .        .         .         .
                .          .        .         .         .
1213            .          .        .         .         .        A22
                .          .        .         .         .         .
                .          .        .         .         .         .
1220            .          .        .         .         .         .-------> DvA22
1218            .          .        .         .         .      DvA22
                .          .        .         .         .         .
                .          .        .         .         .         .
1223            .          .        .         .         .         .       R12b
```

```
1230                                                                  <------- 48-Est
1228                                                          Retn48
1231                  Comb18.......................................
1236                         -------> RayEst
1234                  RaySth
1239            Comb19............
                     V
                     V
1242             RtC16
1248                     A27
                          V
                          V
1253                  RtC17
1259                          A28
1264                                      R13
1269            Comb20...................................
                     V
                     V
1272              RET2
1281                     -------> South
1279              East
                     V
                     V
1286            RtEAST
1292                          C
1297             COMBC............
                     V
                     V
1300               RtC
1306                          D
                              V
                              V
1311                  ROUTED
1317                                  E
                                      V
                                      V
1322                              ROUTEE
1328             COMBE........................
                     V
```

```
                 V
1331          RTEE
                 .
                 .
1337             .      DA522A
                 .          .
                 .          .
1341          AD522A............
                 V
                 V
1344          RT522A
                 .
                 .
1350             .      DA522B
                 .          .
                 .          .
1354          AD522B............
                 V
                 V
1357          RT522B
                 .
                 .
1365             .          .<-------  21-Est
1363             .      Retn21
                 .          V
                 .          V
1366             .       RtP1
                 .          .
                 .          .
1372             .          .        A25
                 .          .          .
                 .          .          .
1377             .      Comb21............
                 .          V
                 .          V
1380             .       RtP2
                 .          .
                 .          .
1386             .          .        A23
                 .          .          .
                 .          .          .
1393             .          .          .-------->   DvA23
1391             .          .      DvA23
                 .          .          V
                 .          .          V
1396             .          .      RtC18
                 .          .          .
                 .          .          .
1402             .          .          .        A24
                 .          .          .          .
                 .          .          .          .
1407             .      Comb22......................
                 .          V
                 .          V
1410             .       RET3
                 .          V
                 .          V
1417             .      RtC19
                 .          .
                 .          .
1423             .          .        A26
                 .          .          .
                 .          .          .
1430             .          .          .-------->   DvA26
1428             .          .      DvA26
                 .          .          .
                 .          .          .
```

```
1435                                  .<-------  RayEst
1433                            RtnRay
                                     V
                                     V
1436                             RtR11
                                     .
                                     .
1442                                 .        R14
                                     .         .
                                     .         .
1447                     Comb23.................
                                     .
                                     .
1452                     .-------> DIVBOX
1450                     DIV520
                              V
                              V
1455                      RTE23
                                     .
                                     .
1462                                 .<-------  DIVBOX
1461                          DIVBOX
                                     .
                                     .
1463                     ADDBOX............
                                     .
                                     .
1466                                 VA1
                                     .
                                     .
1471                     COMBA1............
                              V
                              V
1473                      RTEA1
                                     .
                                     .
1479                                 VA2
                                     .
                                     .
1484                      COMBA............
                              V
                              V
1487                     STORA2
                              V
                              V
1492                      RTEA2
                                     .
                                     .
1498                                 B
                                     .
                                     .
1503                      COMBB............
                              V
                              V
1506                        RtB
                                     .
                                     .
1512                                 F
                                     .
                                     .
1517                                 .       R200
                                     .          V
                                     .          V
1522                                 .     ROUTER
                                     .          .
                                     .          .
1528                      COMBF......................
```

```
                 .          .          V
                 .          .          V
1531             .          .       RTEF
                 .          .          .
                 .          .          .
1537             .          .          .      DA522C
                 .          .          .          .
                 .          .          .          .
1541             .          .     AD522C...........
                 .          .          V
                 .          .          V
1544             .          .     RT522C
                 .          .          .
                 .          .          .
1550             .          .          .      DA522D
                 .          .          .          .
                 .          .          .          .
1554             .          .     AD522D...........
                 .          .          V
                 .          .          V
1557             .          .     RT522D
                 .          .          .
                 .          .          .
1563             .          .          .      DA522E
                 .          .          .          .
                 .          .          .          .
1567             .     AD522E.......................
                 .          .
                 .          .
1570             .          .     DA513
                 .          .          .
                 .          .          .
1574             .          .          .      DA514
                 .          .          .          .
                 .          .          .          .
1578             .          .          .          .      DA515
                 .          .          .          .          .
                 .          .          .          .          .
1582             .          .     AD515........................
                 .          .          V
                 .          .          V
1584             .          .     RT515
                 .          .          .
                 .          .          .
1589             .          .          .      DA517
                 .          .          .          .
                 .          .          .          .
1595             .          .          .          .          .<-------   South
1593             .          .          .          .      South
                 .          .          .          .          .
                 .          .          .          .          .
1596             .          .     AD517........................
                 .          .          V
                 .          .          V
1598             .          .     RT517
                 .          .          .
                 .          .          .
1603             .          .          .      DA518
                 .          .          .          .
                 .          .          .          .
1607             .          .     AD518............
                 .          .          V
                 .          .          V
1609             .          .     RT518
                 .          .          .
                 .          .          .
1615             .          .          .      DA519A
```

```
                                          V
                                          V
1619                                   RT519A
                                          .
1625                                      .        DA519B
                                          .           .
1629                                      .           .
                                AD519B.....................
                                     V
                                     V
1632                            RT519B
                                     .
                                     .
1638                                 .     DA519C
                                          V
                                          V
1642                                 .     RT519C
                                          .
1648                                      .        DA519D
                                          .           .
1652                                      .           .
                                AD519D.....................
                                     V
                                     V
1655                            RT519D
                                     .
                                     .
1661                                 .     DA519E
                                          V
                                          V
1665                                 .     RT519E
                                          .
1671                                      .        DA519F
                                          .           .
1675                                 .     AD519F...........
                                          .
1678                                      .        DA519G
                                          .           .
1682                            AD519G.....................
                                     V
                                     V
1685                            RTI-10
                                     .
                                     .
1691                                 .        B1
                                     .        V
                                     .        V
1696                                 .     RTEB1
                                     .        .
                                     .        .
1702                            ADI-10...........
                                     .
                                     .
1705                                 .        B15
                                     .        .
                                     .        .
1710                            ADBA15...........
                                     .
                                     .
1713                                 .        PMP
                                     .        .
```

```
                .         .
 1731           .      ADPMP............
                .         .
                .         .
 1735           .         .-------->   DIVFF
 1733           .      B15FF
                .         .
                .         .
 1741           .         .-------->  DIVB15
 1738           .     B15RCB
                .         .
                .         .
 1744       I10W ............
                V
                V
 1747       RI10W
                V
                V
 1753      R1Gila
                V
                V
 1760      R2Gila
                V
                V
 1767      R3Gila
```

(***) RUNOFF ALSO COMPUTED AT THIS LOCATION

```
1****************************************
 *                                      *
 *   FLOOD HYDROGRAPH PACKAGE  (HEC-1)  *
 *             JUN 09 1992              *
 *           VERSION 4.0.3E             *
 *                                      *
 *  RUN DATE  05/26/98  TIME  16:55:28  *
 *                                      *
 ****************************************
```

```
****************************************
*                                      *
*    U.S. ARMY CORPS OF ENGINEERS      *
*    HYDROLOGIC ENGINEERING CENTER     *
*          609 SECOND STREET           *
*       DAVIS, CALIFORNIA 95616        *
*           (916) 551-1748             *
*                                      *
****************************************
```

FN: SVRD05~2.DAT May 1998 ADAPTED FROM SEVRDS.DAT (HDR 4/97)
This model has two revisions from the previous model.
1. Revised BASIN B and Outlet Channel routings to accomodate P-MIP
   project overflows from the Gila Drain as described below.
2. Revised Basin 15 from detention to retention so that flows will not
   bypassed to the SEVRDS Channel during the event. See more below.

****

HISTORY THIS MODEL: This model is a modification of ALT2c.DAT developed by HDR for the Alternative Study for SEVRDS by HDR in June 1995. SMF48TH.DAT(PRICE5) on the West side of I-10 was included. GILA1B.DAT(Gila Drain Floodway Model) was also included in this model. ALT2c was a composite of HEC1 models from Price GEC Gila Drain Alternati Drainage Report,HDR,Feb 1993(Price/Santan/Gila Drain GILADRY.DAT model), South Mountain Freeway Concept Drainage Report, HDR, Feb 1993,(Segment V PRICE5.DAT model modified to SMF48th.DAT described below), and Gila Drain Floodway Master Plan Report, Feb 1993(GILA1B.DAT model). The original model was developed for the Price Freeway drainage system as reported in "Hydrology Study: Price Expressway", ADOT Contract 88-24, Dec. 1989. The model criteria is provided in that report. The basic model has not changed since 1989. The model continues to be the model record because the model was used to design the upper part of the SEVRDS/Santan Channel system on Price Freeway for the Galveston to Frye Interim Project which included construction of Basin G and the outlet to the Santan Channel.

****

BASIN B DESIGN. Basin B was configured as a bypass basin in 1993. With

```
                                the formation of SEVRDS, the Basin was reconfigured as a multi-celled
                                basin with first flush containment cell, a treatment cell and a large
                                retention cell to capture flows above 800 cfs.("Initial Drainage Report
                                Santan Freeway:56th St to Price Rd and Gila Drain Floodway to Basin B,"
                                Wood Patel & Assoc., Sept. 12, 1996.)
                                HDR prepared a detailed design of the Basin B complex in Feb. 1997.
                                The size of Basin B was increased from 385(9/96) to 450 af to limit bypa
                                flows to 900 cfs. This operation maximized the available storage on-site
                                and required moving the outlet channel to the west side of the Gila
                                Drain.  This most recent model further optimized storage on site in
                                in Basin B to limit bypass flows to 800 cfs to allow Gila Drain
                                flows of up to 150 cfs to enter the outfall channel at the GRIC boundary

                                Basin B site has three basins: 1.First flush equalization/sedimentation
                                basin stores first 39 ac-ft of inflow into system.  2. A two-celled Watr
                                Quality Basin treats the first-flush post-event. This basin is not
                                included in the model. 3. An off-line retention basin, Basin B, has a
                                capacity of 450 ac-ft.  Operation: The first flush is conveyed in the
                                Forebay Channel to Eq. Basin. Additional flow up to 804 cfs is bypassed
                                thru 3-10x4 control RCB to Outfall Chan.  At about 600 cfs, flow begins
                                to spill over Basin B weir.  At 100-yr peak of 2895 cfs, 804 cfs is
                                discharging to RCB and 2091 cfs is overflowing 1000' weir into Basin B
                                ***********************************************************************
                                SMF48th.DAT Model of the area west of I-10 was significantly
                                changed in Feb. 1996 for the 48th St. ID study for Phoenix, including
                                the reconfiguration of Basin 15 as a retention basin as mentioned above.
                                A future connection of the 48th St.-Basin 15 to SEVRDS would be a pipe
                                to dewater Basin 15 post-event.  Basin 15 will not increase design
                                discharge of the SEVRDS Channel during the event.
                                ***********************************************************************


                                INITIAL ABSTRACTION USED TO REPRESENT DEVELOPMENT RETENTION PROVIDED
                                100 YEAR - 24 HOUR STORM
                                HDR - PHOENIX
                                FILENAME: SVRD0598.DAT 10/97 Version

  64 IO          OUTPUT CONTROL VARIABLES
                       IPRNT           5  PRINT CONTROL
                       IPLOT           0  PLOT CONTROL
                       QSCAL          0.  HYDROGRAPH PLOT SCALE

     IT          HYDROGRAPH TIME DATA
                        NMIN           5  MINUTES IN COMPUTATION INTERVAL
                       IDATE      1    0  STARTING DATE
                       ITIME        0000  STARTING TIME
                          NQ        1000  NUMBER OF HYDROGRAPH ORDINATES
                      NDDATE      4    0  ENDING DATE
                      NDTIME        1115  ENDING TIME
                       ICENT          19  CENTURY MARK

                  COMPUTATION INTERVAL    0.08 HOURS
                       TOTAL TIME BASE   83.25 HOURS

          ENGLISH UNITS
               DRAINAGE AREA          SQUARE MILES
               PRECIPITATION DEPTH    INCHES
               LENGTH, ELEVATION      FEET
               FLOW                   CUBIC FEET PER SECOND
               STORAGE VOLUME         ACRE-FEET
               SURFACE AREA           ACRES
               TEMPERATURE            DEGREES FAHRENHEIT
MANE2 NPLAN,NSTM       1      0
MANE2 NPLAN,NSTM       1      0
MANE2 NPLAN,NSTM       1      0
MANE2 NPLAN,NSTM       1      0
MANE2 NPLAN,NSTM       1      0
```

```
MANE2 NPLAN,NSTM       1      0
MANE2 NPLAN,NSTM       1      0
MANE2 NPLAN,NSTM       1      0
MANE2 NPLAN,NSTM       1      0
MANE2 NPLAN,NSTM       1      0
MANE2 NPLAN,NSTM       1      0
MANE2 NPLAN,NSTM       1      0
MANE2 NPLAN,NSTM       1      0
MANE2 NPLAN,NSTM       1      0
MANE2 NPLAN,NSTM       1      0
MANE2 NPLAN,NSTM       1      0
MANE2 NPLAN,NSTM       1      0
MANE2 NPLAN,NSTM       1      0
MANE2 NPLAN,NSTM       1      0
MANE2 NPLAN,NSTM       1      0
MANE2 NPLAN,NSTM       1      0
MANE2 NPLAN,NSTM       1      0
MANE2 NPLAN,NSTM       1      0
MANE2 NPLAN,NSTM       1      0
MANE2 NPLAN,NSTM       1      0
MANE2 NPLAN,NSTM       1      0
MANE2 NPLAN,NSTM       1      0
MANE2 NPLAN,NSTM       1      0
MANE2 NPLAN,NSTM       1      0
MANE2 NPLAN,NSTM       1      0
MANE2 NPLAN,NSTM       1      0
MANE2 NPLAN,NSTM       1      0
MANE2 NPLAN,NSTM       1      0
MANE2 NPLAN,NSTM       1      0
MANE2 NPLAN,NSTM       1      0
MANE2 NPLAN,NSTM       1      0
MANE2 NPLAN,NSTM       1      0
MANE2 NPLAN,NSTM       1      0
MANE2 NPLAN,NSTM       1      0
MANE2 NPLAN,NSTM       1      0
MANE2 NPLAN,NSTM       1      0
MANE2 NPLAN,NSTM       1      0
MANE2 NPLAN,NSTM       1      0
MANE2 NPLAN,NSTM       1      0
MANE2 NPLAN,NSTM       1      0
MANE2 NPLAN,NSTM       1      0
MANE2 NPLAN,NSTM       1      0
MANE2 NPLAN,NSTM       1      0
MANE2 NPLAN,NSTM       1      0

 *** *** *** *** *** *** *** *** *** *** *** *** *** *** *** *** *** *** *** *** *** *** *** *** *** *** *** *** *** *** *** *** *** *** ***

            **************
            *            *
  672 KK    *      INBB  *
            *            *
            **************

  674 KO          OUTPUT CONTROL VARIABLES
                        IPRNT          2  PRINT CONTROL
                        IPLOT          0  PLOT CONTROL
                        QSCAL         0.  HYDROGRAPH PLOT SCALE

  675 HC          HYDROGRAPH COMBINATION
                        ICOMP          2  NUMBER OF HYDROGRAPHS TO COMBINE
                                                                  ***
MANE2 NPLAN,NSTM       1      0
 ************************************************************************************************************************************************

                                                  HYDROGRAPH AT STATION     INBB
                                                      SUM OF  2 HYDROGRAPHS
```

DA	MON	HRMN	ORD	FLOW	DA	MON	HRMN	ORD	FLOW	DA	MON	HRMN	ORD	FLOW	DA	MON	HRMN	ORD	FLOW
1		0000	1	0.	1		2050	251	852.	2		1740	501	225.	3		1430	751	46.
1		0005	2	0.	1		2055	252	853.	2		1745	502	222.	3		1435	752	46.
1		0010	3	0.	1		2100	253	854.	2		1750	503	203.	3		1440	753	46.
1		0015	4	0.	1		2105	254	855.	2		1755	504	167.	3		1445	754	46.
1		0020	5	0.	1		2110	255	855.	2		1800	505	125.	3		1450	755	46.
1		0025	6	0.	1		2115	256	856.	2		1805	506	93.	3		1455	756	46.
1		0030	7	0.	1		2120	257	856.	2		1810	507	101.	3		1500	757	46.
1		0035	8	0.	1		2125	258	856.	2		1815	508	173.	3		1505	758	46.
1		0040	9	0.	1		2130	259	856.	2		1820	509	217.	3		1510	759	46.
1		0045	10	0.	1		2135	260	856.	2		1825	510	224.	3		1515	760	46.
1		0050	11	0.	1		2140	261	854.	2		1830	511	224.	3		1520	761	46.
1		0055	12	0.	1		2145	262	824.	2		1835	512	223.	3		1525	762	46.
1		0100	13	0.	1		2150	263	741.	2		1840	513	223.	3		1530	763	46.
1		0105	14	0.	1		2155	264	634.	2		1845	514	223.	3		1535	764	46.
1		0110	15	0.	1		2200	265	566.	2		1850	515	223.	3		1540	765	46.
1		0115	16	0.	1		2205	266	609.	2		1855	516	223.	3		1545	766	46.
1		0120	17	0.	1		2210	267	752.	2		1900	517	223.	3		1550	767	46.
1		0125	18	0.	1		2215	268	837.	2		1905	518	223.	3		1555	768	46.
1		0130	19	0.	1		2220	269	856.	2		1910	519	222.	3		1600	769	46.
1		0135	20	0.	1		2225	270	870.	2		1915	520	222.	3		1605	770	46.
1		0140	21	0.	1		2230	271	869.	2		1920	521	222.	3		1610	771	46.
1		0145	22	0.	1		2235	272	857.	2		1925	522	222.	3		1615	772	46.
1		0150	23	0.	1		2240	273	851.	2		1930	523	222.	3		1620	773	46.
1		0155	24	0.	1		2245	274	849.	2		1935	524	222.	3		1625	774	46.
1		0200	25	0.	1		2250	275	848.	2		1940	525	222.	3		1630	775	46.
1		0205	26	0.	1		2255	276	846.	2		1945	526	218.	3		1635	776	46.
1		0210	27	0.	1		2300	277	845.	2		1950	527	201.	3		1640	777	46.
1		0215	28	0.	1		2305	278	844.	2		1955	528	164.	3		1645	778	46.
1		0220	29	0.	1		2310	279	842.	2		2000	529	122.	3		1650	779	46.
1		0225	30	0.	1		2315	280	841.	2		2005	530	90.	3		1655	780	46.
1		0230	31	0.	1		2320	281	839.	2		2010	531	97.	3		1700	781	46.
1		0235	32	0.	1		2325	282	837.	2		2015	532	164.	3		1705	782	46.
1		0240	33	0.	1		2330	283	836.	2		2020	533	215.	3		1710	783	46.
1		0245	34	0.	1		2335	284	835.	2		2025	534	221.	3		1715	784	46.
1		0250	35	0.	1		2340	285	838.	2		2030	535	221.	3		1720	785	46.
1		0255	36	0.	1		2345	286	816.	2		2035	536	221.	3		1725	786	46.
1		0300	37	0.	1		2350	287	730.	2		2040	537	220.	3		1730	787	46.
1		0305	38	0.	1		2355	288	610.	2		2045	538	220.	3		1735	788	46.
1		0310	39	0.	2		0000	289	523.	2		2050	539	220.	3		1740	789	46.
1		0315	40	0.	2		0005	290	559.	2		2055	540	220.	3		1745	790	46.
1		0320	41	0.	2		0010	291	711.	2		2100	541	220.	3		1750	791	46.
1		0325	42	0.	2		0015	292	799.	2		2105	542	220.	3		1755	792	46.
1		0330	43	0.	2		0020	293	810.	2		2110	543	220.	3		1800	793	46.
1		0335	44	0.	2		0025	294	805.	2		2115	544	220.	3		1805	794	46.
1		0340	45	0.	2		0030	295	800.	2		2120	545	220.	3		1810	795	46.
1		0345	46	0.	2		0035	296	794.	2		2125	546	220.	3		1815	796	46.
1		0350	47	0.	2		0040	297	787.	2		2130	547	220.	3		1820	797	46.
1		0355	48	0.	2		0045	298	779.	2		2135	548	219.	3		1825	798	46.
1		0400	49	0.	2		0050	299	771.	2		2140	549	219.	3		1830	799	46.
1		0405	50	0.	2		0055	300	763.	2		2145	550	216.	3		1835	800	46.
1		0410	51	0.	2		0100	301	754.	2		2150	551	198.	3		1840	801	46.
1		0415	52	0.	2		0105	302	745.	2		2155	552	162.	3		1845	802	46.
1		0420	53	0.	2		0110	303	736.	2		2200	553	121.	3		1850	803	46.
1		0425	54	0.	2		0115	304	727.	2		2205	554	89.	3		1855	804	46.
1		0430	55	0.	2		0120	305	718.	2		2210	555	92.	3		1900	805	46.
1		0435	56	0.	2		0125	306	708.	2		2215	556	168.	3		1905	806	46.
1		0440	57	0.	2		0130	307	699.	2		2220	557	212.	3		1910	807	46.
1		0445	58	0.	2		0135	308	690.	2		2225	558	219.	3		1915	808	46.
1		0450	59	0.	2		0140	309	678.	2		2230	559	219.	3		1920	809	46.
1		0455	60	0.	2		0145	310	643.	2		2235	560	218.	3		1925	810	46.
1		0500	61	0.	2		0150	311	560.	2		2240	561	218.	3		1930	811	46.
1		0505	62	0.	2		0155	312	454.	2		2245	562	218.	3		1935	812	46.

1	0510	63	0.	*	2	0200	313	373.	*	2	2250	563	218.	*	3	1940	813	46.
1	0515	64	0.	*	2	0205	314	381.	*	2	2255	564	218.	*	3	1945	814	46.
1	0520	65	0.	*	2	0210	315	519.	*	2	2300	565	218.	*	3	1950	815	46.
1	0525	66	0.	*	2	0215	316	603.	*	2	2305	566	218.	*	3	1955	816	46.
1	0530	67	0.	*	2	0220	317	616.	*	2	2310	567	218.	*	3	2000	817	46.
1	0535	68	0.	*	2	0225	318	611.	*	2	2315	568	218.	*	3	2005	818	46.
1	0540	69	0.	*	2	0230	319	604.	*	2	2320	569	218.	*	3	2010	819	46.
1	0545	70	0.	*	2	0235	320	597.	*	2	2325	570	218.	*	3	2015	820	46.
1	0550	71	0.	*	2	0240	321	591.	*	2	2330	571	217.	*	3	2020	821	46.
1	0555	72	0.	*	2	0245	322	584.	*	2	2335	572	217.	*	3	2025	822	46.
1	0600	73	0.	*	2	0250	323	578.	*	2	2340	573	217.	*	3	2030	823	46.
1	0605	74	0.	*	2	0255	324	571.	*	2	2345	574	214.	*	3	2035	824	46.
1	0610	75	0.	*	2	0300	325	565.	*	2	2350	575	197.	*	3	2040	825	46.
1	0615	76	0.	*	2	0305	326	558.	*	2	2355	576	161.	*	3	2045	826	46.
1	0620	77	0.	*	2	0310	327	552.	*	3	0000	577	120.	*	3	2050	827	46.
1	0625	78	0.	*	2	0315	328	546.	*	3	0005	578	88.	*	3	2055	828	46.
1	0630	79	0.	*	2	0320	329	539.	*	3	0010	579	88.	*	3	2100	829	46.
1	0635	80	0.	*	2	0325	330	533.	*	3	0015	580	158.	*	3	2105	830	46.
1	0640	81	0.	*	2	0330	331	527.	*	3	0020	581	210.	*	3	2110	831	46.
1	0645	82	0.	*	2	0335	332	521.	*	3	0025	582	216.	*	3	2115	832	46.
1	0650	83	0.	*	2	0340	333	515.	*	3	0030	583	216.	*	3	2120	833	46.
1	0655	84	0.	*	2	0345	334	492.	*	3	0035	584	216.	*	3	2125	834	46.
1	0700	85	0.	*	2	0350	335	428.	*	3	0040	585	216.	*	3	2130	835	46.
1	0705	86	0.	*	2	0355	336	337.	*	3	0045	586	215.	*	3	2135	836	46.
1	0710	87	0.	*	2	0400	337	264.	*	3	0050	587	215.	*	3	2140	837	46.
1	0715	88	0.	*	2	0405	338	258.	*	3	0055	588	214.	*	3	2145	838	46.
1	0720	89	0.	*	2	0410	339	361.	*	3	0100	589	206.	*	3	2150	839	46.
1	0725	90	0.	*	2	0415	340	454.	*	3	0105	590	183.	*	3	2155	840	46.
1	0730	91	0.	*	2	0420	341	472.	*	3	0110	591	149.	*	3	2200	841	46.
1	0735	92	0.	*	2	0425	342	469.	*	3	0115	592	113.	*	3	2205	842	46.
1	0740	93	0.	*	2	0430	343	463.	*	3	0120	593	84.	*	3	2210	843	46.
1	0745	94	0.	*	2	0435	344	458.	*	3	0125	594	68.	*	3	2215	844	46.
1	0750	95	0.	*	2	0440	345	453.	*	3	0130	595	61.	*	3	2220	845	46.
1	0755	96	0.	*	2	0445	346	448.	*	3	0135	596	59.	*	3	2225	846	46.
1	0800	97	0.	*	2	0450	347	444.	*	3	0140	597	59.	*	3	2230	847	46.
1	0805	98	0.	*	2	0455	348	439.	*	3	0145	598	59.	*	3	2235	848	46.
1	0810	99	0.	*	2	0500	349	435.	*	3	0150	599	59.	*	3	2240	849	46.
1	0815	100	0.	*	2	0505	350	430.	*	3	0155	600	56.	*	3	2245	850	46.
1	0820	101	0.	*	2	0510	351	426.	*	3	0200	601	49.	*	3	2250	851	46.
1	0825	102	0.	*	2	0515	352	422.	*	3	0205	602	39.	*	3	2255	852	46.
1	0830	103	0.	*	2	0520	353	417.	*	3	0210	603	31.	*	3	2300	853	46.
1	0835	104	0.	*	2	0525	354	413.	*	3	0215	604	26.	*	3	2305	854	46.
1	0840	105	0.	*	2	0530	355	409.	*	3	0220	605	33.	*	3	2310	855	46.
1	0845	106	0.	*	2	0535	356	405.	*	3	0225	606	50.	*	3	2315	856	46.
1	0850	107	0.	*	2	0540	357	400.	*	3	0230	607	58.	*	3	2320	857	46.
1	0855	108	0.	*	2	0545	358	384.	*	3	0235	608	58.	*	3	2325	858	46.
1	0900	109	0.	*	2	0550	359	339.	*	3	0240	609	58.	*	3	2330	859	46.
1	0905	110	0.	*	2	0555	360	269.	*	3	0245	610	58.	*	3	2335	860	46.
1	0910	111	0.	*	2	0600	361	204.	*	3	0250	611	58.	*	3	2340	861	46.
1	0915	112	0.	*	2	0605	362	186.	*	3	0255	612	58.	*	3	2345	862	46.
1	0920	113	0.	*	2	0610	363	254.	*	3	0300	613	57.	*	3	2350	863	46.
1	0925	114	0.	*	2	0615	364	348.	*	3	0305	614	57.	*	3	2355	864	46.
1	0930	115	0.	*	2	0620	365	368.	*	3	0310	615	57.	*	4	0000	865	46.
1	0935	116	0.	*	2	0625	366	367.	*	3	0315	616	57.	*	4	0005	866	46.
1	0940	117	0.	*	2	0630	367	364.	*	3	0320	617	57.	*	4	0010	867	46.
1	0945	118	0.	*	2	0635	368	360.	*	3	0325	618	57.	*	4	0015	868	46.
1	0950	119	0.	*	2	0640	369	357.	*	3	0330	619	57.	*	4	0020	869	46.
1	0955	120	0.	*	2	0645	370	354.	*	3	0335	620	57.	*	4	0025	870	46.
1	1000	121	0.	*	2	0650	371	350.	*	3	0340	621	57.	*	4	0030	871	46.
1	1005	122	0.	*	2	0655	372	347.	*	3	0345	622	56.	*	4	0035	872	46.
1	1010	123	0.	*	2	0700	373	344.	*	3	0350	623	56.	*	4	0040	873	46.
1	1015	124	0.	*	2	0705	374	341.	*	3	0355	624	54.	*	4	0045	874	46.
1	1020	125	0.	*	2	0710	375	338.	*	3	0400	625	47.	*	4	0050	875	46.
1	1025	126	0.	*	2	0715	376	335.	*	3	0405	626	38.	*	4	0055	876	46.
1	1030	127	0.	*	2	0720	377	332.	*	3	0410	627	29.	*	4	0100	877	46.
1	1035	128	0.	*	2	0725	378	329.	*	3	0415	628	25.	*	4	0105	878	46.
1	1040	129	0.	*	2	0730	379	326.	*	3	0420	629	31.	*	4	0110	879	46.

1	1045	130	0.	*	2	0735	380	323.	*	3	0425	630	50.	*	4	0115	880	46.
1	1050	131	1.	*	2	0740	381	320.	*	3	0430	631	55.	*	4	0120	881	46.
1	1055	132	8.	*	2	0745	382	311.	*	3	0435	632	55.	*	4	0125	882	46.
1	1100	133	15.	*	2	0750	383	277.	*	3	0440	633	55.	*	4	0130	883	46.
1	1105	134	10.	*	2	0755	384	224.	*	3	0445	634	55.	*	4	0135	884	46.
1	1110	135	7.	*	2	0800	385	170.	*	3	0450	635	55.	*	4	0140	885	46.
1	1115	136	5.	*	2	0805	386	143.	*	3	0455	636	55.	*	4	0145	886	46.
1	1120	137	4.	*	2	0810	387	185.	*	3	0500	637	55.	*	4	0150	887	46.
1	1125	138	4.	*	2	0815	388	272.	*	3	0505	638	55.	*	4	0155	888	46.
1	1130	139	5.	*	2	0820	389	301.	*	3	0510	639	55.	*	4	0200	889	46.
1	1135	140	10.	*	2	0825	390	303.	*	3	0515	640	55.	*	4	0205	890	46.
1	1140	141	14.	*	2	0830	391	301.	*	3	0520	641	54.	*	4	0210	891	46.
1	1145	142	27.	*	2	0835	392	300.	*	3	0525	642	54.	*	4	0215	892	46.
1	1150	143	42.	*	2	0840	393	299.	*	3	0530	643	54.	*	4	0220	893	46.
1	1155	144	48.	*	2	0845	394	298.	*	3	0535	644	54.	*	4	0225	894	46.
1	1200	145	50.	*	2	0850	395	296.	*	3	0540	645	54.	*	4	0230	895	46.
1	1205	146	51.	*	2	0855	396	295.	*	3	0545	646	54.	*	4	0235	896	46.
1	1210	147	119.	*	2	0900	397	294.	*	3	0550	647	53.	*	4	0240	897	46.
1	1215	148	352.	*	2	0905	398	293.	*	3	0555	648	51.	*	4	0245	898	46.
1	1220	149	645.	*	2	0910	399	291.	*	3	0600	649	45.	*	4	0250	899	46.
1	1225	150	830.	*	2	0915	400	290.	*	3	0605	650	37.	*	4	0255	900	46.
1	1230	151	964.	*	2	0920	401	289.	*	3	0610	651	29.	*	4	0300	901	46.
1	1235	152	1062.	*	2	0925	402	288.	*	3	0615	652	24.	*	4	0305	902	46.
1	1240	153	1127.	*	2	0930	403	286.	*	3	0620	653	29.	*	4	0310	903	46.
1	1245	154	1151.	*	2	0935	404	285.	*	3	0625	654	44.	*	4	0315	904	46.
1	1250	155	1347.	*	2	0940	405	284.	*	3	0630	655	52.	*	4	0320	905	46.
1	1255	156	1705.	*	2	0945	406	276.	*	3	0635	656	53.	*	4	0325	906	46.
1	1300	157	1978.	*	2	0950	407	250.	*	3	0640	657	53.	*	4	0330	907	46.
1	1305	158	2184.	*	2	0955	408	202.	*	3	0645	658	53.	*	4	0335	908	46.
1	1310	159	2347.	*	2	1000	409	153.	*	3	0650	659	53.	*	4	0340	909	46.
1	1315	160	2513.	*	2	1005	410	121.	*	3	0655	660	53.	*	4	0345	910	46.
1	1320	161	2674.	*	2	1010	411	155.	*	3	0700	661	53.	*	4	0350	911	46.
1	1325	162	2792.	*	2	1015	412	238.	*	3	0705	662	52.	*	4	0355	912	46.
1	1330	163	2863.	*	2	1020	413	270.	*	3	0710	663	52.	*	4	0400	913	46.
1	1335	164	2885.	*	2	1025	414	273.	*	3	0715	664	52.	*	4	0405	914	46.
1	1340	165	2822.	*	2	1030	415	272.	*	3	0720	665	52.	*	4	0410	915	46.
1	1345	166	2652.	*	2	1035	416	271.	*	3	0725	666	52.	*	4	0415	916	46.
1	1350	167	2378.	*	2	1040	417	270.	*	3	0730	667	52.	*	4	0420	917	46.
1	1355	168	2105.	*	2	1045	418	269.	*	3	0735	668	52.	*	4	0425	918	46.
1	1400	169	1955.	*	2	1050	419	268.	*	3	0740	669	52.	*	4	0430	919	46.
1	1405	170	2012.	*	2	1055	420	267.	*	3	0745	670	52.	*	4	0435	920	46.
1	1410	171	2138.	*	2	1100	421	266.	*	3	0750	671	52.	*	4	0440	921	46.
1	1415	172	2136.	*	2	1105	422	265.	*	3	0755	672	51.	*	4	0445	922	46.
1	1420	173	2070.	*	2	1110	423	264.	*	3	0800	673	45.	*	4	0450	923	46.
1	1425	174	2019.	*	2	1115	424	263.	*	3	0805	674	36.	*	4	0455	924	46.
1	1430	175	1981.	*	2	1120	425	261.	*	3	0810	675	28.	*	4	0500	925	46.
1	1435	176	1967.	*	2	1125	426	260.	*	3	0815	676	22.	*	4	0505	926	46.
1	1440	177	1952.	*	2	1130	427	259.	*	3	0820	677	24.	*	4	0510	927	46.
1	1445	178	1911.	*	2	1135	428	258.	*	3	0825	678	46.	*	4	0515	928	46.
1	1450	179	1848.	*	2	1140	429	257.	*	3	0830	679	51.	*	4	0520	929	46.
1	1455	180	1783.	*	2	1145	430	252.	*	3	0835	680	51.	*	4	0525	930	46.
1	1500	181	1737.	*	2	1150	431	229.	*	3	0840	681	51.	*	4	0530	931	46.
1	1505	182	1685.	*	2	1155	432	186.	*	3	0845	682	51.	*	4	0535	932	46.
1	1510	183	1625.	*	2	1200	433	141.	*	3	0850	683	50.	*	4	0540	933	46.
1	1515	184	1575.	*	2	1205	434	108.	*	3	0855	684	50.	*	4	0545	934	46.
1	1520	185	1531.	*	2	1210	435	130.	*	3	0900	685	50.	*	4	0550	935	46.
1	1525	186	1491.	*	2	1215	436	212.	*	3	0905	686	50.	*	4	0555	936	46.
1	1530	187	1464.	*	2	1220	437	245.	*	3	0910	687	50.	*	4	0600	937	46.
1	1535	188	1424.	*	2	1225	438	249.	*	3	0915	688	50.	*	4	0605	938	46.
1	1540	189	1372.	*	2	1230	439	248.	*	3	0920	689	50.	*	4	0610	939	46.
1	1545	190	1304.	*	2	1235	440	247.	*	3	0925	690	50.	*	4	0615	940	46.
1	1550	191	1195.	*	2	1240	441	246.	*	3	0930	691	50.	*	4	0620	941	46.
1	1555	192	1075.	*	2	1245	442	245.	*	3	0935	692	50.	*	4	0625	942	46.
1	1600	193	1000.	*	2	1250	443	244.	*	3	0940	693	49.	*	4	0630	943	46.
1	1605	194	1032.	*	2	1255	444	243.	*	3	0945	694	49.	*	4	0635	944	46.
1	1610	195	1130.	*	2	1300	445	242.	*	3	0950	695	49.	*	4	0640	945	46.
1	1615	196	1155.	*	2	1305	446	241.	*	3	0955	696	48.	*	4	0645	946	46.

1	1620	197	1127.	*	2	1310	447	241.	*	3	1000	697	43.	*	4	0650	947	46.
1	1625	198	1097.	*	2	1315	448	240.	*	3	1005	698	34.	*	4	0655	948	46.
1	1630	199	1074.	*	2	1320	449	239.	*	3	1010	699	27.	*	4	0700	949	46.
1	1635	200	1051.	*	2	1325	450	238.	*	3	1015	700	21.	*	4	0705	950	46.
1	1640	201	1030.	*	2	1330	451	237.	*	3	1020	701	23.	*	4	0710	951	46.
1	1645	202	1010.	*	2	1335	452	237.	*	3	1025	702	37.	*	4	0715	952	46.
1	1650	203	993.	*	2	1340	453	236.	*	3	1030	703	47.	*	4	0720	953	46.
1	1655	204	987.	*	2	1345	454	232.	*	3	1035	704	48.	*	4	0725	954	46.
1	1700	205	972.	*	2	1350	455	212.	*	3	1040	705	48.	*	4	0730	955	46.
1	1705	206	942.	*	2	1355	456	174.	*	3	1045	706	48.	*	4	0735	956	46.
1	1710	207	920.	*	2	1400	457	131.	*	3	1050	707	48.	*	4	0740	957	46.
1	1715	208	903.	*	2	1405	458	99.	*	3	1055	708	48.	*	4	0745	958	46.
1	1720	209	886.	*	2	1410	459	112.	*	3	1100	709	47.	*	4	0750	959	46.
1	1725	210	871.	*	2	1415	460	189.	*	3	1105	710	47.	*	4	0755	960	46.
1	1730	211	855.	*	2	1420	461	227.	*	3	1110	711	47.	*	4	0800	961	46.
1	1735	212	841.	*	2	1425	462	233.	*	3	1115	712	47.	*	4	0805	962	46.
1	1740	213	834.	*	2	1430	463	233.	*	3	1120	713	47.	*	4	0810	963	46.
1	1745	214	834.	*	2	1435	464	232.	*	3	1125	714	47.	*	4	0815	964	46.
1	1750	215	783.	*	2	1440	465	232.	*	3	1130	715	47.	*	4	0820	965	46.
1	1755	216	690.	*	2	1445	466	232.	*	3	1135	716	47.	*	4	0825	966	46.
1	1800	217	628.	*	2	1450	467	232.	*	3	1140	717	46.	*	4	0830	967	46.
1	1805	218	662.	*	2	1455	468	231.	*	3	1145	718	46.	*	4	0835	968	46.
1	1810	219	775.	*	2	1500	469	231.	*	3	1150	719	46.	*	4	0840	969	46.
1	1815	220	838.	*	2	1505	470	231.	*	3	1155	720	46.	*	4	0845	970	46.
1	1820	221	850.	*	2	1510	471	231.	*	3	1200	721	46.	*	4	0850	971	46.
1	1825	222	848.	*	2	1515	472	230.	*	3	1205	722	46.	*	4	0855	972	46.
1	1830	223	844.	*	2	1520	473	230.	*	3	1210	723	46.	*	4	0900	973	46.
1	1835	224	842.	*	2	1525	474	230.	*	3	1215	724	46.	*	4	0905	974	46.
1	1840	225	840.	*	2	1530	475	230.	*	3	1220	725	46.	*	4	0910	975	46.
1	1845	226	840.	*	2	1535	476	230.	*	3	1225	726	46.	*	4	0915	976	46.
1	1850	227	841.	*	2	1540	477	229.	*	3	1230	727	46.	*	4	0920	977	46.
1	1855	228	842.	*	2	1545	478	225.	*	3	1235	728	46.	*	4	0925	978	46.
1	1900	229	844.	*	2	1550	479	208.	*	3	1240	729	46.	*	4	0930	979	46.
1	1905	230	846.	*	2	1555	480	169.	*	3	1245	730	46.	*	4	0935	980	46.
1	1910	231	849.	*	2	1600	481	126.	*	3	1250	731	46.	*	4	0940	981	46.
1	1915	232	863.	*	2	1605	482	95.	*	3	1255	732	46.	*	4	0945	982	46.
1	1920	233	865.	*	2	1610	483	105.	*	3	1300	733	46.	*	4	0950	983	46.
1	1925	234	853.	*	2	1615	484	174.	*	3	1305	734	46.	*	4	0955	984	46.
1	1930	235	849.	*	2	1620	485	223.	*	3	1310	735	46.	*	4	1000	985	46.
1	1935	236	848.	*	2	1625	486	227.	*	3	1315	736	46.	*	4	1005	986	46.
1	1940	237	845.	*	2	1630	487	227.	*	3	1320	737	46.	*	4	1010	987	46.
1	1945	238	819.	*	2	1635	488	227.	*	3	1325	738	46.	*	4	1015	988	46.
1	1950	239	746.	*	2	1640	489	227.	*	3	1330	739	46.	*	4	1020	989	46.
1	1955	240	646.	*	2	1645	490	227.	*	3	1335	740	46.	*	4	1025	990	46.
1	2000	241	579.	*	2	1650	491	227.	*	3	1340	741	46.	*	4	1030	991	46.
1	2005	242	622.	*	2	1655	492	226.	*	3	1345	742	46.	*	4	1035	992	46.
1	2010	243	756.	*	2	1700	493	226.	*	3	1350	743	46.	*	4	1040	993	46.
1	2015	244	829.	*	2	1705	494	226.	*	3	1355	744	46.	*	4	1045	994	46.
1	2020	245	845.	*	2	1710	495	226.	*	3	1400	745	46.	*	4	1050	995	46.
1	2025	246	846.	*	2	1715	496	226.	*	3	1405	746	46.	*	4	1055	996	46.
1	2030	247	847.	*	2	1720	497	226.	*	3	1410	747	46.	*	4	1100	997	46.
1	2035	248	848.	*	2	1725	498	225.	*	3	1415	748	46.	*	4	1105	998	46.
1	2040	249	849.	*	2	1730	499	225.	*	3	1420	749	46.	*	4	1110	999	46.
1	2045	250	850.	*	2	1735	500	225.	*	3	1425	750	46.	*	4	1115	1000	46.
				*					*					*				

****

PEAK FLOW	TIME		MAXIMUM AVERAGE FLOW			
			6-HR	24-HR	72-HR	83.25-HR
+ (CFS)	(HR)					
		(CFS)				
+ 2885.	13.58		1478.	770.	316.	274.
		(INCHES)	0.461	0.962	1.185	1.185
		(AC-FT)	733.	1528.	1883.	1883.

CUMULATIVE AREA = 29.79 SQ MI

```
*** *** *** *** *** *** *** *** *** *** *** *** *** *** *** *** *** *** *** *** *** *** *** *** *** *** *** *** *** *** *** *** ***

          **************
          *            *
676 KK    *    RFBAY   *
          *            *
          **************

683 KO          OUTPUT CONTROL VARIABLES
                     IPRNT          2  PRINT CONTROL
                     IPLOT          0  PLOT CONTROL
                     QSCAL         0.  HYDROGRAPH PLOT SCALE

             HYDROGRAPH ROUTING DATA

684 RS          STORAGE ROUTING
                     NSTPS          1  NUMBER OF SUBREACHES
                      ITYP       STOR  TYPE OF INITIAL CONDITION
                    RSVRIC       0.00  INITIAL CONDITION
                         X       0.00 WORKING R AND D COEFFICIENT

685 SV            STORAGE        0.0      3.0      34.0      35.0      36.0      38.0      44.0      47.0      51.0

686 SE          ELEVATION    1141.00   1150.10   1151.00   1151.30   1152.13   1153.09   1153.70   1154.00   1154.50

687 SQ          DISCHARGE         0.        0.        0.      139.      300.      500.      636.     1497.     3194.
                                                                ***

*** WARNING *** MODIFIED PULS ROUTING MAY BE NUMERICALLY UNSTABLE FOR OUTFLOWS BETWEEN     1497. TO     3194.
                THE ROUTED HYDROGRAPH SHOULD BE EXAMINED FOR OSCILLATIONS OR OUTFLOWS GREATER THAN PEAK INFLOWS.
                THIS CAN BE CORRECTED BY DECREASING THE TIME INTERVAL OR INCREASING STORAGE (USE A LONGER REACH.)
```

HYDROGRAPH AT STATION RFBAY

DA	MON	HRMN	ORD	OUTFLOW	STORAGE	STAGE	DA	MON	HRMN	ORD	OUTFLOW	STORAGE	STAGE	DA	MON	HRMN	ORD	OUTFLOW	STORAGE	STAGE
1		0000	1	0.	0.0	1141.0	2		0350	335	529.	39.3	1153.2	3		0740	669	52.	34.4	1151.1
1		0005	2	0.	0.0	1141.0	2		0355	336	507.	38.3	1153.1	3		0745	670	52.	34.4	1151.1
1		0010	3	0.	0.0	1141.0	2		0400	337	420.	37.2	1152.7	3		0750	671	52.	34.4	1151.1
1		0015	4	0.	0.0	1141.0	2		0405	338	339.	36.4	1152.3	3		0755	672	51.	34.4	1151.1
1		0020	5	0.	0.0	1141.0	2		0410	339	324.	36.2	1152.2	3		0800	673	49.	34.4	1151.1
1		0025	6	0.	0.0	1141.0	2		0415	340	367.	36.7	1152.5	3		0805	674	44.	34.3	1151.1
1		0030	7	0.	0.0	1141.0	2		0420	341	416.	37.2	1152.7	3		0810	675	36.	34.3	1151.1
1		0035	8	0.	0.0	1141.0	2		0425	342	444.	37.4	1152.8	3		0815	676	29.	34.2	1151.1
1		0040	9	0.	0.0	1141.0	2		0430	343	455.	37.6	1152.9	3		0820	677	25.	34.2	1151.1
1		0045	10	0.	0.0	1141.0	2		0435	344	458.	37.6	1152.9	3		0825	678	32.	34.2	1151.1
1		0050	11	0.	0.0	1141.0	2		0440	345	457.	37.6	1152.9	3		0830	679	43.	34.3	1151.1
1		0055	12	0.	0.0	1141.0	2		0445	346	454.	37.5	1152.9	3		0835	680	48.	34.3	1151.1
1		0100	13	0.	0.0	1141.0	2		0450	347	450.	37.5	1152.8	3		0840	681	50.	34.4	1151.1
1		0105	14	0.	0.0	1141.0	2		0455	348	445.	37.5	1152.8	3		0845	682	50.	34.4	1151.1
1		0110	15	0.	0.0	1141.0	2		0500	349	441.	37.4	1152.8	3		0850	683	50.	34.4	1151.1
1		0115	16	0.	0.0	1141.0	2		0505	350	437.	37.4	1152.8	3		0855	684	50.	34.4	1151.1
1		0120	17	0.	0.0	1141.0	2		0510	351	432.	37.3	1152.8	3		0900	685	50.	34.4	1151.1
1		0125	18	0.	0.0	1141.0	2		0515	352	428.	37.3	1152.7	3		0905	686	50.	34.4	1151.1
1		0130	19	0.	0.0	1141.0	2		0520	353	424.	37.2	1152.7	3		0910	687	50.	34.4	1151.1
1		0135	20	0.	0.0	1141.0	2		0525	354	419.	37.2	1152.7	3		0915	688	50.	34.4	1151.1
1		0140	21	0.	0.0	1141.0	2		0530	355	415.	37.2	1152.7	3		0920	689	50.	34.4	1151.1
1		0145	22	0.	0.0	1141.0	2		0535	356	411.	37.1	1152.7	3		0925	690	50.	34.4	1151.1

1	0150	23	0.	0.0	1141.0	*	2	0540	357	407.	37.1	1152.6	*	3	0930	691	50.	34.4	1151.1
1	0155	24	0.	0.0	1141.0	*	2	0545	358	399.	37.0	1152.6	*	3	0935	692	50.	34.4	1151.1
1	0200	25	0.	0.0	1141.0	*	2	0550	359	380.	36.8	1152.5	*	3	0940	693	50.	34.4	1151.1
1	0205	26	0.	0.0	1141.0	*	2	0555	360	341.	36.4	1152.3	*	3	0945	694	49.	34.4	1151.1
1	0210	27	0.	0.0	1141.0	*	2	0600	361	283.	35.9	1152.0	*	3	0950	695	49.	34.4	1151.1
1	0215	28	0.	0.0	1141.0	*	2	0605	362	220.	35.5	1151.7	*	3	0955	696	49.	34.4	1151.1
1	0220	29	0.	0.0	1141.0	*	2	0610	363	220.	35.5	1151.7	*	3	1000	697	47.	34.3	1151.1
1	0225	30	0.	0.0	1141.0	*	2	0615	364	278.	35.9	1152.0	*	3	1005	698	41.	34.3	1151.1
1	0230	31	0.	0.0	1141.0	*	2	0620	365	325.	36.3	1152.3	*	3	1010	699	34.	34.2	1151.1
1	0235	32	0.	0.0	1141.0	*	2	0625	366	347.	36.5	1152.4	*	3	1015	700	28.	34.2	1151.1
1	0240	33	0.	0.0	1141.0	*	2	0630	367	357.	36.6	1152.4	*	3	1020	701	24.	34.2	1151.1
1	0245	34	0.	0.0	1141.0	*	2	0635	368	359.	36.6	1152.4	*	3	1025	702	28.	34.2	1151.1
1	0250	35	0.	0.0	1141.0	*	2	0640	369	359.	36.6	1152.4	*	3	1030	703	37.	34.3	1151.1
1	0255	36	0.	0.0	1141.0	*	2	0645	370	357.	36.6	1152.4	*	3	1035	704	44.	34.3	1151.1
1	0300	37	0.	0.0	1141.0	*	2	0650	371	355.	36.5	1152.4	*	3	1040	705	47.	34.3	1151.1
1	0305	38	0.	0.0	1141.0	*	2	0655	372	352.	36.5	1152.4	*	3	1045	706	47.	34.3	1151.1
1	0310	39	0.	0.0	1141.0	*	2	0700	373	348.	36.5	1152.4	*	3	1050	707	48.	34.3	1151.1
1	0315	40	0.	0.0	1141.0	*	2	0705	374	345.	36.5	1152.3	*	3	1055	708	48.	34.3	1151.1
1	0320	41	0.	0.0	1141.0	*	2	0710	375	342.	36.4	1152.3	*	3	1100	709	48.	34.3	1151.1
1	0325	42	0.	0.0	1141.0	*	2	0715	376	339.	36.4	1152.3	*	3	1105	710	47.	34.3	1151.1
1	0330	43	0.	0.0	1141.0	*	2	0720	377	336.	36.4	1152.3	*	3	1110	711	47.	34.3	1151.1
1	0335	44	0.	0.0	1141.0	*	2	0725	378	333.	36.3	1152.3	*	3	1115	712	47.	34.3	1151.1
1	0340	45	0.	0.0	1141.0	*	2	0730	379	330.	36.3	1152.3	*	3	1120	713	47.	34.3	1151.1
1	0345	46	0.	0.0	1141.0	*	2	0735	380	327.	36.3	1152.3	*	3	1125	714	47.	34.3	1151.1
1	0350	47	0.	0.0	1141.0	*	2	0740	381	324.	36.2	1152.2	*	3	1130	715	47.	34.3	1151.1
1	0355	48	0.	0.0	1141.0	*	2	0745	382	320.	36.2	1152.2	*	3	1135	716	47.	34.3	1151.1
1	0400	49	0.	0.0	1141.0	*	2	0750	383	307.	36.1	1152.2	*	3	1140	717	47.	34.3	1151.1
1	0405	50	0.	0.0	1141.0	*	2	0755	384	269.	35.8	1152.0	*	3	1145	718	47.	34.3	1151.1
1	0410	51	0.	0.0	1141.0	*	2	0800	385	218.	35.5	1151.7	*	3	1150	719	46.	34.3	1151.1
1	0415	52	0.	0.0	1141.0	*	2	0805	386	174.	35.2	1151.5	*	3	1155	720	46.	34.3	1151.1
1	0420	53	0.	0.0	1141.0	*	2	0810	387	167.	35.2	1151.4	*	3	1200	721	46.	34.3	1151.1
1	0425	54	0.	0.0	1141.0	*	2	0815	388	211.	35.4	1151.7	*	3	1205	722	46.	34.3	1151.1
1	0430	55	0.	0.0	1141.0	*	2	0820	389	265.	35.8	1151.9	*	3	1210	723	46.	34.3	1151.1
1	0435	56	0.	0.0	1141.0	*	2	0825	390	291.	35.9	1152.1	*	3	1215	724	46.	34.3	1151.1
1	0440	57	0.	0.0	1141.0	*	2	0830	391	299.	36.0	1152.1	*	3	1220	725	46.	34.3	1151.1
1	0445	58	0.	0.0	1141.0	*	2	0835	392	300.	36.0	1152.1	*	3	1225	726	46.	34.3	1151.1
1	0450	59	0.	0.0	1141.0	*	2	0840	393	300.	36.0	1152.1	*	3	1230	727	46.	34.3	1151.1
1	0455	60	0.	0.0	1141.0	*	2	0845	394	299.	36.0	1152.1	*	3	1235	728	46.	34.3	1151.1
1	0500	61	0.	0.0	1141.0	*	2	0850	395	297.	36.0	1152.1	*	3	1240	729	46.	34.3	1151.1
1	0505	62	0.	0.0	1141.0	*	2	0855	396	296.	36.0	1152.1	*	3	1245	730	46.	34.3	1151.1
1	0510	63	0.	0.0	1141.0	*	2	0900	397	295.	36.0	1152.1	*	3	1250	731	46.	34.3	1151.1
1	0515	64	0.	0.0	1141.0	*	2	0905	398	294.	36.0	1152.1	*	3	1255	732	46.	34.3	1151.1
1	0520	65	0.	0.0	1141.0	*	2	0910	399	292.	36.0	1152.1	*	3	1300	733	46.	34.3	1151.1
1	0525	66	0.	0.0	1141.0	*	2	0915	400	291.	35.9	1152.1	*	3	1305	734	46.	34.3	1151.1
1	0530	67	0.	0.0	1141.0	*	2	0920	401	290.	35.9	1152.1	*	3	1310	735	46.	34.3	1151.1
1	0535	68	0.	0.0	1141.0	*	2	0925	402	289.	35.9	1152.1	*	3	1315	736	46.	34.3	1151.1
1	0540	69	0.	0.0	1141.0	*	2	0930	403	288.	35.9	1152.1	*	3	1320	737	46.	34.3	1151.1
1	0545	70	0.	0.0	1141.0	*	2	0935	404	286.	35.9	1152.1	*	3	1325	738	46.	34.3	1151.1
1	0550	71	0.	0.0	1141.0	*	2	0940	405	285.	35.9	1152.1	*	3	1330	739	46.	34.3	1151.1
1	0555	72	0.	0.0	1141.0	*	2	0945	406	281.	35.9	1152.0	*	3	1335	740	46.	34.3	1151.1
1	0600	73	0.	0.0	1141.0	*	2	0950	407	268.	35.8	1152.0	*	3	1340	741	46.	34.3	1151.1
1	0605	74	0.	0.0	1141.0	*	2	0955	408	238.	35.6	1151.8	*	3	1345	742	46.	34.3	1151.1
1	0610	75	0.	0.0	1141.0	*	2	1000	409	195.	35.3	1151.6	*	3	1350	743	46.	34.3	1151.1
1	0615	76	0.	0.0	1141.0	*	2	1005	410	154.	35.1	1151.4	*	3	1355	744	46.	34.3	1151.1
1	0620	77	0.	0.0	1141.0	*	2	1010	411	143.	35.0	1151.3	*	3	1400	745	46.	34.3	1151.1
1	0625	78	0.	0.0	1141.0	*	2	1015	412	181.	35.3	1151.5	*	3	1405	746	46.	34.3	1151.1
1	0630	79	0.	0.0	1141.0	*	2	1020	413	233.	35.6	1151.8	*	3	1410	747	46.	34.3	1151.1
1	0635	80	0.	0.0	1141.0	*	2	1025	414	261.	35.8	1151.9	*	3	1415	748	46.	34.3	1151.1
1	0640	81	0.	0.0	1141.0	*	2	1030	415	269.	35.8	1152.0	*	3	1420	749	46.	34.3	1151.1
1	0645	82	0.	0.0	1141.0	*	2	1035	416	271.	35.8	1152.0	*	3	1425	750	46.	34.3	1151.1
1	0650	83	0.	0.0	1141.0	*	2	1040	417	271.	35.8	1152.0	*	3	1430	751	46.	34.3	1151.1
1	0655	84	0.	0.0	1141.0	*	2	1045	418	270.	35.8	1152.0	*	3	1435	752	46.	34.3	1151.1
1	0700	85	0.	0.0	1141.0	*	2	1050	419	269.	35.8	1152.0	*	3	1440	753	46.	34.3	1151.1
1	0705	86	0.	0.0	1141.0	*	2	1055	420	268.	35.8	1152.0	*	3	1445	754	46.	34.3	1151.1
1	0710	87	0.	0.0	1141.0	*	2	1100	421	267.	35.8	1152.0	*	3	1450	755	46.	34.3	1151.1
1	0715	88	0.	0.0	1141.0	*	2	1105	422	266.	35.8	1152.0	*	3	1455	756	46.	34.3	1151.1
1	0720	89	0.	0.0	1141.0	*	2	1110	423	265.	35.8	1151.9	*	3	1500	757	46.	34.3	1151.1

1	0725	90	0.	0.0	1141.0	*	2	1115	424	263.	35.8	1151.9	*	3	1505	758	46.	34.3	1151.1
1	0730	91	0.	0.0	1141.0	*	2	1120	425	262.	35.8	1151.9	*	3	1510	759	46.	34.3	1151.1
1	0735	92	0.	0.0	1141.0	*	2	1125	426	261.	35.8	1151.9	*	3	1515	760	46.	34.3	1151.1
1	0740	93	0.	0.0	1141.0	*	2	1130	427	260.	35.8	1151.9	*	3	1520	761	46.	34.3	1151.1
1	0745	94	0.	0.0	1141.0	*	2	1135	428	259.	35.7	1151.9	*	3	1525	762	46.	34.3	1151.1
1	0750	95	0.	0.0	1141.0	*	2	1140	429	258.	35.7	1151.9	*	3	1530	763	46.	34.3	1151.1
1	0755	96	0.	0.0	1141.0	*	2	1145	430	256.	35.7	1151.9	*	3	1535	764	46.	34.3	1151.1
1	0800	97	0.	0.0	1141.0	*	2	1150	431	245.	35.7	1151.8	*	3	1540	765	46.	34.3	1151.1
1	0805	98	0.	0.0	1141.0	*	2	1155	432	218.	35.5	1151.7	*	3	1545	766	46.	34.3	1151.1
1	0810	99	0.	0.0	1141.0	*	2	1200	433	179.	35.3	1151.5	*	3	1550	767	46.	34.3	1151.1
1	0815	100	0.	0.0	1141.0	*	2	1205	434	140.	35.0	1151.3	*	3	1555	768	46.	34.3	1151.1
1	0820	101	0.	0.0	1141.0	*	2	1210	435	126.	34.9	1151.3	*	3	1600	769	46.	34.3	1151.1
1	0825	102	0.	0.0	1141.0	*	2	1215	436	157.	35.1	1151.4	*	3	1605	770	46.	34.3	1151.1
1	0830	103	0.	0.0	1141.0	*	2	1220	437	208.	35.4	1151.7	*	3	1610	771	46.	34.3	1151.1
1	0835	104	0.	0.0	1141.0	*	2	1225	438	235.	35.6	1151.8	*	3	1615	772	46.	34.3	1151.1
1	0840	105	0.	0.0	1141.0	*	2	1230	439	244.	35.7	1151.8	*	3	1620	773	46.	34.3	1151.1
1	0845	106	0.	0.0	1141.0	*	2	1235	440	246.	35.7	1151.9	*	3	1625	774	46.	34.3	1151.1
1	0850	107	0.	0.0	1141.0	*	2	1240	441	246.	35.7	1151.9	*	3	1630	775	46.	34.3	1151.1
1	0855	108	0.	0.0	1141.0	*	2	1245	442	246.	35.7	1151.8	*	3	1635	776	46.	34.3	1151.1
1	0900	109	0.	0.0	1141.0	*	2	1250	443	245.	35.7	1151.8	*	3	1640	777	46.	34.3	1151.1
1	0905	110	0.	0.0	1141.0	*	2	1255	444	244.	35.7	1151.8	*	3	1645	778	46.	34.3	1151.1
1	0910	111	0.	0.0	1141.0	*	2	1300	445	243.	35.6	1151.8	*	3	1650	779	46.	34.3	1151.1
1	0915	112	0.	0.0	1141.0	*	2	1305	446	242.	35.6	1151.8	*	3	1655	780	46.	34.3	1151.1
1	0920	113	0.	0.0	1141.0	*	2	1310	447	241.	35.6	1151.8	*	3	1700	781	46.	34.3	1151.1
1	0925	114	0.	0.0	1141.0	*	2	1315	448	241.	35.6	1151.8	*	3	1705	782	46.	34.3	1151.1
1	0930	115	0.	0.0	1141.0	*	2	1320	449	240.	35.6	1151.8	*	3	1710	783	46.	34.3	1151.1
1	0935	116	0.	0.0	1141.0	*	2	1325	450	239.	35.6	1151.8	*	3	1715	784	46.	34.3	1151.1
1	0940	117	0.	0.0	1141.0	*	2	1330	451	238.	35.6	1151.8	*	3	1720	785	46.	34.3	1151.1
1	0945	118	0.	0.0	1141.0	*	2	1335	452	237.	35.6	1151.8	*	3	1725	786	46.	34.3	1151.1
1	0950	119	0.	0.0	1141.0	*	2	1340	453	237.	35.6	1151.8	*	3	1730	787	46.	34.3	1151.1
1	0955	120	0.	0.0	1141.0	*	2	1345	454	235.	35.6	1151.8	*	3	1735	788	46.	34.3	1151.1
1	1000	121	0.	0.0	1141.0	*	2	1350	455	226.	35.5	1151.7	*	3	1740	789	46.	34.3	1151.1
1	1005	122	0.	0.0	1141.0	*	2	1355	456	202.	35.4	1151.6	*	3	1745	790	46.	34.3	1151.1
1	1010	123	0.	0.0	1141.0	*	2	1400	457	167.	35.2	1151.4	*	3	1750	791	46.	34.3	1151.1
1	1015	124	0.	0.0	1141.0	*	2	1405	458	131.	34.9	1151.3	*	3	1755	792	46.	34.3	1151.1
1	1020	125	0.	0.0	1141.0	*	2	1410	459	115.	34.8	1151.2	*	3	1800	793	46.	34.3	1151.1
1	1025	126	0.	0.0	1141.0	*	2	1415	460	138.	35.0	1151.3	*	3	1805	794	46.	34.3	1151.1
1	1030	127	0.	0.0	1141.0	*	2	1420	461	188.	35.3	1151.6	*	3	1810	795	46.	34.3	1151.1
1	1035	128	0.	0.0	1141.0	*	2	1425	462	218.	35.5	1151.7	*	3	1815	796	46.	34.3	1151.1
1	1040	129	0.	0.0	1141.0	*	2	1430	463	228.	35.6	1151.8	*	3	1820	797	46.	34.3	1151.1
1	1045	130	0.	0.0	1141.0	*	2	1435	464	231.	35.6	1151.8	*	3	1825	798	46.	34.3	1151.1
1	1050	131	0.	0.0	1141.0	*	2	1440	465	232.	35.6	1151.8	*	3	1830	799	46.	34.3	1151.1
1	1055	132	0.	0.0	1141.1	*	2	1445	466	232.	35.6	1151.8	*	3	1835	800	46.	34.3	1151.1
1	1100	133	0.	0.1	1141.3	*	2	1450	467	232.	35.6	1151.8	*	3	1840	801	46.	34.3	1151.1
1	1105	134	0.	0.2	1141.6	*	2	1455	468	232.	35.6	1151.8	*	3	1845	802	46.	34.3	1151.1
1	1110	135	0.	0.3	1141.8	*	2	1500	469	231.	35.6	1151.8	*	3	1850	803	46.	34.3	1151.1
1	1115	136	0.	0.3	1141.9	*	2	1505	470	231.	35.6	1151.8	*	3	1855	804	46.	34.3	1151.1
1	1120	137	0.	0.3	1142.0	*	2	1510	471	231.	35.6	1151.8	*	3	1900	805	46.	34.3	1151.1
1	1125	138	0.	0.4	1142.1	*	2	1515	472	231.	35.6	1151.8	*	3	1905	806	46.	34.3	1151.1
1	1130	139	0.	0.4	1142.2	*	2	1520	473	230.	35.6	1151.8	*	3	1910	807	46.	34.3	1151.1
1	1135	140	0.	0.4	1142.3	*	2	1525	474	230.	35.6	1151.8	*	3	1915	808	46.	34.3	1151.1
1	1140	141	0.	0.5	1142.6	*	2	1530	475	230.	35.6	1151.8	*	3	1920	809	46.	34.3	1151.1
1	1145	142	0.	0.7	1143.0	*	2	1535	476	230.	35.6	1151.8	*	3	1925	810	46.	34.3	1151.1
1	1150	143	0.	0.9	1143.8	*	2	1540	477	229.	35.6	1151.8	*	3	1930	811	46.	34.3	1151.1
1	1155	144	0.	1.2	1144.7	*	2	1545	478	228.	35.6	1151.8	*	3	1935	812	46.	34.3	1151.1
1	1200	145	0.	1.6	1145.7	*	2	1550	479	220.	35.5	1151.7	*	3	1940	813	46.	34.3	1151.1
1	1205	146	0.	1.9	1146.8	*	2	1555	480	197.	35.4	1151.6	*	3	1945	814	46.	34.3	1151.1
1	1210	147	0.	2.5	1148.6	*	2	1600	481	162.	35.1	1151.4	*	3	1950	815	46.	34.3	1151.1
1	1215	148	0.	4.1	1150.1	*	2	1605	482	127.	34.9	1151.3	*	3	1955	816	46.	34.3	1151.1
1	1220	149	0.	7.5	1150.2	*	2	1610	483	110.	34.8	1151.2	*	3	2000	817	46.	34.3	1151.1
1	1225	150	0.	12.6	1150.4	*	2	1615	484	129.	34.9	1151.3	*	3	2005	818	46.	34.3	1151.1
1	1230	151	0.	18.8	1150.6	*	2	1620	485	178.	35.2	1151.5	*	3	2010	819	46.	34.3	1151.1
1	1235	152	0.	25.8	1150.8	*	2	1625	486	211.	35.5	1151.7	*	3	2015	820	46.	34.3	1151.1
1	1240	153	0.	33.3	1151.0	*	2	1630	487	223.	35.5	1151.7	*	3	2020	821	46.	34.3	1151.1
1	1245	154	530.	39.3	1153.2	*	2	1635	488	226.	35.5	1151.7	*	3	2025	822	46.	34.3	1151.1
1	1250	155	634.	43.9	1153.7	*	2	1640	489	227.	35.5	1151.8	*	3	2030	823	46.	34.3	1151.1
1	1255	156	1514.	47.0	1154.0	*	2	1645	490	227.	35.5	1151.8	*	3	2035	824	46.	34.3	1151.1

1	1300	157	1903.	48.0	1154.1	*	2	1650	491	227.	35.5	1151.8	*	3	2040	825	46.	34.3	1151.1
1	1305	158	2115.	48.5	1154.2	*	2	1655	492	227.	35.5	1151.8	*	3	2045	826	46.	34.3	1151.1
1	1310	159	2294.	48.9	1154.2	*	2	1700	493	226.	35.5	1151.8	*	3	2050	827	46.	34.3	1151.1
1	1315	160	2456.	49.3	1154.3	*	2	1705	494	226.	35.5	1151.7	*	3	2055	828	46.	34.3	1151.1
1	1320	161	2619.	49.6	1154.3	*	2	1710	495	226.	35.5	1151.7	*	3	2100	829	46.	34.3	1151.1
1	1325	162	2755.	50.0	1154.4	*	2	1715	496	226.	35.5	1151.7	*	3	2105	830	46.	34.3	1151.1
1	1330	163	2842.	50.2	1154.4	*	2	1720	497	226.	35.5	1151.7	*	3	2110	831	46.	34.3	1151.1
1	1335	164	2881.	50.3	1154.4	*	2	1725	498	226.	35.5	1151.7	*	3	2115	832	46.	34.3	1151.1
1	1340	165	2849.	50.2	1154.4	*	2	1730	499	225.	35.5	1151.7	*	3	2120	833	46.	34.3	1151.1
1	1345	166	2716.	49.9	1154.4	*	2	1735	500	225.	35.5	1151.7	*	3	2125	834	46.	34.3	1151.1
1	1350	167	2477.	49.3	1154.3	*	2	1740	501	225.	35.5	1151.7	*	3	2130	835	46.	34.3	1151.1
1	1355	168	2197.	48.7	1154.2	*	2	1745	502	224.	35.5	1151.7	*	3	2135	836	46.	34.3	1151.1
1	1400	169	1999.	48.2	1154.1	*	2	1750	503	216.	35.5	1151.7	*	3	2140	837	46.	34.3	1151.1
1	1405	170	1981.	48.1	1154.1	*	2	1755	504	194.	35.3	1151.6	*	3	2145	838	46.	34.3	1151.1
1	1410	171	2093.	48.4	1154.2	*	2	1800	505	159.	35.1	1151.4	*	3	2150	839	46.	34.3	1151.1
1	1415	172	2146.	48.5	1154.2	*	2	1805	506	125.	34.9	1151.3	*	3	2155	840	46.	34.3	1151.1
1	1420	173	2095.	48.4	1154.2	*	2	1810	507	107.	34.8	1151.2	*	3	2200	841	46.	34.3	1151.1
1	1425	174	2035.	48.3	1154.2	*	2	1815	508	126.	34.9	1151.3	*	3	2205	842	46.	34.3	1151.1
1	1430	175	1993.	48.2	1154.1	*	2	1820	509	174.	35.2	1151.5	*	3	2210	843	46.	34.3	1151.1
1	1435	176	1970.	48.1	1154.1	*	2	1825	510	207.	35.4	1151.7	*	3	2215	844	46.	34.3	1151.1
1	1440	177	1958.	48.1	1154.1	*	2	1830	511	219.	35.5	1151.7	*	3	2220	845	46.	34.3	1151.1
1	1445	178	1927.	48.0	1154.1	*	2	1835	512	222.	35.5	1151.7	*	3	2225	846	46.	34.3	1151.1
1	1450	179	1871.	47.9	1154.1	*	2	1840	513	223.	35.5	1151.7	*	3	2230	847	46.	34.3	1151.1
1	1455	180	1805.	47.7	1154.1	*	2	1845	514	223.	35.5	1151.7	*	3	2235	848	46.	34.3	1151.1
1	1500	181	1751.	47.6	1154.1	*	2	1850	515	223.	35.5	1151.7	*	3	2240	849	46.	34.3	1151.1
1	1505	182	1703.	47.5	1154.1	*	2	1855	516	223.	35.5	1151.7	*	3	2245	850	46.	34.3	1151.1
1	1510	183	1646.	47.4	1154.0	*	2	1900	517	223.	35.5	1151.7	*	3	2250	851	46.	34.3	1151.1
1	1515	184	1592.	47.2	1154.0	*	2	1905	518	223.	35.5	1151.7	*	3	2255	852	46.	34.3	1151.1
1	1520	185	1546.	47.1	1154.0	*	2	1910	519	223.	35.5	1151.7	*	3	2300	853	46.	34.3	1151.1
1	1525	186	1504.	47.0	1154.0	*	2	1915	520	222.	35.5	1151.7	*	3	2305	854	46.	34.3	1151.1
1	1530	187	1477.	46.9	1154.0	*	2	1920	521	222.	35.5	1151.7	*	3	2310	855	46.	34.3	1151.1
1	1535	188	1444.	46.8	1154.0	*	2	1925	522	222.	35.5	1151.7	*	3	2315	856	46.	34.3	1151.1
1	1540	189	1398.	46.7	1154.0	*	2	1930	523	222.	35.5	1151.7	*	3	2320	857	46.	34.3	1151.1
1	1545	190	1338.	46.4	1153.9	*	2	1935	524	222.	35.5	1151.7	*	3	2325	858	46.	34.3	1151.1
1	1550	191	1250.	46.1	1153.9	*	2	1940	525	222.	35.5	1151.7	*	3	2330	859	46.	34.3	1151.1
1	1555	192	1136.	45.7	1153.9	*	2	1945	526	220.	35.5	1151.7	*	3	2335	860	46.	34.3	1151.1
1	1600	193	1038.	45.4	1153.8	*	2	1950	527	213.	35.5	1151.7	*	3	2340	861	46.	34.3	1151.1
1	1605	194	1016.	45.3	1153.8	*	2	1955	528	191.	35.3	1151.6	*	3	2345	862	46.	34.3	1151.1
1	1610	195	1081.	45.5	1153.9	*	2	2000	529	157.	35.1	1151.4	*	3	2350	863	46.	34.3	1151.1
1	1615	196	1142.	45.8	1153.9	*	2	2005	530	123.	34.9	1151.3	*	3	2355	864	46.	34.3	1151.1
1	1620	197	1141.	45.8	1153.9	*	2	2010	531	104.	34.7	1151.2	*	4	0000	865	46.	34.3	1151.1
1	1625	198	1112.	45.7	1153.9	*	2	2015	532	121.	34.9	1151.3	*	4	0005	866	46.	34.3	1151.1
1	1630	199	1086.	45.6	1153.9	*	2	2020	533	168.	35.2	1151.5	*	4	0010	867	46.	34.3	1151.1
1	1635	200	1063.	45.5	1153.8	*	2	2025	534	204.	35.4	1151.6	*	4	0015	868	46.	34.3	1151.1
1	1640	201	1041.	45.4	1153.8	*	2	2030	535	216.	35.5	1151.7	*	4	0020	869	46.	34.3	1151.1
1	1645	202	1020.	45.3	1153.8	*	2	2035	536	219.	35.5	1151.7	*	4	0025	870	46.	34.3	1151.1
1	1650	203	1002.	45.3	1153.8	*	2	2040	537	220.	35.5	1151.7	*	4	0030	871	46.	34.3	1151.1
1	1655	204	990.	45.2	1153.8	*	2	2045	538	220.	35.5	1151.7	*	4	0035	872	46.	34.3	1151.1
1	1700	205	980.	45.2	1153.8	*	2	2050	539	220.	35.5	1151.7	*	4	0040	873	46.	34.3	1151.1
1	1705	206	957.	45.1	1153.8	*	2	2055	540	220.	35.5	1151.7	*	4	0045	874	46.	34.3	1151.1
1	1710	207	931.	45.0	1153.8	*	2	2100	541	220.	35.5	1151.7	*	4	0050	875	46.	34.3	1151.1
1	1715	208	911.	45.0	1153.8	*	2	2105	542	220.	35.5	1151.7	*	4	0055	876	46.	34.3	1151.1
1	1720	209	895.	44.9	1153.8	*	2	2110	543	220.	35.5	1151.7	*	4	0100	877	46.	34.3	1151.1
1	1725	210	879.	44.8	1153.8	*	2	2115	544	220.	35.5	1151.7	*	4	0105	878	46.	34.3	1151.1
1	1730	211	863.	44.8	1153.8	*	2	2120	545	220.	35.5	1151.7	*	4	0110	879	46.	34.3	1151.1
1	1735	212	849.	44.7	1153.8	*	2	2125	546	220.	35.5	1151.7	*	4	0115	880	46.	34.3	1151.1
1	1740	213	838.	44.7	1153.8	*	2	2130	547	220.	35.5	1151.7	*	4	0120	881	46.	34.3	1151.1
1	1745	214	834.	44.7	1153.8	*	2	2135	548	220.	35.5	1151.7	*	4	0125	882	46.	34.3	1151.1
1	1750	215	808.	44.6	1153.8	*	2	2140	549	219.	35.5	1151.7	*	4	0130	883	46.	34.3	1151.1
1	1755	216	737.	44.4	1153.7	*	2	2145	550	218.	35.5	1151.7	*	4	0135	884	46.	34.3	1151.1
1	1800	217	660.	44.1	1153.7	*	2	2150	551	210.	35.4	1151.7	*	4	0140	885	46.	34.3	1151.1
1	1805	218	645.	44.0	1153.7	*	2	2155	552	189.	35.3	1151.6	*	4	0145	886	46.	34.3	1151.1
1	1810	219	718.	44.3	1153.7	*	2	2200	553	155.	35.1	1151.4	*	4	0150	887	46.	34.3	1151.1
1	1815	220	806.	44.6	1153.8	*	2	2205	554	121.	34.9	1151.3	*	4	0155	888	46.	34.3	1151.1
1	1820	221	844.	44.7	1153.8	*	2	2210	555	101.	34.7	1151.2	*	4	0200	889	46.	34.3	1151.1
1	1825	222	849.	44.7	1153.8	*	2	2215	556	120.	34.9	1151.3	*	4	0205	890	46.	34.3	1151.1
1	1830	223	846.	44.7	1153.8	*	2	2220	557	168.	35.2	1151.4	*	4	0210	891	46.	34.3	1151.1

1	1835	224	843.	44.7	1153.8	*	2	2225	558	202.	35.4	1151.6	*	4	0215	892	46.	34.3	1151.1
1	1840	225	841.	44.7	1153.8	*	2	2230	559	214.	35.5	1151.7	*	4	0220	893	46.	34.3	1151.1
1	1845	226	840.	44.7	1153.8	*	2	2235	560	217.	35.5	1151.7	*	4	0225	894	46.	34.3	1151.1
1	1850	227	840.	44.7	1153.8	*	2	2240	561	218.	35.5	1151.7	*	4	0230	895	46.	34.3	1151.1
1	1855	228	841.	44.7	1153.8	*	2	2245	562	218.	35.5	1151.7	*	4	0235	896	46.	34.3	1151.1
1	1900	229	843.	44.7	1153.8	*	2	2250	563	218.	35.5	1151.7	*	4	0240	897	46.	34.3	1151.1
1	1905	230	845.	44.7	1153.8	*	2	2255	564	218.	35.5	1151.7	*	4	0245	898	46.	34.3	1151.1
1	1910	231	848.	44.7	1153.8	*	2	2300	565	218.	35.5	1151.7	*	4	0250	899	46.	34.3	1151.1
1	1915	232	856.	44.8	1153.8	*	2	2305	566	218.	35.5	1151.7	*	4	0255	900	46.	34.3	1151.1
1	1920	233	864.	44.8	1153.8	*	2	2310	567	218.	35.5	1151.7	*	4	0300	901	46.	34.3	1151.1
1	1925	234	859.	44.8	1153.8	*	2	2315	568	218.	35.5	1151.7	*	4	0305	902	46.	34.3	1151.1
1	1930	235	851.	44.7	1153.8	*	2	2320	569	218.	35.5	1151.7	*	4	0310	903	46.	34.3	1151.1
1	1935	236	849.	44.7	1153.8	*	2	2325	570	218.	35.5	1151.7	*	4	0315	904	46.	34.3	1151.1
1	1940	237	847.	44.7	1153.8	*	2	2330	571	218.	35.5	1151.7	*	4	0320	905	46.	34.3	1151.1
1	1945	238	832.	44.7	1153.8	*	2	2335	572	217.	35.5	1151.7	*	4	0325	906	46.	34.3	1151.1
1	1950	239	783.	44.5	1153.8	*	2	2340	573	217.	35.5	1151.7	*	4	0330	907	46.	34.3	1151.1
1	1955	240	697.	44.2	1153.7	*	2	2345	574	216.	35.5	1151.7	*	4	0335	908	46.	34.3	1151.1
1	2000	241	633.	43.9	1153.7	*	2	2350	575	209.	35.4	1151.7	*	4	0340	909	46.	34.3	1151.1
1	2005	242	628.	43.6	1153.7	*	2	2355	576	188.	35.3	1151.6	*	4	0345	910	46.	34.3	1151.1
1	2010	243	641.	44.0	1153.7	*	3	0000	577	154.	35.1	1151.4	*	4	0350	911	46.	34.3	1151.1
1	2015	244	791.	44.5	1153.8	*	3	0005	578	120.	34.9	1151.3	*	4	0355	912	46.	34.3	1151.1
1	2020	245	836.	44.7	1153.8	*	3	0010	579	99.	34.7	1151.2	*	4	0400	913	46.	34.3	1151.1
1	2025	246	845.	44.7	1153.8	*	3	0015	580	115.	34.8	1151.2	*	4	0405	914	46.	34.3	1151.1
1	2030	247	846.	44.7	1153.8	*	3	0020	581	162.	35.1	1151.4	*	4	0410	915	46.	34.3	1151.1
1	2035	248	847.	44.7	1153.8	*	3	0025	582	198.	35.4	1151.6	*	4	0415	916	46.	34.3	1151.1
1	2040	249	848.	44.7	1153.8	*	3	0030	583	211.	35.4	1151.7	*	4	0420	917	46.	34.3	1151.1
1	2045	250	849.	44.7	1153.8	*	3	0035	584	214.	35.5	1151.7	*	4	0425	918	46.	34.3	1151.1
1	2050	251	851.	44.7	1153.8	*	3	0040	585	215.	35.5	1151.7	*	4	0430	919	46.	34.3	1151.1
1	2055	252	852.	44.8	1153.8	*	3	0045	586	215.	35.5	1151.7	*	4	0435	920	46.	34.3	1151.1
1	2100	253	853.	44.8	1153.8	*	3	0050	587	215.	35.5	1151.7	*	4	0440	921	46.	34.3	1151.1
1	2105	254	854.	44.8	1153.8	*	3	0055	588	215.	35.5	1151.7	*	4	0445	922	46.	34.3	1151.1
1	2110	255	855.	44.8	1153.8	*	3	0100	589	211.	35.4	1151.7	*	4	0450	923	46.	34.3	1151.1
1	2115	256	855.	44.8	1153.8	*	3	0105	590	199.	35.4	1151.6	*	4	0455	924	46.	34.3	1151.1
1	2120	257	856.	44.8	1153.8	*	3	0110	591	175.	35.2	1151.5	*	4	0500	925	46.	34.3	1151.1
1	2125	258	856.	44.8	1153.8	*	3	0115	592	144.	35.0	1151.3	*	4	0505	926	46.	34.3	1151.1
1	2130	259	856.	44.8	1153.8	*	3	0120	593	114.	34.8	1151.2	*	4	0510	927	46.	34.3	1151.1
1	2135	260	856.	44.8	1153.8	*	3	0125	594	90.	34.6	1151.2	*	4	0515	928	46.	34.3	1151.1
1	2140	261	855.	44.8	1153.8	*	3	0130	595	73.	34.5	1151.2	*	4	0520	929	46.	34.3	1151.1
1	2145	262	839.	44.7	1153.8	*	3	0135	596	65.	34.5	1151.1	*	4	0525	930	46.	34.3	1151.1
1	2150	263	783.	44.5	1153.8	*	3	0140	597	61.	34.4	1151.1	*	4	0530	931	46.	34.3	1151.1
1	2155	264	688.	44.2	1153.7	*	3	0145	598	60.	34.4	1151.1	*	4	0535	932	46.	34.3	1151.1
1	2200	265	631.	43.8	1153.7	*	3	0150	599	59.	34.4	1151.1	*	4	0540	933	46.	34.3	1151.1
1	2205	266	624.	43.5	1153.6	*	3	0155	600	58.	34.4	1151.1	*	4	0545	934	46.	34.3	1151.1
1	2210	267	633.	43.8	1153.7	*	3	0200	601	55.	34.4	1151.1	*	4	0550	935	46.	34.3	1151.1
1	2215	268	773.	44.5	1153.7	*	3	0205	602	48.	34.3	1151.1	*	4	0555	936	46.	34.3	1151.1
1	2220	269	846.	44.7	1153.8	*	3	0210	603	40.	34.3	1151.1	*	4	0600	937	46.	34.3	1151.1
1	2225	270	863.	44.8	1153.8	*	3	0215	604	32.	34.2	1151.1	*	4	0605	938	46.	34.3	1151.1
1	2230	271	870.	44.8	1153.8	*	3	0220	605	31.	34.2	1151.1	*	4	0610	939	46.	34.3	1151.1
1	2235	272	863.	44.8	1153.8	*	3	0225	606	38.	34.3	1151.1	*	4	0615	940	46.	34.3	1151.1
1	2240	273	854.	44.8	1153.8	*	3	0230	607	48.	34.3	1151.1	*	4	0620	941	46.	34.3	1151.1
1	2245	274	850.	44.7	1153.8	*	3	0235	608	54.	34.4	1151.1	*	4	0625	942	46.	34.3	1151.1
1	2250	275	848.	44.7	1153.8	*	3	0240	609	57.	34.4	1151.1	*	4	0630	943	46.	34.3	1151.1
1	2255	276	847.	44.7	1153.8	*	3	0245	610	57.	34.4	1151.1	*	4	0635	944	46.	34.3	1151.1
1	2300	277	846.	44.7	1153.8	*	3	0250	611	58.	34.4	1151.1	*	4	0640	945	46.	34.3	1151.1
1	2305	278	844.	44.7	1153.8	*	3	0255	612	58.	34.4	1151.1	*	4	0645	946	46.	34.3	1151.1
1	2310	279	843.	44.7	1153.8	*	3	0300	613	57.	34.4	1151.1	*	4	0650	947	46.	34.3	1151.1
1	2315	280	841.	44.7	1153.8	*	3	0305	614	57.	34.4	1151.1	*	4	0655	948	46.	34.3	1151.1
1	2320	281	840.	44.7	1153.8	*	3	0310	615	57.	34.4	1151.1	*	4	0700	949	46.	34.3	1151.1
1	2325	282	838.	44.7	1153.8	*	3	0315	616	57.	34.4	1151.1	*	4	0705	950	46.	34.3	1151.1
1	2330	283	837.	44.7	1153.8	*	3	0320	617	57.	34.4	1151.1	*	4	0710	951	46.	34.3	1151.1
1	2335	284	835.	44.7	1153.8	*	3	0325	618	57.	34.4	1151.1	*	4	0715	952	46.	34.3	1151.1
1	2340	285	836.	44.7	1153.8	*	3	0330	619	57.	34.4	1151.1	*	4	0720	953	46.	34.3	1151.1
1	2345	286	827.	44.7	1153.8	*	3	0335	620	57.	34.4	1151.1	*	4	0725	954	46.	34.3	1151.1
1	2350	287	774.	44.5	1153.7	*	3	0340	621	57.	34.4	1151.1	*	4	0730	955	46.	34.3	1151.1
1	2355	288	671.	44.1	1153.7	*	3	0345	622	56.	34.4	1151.1	*	4	0735	956	46.	34.3	1151.1
2	0000	289	626.	43.6	1153.7	*	3	0350	623	56.	34.4	1151.1	*	4	0740	957	46.	34.3	1151.1
2	0005	290	614.	43.0	1153.6	*	3	0355	624	55.	34.4	1151.1	*	4	0745	958	46.	34.3	1151.1

2	0010	291	617.	43.2	1153.6	*	3	0400	625	52.	34.4	1151.1	*	4	0750	959	46.	34.3	1151.1
2	0015	292	642.	44.0	1153.7	*	3	0405	626	46.	34.3	1151.1	*	4	0755	960	46.	34.3	1151.1
2	0020	293	804.	44.6	1153.8	*	3	0410	627	38.	34.3	1151.1	*	4	0800	961	46.	34.3	1151.1
2	0025	294	807.	44.6	1153.8	*	3	0415	628	31.	34.2	1151.1	*	4	0805	962	46.	34.3	1151.1
2	0030	295	802.	44.6	1153.8	*	3	0420	629	29.	34.2	1151.1	*	4	0810	963	46.	34.3	1151.1
2	0035	296	797.	44.6	1153.8	*	3	0425	630	36.	34.3	1151.1	*	4	0815	964	46.	34.3	1151.1
2	0040	297	790.	44.5	1153.8	*	3	0430	631	47.	34.3	1151.1	*	4	0820	965	46.	34.3	1151.1
2	0045	298	783.	44.5	1153.8	*	3	0435	632	52.	34.4	1151.1	*	4	0825	966	46.	34.3	1151.1
2	0050	299	775.	44.5	1153.7	*	3	0440	633	54.	34.4	1151.1	*	4	0830	967	46.	34.3	1151.1
2	0055	300	767.	44.5	1153.7	*	3	0445	634	55.	34.4	1151.1	*	4	0835	968	46.	34.3	1151.1
2	0100	301	759.	44.4	1153.7	*	3	0450	635	55.	34.4	1151.1	*	4	0840	969	46.	34.3	1151.1
2	0105	302	750.	44.4	1153.7	*	3	0455	636	55.	34.4	1151.1	*	4	0845	970	46.	34.3	1151.1
2	0110	303	741.	44.4	1153.7	*	3	0500	637	55.	34.4	1151.1	*	4	0850	971	46.	34.3	1151.1
2	0115	304	732.	44.3	1153.7	*	3	0505	638	55.	34.4	1151.1	*	4	0855	972	46.	34.3	1151.1
2	0120	305	722.	44.3	1153.7	*	3	0510	639	55.	34.4	1151.1	*	4	0900	973	46.	34.3	1151.1
2	0125	306	713.	44.3	1153.7	*	3	0515	640	55.	34.4	1151.1	*	4	0905	974	46.	34.3	1151.1
2	0130	307	704.	44.2	1153.7	*	3	0520	641	55.	34.4	1151.1	*	4	0910	975	46.	34.3	1151.1
2	0135	308	694.	44.2	1153.7	*	3	0525	642	54.	34.4	1151.1	*	4	0915	976	46.	34.3	1151.1
2	0140	309	684.	44.2	1153.7	*	3	0530	643	54.	34.4	1151.1	*	4	0920	977	46.	34.3	1151.1
2	0145	310	661.	44.1	1153.7	*	3	0535	644	54.	34.4	1151.1	*	4	0925	978	46.	34.3	1151.1
2	0150	311	631.	43.8	1153.7	*	3	0540	645	54.	34.4	1151.1	*	4	0930	979	46.	34.3	1151.1
2	0155	312	613.	43.0	1153.6	*	3	0545	646	54.	34.4	1151.1	*	4	0935	980	46.	34.3	1151.1
2	0200	313	584.	41.7	1153.5	*	3	0550	647	54.	34.4	1151.1	*	4	0940	981	46.	34.3	1151.1
2	0205	314	554.	40.4	1153.3	*	3	0555	648	53.	34.4	1151.1	*	4	0945	982	46.	34.3	1151.1
2	0210	315	539.	39.7	1153.3	*	3	0600	649	50.	34.4	1151.1	*	4	0950	983	46.	34.3	1151.1
2	0215	316	542.	39.9	1153.3	*	3	0605	650	44.	34.3	1151.1	*	4	0955	984	46.	34.3	1151.1
2	0220	317	552.	40.3	1153.3	*	3	0610	651	37.	34.3	1151.1	*	4	1000	985	46.	34.3	1151.1
2	0225	318	561.	40.7	1153.4	*	3	0615	652	30.	34.2	1151.1	*	4	1005	986	46.	34.3	1151.1
2	0230	319	568.	41.0	1153.4	*	3	0620	653	28.	34.2	1151.1	*	4	1010	987	46.	34.3	1151.1
2	0235	320	572.	41.2	1153.4	*	3	0625	654	33.	34.2	1151.1	*	4	1015	988	46.	34.3	1151.1
2	0240	321	576.	41.3	1153.4	*	3	0630	655	43.	34.3	1151.1	*	4	1020	989	46.	34.3	1151.1
2	0245	322	577.	41.4	1153.4	*	3	0635	656	49.	34.4	1151.1	*	4	1025	990	46.	34.3	1151.1
2	0250	323	578.	41.4	1153.4	*	3	0640	657	52.	34.4	1151.1	*	4	1030	991	46.	34.3	1151.1
2	0255	324	577.	41.4	1153.4	*	3	0645	658	52.	34.4	1151.1	*	4	1035	992	46.	34.3	1151.1
2	0300	325	576.	41.3	1153.4	*	3	0650	659	53.	34.4	1151.1	*	4	1040	993	46.	34.3	1151.1
2	0305	326	574.	41.3	1153.4	*	3	0655	660	53.	34.4	1151.1	*	4	1045	994	46.	34.3	1151.1
2	0310	327	571.	41.1	1153.4	*	3	0700	661	53.	34.4	1151.1	*	4	1050	995	46.	34.3	1151.1
2	0315	328	568.	41.0	1153.4	*	3	0705	662	52.	34.4	1151.1	*	4	1055	996	46.	34.3	1151.1
2	0320	329	564.	40.8	1153.4	*	3	0710	663	52.	34.4	1151.1	*	4	1100	997	46.	34.3	1151.1
2	0325	330	560.	40.7	1153.4	*	3	0715	664	52.	34.4	1151.1	*	4	1105	998	46.	34.3	1151.1
2	0330	331	556.	40.5	1153.3	*	3	0720	665	52.	34.4	1151.1	*	4	1110	999	46.	34.3	1151.1
2	0335	332	551.	40.3	1153.3	*	3	0725	666	52.	34.4	1151.1	*	4	1115	1000	46.	34.3	1151.1
2	0340	333	546.	40.0	1153.3	*	3	0730	667	52.	34.4	1151.1	*						
2	0345	334	540.	39.8	1153.3	*	3	0735	668	52.	34.4	1151.1	*						
						*							*						

****

PEAK FLOW	TIME		MAXIMUM AVERAGE FLOW			
+ (CFS)	(HR)		6-HR	24-HR	72-HR	83.25-HR
+ 2881.	13.58	(CFS)	1460.	758.	311.	269.
		(INCHES)	0.456	0.947	1.164	1.164
		(AC-FT)	724.	1504.	1849.	1849.

PEAK STORAGE	TIME	MAXIMUM AVERAGE STORAGE			
+ (AC-FT)	(HR)	6-HR	24-HR	72-HR	83.25-HR
50.	13.58	47.	42.	36.	31.

PEAK STAGE	TIME	MAXIMUM AVERAGE STAGE			
+ (FEET)	(HR)	6-HR	24-HR	72-HR	83.25-HR
1154.41	13.58	1153.97	1153.18	1151.80	1150.34

CUMULATIVE AREA = 29.79 SQ MI

HWL in Forebay

```
*** *** *** *** *** *** *** *** *** *** *** *** *** *** *** *** *** *** *** *** *** *** *** *** *** *** *** *** *** *** *** *** *** *** ***

            **************
            *            *
 688 KK     *   DIVERT   *
            *            *
            **************

 690 KO          OUTPUT CONTROL VARIABLES
                      IPRNT          3  PRINT CONTROL
                      IPLOT          0  PLOT CONTROL
                      QSCAL         0.  HYDROGRAPH PLOT SCALE

     DT          DIVERSION
                      ISTAD        RCB  DIVERSION HYDROGRAPH IDENTIFICATION

     DI             INFLOW       0.00    636.00    748.00    934.00   1188.00   1497.00   1858.00   2261.00   2705.00   3194.00

     DQ      DIVERTED FLOW       0.00    636.00    659.00    682.00    705.00    728.00    751.00    774.00    796.00    818.00

                                                                  ***

      ***            ***            ***            ***            ***

                        DIVERSION HYDROGRAPH      RCB

  PEAK FLOW     TIME                          MAXIMUM AVERAGE FLOW
                                     6-HR       24-HR       72-HR     83.25-HR
+   (CFS)       (HR)
                          (CFS)
+    804.      13.58                718.        535.        236.        204.
                        (INCHES)   0.224       0.668       0.885       0.885
                         (AC-FT)    356.       1062.       1407.       1407.

                        CUMULATIVE AREA =   29.79 SQ MI

      ***            ***            ***            ***            ***

                        HYDROGRAPH AT STATION   DIVERT

  PEAK FLOW     TIME                          MAXIMUM AVERAGE FLOW
                                     6-HR       24-HR       72-HR     83.25-HR
+   (CFS)       (HR)
                          (CFS)
+   2077.      13.58                742.        223.         74.         64.
                        (INCHES)   0.232       0.278       0.278       0.278
                         (AC-FT)    368.        442.        442.        442.

                        CUMULATIVE AREA =   29.79 SQ MI


*** *** *** *** *** *** *** *** *** *** *** *** *** *** *** *** *** *** *** *** *** *** *** *** *** *** *** *** *** *** *** *** *** *** ***

            **************
            *            *
 694 KK     *    RBAS    *
            *            *
```

```
              **************

698 KO          OUTPUT CONTROL VARIABLES
                      IPRNT          2  PRINT CONTROL
                      IPLOT          0  PLOT CONTROL
                      QSCAL         0.  HYDROGRAPH PLOT SCALE

              HYDROGRAPH ROUTING DATA

699 RS          STORAGE ROUTING
                      NSTPS          1  NUMBER OF SUBREACHES
                       ITYP       STOR  TYPE OF INITIAL CONDITION
                     RSVRIC       0.00  INITIAL CONDITION
                          X       0.00 WORKING R AND D COEFFICIENT

700 SV            STORAGE        0.0     424.0     440.0     450.0

701 SE          ELEVATION    1130.00   1153.70   1154.50   1155.00

702 SQ          DISCHARGE        0.        0.        0.        0.
                                                          ***
```

****

HYDROGRAPH AT STATION RBAS

****

DA	MON	HRMN	ORD	OUTFLOW	STORAGE	STAGE	*	DA	MON	HRMN	ORD	OUTFLOW	STORAGE	STAGE	*	DA	MON	HRMN	ORD	OUTFLOW	STORAGE	STAGE
1		0000	1	0.	0.0	1130.0	*	2		0350	335	0.	442.3	1154.6	*	3		0740	669	0.	442.3	1154.6
1		0005	2	0.	0.0	1130.0	*	2		0355	336	0.	442.3	1154.6	*	3		0745	670	0.	442.3	1154.6
1		0010	3	0.	0.0	1130.0	*	2		0400	337	0.	442.3	1154.6	*	3		0750	671	0.	442.3	1154.6
1		0015	4	0.	0.0	1130.0	*	2		0405	338	0.	442.3	1154.6	*	3		0755	672	0.	442.3	1154.6
1		0020	5	0.	0.0	1130.0	*	2		0410	339	0.	442.3	1154.6	*	3		0800	673	0.	442.3	1154.6
1		0025	6	0.	0.0	1130.0	*	2		0415	340	0.	442.3	1154.6	*	3		0805	674	0.	442.3	1154.6
1		0030	7	0.	0.0	1130.0	*	2		0420	341	0.	442.3	1154.6	*	3		0810	675	0.	442.3	1154.6
1		0035	8	0.	0.0	1130.0	*	2		0425	342	0.	442.3	1154.6	*	3		0815	676	0.	442.3	1154.6
1		0040	9	0.	0.0	1130.0	*	2		0430	343	0.	442.3	1154.6	*	3		0820	677	0.	442.3	1154.6
1		0045	10	0.	0.0	1130.0	*	2		0435	344	0.	442.3	1154.6	*	3		0825	678	0.	442.3	1154.6
1		0050	11	0.	0.0	1130.0	*	2		0440	345	0.	442.3	1154.6	*	3		0830	679	0.	442.3	1154.6
1		0055	12	0.	0.0	1130.0	*	2		0445	346	0.	442.3	1154.6	*	3		0835	680	0.	442.3	1154.6
1		0100	13	0.	0.0	1130.0	*	2		0450	347	0.	442.3	1154.6	*	3		0840	681	0.	442.3	1154.6
1		0105	14	0.	0.0	1130.0	*	2		0455	348	0.	442.3	1154.6	*	3		0845	682	0.	442.3	1154.6
1		0110	15	0.	0.0	1130.0	*	2		0500	349	0.	442.3	1154.6	*	3		0850	683	0.	442.3	1154.6
1		0115	16	0.	0.0	1130.0	*	2		0505	350	0.	442.3	1154.6	*	3		0855	684	0.	442.3	1154.6
1		0120	17	0.	0.0	1130.0	*	2		0510	351	0.	442.3	1154.6	*	3		0900	685	0.	442.3	1154.6
1		0125	18	0.	0.0	1130.0	*	2		0515	352	0.	442.3	1154.6	*	3		0905	686	0.	442.3	1154.6
1		0130	19	0.	0.0	1130.0	*	2		0520	353	0.	442.3	1154.6	*	3		0910	687	0.	442.3	1154.6
1		0135	20	0.	0.0	1130.0	*	2		0525	354	0.	442.3	1154.6	*	3		0915	688	0.	442.3	1154.6
1		0140	21	0.	0.0	1130.0	*	2		0530	355	0.	442.3	1154.6	*	3		0920	689	0.	442.3	1154.6
1		0145	22	0.	0.0	1130.0	*	2		0535	356	0.	442.3	1154.6	*	3		0925	690	0.	442.3	1154.6
1		0150	23	0.	0.0	1130.0	*	2		0540	357	0.	442.3	1154.6	*	3		0930	691	0.	442.3	1154.6
1		0155	24	0.	0.0	1130.0	*	2		0545	358	0.	442.3	1154.6	*	3		0935	692	0.	442.3	1154.6
1		0200	25	0.	0.0	1130.0	*	2		0550	359	0.	442.3	1154.6	*	3		0940	693	0.	442.3	1154.6
1		0205	26	0.	0.0	1130.0	*	2		0555	360	0.	442.3	1154.6	*	3		0945	694	0.	442.3	1154.6
1		0210	27	0.	0.0	1130.0	*	2		0600	361	0.	442.3	1154.6	*	3		0950	695	0.	442.3	1154.6
1		0215	28	0.	0.0	1130.0	*	2		0605	362	0.	442.3	1154.6	*	3		0955	696	0.	442.3	1154.6
1		0220	29	0.	0.0	1130.0	*	2		0610	363	0.	442.3	1154.6	*	3		1000	697	0.	442.3	1154.6
1		0225	30	0.	0.0	1130.0	*	2		0615	364	0.	442.3	1154.6	*	3		1005	698	0.	442.3	1154.6
1		0230	31	0.	0.0	1130.0	*	2		0620	365	0.	442.3	1154.6	*	3		1010	699	0.	442.3	1154.6
1		0235	32	0.	0.0	1130.0	*	2		0625	366	0.	442.3	1154.6	*	3		1015	700	0.	442.3	1154.6
1		0240	33	0.	0.0	1130.0	*	2		0630	367	0.	442.3	1154.6	*	3		1020	701	0.	442.3	1154.6
1		0245	34	0.	0.0	1130.0	*	2		0635	368	0.	442.3	1154.6	*	3		1025	702	0.	442.3	1154.6
1		0250	35	0.	0.0	1130.0	*	2		0640	369	0.	442.3	1154.6	*	3		1030	703	0.	442.3	1154.6
1		0255	36	0.	0.0	1130.0	*	2		0645	370	0.	442.3	1154.6	*	3		1035	704	0.	442.3	1154.6

1	0300	37	0.	0.0	1130.0	*	2	0650	371	0.	442.3	1154.6	*	3	1040	705	0.	442.3	1154.6
1	0305	38	0.	0.0	1130.0	*	2	0655	372	0.	442.3	1154.6	*	3	1045	706	0.	442.3	1154.6
1	0310	39	0.	0.0	1130.0	*	2	0700	373	0.	442.3	1154.6	*	3	1050	707	0.	442.3	1154.6
1	0315	40	0.	0.0	1130.0	*	2	0705	374	0.	442.3	1154.6	*	3	1055	708	0.	442.3	1154.6
1	0320	41	0.	0.0	1130.0	*	2	0710	375	0.	442.3	1154.6	*	3	1100	709	0.	442.3	1154.6
1	0325	42	0.	0.0	1130.0	*	2	0715	376	0.	442.3	1154.6	*	3	1105	710	0.	442.3	1154.6
1	0330	43	0.	0.0	1130.0	*	2	0720	377	0.	442.3	1154.6	*	3	1110	711	0.	442.3	1154.6
1	0335	44	0.	0.0	1130.0	*	2	0725	378	0.	442.3	1154.6	*	3	1115	712	0.	442.3	1154.6
1	0340	45	0.	0.0	1130.0	*	2	0730	379	0.	442.3	1154.6	*	3	1120	713	0.	442.3	1154.6
1	0345	46	0.	0.0	1130.0	*	2	0735	380	0.	442.3	1154.6	*	3	1125	714	0.	442.3	1154.6
1	0350	47	0.	0.0	1130.0	*	2	0740	381	0.	442.3	1154.6	*	3	1130	715	0.	442.3	1154.6
1	0355	48	0.	0.0	1130.0	*	2	0745	382	0.	442.3	1154.6	*	3	1135	716	0.	442.3	1154.6
1	0400	49	0.	0.0	1130.0	*	2	0750	383	0.	442.3	1154.6	*	3	1140	717	0.	442.3	1154.6
1	0405	50	0.	0.0	1130.0	*	2	0755	384	0.	442.3	1154.6	*	3	1145	718	0.	442.3	1154.6
1	0410	51	0.	0.0	1130.0	*	2	0800	385	0.	442.3	1154.6	*	3	1150	719	0.	442.3	1154.6
1	0415	52	0.	0.0	1130.0	*	2	0805	386	0.	442.3	1154.6	*	3	1155	720	0.	442.3	1154.6
1	0420	53	0.	0.0	1130.0	*	2	0810	387	0.	442.3	1154.6	*	3	1200	721	0.	442.3	1154.6
1	0425	54	0.	0.0	1130.0	*	2	0815	388	0.	442.3	1154.6	*	3	1205	722	0.	442.3	1154.6
1	0430	55	0.	0.0	1130.0	*	2	0820	389	0.	442.3	1154.6	*	3	1210	723	0.	442.3	1154.6
1	0435	56	0.	0.0	1130.0	*	2	0825	390	0.	442.3	1154.6	*	3	1215	724	0.	442.3	1154.6
1	0440	57	0.	0.0	1130.0	*	2	0830	391	0.	442.3	1154.6	*	3	1220	725	0.	442.3	1154.6
1	0445	58	0.	0.0	1130.0	*	2	0835	392	0.	442.3	1154.6	*	3	1225	726	0.	442.2	1154.6
1	0450	59	0.	0.0	1130.0	*	2	0840	393	0.	442.3	1154.6	*	3	1230	727	0.	442.2	1154.6
1	0455	60	0.	0.0	1130.0	*	2	0845	394	0.	442.3	1154.6	*	3	1235	728	0.	442.2	1154.6
1	0500	61	0.	0.0	1130.0	*	2	0850	395	0.	442.3	1154.6	*	3	1240	729	0.	442.2	1154.6
1	0505	62	0.	0.0	1130.0	*	2	0855	396	0.	442.3	1154.6	*	3	1245	730	0.	442.2	1154.6
1	0510	63	0.	0.0	1130.0	*	2	0900	397	0.	442.3	1154.6	*	3	1250	731	0.	442.2	1154.6
1	0515	64	0.	0.0	1130.0	*	2	0905	398	0.	442.3	1154.6	*	3	1255	732	0.	442.2	1154.6
1	0520	65	0.	0.0	1130.0	*	2	0910	399	0.	442.3	1154.6	*	3	1300	733	0.	442.2	1154.6
1	0525	66	0.	0.0	1130.0	*	2	0915	400	0.	442.3	1154.6	*	3	1305	734	0.	442.2	1154.6
1	0530	67	0.	0.0	1130.0	*	2	0920	401	0.	442.3	1154.6	*	3	1310	735	0.	442.2	1154.6
1	0535	68	0.	0.0	1130.0	*	2	0925	402	0.	442.3	1154.6	*	3	1315	736	0.	442.2	1154.6
1	0540	69	0.	0.0	1130.0	*	2	0930	403	0.	442.3	1154.6	*	3	1320	737	0.	442.2	1154.6
1	0545	70	0.	0.0	1130.0	*	2	0935	404	0.	442.3	1154.6	*	3	1325	738	0.	442.2	1154.6
1	0550	71	0.	0.0	1130.0	*	2	0940	405	0.	442.3	1154.6	*	3	1330	739	0.	442.2	1154.6
1	0555	72	0.	0.0	1130.0	*	2	0945	406	0.	442.3	1154.6	*	3	1335	740	0.	442.2	1154.6
1	0600	73	0.	0.0	1130.0	*	2	0950	407	0.	442.3	1154.6	*	3	1340	741	0.	442.2	1154.6
1	0605	74	0.	0.0	1130.0	*	2	0955	408	0.	442.3	1154.6	*	3	1345	742	0.	442.2	1154.6
1	0610	75	0.	0.0	1130.0	*	2	1000	409	0.	442.3	1154.6	*	3	1350	743	0.	442.2	1154.6
1	0615	76	0.	0.0	1130.0	*	2	1005	410	0.	442.3	1154.6	*	3	1355	744	0.	442.2	1154.6
1	0620	77	0.	0.0	1130.0	*	2	1010	411	0.	442.3	1154.6	*	3	1400	745	0.	442.2	1154.6
1	0625	78	0.	0.0	1130.0	*	2	1015	412	0.	442.3	1154.6	*	3	1405	746	0.	442.2	1154.6
1	0630	79	0.	0.0	1130.0	*	2	1020	413	0.	442.3	1154.6	*	3	1410	747	0.	442.2	1154.6
1	0635	80	0.	0.0	1130.0	*	2	1025	414	0.	442.3	1154.6	*	3	1415	748	0.	442.2	1154.6
1	0640	81	0.	0.0	1130.0	*	2	1030	415	0.	442.3	1154.6	*	3	1420	749	0.	442.2	1154.6
1	0645	82	0.	0.0	1130.0	*	2	1035	416	0.	442.3	1154.6	*	3	1425	750	0.	442.2	1154.6
1	0650	83	0.	0.0	1130.0	*	2	1040	417	0.	442.3	1154.6	*	3	1430	751	0.	442.2	1154.6
1	0655	84	0.	0.0	1130.0	*	2	1045	418	0.	442.3	1154.6	*	3	1435	752	0.	442.2	1154.6
1	0700	85	0.	0.0	1130.0	*	2	1050	419	0.	442.3	1154.6	*	3	1440	753	0.	442.2	1154.6
1	0705	86	0.	0.0	1130.0	*	2	1055	420	0.	442.3	1154.6	*	3	1445	754	0.	442.2	1154.6
1	0710	87	0.	0.0	1130.0	*	2	1100	421	0.	442.3	1154.6	*	3	1450	755	0.	442.2	1154.6
1	0715	88	0.	0.0	1130.0	*	2	1105	422	0.	442.3	1154.6	*	3	1455	756	0.	442.2	1154.6
1	0720	89	0.	0.0	1130.0	*	2	1110	423	0.	442.3	1154.6	*	3	1500	757	0.	442.2	1154.6
1	0725	90	0.	0.0	1130.0	*	2	1115	424	0.	442.3	1154.6	*	3	1505	758	0.	442.2	1154.6
1	0730	91	0.	0.0	1130.0	*	2	1120	425	0.	442.3	1154.6	*	3	1510	759	0.	442.2	1154.6
1	0735	92	0.	0.0	1130.0	*	2	1125	426	0.	442.3	1154.6	*	3	1515	760	0.	442.2	1154.6
1	0740	93	0.	0.0	1130.0	*	2	1130	427	0.	442.3	1154.6	*	3	1520	761	0.	442.2	1154.6
1	0745	94	0.	0.0	1130.0	*	2	1135	428	0.	442.3	1154.6	*	3	1525	762	0.	442.2	1154.6
1	0750	95	0.	0.0	1130.0	*	2	1140	429	0.	442.3	1154.6	*	3	1530	763	0.	442.2	1154.6
1	0755	96	0.	0.0	1130.0	*	2	1145	430	0.	442.3	1154.6	*	3	1535	764	0.	442.2	1154.6
1	0800	97	0.	0.0	1130.0	*	2	1150	431	0.	442.3	1154.6	*	3	1540	765	0.	442.2	1154.6
1	0805	98	0.	0.0	1130.0	*	2	1155	432	0.	442.3	1154.6	*	3	1545	766	0.	442.2	1154.6
1	0810	99	0.	0.0	1130.0	*	2	1200	433	0.	442.3	1154.6	*	3	1550	767	0.	442.2	1154.6
1	0815	100	0.	0.0	1130.0	*	2	1205	434	0.	442.3	1154.6	*	3	1555	768	0.	442.2	1154.6
1	0820	101	0.	0.0	1130.0	*	2	1210	435	0.	442.3	1154.6	*	3	1600	769	0.	442.2	1154.6
1	0825	102	0.	0.0	1130.0	*	2	1215	436	0.	442.3	1154.6	*	3	1605	770	0.	442.2	1154.6
1	0830	103	0.	0.0	1130.0	*	2	1220	437	0.	442.3	1154.6	*	3	1610	771	0.	442.2	1154.6

1	0835	104	0.	0.0	1130.0	*	2	1225	438	0.	442.3	1154.6	*	3	1615	772	0.	442.2	1154.6
1	0840	105	0.	0.0	1130.0	*	2	1230	439	0.	442.3	1154.6	*	3	1620	773	0.	442.2	1154.6
1	0845	106	0.	0.0	1130.0	*	2	1235	440	0.	442.3	1154.6	*	3	1625	774	0.	442.2	1154.6
1	0850	107	0.	0.0	1130.0	*	2	1240	441	0.	442.3	1154.6	*	3	1630	775	0.	442.2	1154.6
1	0855	108	0.	0.0	1130.0	*	2	1245	442	0.	442.3	1154.6	*	3	1635	776	0.	442.2	1154.6
1	0900	109	0.	0.0	1130.0	*	2	1250	443	0.	442.3	1154.6	*	3	1640	777	0.	442.2	1154.6
1	0905	110	0.	0.0	1130.0	*	2	1255	444	0.	442.3	1154.6	*	3	1645	778	0.	442.2	1154.6
1	0910	111	0.	0.0	1130.0	*	2	1300	445	0.	442.3	1154.6	*	3	1650	779	0.	442.2	1154.6
1	0915	112	0.	0.0	1130.0	*	2	1305	446	0.	442.3	1154.6	*	3	1655	780	0.	442.2	1154.6
1	0920	113	0.	0.0	1130.0	*	2	1310	447	0.	442.3	1154.6	*	3	1700	781	0.	442.2	1154.6
1	0925	114	0.	0.0	1130.0	*	2	1315	448	0.	442.3	1154.6	*	3	1705	782	0.	442.2	1154.6
1	0930	115	0.	0.0	1130.0	*	2	1320	449	0.	442.3	1154.6	*	3	1710	783	0.	442.2	1154.6
1	0935	116	0.	0.0	1130.0	*	2	1325	450	0.	442.3	1154.6	*	3	1715	784	0.	442.2	1154.6
1	0940	117	0.	0.0	1130.0	*	2	1330	451	0.	442.3	1154.6	*	3	1720	785	0.	442.2	1154.6
1	0945	118	0.	0.0	1130.0	*	2	1335	452	0.	442.3	1154.6	*	3	1725	786	0.	442.2	1154.6
1	0950	119	0.	0.0	1130.0	*	2	1340	453	0.	442.3	1154.6	*	3	1730	787	0.	442.2	1154.6
1	0955	120	0.	0.0	1130.0	*	2	1345	454	0.	442.3	1154.6	*	3	1735	788	0.	442.2	1154.6
1	1000	121	0.	0.0	1130.0	*	2	1350	455	0.	442.3	1154.6	*	3	1740	789	0.	442.2	1154.6
1	1005	122	0.	0.0	1130.0	*	2	1355	456	0.	442.3	1154.6	*	3	1745	790	0.	442.2	1154.6
1	1010	123	0.	0.0	1130.0	*	2	1400	457	0.	442.3	1154.6	*	3	1750	791	0.	442.2	1154.6
1	1015	124	0.	0.0	1130.0	*	2	1405	458	0.	442.3	1154.6	*	3	1755	792	0.	442.2	1154.6
1	1020	125	0.	0.0	1130.0	*	2	1410	459	0.	442.3	1154.6	*	3	1800	793	0.	442.2	1154.6
1	1025	126	0.	0.0	1130.0	*	2	1415	460	0.	442.3	1154.6	*	3	1805	794	0.	442.2	1154.6
1	1030	127	0.	0.0	1130.0	*	2	1420	461	0.	442.3	1154.6	*	3	1810	795	0.	442.2	1154.6
1	1035	128	0.	0.0	1130.0	*	2	1425	462	0.	442.3	1154.6	*	3	1815	796	0.	442.2	1154.6
1	1040	129	0.	0.0	1130.0	*	2	1430	463	0.	442.3	1154.6	*	3	1820	797	0.	442.2	1154.6
1	1045	130	0.	0.0	1130.0	*	2	1435	464	0.	442.3	1154.6	*	3	1825	798	0.	442.2	1154.6
1	1050	131	0.	0.0	1130.0	*	2	1440	465	0.	442.3	1154.6	*	3	1830	799	0.	442.2	1154.6
1	1055	132	0.	0.0	1130.0	*	2	1445	466	0.	442.3	1154.6	*	3	1835	800	0.	442.2	1154.6
1	1100	133	0.	0.0	1130.0	*	2	1450	467	0.	442.3	1154.6	*	3	1840	801	0.	442.2	1154.6
1	1105	134	0.	0.0	1130.0	*	2	1455	468	0.	442.3	1154.6	*	3	1845	802	0.	442.2	1154.6
1	1110	135	0.	0.0	1130.0	*	2	1500	469	0.	442.3	1154.6	*	3	1850	803	0.	442.2	1154.6
1	1115	136	0.	0.0	1130.0	*	2	1505	470	0.	442.3	1154.6	*	3	1855	804	0.	442.2	1154.6
1	1120	137	0.	0.0	1130.0	*	2	1510	471	0.	442.3	1154.6	*	3	1900	805	0.	442.2	1154.6
1	1125	138	0.	0.0	1130.0	*	2	1515	472	0.	442.3	1154.6	*	3	1905	806	0.	442.2	1154.6
1	1130	139	0.	0.0	1130.0	*	2	1520	473	0.	442.3	1154.6	*	3	1910	807	0.	442.2	1154.6
1	1135	140	0.	0.0	1130.0	*	2	1525	474	0.	442.3	1154.6	*	3	1915	808	0.	442.2	1154.6
1	1140	141	0.	0.0	1130.0	*	2	1530	475	0.	442.3	1154.6	*	3	1920	809	0.	442.2	1154.6
1	1145	142	0.	0.0	1130.0	*	2	1535	476	0.	442.3	1154.6	*	3	1925	810	0.	442.2	1154.6
1	1150	143	0.	0.0	1130.0	*	2	1540	477	0.	442.3	1154.6	*	3	1930	811	0.	442.2	1154.6
1	1155	144	0.	0.0	1130.0	*	2	1545	478	0.	442.3	1154.6	*	3	1935	812	0.	442.2	1154.6
1	1200	145	0.	0.0	1130.0	*	2	1550	479	0.	442.3	1154.6	*	3	1940	813	0.	442.2	1154.6
1	1205	146	0.	0.0	1130.0	*	2	1555	480	0.	442.3	1154.6	*	3	1945	814	0.	442.2	1154.6
1	1210	147	0.	0.0	1130.0	*	2	1600	481	0.	442.3	1154.6	*	3	1950	815	0.	442.2	1154.6
1	1215	148	0.	0.0	1130.0	*	2	1605	482	0.	442.3	1154.6	*	3	1955	816	0.	442.2	1154.6
1	1220	149	0.	0.0	1130.0	*	2	1610	483	0.	442.3	1154.6	*	3	2000	817	0.	442.2	1154.6
1	1225	150	0.	0.0	1130.0	*	2	1615	484	0.	442.3	1154.6	*	3	2005	818	0.	442.2	1154.6
1	1230	151	0.	0.0	1130.0	*	2	1620	485	0.	442.3	1154.6	*	3	2010	819	0.	442.2	1154.6
1	1235	152	0.	0.0	1130.0	*	2	1625	486	0.	442.3	1154.6	*	3	2015	820	0.	442.2	1154.6
1	1240	153	0.	0.0	1130.0	*	2	1630	487	0.	442.3	1154.6	*	3	2020	821	0.	442.2	1154.6
1	1245	154	0.	0.0	1130.0	*	2	1635	488	0.	442.3	1154.6	*	3	2025	822	0.	442.2	1154.6
1	1250	155	0.	0.0	1130.0	*	2	1640	489	0.	442.3	1154.6	*	3	2030	823	0.	442.2	1154.6
1	1255	156	0.	2.7	1130.2	*	2	1645	490	0.	442.3	1154.6	*	3	2035	824	0.	442.2	1154.6
1	1300	157	0.	9.4	1130.5	*	2	1650	491	0.	442.3	1154.6	*	3	2040	825	0.	442.2	1154.6
1	1305	158	0.	18.0	1131.0	*	2	1655	492	0.	442.3	1154.6	*	3	2045	826	0.	442.2	1154.6
1	1310	159	0.	27.8	1131.6	*	2	1700	493	0.	442.3	1154.6	*	3	2050	827	0.	442.2	1154.6
1	1315	160	0.	38.8	1132.2	*	2	1705	494	0.	442.3	1154.6	*	3	2055	828	0.	442.2	1154.6
1	1320	161	0.	50.9	1132.8	*	2	1710	495	0.	442.3	1154.6	*	3	2100	829	0.	442.2	1154.6
1	1325	162	0.	63.9	1133.6	*	2	1715	496	0.	442.3	1154.6	*	3	2105	830	0.	442.2	1154.6
1	1330	163	0.	77.7	1134.3	*	2	1720	497	0.	442.3	1154.6	*	3	2110	831	0.	442.2	1154.6
1	1335	164	0.	91.8	1135.1	*	2	1725	498	0.	442.3	1154.6	*	3	2115	832	0.	442.2	1154.6
1	1340	165	0.	106.0	1135.9	*	2	1730	499	0.	442.3	1154.6	*	3	2120	833	0.	442.2	1154.6
1	1345	166	0.	119.7	1136.7	*	2	1735	500	0.	442.3	1154.6	*	3	2125	834	0.	442.2	1154.6
1	1350	167	0.	132.1	1137.4	*	2	1740	501	0.	442.3	1154.6	*	3	2130	835	0.	442.2	1154.6
1	1355	168	0.	142.9	1138.0	*	2	1745	502	0.	442.3	1154.6	*	3	2135	836	0.	442.2	1154.6
1	1400	169	0.	152.1	1138.5	*	2	1750	503	0.	442.3	1154.6	*	3	2140	837	0.	442.2	1154.6
1	1405	170	0.	160.5	1139.0	*	2	1755	504	0.	442.3	1154.6	*	3	2145	838	0.	442.2	1154.6

1	1410	171	0.	169.3	1139.5	*	2	1800	505	0.	442.3	1154.6	*	3	2150	839	0.	442.2	1154.6
1	1415	172	0.	178.6	1140.0	*	2	1805	506	0.	442.3	1154.6	*	3	2155	840	0.	442.2	1154.6
1	1420	173	0.	188.0	1140.5	*	2	1810	507	0.	442.3	1154.6	*	3	2200	841	0.	442.2	1154.6
1	1425	174	0.	196.9	1141.0	*	2	1815	508	0.	442.3	1154.6	*	3	2205	842	0.	442.2	1154.6
1	1430	175	0.	205.6	1141.5	*	2	1820	509	0.	442.3	1154.6	*	3	2210	843	0.	442.2	1154.6
1	1435	176	0.	214.0	1142.0	*	2	1825	510	0.	442.3	1154.6	*	3	2215	844	0.	442.2	1154.6
1	1440	177	0.	222.3	1142.4	*	2	1830	511	0.	442.3	1154.6	*	3	2220	845	0.	442.2	1154.6
1	1445	178	0.	230.5	1142.9	*	2	1835	512	0.	442.3	1154.6	*	3	2225	846	0.	442.2	1154.6
1	1450	179	0.	238.4	1143.3	*	2	1840	513	0.	442.3	1154.6	*	3	2230	847	0.	442.2	1154.6
1	1455	180	0.	245.9	1143.7	*	2	1845	514	0.	442.3	1154.6	*	3	2235	848	0.	442.2	1154.6
1	1500	181	0.	253.0	1144.1	*	2	1850	515	0.	442.3	1154.6	*	3	2240	849	0.	442.2	1154.6
1	1505	182	0.	259.8	1144.5	*	2	1855	516	0.	442.3	1154.6	*	3	2245	850	0.	442.2	1154.6
1	1510	183	0.	266.2	1144.9	*	2	1900	517	0.	442.3	1154.6	*	3	2250	851	0.	442.2	1154.6
1	1515	184	0.	272.3	1145.2	*	2	1905	518	0.	442.3	1154.6	*	3	2255	852	0.	442.2	1154.6
1	1520	185	0.	278.0	1145.5	*	2	1910	519	0.	442.3	1154.6	*	3	2300	853	0.	442.2	1154.6
1	1525	186	0.	283.5	1145.8	*	2	1915	520	0.	442.3	1154.6	*	3	2305	854	0.	442.2	1154.6
1	1530	187	0.	288.8	1146.1	*	2	1920	521	0.	442.3	1154.6	*	3	2310	855	0.	442.2	1154.6
1	1535	188	0.	293.8	1146.4	*	2	1925	522	0.	442.3	1154.6	*	3	2315	856	0.	442.2	1154.6
1	1540	189	0.	298.6	1146.7	*	2	1930	523	0.	442.3	1154.6	*	3	2320	857	0.	442.2	1154.6
1	1545	190	0.	303.1	1146.9	*	2	1935	524	0.	442.3	1154.6	*	3	2325	858	0.	442.2	1154.6
1	1550	191	0.	307.1	1147.2	*	2	1940	525	0.	442.3	1154.6	*	3	2330	859	0.	442.2	1154.6
1	1555	192	0.	310.5	1147.4	*	2	1945	526	0.	442.3	1154.6	*	3	2335	860	0.	442.2	1154.6
1	1600	193	0.	313.2	1147.5	*	2	1950	527	0.	442.3	1154.6	*	3	2340	861	0.	442.2	1154.6
1	1605	194	0.	315.5	1147.6	*	2	1955	528	0.	442.3	1154.6	*	3	2345	862	0.	442.2	1154.6
1	1610	195	0.	318.0	1147.8	*	2	2000	529	0.	442.3	1154.6	*	3	2350	863	0.	442.2	1154.6
1	1615	196	0.	320.8	1147.9	*	2	2005	530	0.	442.3	1154.6	*	3	2355	864	0.	442.2	1154.6
1	1620	197	0.	323.8	1148.1	*	2	2010	531	0.	442.3	1154.6	*	4	0000	865	0.	442.2	1154.6
1	1625	198	0.	326.8	1148.3	*	2	2015	532	0.	442.3	1154.6	*	4	0005	866	0.	442.2	1154.6
1	1630	199	0.	329.5	1148.4	*	2	2020	533	0.	442.3	1154.6	*	4	0010	867	0.	442.2	1154.6
1	1635	200	0.	332.2	1148.6	*	2	2025	534	0.	442.3	1154.6	*	4	0015	868	0.	442.2	1154.6
1	1640	201	0.	334.6	1148.7	*	2	2030	535	0.	442.3	1154.6	*	4	0020	869	0.	442.2	1154.6
1	1645	202	0.	337.0	1148.8	*	2	2035	536	0.	442.3	1154.6	*	4	0025	870	0.	442.2	1154.6
1	1650	203	0.	339.2	1149.0	*	2	2040	537	0.	442.3	1154.6	*	4	0030	871	0.	442.2	1154.6
1	1655	204	0.	341.3	1149.1	*	2	2045	538	0.	442.3	1154.6	*	4	0035	872	0.	442.2	1154.6
1	1700	205	0.	343.4	1149.2	*	2	2050	539	0.	442.3	1154.6	*	4	0040	873	0.	442.2	1154.6
1	1705	206	0.	345.3	1149.3	*	2	2055	540	0.	442.3	1154.6	*	4	0045	874	0.	442.2	1154.6
1	1710	207	0.	347.1	1149.4	*	2	2100	541	0.	442.3	1154.6	*	4	0050	875	0.	442.2	1154.6
1	1715	208	0.	348.8	1149.5	*	2	2105	542	0.	442.3	1154.6	*	4	0055	876	0.	442.2	1154.6
1	1720	209	0.	350.3	1149.6	*	2	2110	543	0.	442.3	1154.6	*	4	0100	877	0.	442.2	1154.6
1	1725	210	0.	351.8	1149.7	*	2	2115	544	0.	442.3	1154.6	*	4	0105	878	0.	442.2	1154.6
1	1730	211	0.	353.1	1149.7	*	2	2120	545	0.	442.3	1154.6	*	4	0110	879	0.	442.2	1154.6
1	1735	212	0.	354.4	1149.8	*	2	2125	546	0.	442.3	1154.6	*	4	0115	880	0.	442.2	1154.6
1	1740	213	0.	355.6	1149.9	*	2	2130	547	0.	442.3	1154.6	*	4	0120	881	0.	442.2	1154.6
1	1745	214	0.	356.7	1149.9	*	2	2135	548	0.	442.3	1154.6	*	4	0125	882	0.	442.2	1154.6
1	1750	215	0.	357.8	1150.0	*	2	2140	549	0.	442.3	1154.6	*	4	0130	883	0.	442.2	1154.6
1	1755	216	0.	358.6	1150.0	*	2	2145	550	0.	442.3	1154.6	*	4	0135	884	0.	442.2	1154.6
1	1800	217	0.	358.9	1150.1	*	2	2150	551	0.	442.3	1154.6	*	4	0140	885	0.	442.2	1154.6
1	1805	218	0.	359.0	1150.1	*	2	2155	552	0.	442.3	1154.6	*	4	0145	886	0.	442.2	1154.6
1	1810	219	0.	359.2	1150.1	*	2	2200	553	0.	442.3	1154.6	*	4	0150	887	0.	442.2	1154.6
1	1815	220	0.	359.9	1150.1	*	2	2205	554	0.	442.3	1154.6	*	4	0155	888	0.	442.2	1154.6
1	1820	221	0.	361.0	1150.2	*	2	2210	555	0.	442.3	1154.6	*	4	0200	889	0.	442.2	1154.6
1	1825	222	0.	362.2	1150.2	*	2	2215	556	0.	442.3	1154.6	*	4	0205	890	0.	442.2	1154.6
1	1830	223	0.	363.4	1150.3	*	2	2220	557	0.	442.3	1154.6	*	4	0210	891	0.	442.2	1154.6
1	1835	224	0.	364.6	1150.4	*	2	2225	558	0.	442.3	1154.6	*	4	0215	892	0.	442.2	1154.6
1	1840	225	0.	365.8	1150.4	*	2	2230	559	0.	442.3	1154.6	*	4	0220	893	0.	442.2	1154.6
1	1845	226	0.	367.0	1150.5	*	2	2235	560	0.	442.3	1154.6	*	4	0225	894	0.	442.2	1154.6
1	1850	227	0.	368.1	1150.6	*	2	2240	561	0.	442.3	1154.6	*	4	0230	895	0.	442.2	1154.6
1	1855	228	0.	369.3	1150.6	*	2	2245	562	0.	442.3	1154.6	*	4	0235	896	0.	442.2	1154.6
1	1900	229	0.	370.5	1150.7	*	2	2250	563	0.	442.3	1154.6	*	4	0240	897	0.	442.2	1154.6
1	1905	230	0.	371.7	1150.8	*	2	2255	564	0.	442.3	1154.6	*	4	0245	898	0.	442.2	1154.6
1	1910	231	0.	372.9	1150.8	*	2	2300	565	0.	442.3	1154.6	*	4	0250	899	0.	442.2	1154.6
1	1915	232	0.	374.1	1150.9	*	2	2305	566	0.	442.3	1154.6	*	4	0255	900	0.	442.2	1154.6
1	1920	233	0.	375.4	1151.0	*	2	2310	567	0.	442.3	1154.6	*	4	0300	901	0.	442.2	1154.6
1	1925	234	0.	376.7	1151.1	*	2	2315	568	0.	442.3	1154.6	*	4	0305	902	0.	442.2	1154.6
1	1930	235	0.	378.0	1151.1	*	2	2320	569	0.	442.3	1154.6	*	4	0310	903	0.	442.2	1154.6
1	1935	236	0.	379.2	1151.2	*	2	2325	570	0.	442.3	1154.6	*	4	0315	904	0.	442.2	1154.6
1	1940	237	0.	380.4	1151.3	*	2	2330	571	0.	442.3	1154.6	*	4	0320	905	0.	442.2	1154.6

1	1945	238	0.	381.6	1151.3	*	2	2335	572	0.	442.3	1154.6	*	4	0325	906	0.	442.2	1154.6
1	1950	239	0.	382.6	1151.4	*	2	2340	573	0.	442.3	1154.6	*	4	0330	907	0.	442.2	1154.6
1	1955	240	0.	383.1	1151.4	*	2	2345	574	0.	442.3	1154.6	*	4	0335	908	0.	442.2	1154.6
1	2000	241	0.	383.3	1151.4	*	2	2350	575	0.	442.3	1154.6	*	4	0340	909	0.	442.2	1154.6
1	2005	242	0.	383.3	1151.4	*	2	2355	576	0.	442.3	1154.6	*	4	0345	910	0.	442.2	1154.6
1	2010	243	0.	383.3	1151.4	*	3	0000	577	0.	442.3	1154.6	*	4	0350	911	0.	442.2	1154.6
1	2015	244	0.	383.8	1151.5	*	3	0005	578	0.	442.3	1154.6	*	4	0355	912	0.	442.2	1154.6
1	2020	245	0.	384.8	1151.5	*	3	0010	579	0.	442.3	1154.6	*	4	0400	913	0.	442.2	1154.6
1	2025	246	0.	386.0	1151.6	*	3	0015	580	0.	442.3	1154.6	*	4	0405	914	0.	442.2	1154.6
1	2030	247	0.	387.2	1151.6	*	3	0020	581	0.	442.3	1154.6	*	4	0410	915	0.	442.2	1154.6
1	2035	248	0.	388.4	1151.7	*	3	0025	582	0.	442.3	1154.6	*	4	0415	916	0.	442.2	1154.6
1	2040	249	0.	389.6	1151.8	*	3	0030	583	0.	442.3	1154.6	*	4	0420	917	0.	442.2	1154.6
1	2045	250	0.	390.8	1151.8	*	3	0035	584	0.	442.3	1154.6	*	4	0425	918	0.	442.2	1154.6
1	2050	251	0.	392.0	1151.9	*	3	0040	585	0.	442.3	1154.6	*	4	0430	919	0.	442.2	1154.6
1	2055	252	0.	393.3	1152.0	*	3	0045	586	0.	442.3	1154.6	*	4	0435	920	0.	442.2	1154.6
1	2100	253	0.	394.5	1152.1	*	3	0050	587	0.	442.3	1154.6	*	4	0440	921	0.	442.2	1154.6
1	2105	254	0.	395.8	1152.1	*	3	0055	588	0.	442.3	1154.6	*	4	0445	922	0.	442.2	1154.6
1	2110	255	0.	397.0	1152.2	*	3	0100	589	0.	442.3	1154.6	*	4	0450	923	0.	442.2	1154.6
1	2115	256	0.	398.3	1152.3	*	3	0105	590	0.	442.3	1154.6	*	4	0455	924	0.	442.2	1154.6
1	2120	257	0.	399.6	1152.3	*	3	0110	591	0.	442.3	1154.6	*	4	0500	925	0.	442.2	1154.6
1	2125	258	0.	400.8	1152.4	*	3	0115	592	0.	442.3	1154.6	*	4	0505	926	0.	442.2	1154.6
1	2130	259	0.	402.1	1152.5	*	3	0120	593	0.	442.3	1154.6	*	4	0510	927	0.	442.2	1154.6
1	2135	260	0.	403.3	1152.5	*	3	0125	594	0.	442.3	1154.6	*	4	0515	928	0.	442.2	1154.6
1	2140	261	0.	404.6	1152.6	*	3	0130	595	0.	442.3	1154.6	*	4	0520	929	0.	442.2	1154.6
1	2145	262	0.	405.8	1152.7	*	3	0135	596	0.	442.3	1154.6	*	4	0525	930	0.	442.2	1154.6
1	2150	263	0.	406.8	1152.7	*	3	0140	597	0.	442.3	1154.6	*	4	0530	931	0.	442.2	1154.6
1	2155	264	0.	407.4	1152.8	*	3	0145	598	0.	442.3	1154.6	*	4	0535	932	0.	442.2	1154.6
1	2200	265	0.	407.5	1152.8	*	3	0150	599	0.	442.3	1154.6	*	4	0540	933	0.	442.2	1154.6
1	2205	266	0.	407.5	1152.8	*	3	0155	600	0.	442.3	1154.6	*	4	0545	934	0.	442.2	1154.6
1	2210	267	0.	407.5	1152.8	*	3	0200	601	0.	442.3	1154.6	*	4	0550	935	0.	442.2	1154.6
1	2215	268	0.	407.9	1152.8	*	3	0205	602	0.	442.3	1154.6	*	4	0555	936	0.	442.2	1154.6
1	2220	269	0.	408.9	1152.9	*	3	0210	603	0.	442.3	1154.6	*	4	0600	937	0.	442.2	1154.6
1	2225	270	0.	410.1	1152.9	*	3	0215	604	0.	442.3	1154.6	*	4	0605	938	0.	442.2	1154.6
1	2230	271	0.	411.5	1153.0	*	3	0220	605	0.	442.3	1154.6	*	4	0610	939	0.	442.2	1154.6
1	2235	272	0.	412.8	1153.1	*	3	0225	606	0.	442.3	1154.6	*	4	0615	940	0.	442.2	1154.6
1	2240	273	0.	414.1	1153.1	*	3	0230	607	0.	442.3	1154.6	*	4	0620	941	0.	442.2	1154.6
1	2245	274	0.	415.3	1153.2	*	3	0235	608	0.	442.3	1154.6	*	4	0625	942	0.	442.2	1154.6
1	2250	275	0.	416.5	1153.3	*	3	0240	609	0.	442.3	1154.6	*	4	0630	943	0.	442.2	1154.6
1	2255	276	0.	417.7	1153.3	*	3	0245	610	0.	442.3	1154.6	*	4	0635	944	0.	442.2	1154.6
1	2300	277	0.	418.9	1153.4	*	3	0250	611	0.	442.3	1154.6	*	4	0640	945	0.	442.2	1154.6
1	2305	278	0.	420.1	1153.5	*	3	0255	612	0.	442.3	1154.6	*	4	0645	946	0.	442.2	1154.6
1	2310	279	0.	421.3	1153.6	*	3	0300	613	0.	442.3	1154.6	*	4	0650	947	0.	442.2	1154.6
1	2315	280	0.	422.5	1153.6	*	3	0305	614	0.	442.3	1154.6	*	4	0655	948	0.	442.2	1154.6
1	2320	281	0.	423.7	1153.7	*	3	0310	615	0.	442.3	1154.6	*	4	0700	949	0.	442.2	1154.6
1	2325	282	0.	424.8	1153.7	*	3	0315	616	0.	442.3	1154.6	*	4	0705	950	0.	442.2	1154.6
1	2330	283	0.	426.0	1153.8	*	3	0320	617	0.	442.3	1154.6	*	4	0710	951	0.	442.2	1154.6
1	2335	284	0.	427.1	1153.9	*	3	0325	618	0.	442.3	1154.6	*	4	0715	952	0.	442.2	1154.6
1	2340	285	0.	428.3	1153.9	*	3	0330	619	0.	442.3	1154.6	*	4	0720	953	0.	442.2	1154.6
1	2345	286	0.	429.4	1154.0	*	3	0335	620	0.	442.3	1154.6	*	4	0725	954	0.	442.2	1154.6
1	2350	287	0.	430.3	1154.0	*	3	0340	621	0.	442.3	1154.6	*	4	0730	955	0.	442.2	1154.6
1	2355	288	0.	430.8	1154.0	*	3	0345	622	0.	442.3	1154.6	*	4	0735	956	0.	442.2	1154.6
2	0000	289	0.	430.9	1154.0	*	3	0350	623	0.	442.3	1154.6	*	4	0740	957	0.	442.2	1154.6
2	0005	290	0.	430.9	1154.0	*	3	0355	624	0.	442.3	1154.6	*	4	0745	958	0.	442.2	1154.6
2	0010	291	0.	430.9	1154.0	*	3	0400	625	0.	442.3	1154.6	*	4	0750	959	0.	442.2	1154.6
2	0015	292	0.	430.9	1154.0	*	3	0405	626	0.	442.3	1154.6	*	4	0755	960	0.	442.2	1154.6
2	0020	293	0.	431.4	1154.1	*	3	0410	627	0.	442.3	1154.6	*	4	0800	961	0.	442.2	1154.6
2	0025	294	0.	432.4	1154.1	*	3	0415	628	0.	442.3	1154.6	*	4	0805	962	0.	442.2	1154.6
2	0030	295	0.	433.3	1154.2	*	3	0420	629	0.	442.3	1154.6	*	4	0810	963	0.	442.2	1154.6
2	0035	296	0.	434.3	1154.2	*	3	0425	630	0.	442.3	1154.6	*	4	0815	964	0.	442.2	1154.6
2	0040	297	0.	435.1	1154.3	*	3	0430	631	0.	442.3	1154.6	*	4	0820	965	0.	442.2	1154.6
2	0045	298	0.	436.0	1154.3	*	3	0435	632	0.	442.3	1154.6	*	4	0825	966	0.	442.2	1154.6
2	0050	299	0.	436.8	1154.3	*	3	0440	633	0.	442.3	1154.6	*	4	0830	967	0.	442.2	1154.6
2	0055	300	0.	437.5	1154.4	*	3	0445	634	0.	442.3	1154.6	*	4	0835	968	0.	442.2	1154.6
2	0100	301	0.	438.2	1154.4	*	3	0450	635	0.	442.3	1154.6	*	4	0840	969	0.	442.2	1154.6
2	0105	302	0.	438.9	1154.4	*	3	0455	636	0.	442.3	1154.6	*	4	0845	970	0.	442.2	1154.6
2	0110	303	0.	439.5	1154.5	*	3	0500	637	0.	442.3	1154.6	*	4	0850	971	0.	442.2	1154.6
2	0115	304	0.	440.0	1154.5	*	3	0505	638	0.	442.3	1154.6	*	4	0855	972	0.	442.2	1154.6

```
  2     0120 305      0.    440.5  1154.5 *  3     0510 639      0.    442.3  1154.6 *  4     0900 973      0.    442.2  1154.6
  2     0125 306      0.    441.0  1154.5 *  3     0515 640      0.    442.3  1154.6 *  4     0905 974      0.    442.2  1154.6
  2     0130 307      0.    441.4  1154.6 *  3     0520 641      0.    442.3  1154.6 *  4     0910 975      0.    442.2  1154.6
  2     0135 308      0.    441.7  1154.6 *  3     0525 642      0.    442.3  1154.6 *  4     0915 976      0.    442.2  1154.6
  2     0140 309      0.    442.0  1154.6 *  3     0530 643      0.    442.3  1154.6 *  4     0920 977      0.    442.2  1154.6
  2     0145 310      0.    442.2  1154.6 *  3     0535 644      0.    442.3  1154.6 *  4     0925 978      0.    442.2  1154.6
  2     0150 311      0.    442.3  1154.6 *  3     0540 645      0.    442.3  1154.6 *  4     0930 979      0.    442.2  1154.6
  2     0155 312      0.    442.3  1154.6 *  3     0545 646      0.    442.3  1154.6 *  4     0935 980      0.    442.2  1154.6
  2     0200 313      0.    442.3  1154.6 *  3     0550 647      0.    442.3  1154.6 *  4     0940 981      0.    442.2  1154.6
  2     0205 314      0.    442.3  1154.6 *  3     0555 648      0.    442.3  1154.6 *  4     0945 982      0.    442.2  1154.6
  2     0210 315      0.    442.3  1154.6 *  3     0600 649      0.    442.3  1154.6 *  4     0950 983      0.    442.2  1154.6
  2     0215 316      0.    442.3  1154.6 *  3     0605 650      0.    442.3  1154.6 *  4     0955 984      0.    442.2  1154.6
  2     0220 317      0.    442.3  1154.6 *  3     0610 651      0.    442.3  1154.6 *  4     1000 985      0.    442.2  1154.6
  2     0225 318      0.    442.3  1154.6 *  3     0615 652      0.    442.3  1154.6 *  4     1005 986      0.    442.2  1154.6
  2     0230 319      0.    442.3  1154.6 *  3     0620 653      0.    442.3  1154.6 *  4     1010 987      0.    442.2  1154.6
  2     0235 320      0.    442.3  1154.6 *  3     0625 654      0.    442.3  1154.6 *  4     1015 988      0.    442.2  1154.6
  2     0240 321      0.    442.3  1154.6 *  3     0630 655      0.    442.3  1154.6 *  4     1020 989      0.    442.2  1154.6
  2     0245 322      0.    442.3  1154.6 *  3     0635 656      0.    442.3  1154.6 *  4     1025 990      0.    442.2  1154.6
  2     0250 323      0.    442.3  1154.6 *  3     0640 657      0.    442.3  1154.6 *  4     1030 991      0.    442.2  1154.6
  2     0255 324      0.    442.3  1154.6 *  3     0645 658      0.    442.3  1154.6 *  4     1035 992      0.    442.2  1154.6
  2     0300 325      0.    442.3  1154.6 *  3     0650 659      0.    442.3  1154.6 *  4     1040 993      0.    442.2  1154.6
  2     0305 326      0.    442.3  1154.6 *  3     0655 660      0.    442.3  1154.6 *  4     1045 994      0.    442.2  1154.6
  2     0310 327      0.    442.3  1154.6 *  3     0700 661      0.    442.3  1154.6 *  4     1050 995      0.    442.2  1154.6
  2     0315 328      0.    442.3  1154.6 *  3     0705 662      0.    442.3  1154.6 *  4     1055 996      0.    442.2  1154.6
  2     0320 329      0.    442.3  1154.6 *  3     0710 663      0.    442.3  1154.6 *  4     1100 997      0.    442.2  1154.6
  2     0325 330      0.    442.3  1154.6 *  3     0715 664      0.    442.3  1154.6 *  4     1105 998      0.    442.2  1154.6
  2     0330 331      0.    442.3  1154.6 *  3     0720 665      0.    442.3  1154.6 *  4     1110 999      0.    442.2  1154.6
  2     0335 332      0.    442.3  1154.6 *  3     0725 666      0.    442.3  1154.6 *  4     11151000      0.    442.2  1154.6
  2     0340 333      0.    442.3  1154.6 *  3     0730 667      0.    442.3  1154.6 *
  2     0345 334      0.    442.3  1154.6 *  3     0735 668      0.    442.3  1154.6 *
                                           *                                           *
*****************************************************************************************************************************

 PEAK FLOW     TIME                          MAXIMUM AVERAGE FLOW
                                     6-HR        24-HR        72-HR      83.25-HR
+  (CFS)       (HR)
                          (CFS)
+      0.      23.00                 0.           0.           0.           0.
                        (INCHES)   0.000        0.000        0.000        0.000
                         (AC-FT)     0.           0.           0.           0.

 PEAK STORAGE  TIME                          MAXIMUM AVERAGE STORAGE
                                     6-HR        24-HR        72-HR      83.25-HR
+  (AC-FT)     (HR)
     442.     25.83                  442.         442.         414.         358.

 PEAK STAGE    TIME                          MAXIMUM AVERAGE STAGE
                                     6-HR        24-HR        72-HR      83.25-HR
+  (FEET)      (HR)
   1154.61    25.83               1154.62      1154.63      1153.07      1149.95

                        CUMULATIVE AREA =   29.79 SQ MI

*** *** *** *** *** *** *** *** *** *** *** *** *** *** *** *** *** *** *** *** *** *** *** *** *** *** *** *** *** *** *** *** ***

            **************
            *            *
 703 KK     *    RRCB    *
            *            *
            **************

 705 KO          OUTPUT CONTROL VARIABLES
                      IPRNT          2  PRINT CONTROL
```

Psuedo Peak

```
                    IPLOT          0  PLOT CONTROL
                    QSCAL         0.  HYDROGRAPH PLOT SCALE

706 DR          RETRIEVE DIVERSION HYDROGRAPH
                    ISTAD        RCB  DIVERSION HYDROGRAPH IDENTIFICATION
                                                        ***
```

****

HYDROGRAPH AT STATION RRCB

****

DA	MON	HRMN	ORD	FLOW	DA	MON	HRMN	ORD	FLOW	DA	MON	HRMN	ORD	FLOW	DA	MON	HRMN	ORD	FLOW
1		0000	1	0.	1		2050	251	672.	2		1740	501	225.	3		1430	751	46.
1		0005	2	0.	1		2055	252	672.	2		1745	502	224.	3		1435	752	46.
1		0010	3	0.	1		2100	253	672.	2		1750	503	216.	3		1440	753	46.
1		0015	4	0.	1		2105	254	672.	2		1755	504	194.	3		1445	754	46.
1		0020	5	0.	1		2110	255	672.	2		1800	505	159.	3		1450	755	46.
1		0025	6	0.	1		2115	256	672.	2		1805	506	125.	3		1455	756	46.
1		0030	7	0.	1		2120	257	672.	2		1810	507	107.	3		1500	757	46.
1		0035	8	0.	1		2125	258	672.	2		1815	508	126.	3		1505	758	46.
1		0040	9	0.	1		2130	259	672.	2		1820	509	174.	3		1510	759	46.
1		0045	10	0.	1		2135	260	672.	2		1825	510	207.	3		1515	760	46.
1		0050	11	0.	1		2140	261	672.	2		1830	511	219.	3		1520	761	46.
1		0055	12	0.	1		2145	262	670.	2		1835	512	222.	3		1525	762	46.
1		0100	13	0.	1		2150	263	663.	2		1840	513	223.	3		1530	763	46.
1		0105	14	0.	1		2155	264	647.	2		1845	514	223.	3		1535	764	46.
1		0110	15	0.	1		2200	265	631.	2		1850	515	223.	3		1540	765	46.
1		0115	16	0.	1		2205	266	624.	2		1855	516	223.	3		1545	766	46.
1		0120	17	0.	1		2210	267	633.	2		1900	517	223.	3		1550	767	46.
1		0125	18	0.	1		2215	268	662.	2		1905	518	223.	3		1555	768	46.
1		0130	19	0.	1		2220	269	671.	2		1910	519	223.	3		1600	769	46.
1		0135	20	0.	1		2225	270	673.	2		1915	520	222.	3		1605	770	46.
1		0140	21	0.	1		2230	271	674.	2		1920	521	222.	3		1610	771	46.
1		0145	22	0.	1		2235	272	673.	2		1925	522	222.	3		1615	772	46.
1		0150	23	0.	1		2240	273	672.	2		1930	523	222.	3		1620	773	46.
1		0155	24	0.	1		2245	274	672.	2		1935	524	222.	3		1625	774	46.
1		0200	25	0.	1		2250	275	671.	2		1940	525	222.	3		1630	775	46.
1		0205	26	0.	1		2255	276	671.	2		1945	526	220.	3		1635	776	46.
1		0210	27	0.	1		2300	277	671.	2		1950	527	213.	3		1640	777	46.
1		0215	28	0.	1		2305	278	671.	2		1955	528	191.	3		1645	778	46.
1		0220	29	0.	1		2310	279	671.	2		2000	529	157.	3		1650	779	46.
1		0225	30	0.	1		2315	280	671.	2		2005	530	123.	3		1655	780	46.
1		0230	31	0.	1		2320	281	670.	2		2010	531	104.	3		1700	781	46.
1		0235	32	0.	1		2325	282	670.	2		2015	532	121.	3		1705	782	46.
1		0240	33	0.	1		2330	283	670.	2		2020	533	168.	3		1710	783	46.
1		0245	34	0.	1		2335	284	670.	2		2025	534	204.	3		1715	784	46.
1		0250	35	0.	1		2340	285	670.	2		2030	535	216.	3		1720	785	46.
1		0255	36	0.	1		2345	286	669.	2		2035	536	219.	3		1725	786	46.
1		0300	37	0.	1		2350	287	662.	2		2040	537	220.	3		1730	787	46.
1		0305	38	0.	1		2355	288	643.	2		2045	538	220.	3		1735	788	46.
1		0310	39	0.	2		0000	289	626.	2		2050	539	220.	3		1740	789	46.
1		0315	40	0.	2		0005	290	614.	2		2055	540	220.	3		1745	790	46.
1		0320	41	0.	2		0010	291	617.	2		2100	541	220.	3		1750	791	46.
1		0325	42	0.	2		0015	292	637.	2		2105	542	220.	3		1755	792	46.
1		0330	43	0.	2		0020	293	666.	2		2110	543	220.	3		1800	793	46.
1		0335	44	0.	2		0025	294	666.	2		2115	544	220.	3		1805	794	46.
1		0340	45	0.	2		0030	295	666.	2		2120	545	220.	3		1810	795	46.
1		0345	46	0.	2		0035	296	665.	2		2125	546	220.	3		1815	796	46.
1		0350	47	0.	2		0040	297	664.	2		2130	547	220.	3		1820	797	46.
1		0355	48	0.	2		0045	298	663.	2		2135	548	220.	3		1825	798	46.
1		0400	49	0.	2		0050	299	662.	2		2140	549	219.	3		1830	799	46.
1		0405	50	0.	2		0055	300	661.	2		2145	550	218.	3		1835	800	46.
1		0410	51	0.	2		0100	301	660.	2		2150	551	210.	3		1840	801	46.

1	0415	52	0.	*	2	0105	302	659.	*	2	2155	552	189.	*	3	1845	802	46.
1	0420	53	0.	*	2	0110	303	658.	*	2	2200	553	155.	*	3	1850	803	46.
1	0425	54	0.	*	2	0115	304	656.	*	2	2205	554	121.	*	3	1855	804	46.
1	0430	55	0.	*	2	0120	305	654.	*	2	2210	555	101.	*	3	1900	805	46.
1	0435	56	0.	*	2	0125	306	652.	*	2	2215	556	120.	*	3	1905	806	46.
1	0440	57	0.	*	2	0130	307	650.	*	2	2220	557	168.	*	3	1910	807	46.
1	0445	58	0.	*	2	0135	308	648.	*	2	2225	558	202.	*	3	1915	808	46.
1	0450	59	0.	*	2	0140	309	646.	*	2	2230	559	214.	*	3	1920	809	46.
1	0455	60	0.	*	2	0145	310	641.	*	2	2235	560	217.	*	3	1925	810	46.
1	0500	61	0.	*	2	0150	311	631.	*	2	2240	561	218.	*	3	1930	811	46.
1	0505	62	0.	*	2	0155	312	613.	*	2	2245	562	218.	*	3	1935	812	46.
1	0510	63	0.	*	2	0200	313	584.	*	2	2250	563	218.	*	3	1940	813	46.
1	0515	64	0.	*	2	0205	314	554.	*	2	2255	564	218.	*	3	1945	814	46.
1	0520	65	0.	*	2	0210	315	539.	*	2	2300	565	218.	*	3	1950	815	46.
1	0525	66	0.	*	2	0215	316	542.	*	2	2305	566	218.	*	3	1955	816	46.
1	0530	67	0.	*	2	0220	317	552.	*	2	2310	567	218.	*	3	2000	817	46.
1	0535	68	0.	*	2	0225	318	561.	*	2	2315	568	218.	*	3	2005	818	46.
1	0540	69	0.	*	2	0230	319	568.	*	2	2320	569	218.	*	3	2010	819	46.
1	0545	70	0.	*	2	0235	320	572.	*	2	2325	570	218.	*	3	2015	820	46.
1	0550	71	0.	*	2	0240	321	576.	*	2	2330	571	218.	*	3	2020	821	46.
1	0555	72	0.	*	2	0245	322	577.	*	2	2335	572	217.	*	3	2025	822	46.
1	0600	73	0.	*	2	0250	323	578.	*	2	2340	573	217.	*	3	2030	823	46.
1	0605	74	0.	*	2	0255	324	577.	*	2	2345	574	216.	*	3	2035	824	46.
1	0610	75	0.	*	2	0300	325	576.	*	2	2350	575	209.	*	3	2040	825	46.
1	0615	76	0.	*	2	0305	326	574.	*	2	2355	576	188.	*	3	2045	826	46.
1	0620	77	0.	*	2	0310	327	571.	*	3	0000	577	154.	*	3	2050	827	46.
1	0625	78	0.	*	2	0315	328	568.	*	3	0005	578	120.	*	3	2055	828	46.
1	0630	79	0.	*	2	0320	329	564.	*	3	0010	579	99.	*	3	2100	829	46.
1	0635	80	0.	*	2	0325	330	560.	*	3	0015	580	115.	*	3	2105	830	46.
1	0640	81	0.	*	2	0330	331	556.	*	3	0020	581	162.	*	3	2110	831	46.
1	0645	82	0.	*	2	0335	332	551.	*	3	0025	582	198.	*	3	2115	832	46.
1	0650	83	0.	*	2	0340	333	546.	*	3	0030	583	211.	*	3	2120	833	46.
1	0655	84	0.	*	2	0345	334	540.	*	3	0035	584	214.	*	3	2125	834	46.
1	0700	85	0.	*	2	0350	335	529.	*	3	0040	585	215.	*	3	2130	835	46.
1	0705	86	0.	*	2	0355	336	507.	*	3	0045	586	215.	*	3	2135	836	46.
1	0710	87	0.	*	2	0400	337	420.	*	3	0050	587	215.	*	3	2140	837	46.
1	0715	88	0.	*	2	0405	338	339.	*	3	0055	588	215.	*	3	2145	838	46.
1	0720	89	0.	*	2	0410	339	324.	*	3	0100	589	211.	*	3	2150	839	46.
1	0725	90	0.	*	2	0415	340	367.	*	3	0105	590	199.	*	3	2155	840	46.
1	0730	91	0.	*	2	0420	341	416.	*	3	0110	591	175.	*	3	2200	841	46.
1	0735	92	0.	*	2	0425	342	444.	*	3	0115	592	144.	*	3	2205	842	46.
1	0740	93	0.	*	2	0430	343	455.	*	3	0120	593	114.	*	3	2210	843	46.
1	0745	94	0.	*	2	0435	344	458.	*	3	0125	594	90.	*	3	2215	844	46.
1	0750	95	0.	*	2	0440	345	457.	*	3	0130	595	73.	*	3	2220	845	46.
1	0755	96	0.	*	2	0445	346	454.	*	3	0135	596	65.	*	3	2225	846	46.
1	0800	97	0.	*	2	0450	347	450.	*	3	0140	597	61.	*	3	2230	847	46.
1	0805	98	0.	*	2	0455	348	445.	*	3	0145	598	60.	*	3	2235	848	46.
1	0810	99	0.	*	2	0500	349	441.	*	3	0150	599	59.	*	3	2240	849	46.
1	0815	100	0.	*	2	0505	350	437.	*	3	0155	600	58.	*	3	2245	850	46.
1	0820	101	0.	*	2	0510	351	432.	*	3	0200	601	55.	*	3	2250	851	46.
1	0825	102	0.	*	2	0515	352	428.	*	3	0205	602	48.	*	3	2255	852	46.
1	0830	103	0.	*	2	0520	353	424.	*	3	0210	603	40.	*	3	2300	853	46.
1	0835	104	0.	*	2	0525	354	419.	*	3	0215	604	32.	*	3	2305	854	46.
1	0840	105	0.	*	2	0530	355	415.	*	3	0220	605	31.	*	3	2310	855	46.
1	0845	106	0.	*	2	0535	356	411.	*	3	0225	606	38.	*	3	2315	856	46.
1	0850	107	0.	*	2	0540	357	407.	*	3	0230	607	48.	*	3	2320	857	46.
1	0855	108	0.	*	2	0545	358	399.	*	3	0235	608	54.	*	3	2325	858	46.
1	0900	109	0.	*	2	0550	359	380.	*	3	0240	609	57.	*	3	2330	859	46.
1	0905	110	0.	*	2	0555	360	341.	*	3	0245	610	57.	*	3	2335	860	46.
1	0910	111	0.	*	2	0600	361	283.	*	3	0250	611	58.	*	3	2340	861	46.
1	0915	112	0.	*	2	0605	362	220.	*	3	0255	612	58.	*	3	2345	862	46.
1	0920	113	0.	*	2	0610	363	220.	*	3	0300	613	57.	*	3	2350	863	46.
1	0925	114	0.	*	2	0615	364	278.	*	3	0305	614	57.	*	3	2355	864	46.
1	0930	115	0.	*	2	0620	365	325.	*	3	0310	615	57.	*	4	0000	865	46.
1	0935	116	0.	*	2	0625	366	347.	*	3	0315	616	57.	*	4	0005	866	46.
1	0940	117	0.	*	2	0630	367	357.	*	3	0320	617	57.	*	4	0010	867	46.
1	0945	118	0.	*	2	0635	368	359.	*	3	0325	618	57.	*	4	0015	868	46.

1	0950	119	0.	*	2	0640	369	359.	*	3	0330	619	57.	*	4	0020	869	46.
1	0955	120	0.	*	2	0645	370	357.	*	3	0335	620	57.	*	4	0025	870	46.
1	1000	121	0.	*	2	0650	371	355.	*	3	0340	621	57.	*	4	0030	871	46.
1	1005	122	0.	*	2	0655	372	352.	*	3	0345	622	56.	*	4	0035	872	46.
1	1010	123	0.	*	2	0700	373	348.	*	3	0350	623	56.	*	4	0040	873	46.
1	1015	124	0.	*	2	0705	374	345.	*	3	0355	624	55.	*	4	0045	874	46.
1	1020	125	0.	*	2	0710	375	342.	*	3	0400	625	52.	*	4	0050	875	46.
1	1025	126	0.	*	2	0715	376	339.	*	3	0405	626	46.	*	4	0055	876	46.
1	1030	127	0.	*	2	0720	377	336.	*	3	0410	627	38.	*	4	0100	877	46.
1	1035	128	0.	*	2	0725	378	333.	*	3	0415	628	31.	*	4	0105	878	46.
1	1040	129	0.	*	2	0730	379	330.	*	3	0420	629	29.	*	4	0110	879	46.
1	1045	130	0.	*	2	0735	380	327.	*	3	0425	630	36.	*	4	0115	880	46.
1	1050	131	0.	*	2	0740	381	324.	*	3	0430	631	47.	*	4	0120	881	46.
1	1055	132	0.	*	2	0745	382	320.	*	3	0435	632	52.	*	4	0125	882	46.
1	1100	133	0.	*	2	0750	383	307.	*	3	0440	633	54.	*	4	0130	883	46.
1	1105	134	0.	*	2	0755	384	269.	*	3	0445	634	55.	*	4	0135	884	46.
1	1110	135	0.	*	2	0800	385	218.	*	3	0450	635	55.	*	4	0140	885	46.
1	1115	136	0.	*	2	0805	386	174.	*	3	0455	636	55.	*	4	0145	886	46.
1	1120	137	0.	*	2	0810	387	167.	*	3	0500	637	55.	*	4	0150	887	46.
1	1125	138	0.	*	2	0815	388	211.	*	3	0505	638	55.	*	4	0155	888	46.
1	1130	139	0.	*	2	0820	389	265.	*	3	0510	639	55.	*	4	0200	889	46.
1	1135	140	0.	*	2	0825	390	291.	*	3	0515	640	55.	*	4	0205	890	46.
1	1140	141	0.	*	2	0830	391	299.	*	3	0520	641	55.	*	4	0210	891	46.
1	1145	142	0.	*	2	0835	392	300.	*	3	0525	642	54.	*	4	0215	892	46.
1	1150	143	0.	*	2	0840	393	300.	*	3	0530	643	54.	*	4	0220	893	46.
1	1155	144	0.	*	2	0845	394	299.	*	3	0535	644	54.	*	4	0225	894	46.
1	1200	145	0.	*	2	0850	395	297.	*	3	0540	645	54.	*	4	0230	895	46.
1	1205	146	0.	*	2	0855	396	296.	*	3	0545	646	54.	*	4	0235	896	46.
1	1210	147	0.	*	2	0900	397	295.	*	3	0550	647	54.	*	4	0240	897	46.
1	1215	148	0.	*	2	0905	398	294.	*	3	0555	648	53.	*	4	0245	898	46.
1	1220	149	0.	*	2	0910	399	292.	*	3	0600	649	50.	*	4	0250	899	46.
1	1225	150	0.	*	2	0915	400	291.	*	3	0605	650	44.	*	4	0255	900	46.
1	1230	151	0.	*	2	0920	401	290.	*	3	0610	651	37.	*	4	0300	901	46.
1	1235	152	0.	*	2	0925	402	289.	*	3	0615	652	30.	*	4	0305	902	46.
1	1240	153	0.	*	2	0930	403	288.	*	3	0620	653	28.	*	4	0310	903	46.
1	1245	154	530.	*	2	0935	404	286.	*	3	0625	654	33.	*	4	0315	904	46.
1	1250	155	634.	*	2	0940	405	285.	*	3	0630	655	43.	*	4	0320	905	46.
1	1255	156	729.	*	2	0945	406	281.	*	3	0635	656	49.	*	4	0325	906	46.
1	1300	157	754.	*	2	0950	407	268.	*	3	0640	657	52.	*	4	0330	907	46.
1	1305	158	766.	*	2	0955	408	238.	*	3	0645	658	52.	*	4	0335	908	46.
1	1310	159	776.	*	2	1000	409	195.	*	3	0650	659	53.	*	4	0340	909	46.
1	1315	160	784.	*	2	1005	410	154.	*	3	0655	660	53.	*	4	0345	910	46.
1	1320	161	792.	*	2	1010	411	143.	*	3	0700	661	53.	*	4	0350	911	46.
1	1325	162	798.	*	2	1015	412	181.	*	3	0705	662	52.	*	4	0355	912	46.
1	1330	163	802.	*	2	1020	413	233.	*	3	0710	663	52.	*	4	0400	913	46.
1	1335	164	804.	*	2	1025	414	261.	*	3	0715	664	52.	*	4	0405	914	46.
1	1340	165	802.	*	2	1030	415	269.	*	3	0720	665	52.	*	4	0410	915	46.
1	1345	166	796.	*	2	1035	416	271.	*	3	0725	666	52.	*	4	0415	916	46.
1	1350	167	785.	*	2	1040	417	271.	*	3	0730	667	52.	*	4	0420	917	46.
1	1355	168	770.	*	2	1045	418	270.	*	3	0735	668	52.	*	4	0425	918	46.
1	1400	169	759.	*	2	1050	419	269.	*	3	0740	669	52.	*	4	0430	919	46.
1	1405	170	758.	*	2	1055	420	268.	*	3	0745	670	52.	*	4	0435	920	46.
1	1410	171	764.	*	2	1100	421	267.	*	3	0750	671	52.	*	4	0440	921	46.
1	1415	172	767.	*	2	1105	422	266.	*	3	0755	672	51.	*	4	0445	922	46.
1	1420	173	765.	*	2	1110	423	265.	*	3	0800	673	49.	*	4	0450	923	46.
1	1425	174	761.	*	2	1115	424	263.	*	3	0805	674	44.	*	4	0455	924	46.
1	1430	175	759.	*	2	1120	425	262.	*	3	0810	675	36.	*	4	0500	925	46.
1	1435	176	757.	*	2	1125	426	261.	*	3	0815	676	29.	*	4	0505	926	46.
1	1440	177	757.	*	2	1130	427	260.	*	3	0820	677	25.	*	4	0510	927	46.
1	1445	178	755.	*	2	1135	428	259.	*	3	0825	678	32.	*	4	0515	928	46.
1	1450	179	752.	*	2	1140	429	258.	*	3	0830	679	43.	*	4	0520	929	46.
1	1455	180	748.	*	2	1145	430	256.	*	3	0835	680	48.	*	4	0525	930	46.
1	1500	181	744.	*	2	1150	431	245.	*	3	0840	681	50.	*	4	0530	931	46.
1	1505	182	741.	*	2	1155	432	218.	*	3	0845	682	50.	*	4	0535	932	46.
1	1510	183	737.	*	2	1200	433	179.	*	3	0850	683	50.	*	4	0540	933	46.
1	1515	184	734.	*	2	1205	434	140.	*	3	0855	684	50.	*	4	0545	934	46.
1	1520	185	731.	*	2	1210	435	126.	*	3	0900	685	50.	*	4	0550	935	46.

1	1525	186	728.	*	2	1215	436	157.	*	3	0905	686	50.	*	4	0555	936	46.
1	1530	187	726.	*	2	1220	437	208.	*	3	0910	687	50.	*	4	0600	937	46.
1	1535	188	724.	*	2	1225	438	235.	*	3	0915	688	50.	*	4	0605	938	46.
1	1540	189	721.	*	2	1230	439	244.	*	3	0920	689	50.	*	4	0610	939	46.
1	1545	190	716.	*	2	1235	440	246.	*	3	0925	690	50.	*	4	0615	940	46.
1	1550	191	710.	*	2	1240	441	246.	*	3	0930	691	50.	*	4	0620	941	46.
1	1555	192	700.	*	2	1245	442	246.	*	3	0935	692	50.	*	4	0625	942	46.
1	1600	193	691.	*	2	1250	443	245.	*	3	0940	693	50.	*	4	0630	943	46.
1	1605	194	689.	*	2	1255	444	244.	*	3	0945	694	49.	*	4	0635	944	46.
1	1610	195	695.	*	2	1300	445	243.	*	3	0950	695	49.	*	4	0640	945	46.
1	1615	196	701.	*	2	1305	446	242.	*	3	0955	696	49.	*	4	0645	946	46.
1	1620	197	701.	*	2	1310	447	241.	*	3	1000	697	47.	*	4	0650	947	46.
1	1625	198	698.	*	2	1315	448	241.	*	3	1005	698	41.	*	4	0655	948	46.
1	1630	199	696.	*	2	1320	449	240.	*	3	1010	699	34.	*	4	0700	949	46.
1	1635	200	694.	*	2	1325	450	239.	*	3	1015	700	28.	*	4	0705	950	46.
1	1640	201	692.	*	2	1330	451	238.	*	3	1020	701	24.	*	4	0710	951	46.
1	1645	202	690.	*	2	1335	452	237.	*	3	1025	702	28.	*	4	0715	952	46.
1	1650	203	688.	*	2	1340	453	237.	*	3	1030	703	37.	*	4	0720	953	46.
1	1655	204	687.	*	2	1345	454	235.	*	3	1035	704	44.	*	4	0725	954	46.
1	1700	205	686.	*	2	1350	455	226.	*	3	1040	705	47.	*	4	0730	955	46.
1	1705	206	684.	*	2	1355	456	202.	*	3	1045	706	47.	*	4	0735	956	46.
1	1710	207	682.	*	2	1400	457	167.	*	3	1050	707	48.	*	4	0740	957	46.
1	1715	208	679.	*	2	1405	458	131.	*	3	1055	708	48.	*	4	0745	958	46.
1	1720	209	677.	*	2	1410	459	115.	*	3	1100	709	48.	*	4	0750	959	46.
1	1725	210	675.	*	2	1415	460	138.	*	3	1105	710	47.	*	4	0755	960	46.
1	1730	211	673.	*	2	1420	461	188.	*	3	1110	711	47.	*	4	0800	961	46.
1	1735	212	671.	*	2	1425	462	218.	*	3	1115	712	47.	*	4	0805	962	46.
1	1740	213	670.	*	2	1430	463	228.	*	3	1120	713	47.	*	4	0810	963	46.
1	1745	214	670.	*	2	1435	464	231.	*	3	1125	714	47.	*	4	0815	964	46.
1	1750	215	666.	*	2	1440	465	232.	*	3	1130	715	47.	*	4	0820	965	46.
1	1755	216	657.	*	2	1445	466	232.	*	3	1135	716	47.	*	4	0825	966	46.
1	1800	217	641.	*	2	1450	467	232.	*	3	1140	717	47.	*	4	0830	967	46.
1	1805	218	638.	*	2	1455	468	232.	*	3	1145	718	47.	*	4	0835	968	46.
1	1810	219	653.	*	2	1500	469	231.	*	3	1150	719	46.	*	4	0840	969	46.
1	1815	220	666.	*	2	1505	470	231.	*	3	1155	720	46.	*	4	0845	970	46.
1	1820	221	671.	*	2	1510	471	231.	*	3	1200	721	46.	*	4	0850	971	46.
1	1825	222	671.	*	2	1515	472	231.	*	3	1205	722	46.	*	4	0855	972	46.
1	1830	223	671.	*	2	1520	473	230.	*	3	1210	723	46.	*	4	0900	973	46.
1	1835	224	671.	*	2	1525	474	230.	*	3	1215	724	46.	*	4	0905	974	46.
1	1840	225	670.	*	2	1530	475	230.	*	3	1220	725	46.	*	4	0910	975	46.
1	1845	226	670.	*	2	1535	476	230.	*	3	1225	726	46.	*	4	0915	976	46.
1	1850	227	670.	*	2	1540	477	229.	*	3	1230	727	46.	*	4	0920	977	46.
1	1855	228	671.	*	2	1545	478	228.	*	3	1235	728	46.	*	4	0925	978	46.
1	1900	229	671.	*	2	1550	479	220.	*	3	1240	729	46.	*	4	0930	979	46.
1	1905	230	671.	*	2	1555	480	197.	*	3	1245	730	46.	*	4	0935	980	46.
1	1910	231	671.	*	2	1600	481	162.	*	3	1250	731	46.	*	4	0940	981	46.
1	1915	232	672.	*	2	1605	482	127.	*	3	1255	732	46.	*	4	0945	982	46.
1	1920	233	673.	*	2	1610	483	110.	*	3	1300	733	46.	*	4	0950	983	46.
1	1925	234	673.	*	2	1615	484	129.	*	3	1305	734	46.	*	4	0955	984	46.
1	1930	235	672.	*	2	1620	485	178.	*	3	1310	735	46.	*	4	1000	985	46.
1	1935	236	671.	*	2	1625	486	211.	*	3	1315	736	46.	*	4	1005	986	46.
1	1940	237	671.	*	2	1630	487	223.	*	3	1320	737	46.	*	4	1010	987	46.
1	1945	238	669.	*	2	1635	488	226.	*	3	1325	738	46.	*	4	1015	988	46.
1	1950	239	663.	*	2	1640	489	227.	*	3	1330	739	46.	*	4	1020	989	46.
1	1955	240	648.	*	2	1645	490	227.	*	3	1335	740	46.	*	4	1025	990	46.
1	2000	241	633.	*	2	1650	491	227.	*	3	1340	741	46.	*	4	1030	991	46.
1	2005	242	628.	*	2	1655	492	227.	*	3	1345	742	46.	*	4	1035	992	46.
1	2010	243	637.	*	2	1700	493	226.	*	3	1350	743	46.	*	4	1040	993	46.
1	2015	244	664.	*	2	1705	494	226.	*	3	1355	744	46.	*	4	1045	994	46.
1	2020	245	670.	*	2	1710	495	226.	*	3	1400	745	46.	*	4	1050	995	46.
1	2025	246	671.	*	2	1715	496	226.	*	3	1405	746	46.	*	4	1055	996	46.
1	2030	247	671.	*	2	1720	497	226.	*	3	1410	747	46.	*	4	1100	997	46.
1	2035	248	671.	*	2	1725	498	226.	*	3	1415	748	46.	*	4	1105	998	46.
1	2040	249	671.	*	2	1730	499	225.	*	3	1420	749	46.	*	4	1110	999	46.
1	2045	250	672.	*	2	1735	500	225.	*	3	1425	750	46.	*	4	1115	1000	46.
				*					*					*				

****

```
  PEAK FLOW     TIME                          MAXIMUM AVERAGE FLOW
                                     6-HR       24-HR       72-HR     83.25-HR
+   (CFS)       (HR)
                           (CFS)
+     804.     13.58                 718.        535.        236.        204.
                        (INCHES)    0.224       0.668       0.885       0.885
                         (AC-FT)    356.        1062.       1407.       1407.

                        CUMULATIVE AREA =    0.00 SQ MI


*** *** *** *** *** *** *** *** *** *** *** *** *** *** *** *** *** *** *** *** *** *** *** *** *** *** *** *** *** *** *** *** *** *** ***


            **************
            *            *
  707 KK    *   OUTFL    *
            *            *
            **************

  709 KO          OUTPUT CONTROL VARIABLES
                        IPRNT          3  PRINT CONTROL
                        IPLOT          0  PLOT CONTROL
                        QSCAL         0.  HYDROGRAPH PLOT SCALE

  710 HC          HYDROGRAPH COMBINATION
                        ICOMP          2  NUMBER OF HYDROGRAPHS TO COMBINE
                                                                  ***
MANE2 NPLAN,NSTM       1      0
      ***             ***            ***            ***            ***

                        HYDROGRAPH AT STATION   OUTFL

  PEAK FLOW     TIME                          MAXIMUM AVERAGE FLOW
                                     6-HR       24-HR       72-HR     83.25-HR
+   (CFS)       (HR)
                           (CFS)
+     804.     13.58                 718.        535.        236.        204.
                        (INCHES)    0.224       0.668       0.885       0.885
                         (AC-FT)    356.        1062.       1407.       1407.

                        CUMULATIVE AREA =   29.79 SQ MI

MANE2 NPLAN,NSTM       1      0
MANE2 NPLAN,NSTM       1      0
MANE2 NPLAN,NSTM       1      0
MANE2 NPLAN,NSTM       1      0
MANE2 NPLAN,NSTM       1      0
MANE2 NPLAN,NSTM       1      0
MANE2 NPLAN,NSTM       1      0
MANE2 NPLAN,NSTM       1      0
MANE2 NPLAN,NSTM       1      0
MANE2 NPLAN,NSTM       1      0
MANE2 NPLAN,NSTM       1      0
MANE2 NPLAN,NSTM       1      0
MANE2 NPLAN,NSTM       1      0
MANE2 NPLAN,NSTM       1      0
MANE2 NPLAN,NSTM       1      0
MANE2 NPLAN,NSTM       1      0
MANE2 NPLAN,NSTM       1      0
MANE2 NPLAN,NSTM       1      0
```

MANE2 NPLAN,NSTM	1	0
MANE2 NPLAN,NSTM	1	0
MANE2 NPLAN,NSTM	1	0
MANE2 NPLAN,NSTM	1	0
MANE2 NPLAN,NSTM	1	0
MANE2 NPLAN,NSTM	1	0
MANE2 NPLAN,NSTM	1	0
MANE2 NPLAN,NSTM	1	0
MANE2 NPLAN,NSTM	1	0
MANE2 NPLAN,NSTM	1	0
MANE2 NPLAN,NSTM	1	0
MANE2 NPLAN,NSTM	1	0
MANE2 NPLAN,NSTM	1	0
MANE2 NPLAN,NSTM	1	0
MANE2 NPLAN,NSTM	1	0
MANE2 NPLAN,NSTM	1	0
MANE2 NPLAN,NSTM	1	0
MANE2 NPLAN,NSTM	1	0
MANE2 NPLAN,NSTM	1	0
MANE2 NPLAN,NSTM	1	0
MANE2 NPLAN,NSTM	1	0
MANE2 NPLAN,NSTM	1	0
MANE2 NPLAN,NSTM	1	0
MANE2 NPLAN,NSTM	1	0
MANE2 NPLAN,NSTM	1	0
MANE2 NPLAN,NSTM	1	0
MANE2 NPLAN,NSTM	1	0
MANE2 NPLAN,NSTM	1	0
MANE2 NPLAN,NSTM	1	0
MANE2 NPLAN,NSTM	1	0
MANE2 NPLAN,NSTM	1	0
MANE2 NPLAN,NSTM	1	0
MANE2 NPLAN,NSTM	1	0
MANE2 NPLAN,NSTM	1	0
MANE2 NPLAN,NSTM	1	0
MANE2 NPLAN,NSTM	1	0
MANE2 NPLAN,NSTM	1	0
MANE2 NPLAN,NSTM	1	0
MANE2 NPLAN,NSTM	1	0
MANE2 NPLAN,NSTM	1	0
MANE2 NPLAN,NSTM	1	0
MANE2 NPLAN,NSTM	1	0
MANE2 NPLAN,NSTM	1	0
MANE2 NPLAN,NSTM	1	0
MANE2 NPLAN,NSTM	1	0
MANE2 NPLAN,NSTM	1	0
MANE2 NPLAN,NSTM	1	0
MANE2 NPLAN,NSTM	1	0
MANE2 NPLAN,NSTM	1	0
MANE2 NPLAN,NSTM	1	0
MANE2 NPLAN,NSTM	1	0
MANE2 NPLAN,NSTM	1	0
MANE2 NPLAN,NSTM	1	0
MANE2 NPLAN,NSTM	1	0
MANE2 NPLAN,NSTM	1	0
MANE2 NPLAN,NSTM	1	0
MANE2 NPLAN,NSTM	1	0
MANE2 NPLAN,NSTM	1	0
MANE2 NPLAN,NSTM	1	0
MANE2 NPLAN,NSTM	1	0
MANE2 NPLAN,NSTM	1	0
MANE2 NPLAN,NSTM	1	0
MANE2 NPLAN,NSTM	1	0
MANE2 NPLAN,NSTM	1	0
MANE2 NPLAN,NSTM	1	0
MANE2 NPLAN,NSTM	1	0
MANE2 NPLAN,NSTM	1	0

```
MANE2 NPLAN,NSTM       1      0
MANE2 NPLAN,NSTM       1      0
1
```

RUNOFF SUMMARY
FLOW IN CUBIC FEET PER SECOND
TIME IN HOURS, AREA IN SQUARE MILES

	OPERATION	STATION	PEAK FLOW	TIME OF PEAK	AVERAGE FLOW FOR MAXIMUM PERIOD 6-HOUR	24-HOUR	72-HOUR	BASIN AREA	MAXIMUM STAGE	TIME OF MAX STAGE
+	HYDROGRAPH AT	bash	764.	13.58	327.	255.	126.	6.76		
+	HYDROGRAPH AT	CHNDLR	100.	13.00	90.	90.	45.	0.00		
+	2 COMBINED AT	cchand	864.	13.58	417.	344.	171.	6.76		
+	HYDROGRAPH AT	interc	200.	12.17	38.	10.	3.	0.16		
+	2 COMBINED AT	addTI	904.	13.58	428.	350.	174.	6.92		
+	HYDROGRAPH AT	basg	954.	14.00	337.	109.	36.	4.37		
+	ROUTED TO	rbasg	190.	16.83	180.	105.	36.	4.37		
+									1180.46	16.83
+	ROUTED TO	rtbasg	190.	16.92	180.	105.	36.	4.37		
+	2 COMBINED AT	cinter	938.	13.58	569.	454.	211.	11.29		
+	HYDROGRAPH AT	MCSWL2	48.	13.17	15.	4.	1.	0.16		
+	2 COMBINED AT	cbash	975.	13.58	581.	459.	212.	11.45		
+	ROUTED TO	RT1	969.	13.58	581.	458.	212.	11.45		
+	HYDROGRAPH AT	MCSWL3	52.	13.17	17.	5.	2.	0.17		
+	2 COMBINED AT	COMB1	1011.	13.58	595.	463.	214.	11.62		
+	HYDROGRAPH AT	SECT25	222.	13.25	77.	24.	8.	1.00		
+	ROUTED TO	RT1	222.	13.50	77.	24.	8.	1.00		
+	HYDROGRAPH AT	SECT36	92.	13.33	34.	11.	4.	0.51		
+	3 COMBINED AT	SECT36	1315.	13.58	704.	498.	225.	13.13		
	HYDROGRAPH AT									

+		mcclin	200.	12.08	29.	8.	3.	0.11
+	2 COMBINED AT	cmcln	1332.	13.50	711.	504.	228.	13.24
+	ROUTED TO	RT2536	1319.	13.58	711.	504.	228.	13.24
+	HYDROGRAPH AT	RUSWL1	5.	14.75	4.	1.	0.	0.21
+	ROUTED TO	RT1	5.	14.83	4.	1.	0.	0.21
+	HYDROGRAPH AT	RUSWL2	2.	14.33	1.	0.	0.	0.09
+	ROUTED TO	RT2	2.	14.58	1.	0.	0.	0.09
+	HYDROGRAPH AT	RUSWL3	42.	12.83	10.	3.	1.	0.10
+	4 COMBINED AT	COMB1	1338.	13.58	722.	509.	229.	13.64
+	ROUTED TO	RT3	1334.	13.58	722.	509.	229.	13.64
+	HYDROGRAPH AT	RUSWL4	3.	14.33	2.	1.	0.	0.16
+	HYDROGRAPH AT	RUSWL5	74.	12.50	12.	4.	1.	0.09
+	ROUTED TO	RT4	73.	12.58	12.	4.	1.	0.09
+	HYDROGRAPH AT	RUSWL6	3.	14.00	2.	1.	0.	0.15
+	3 COMBINED AT	COMB2	73.	12.58	16.	5.	2.	0.40
+	ROUTED TO	RT5	72.	12.67	16.	5.	2.	0.40
+	HYDROGRAPH AT	RUSWL7	2.	14.00	2.	1.	0.	0.13
+	HYDROGRAPH AT	RUSWL8	32.	12.33	4.	1.	0.	0.06
+	HYDROGRAPH AT	RUSWL9	64.	12.42	10.	3.	1.	0.10
+	5 COMBINED AT	SW34	1365.	13.58	748.	519.	233.	14.33
+	ROUTED TO	RT35	1345.	13.67	748.	519.	233.	14.33
+	HYDROGRAPH AT	SECT9	94.	12.75	22.	7.	2.	0.33
+	HYDROGRAPH AT	SECT10	9.	13.17	3.	1.	0.	0.03

+	HYDROGRAPH AT	SECT10	37.	12.92	11.	4.	1.	0.19
+	ROUTED TO	RT1	37.	13.08	11.	4.	1.	0.19
+	3 COMBINED AT	COMB1	122.	12.83	35.	11.	4.	0.55
+	ROUTED TO	RT2	121.	13.42	35.	11.	4.	0.55
+	HYDROGRAPH AT	SECT16	69.	12.67	13.	4.	1.	0.14
+	HYDROGRAPH AT	SECT15	94.	13.25	31.	9.	3.	0.31
+	3 COMBINED AT	COMB2	231.	13.42	78.	24.	8.	1.00
+	ROUTED TO	RT3	229.	13.67	77.	24.	8.	1.00
+	HYDROGRAPH AT	SECT21	186.	12.83	44.	13.	4.	0.42
+	HYDROGRAPH AT	SECT22	143.	12.75	37.	12.	4.	0.82
+	3 COMBINED AT	COMB3	421.	12.92	157.	49.	16.	2.24
+	ROUTED TO	RT4	417.	13.08	156.	49.	16.	2.24
+	HYDROGRAPH AT	SECT12	6.	15.08	5.	2.	1.	0.50
+	ROUTED TO	RT5	6.	15.58	4.	2.	1.	0.50
+	HYDROGRAPH AT	SECT11	51.	13.25	21.	7.	2.	0.51
+	2 COMBINED AT	COMB4	51.	13.25	24.	9.	3.	1.01
+	ROUTED TO	RT6	51.	13.50	24.	9.	3.	1.01
+	HYDROGRAPH AT	SECT10	65.	12.75	19.	6.	2.	0.50
+	2 COMBINED AT	COMB5	84.	13.33	42.	15.	5.	1.51
+	ROUTED TO	RT7	84.	13.92	41.	15.	5.	1.51
+	HYDROGRAPH AT	SECT13	54.	12.92	26.	10.	3.	1.00
+	ROUTED TO	RT8	54.	13.42	26.	10.	3.	1.00

+	HYDROGRAPH AT	SECT14	15.	14.50	10.	4.	1.	1.00
+	HYDROGRAPH AT	SECT15	81.	13.25	31.	10.	3.	0.69
+	4 COMBINED AT	COMB6	207.	13.67	104.	39.	13.	4.20
+	ROUTED TO	RT9	207.	14.08	104.	39.	13.	4.20
+	HYDROGRAPH AT	SECT24	27.	13.75	17.	7.	2.	1.00
+	ROUTED TO	RT10	27.	14.33	17.	7.	2.	1.00
+	HYDROGRAPH AT	SECT23	14.	15.17	10.	4.	1.	1.00
+	HYDROGRAPH AT	SECT22	79.	12.50	13.	4.	1.	0.13
+	4 COMBINED AT	COMB7	251.	14.17	134.	54.	18.	6.33
+	ROUTED TO	RT11	251.	14.42	134.	54.	18.	6.33
+	HYDROGRAPH AT	SECT26	221.	13.33	79.	24.	8.	1.00
+	2 COMBINED AT	COMB8	365.	14.25	207.	79.	26.	7.33
+	ROUTED TO	RT12	364.	14.50	206.	79.	26.	7.33
+	HYDROGRAPH AT	SECT28	71.	12.83	23.	8.	3.	0.69
+	HYDROGRAPH AT	SECT27	119.	13.92	60.	20.	7.	1.00
+	4 COMBINED AT	COMB9	760.	13.33	439.	156.	52.	11.26
+	ROUTED TO	RT13	757.	13.50	437.	155.	52.	11.26
+	HYDROGRAPH AT	SECT34	93.	13.50	39.	12.	4.	0.67
+	3 COMBINED AT	COMBB	2179.	13.58	1217.	687.	289.	26.26
+	HYDROGRAPH AT	SECT33	126.	12.75	28.	8.	3.	0.26
+	2 COMBINED AT	COMBB	2221.	13.58	1240.	695.	291.	26.52
+	HYDROGRAPH AT	SECT16	4.	14.83	3.	1.	0.	0.23
	ROUTED TO							

+		RT1	4.	15.83	3.	1.	0.	0.23		
+	HYDROGRAPH AT	SECT20	267.	12.42	38.	11.	4.	0.29		
+	2 COMBINED AT	COMB1	267.	12.42	40.	12.	4.	0.52		
+	ROUTED TO	RT2	264.	12.75	39.	12.	4.	0.52		
+	HYDROGRAPH AT	SECT29	95.	13.00	29.	9.	3.	0.50		
+	2 COMBINED AT	COMB2	342.	12.75	68.	21.	7.	1.02		
+	ROUTED TO	RT3	332.	13.00	68.	21.	7.	1.02		
+	HYDROGRAPH AT	SECT16	215.	12.75	49.	14.	5.	0.50		
+	ROUTED TO	RT4	212.	13.08	48.	14.	5.	0.50		
+	HYDROGRAPH AT	SECT21	217.	12.83	53.	16.	5.	0.59		
+	2 COMBINED AT	COMB3	405.	13.00	101.	30.	10.	1.09		
+	ROUTED TO	RT5	397.	13.33	100.	30.	10.	1.09		
+	HYDROGRAPH AT	SECT28	76.	12.92	21.	6.	2.	0.30		
+	2 COMBINED AT	COMB4	452.	13.25	120.	37.	12.	1.39		
+	ROUTED TO	RT6	443.	13.42	119.	37.	12.	1.39		
+	HYDROGRAPH AT	SECT32	135.	12.83	32.	10.	3.	0.33		
+	3 COMBINED AT	OUTLTC	719.	13.42	217.	68.	23.	2.74		
+	HYDROGRAPH AT	SECT33	126.	12.50	24.	8.	3.	0.53		
+	2 COMBINED AT	WCHAN	749.	13.42	241.	75.	25.	3.27		
+	2 COMBINED AT	INBB	2885.	13.58	1478.	770.	316.	29.79		
+	ROUTED TO	RFBAY	2881.	13.58	1460.	758.	311.	29.79		
+									1154.41	13.58
+	DIVERSION TO	RCB	804.	13.58	718.	535.	236.	29.79		
	HYDROGRAPH AT									

HWL in Forebay

+		DIVERT	2077.	13.58	742.	223.	74.	29.79		
+	ROUTED TO	RBAS	0.	23.00	0.	0.	0.	29.79	1154.61	25.83
+	HYDROGRAPH AT	RRCB	804.	13.58	718.	535.	236.	0.00		
+	2 COMBINED AT	OUTFL	804.	13.58	718.	535.	236.	29.79		
+	ROUTED TO	Rtgila	801.	13.67	716.	534.	236.	29.79		
+	HYDROGRAPH AT	GilaAe	124.	12.33	16.	5.	2.	0.10		
+	2 COMBINED AT	CGilaE	809.	13.67	720.	535.	237.	29.89		
+	ROUTED TO	RBI10	808.	13.75	719.	535.	237.	29.89		
+	HYDROGRAPH AT	GilaAw	145.	12.33	19.	5.	2.	0.11		
+	2 COMBINED AT	CGILAW	816.	13.75	723.	536.	239.	30.00	End Price/Santan to Gila Drain	
+	HYDROGRAPH AT	M1	248.	12.33	34.	9.	3.	0.11	Begin 4E St. / Basin 15	
+	ROUTED TO	RtC1	234.	12.33	34.	9.	3.	0.11	2.18	12.33
+	HYDROGRAPH AT	M2	512.	12.25	61.	17.	6.	0.20		
+	ROUTED TO	RtC2	513.	12.25	61.	17.	6.	0.20	3.72	12.25
+	HYDROGRAPH AT	A1	62.	12.25	7.	2.	1.	0.04		
+	3 COMBINED AT	COMB1	770.	12.25	102.	28.	9.	0.35		
+	DIVERSION TO	Splt1	462.	12.25	61.	17.	6.	0.35		
+	HYDROGRAPH AT	Splt1	308.	12.25	41.	11.	4.	0.35		
+	ROUTED TO	RtC3	306.	12.33	41.	11.	4.	0.35	1.92	12.33
+	HYDROGRAPH AT	M3	121.	12.08	9.	2.	1.	0.03		
+	ROUTED TO	RtC4	97.	12.17	9.	2.	1.	0.03	1.93	12.17

+	HYDROGRAPH AT	A2	37.	12.17	3.	1.	0.	0.02		
+	3 COMBINED AT	COMB2	389.	12.25	53.	15.	5.	0.40		
+	ROUTED TO	RtC5	377.	12.33	53.	15.	5.	0.40		
+									2.04	12.33
+	HYDROGRAPH AT	M4	581.	12.58	116.	32.	11.	0.38		
+	ROUTED TO	RtR1	580.	12.58	116.	32.	11.	0.38		
+									2.03	12.58
+	HYDROGRAPH AT	A3	59.	12.17	6.	2.	1.	0.04		
+	HYDROGRAPH AT	A4	129.	12.17	13.	4.	1.	0.07		
+	4 COMBINED AT	COMB3	949.	12.42	188.	53.	18.	0.88		
+	DIVERSION TO	RET1	56.	12.42	6.	1.	0.	0.88		
+	HYDROGRAPH AT	RET1	893.	12.42	183.	51.	17.	0.88		
+	ROUTED TO	RtC6	891.	12.42	183.	51.	17.	0.88		
+									3.40	12.42
+	HYDROGRAPH AT	A5	61.	12.17	6.	2.	1.	0.03		
+	2 COMBINED AT	COMB4	922.	12.42	189.	53.	18.	0.91		
+	DIVERSION TO	Splt2	276.	12.42	57.	16.	5.	0.91		
+	HYDROGRAPH AT	Splt2	645.	12.42	132.	37.	12.	0.91		
+	ROUTED TO	RtC7	639.	12.50	132.	37.	12.	0.91		
+									4.09	12.50
+	HYDROGRAPH AT	A6b	37.	12.17	4.	1.	0.	0.02		
+	ROUTED TO	RtR2	36.	12.25	4.	1.	0.	0.02		
+									1.12	12.25
+	HYDROGRAPH AT	R1	20.	12.17	2.	1.	0.	0.01		
+	2 COMBINED AT	Comb5	54.	12.25	6.	2.	1.	0.03		
+	DIVERSION TO	DivR1	54.	0.00	6.	2.	1.	0.03		

+	HYDROGRAPH AT	DivR1	0.	0.00	0.	0.	0.	0.03	
+	HYDROGRAPH AT	A6a	69.	12.25	7.	2.	1.	0.04	
+	ROUTED TO	RtC8	66.	12.25	7.	2.	1.	0.04	
+									2.15 12.25
+	HYDROGRAPH AT	A7	17.	12.17	2.	0.	0.	0.01	
+	4 COMBINED AT	Comb6	692.	12.42	141.	40.	13.	0.99	
+	ROUTED TO	RtC9	687.	12.50	141.	40.	13.	0.99	
+									4.76 12.50
+	HYDROGRAPH AT	A8	93.	12.25	11.	3.	1.	0.06	
+	HYDROGRAPH AT	R2	18.	12.17	2.	1.	0.	0.01	
+	HYDROGRAPH AT	A29	14.	12.17	1.	0.	0.	0.01	
+	4 COMBINED AT	COMB7	774.	12.42	155.	44.	15.	1.06	
+	ROUTED TO	RtC10	766.	12.42	155.	44.	15.	1.06	
+									4.91 12.42
+	HYDROGRAPH AT	A9	70.	12.25	8.	2.	1.	0.04	
+	HYDROGRAPH AT	A30	14.	12.17	1.	0.	0.	0.01	
+	3 COMBINED AT	COMB8	822.	12.42	165.	46.	15.	1.10	
+	DIVERSION TO	Splt3	140.	12.42	40.	11.	4.	1.10	
+	HYDROGRAPH AT	SPLT3	682.	12.42	125.	35.	12.	1.10	
+	ROUTED TO	RtC11	677.	12.50	125.	35.	12.	1.10	
+									4.74 12.50
+	HYDROGRAPH AT	A11	61.	12.25	7.	2.	1.	0.03	
+	HYDROGRAPH AT	A12	5.	12.08	0.	0.	0.	0.00	
+	DIVERSION TO	DvA12	4.	12.17	0.	0.	0.	0.00	
+	HYDROGRAPH AT	DvA12	4.	12.17	0.	0.	0.	0.00	

+	2 COMBINED AT	Comb9	64.	12.25	7.	2.	1.	0.04		
+	ROUTED TO	RtR3	58.	12.33	7.	2.	1.	0.04	1.24	12.33
+	HYDROGRAPH AT	A10	86.	12.17	9.	2.	1.	0.04		
+	DIVERSION TO	DvA10	86.	12.33	4.	1.	0.	0.04		
+	HYDROGRAPH AT	DvA10	57.	12.33	4.	1.	0.	0.04		
+	HYDROGRAPH AT	R3	19.	12.17	2.	1.	0.	0.01		
+	HYDROGRAPH AT	R4	15.	12.17	2.	0.	0.	0.00		
+	5 COMBINED AT	Comb10	770.	12.42	140.	39.	13.	1.19		
+	ROUTED TO	RtC12	766.	12.50	140.	39.	13.	1.19	5.08	12.50
+	HYDROGRAPH AT	RetR1	54.	12.25	6.	2.	1.	0.00		
+	ROUTED TO	RtR4	43.	12.33	6.	2.	1.	0.00	1.17	12.33
+	HYDROGRAPH AT	R6	22.	12.25	3.	1.	0.	0.01		
+	HYDROGRAPH AT	A13	3.	12.08	0.	0.	0.	0.00		
+	DIVERSION TO	DvA13	3.	13.75	0.	0.	0.	0.00		
+	HYDROGRAPH AT	DvA13	0.	13.75	0.	0.	0.	0.00		
+	3 COMBINED AT	Comb11	64.	12.33	9.	3.	1.	0.01		
+	ROUTED TO	RtC13	60.	12.33	9.	3.	1.	0.01	2.21	12.33
+	HYDROGRAPH AT	A14	95.	12.33	12.	3.	1.	0.08		
+	DIVERSION TO	DvA14	95.	12.83	9.	2.	1.	0.08		
+	HYDROGRAPH AT	DvA14	25.	12.83	4.	1.	0.	0.08		
+	HYDROGRAPH AT	R7a	13.	12.17	1.	0.	0.	0.00		

+	3 COMBINED AT	Comb12	67.	12.33	13.	4.	1.	0.09		
+	ROUTED TO	RtC14	65.	12.42	13.	4.	1.	0.09		
+									2.27	12.42
+	HYDROGRAPH AT	A15	118.	12.17	11.	3.	1.	0.05		
+	HYDROGRAPH AT	A31	14.	12.17	1.	0.	0.	0.00		
+	HYDROGRAPH AT	R7b	13.	12.17	1.	0.	0.	0.00		
+	HYDROGRAPH AT	R5	13.	12.08	1.	0.	0.	0.00		
+	6 COMBINED AT	Comb13	882.	12.42	168.	48.	16.	1.34		
+	ROUTED TO	RtC15	877.	12.50	168.	48.	16.	1.34		
+									4.76	12.50
+	ROUTED TO	RtR5	886.	12.50	168.	48.	16.	1.34		
+									1.99	12.50
+	HYDROGRAPH AT	R12A	15.	12.17	2.	0.	0.	0.00		
+	HYDROGRAPH AT	A16	43.	12.17	4.	1.	0.	0.01		
+	DIVERSION TO	DvA16	43.	12.33	3.	1.	0.	0.01		
+	HYDROGRAPH AT	DvA16	19.	12.33	2.	0.	0.	0.01		
+	HYDROGRAPH AT	A17	128.	12.25	16.	5.	2.	0.07		
+	4 COMBINED AT	Comb14	990.	12.50	187.	53.	18.	1.43		
+	ROUTED TO	RtR6	997.	12.50	187.	53.	18.	1.43		
+									2.06	12.50
+	DIVERSION TO	48-Est	499.	12.50	94.	27.	9.	1.43		
+	HYDROGRAPH AT	48-Sth	499.	12.50	94.	27.	9.	1.43		
+	HYDROGRAPH AT	A18	11.	12.17	1.	0.	0.	0.00		
+	HYDROGRAPH AT	R8	10.	12.17	1.	0.	0.	0.00		
+	2 COMBINED AT	Comb15	21.	12.17	2.	1.	0.	0.01		

+	ROUTED TO	RtR7	18.	12.17	2.	1.	0.	0.01	1.10	12.17
+	HYDROGRAPH AT	R9	7.	12.08	1.	0.	0.	0.00		
+	HYDROGRAPH AT	A19	63.	12.25	8.	2.	1.	0.04		
+	3 COMBINED AT	Comb16	85.	12.25	10.	3.	1.	0.05		
+	ROUTED TO	RtR8	83.	12.25	10.	3.	1.	0.05	1.25	12.25
+	HYDROGRAPH AT	A20	40.	12.17	4.	1.	0.	0.02		
+	DIVERSION TO	DvA20	40.	12.42	2.	1.	0.	0.02		
+	HYDROGRAPH AT	DvA20	17.	12.42	2.	1.	0.	0.02		
+	HYDROGRAPH AT	R10	13.	12.08	1.	0.	0.	0.00		
+	3 COMBINED AT	Comb17	91.	12.25	13.	4.	1.	0.07		
+	ROUTED TO	RtR9	85.	12.42	13.	4.	1.	0.07	1.24	12.42
+	HYDROGRAPH AT	A21	112.	12.33	15.	4.	1.	0.08		
+	DIVERSION TO	21-Est	70.	12.33	13.	4.	1.	0.08		
+	HYDROGRAPH AT	21-Sth	42.	12.33	2.	0.	0.	0.08		
+	ROUTED TO	RtR10	38.	12.42	2.	0.	0.	0.08	1.16	12.42
+	HYDROGRAPH AT	R11	20.	12.25	3.	1.	0.	0.01		
+	HYDROGRAPH AT	A22	93.	12.17	9.	2.	1.	0.03		
+	DIVERSION TO	DvA22	93.	12.33	6.	1.	0.	0.03		
+	HYDROGRAPH AT	DvA22	45.	12.33	4.	1.	0.	0.03		
+	HYDROGRAPH AT	R12b	15.	12.17	2.	0.	0.	0.00		
+	HYDROGRAPH AT	Retn48	499.	12.50	94.	27.	9.	0.00		

```
+          6 COMBINED AT
                          Comb18     655.  12.42     116.     33.     11.     0.19
+          DIVERSION TO
                          RayEst     140.  12.42      63.     20.      7.     0.19
+          HYDROGRAPH AT
                          RaySth     515.  12.42      54.     13.      4.     0.19
+          2 COMBINED AT
                          Comb19    1011.  12.50     147.     40.     13.     1.63
+          ROUTED TO
+                           RtC16    1013.  12.50     147.     40.     13.     1.63
+                                                                          3.79      12.50
+          HYDROGRAPH AT
                              A27      47.  12.58       9.      3.      1.     0.04
+          ROUTED TO
+                           RtC17      46.  12.67       9.      3.      1.     0.04
+                                                                          1.33      12.67
+          HYDROGRAPH AT
                              A28     259.  12.50      42.     12.      4.     0.22
+          HYDROGRAPH AT
                              R13      17.  12.25       2.      1.      0.     0.01
+          4 COMBINED AT
                          Comb20    1323.  12.50     201.     55.     18.     1.89
+          ROUTED TO
+                             RET2    1160.  12.67     181.     53.     18.     1.89
+                                                                         20.77      12.67
+          DIVERSION TO
                             South      85.  12.67      74.     26.      9.     1.89
+          HYDROGRAPH AT
                              East    1075.  12.67     108.     27.      9.     1.89
+          ROUTED TO
+                           RtEAST    1174.  12.67     108.     27.      9.     1.89
+                                                                          4.24      12.67
+          HYDROGRAPH AT
                                C      68.  12.17       6.      2.      1.     0.03
+          2 COMBINED AT
                             COMBC    1182.  12.67     114.     29.     10.     1.92
+          ROUTED TO
+                               RtC    1172.  12.67     114.     29.     10.     1.92
+                                                                          4.24      12.67
+          HYDROGRAPH AT
                                D     136.  12.17      12.      3.      1.     0.06
+          ROUTED TO
+                            ROUTED     125.  12.17      12.      3.      1.     0.06
+                                                                        101.23      12.17
+          HYDROGRAPH AT
                                E      68.  12.17       6.      2.      1.     0.03
```

+	ROUTED TO	ROUTEE	61.	12.17	6.	2.	1.	0.03		
+									100.84	12.17
+	3 COMBINED AT	COMBE	1211.	12.67	132.	34.	11.	2.01		
+	ROUTED TO	RTEE	1180.	12.75	132.	34.	11.	2.01		
+									4.45	12.75
+	HYDROGRAPH AT	DA522A	92.	12.25	10.	3.	1.	0.06		
+	2 COMBINED AT	AD522A	1199.	12.75	142.	37.	12.	2.06		
+	ROUTED TO	RT522A	1234.	12.75	142.	37.	12.	2.06		
+									4.55	12.75
+	HYDROGRAPH AT	DA522B	92.	12.25	10.	3.	1.	0.06		
+	2 COMBINED AT	AD522B	1253.	12.75	152.	39.	13.	2.12		
+	ROUTED TO	RT522B	1173.	12.75	152.	39.	13.	2.12		
+									4.44	12.75
+	HYDROGRAPH AT	Retn21	70.	12.17	13.	4.	1.	0.00		
+	ROUTED TO	RtP1	72.	12.25	13.	4.	1.	0.00		
+									2.48	12.25
+	HYDROGRAPH AT	A25	70.	12.25	9.	2.	1.	0.04		
+	2 COMBINED AT	Comb21	142.	12.25	22.	6.	2.	0.04		
+	ROUTED TO	RtP2	142.	12.25	22.	6.	2.	0.04		
+									3.21	12.25
+	HYDROGRAPH AT	A23	68.	12.25	8.	2.	1.	0.04		
+	DIVERSION TO	DvA23	68.	12.50	5.	1.	0.	0.04		
+	HYDROGRAPH AT	DvA23	32.	12.50	3.	1.	0.	0.04		
+	ROUTED TO	RtC18	20.	12.75	3.	1.	0.	0.04		
+									0.24	12.75
+	HYDROGRAPH AT	A24	32.	12.42	5.	1.	0.	0.06		
+	3 COMBINED AT	Comb22	168.	12.33	30.	9.	3.	0.15		

+	ROUTED TO	RET3	92.	12.83	29.	8.	3.	0.15	
+									23.14 12.83
+	ROUTED TO	RtC19	92.	12.83	29.	8.	3.	0.15	
+									1.97 12.83
+	HYDROGRAPH AT	A26	136.	12.17	13.	4.	1.	0.05	
+	DIVERSION TO	DvA26	136.	12.33	8.	2.	1.	0.05	
+	HYDROGRAPH AT	DvA26	62.	12.33	5.	2.	1.	0.05	
+	HYDROGRAPH AT	RtnRay	140.	12.08	63.	20.	7.	0.00	
+	ROUTED TO	RtR11	140.	12.67	63.	20.	7.	0.00	
+									1.33 12.83
+	HYDROGRAPH AT	R14	21.	12.25	3.	1.	0.	0.01	
+	4 COMBINED AT	Comb23	279.	12.33	99.	31.	10.	0.20	
+	DIVERSION TO	DIVBOX	126.	12.33	24.	6.	2.	0.20	
+	HYDROGRAPH AT	DIV520	153.	12.33	75.	24.	8.	0.20	
+	ROUTED TO	RTE23	153.	12.42	75.	24.	8.	0.20	
+									1.24 12.42
+	HYDROGRAPH AT	DIVBOX	126.	12.33	24.	6.	2.	0.00	
+	2 COMBINED AT	ADDBOX	277.	12.33	99.	31.	10.	0.20	
+	HYDROGRAPH AT	VA1	204.	12.25	22.	6.	2.	0.11	
+	2 COMBINED AT	COMBA1	446.	12.33	121.	37.	12.	0.31	
+	ROUTED TO	RTEA1	433.	12.33	121.	37.	12.	0.31	
+									3.38 12.33
+	HYDROGRAPH AT	VA2	304.	12.25	35.	10.	3.	0.17	
+	2 COMBINED AT	COMBA	705.	12.33	156.	46.	16.	0.48	
+	ROUTED TO	STORA2	634.	12.42	119.	35.	12.	0.48	
+	ROUTED TO	RTEA2	670.	12.50	119.	35.	12.	0.48	

```
+                                                                                    2.96      12.50
          HYDROGRAPH AT
+                          B     137.  12.17     12.     3.     1.    0.06
          2 COMBINED AT
+                       COMBB    709.  12.50    128.    39.    13.    0.54
          ROUTED TO
+                        RtB     657.  12.50    128.    39.    13.    0.54
+                                                                                    3.16      12.50
          HYDROGRAPH AT
+                          F      91.  12.17      8.     2.     1.    0.04
          HYDROGRAPH AT
+                       R200     208.  12.33     29.     8.     3.    0.14
          ROUTED TO
+                     ROUTER     176.  12.50     28.     8.     3.    0.14
+                                                                                  101.48      12.50
          3 COMBINED AT
+                       COMBF     860.  12.50    165.    49.    16.    0.72
          ROUTED TO
+                        RTEF     846.  12.58    165.    49.    16.    0.72
+                                                                                    3.77      12.58
          HYDROGRAPH AT
+                     DA522C      74.  12.17      8.     2.     1.    0.04
          2 COMBINED AT
+                     AD522C     871.  12.58    172.    51.    17.    0.77
          ROUTED TO
+                     RT522C     887.  12.58    172.    51.    17.    0.77
+                                                                                    4.39      12.58
          HYDROGRAPH AT
+                     DA522D      42.  12.17      4.     1.     0.    0.02
          2 COMBINED AT
+                     AD522D     899.  12.58    176.    52.    17.    0.79
          ROUTED TO
+                     RT522D     875.  12.67    176.    52.    17.    0.79
+                                                                                    4.36      12.67
          HYDROGRAPH AT
+                     DA522E      98.  12.17      9.     2.     1.    0.05
          3 COMBINED AT
+                     AD522E    1809.  12.75    337.    94.    31.    2.96
          HYDROGRAPH AT
+                      DA513     152.  12.25     18.     5.     2.    0.09
          HYDROGRAPH AT
+                      DA514     107.  12.17     11.     3.     1.    0.06
          HYDROGRAPH AT
+                      DA515      81.  12.25      9.     3.     1.    0.05
          3 COMBINED AT
+                      AD515     336.  12.25     38.    11.     4.    0.19
```

+	ROUTED TO	RT515	301.	12.33	38.	11.	4.	0.19	6.80	12.33
+	HYDROGRAPH AT	DA517	185.	12.33	25.	7.	2.	0.17		
+	HYDROGRAPH AT	South	85.	12.50	74.	26.	9.	0.00		
+	3 COMBINED AT	AD517	549.	12.33	133.	43.	14.	0.36		
+	ROUTED TO	RT517	537.	12.42	133.	43.	14.	0.36	11.30	12.42
+	HYDROGRAPH AT	DA518	82.	12.67	17.	5.	2.	0.10		
+	2 COMBINED AT	AD518	597.	12.42	150.	48.	16.	0.46		
+	ROUTED TO	RT518	594.	12.42	150.	48.	16.	0.46	3.14	12.42
+	HYDROGRAPH AT	DA519A	96.	12.17	9.	3.	1.	0.05		
+	ROUTED TO	RT519A	86.	12.25	9.	3.	1.	0.05	1.25	12.25
+	HYDROGRAPH AT	DA519B	207.	12.25	24.	7.	2.	0.14		
+	3 COMBINED AT	AD519B	802.	12.42	182.	57.	19.	0.64		
+	ROUTED TO	RT519B	805.	12.42	182.	57.	19.	0.64	3.50	12.42
+	HYDROGRAPH AT	DA519C	297.	12.25	34.	9.	3.	0.17		
+	ROUTED TO	RT519C	290.	12.25	34.	9.	3.	0.17	2.74	12.25
+	HYDROGRAPH AT	DA519D	118.	12.25	14.	4.	1.	0.08		
+	3 COMBINED AT	AD519D	1144.	12.33	228.	71.	24.	0.89		
+	ROUTED TO	RT519D	1140.	12.33	228.	71.	24.	0.89	3.89	12.33
+	HYDROGRAPH AT	DA519E	69.	12.17	6.	2.	1.	0.03		
+	ROUTED TO	RT519E	54.	12.25	6.	2.	1.	0.03	1.07	12.25

+	HYDROGRAPH AT	DA519F	158.	12.25	20.	6.	2.	0.10	
+	2 COMBINED AT	AD519F	212.	12.25	27.	7.	2.	0.13	
+	HYDROGRAPH AT	DA519G	61.	12.17	6.	2.	1.	0.03	
+	4 COMBINED AT	AD519G	2511.	12.75	597.	174.	58.	4.01	
+	ROUTED TO	RTI-10	2518.	12.75	597.	174.	58.	4.01	
+									7.97 12.75
+	HYDROGRAPH AT	B1	198.	12.25	22.	6.	2.	0.11	
+	ROUTED TO	RTEB1	178.	12.33	22.	6.	2.	0.11	
+									1.64 12.33
+	2 COMBINED AT	ADI-10	2573.	12.75	618.	180.	60.	4.12	
+	HYDROGRAPH AT	B15	202.	12.33	26.	7.	2.	0.13	
+	2 COMBINED AT	ADBA15	2647.	12.75	644.	187.	62.	4.24	
+	HYDROGRAPH AT	PMP	211.	12.50	38.	17.	12.	0.16	
+	2 COMBINED AT	ADPMP	2834.	12.33	681.	204.	74.	4.40	
+	DIVERSION TO	DIVFF	1029.	12.33	50.	13.	4.	4.40	
+	HYDROGRAPH AT	B15FF	2834.	12.33	645.	192.	70.	4.40	
+	DIVERSION TO	DIVB15	2834.	0.00	645.	192.	70.	4.40	
+	HYDROGRAPH AT	B15RCB	0.	0.00	0.	0.	0.	4.40	End 46th St. / Basin 15
+	2 COMBINED AT	I10W	816.	13.75	723.	536.	239.	34.40	Begin Gila Drain Floodway
+	ROUTED TO	RI10W	813.	13.83	722.	536.	239.	34.40	
+									1151.83 13.83
+	ROUTED TO	R1Gila	781.	14.33	711.	528.	234.	34.40	
+									39.05 14.33
+	ROUTED TO	R2Gila	732.	15.92	688.	508.	225.	34.40	
+									35.01 15.92
	ROUTED TO								

```
+                    R3Gila      709.   16.83        680.       492.       218.      34.40
+                                                                                          26.77       16.83
1
                                   SUMMARY OF KINEMATIC WAVE - MUSKINGUM-CUNGE ROUTING
                                       (FLOW IS DIRECT RUNOFF WITHOUT BASE FLOW)
                                                                          INTERPOLATED TO
                                                                      COMPUTATION INTERVAL
          ISTAQ    ELEMENT      DT       PEAK    TIME TO     VOLUME      DT       PEAK    TIME TO     VOLUME
                                                   PEAK                                     PEAK

                              (MIN)     (CFS)     (MIN)      (IN)    (MIN)     (CFS)    (MIN)       (IN)

          rtbasg   MANE        3.00    189.98   1016.00      0.93     5.00    189.97   1015.00       0.93

CONTINUITY SUMMARY (AC-FT) - INFLOW=0.2162E+03 EXCESS=0.0000E+00 OUTFLOW=0.2162E+03 BASIN STORAGE=0.4429E-02 PERCENT ERROR=   0.0

             RT1   MANE        1.45    969.64    815.29      2.07     5.00    969.02    815.00       2.07

CONTINUITY SUMMARY (AC-FT) - INFLOW=0.1262E+04 EXCESS=0.0000E+00 OUTFLOW=0.1262E+04 BASIN STORAGE=0.4085E+00 PERCENT ERROR=  -0.1

             RT1   MANE        4.87    222.35    809.68      0.88     5.00    222.20    810.00       0.88

CONTINUITY SUMMARY (AC-FT) - INFLOW=0.4703E+02 EXCESS=0.0000E+00 OUTFLOW=0.4699E+02 BASIN STORAGE=0.1506E-05 PERCENT ERROR=   0.1

           RT2536   MANE        0.67   1331.28    811.42      1.92     5.00   1319.15    815.00       1.92

CONTINUITY SUMMARY (AC-FT) - INFLOW=0.1355E+04 EXCESS=0.0000E+00 OUTFLOW=0.1355E+04 BASIN STORAGE=0.2991E+00 PERCENT ERROR=   0.0

             RT1   MANE        3.06      5.36    890.68      0.26     5.00      5.36    890.00       0.26

CONTINUITY SUMMARY (AC-FT) - INFLOW=0.2950E+01 EXCESS=0.0000E+00 OUTFLOW=0.2951E+01 BASIN STORAGE=0.1935E-08 PERCENT ERROR=   0.0

             RT2   MANE        4.50      1.78    874.14      0.20     5.00      1.78    875.00       0.20

CONTINUITY SUMMARY (AC-FT) - INFLOW=0.9822E+00 EXCESS=0.0000E+00 OUTFLOW=0.9823E+00 BASIN STORAGE=0.6775E-08 PERCENT ERROR=   0.0

             RT3   MANE        0.99   1334.70    815.50      1.88     5.00   1333.57    815.00       1.87

CONTINUITY SUMMARY (AC-FT) - INFLOW=0.1365E+04 EXCESS=0.0000E+00 OUTFLOW=0.1364E+04 BASIN STORAGE=0.4183E+00 PERCENT ERROR=   0.0

             RT4   MANE        1.37     73.73    753.45      1.47     5.00     73.39    755.00       1.47

CONTINUITY SUMMARY (AC-FT) - INFLOW=0.6979E+01 EXCESS=0.0000E+00 OUTFLOW=0.6982E+01 BASIN STORAGE=0.9618E-09 PERCENT ERROR=   0.0

             RT5   MANE        1.83     73.08    759.13      0.48     5.00     72.50    760.00       0.48

CONTINUITY SUMMARY (AC-FT) - INFLOW=0.1024E+02 EXCESS=0.0000E+00 OUTFLOW=0.1024E+02 BASIN STORAGE=0.9097E-08 PERCENT ERROR=   0.0

            RT35   MANE        1.93   1360.69    818.86      1.81     5.00   1345.27    820.00       1.81
```

```
CONTINUITY SUMMARY (AC-FT) - INFLOW=0.1384E+04 EXCESS=0.0000E+00 OUTFLOW=0.1384E+04 BASIN STORAGE=0.8796E+00 PERCENT ERROR=  -0.1

              RT1  MANE        5.00     36.77    786.27      0.69      5.00     36.62    785.00        0.69

CONTINUITY SUMMARY (AC-FT) - INFLOW=0.6956E+01 EXCESS=0.0000E+00 OUTFLOW=0.6954E+01 BASIN STORAGE=0.1052E-06 PERCENT ERROR=   0.0

              RT2  MANE        4.93    121.84    808.21      0.75      5.00    121.13    805.00        0.75

CONTINUITY SUMMARY (AC-FT) - INFLOW=0.2200E+02 EXCESS=0.0000E+00 OUTFLOW=0.2200E+02 BASIN STORAGE=0.1486E-04 PERCENT ERROR=   0.0

              RT3  MANE        4.63    230.25    818.71      0.91      5.00    228.81    820.00        0.91

CONTINUITY SUMMARY (AC-FT) - INFLOW=0.4828E+02 EXCESS=0.0000E+00 OUTFLOW=0.4830E+02 BASIN STORAGE=0.2291E-04 PERCENT ERROR=  -0.1

              RT4  MANE        5.00    419.26    783.77      0.82      5.00    417.10    785.00        0.82

CONTINUITY SUMMARY (AC-FT) - INFLOW=0.9772E+02 EXCESS=0.0000E+00 OUTFLOW=0.9760E+02 BASIN STORAGE=0.4090E-04 PERCENT ERROR=   0.1

              RT5  MANE        5.00      6.32    934.56      0.14      5.00      6.32    935.00        0.14

CONTINUITY SUMMARY (AC-FT) - INFLOW=0.3839E+01 EXCESS=0.0000E+00 OUTFLOW=0.3840E+01 BASIN STORAGE=0.3322E-06 PERCENT ERROR=   0.0

              RT6  MANE        5.00     51.30    809.64      0.33      5.00     51.26    810.00        0.33

CONTINUITY SUMMARY (AC-FT) - INFLOW=0.1787E+02 EXCESS=0.0000E+00 OUTFLOW=0.1786E+02 BASIN STORAGE=0.1710E-05 PERCENT ERROR=   0.1

              RT7  MANE        5.00     84.04    834.55      0.38      5.00     83.94    835.00        0.38

CONTINUITY SUMMARY (AC-FT) - INFLOW=0.3039E+02 EXCESS=0.0000E+00 OUTFLOW=0.3038E+02 BASIN STORAGE=0.2638E-04 PERCENT ERROR=   0.0

              RT8  MANE        5.00     53.94    805.24      0.36      5.00     53.82    805.00        0.36

CONTINUITY SUMMARY (AC-FT) - INFLOW=0.1908E+02 EXCESS=0.0000E+00 OUTFLOW=0.1919E+02 BASIN STORAGE=0.2429E-05 PERCENT ERROR=  -0.6

              RT9  MANE        4.97    206.80    843.86      0.35      5.00    206.75    845.00        0.35

CONTINUITY SUMMARY (AC-FT) - INFLOW=0.7804E+02 EXCESS=0.0000E+00 OUTFLOW=0.7802E+02 BASIN STORAGE=0.8735E-04 PERCENT ERROR=   0.0

             RT10  MANE        4.91     27.28    863.89      0.25      5.00     27.28    860.00        0.25

CONTINUITY SUMMARY (AC-FT) - INFLOW=0.1329E+02 EXCESS=0.0000E+00 OUTFLOW=0.1329E+02 BASIN STORAGE=0.1912E-05 PERCENT ERROR=   0.0

             RT11  MANE        4.92    250.88    868.68      0.32      5.00    250.68    865.00        0.32
```

```
CONTINUITY SUMMARY (AC-FT) - INFLOW=0.1074E+03 EXCESS=0.0000E+00 OUTFLOW=0.1076E+03 BASIN STORAGE=0.1700E-03 PERCENT ERROR=  -0.2

            RT12  MANE        5.00    363.79    866.99      0.40      5.00    363.70    870.00       0.40

CONTINUITY SUMMARY (AC-FT) - INFLOW=0.1561E+03 EXCESS=0.0000E+00 OUTFLOW=0.1560E+03 BASIN STORAGE=0.2962E-03 PERCENT ERROR=   0.0

            RT13  MANE        5.00    757.78    809.76      0.51      5.00    757.49    810.00       0.51

CONTINUITY SUMMARY (AC-FT) - INFLOW=0.3087E+03 EXCESS=0.0000E+00 OUTFLOW=0.3085E+03 BASIN STORAGE=0.3493E-03 PERCENT ERROR=   0.1

             RT1  MANE        5.00      4.13    948.98      0.19      5.00      4.13    950.00       0.19

CONTINUITY SUMMARY (AC-FT) - INFLOW=0.2376E+01 EXCESS=0.0000E+00 OUTFLOW=0.2376E+01 BASIN STORAGE=0.1754E-05 PERCENT ERROR=   0.0

             RT2  MANE        3.85    263.74    765.08      0.86      5.00    263.68    765.00       0.86

CONTINUITY SUMMARY (AC-FT) - INFLOW=0.2387E+02 EXCESS=0.0000E+00 OUTFLOW=0.2393E+02 BASIN STORAGE=0.1525E-04 PERCENT ERROR=  -0.2

             RT3  MANE        3.80    336.66    775.86      0.78      5.00    332.07    780.00       0.78

CONTINUITY SUMMARY (AC-FT) - INFLOW=0.4230E+02 EXCESS=0.0000E+00 OUTFLOW=0.4258E+02 BASIN STORAGE=0.2116E-04 PERCENT ERROR=  -0.7

             RT4  MANE        5.00    213.46    786.95      1.07      5.00    211.75    785.00       1.06

CONTINUITY SUMMARY (AC-FT) - INFLOW=0.2834E+02 EXCESS=0.0000E+00 OUTFLOW=0.2840E+02 BASIN STORAGE=0.3142E-05 PERCENT ERROR=  -0.2

             RT5  MANE        5.00    403.35    797.39      1.03      5.00    397.35    800.00       1.03

CONTINUITY SUMMARY (AC-FT) - INFLOW=0.5995E+02 EXCESS=0.0000E+00 OUTFLOW=0.5991E+02 BASIN STORAGE=0.1825E-04 PERCENT ERROR=   0.1

             RT6  MANE        4.75    450.11    806.98      0.98      5.00    443.39    805.00       0.98

CONTINUITY SUMMARY (AC-FT) - INFLOW=0.7263E+02 EXCESS=0.0000E+00 OUTFLOW=0.7253E+02 BASIN STORAGE=0.2258E-04 PERCENT ERROR=   0.1

           Rtgila  MANE        2.75    801.40    822.25      0.88      5.00    800.98    820.00       0.88

CONTINUITY SUMMARY (AC-FT) - INFLOW=0.1407E+04 EXCESS=0.0000E+00 OUTFLOW=0.1404E+04 BASIN STORAGE=0.2378E+01 PERCENT ERROR=   0.0

            RBI10  MANE        4.60    807.76    823.03      0.89      5.00    807.59    825.00       0.89

CONTINUITY SUMMARY (AC-FT) - INFLOW=0.1413E+04 EXCESS=0.0000E+00 OUTFLOW=0.1412E+04 BASIN STORAGE=0.1155E+01 PERCENT ERROR=   0.0
```

*** NORMAL END OF HEC-1 ***

F.H.W.A. REGION	STATE	PROJECT NO.	SHEET NO.	TOTAL SHEETS	AS BUILT
	ARIZ.				

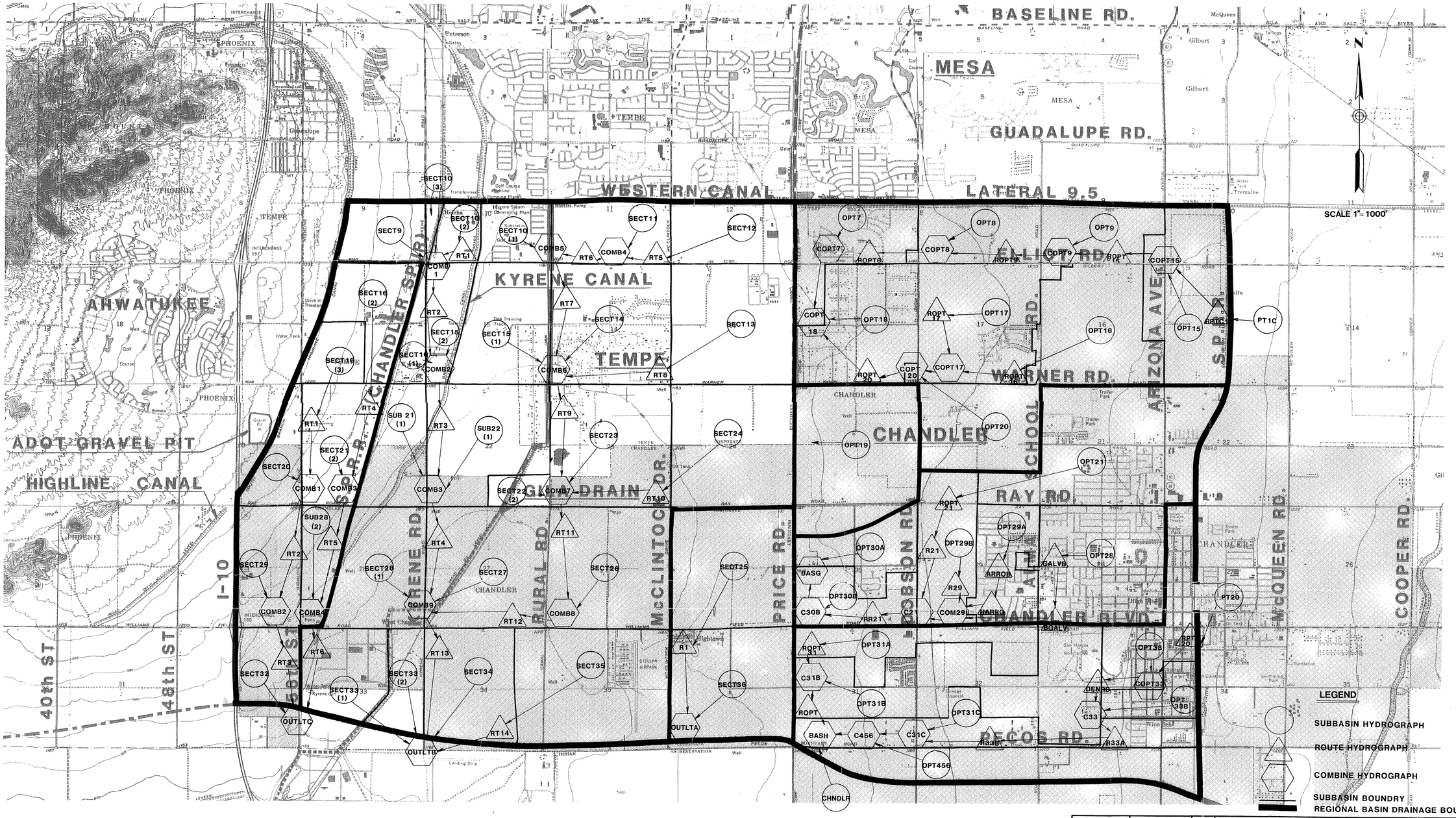

This Schematic is included in the *Final Drainage Report, Phase 1 and Phase 2, Santan Channel Project*, ADOT Contract No. 97-16, May 1998 for reference only. The routings east of Price Road changed as a result of the Gila Drain Alternative study that directed flows from Basin G south to the Gila Drain as shown in the Concept Drainage Plan dated January 1992. The HEC-1 model structure west of Price Road remains the same except for the Santan Channel routings along Pecos Road to Basin B.

	NAME	DATE
DESIGN		12-87
DRAWN		
CHECKED		

HDR Engineering, Inc.

ROUTE | MILEPOST

ARIZONA DEPARTMENT OF TRANSPORTATION
HIGHWAYS DIVISION
HIGHWAY PLANS

HYDROLOGY STUDY
DRAINAGE AREA MAP
AND HEC-1 MODEL SCHEMATIC

LOCATION

SHEET 2 OF 5

SURVEY NO.	FINISHED PLANS	REVISIONS	LOCATION	DATE

H-2222-01D

___ OF ___

116390

F.H.V.A. REGION	STATE	PROJECT NO.	SHEET NO.	TOTAL SHEETS	AS BUILT
	ARIZ.				

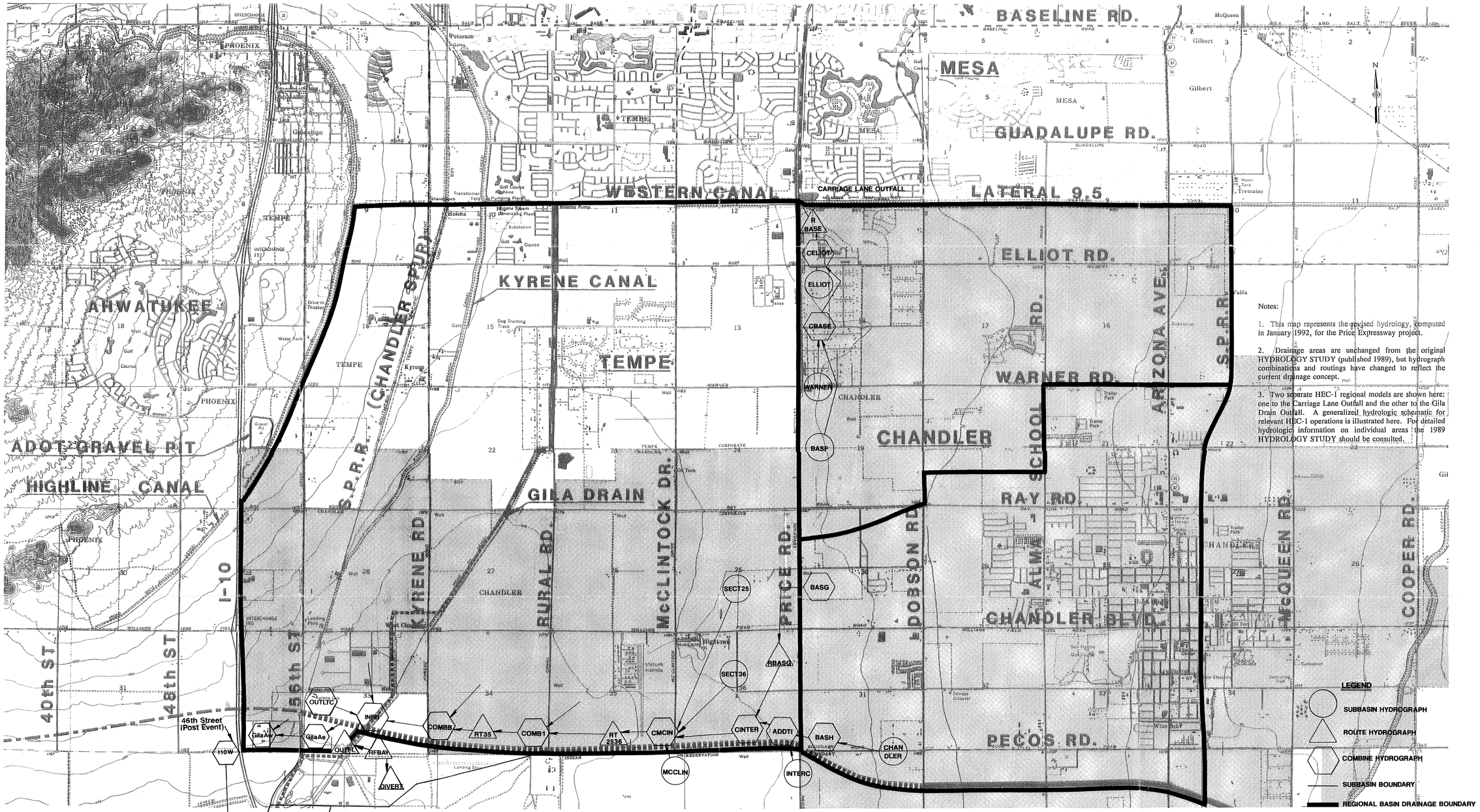

Notes:

1. This map represents the revised hydrology, computed in January 1992, for the Price Expressway project.

2. Drainage areas are unchanged from the original HYDROLOGY STUDY (published 1989), but hydrograph combinations and routings have changed to reflect the current drainage concept.

3. Two separate HEC-1 regional models are shown here: one to the Carriage Lane Outfall and the other to the Gila Drain Outfall. A generalized hydrologic schematic for relevant HEC-1 operations is illustrated here. For detailed hydrologic information on individual areas the 1989 HYDROLOGY STUDY should be consulted.

LEGEND

- SUBBASIN HYDROGRAPH
- ROUTE HYDROGRAPH
- COMBINE HYDROGRAPH
- SUBBASIN BOUNDARY
- REGIONAL BASIN DRAINAGE BOUNDARY

Schematic was revised in May 1998 to reflect changes to the Basin B and Outfall Channel routings for Phases 1 and 2 of the Santan Channel Project. Changes are for the HEC-1 Model File No. SVRD05–2.OUT included in the *Final Drainage Report, Phase 1 and Phase 2, Santan Channel Project,* ADOT Contract No. 97-16, May 1998.

	NAME	DATE
DESIGN	EL	1-92
DRAWN	JOM	1-92
CHECKED		

HDR Engineering, Inc.

ROUTE | MILEPOST

ARIZONA DEPARTMENT OF TRANSPORTATION
HIGHWAYS DIVISION
HIGHWAY PLANS

CONCEPT DRAINAGE PLAN
HYDROLOGY SCHEMATIC

LOCATION
PRICE EXPRESSWAY/SANTAN FREEWAY

SHEET OF

H-2222-01 D

SURVEY NO.	FINISHED PLANS	REVISIONS	LOCATION	DATE

APPENDIX B

Channel Hydraulic Analysis
HEC-RAS Model

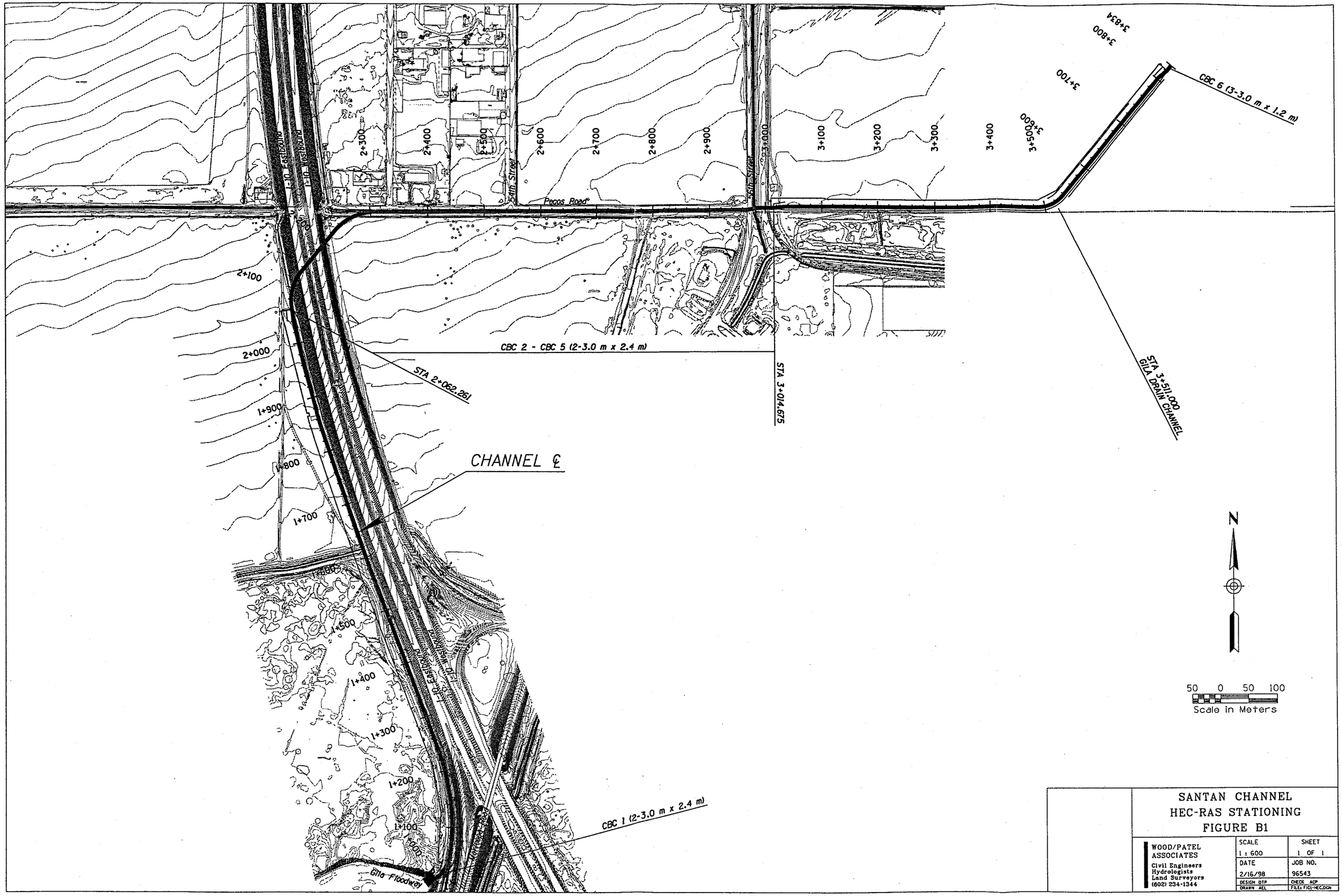

SANTAN CHANNEL
HEC-RAS STATIONING
FIGURE B1

WOOD/PATEL ASSOCIATES Civil Engineers Hydrologists Land Surveyors (602) 234-1344	SCALE 1 : 600	SHEET 1 OF 1
	DATE 2/16/98	JOB NO. 96543
	DESIGN DTP DRAWN AEL	CHECK ACP FILE: FIG1-HEC.DGN

V:/970604/fig1-hec.dgn May 28 1998 09:39:24

TABLE B1
HEC-RAS to Channel Station Relationship

Description	Distance From Previous Section meters	Station from Plan set, meters	HEC-RAS Section # NEW	Invert Elevation meters
Begin CBC1		0+000.000	1000	346.700
End CBC1/Begin Channel Transition	16.5	0+016.500	1016.5	346.730
End Channel Transition	20	0+036.500	1036.5	346.738
Begin Ramp	34.5	0+071.000	1071	346.752
End Ramp	35	0+106.000	1106	346.766
End Ramp Transition	11	0+117.000	1117	346.770
Grade Break	503	0+620.000	1620	346.970
Begin Ramp Transition	167	0+787.000	1787	347.080
Begin Ramp	18	0+805.000	1805	347.091
End Ramp	35	0+840.000	1840	347.114
Begin Trap Depth Trans	20	0+860.000	1860	347.127
Begin Channel Trans, End Trap	182.181	1+042.181	2042.181	347.247
End Channel Transition	19.98	1+062.161	2062.161	347.260
Begin CBC2, Grade Brk.	0.1	1+062.261	2062.261	347.260
PC - End CBC2/Begin CBC3, Grade Brk.	142.739	1+205.000	2205	347.361
PC - End CBC3/Begin CBC4	794.276	1+999.276	2999.276	347.968
End CBC4/Begin CBC5	10.6	2+009.876	3009.876	347.976
End CBC5/Begin Channel Transition	4.799	2+014.675	3014.675	347.980
End Channel Transition\Begin Conc. Trap. Channel	20.093	2+034.768	3034.768	348.637
Begin Ramp	23.232	2+058.000	3058	348.653
End Ramp	30	2+088.000	3088	348.675
End Ramp Transition	17	2+105.000	3105	348.687
Grade Break	235	2+340.000	3340	348.853
Begin Ramp Transition	399	2+739.000	3739	349.214
Begin Ramp	17	2+756.000	3756	349.229
End Ramp	30	2+786.000	3786	349.257
Begin Channel Trans, End Trap	16.422	2+802.422	3802.422	349.271
Begin CBC6, End Channel Transition	20.32	2+822.742	3822.742	349.290
End CBC6	11.15	2+833.892	3833.892	350.550

TABLE B2
HEC-RAS Output for South Reach of Santan Channel, Design Q = 22.65 cms (800 cfs)

Profile Output Table - Standard Table 1
HEC-RAS Plan: PhII-FIN River: Santan South Reach: Santan South

Reach	River Sta	Q Total (m3/s)	Min Ch El (m)	W.S. Elev (m)	Crit W.S. (m)	E.G. Elev (m)	E.G. Slope (m/m)	Vel Chnl (m/s)	Flow Area (m2)	Top Width (m)	Froude # Chl	
Santan South	3833.892	22.653	350.550	351.860	351.370	352.004	0.000827	1.82	12.47	9.70	0.51	a
Santan South	3833.000	Culvert										
Santan South	3822.742	22.653	349.289	351.432	350.108	351.492	0.000179	1.09	20.79	9.70	0.24	
Santan South	3822.642	22.653	349.289	351.437	349.959	351.470	0.000087	0.80	28.16	13.11	0.18	
Santan South	3802.422	22.653	349.270	351.192	350.705	351.376	0.000826	1.90	11.93	10.08	0.56	
Santan South	3794.21*	22.653	349.264	351.185	350.697	351.369	0.000825	1.90	11.94	10.08	0.56	
Santan South	3786.000	22.653	349.258	351.179	350.691	351.362	0.000826	1.90	11.93	10.08	0.56	
Santan South	3776.*	22.653	349.249	351.182	350.680	351.347	0.000952	1.80	12.62	13.14	0.58	
Santan South	3766.*	22.653	349.237	351.217	350.590	351.323	0.000462	1.44	15.76	13.31	0.42	
Santan South	3756.000	22.653	349.228	351.234	350.308	351.309	0.000266	1.21	18.66	13.42	0.33	
Santan South	3747.5*	22.653	349.222	351.191	350.451	351.302	0.000437	1.48	15.31	11.78	0.41	
Santan South	3739.000	22.653	349.215	351.090	350.648	351.288	0.000919	1.97	11.47	9.90	0.59	
Santan South	3710.5*	22.653	349.188	351.064	350.620	351.262	0.000915	1.97	11.49	9.90	0.58	
Santan South	3682.*	22.653	349.164	351.037	350.596	351.236	0.000920	1.98	11.46	9.90	0.59	
Santan South	3653.5*	22.653	349.139	351.011	350.572	351.210	0.000923	1.98	11.45	9.90	0.59	
Santan South	3625.*	22.653	349.112	350.984	350.545	351.184	0.000923	1.98	11.45	9.89	0.59	
Santan South	3596.5*	22.653	349.087	350.958	350.520	351.158	0.000927	1.98	11.43	9.88	0.59	
Santan South	3568.*	22.653	349.060	350.931	350.494	351.132	0.000929	1.98	11.42	9.88	0.59	
Santan South	3539.5*	22.653	349.036	350.905	350.468	351.105	0.000929	1.98	11.42	9.88	0.59	
Santan South	3511.000	22.653	349.011	350.878	350.444	351.080	0.000934	1.99	11.40	9.87	0.59	
Santan South	3482.5*	22.653	348.984	350.852	350.416	351.053	0.000932	1.99	11.41	9.88	0.59	
Santan South	3454.*	22.653	348.959	350.825	350.392	351.027	0.000936	1.99	11.39	9.87	0.59	
Santan South	3425.5*	22.653	348.932	350.798	350.365	351.000	0.000937	1.99	11.39	9.86	0.59	
Santan South	3397.*	22.653	348.905	350.771	350.339	350.973	0.000939	1.99	11.38	9.86	0.59	
Santan South	3368.5*	22.653	348.880	350.745	350.313	350.947	0.000941	1.99	11.37	9.86	0.59	
Santan South	3340.000	22.653	348.853	350.718	350.285	350.920	0.000939	1.99	11.38	9.86	0.59	
Santan South	3310.62*	22.653	348.831	350.689	350.265	350.894	0.000959	2.01	11.29	9.82	0.60	
Santan South	3281.25*	22.653	348.810	350.660	350.245	350.868	0.000976	2.02	11.21	9.79	0.60	
Santan South	3251.87*	22.653	348.792	350.629	350.224	350.841	0.001002	2.04	11.11	9.75	0.61	
Santan South	3222.5*	22.653	348.770	350.596	350.204	350.812	0.001032	2.06	10.98	9.70	0.62	

TABLE B2
HEC-RAS Output for South Reach of Santan Channel, Design Q = 22.65 cms (800 cfs)

Profile Output Table - Standard Table 1
HEC-RAS Plan: PhII-FIN River: Santan South Reach: Santan South

Reach	River Sta	Q Total (m3/s)	Min Ch El (m)	W.S. Elev (m)	Crit W.S. (m)	E.G. Elev (m)	E.G. Slope (m/m)	Vel Chnl (m/s)	Flow Area (m2)	Top Width (m)	Froude # Chl	
Santan South	3193.12*	22.653	348.749	350.562	350.182	350.783	0.001063	2.09	10.86	9.65	0.63	
Santan South	3163.75*	22.653	348.728	350.526	350.162	350.754	0.001103	2.11	10.72	9.59	0.64	
Santan South	3134.37*	22.653	348.710	350.488	350.142	350.723	0.001151	2.15	10.55	9.52	0.65	
Santan South	3105.000	22.653	348.688	350.440	350.120	350.687	0.001233	2.20	10.28	9.41	0.67	
Santan South	3096.5*	22.653	348.682	350.507	349.915	350.648	0.000597	1.66	13.65	11.20	0.48	
Santan South	3088.000	22.653	348.676	350.536	349.753	350.629	0.000357	1.35	16.77	12.84	0.38	
Santan South	3078.*	22.653	348.667	350.478	350.019	350.620	0.000708	1.67	13.57	12.64	0.51	
Santan South	3068.*	22.653	348.661	350.260	350.092	350.590	0.001821	2.55	8.90	8.80	0.81	
Santan South	3058.000	22.653	348.652	350.234	350.088	350.577	0.001916	2.59	8.73	8.72	0.83	
Santan South	3050.25*	22.653	348.649	350.218	350.074	350.563	0.001931	2.60	8.70	8.69	0.83	
Santan South	3042.51*	22.653	348.642	350.199	350.061	350.549	0.001960	2.62	8.65	8.65	0.84	
Santan South	3034.768	22.653	348.636	350.047	350.047	350.516	0.002914	3.03	7.47	8.09	1.01	b
Santan South	3014.675	22.653	347.981	350.068	349.067	350.286	0.001221	2.07	10.94		0.46	
Santan South	3009.876	22.653	347.975	350.095	349.092	350.251	0.000610	1.75	12.92	6.10	0.38	
Santan South	2999.276	22.653	347.969	350.088	349.086	350.245	0.000610	1.75	12.92	6.10	0.38	
Santan South	2970.52*	22.653	347.944	350.070	349.062	350.226	0.000605	1.75	12.96	6.10	0.38	
Santan South	2941.08*	22.653	347.923	350.053	349.040	350.208	0.000603	1.75	12.98	6.10	0.38	
Santan South	2911.63*	22.653	347.902	350.035	349.019	350.190	0.000600	1.74	13.00	6.10	0.38	
Santan South	2882.19*	22.653	347.877	350.017	348.995	350.171	0.000595	1.74	13.05	6.10	0.38	
Santan South	2852.75*	22.653	347.856	350.000	348.973	350.153	0.000592	1.73	13.07	6.10	0.38	
Santan South	2823.30*	22.653	347.832	349.983	348.949	350.135	0.000587	1.73	13.11	6.10	0.38	
Santan South	2793.86*	22.653	347.810	349.966	348.928	350.117	0.000585	1.72	13.14	6.10	0.37	
Santan South	2764.42*	22.653	347.789	349.948	348.906	350.099	0.000582	1.72	13.16	6.10	0.37	
Santan South	2734.97*	22.653	347.765	349.931	348.882	350.081	0.000577	1.72	13.21	6.10	0.37	
Santan South	2705.53*	22.653	347.743	349.915	348.861	350.064	0.000574	1.71	13.24	6.10	0.37	
Santan South	2676.09*	22.653	347.722	349.898	348.839	350.046	0.000570	1.71	13.26	6.10	0.37	
Santan South	2646.64*	22.653	347.698	349.881	348.815	350.029	0.000565	1.70	13.31	6.10	0.37	
Santan South	2617.20*	22.653	347.676	349.865	348.794	350.011	0.000562	1.70	13.34	6.10	0.37	
Santan South	2587.76*	22.653	347.652	349.848	348.769	349.994	0.000557	1.69	13.39	6.10	0.36	
Santan South	2558.31*	22.653	347.630	349.832	348.748	349.977	0.000554	1.69	13.42	6.10	0.36	

TABLE B2
HEC-RAS Output for South Reach of Santan Channel, Design Q = 22.65 cms (800 cfs)

Profile Output Table - Standard Table 1
HEC-RAS Plan: PhII-FIN River: Santan South Reach: Santan South

Reach	River Sta	Q Total (m3/s)	Min Ch El (m)	W.S. Elev (m)	Crit W.S. (m)	E.G. Elev (m)	E.G. Slope (m/m)	Vel Chnl (m/s)	Flow Area (m2)	Top Width (m)	Froude # Chl
Santan South	2528.87*	22.653	347.609	349.816	348.726	349.960	0.000550	1.68	13.45	6.10	0.36
Santan South	2499.43*	22.653	347.585	349.800	348.702	349.943	0.000545	1.68	13.50	6.10	0.36
Santan South	2469.98*	22.653	347.563	349.784	348.681	349.926	0.000542	1.67	13.53	6.10	0.36
Santan South	2440.54*	22.653	347.542	349.768	348.660	349.910	0.000538	1.67	13.57	6.10	0.36
Santan South	2411.10*	22.653	347.518	349.752	348.635	349.893	0.000533	1.66	13.62	6.10	0.36
Santan South	2381.65*	22.653	347.496	349.737	348.614	349.877	0.000530	1.66	13.66	6.10	0.35
Santan South	2352.21*	22.653	347.472	349.721	348.589	349.860	0.000524	1.65	13.71	6.10	0.35
Santan South	2322.77*	22.653	347.451	349.706	348.568	349.844	0.000521	1.65	13.75	6.10	0.35
Santan South	2293.32*	22.653	347.429	349.691	348.547	349.828	0.000517	1.64	13.78	6.10	0.35
Santan South	2263.88*	22.653	347.405	349.676	348.522	349.812	0.000512	1.64	13.84	6.10	0.35
Santan South	2234.44*	22.653	347.384	349.661	348.501	349.797	0.000508	1.63	13.88	6.10	0.35
Santan South	2205.000	22.653	347.362	349.646	348.480	349.781	0.000504	1.63	13.92	6.10	0.34
Santan South	2176.45*	22.653	347.341	349.632	348.458	349.766	0.000500	1.62	13.97	6.10	0.34
Santan South	2147.90*	22.653	347.320	349.618	348.437	349.751	0.000497	1.62	14.01	6.10	0.34
Santan South	2119.35*	22.653	347.301	349.604	348.419	349.736	0.000494	1.61	14.03	6.10	0.34
Santan South	2090.80*	22.653	347.280	349.590	348.398	349.721	0.000490	1.61	14.08	6.10	0.34
Santan South	2062.261	22.653	347.259	349.576	348.375	349.707	0.000486	1.60	14.12	6.10	0.34
Santan South	2062.161	22.653	347.259	349.581	348.343	349.700	0.000404	1.53	14.81	6.38	0.32
Santan South	2042.181	22.653	347.246	349.590	348.681	349.685	0.000344	1.37	16.54	11.77	0.37
Santan South	2016.15*	22.653	347.231	349.581	348.664	349.676	0.000339	1.36	16.63	11.80	0.37
Santan South	1990.12*	22.653	347.213	349.573	348.647	349.666	0.000333	1.35	16.74	11.84	0.36
Santan South	1964.10*	22.653	347.195	349.565	348.631	349.657	0.000327	1.35	16.84	11.87	0.36
Santan South	1938.07*	22.653	347.179	349.557	348.614	349.648	0.000322	1.34	16.94	11.91	0.36
Santan South	1912.05*	22.653	347.161	349.549	348.595	349.639	0.000316	1.33	17.06	11.95	0.35
Santan South	1886.02*	22.653	347.143	349.542	348.578	349.630	0.000310	1.32	17.19	11.99	0.35
Santan South	1860.000	22.653	347.128	349.534	348.560	349.621	0.000304	1.31	17.30	12.03	0.35
Santan South	1850.*	22.653	347.121	349.530	348.554	349.618	0.000304	1.31	17.32	12.02	0.35
Santan South	1840.000	22.653	347.115	349.527	348.549	349.614	0.000303	1.31	17.33	12.02	0.35
Santan South	1831.25*	22.653	347.109	349.524	348.543	349.611	0.000301	1.30	17.37	12.03	0.35
Santan South	1822.5*	22.653	347.103	349.535	348.535	349.603	0.000263	1.15	19.66	15.09	0.32

TABLE B2
HEC-RAS Output for South Reach of Santan Channel, Design Q = 22.65 cms (800 cfs)

Profile Output Table - Standard Table 1
HEC-RAS Plan: PhII-FIN River: Santan South Reach: Santan South

Reach	River Sta	Q Total (m3/s)	Min Ch El (m)	W.S. Elev (m)	Crit W.S. (m)	E.G. Elev (m)	E.G. Slope (m/m)	Vel Chnl (m/s)	Flow Area (m2)	Top Width (m)	Froude # Chl
Santan South	1813.75*	22.653	347.097	349.544	348.446	349.596	0.000171	1.01	22.41	15.15	0.27
Santan South	1805.000	22.653	347.091	349.550	348.171	349.591	0.000118	0.90	25.12	15.20	0.22
Santan South	1796.*	22.653	347.085	349.531	348.315	349.588	0.000177	1.06	21.33	13.64	0.27
Santan South	1787.000	22.653	347.079	349.498	348.514	349.584	0.000300	1.30	17.39	12.03	0.35
Santan South	1759.16*	22.653	347.061	349.490	348.496	349.575	0.000294	1.29	17.52	12.08	0.34
Santan South	1731.33*	22.653	347.042	349.483	348.477	349.567	0.000288	1.28	17.66	12.13	0.34
Santan South	1703.5*	22.653	347.024	349.475	348.459	349.558	0.000282	1.27	17.81	12.18	0.34
Santan South	1675.66*	22.653	347.006	349.468	348.440	349.550	0.000276	1.26	17.96	12.24	0.33
Santan South	1647.83*	22.653	346.987	349.461	348.422	349.541	0.000270	1.25	18.09	12.28	0.33
Santan South	1620.000	22.653	346.969	349.455	348.403	349.533	0.000264	1.24	18.25	12.34	0.33
Santan South	1590.41*	22.653	346.957	349.447	348.391	349.525	0.000262	1.24	18.30	12.35	0.32
Santan South	1560.82*	22.653	346.945	349.439	348.379	349.517	0.000260	1.23	18.36	12.37	0.32
Santan South	1531.23*	22.653	346.936	349.432	348.368	349.509	0.000258	1.23	18.40	12.39	0.32
Santan South	1501.64*	22.653	346.923	349.424	348.356	349.501	0.000256	1.23	18.46	12.41	0.32
Santan South	1472.05*	22.653	346.911	349.417	348.344	349.493	0.000254	1.22	18.52	12.43	0.32
Santan South	1442.47*	22.653	346.899	349.409	348.332	349.485	0.000252	1.22	18.56	12.43	0.32
Santan South	1412.88*	22.653	346.887	349.402	348.321	349.477	0.000250	1.22	18.61	12.45	0.32
Santan South	1383.29*	22.653	346.875	349.394	348.309	349.469	0.000248	1.21	18.67	12.47	0.32
Santan South	1353.70*	22.653	346.865	349.387	348.298	349.462	0.000247	1.21	18.71	12.49	0.32
Santan South	1324.11*	22.653	346.853	349.380	348.286	349.454	0.000245	1.21	18.78	12.51	0.31
Santan South	1294.52*	22.653	346.841	349.373	348.274	349.446	0.000242	1.20	18.84	12.53	0.31
Santan South	1264.94*	22.653	346.829	349.365	348.261	349.439	0.000240	1.20	18.90	12.55	0.31
Santan South	1235.35*	22.653	346.817	349.358	348.250	349.431	0.000239	1.20	18.95	12.56	0.31
Santan South	1205.76*	22.653	346.805	349.351	348.239	349.424	0.000236	1.19	19.01	12.59	0.31
Santan South	1176.17*	22.653	346.795	349.344	348.227	349.416	0.000235	1.19	19.07	12.61	0.31
Santan South	1146.58*	22.653	346.783	349.338	348.216	349.409	0.000232	1.18	19.14	12.63	0.31
Santan South	1117.000	22.653	346.771	349.331	348.202	349.402	0.000231	1.18	19.19	12.64	0.31
Santan South	1111.5*	22.653	346.768	349.341	348.001	349.389	0.000142	0.98	23.14	14.19	0.24
Santan South	1106.000	22.653	346.765	349.346	347.845	349.382	0.000096	0.84	27.04	15.72	0.20
Santan South	1097.25*	22.653	346.762	349.337	348.109	349.380	0.000134	0.93	24.44	15.70	0.24

TABLE B2
HEC-RAS Output for South Reach of Santan Channel, Design Q = 22.65 cms (800 cfs)

Profile Output Table - Standard Table 1
HEC-RAS Plan: PhII-FIN River: Santan South Reach: Santan South

Reach	River Sta	Q Total (m3/s)	Min Ch El (m)	W.S. Elev (m)	Crit W.S. (m)	E.G. Elev (m)	E.G. Slope (m/m)	Vel Chnl (m/s)	Flow Area (m2)	Top Width (m)	Froude # Chl
Santan South	1088.5*	22.653	346.759	349.323	348.192	349.378	0.000197	1.04	21.76	15.65	0.28
Santan South	1079.75*	22.653	346.756	349.303	348.188	349.375	0.000236	1.19	19.04	12.59	0.31
Santan South	1071.000	22.653	346.753	349.301	348.185	349.373	0.000235	1.19	19.04	12.59	0.31
Santan South	1062.37*	22.653	346.750	349.299	348.182	349.371	0.000235	1.19	19.06	12.60	0.31
Santan South	1053.75*	22.653	346.744	349.297	348.177	349.368	0.000234	1.19	19.09	12.60	0.31
Santan South	1045.12*	22.653	346.740	349.295	348.175	349.366	0.000234	1.19	19.10	12.61	0.31
Santan South	1036.500	22.653	346.737	349.293	348.171	349.364	0.000233	1.19	19.11	12.61	0.31
Santan South	1016.500	22.653	346.731	349.249	347.816	349.351	0.000213	1.41	16.06	6.38	0.28
Santan South	1016.000	Culvert									
Santan South	1000.000	22.653	346.701	349.161	347.784	349.267	0.000228	1.44	15.68	6.38	0.29

c

Notes: * HEC-RAS Interpolated Cross Section
a) Station 3833.892, WSEL = 351.86 m as provided by HDR per HY8 analysis of box culvert
b) Station 3034.768, critical depth at drop upstream of CBC5
c) Station 1000.000, Starting WSEL = 349.16 m

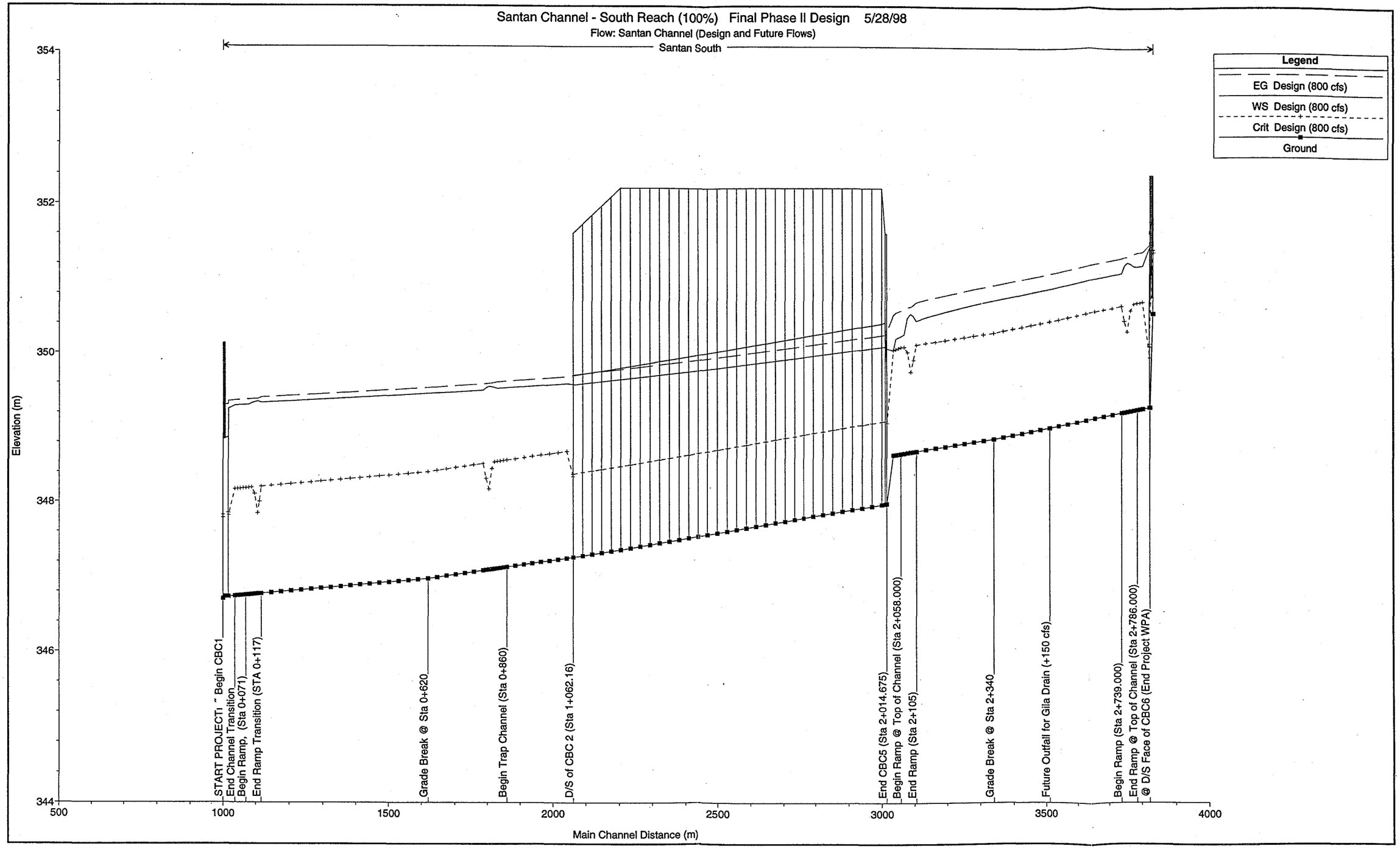
Santan Channel - South Reach (100%) Final Phase II Design 5/28/98
Flow: Santan Channel (Design and Future Flows)
Santan South
Legend
EG Design (800 cfs)
WS Design (800 cfs)
Crit Design (800 cfs)
Ground
Elevation (m)
354
352
350
348
346
344
500
1000
1500
2000
2500
3000
3500
4000
Main Channel Distance (m)
START PROJECT1 ~ Begin CBC1
End Channel Transition
Begin Ramp, (Sta 0+071)
End Ramp Transition (STA 0+117)
Grade Break @ Sta 0+620
Begin Trap Channel (Sta 0+860)
D/S of CBC 2 (Sta 1+062.16)
End CBC5 (Sta 2+014.675)
Begin Ramp @ Top of Channel (Sta 2+058.000)
End Ramp (Sta 2+105)
Grade Break @ Sta 2+340
Future Outfall for Gila Drain (+150 cfs)
Begin Ramp (Sta 2+739.000)
End Ramp @ Top of Channel (Sta 2+786.000)
@ D/S Face of CBC6 (End Project WPA)

TABLE B3
HEC-RAS Output for South Reach of Santan Channel, Future Q = 26.90 cms (950 cfs)

Profile Output Table - Standard Table 1
HEC-RAS Plan: PhII-FIN River: Santan South Reach: Santan South

Reach	River Sta	Q Total (m3/s)	Min Ch El (m)	W.S. Elev (m)	Crit W.S. (m)	E.G. Elev (m)	E.G. Slope (m/m)	Vel Chnl (m/s)	Flow Area (m2)	Top Width (m)	Froude # Chl	
Santan South	3833.892	22.653	350.550	351.860	351.370	352.004	0.000827	1.82	12.47	9.70	0.51	a
Santan South	3833.000	Culvert										
Santan South	3822.742	22.653	349.289	351.510	350.108	351.566	0.000161	1.05	21.55	9.70	0.23	
Santan South	3822.642	22.653	349.289	351.515	349.959	351.546	0.000078	0.78	29.18	13.11	0.17	
Santan South	3802.422	22.653	349.270	351.324	350.705	351.472	0.000617	1.70	13.30	10.61	0.49	
Santan South	3794.21*	22.653	349.264	351.320	350.697	351.467	0.000614	1.70	13.32	10.62	0.48	
Santan South	3786.000	22.653	349.258	351.314	350.691	351.461	0.000612	1.70	13.34	10.62	0.48	
Santan South	3776.*	22.653	349.249	351.323	350.680	351.447	0.000634	1.56	14.50	13.70	0.48	
Santan South	3766.*	22.653	349.237	351.346	350.590	351.431	0.000343	1.29	17.50	13.83	0.37	
Santan South	3756.000	22.653	349.228	351.358	350.308	351.421	0.000209	1.11	20.36	13.92	0.29	
Santan South	3747.5*	22.653	349.222	351.326	350.450	351.417	0.000332	1.34	16.94	12.32	0.36	
Santan South	3739.000	22.653	349.215	351.257	350.648	351.407	0.000632	1.72	13.18	10.57	0.49	
Santan South	3710.5*	22.653	349.188	351.240	350.620	351.388	0.000617	1.70	13.30	10.61	0.49	
Santan South	3682.*	22.653	349.164	351.223	350.596	351.369	0.000609	1.69	13.37	10.64	0.48	
Santan South	3653.5*	22.653	349.139	351.206	350.571	351.350	0.000598	1.68	13.45	10.68	0.48	
Santan South	3625.*	22.653	349.112	351.190	350.545	351.332	0.000585	1.67	13.57	10.71	0.47	
Santan South	3596.5*	22.653	349.087	351.174	350.520	351.314	0.000575	1.66	13.65	10.74	0.47	
Santan South	3568.*	22.653	349.060	351.159	350.495	351.296	0.000561	1.64	13.77	10.79	0.46	
Santan South	3539.5*	22.653	349.036	351.143	350.466	351.279	0.000549	1.63	13.89	10.83	0.46	
Santan South	3511.000	26.901	349.011	351.029	350.572	351.249	0.000938	2.08	12.93	10.48	0.60	b
Santan South	3482.5*	26.901	348.984	351.002	350.545	351.223	0.000936	2.08	12.94	10.48	0.60	
Santan South	3454.*	26.901	348.959	350.976	350.521	351.197	0.000941	2.08	12.92	10.47	0.60	
Santan South	3425.5*	26.901	348.932	350.949	350.493	351.170	0.000941	2.08	12.91	10.46	0.60	
Santan South	3397.*	26.901	348.905	350.921	350.468	351.143	0.000944	2.08	12.90	10.46	0.60	
Santan South	3368.5*	26.901	348.880	350.895	350.442	351.116	0.000945	2.09	12.89	10.46	0.60	
Santan South	3340.000	26.901	348.853	350.868	350.414	351.089	0.000944	2.09	12.90	10.46	0.60	
Santan South	3310.62*	26.901	348.831	350.839	350.394	351.064	0.000964	2.10	12.80	10.42	0.61	
Santan South	3281.25*	26.901	348.810	350.810	350.374	351.038	0.000980	2.11	12.72	10.39	0.61	
Santan South	3251.87*	26.901	348.792	350.778	350.353	351.010	0.001004	2.13	12.61	10.35	0.62	
Santan South	3222.5*	26.901	348.770	350.745	350.333	350.982	0.001032	2.16	12.48	10.29	0.63	

TABLE B3
HEC-RAS Output for South Reach of Santan Channel, Future Q = 26.90 cms (950 cfs)

Profile Output Table - Standard Table 1
HEC-RAS Plan: PhII-FIN River: Santan South Reach: Santan South

Reach	River Sta	Q Total (m3/s)	Min Ch El (m)	W.S. Elev (m)	Crit W.S. (m)	E.G. Elev (m)	E.G. Slope (m/m)	Vel Chnl (m/s)	Flow Area (m2)	Top Width (m)	Froude # Chl	
Santan South	3193.12*	26.901	348.749	350.711	350.310	350.953	0.001061	2.18	12.35	10.25	0.63	
Santan South	3163.75*	26.901	348.728	350.676	350.291	350.923	0.001098	2.21	12.19	10.19	0.64	
Santan South	3134.37*	26.901	348.710	350.638	350.271	350.893	0.001142	2.24	12.02	10.12	0.66	
Santan South	3105.000	26.901	348.688	350.590	350.249	350.857	0.001216	2.29	11.74	10.01	0.68	
Santan South	3096.5*	26.901	348.682	350.661	350.035	350.816	0.000603	1.74	15.43	11.82	0.49	
Santan South	3088.000	26.901	348.676	350.693	349.864	350.797	0.000366	1.43	18.83	13.47	0.39	
Santan South	3078.*	26.901	348.667	350.637	350.120	350.788	0.000668	1.72	15.63	13.28	0.51	
Santan South	3068.*	26.901	348.661	350.401	350.222	350.757	0.001787	2.64	10.18	9.36	0.81	
Santan South	3058.000	26.901	348.652	350.375	350.217	350.744	0.001870	2.69	10.01	9.29	0.83	
Santan South	3050.25*	26.901	348.649	350.359	350.204	350.730	0.001887	2.70	9.97	9.25	0.83	
Santan South	3042.51*	26.901	348.642	350.337	350.190	350.715	0.001929	2.72	9.88	9.20	0.84	
Santan South	3034.768	26.901	348.636	350.199	350.176	350.681	0.002683	3.08	8.74	8.69	0.98	c
Santan South	3014.675	26.901	347.981	350.244	349.199	350.552	0.001721	2.46	10.94		0.52	
Santan South	3009.876	26.901	347.975	350.301	349.228	350.484	0.000679	1.90	14.18	6.10	0.40	
Santan South	2999.276	26.901	347.969	350.294	349.222	350.477	0.000680	1.90	14.17	6.10	0.40	
Santan South	2970.52*	26.901	347.944	350.274	349.198	350.457	0.000676	1.89	14.20	6.10	0.40	
Santan South	2941.08*	26.901	347.923	350.254	349.176	350.437	0.000675	1.89	14.21	6.10	0.40	
Santan South	2911.63*	26.901	347.902	350.234	349.155	350.417	0.000674	1.89	14.22	6.10	0.40	
Santan South	2882.19*	26.901	347.877	350.215	349.130	350.396	0.000671	1.89	14.25	6.10	0.39	
Santan South	2852.75*	26.901	347.856	350.195	349.109	350.376	0.000670	1.89	14.26	6.10	0.39	
Santan South	2823.30*	26.901	347.832	350.175	349.085	350.356	0.000666	1.88	14.29	6.10	0.39	
Santan South	2793.86*	26.901	347.810	350.156	349.063	350.336	0.000665	1.88	14.30	6.10	0.39	
Santan South	2764.42*	26.901	347.789	350.136	349.042	350.316	0.000664	1.88	14.31	6.10	0.39	
Santan South	2734.97*	26.901	347.765	350.117	349.018	350.296	0.000660	1.88	14.34	6.10	0.39	
Santan South	2705.53*	26.901	347.743	350.097	348.996	350.276	0.000659	1.87	14.35	6.10	0.39	
Santan South	2676.09*	26.901	347.722	350.078	348.975	350.257	0.000657	1.87	14.36	6.10	0.39	
Santan South	2646.64*	26.901	347.698	350.059	348.951	350.237	0.000654	1.87	14.39	6.10	0.39	
Santan South	2617.20*	26.901	347.676	350.040	348.929	350.217	0.000652	1.87	14.41	6.10	0.39	
Santan South	2587.76*	26.901	347.652	350.021	348.905	350.197	0.000649	1.86	14.44	6.10	0.39	
Santan South	2558.31*	26.901	347.630	350.001	348.884	350.178	0.000647	1.86	14.45	6.10	0.39	

TABLE B3
HEC-RAS Output for South Reach of Santan Channel, Future Q = 26.90 cms (950 cfs)

Profile Output Table - Standard Table 1
HEC-RAS Plan: PhII-FIN River: Santan South Reach: Santan South

Reach	River Sta	Q Total (m3/s)	Min Ch El (m)	W.S. Elev (m)	Crit W.S. (m)	E.G. Elev (m)	E.G. Slope (m/m)	Vel Chnl (m/s)	Flow Area (m2)	Top Width (m)	Froude # Chl
Santan South	2528.87*	26.901	347.609	349.983	348.862	350.159	0.000645	1.86	14.47	6.10	0.39
Santan South	2499.43*	26.901	347.585	349.964	348.838	350.139	0.000642	1.86	14.50	6.10	0.38
Santan South	2469.98*	26.901	347.563	349.945	348.817	350.120	0.000640	1.85	14.52	6.10	0.38
Santan South	2440.54*	26.901	347.542	349.926	348.795	350.101	0.000638	1.85	14.53	6.10	0.38
Santan South	2411.10*	26.901	347.518	349.907	348.771	350.081	0.000634	1.85	14.57	6.10	0.38
Santan South	2381.65*	26.901	347.496	349.889	348.749	350.062	0.000633	1.84	14.58	6.10	0.38
Santan South	2352.21*	26.901	347.472	349.870	348.725	350.043	0.000629	1.84	14.62	6.10	0.38
Santan South	2322.77*	26.901	347.451	349.852	348.704	350.024	0.000627	1.84	14.64	6.10	0.38
Santan South	2293.32*	26.901	347.429	349.833	348.682	350.005	0.000625	1.84	14.66	6.10	0.38
Santan South	2263.88*	26.901	347.405	349.815	348.658	349.986	0.000621	1.83	14.69	6.10	0.38
Santan South	2234.44*	26.901	347.384	349.797	348.637	349.967	0.000619	1.83	14.71	6.10	0.38
Santan South	2205.000	26.901	347.362	349.779	348.615	349.949	0.000617	1.83	14.73	6.10	0.37
Santan South	2176.45*	26.901	347.341	349.761	348.594	349.931	0.000614	1.82	14.75	6.10	0.37
Santan South	2147.90*	26.901	347.320	349.744	348.573	349.913	0.000612	1.82	14.78	6.10	0.37
Santan South	2119.35*	26.901	347.301	349.726	348.554	349.895	0.000611	1.82	14.78	6.10	0.37
Santan South	2090.80*	26.901	347.280	349.709	348.533	349.877	0.000609	1.82	14.81	6.10	0.37
Santan South	2062.261	26.901	347.259	349.692	348.510	349.859	0.000606	1.81	14.83	6.10	0.37
Santan South	2062.161	26.901	347.259	349.699	348.474	349.851	0.000497	1.73	15.56	6.38	0.35
Santan South	2042.181	26.901	347.246	349.718	348.810	349.831	0.000382	1.49	18.07	12.28	0.39
Santan South	2016.15*	26.901	347.231	349.708	348.794	349.820	0.000377	1.48	18.16	12.31	0.39
Santan South	1990.12*	26.901	347.213	349.698	348.776	349.809	0.000372	1.47	18.25	12.34	0.39
Santan South	1964.10*	26.901	347.195	349.688	348.759	349.798	0.000367	1.47	18.34	12.37	0.38
Santan South	1938.07*	26.901	347.179	349.679	348.743	349.788	0.000363	1.46	18.42	12.40	0.38
Santan South	1912.05*	26.901	347.161	349.670	348.725	349.777	0.000357	1.45	18.53	12.43	0.38
Santan South	1886.02*	26.901	347.143	349.661	348.707	349.767	0.000351	1.44	18.66	12.47	0.38
Santan South	1860.000	26.901	347.128	349.652	348.689	349.757	0.000346	1.43	18.76	12.50	0.37
Santan South	1850.*	26.901	347.121	349.649	348.684	349.753	0.000345	1.43	18.76	12.49	0.37
Santan South	1840.000	26.901	347.115	349.645	348.678	349.750	0.000345	1.43	18.77	12.49	0.37
Santan South	1831.25*	26.901	347.109	349.642	348.673	349.746	0.000343	1.43	18.81	12.50	0.37
Santan South	1822.5*	26.901	347.103	349.656	348.665	349.735	0.000287	1.25	21.51	15.57	0.34

TABLE B3
HEC-RAS Output for South Reach of Santan Channel, Future Q = 26.90 cms (950 cfs)

Profile Output Table - Standard Table 1
HEC-RAS Plan: PhII-FIN River: Santan South Reach: Santan South

Reach	River Sta	Q Total (m3/s)	Min Ch El (m)	W.S. Elev (m)	Crit W.S. (m)	E.G. Elev (m)	E.G. Slope (m/m)	Vel Chnl (m/s)	Flow Area (m2)	Top Width (m)	Froude # Chl
Santan South	1813.75*	26.901	347.097	349.665	348.547	349.728	0.000193	1.11	24.28	15.63	0.28
Santan South	1805.000	26.901	347.091	349.672	348.281	349.723	0.000136	1.00	27.01	15.68	0.24
Santan South	1796.*	26.901	347.085	349.650	348.439	349.719	0.000204	1.17	22.98	14.12	0.29
Santan South	1787.000	26.901	347.079	349.609	348.643	349.714	0.000345	1.43	18.75	12.48	0.37
Santan South	1759.16*	26.901	347.061	349.599	348.625	349.703	0.000340	1.43	18.86	12.51	0.37
Santan South	1731.33*	26.901	347.042	349.590	348.607	349.692	0.000334	1.42	18.99	12.56	0.37
Santan South	1703.5*	26.901	347.024	349.582	348.588	349.682	0.000328	1.41	19.12	12.61	0.36
Santan South	1675.66*	26.901	347.006	349.573	348.569	349.673	0.000322	1.40	19.26	12.65	0.36
Santan South	1647.83*	26.901	346.987	349.565	348.551	349.663	0.000316	1.39	19.39	12.69	0.36
Santan South	1620.000	26.901	346.969	349.557	348.532	349.654	0.000310	1.38	19.53	12.75	0.36
Santan South	1590.41*	26.901	346.957	349.548	348.520	349.644	0.000309	1.37	19.57	12.76	0.35
Santan South	1560.82*	26.901	346.945	349.539	348.508	349.635	0.000307	1.37	19.61	12.77	0.35
Santan South	1531.23*	26.901	346.936	349.530	348.497	349.626	0.000306	1.37	19.64	12.78	0.35
Santan South	1501.64*	26.901	346.923	349.521	348.485	349.616	0.000304	1.37	19.68	12.79	0.35
Santan South	1472.05*	26.901	346.911	349.512	348.473	349.607	0.000302	1.36	19.72	12.81	0.35
Santan South	1442.47*	26.901	346.899	349.503	348.461	349.597	0.000301	1.36	19.74	12.81	0.35
Santan South	1412.88*	26.901	346.887	349.494	348.449	349.588	0.000300	1.36	19.78	12.82	0.35
Santan South	1383.29*	26.901	346.875	349.485	348.438	349.579	0.000298	1.36	19.82	12.83	0.35
Santan South	1353.70*	26.901	346.865	349.476	348.427	349.570	0.000297	1.36	19.85	12.85	0.35
Santan South	1324.11*	26.901	346.853	349.468	348.415	349.561	0.000295	1.35	19.89	12.86	0.35
Santan South	1294.52*	26.901	346.841	349.459	348.402	349.552	0.000294	1.35	19.94	12.87	0.35
Santan South	1264.94*	26.901	346.829	349.450	348.390	349.543	0.000292	1.35	19.98	12.89	0.35
Santan South	1235.35*	26.901	346.817	349.442	348.379	349.534	0.000291	1.34	20.01	12.90	0.34
Santan South	1205.76*	26.901	346.805	349.433	348.368	349.525	0.000289	1.34	20.06	12.91	0.34
Santan South	1176.17*	26.901	346.795	349.425	348.357	349.516	0.000288	1.34	20.09	12.93	0.34
Santan South	1146.58*	26.901	346.783	349.416	348.345	349.507	0.000286	1.34	20.14	12.94	0.34
Santan South	1117.000	26.901	346.771	349.408	348.332	349.498	0.000284	1.33	20.18	12.95	0.34
Santan South	1111.5*	26.901	346.768	349.420	348.121	349.483	0.000176	1.11	24.28	14.51	0.27
Santan South	1106.000	26.901	346.765	349.428	347.955	349.474	0.000120	0.95	28.33	16.05	0.23
Santan South	1097.25*	26.901	346.762	349.416	348.210	349.472	0.000165	1.05	25.70	16.01	0.26

TABLE B3
HEC-RAS Output for South Reach of Santan Channel, Future Q = 26.90 cms (950 cfs)

Profile Output Table - Standard Table 1
HEC-RAS Plan: PhII-FIN River: Santan South Reach: Santan South

Reach	River Sta	Q Total (m3/s)	Min Ch El (m)	W.S. Elev (m)	Crit W.S. (m)	E.G. Elev (m)	E.G. Slope (m/m)	Vel Chnl (m/s)	Flow Area (m2)	Top Width (m)	Froude # Chl
Santan South	1088.5*	26.901	346.759	349.399	348.321	349.469	0.000239	1.17	22.96	15.96	0.31
Santan South	1079.75*	26.901	346.756	349.374	348.317	349.465	0.000369	1.34	20.11	15.87	0.38
Santan South	1071.000	26.901	346.753	349.369	348.314	349.462	0.000294	1.35	19.92	12.87	0.35
Santan South	1062.37*	26.901	346.750	349.367	348.311	349.460	0.000294	1.35	19.92	12.87	0.35
Santan South	1053.75*	26.901	346.744	349.364	348.306	349.457	0.000293	1.35	19.95	12.87	0.35
Santan South	1045.12*	26.901	346.740	349.362	348.304	349.454	0.000293	1.35	19.95	12.88	0.35
Santan South	1036.500	26.901	346.737	349.359	348.299	349.452	0.000293	1.35	19.96	12.88	0.35
Santan South	1016.500	26.901	346.731	349.294	347.947	349.432	0.000287	1.65	16.34	6.38	0.33
Santan South	1016.000	Culvert									
Santan South	1000.000	26.901	346.701	349.161	347.917	349.310	0.000321	1.72	15.68	6.38	0.35 d

Notes: * HEC-RAS Interpolated Cross Section
a) Station 3833.892, WSEL = 351.86 m as provided by HDR per HY8 analysis of box culvert
b) Station 3511.000, possible Gila Drain outfall; Future Q = 26.90 cms (950 cfs)
c) Station 3034.768, critical depth at drop upstream of CBC5
d) Station 1000.000, Starting WSEL = 349.16 m

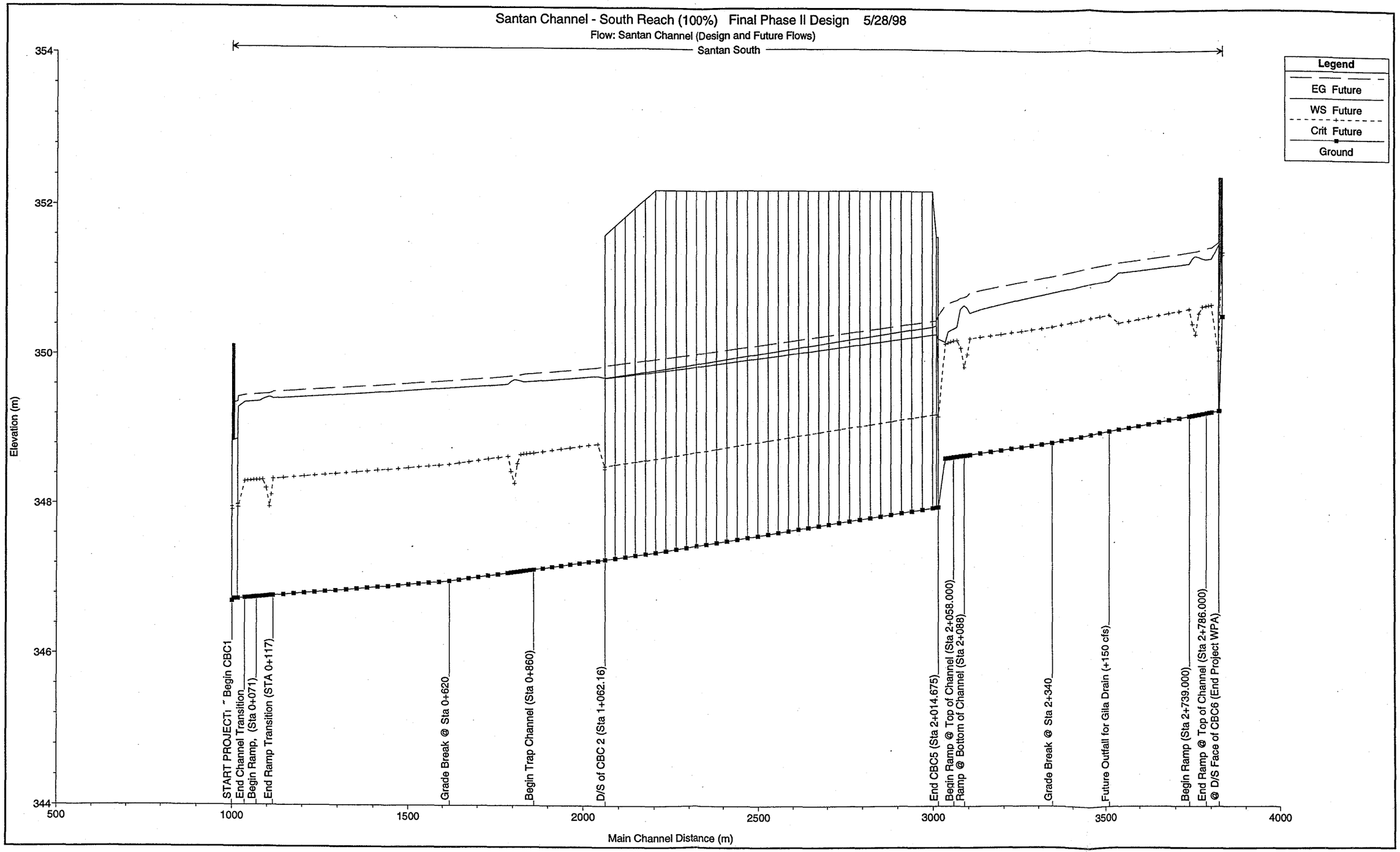
Santan Channel - South Reach (100%) Final Phase II Design 5/28/98
Flow: Santan Channel (Design and Future Flows)
Santan South
Legend
EG Future
WS Future
Crit Future
Ground
Elevation (m)
354
352
350
348
346
344
500
1000
1500
2000
2500
3000
3500
4000
Main Channel Distance (m)
START PROJECT1 ~ Begin CBC1
End Channel Transition
Begin Ramp, (Sta 0+071)
End Ramp Transition (STA 0+117)
Grade Break @ Sta 0+620
Begin Trap Channel (Sta 0+860)
D/S of CBC 2 (Sta 1+062.16)
End CBC5 (Sta 2+014.675)
Begin Ramp @ Top of Channel (Sta 2+058.000)
Ramp @ Bottom of Channel (Sta 2+088)
Grade Break @ Sta 2+340
Future Outfall for Gila Drain (+150 cfs)
Begin Ramp (Sta 2+739.000)
End Ramp @ Top of Channel (Sta 2+786.000)
@ D/S Face of CBC6 (End Project WPA)

TABLE B4
Summary of Freeboard Considerations for Santan Channel

Project: ADOT: Santan Channel Project - Phase II
River Reach: Gila Drain to Santan Channel (South Reach)
Date: 28-MAY-98

Stationing, in meters		Channel Elevation, m		W. S. Elevation, m		Froude Number		Super Elevation, m		Required Fb, m		Available Freeboard, m			Background DATA: Velocity, m/s		Radius	Top Width W, m		Super Coef. C		Rc/W	
HEC-RAS	Plan Set	Invert	Top Bank	Design Q	Future Q	Design Q	Future Q	Design Q	Future Q	Design Q	Future Q	Design Q	Future Q		Design Q	Future Q	Rc, m	Design Q	Future Q	Design Q	Future Q	Design Q	Future Q
1000	0+000.000	346.700	350.130	349.16	349.16	0.29	0.35	0.013	0.019	0.300	0.300	0.957	0.951		1.44	1.72	50.05	6.38	6.38	0.5	0.5	7.84	7.84
1016.5	0+016.500	346.730	350.138	349.25	349.29	0.28	0.33	0.013	0.018	0.300	0.300	0.875	0.830		1.41	1.65	50.05	6.38	6.38	0.5	0.5	7.84	7.84
1036.5	0+036.500	346.738	350.138	349.29	349.36	0.31	0.35	0.018	0.024	0.300	0.300	0.830	0.754		1.19	1.35	50.05	12.61	12.88	0.5	0.5	3.97	3.89
1071	0+071.000	346.752	350.150	349.30	349.37	0.31	0.35	0.018	0.024	0.300	0.300	0.832	0.756		1.19	1.35	50.05	12.59	12.87	0.5	0.5	3.98	3.89
1106	0+106.000	346.766	350.164	349.35	349.43	0.20	0.23	0.011	0.015	0.300	0.300	0.803	0.719		0.84	0.95	50.05	15.72	16.05	0.5	0.5	3.18	3.12
1117	0+117.000	346.770	350.168	349.33	349.41	0.31	0.34	0.018	0.023	0.300	0.300	0.820	0.735		1.18	1.33	50.05	12.64	12.95	0.5	0.5	3.96	3.86
1620	0+620.000	346.970	350.370	349.45	349.56	0.33	0.36	0	0	0.300	0.300	0.920	0.810		1.24	1.38	none	12.34	12.75	0.5	0.5	--	--
1787	0+787.000	347.080	350.493	349.50	349.61	0.35	0.37	0	0	0.300	0.300	0.993	0.883		1.3	1.43	none	12.03	12.48	0.5	0.5	--	--
1805	0+805.000	347.091	350.504	349.55	349.67	0.22	0.24	0	0	0.300	0.300	0.954	0.834		0.9	1	none	15.2	15.68	0.5	0.5	--	--
1840	0+840.000	347.114	350.527	349.53	349.64	0.35	0.37	0	0	0.000	0.000	0.997	0.887		1.31	1.43	none	12.02	12.49	0.5	0.5	--	--
1860	0+860.000	347.127	350.527	349.53	349.65	0.35	0.37	0	0	0.300	0.300	0.997	0.877		1.31	1.43	none	12.03	12.5	0.5	0.5	--	--
2042.181	1+042.181	347.247	351.447	349.59	349.72	0.37	0.39	0	0	0.300	0.300	1.857	1.727		1.37	1.49	none	11.77	12.28	0.5	0.5	--	--
2062.161	1+062.161	347.260	350.660	349.58	349.70	0.32	0.35	0	0	0.300	0.300	1.080	0.960		1.53	1.73	none	6.38	6.38	0.5	0.5	--	--
2062.261	1+062.261	347.260	350.879	349.58	349.69	0.34	0.37	0	0	0.300	0.300	1.299	1.189		1.6	1.81	none	6.1	6.1	0.5	0.5	--	--
2205	1+205.000	347.361	351.054	349.65	349.78	0.34	0.37	0	0	0.300	0.300	1.404	1.274		1.63	1.83	none	6.1	6.1	0.5	0.5	--	--
2999.276	1+999.276	347.968	351.054	350.09	350.29	0.38	0.40	0	0	0.300	0.300	0.964	0.764		1.75	1.9	none	6.1	6.1	0.5	0.5	--	--
3009.876	2+009.876	347.976	351.599	350.09	350.30	0.38	0.40	0	0	0.300	0.300	1.509	1.299		1.75	1.9	none	6.1	6.1	0.5	0.5	--	--
3014.675	2+014.675	347.980	351.237	350.07	350.24	0.46	0.52	0	0	0.300	0.300	1.167	0.997		2.07	2.46	none	7	7	0.5	0.5	--	--
3034.768	2+034.768	348.637	351.237	350.05	350.20	1.01	0.98	0	0	0.376	0.409	1.187	1.037	a	3.03	3.08	none	8.09	8.69	1	1	--	--
3058	2+058.000	348.653	351.258	350.23	350.38	0.83	0.83	0	0	0.300	0.300	1.028	0.878		2.59	2.69	none	8.72	9.29	0.5	0.5	--	--
3088	2+088.000	348.675	351.278	350.54	350.69	0.38	0.39	0	0	0.300	0.300	0.738	0.588		1.35	1.43	none	12.84	13.47	0.5	0.5	--	--
3105	2+105.000	248.687	351.290	350.44	350.59	0.67	0.68	0	0	0.300	0.300	0.850	0.700		2.2	2.29	none	9.41	10.01	0.5	0.5	--	--
3340	2+340.000	348.853	351.453	350.72	350.87	0.59	0.60	0	0	0.300	0.300	0.733	0.583		1.99	2.09	none	9.86	10.46	0.5	0.5	--	--
3511	2+511.000	349.010	351.608	350.88	351.03	0.59	0.60	0.038	0.044	0.300	0.300	0.690	0.534		1.98	2.08	52.05	9.88	10.48	0.5	0.5	5.27	4.97
3539.5 *	2+539.500	349.030	351.634	350.90	351.14	0.59	0.46	0.038	0.028	0.300	0.300	0.696	0.466		1.98	1.63	52.05	9.89	10.83	0.5	0.5	5.26	4.81
3568 *	2+568.000	349.060	351.660	350.93	351.16	0.59	0.46	0.038	0.028	0.300	0.300	0.692	0.472		1.98	1.64	52.05	9.89	10.79	0.5	0.5	5.26	4.82
3739	2+739.000	349.214	351.815	351.09	351.26	0.59	0.49	0	0	0.300	0.300	0.725	0.555		1.98	1.72	none	9.9	10.57	0.5	0.5	--	--
3756	2+756.000	349.229	351.831	351.23	351.36	0.33	0.29	0	0	0.300	0.300	0.601	0.471		1.21	1.11	none	13.42	13.92	0.5	0.5	--	--
3786	2+786.000	349.257	351.857	351.18	351.31	0.56	0.48	0	0	0.300	0.300	0.677	0.547		1.9	1.7	none	10.08	10.62	0.5	0.5	--	--
3802.422	2+802.422	349.271	351.871	351.19	351.32	0.56	0.49	0	0	0.300	0.300	0.681	0.551		1.9	1.7	none	10.08	10.61	0.5	0.5	--	--
3822.742	2+822.742	349.290	352.~~690~~ 871	351.43	351.51	0.24	0.23	0	0	0.300	0.300	~~1.260~~ 1.44	1.~~180~~ 1.36		1.09	1.05	none	9.7	9.7	0.5	0.5	--	--
3833.892	2+833.892	350.550	352.~~570~~ 569	351.86	351.86	0.52	0.52	0	0	0.300	0.300	~~0.710~~ 0.709	~~0.710~~ <0.709	b	1.82	1.82	none	9.7	9.7	0.5	0.5	--	--

Note: * HEC-RAS Interpolated Cross Section
a) HEC-RAS Station 3034.768, critical depth at drop upstream of CBC5
b) HEC-RAS Station 3833.892, WSEL = 351.86 m as provided by HDR per HY8 analysis of box culvert

APPENDIX C

Hydrologic Analyses of First Flush Flow Using HEC-1

(From *"Initial Drainage Report, Santan Freeway, 56th Street to Price and Gila Drain Floodway to Basin B"*, Wood, Patel & Associates, Inc., September 12, 1996)

```
FLOOD HYDROGRAPH PACKAGE  (HEC-1)
          JUN 09 1992
          VERSION 4.0.3E

RUN DATE  09/13/96  TIME  08:39:36
```


U.S. ARMY CORPS OF ENGINEERS
HYDROLOGIC ENGINEERING CENTER
609 SECOND STREET
DAVIS, CALIFORNIA 95616
(916) 551-1748


```
X     X  XXXXXXX   XXXXX          X
X     X  X        X     X        XX
X     X  X        X              X
XXXXXXX  XXXX     X       XXXXX  X
X     X  X        X              X
X     X  X        X     X        X
X     X  XXXXXXX   XXXXX         XXX
```

THIS PROGRAM REPLACES ALL PREVIOUS VERSIONS OF HEC-1 KNOWN AS HEC1 (JAN 73), HEC1GS, HEC1DB, AND HEC1KW.

THE DEFINITIONS OF VARIABLES -RTIMP- AND -RTIOR- HAVE CHANGED FROM THOSE USED WITH THE 1973-STYLE INPUT STRUCTURE.
THE DEFINITION OF -AMSKK- ON RM-CARD WAS CHANGED WITH REVISIONS DATED 28 SEP 81. THIS IS THE FORTRAN77 VERSION
NEW OPTIONS: DAMBREAK OUTFLOW SUBMERGENCE , SINGLE EVENT DAMAGE CALCULATION, DSS:WRITE STAGE FREQUENCY,
DSS:READ TIME SERIES AT DESIRED CALCULATION INTERVAL LOSS RATE:GREEN AND AMPT INFILTRATION
KINEMATIC WAVE: NEW FINITE DIFFERENCE ALGORITHM

```
LINE          ID.......1.......2.......3.......4.......5.......6.......7.......8.......9......10

  1           ID        SANTAN CHANNEL DESIGN
  2           ID        DMJM-WOOD PATEL -- 9/12/96
  3           ID        HYPOTHETICAL ANALYSIS TO DETERMINE FIRST FLUSH VOLUME CREATED
  4           ID        BY THE EFFECTIVE WATERSHED
  5           ID        FILENAME: FRSTFLSH.DAT
  6           IT       5                    289
  7           IO       1       0       0
              *DIAGRAM

  8           KK   FIRST FLUSH
  9           KM    SUB1
 10           BA   1.825
 11           PH      1   1.825    0.29    0.53    0.86    0.94    1.00    1.11    1.23    1.34
 12           LG   0.35    0.30    10.8    0.04    0.00
 13           UC   3.50    2.54
 14           ZZ
```

SCHEMATIC DIAGRAM OF STREAM NETWORK

INPUT LINE

(V) ROUTING (---->) DIVERSION OR PUMP FLOW

(.) CONNECTOR (<----) RETURN OF DIVERTED OR PUMPED FLOW

8 FIRST

(***) RUNOFF ALSO COMPUTED AT THIS LOCATION

```
*************************************
*                                   *
*  FLOOD HYDROGRAPH PACKAGE  (HEC-1)*
*            JUN 09 1992            *
*          VERSION 4.0.3E           *
*                                   *
*  RUN DATE  09/13/96  TIME  08:39:36*
*                                   *
*************************************
```

```
*************************************
*                                   *
*   U.S. ARMY CORPS OF ENGINEERS    *
*   HYDROLOGIC ENGINEERING CENTER   *
*         609 SECOND STREET         *
*      DAVIS, CALIFORNIA 95616      *
*          (916) 551-1748           *
*                                   *
*************************************
```

```
                    SANTAN CHANNEL DESIGN
                    DMJM-WOOD PATEL -- 9/12/96
                    HYPOTHETICAL ANALYSIS TO DETERMINE FIRST FLUSH VOLUME CREATED
                    BY THE EFFECTIVE WATERSHED
                    FILENAME: FRSTFLSH.DAT

 7 IO        OUTPUT CONTROL VARIABLES
                 IPRNT          1  PRINT CONTROL
                 IPLOT          0  PLOT CONTROL
                 QSCAL         0.  HYDROGRAPH PLOT SCALE

 IT          HYDROGRAPH TIME DATA
                  NMIN          5  MINUTES IN COMPUTATION INTERVAL
                 IDATE      1   0. STARTING DATE
                 ITIME       0000  STARTING TIME
                    NQ        289  NUMBER OF HYDROGRAPH ORDINATES
                NDDATE      2   0  ENDING DATE
                NDTIME       0000  ENDING TIME
                 ICENT         19  CENTURY MARK

            COMPUTATION INTERVAL    0.08 HOURS
                 TOTAL TIME BASE   24.00 HOURS

      ENGLISH UNITS
          DRAINAGE AREA          SQUARE MILES
          PRECIPITATION DEPTH    INCHES
          LENGTH, ELEVATION      FEET
          FLOW                   CUBIC FEET PER SECOND
          STORAGE VOLUME         ACRE-FEET
          SURFACE AREA           ACRES
          TEMPERATURE            DEGREES FAHRENHEIT

*** *** *** *** *** *** *** *** *** *** *** *** *** *** *** *** *** *** *** *** *** *** *** *** *** *** *** *** *** *** *** ***

          **************
          *            *
 8 KK     *    FIRST   *      FLUSH
          *            *
          **************
                    SUB1

          SUBBASIN RUNOFF DATA

 10 BA      SUBBASIN CHARACTERISTICS
                 TAREA        1.83  SUBBASIN AREA

            PRECIPITATION DATA
```

.1 PH

DEPTHS FOR 1-PERCENT HYPOTHETICAL STORM

..... HYDRO-35			..... TP-40					..... TP-49			
5-MIN	15-MIN	60-MIN	2-HR	3-HR	6-HR	12-HR	24-HR	2-DAY	4-DAY	7-DAY	10-DAY
0.29	0.53	0.86	0.94	1.00	1.11	1.23	1.34	0.00	0.00	0.00	0.00

STORM AREA = 1.83

.2 LG

GREEN AND AMPT LOSS RATE

STRTL	0.35	STARTING LOSS
DTH	0.30	MOISTURE DEFICIT
PSIF	10.80	WETTING FRONT SUCTION
XKSAT	0.04	HYDRAULIC CONDUCTIVITY
RTIMP	0.00	PERCENT IMPERVIOUS AREA

13 UC

CLARK UNITGRAPH

TC	3.50	TIME OF CONCENTRATION
R	2.54	STORAGE COEFFICIENT

SYNTHETIC ACCUMULATED-AREA VS. TIME CURVE WILL BE USED

***

1.82500	1.82500
1.82500	1.82500
1.82500	1.82500
1.82500	1.82500
1.82500	1.82500
1.82500	1.82500
1.82500	1.82500

UNIT HYDROGRAPH PARAMETERS

CLARK TC= 3.50 HR, R= 2.54 HR

SNYDER TP= 3.15 HR, CP= 0.67

UNIT HYDROGRAPH

185 END-OF-PERIOD ORDINATES

1.	4.	9.	15.	22.	29.	37.	45.	54.	62.
72.	81.	91.	101.	111.	121.	131.	142.	152.	163.
173.	184.	194.	203.	212.	220.	227.	233.	239.	244.
248.	252.	255.	258.	259.	260.	261.	260.	259.	257.
253.	249.	242.	234.	226.	219.	212.	205.	199.	192.
186.	180.	174.	169.	163.	158.	153.	148.	143.	138.
134.	130.	125.	121.	117.	114.	110.	106.	103.	100.
96.	93.	90.	87.	85.	82.	79.	77.	74.	72.
69.	67.	65.	63.	61.	59.	57.	55.	53.	52.
50.	48.	47.	45.	44.	42.	41.	40.	38.	37.
36.	35.	34.	33.	32.	31.	30.	29.	28.	27.
26.	25.	24.	24.	23.	22.	21.	21.	20.	19.
19.	18.	18.	17.	16.	16.	15.	15.	14.	14.
13.	13.	13.	12.	12.	11.	11.	11.	10.	10.
10.	9.	9.	9.	9.	8.	8.	8.	7.	7.
7.	7.	7.	6.	6.	6.	6.	6.	5.	5.
5.	5.	5.	5.	4.	4.	4.	4.	4.	4.
4.	4.	3.	3.	3.	3.	3.	3.	3.	3.
3.	3.	2.	2.	2.					

HYDROGRAPH AT STATION FIRST

DA MON HRMN	ORD	RAIN	LOSS	EXCESS	COMP Q	*	DA MON HRMN	ORD	RAIN	LOSS	EXCESS	COMP Q
						*						

1	0000	1	0.00	0.00	0.00	0.	*
1	0005	2	0.00	0.00	0.00	0.	*
1	0010	3	0.00	0.00	0.00	0.	*
1	0015	4	0.00	0.00	0.00	0.	*
1	0020	5	0.00	0.00	0.00	0.	*
1	0025	6	0.00	0.00	0.00	0.	*
1	0030	7	0.00	0.00	0.00	0.	*
1	0035	8	0.00	0.00	0.00	0.	*
1	0040	9	0.00	0.00	0.00	0.	*
1	0045	10	0.00	0.00	0.00	0.	*
1	0050	11	0.00	0.00	0.00	0.	*
1	0055	12	0.00	0.00	0.00	0.	*
1	0100	13	0.00	0.00	0.00	0.	*
1	0105	14	0.00	0.00	0.00	0.	*
1	0110	15	0.00	0.00	0.00	0.	*
1	0115	16	0.00	0.00	0.00	0.	*
1	0120	17	0.00	0.00	0.00	0.	*
1	0125	18	0.00	0.00	0.00	0.	*
1	0130	19	0.00	0.00	0.00	0.	*
1	0135	20	0.00	0.00	0.00	0.	*
1	0140	21	0.00	0.00	0.00	0.	*
1	0145	22	0.00	0.00	0.00	0.	*
1	0150	23	0.00	0.00	0.00	0.	*
1	0155	24	0.00	0.00	0.00	0.	*
1	0200	25	0.00	0.00	0.00	0.	*
1	0205	26	0.00	0.00	0.00	0.	*
1	0210	27	0.00	0.00	0.00	0.	*
1	0215	28	0.00	0.00	0.00	0.	*
1	0220	29	0.00	0.00	0.00	0.	*
1	0225	30	0.00	0.00	0.00	0.	*
1	0230	31	0.00	0.00	0.00	0.	*
1	0235	32	0.00	0.00	0.00	0.	*
1	0240	33	0.00	0.00	0.00	0.	*
1	0245	34	0.00	0.00	0.00	0.	*
1	0250	35	0.00	0.00	0.00	0.	*
1	0255	36	0.00	0.00	0.00	0.	*
1	0300	37	0.00	0.00	0.00	0.	*
1	0305	38	0.00	0.00	0.00	0.	*
1	0310	39	0.00	0.00	0.00	0.	*
1	0315	40	0.00	0.00	0.00	0.	*
1	0320	41	0.00	0.00	0.00	0.	*
1	0325	42	0.00	0.00	0.00	0.	*
1	0330	43	0.00	0.00	0.00	0.	*
1	0335	44	0.00	0.00	0.00	0.	*
1	0340	45	0.00	0.00	0.00	0.	*
1	0345	46	0.00	0.00	0.00	0.	*
1	0350	47	0.00	0.00	0.00	0.	*
1	0355	48	0.00	0.00	0.00	0.	*
1	0400	49	0.00	0.00	0.00	0.	*
1	0405	50	0.00	0.00	0.00	0.	*
1	0410	51	0.00	0.00	0.00	0.	*
1	0415	52	0.00	0.00	0.00	0.	*
1	0420	53	0.00	0.00	0.00	0.	*
1	0425	54	0.00	0.00	0.00	0.	*
1	0430	55	0.00	0.00	0.00	0.	*
1	0435	56	0.00	0.00	0.00	0.	*
1	0440	57	0.00	0.00	0.00	0.	*
1	0445	58	0.00	0.00	0.00	0.	*
1	0450	59	0.00	0.00	0.00	0.	*
1	0455	60	0.00	0.00	0.00	0.	*
1	0500	61	0.00	0.00	0.00	0.	*
1	0505	62	0.00	0.00	0.00	0.	*
1	0510	63	0.00	0.00	0.00	0.	*
1	0515	64	0.00	0.00	0.00	0.	*
1	1205	146	0.29	0.06	0.23	0.	
1	1210	147	0.10	0.05	0.05	2.	
1	1215	148	0.05	0.04	0.01	3.	
1	1220	149	0.03	0.03	0.00	5.	
1	1225	150	0.03	0.03	0.00	7.	
1	1230	151	0.02	0.02	0.00	10.	
1	1235	152	0.01	0.01	0.00	12.	
1	1240	153	0.01	0.01	0.00	15.	
1	1245	154	0.01	0.01	0.00	18.	
1	1250	155	0.01	0.01	0.00	21.	
1	1255	156	0.01	0.01	0.00	24.	
1	1300	157	0.01	0.01	0.00	27.	
1	1305	158	0.01	0.01	0.00	31.	
1	1310	159	0.01	0.01	0.00	34.	
1	1315	160	0.01	0.01	0.00	37.	
1	1320	161	0.00	0.00	0.00	41.	
1	1325	162	0.00	0.00	0.00	44.	
1	1330	163	0.00	0.00	0.00	48.	
1	1335	164	0.00	0.00	0.00	52.	
1	1340	165	0.00	0.00	0.00	55.	
1	1345	166	0.00	0.00	0.00	59.	
1	1350	167	0.00	0.00	0.00	62.	
1	1355	168	0.00	0.00	0.00	66.	
1	1400	169	0.00	0.00	0.00	69.	
1	1405	170	0.00	0.00	0.00	72.	
1	1410	171	0.00	0.00	0.00	74.	
1	1415	172	0.00	0.00	0.00	77.	
1	1420	173	0.00	0.00	0.00	79.	
1	1425	174	0.00	0.00	0.00	81.	
1	1430	175	0.00	0.00	0.00	83.	
1	1435	176	0.00	0.00	0.00	84.	
1	1440	177	0.00	0.00	0.00	86.	
1	1445	178	0.00	0.00	0.00	87.	
1	1450	179	0.00	0.00	0.00	88.	
1	1455	180	0.00	0.00	0.00	88.	
1	1500	181	0.00	0.00	0.00	89.	
1	1505	182	0.00	0.00	0.00	89.	
1	1510	183	0.00	0.00	0.00	89.	
1	1515	184	0.00	0.00	0.00	88.	
1	1520	185	0.00	0.00	0.00	87.	
1	1525	186	0.00	0.00	0.00	86.	
1	1530	187	0.00	0.00	0.00	85.	
1	1535	188	0.00	0.00	0.00	82.	
1	1540	189	0.00	0.00	0.00	80.	
1	1545	190	0.00	0.00	0.00	77.	
1	1550	191	0.00	0.00	0.00	75.	
1	1555	192	0.00	0.00	0.00	72.	
1	1600	193	0.00	0.00	0.00	70.	
1	1605	194	0.00	0.00	0.00	68.	
1	1610	195	0.00	0.00	0.00	66.	
1	1615	196	0.00	0.00	0.00	63.	
1	1620	197	0.00	0.00	0.00	61.	
1	1625	198	0.00	0.00	0.00	59.	
1	1630	199	0.00	0.00	0.00	58.	
1	1635	200	0.00	0.00	0.00	56.	
1	1640	201	0.00	0.00	0.00	54.	
1	1645	202	0.00	0.00	0.00	52.	
1	1650	203	0.00	0.00	0.00	50.	
1	1655	204	0.00	0.00	0.00	49.	
1	1700	205	0.00	0.00	0.00	47.	
1	1705	206	0.00	0.00	0.00	46.	
1	1710	207	0.00	0.00	0.00	44.	
1	1715	208	0.00	0.00	0.00	43.	
1	1720	209	0.00	0.00	0.00	41.	

1	0520	65	0.00	0.00	0.00	0.	*	1	1725	210	0.00	0.00	0.00	40.
1	0525	66	0.00	0.00	0.00	0.	*	1	1730	211	0.00	0.00	0.00	39.
1	0530	67	0.00	0.00	0.00	0.	*	1	1735	212	0.00	0.00	0.00	38.
1	0535	68	0.00	0.00	0.00	0.	*	1	1740	213	0.00	0.00	0.00	36.
1	0540	69	0.00	0.00	0.00	0.	*	1	1745	214	0.00	0.00	0.00	35.
1	0545	70	0.00	0.00	0.00	0.	*	1	1750	215	0.00	0.00	0.00	34.
1	0550	71	0.00	0.00	0.00	0.	*	1	1755	216	0.00	0.00	0.00	33.
1	0555	72	0.00	0.00	0.00	0.	*	1	1800	217	0.00	0.00	0.00	32.
1	0600	73	0.00	0.00	0.00	0.	*	1	1805	218	0.00	0.00	0.00	31.
1	0605	74	0.00	0.00	0.00	0.	*	1	1810	219	0.00	0.00	0.00	30.
1	0610	75	0.00	0.00	0.00	0.	*	1	1815	220	0.00	0.00	0.00	29.
1	0615	76	0.00	0.00	0.00	0.	*	1	1820	221	0.00	0.00	0.00	28.
1	0620	77	0.00	0.00	0.00	0.	*	1	1825	222	0.00	0.00	0.00	27.
1	0625	78	0.00	0.00	0.00	0.	*	1	1830	223	0.00	0.00	0.00	26.
1	0630	79	0.00	0.00	0.00	0.	*	1	1835	224	0.00	0.00	0.00	25.
1	0635	80	0.00	0.00	0.00	0.	*	1	1840	225	0.00	0.00	0.00	25.
1	0640	81	0.00	0.00	0.00	0.	*	1	1845	226	0.00	0.00	0.00	24.
1	0645	82	0.00	0.00	0.00	0.	*	1	1850	227	0.00	0.00	0.00	23.
1	0650	83	0.00	0.00	0.00	0.	*	1	1855	228	0.00	0.00	0.00	22.
1	0655	84	0.00	0.00	0.00	0.	*	1	1900	229	0.00	0.00	0.00	21.
1	0700	85	0.00	0.00	0.00	0.	*	1	1905	230	0.00	0.00	0.00	21.
1	0705	86	0.00	0.00	0.00	0.	*	1	1910	231	0.00	0.00	0.00	20.
1	0710	87	0.00	0.00	0.00	0.	*	1	1915	232	0.00	0.00	0.00	19.
1	0715	88	0.00	0.00	0.00	0.	*	1	1920	233	0.00	0.00	0.00	19.
1	0720	89	0.00	0.00	0.00	0.	*	1	1925	234	0.00	0.00	0.00	18.
1	0725	90	0.00	0.00	0.00	0.	*	1	1930	235	0.00	0.00	0.00	18.
1	0730	91	0.00	0.00	0.00	0.	*	1	1935	236	0.00	0.00	0.00	17.
1	0735	92	0.00	0.00	0.00	0.	*	1	1940	237	0.00	0.00	0.00	17.
1	0740	93	0.00	0.00	0.00	0.	*	1	1945	238	0.00	0.00	0.00	16.
1	0745	94	0.00	0.00	0.00	0.	*	1	1950	239	0.00	0.00	0.00	15.
1	0750	95	0.00	0.00	0.00	0.	*	1	1955	240	0.00	0.00	0.00	15.
1	0755	96	0.00	0.00	0.00	0.	*	1	2000	241	0.00	0.00	0.00	14.
1	0800	97	0.00	0.00	0.00	0.	*	1	2005	242	0.00	0.00	0.00	14.
1	0805	98	0.00	0.00	0.00	0.	*	1	2010	243	0.00	0.00	0.00	14.
1	0810	99	0.00	0.00	0.00	0.	*	1	2015	244	0.00	0.00	0.00	13.
1	0815	100	0.00	0.00	0.00	0.	*	1	2020	245	0.00	0.00	0.00	13.
1	0820	101	0.00	0.00	0.00	0.	*	1	2025	246	0.00	0.00	0.00	12.
1	0825	102	0.00	0.00	0.00	0.	*	1	2030	247	0.00	0.00	0.00	12.
1	0830	103	0.00	0.00	0.00	0.	*	1	2035	248	0.00	0.00	0.00	12.
1	0835	104	0.00	0.00	0.00	0.	*	1	2040	249	0.00	0.00	0.00	11.
1	0840	105	0.00	0.00	0.00	0.	*	1	2045	250	0.00	0.00	0.00	11.
1	0845	106	0.00	0.00	0.00	0.	*	1	2050	251	0.00	0.00	0.00	10.
1	0850	107	0.00	0.00	0.00	0.	*	1	2055	252	0.00	0.00	0.00	10.
1	0855	108	0.00	0.00	0.00	0.	*	1	2100	253	0.00	0.00	0.00	10.
1	0900	109	0.00	0.00	0.00	0.	*	1	2105	254	0.00	0.00	0.00	9.
1	0905	110	0.00	0.00	0.00	0.	*	1	2110	255	0.00	0.00	0.00	9.
1	0910	111	0.00	0.00	0.00	0.	*	1	2115	256	0.00	0.00	0.00	9.
1	0915	112	0.00	0.00	0.00	0.	*	1	2120	257	0.00	0.00	0.00	9.
1	0920	113	0.00	0.00	0.00	0.	*	1	2125	258	0.00	0.00	0.00	8.
1	0925	114	0.00	0.00	0.00	0.	*	1	2130	259	0.00	0.00	0.00	8.
1	0930	115	0.00	0.00	0.00	0.	*	1	2135	260	0.00	0.00	0.00	8.
1	0935	116	0.00	0.00	0.00	0.	*	1	2140	261	0.00	0.00	0.00	8.
1	0940	117	0.00	0.00	0.00	0.	*	1	2145	262	0.00	0.00	0.00	7.
1	0945	118	0.00	0.00	0.00	0.	*	1	2150	263	0.00	0.00	0.00	7.
1	0950	119	0.00	0.00	0.00	0.	*	1	2155	264	0.00	0.00	0.00	7.
1	0955	120	0.00	0.00	0.00	0.	*	1	2200	265	0.00	0.00	0.00	7.
1	1000	121	0.00	0.00	0.00	0.	*	1	2205	266	0.00	0.00	0.00	6.
1	1005	122	0.00	0.00	0.00	0.	*	1	2210	267	0.00	0.00	0.00	6.
1	1010	123	0.00	0.00	0.00	0.	*	1	2215	268	0.00	0.00	0.00	6.
1	1015	124	0.00	0.00	0.00	0.	*	1	2220	269	0.00	0.00	0.00	6.
1	1020	125	0.00	0.00	0.00	0.	*	1	2225	270	0.00	0.00	0.00	6.
1	1025	126	0.00	0.00	0.00	0.	*	1	2230	271	0.00	0.00	0.00	5.
1	1030	127	0.00	0.00	0.00	0.	*	1	2235	272	0.00	0.00	0.00	5.
1	1035	128	0.00	0.00	0.00	0.	*	1	2240	273	0.00	0.00	0.00	5.

1	1040	129	0.00	0.00	0.00	0.	*	1	2245	274	0.00	0.00	0.00	5.
1	1045	130	0.00	0.00	0.00	0.	*	1	2250	275	0.00	0.00	0.00	5.
1	1050	131	0.01	0.01	0.00	0.	*	1	2255	276	0.00	0.00	0.00	5.
1	1055	132	0.01	0.01	0.00	0.	*	1	2300	277	0.00	0.00	0.00	4.
1	1100	133	0.01	0.01	0.00	0.	*	1	2305	278	0.00	0.00	0.00	4.
1	1105	134	0.01	0.01	0.00	0.	*	1	2310	279	0.00	0.00	0.00	4.
1	1110	135	0.01	0.01	0.00	0.	*	1	2315	280	0.00	0.00	0.00	4.
1	1115	136	0.01	0.01	0.00	0.	*	1	2320	281	0.00	0.00	0.00	4.
1	1120	137	0.01	0.01	0.00	0.	*	1	2325	282	0.00	0.00	0.00	4.
1	1125	138	0.01	0.01	0.00	0.	*	1	2330	283	0.00	0.00	0.00	4.
1	1130	139	0.01	0.01	0.00	0.	*	1	2335	284	0.00	0.00	0.00	4.
1	1135	140	0.02	0.02	0.00	0.	*	1	2340	285	0.00	0.00	0.00	3.
1	1140	141	0.03	0.03	0.00	0.	*	1	2345	286	0.00	0.00	0.00	3.
1	1145	142	0.03	0.03	0.00	0.	*	1	2350	287	0.00	0.00	0.00	3.
1	1150	143	0.05	0.05	0.00	0.	*	1	2355	288	0.00	0.00	0.00	3.
1	1155	144	0.06	0.06	0.00	0.	*	2	0000	289	0.00	0.00	0.00	3.
1	1200	145	0.14	0.09	0.05	0.	*							
							*							

TOTAL RAINFALL = 1.34, TOTAL LOSS = 1.00, TOTAL EXCESS = 0.34

PEAK FLOW (CFS)	TIME (HR)		MAXIMUM AVERAGE FLOW 6-HR	24-HR	72-HR	24.00-HR
89.	15.08	(CFS)	56.	16.	16.	16.
		(INCHES)	0.285	0.334	0.334	0.334
		(AC-FT)	28.	32.	32.	32.

CUMULATIVE AREA = 1.83 SQ MI

RUNOFF SUMMARY

FLOW IN CUBIC FEET PER SECOND

TIME IN HOURS, AREA IN SQUARE MILES

OPERATION	STATION	PEAK FLOW	TIME OF PEAK	AVERAGE FLOW FOR MAXIMUM PERIOD 6-HOUR	24-HOUR	72-HOUR	BASIN AREA	MAXIMUM STAGE	TIME OF MAX STAGE
HYDROGRAPH AT	FIRST	89.	15.08	56.	16.	16.	1.83		

*** NORMAL END OF HEC-1 ***

APPENDIX D

Santan Treatment Wetlands Report
(Southeast Valley Regional Drainage Project)

SANTAN
TREATMENT WETLAND

(Southeast Valley Regional Drainage Project)

Prepared by

Martin M. Karpiscak
Office of Arid Lands Studies
The University of Arizona
1955 East 6th Street
Tucson Arizona 85719

Submitted to

HDR Engineering, Inc.
5353 North 16th Street
Phoenix Arizona 85016-3226

June 1998

SANTAN
TREATMENT WETLAND

(Southeast Valley Regional Drainage Project)

Prepared by

Martin M. Karpiscak
Office of Arid Lands Studies
The University of Arizona
1955 East 6th Street
Tucson Arizona 85719

Submitted to

HDR Engineering, Inc.
5353 North 16th Street
Phoenix Arizona 85016-3226

June 1998

TABLE OF CONTENTS

Page

List of Figures ii

List of Tables ii

I. Introduction 1

II. Traditional Stormwater Treatment System Designs 4
- Introduction 4
- Detention/Retention Systems 4
- Wet Detention Ponds 5
- Maintenance 7
- Disadvantages 8
- Economic Analysis 8

III. Constructed Wetland Design Alternatives 10
- Free Water Surface 10
- Subsurface Flow 10
- Aquatic Pond 10
- Planted Filter Strips 11
- "Arid Wetland" 11
- "Hybrid" System 12

IV. Wetland Operations 13
- Control Mechanisms 13
- "Time???" 13
- Water Requirements 15
- Single- Vs. Multi-celled System 16
- Animals and the System 16
- Public Access 17
- Weed Control 18
- Water Depth 19
- Soil/Substrate 20
- Liner Requirements 21

V. Plant Materials Options 24

VI. Mosquitoes 30
- Introduction 30
- Mosquito Production 30
- Control Considerations 32

TABLE OF CONTENTS, cont.

Page

VII. Recommendations 40
Wetland Design 40
Plants 43
Soil 43
Mosquito Control 43
Monitoring/Research 44
Routine Maintenance 44

References 47

Appendices 49
Appendix A: Selected Arizona Wetland and Riparian Plants
Appendix B: Noxious Weed Regulations and Noxious Weed Lists

LIST OF FIGURES

Figure Page

1 "Hybrid" Free Water Surface/Subsurface Flow Wetland System 41

LIST OF TABLES

Table Page

1 Maricopa County Mosquito Species 36

2 Monitoring Parameters, Sampling Points and Suggested Frequency 45

SANTAN
CONSTRUCTED WETLAND

I. INTRODUCTION

All wastewater treatment technologies require the use of natural processes such as microbial reactions or gravity for sedimentation. The great advantage of a constructed wetland or ecosystem for water quality enhancement is that these systems do not require large amounts of energy generated from fossil energy sources nor elaborate treatment facilities.

Natural wetlands are typically called marshes, swamps, or bogs. These natural areas are vegetated with dense and, many times, diverse plant communities that can provide habitat for birds, reptiles, mammals, amphibians, invertebrates, as well as complex microbial communities. Thus, these ecosystems can be rich, complex "natural communities" that perform as nature's mechanism for enhancing water quality.

The use of a constructed wetland for treating various types of wastewater is a relatively recent adaptation of the use of nature's own water treating "facility". The oldest full-scale constructed wetland system has been operating for only about 20 years. There are 3 major types of constructed wetland systems currently in use: floating aquatic plants (FAP), subsurface flow (SSF), and surface flow (SF), also called free water surface (FWS). The use of these systems is rapidly expanding for the treatment of many types of wastewater, including stormwater (Schueler, 1992; Olson, 1993).

Some of the major components of a constructed wetland that can impact the efficiency of the treatment process include: plant species, soils, detritus, microbial species, and presence/ab-

sence of animals. These components are in turn influenced by water depth, air/water temperature, pH, and dissolved oxygen (Reed *et al.*, 1995).

Stormwater quality has become a major concern, especially in urban areas. Stormwater runoff from urban areas can contain high levels of nutrients, sediments, residues from exhaust fumes, and other contaminants (Environet, 1997). A study conducted in Ontario indicated that bacteria and heavy metals, principally lead, zinc and cadmium, were of primary concern from stormwater runoff. Contaminants from industrial and residential activities were found to already impact the local river. Typically reported were illicit discharges arising from poor housekeeping practices, especially in industrial areas (Environet, 1997).

Carefully designed and built constructed wetland treatment systems can serve as a component of a facility to treat non-point source (NPS) pollution problem occurring in stormwater runoff (Schueler, 1992; Olson, 1993). A constructed wetland can remove many of the NPS contaminants found in stormwater runoff by biological, chemical and physical means, in much the same way as a natural wetland or more conventional treatment systems. These engineered wetlands can be designed to treat specific contaminants, enhance flood control, and provide many of the ancillary benefits of natural wetlands such as wildlife habitat, aesthetically pleasing open space and recreational opportunities (Environet, 1997).

Constructed wetland basins, cells, raceways, or ponds can act as natural filters by trapping sediments. Macrophytes (emergent or aquatic vegetation) growing within the cells can utilize nutrients such as phosphates and nitrates. They can also take up and use and/or concentrate heavy metals contained in the stormwater or the sediment. The primary design parameters for a

constructed wetland include: hydraulics, detention times, flow rates, water velocities, aquatic vegetation and fauna, access for maintenance, and harvesting and monitoring.

During a study conducted in Bayswater, Perth, Australia (Environet, 1997), samples were taken at the inlet and outlet of the two wetland basins designed for stormwater runoff under steady flow conditions. Cage structures with weirs are situated at the outlet of each wetland. Both wetlands successfully filter sediment, but the efficiency is dependent on the design of each wetland. The following results from the water sampling were obtained. Values are expressed as the mean.

Species	Inlet (mg/l)	Outlet (mg/l)
Total Suspended Solids	16.3	6.6
Volatile Suspended Solids	9.5	6.6
NO_3-N	3.1	1.7
Total Kjeldahl Nitrogen	1.0	0.9
Heavy Metals	<0.02	<0.02
Total Phosphorus	some samples higher in outflow than inflow, particularly for samples taken after rainfall	

Aquatic species in the basins include *Typha orientalis*, *Potamogeton cripus*, *Juncus pallidus*, *Juncus krassii*, *Cyperus rotundus*, *Bolboschoenus caldwellii*, and *Avena satira,* with *Juncus pallidus* as the dominant species.

II. TRADITIONAL STORMWATER TREATMENT SYSTEM DESIGNS

Introduction

Stormwater detention basins can be designed with aesthetic features and can provide for water quality improvements. Some have termed these areas "biofilters". Included in these are shallow water marshes, reasonably flooded basins, and wet and dry meadows (Ferlow, 1993).

Ponding stills the stormwater and permits silts and sediments as well as their attached pollutants to settle out and sometimes bind with bottom sediments. Soluble pollutants are probably best removed in a permanent pond, emergent wetland or by means of extended runoff retention, utilizing microbial activity within a shallow intermittently wet scrub shrub brush habitat (Ferlow, 1993). Pollutant removal will vary seasonally with the highest removal rates occurring in summer.

Detention/Retention Systems

Most stormwater detention ponds dry out quickly under arid conditions. Often, during the rainy season, the water levels in these ponds remain at or near the outflow structures. Stormwater entering a detention area under these conditions displaces an equivalent amount of water that usually overflows to an adjacent man-made or natural drainage system. The detention pond acts as a sink or trap where pollutants picked up by the initial surge of stormwater settle out before leaving the detention pond. These ponds are usually referred to as "Wet-detention systems" (O'Meara and Purcell, 1993).

By contrast, retention areas are designed to hold stormwater until the effects of percolation and evapotranspiration return the area to its normal dry state. Since these stormwater retention areas are designed to dry out rapidly, they are usually called "dry-retention systems" (O'Meara

and Purcell, 1993). The Equalization Basin in the Santan Basin B complex represents a dry-retention system. First-flush stormwater is retained and is slowly discharged to the treatment cells, providing primary sedimentation.

Wet Detention Ponds

A wet detention pond is a pond that is specifically designed, built and/or modified to maintain a permanent pool of water within a designated area and that relies on physical, biological, and chemical processes to remove pollutants from stormwater runoff. Pollutants removed include sediment, organic matter, dissolved metals, and nutrients. In addition, wet detention ponds control stormwater flow that prevents downstream flooding. As stormwater enters the pond, treated water is displaced and discharged into a receiving body of water. Enhanced treatment of stormwater runoff can be achieved through extended detention and the use of aquatic plants in the perimeter of the pond or by the addition of a constructed wetland. Sediment removal can also be increased through the use of sediment traps in the perimeter of the pond. Sediment removal can also be increased through the use of a sediment forebay (EnviroSense, 1997).

Before construction of a pond begins, local, state, and federal permits should be confirmed and approved for all aspects of construction including wetlands, water quality, dam safety, grading, erosion control, and land use. Wet detention ponds rely on the existence of a permanent pool of water within the pond and, therefore, should be placed in areas with adequate baseflow from groundwater or from other sources to maintain an adequate water level. Soils under the pond should have a low permeability (10^{-5} to 10^{-6} cm/sec) to ensure future existence of the pond. Placement should take into consideration a location that allows for maximum detention volume while requiring minimal earth removal, thus lowering construction costs. Pond construction

should not be considered near land constraints such as utilities or underlying bedrock (EnviroSense, 1997).

Pollutant removal in the pond is determined using one of two methods: solids settling and eutrophication. The solids settling method relies on pollutant removal through sedimentation and the eutrophication method removes nutrients using natural biological processes. According to the National Urban Runoff Program (NURP), up to two-thirds of the sediments, trace metals, and nutrients are removed as a result of sedimentation within 24 hours. Other studies that looked at biological removal suggest hydraulic residence times (HRTs) close to two weeks to get adequate phosphorus removal (EnviroSense, 1997). Documented removal efficiencies for wet detention ponds are as follows:

	Percent Removal	
Parameter	**Schueler, 1992[1]**	**Hartigan, 1988[2]**
Total Suspended Solids	50-90	80-90
Total Phosphorous	30-90	
Soluble Nutrients	40-80	50-70
Lead		70-80
Zinc		40-50
Biochemical Oxygen Demand		20-40
Chemical Oxygen Demand		20-40

[1]hydraulic residence time varies
[2]hydraulic residence time of 2 weeks

Two ratios are useful at predicting pollutant removal efficiencies: volume ratio and area ratio. Volume ratio (VB/VR) is the ratio of permanent pool storage (VB) to the mean storm runoff (VR). Area ratio (A/As) is the ratio of the contributing drainage area (A) to the permanent pool surface area (As). Both of these ratios are correlated with treatment efficiencies. Large

volume ratios result in increased retention and treatment between storms while low pollutant efficiencies are achieved with low volume ratios (EnviroSense, 1997).

Pool depth can play a critical role in pollutant removal and storage, but caution should be taken when increasing the depth of the pool. A pond with an HRT of two weeks would function optimally at depth ranges from 3 to 9 feet; shallower depths with the same pond surface area have shorter HRTs (EnviroSense, 1997).

Water within the pond is discharged through an outlet. A wet pond outlet consists of a vertical riser, either concrete or corrugated metal, attached to a horizontal barrel that conveys stormwater flow under the embankment to a receiving stream. The outlet is designed to pass excess water while maintaining a permanent pool. Risers are typically placed in or on the edge of the embankment and are capped with a trash rack to prevent clogging (EnviroSense, 1997). Due to the intermittent occurrences of runoff events in the Phoenix area and the high evaporation rates, a wet-detention pond would require large quantities of supplemental water to maintain the aquatic system. Therefore, a wet detention pond is not recommended for this project.

Maintenance

As with any stormwater best management practice (BMP), proper maintenance will be required to ensure proper functioning of the pond (EnviroSense, 1997). Proper maintenance may include any or all of the following:

- Clearing trash and debris
- Conducting routine inspections of the embankment and spillway to check structural integrity and look for signs of erosion or animal habitation
- Conducting periodic repairs on the embankment, emergency spillway, inlet, and outlet

- Maintaining that outfall area (i.e., replacing rip-rap, removing sediments, etc.)

Sediments collected by the wet detention pond typically meet toxicity limits and can be landfilled safely. Testing of the sediments may be required if the upstream drainage area is industrial and/or results in highly contaminated runoff. Non-toxic sediments can also be disposed on site, but away from the high water line to prevent their re-entry into the pond. The removal of sediments in a pond may be necessary every 20 years. This can be decreased to every 50 years if a sediment forebay is used prior to the wet pond. The sediment forebay would require maintenance every 5 to 7 years (EnviroSense, 1997).

Disadvantages

Pond construction should not be considered near land constraints such as utilities, underlying bedrock, or abundant landfills or wildcat dumps. Sediments from upstream industrial or highly contaminated runoff areas may be a hazardous waste requiring special disposal/treatment (EnviroSense, 1997). To our knowledge, the Santan watershed does not have an unusually high potential for extremely contaminated runoff, although hazardous spills can and do happen in any urban watershed.

Economic Analysis

Budgeting for construction of a wet detention pond should include costs for permitting, designing, constructing, and maintaining the pond. Costs will vary for permitting from state to state as will the construction of a pond in a developing area versus a developed area. Developing areas tend to be less costly, as there are less problems with existing utility and structure constraints. An average cost for a 1-acre, 5-foot deep pond with a storage volume of 180,000

cubic feet is $75,000 (EnviroSense, 1997). Costs for the recommended plants in the treatment cells are needed as well as annual maintenance costs.

Annual maintenance and operation costs typically range between 3 to 5 percent of construction costs. Maintenance costs include sediment removal, grass mowing, nuisance control (problematic animals), trash removal, routine inspections, and monitoring and sampling. On-site sediment disposal should be utilized when possible, as costs can be reduced by as much as 50 percent (EnviroSense, 1997).

Planting costs vary depending on the design of the system, the plant species used and the type of plant material used. It is estimated that planting costs for wetlands would be in the area of $2,000 to $5,000 per acre with adjacent landscaping costing as much as $20,000.

III. CONSTRUCTED WETLAND DESIGN ALTERNATIVES

There are several design alternatives for treatment of water at the Santan Project. These can be described as free water surface wetland (FWS), subsurface flow wetland (SSF), aquatic ponds, an "arid wetland", and planted filter strips.

Free Water Surface

The most used wetland design for large-scale constructed wetlands in the United States is the free water surface wetland. This system is typical of what would be found in nature. It has areas of open water as well as dense stands of emergent and sometimes submerged plants. The dominate species are cattail, bulrush, and common reed. Some of these systems are planted with additional species to enhance the wildlife habitat value of the system. Less costly to build than a subsurface flow wetland, this system has all the problems of open water, i.e. potential mosquito issues.

Subsurface Flow

The subsurface flow wetland design is widely used for many small-scale systems such as at individual residences. It also can be designed to operate in a vertical mode, not only the typical horizontal flow. Plant species usually employed are the same as in the free water surface wetland. The major problems associated with this design are the high cost of gravel or other media to support the emergent plants and the potential for the media to clog over time.

Aquatic Pond

Aquatic ponds typically are covered by floating macrophytic plants such as water hyacinth and duckweed. These ponds can vary in depth and shape and can be lined or unlined, depending on water quality, depth of water, and permit requirements. Both water hyacinths and duckweed

require harvesting. Mosquitoes can be present because of the open water surface, especially that created during harvesting of the plants.

Planted Filter Strips

Another possible alternative treatment design is an overland flow system. This typically consists primarily of grass or grasslike plants through which large volumes of water flow on a very regular basis. *Cynodon dactylon* (Bermuda grass) might be a candidate species. This plant is a particularly aggressive weed that can withstand some degree of inundation, high salt levels, and almost anything that man can try as a weed control method. Because of allergy concerns, the plant would likely have to be harvested regularly. Mosquitoes are also known to breed in well-watered Bermuda grass. This type of system is basically a meadow and must be planted with a water-tolerant grass or sedge. It can be operated in a continuous mode with 1 to 5 cm of water depth. In any case, supplemental water would be required to maintain the plants. Olson (1993) reported that one water-tolerant grass species that has been used in this kind of system is *Phalaris arundinacea* (reed canary grass). Canary grass has been found growing in parts of Arizona.

"Arid Wetland"

A variation on the concept of planted filter strips could be called an "arid wetland". This type of wetland can be created with plants that are adapted to periodic flooding and can be found growing in similar conditions in Arizona. An example of this type of wetland is the St. David cienega near Benson, Arizona. This kind of wetland is not suitable for permanent flooding, but requires that periodic flooding occur. Two of the most likely candidate plant species for this type of wetland are *Hilaria mutica* (Tobosa grass) and *Prosopis juliflora* (mesquite).

This particular type of wetland has never been built. Therefore, many questions would need to be addressed such as length of the period of inundation, depth of inundation, treatment efficiency, plant species composition, etc. This experimental system if successful, however, might prove to be suitable for many arid portions of Arizona that have limited periods of adequate water availability combined with long periods of little or no water. Floodwater mosquitoes might prove to be a problem. Other types of mosquitoes also could become a problem if long periods of inundation are possible (see section below on Mosquitoes). Another possible issue could be weed control, although dense stands of established *Hilaria* should out-compete most other weeds.

"Hybrid' System

An experimental system currently under development at the Constructed Ecosystems Research Facility in Tucson might provide operational flexibility. This system could be operated as a surface flow system as well as a subsurface flow system if mosquito breeding became a significant problem. If required to control mosquito larvae, exposed surface water could be concentrated in deep zones that would have little cover for larvae in and around emergent vegetation, thus making it easier to control breeding (see Section VII).

IV. WETLAND OPERATIONS

Control Mechanisms

There are only a few control mechanisms for operating a wetland system. These include variation of influent flow, loading rates, water level within the cells, rotation in the use of individual cells, and variations in pretreatment. Vegetation management options include species selective removal, and the control of fire (Kadlec and Knight, 1996).

At the Santan facility, the supply of water will be controlled with external irrigation water applied as necessary to establish and maintain the treatment cells. The water can be recycled and therefore, a traditional "residence" or "detention" time approach to design is not meaningful.

Created wetland biofilters require a period of time to establish, stabilize, and grow into a viable functioning wetland. This may involve 2 to 5-plus years, as each system is different and dependent upon the specific site conditions related to the hydraulic regime. For example, a pond or permanent shallow marsh biofilter may be an almost "instant" wetland success with dense growth achieved in one season, whereas an intermittently wet and dry scrub brush biofilter will require at least several growing seasons to become established and several more years to present a natural stable visual character (Ferlow, 1993). If the "arid wetland" or a "hybrid" concept is chosen, then the Santan facility could have two different types of wetland.

Pond biofilters, used as landscape features, have the potential to be impacted by run-off-carried debris and petroleum products which "float" across the surface and degrade general visual quality. These aesthetic impacts can be significantly reduced through construction of a stone-lined, heavily vegetated, bowl-shaped "trap" at the inlets. Entering runoff must pass through the

rough stone layer and plant material growth. A significant percentage of the "floatables" will be caught and held at this point. "Trap" locations should be designed for easy access and periodic removal of the collected materials (Ferlow, 1993). At the Santan facility, there are trash racks at the inlet to the cells and at the outlets from the cells.

To ensure the potential for reasonable success, created wetland biofilters require detailed construction monitoring and maintenance during their time of establishment. Water levels must be checked, adjusted, and stabilized at optimum levels. Water elevation fluctuations of several inches can change the type from wetland-oriented to upland, or drown desired plants. Undesirable pioneer plant growth must be controlled or weeded out until desirable higher-quality vegetation has had time to become established and has a reasonable chance for continuance. Once established, the desirable wetland vegetation appears to have the potential to complete reasonably with the more aggressive weed species (Ferlow, 1993).

In a newly-created biofilter, wildlife impacts may have to be controlled to manageable levels, at least until the ecosystem can survive what might be considered normal wildlife predation impacts. For example, fine tuning of "normal" water level in a shallow marsh biofilter may be necessary to limit the habitat value of the created wetland for species that have the potential for negative impacts on the recently planted vegetation (Ferlow, 1993).

As a created wetland biofilter grows and matures, it may change in visual character and habitat type from the original design. Rainfall cycles, water levels, natural plant growth patterns, and wildlife utilization will play a role in and the establishment of wetland functional values (Ferlow, 1993).

Though designed with the same basic standards, healthy functioning biofilters display quite diverse results. When correctly sited within the development plan, created wetland biofilters provide strong visual interest in the landscape and act as natural open-space buffers (Ferlow, 1993).

The strong natural visual values, open-space elements, wildlife habitat characteristics, run-off control features, and water-borne materials reduction within created wetland biofilters represent positive environmental conditions (Ferlow, 1993.)

Water Requirements

In order to maintain a typical constructed wetland planted with bulrush, cattail, or common reed that is designed to capture and treat stormwater runoff in Phoenix, supplementary water will be required. Based on the water required by traditional agricultural crops such as cotton, alfalfa, and pecans, and on a pan evaporation rate of about 9,000 mm (108 inches) annually, it can be estimated that about 3 m (9 feet) of water will be required annually if significant amounts of water are not lost to seepage. In metro Phoenix, only 5 to10 storm events on average per year will produce adequate precipitation to yield stormwater runoff to the Santan system.

For design purposes, the evapotranspiration rate should be estimated as 80 percent of pan evaporation for the greater Phoenix area. This would be about the same as a lake evaporation rate. In the continuing discussion over the issue of evapotranspirational losses from aquatic systems and wetlands, the general consensus is that shading from floating aquatic plants or emergent species decreases evaporation from the water surface, but plants continue to transpire. Therefore, the effect is that the presence or absence of plants results in about the same rate of water loss (Reed *et al.*, 1995). Preliminary data indicate that, after about one year of operation,

evapotranspirational and seepage losses from the Sweetwater Wetlands in Tucson are over 40 percent of the incoming water. At Tres Rios in the Greater Phoenix area, overall water loss has been reported to be approximately 12 to 15 percent with 3 to 5 percent being attributed to evapotranspirational losses or about 5 to 6 feet (Wass, 1998).

The use of supplemental water in arid Arizona may create some negative public perceptions and negative press. It is critical, therefore, that low quality water or water that is currently not being used for productive purposes be applied and that this information be well-documented and clearly stated in any information distributed about the system.

Single- Vs. Multi-celled System

It is generally agreed in the engineering community that a constructed wetland should be designed as a multi-celled system. The presence of multi-cells provides operational flexibility from a perspective of water availability as well as for maintenance and/or repair. Planting individual cells with different species facilitates operation of the system. The use of a single-cell system should be avoided.

Animals and the System

As noted above, the presence of water and plants will attract many animals. Most of these will have little impact on the operation of the wetland facility. However, rabbits and/or herbivores can denude a recently-planted area rapidly. Inundation of 15 cm (6 inches) will prevent rabbits from browsing newly planted material. Areas that are not inundated will need to be fenced to prevent destruction of the plants. This applies even to desert plants such as mesquite. Once established, most of the plant species can readily endure browsing by rabbits, deer, or other

mammals. At the Santan facility, the Basin site will be fenced. However, some animals will still be able to enter the system unless the fencing is specifically designed to exclude them.

Typically, birds have minimal direct impact on the plants, but the presence of large numbers of birds at particular times of the year can adversely impact the quality of the water leaving the wetland. The birds also will introduce seeds, especially cattail, from other areas and can add significantly to the organic waste load.

Overall, it will be impossible to exclude birds, mammals, insects, and other animals from the system. Therefore, the only control measures that should be undertaken are as noted above for initial plant protection or as mentioned in the section under mosquito control.

Public Access

The presence of water and a diverse plant community in an arid area such as the proposed siting for the Santan project will attract birds and other animals whether or not the wetland is designed to do so. The presence of birds and other animals will, in turn, draw the attention of people. In Tucson, at the Sweetwater Wetlands and to a lesser degree at the 91st Avenue Wetland in Phoenix, the public's presence has been encouraged. The opportunity for the public to visit and view these systems is very positive from both a multiple use concept as well as from a public educational and public relations aspect. Nevertheless, inviting the public into the wetland environment has some significant consequences. The first of these is the cost of designing the system to accommodate the presence of the public. At the Sweetwater Wetlands, paved paths, restroom facilities, overlooks, parking, signage, and other amenities are being provided at significant costs. At 91st Avenue, fewer amenities are provided. At both facilities, the issue of liability and protecting the public are of concern. The presence of mosquitoes at 91st Avenue

raises issues of public perception and safety as well. The Sweetwater facility is too new to evaluate the issue of mosquitoes at that location.

From the standpoint of the Arizona Department of Transportation (ADOT) and Maricopa County, the least costly, lowest maintenance and most easily implemented alternative would be to exclude the public. A possible compromise would be to post signage around the facility informing the public about the facility and its purpose, and only permitting occasional visits by organized groups.

The decision to use this facility as strictly a fenced operational facility with little if any public access will eliminate the need to maintain the Santan facility in a manner required by public aesthetics or for public access. Maintenance, therefore, will be dictated by operational concerns.

Weed Control

The presence of weeds at the site is to be expected, both within and around the wetland cells. One of the major weeds to be expected around the cells in the dry areas is likely to be *Salsola kali* (Russian thistle or tumbleweed). Other annual and perennial weeds are also to be expected. These can be controlled readily by minimizing soil disturbance, using pre-emergent herbicides and/or Roundup® or other weeding methods. An important concern, however, is if these herbicides should get into the water stream flowing in the wetland cells.

Within the wetland cells, cattail is the most likely herbaceous weed and can be removed by hand until the other desired species are firmly established. At that time, the desired species should maintain themselves. Around the edge of the cells, *Tamarix chinesis* (salt cedar) and *Cynodon dactylon* sp. (Bermuda grass) will be present. It is strongly recommended that any young seedlings of both salt cedar and Bermuda grass be removed immediately, because once

established, these prolific seedling exotic plants will rapidly become major components of the plant community as well as major pests. Also, once established, they are difficult, if not impossible, to remove and/or control. It would require extensive, repeated physical control as well as the use of selected herbicides. Control of these species, however, has proven to be very difficult.

Within the "arid wetland," weeds will tend to be a greater problem unless one or some combination of several options are used to control their development: (1) the use of pre-emergent herbicides, (2) the use of Roundup®, (3) mechanical control (blading, mowing, hoeing), (4) development of a dense ground cover, or (5) the use of a rock or other mulch cover. Weeds that could be expected in this area are both dry land weeds such as tumbleweed and careless weed (*Amanthus palmeri*) as well as other weeds such as Bermuda grass (*Cynodon dactylon*).

The use of decomposed granite on the sides of any of the wetland system is unlikely to completely prevent the growth of weeds. Water is likely to wick up the sides in sufficient quantities to support the growth of weeds. A geotextile liner at the surface would provide a very good barrier to weed development. However, the cost for material and installation would likely be substantial and the liner would be subject to damage. If the liner were buried, the wicking problem would still occur and weeds would still have to be removed.

Water Depth

Water depth in surface flow (SF) constructed wetland treatment systems affects the growth, survival, and reproduction of plants, the detention time, the ability of oxygen to diffuse from the atmosphere into the water, and the composition of the microbial community. Typical operational water depths in SF constructed wetland treatment systems range from about 15 to 60 cm (0.5 to

2 feet). When combined with high organic loadings, greater depths provide poor root oxygenation and poor plant growth. Water depth in SF systems should be adjusted to optimize plant growth, especially during start-up, as long as treatment goals are being accomplished. Outlet structures should be designed to permit water depths ranging from zero up to the maximum design depth (Knight *et al.*, 1995). Gates with weirs can be used to control the depth of water at the Santan facility with the typical operational depth above the planting media being 15 to 30 cm (0.5 to 1 foot).

Bed depth of subsurface flow (SSF) constructed wetland is typically the most important factor in system cost. The Water Pollution Control Federation (1990) recommends a bed depth of 30 to 90 cm (1 to 3 feet). European designers who have applied this technology to hundreds of systems (Cooper, 1990) recommend a bed depth of about 60 cm (2 feet). Green and Upton's (1994) estimate of a bed width requirement of about 0.4 m per m^3/d of flow for tertiary treatment is based on a bed depth of 60 cm (2 feet) and the use of 5 to 10 mm (0.2 to 0.4 inches) gravel with a bed slope less than 5 percent and a steady state hydraulic conductivity of 1×10^{-3} m/s. Recommended bed widths for secondary treatment of settled wastewater are wider at 0.85 to 2 m per m^3/d (Cooper, 1990).

Soils/Substrate

Surface flow or free water systems usually use on-site soils as a substrate for plant growth. A constructed wetland can be built on almost any soil type and on gravel, but preferred soils are loams and sands because of the ability of plants to develop extensive root systems and to propagate through rhizome development. Loamy soils are advantageous because of their fertility and texture. Clays may have excellent fertility, but their texture hinders root penetration and diffusion

of oxygen and other gases to and from the roots. Preferred wetland construction includes from 15 to 30 cm (0.5 to 1 foot) of loamy or sandy topsoil within the wetland to provide an adequate substrate for the rooting of wetland plants (Knight *et al.*, 1995). Suitable topsoil (medium to sandy textured) should be used for a FWS at the Santan facility.

Substrate conditions are much more critical to the design of SSF wetlands than they are to SF systems. Subsurface flow wetlands have been constructed with substrates ranging from coarse sands to pea gravels with diameters of less than 1 cm (0.4 inch) to large rocks (up to 10 to 15 cm [4 to 6 inches] in diameter). Excessive fines associated with SSF substrate can result in hydraulic failure and should be avoided. Media permeability must be determined to permit appropriate design. If permeability is not determined correctly or the design is inadequate, surface flows will result. Gravel should be used at the Santan facility if an SSF system is desired. The gravel should be about 2.5 cm (1 inch) in diameter. This same gravel should be used as the planting media if the "hybrid" system is chosen.

Liner Requirements

Underlying soil permeability must be considered in the design of a constructed wetland. The most desirable soil permeability is less than 10^{-6} to 10^{-7} m/s (0.14 to 0.014 inches/hr). Lining is sometimes needed to decrease soil permeability and thus reduce seepage losses through the bottom of the wetland. Lining can consist of installing artificial materials, such as a geomembrane, or placing a layer of less permeable soils in the bottom of the wetland. Mechanical compaction of existing or imported soils can also be effective in creating a less permeable barrier to seepage.

Generally, liners will be required for constructed wetlands receiving primary wastewaters (including SSF systems receiving septic tank effluents), but not for systems receiving secondary or tertiary quality wastewaters. Systems designed with multiple cells may only require liners in those cells receiving primary effluent. If the effluent discharged from one cell to another is of secondary quality or higher, a liner may not be required in the downstream cells.

A liner also may be used to prevent excessive loss of wastewater that is intended for some other beneficial use, such as landscape irrigation or wildlife habitat. In these cases, lining may be partial to reduce infiltration through particularly permeable site soils and may be accomplished by adding less permeable subsoils or top soils to portions of the site.

A liner will add significant cost and, in some instances, may hamper performance of the system. At some sites where site and/or soil characteristics can be demonstrated to perform hydrologically like a liner, no liner may be required (Knight *et al.*, 1995). Existing soils in the cells at the Santan facility are fairly tight and typically these should seal over time. Possible loss of water to the ground could be checked if desired to verify actual conditions. This could be achieved by installation of monitoring wells or the use of neutron probe monitoring or some combination of these two techniques.

High length-to-width ratios are useful to minimize short-circuiting. However, Knight *et al.* (1995) recommend ratios of 1:1 to 2:1 because of the increased cost of construction resulting from increasing the ratio of berm to volume to treatment area. They also recommend the use of deep zones or low parallel berms to help reduce short circuiting. Their suggestions on design did not address the issue of maintaining access for the control of mosquitoes.

The cost for a constructed surface flow wetland is about $32,600/ha ($13,200/ac), while subsurface flow systems are about $350,000/ha ($141,000/ac) (Knight *et al.*, 1995).

V. PLANT MATERIALS OPTIONS

Although a wide variety of aquatic plants have been planted in constructed wetlands, the most commonly used plants in free water surface constructed wetlands for wastewater treatment are *Typha* sp. (cattail), *Scirpus* sp. (bulrush), and *Phragmites australis* (common reed). Less commonly used are *Juncus* sp. (rushes) and *Carex* sp. (sedges). The three major species spread rapidly, provide large surface areas for microbial attachment, and have high potential for pollutant removal that is well-documented. Cattail and bulrush species are commonly used in free water surface wetlands in the United States while common reed is used most in Europe.

Species of bulrush have the greatest wildlife habitat potential. However, three-square bulrush has been observed as possibly impeding the free movement of *Gambusia*, thus creating enhanced conditions for mosquitoes. Cattail provide somewhat lower habitat value, while common reed has little habitat value. *The Arizona Guidance Manual* (Knight *et al.*, 1995) provides an extensive listing of other Arizona plant species with potential for use in constructed wetlands (Appendix A). Most of these plants would be difficult to obtain and little, if any, documentation exist on the suitability and effectiveness of these other species for water quality improvement. Below is a discussion of pros and cons of the major plant genera as presented in Reed *et al.* (1995):

> **Cattail:** Typical varieties: *Typha angustifolia*, narrow-leaf cattail; *T. latifolia*, broad-leaf cattail. Distribution: worldwide. Optimum pH: 4-10. Salinity tolerance: narrow leaf, 15-30 ppt; broad leaf, < 1 ppt. Growth: rapid, via rhizomes, spreads laterally, dense cover in < 1 yr with plant spacing 0.6 m (2 ft). Relatively shallow root penetration in gravel ≈0.3 m (1 ft). Annual yield: ≈30 (dw) mt/ha (14 tons/ac). Tissue: (dw basis) ≈45% C, 14% N; 2% P; 30% solids. Habitat values: seeds and roots a food source for water birds, muskrat, nutria, and beaver; nesting cover for birds. Hydroperiod: can be permanently inundated >0.3 m (1 ft), can also tolerate drought. Commonly used on many FWS and

SF wetlands in the United States. The relatively shallow root penetration is not desirable for SF systems without adjustment in design depth of the bed. (page 179)

Bulrush: Typical varieties: *Scirpus acutus*, hardstem bulrush, common tule; *S. cypernius*, wool grass; *S. fluviatilis*, river bulrush; *S. robustus*, alkali bulrush; *S. validus*, soft-stem bulrush; *S. lacustris*, bulrush. Distribution: worldwide. Optimum pH: 4-9. Salinity tolerance: hardstem, wool grass, river, soft stem: 0-5 ppt, alkali, Olney's, 25 ppt. Growth: alkali bulrush, wool grass, river bulrush moderate, dense cover in 1 yr with plant spacing 0.3 m (1 ft); all others moderate to rapid, dense cover in 1 yr with plant spacing 0.3-0.6 m (1-2 ft). Deep root penetration in gravel ≈0.6 m (2 ft). Annual yield: ≈20 (dw) mt/ha (9 tons/ac). Tissue: (dw basis) ≈18% N; 2% P; 30% solids. Habitat values: seeds and rhizomes a food source for many water birds, muskrat, nutria, and fish; nesting area for fish when inundated. Hydroperiod: can be permanently inundated, hardstem up to 1 m (3 ft), most others 0.15-0.3 m (0.5-1 ft), some can tolerate drought conditions. Commonly used on many SF constructed wetlands in the United States. (page 179)

Reeds: Typical varieties: *Phragmites australis*, common reed, wild reed. Distribution: worldwide. Optimum pH: 2-8. Salinity tolerance: <45 ppt. Growth: very rapid, via rhizomes, lateral spread ≈1 m/yr (3 ft/yr), very dense cover in 1 yr with plants spaced at 0.6 m (2 ft). Deep root penetration in gravel ≈0.4 m (1.5 ft). Annual yield: ~40 (dw) mt/ha (18 tons/ac). Tissue: (dw basis) ≈45% C, 20% N; 2% P; 40% solids. Habitat values: low food value for most birds and animals, some value as nesting cover for birds and animals. Hydroperiod: can be permanently inundated, up to ≈1 m (3 ft), also very drought resistant. Considered by some to be an invasive pest species in natural wetlands in the United States. Very successful utilization at constructed wastewater treatment wetlands in the United States. The dominant species used for this purpose in Europe. Because of its low food value, this species is not subject to the damage caused by muskrat and nutria that has occurred in constructed wetlands supporting other plant species. (pages 179-180)

Rushes: Typical varieties: *Juncus articulatus*, jointed rush; *J. balticus*, Baltic rush; *J. effusus*, soft rush. Distribution: worldwide. Optimum pH: 5-7.5. Salinity tolerance: 0-<25 ppt depending on type. Growth: very slow, via rhizomes, lateral spread <0.1 m/yr (<0.3 ft/yr), dense cover in 1 yr with plants spaced at 0.15 m (0.5 ft). Annual yield: 50 (dw) mt/ha (45 tons/ac). Tissue: (dw basis) ≈15% N; 2% P; 50% solids. Habitat values: food for many bird species, roots food for muskrat. Hydroperiod: some types can sustain permanent inundation up to <0.3 m (1 ft), prefers dry-down periods. Other plants better suited as the major species for wastewater wetlands; rushes are well suited as a peripheral planting for habitat enhancement. (page 180)

Sedges. Typical varieties: *Carex aquatilis*, water sedge; *C. lacustris*, lake sedge; *C. stricata*, tussock sedge. Distribution: worldwide. Optimum pH: 5-7.5. Salinity tolerance: <0.5 ppt. Growth: moderate to slow, via rhizomes, lateral spread <0.15 m/yr (0.5 ft/yr), dense cover in 1 yr with plants spaced at 0.15 m (0.5 ft). Annual yield: <5

(dw) mt/ha (<4 tons/ac). Tissue: (dw basis) ≈1% N; 0.1% P; 50% solids. Habitat values: food source for numerous birds and moose. Hydroperiod: some types can sustain permanent inundation, others need a dry-down period. Other plants are better suited as the major species for wastewater wetlands; sedges are well suited as a peripheral planting for habitat enhancement. (page 180)

Floating Species: The species most likely to occur incidentally in FWS wetlands are *Lemna* sp. (duckweed). The presence of duckweed on the water surface of a wetland can be both beneficial and detrimental. The benefit occurs because the growth of algae is suppressed; the detrimental effect is the reduction in transfer of atmospheric oxygen at the water surface because of the duckweed mat. The growth rate of this plant is very rapid, and the annual yield can be 20 (dw) mt/ha (18 tons/ac) or more. The tissue composition is: (dw basis) ≈6 N, ≈2% P; 5% solids. Salinity tolerance: <0.5 ppt. Habitat values: food source for ducks and other water birds, muskrat, and beaver. The presence of duckweed on FWS wetlands cannot be prevented, since the plant also tolerates partial shade. Open-water zones in FWS wetlands should be large enough so that wind action can periodically break up and move any duckweed mat to permit desirable reaeration. The decomposition of the unplanned duckweed may also impose an unexpected seasonal nitrogen load on the system. (page 181)

A key to successful plant establishment of the species noted above is the propagation of these plants from good rhizomes or seedlings. In addition, it is critical that these be planted between April and September, with spring planting times significantly superior to fall. After planting, the plants must be kept in wet soil without deep flooding (usually 5 to 15 cm [2 to 6 inches]). If the small propagules are inundated too deeply, they will not develop.

Plant materials typically come in a variety of forms:

- container-grown plants
- wild-harvested material
- existing facilities
- bare root stock
- seed

Typically prices for plant materials are:

- Herbaceous species, bare root: $0.35 to $0.70
- Woody species: $0.40 (15 cm [~6 inches]) to $41.00 (3 m [10 foot])

Container-grown materials offer several advantages over other plant materials:

- Minimal transplant shock because the root system remains intact
- Better growth rate because the entire plant remains intact
- Greater flexibility in planting time because the plant undergoes minimal shock

Note that on a per acre basis, the cost for plants is from $2,000 to $5,000 per acre depending on the species of plant materials used, the method of planting, time of year, and performance guarantee requirements.

Recommended plant spacing for bulrush, cattail, and common reed is typically 1 m (3 feet) between transplants, whether they be root balls or rhizomes. Operational water depth is typically 15 to 30 cm (6 to 12 inches). Deep zones 2 m (6 feet) in depth can be used to help mix the flow within the individual cells. These zones, if they are perpendicular to the flow of long and narrow ponds, can also provide access as well as habitat for *Gambusia* and thus facilitate mosquito control. These deep areas need to be greater in width than the emergent vegetation or >6 m (18 feet).

No full-scale system has been built to use submerged aquatic plants (Etnier and Guterstam, 1997) and there are little data for designing systems based on submerged plants as a major component of the system (Etnier and Guterstam, 1997; Reed *et al.*, 1995). Species studied for these systems include: pennywort (*Hydrocotyle umbellata*) (the most commonly studied plant), pondweed (*Potamogeton amplifolius)*, water-milfoil (*Myriophyllum heterophyllam*), hornwort (*Certophyllum demersum*), and fanwort (*Cabomba caroliniana*). Guntenspergen, *et al.* (1989)

reported that *Egeria densa*, *Elodea nuttalii* and *Myriophyllum aquaticum* were tested for use in constructed wetlands.

The following submergent species are found in Arizona (Knight *et al.*, 1995):

Common Name	Scientific Name
Arrow-head	*Sagittaria cuneata*
Horned-pondweed	*Zannichellia palustris*
Hornwort	*Ceratophyllum demersum*
Naiad	*Najas maritima*
Pondweed	*Potamogeton crispus*
Pondweed	*Potamogeton foliosus*
Water buttercup	*Ranunculus aquatilus*
Water-milfoil	*Myriophyllum sibiricum*
Water-weed	*Elodea canadensis*

Submergent plants listed for use at the Sweetwater Wetlands in Tucson were *Potamageton* spp. and *Ceratophyllum* spp.

Currently, plants adaptations to their environment as well as their effects on water quality are only beginning to be understood. Submerged plants only grow well in oxygenated water and so their use in wastewater with a high organic content likely would be limited. Nevertheless, some submergent species likely would do well in various zones of the deep areas of the "hybrid" and traditional systems. The most likely candidates are unknown. It is suggested that the availability of plant material as listed above from local sources used as the determining criteria for species selection.

Some potential wetland plant species are regulated as noxious weeds. None of the recommended species are found on the list as of the date of this report. Appendix B contains a listing of the noxious weeds and noxious weed regulations.

Plant materials and information may be obtained from:

Western Sods Arid Adapted Revegetation
P.O. Box 10610
Casa Grande Arizona 85230
Mobile Phone: (602)320-1232
Phoenix phone: (602)268-8811 or 1-800-832-8873
Fax: (602)836-2146

Aquatic and Wetland Nurseries
9999 Weld County Road 25
Fort Lupton, Colorado 80621
Phone: (303)857-6157
Fax: (303)857-2455
- OR -
P.O. Box 82
Avondale, Arizona 85323

VI. MOSQUITOES

Introduction

In North America north of Mexico, there are now known to be 171 species of mosquitoes. These insects are important because they are not only pests, but also they are vectors for diseases such as eastern encephalitis, St. Louis encephalitis, dengue fever, malaria, and filariasis (Darsie, 1997).

Mosquito Production

Mosquito species of Arizona occupy an array of habitats and environmental conditions. Habitats for larval mosquitoes include lake edges, ponds, ditches, bogs, swamps, marshes, springs, snowmelt pools, rock pools, slow reaches of streams, floodwater or overflow depressions, tree holes, and containers (e.g., artificial containers such as rain barrels, cans, and tires) (Laird, 1988). The major requirement for mosquito larval development is standing water, the duration of which can be as little as one week. Food and protective cover are also critical. The high reproductive rate of the mosquito can rapidly bring about nuisance levels (Tennessen, 1993).

Mosquitoes are common in natural wetlands, so their presence in constructed wetlands is to be expected. The availability of standing water, high nutrient levels, and plant cover in constructed wetlands offers an ideal medium for larval growth. Anaerobic, bacteria-laden water has been found to be attractive to ovipositing females (Gerhard, 1959; Rockett, 1987). The potential for mosquito problems in nutrient-enriched constructed wetlands and the annoyance and vector capabilities of some species require consideration of alternatives for mosquito control early in the design and operation process.

In Arizona around the turn of the century, many wetland areas that provided suitable aquatic habitats for a variety of mosquito species were eliminated. This occurred as rivers and streams were driven underground by excessive pumping of groundwater. However, with the rapid growth of population in recent years, many ponds, lakes and other areas suitable as mosquito habitat are being created.

The diversion of stormwater can both dump pollutants into riparian systems and also greatly diminish the amount of stormwater that enters recharge areas for replenishing the groundwater. To alleviate these water quality and supply problems, various types of stormwater detention/retention areas are being incorporated into new commercial and residential developments. Some established developments also are retrofitted with stormwater retention and detention systems. The widespread use of these stormwater systems also may lead to increased mosquito production unless adequate precautions are taken (O'Meara and Purcell, 1993).

In Arizona, detention ponds for holding stormwater runoffs usually do not produce mosquitoes in sufficient numbers to cause major problems because they rapidly dry out. A similar type of invasion can occur in detention ponds that receive both stormwater and wastewater. Wide fluctuations in water levels, especially when they are frequent events, may make the detention system a suitable habitat for floodwater mosquitoes. Floating and rooted aquatic plants may foster the growth of some populations of mosquitoes (O'Meara and Purcell, 1993).

Although stormwater entering retention systems is supposed to percolate into the ground within 72 hours, retention areas often remain wet for longer periods. Floodwater mosquitoes are normally the first to appear in retention areas. Later in the rainy season, it is not uncommon to

find *Culex* spp., especially if grass cuttings have been accumulating in these areas (O'Meara and Purcell, 1993).

Overall, abundant populations of pest and disease-vectoring mosquitoes are much more frequently associated with retention systems than they are with detention systems. Moreover, it is much easier to achieve long-term mosquito abatement in detention areas. Retention systems, however, are much more effective for improving water quality than are mere detention systems. Therefore, water management experts often recommend the installation of retention systems for new developments.

In Arizona, an additional consideration in regard to mosquitoes and constructed wetlands is the possibility that the presence of the dense vegetation itself in the wetland cells will act as an attractant for adult mosquitoes. Thus, even if the development of larvae is controlled by design and/or application of larvicidal agents, there could be some additional adult mosquitoes in and around the wetland.

Control Considerations

Local mosquito control programs should be actively involved in the planning and approval stages for all new stormwater management schemes. If retention areas are placed at these sites, then a dual retention/detention system might be the best approach for both stormwater management and mosquito abatement. With proper design and construction, excess water in the retention part of the system can be sent to the detention pond, thus reducing the chances for mosquito production (O'Meara and Purcell, 1993).

Detention ponds should receive only stormwater. Banks on detention ponds should be steep, but not too steep to hinder mowing and other maintenance activities. Deeper ponds are preferable to shallow ones (O'Meara and Purcell, 1993).

Weed control around ponds is important and proper maintenance procedures should be followed to prevent possible mosquito breeding areas. The presence of a mechanical aerator, such as a fountain in the middle of the pond, often makes the site more visually attractive, deters the growth of unwanted vegetation, and makes the habitat more suitable for fish (O'Meara and Purcell, 1993).

The bottoms of retention areas should be free of depressions where water might accumulate and remain for periods sufficient to allow mosquito production. Mowing and other maintenance operations should be done without producing ruts. Grass cuttings and other types of debris should be removed from retention areas. Long-term responsibilities for proper maintenance of retention areas should be clearly stipulated (O'Meara and Purcell, 1993).

Once a retention system has been installed at an inappropriate location (e.g., on a site where the water table is too close to the surface), not much can be done to change the situation without eliminating the system. Under these conditions, mosquitoes must be controlled with larvicide. For a larvicide operation to be effective, it must be supported with a quality inspection program. The widespread occurrence of potential mosquito breeding sites in retention areas greatly increases the costs and man-power needs of inspection programs. Perhaps, through educational programs directed at the general public, we could generate more service requests for the control of mosquito larvae and fewer for adult mosquito control (O'Meara and Purcell, 1993).

The mosquito problems generated by various types of detention/retention systems, their solutions and control costs, should not be neglected when local governments are in the process of creating stormwater utilities. However, these items probably will receive adequate attention only if representatives of the local mosquito control district actively participate in the design phase (O'Meara and Purcell, 1993).

The abundance of organic matter and the presence of high populations of microorganisms found in a constructed wetland appears to be a factor impacting mosquito population densities. Higher population densities of mosquitoes appear to be present in constructed wetlands compared to natural wetlands (Tennessen, 1993). The species found in greatest abundance is the genus *Culex*. They are called "filth breeders" because they are known to be attracted to the presence of high levels of organic material in wastewater (O'Meara and Evans, 1983). *Culex* ssp. will do well in high-quality treated-effluent or in stormwater if the water is present for an extended period of time.

In areas controlled by the Tennessee Valley Authority, a level of 0.25 larvae per dipper sample near human residences usually results in a request to apply adulticide (Tennessen, 1993). The presence of high populations of *Gambusia affinis* (mosquito fish) as well as invertebrate predators did not remove the problem with mosquitoes in studies conducted in Kentucky (Tennessen, 1993).

Some problems with controlling mosquitoes in a constructed wetland can be readily overcome during the initial engineering of the system. Narrow paths between cells should be widened to facilitate movement around the cells. These would permit better access around cells so that mowing or other heavy equipment could control tall weeds that tend to deflect application

materials from backpack blowers. Large cells tend to be more difficult to treat, thus increasing costs. Slug injection of insecticide would probably save effort, but it would require that dispersal of the material be adequate and reasonably uniform (Tennessen, 1993).

There is also potential for breeding "nuisance mosquitoes" in large numbers. "Floodwater mosquitoes," which include species in the genera *Psorophora* and *Aedes*, breed in areas where the ground is periodically flooded and re-flooded. Even though these mosquitoes are not disease vectors, they can be an annoyance to residents by virtue of their large numbers. The "arid wetland" cells will receive water periodically (up to 10 cm [4 inches] deep) to maintain soil saturation. The periodic soaking of soil may create large populations of floodwater mosquitoes as is known to occur in many desert areas.

The construction of a typical wetland will likely create habitat for "permanent water breeding mosquitoes" such as *Culex* and *Anopheles* species. These permanent water mosquitoes prefer breeding in shallow water with emergent vegetation that will be abundant through out any surface wetland. *Culex* mosquitoes, especially *Culex tarsalis*, is a known vector for mosquito-borne encephalitis viruses, including St. Louis encephalitis (SLE) and western equine encephalitis (WEE). Both of these viruses may be pathogenic to humans, and WEE is also pathogenic to horses. Both of these viruses have been isolated in mosquitoes collected in Maricopa County in past years (Table 1). A wetland will also attract birds to the area, and many birds serve as carriers of encephalitis virus and thus provide the source of virus to local mosquito populations. The proximity of these systems to development increases the public health concern (Levy, 1994).

With these concerns in mind, it is necessary to incorporate an effective mosquito surveillance and control program into the plan. Some of the mosquito prevention options include

Table 1. Maricopa County Mosquito Species.

Species	Vector Capability[a]	Other
Anopheles franciscanus		
Aedes dorsalis *Aedes nigromaculis* *Aedes vexans*	CE, EEE, WEE	Dog heartworm
Culex peus *Culex quinquefasciatus* *Culex tarsalis* *Culex thriambus*	SLE, WEE CE, SLE, WEE	
Culiseta incidens *Culiseta inornata*	JBE, SLE, WEE	
Psorophora confinnis[b] *Psorophora signipennis*		

[a] CE: California group Encephalitis
JBE: Japanese B Encephalitis
EEE: Eastern Equine Encephalitis
SLE: St. Louis Encephalitis
WEE: Western Equine Encephalitis

[b] These species lay their eggs on the ground. The eggs can lie dormant for months or years and hatch readily in the presence of water.

Sources:

1. G.A. Moshiri (ed.), *Constructed Wetlands for Water Quality Improvement*. Lewis Publishers, Boca Raton, Florida. 1993. p. 598.
2. T.G. Engethaler, Maricopa County Vector Control, Written communication. Phoenix, Arizona. 1995.
3. R. Matheson, *A Handbook of the Mosquitoes of North America*. Charles C. Thomas Publisher, Springfield, Illinois. 1929. p. 34.

modifying the habitat to prevent successful breeding, such as creating steeper banks, deeper water, and/or faster water flow or movement, etc. However, since these modifications would adversely affect the primary function of the project to treat wastewater, these alternatives are not an option (Levy, 1994).

Another option is to introduce natural controls into the habitat such as mosquito-eating fish, but the use of fish alone in the wetland/cells would not be sufficient to prevent all mosquito breeding. Successful mosquito control using fish is contingent upon (1) introducing an effective larvivore such as mosquito fish (*Gambusia affinis*), and (2) that the fish have easy access to the mosquito larvae. In the Tres Rios wetland/cells, the presence of emergent vegetation has reduced or denied accessability of fish to many isolated pockets of mosquito larvae. Also, the plan is contradictory in that it calls for introducing *Gambusia* into the wetland/cells, but also suggests using only native Arizona species. *Gambusia affinis* is not only an introduced species, but it tends to out-compete native Arizona fish such as top-minnow and pup fish. Unfortunately, using native fish species for mosquito control, such as pup fish or top minnow, is even less effective than *Gambusia* due to differences in feeding habits among the species. This does not preclude the introduction of fish (native or non-native) into the cells. It only suggests that fish alone will not control the mosquito problem (Levy, 1994).

The best (if not only) option/strategy to address the mosquito issue is to incorporate a plan that involves regular monitoring and control of mosquito breeding. Mosquito breeding should be checked weekly (preferably) by conducting "larval dipping surveys" and following up with application of an appropriate larvicide where breeding is found. A pupaecide, Altosid®, was used in Arcata, California, to control mosquitoes (Rogers, 1997). Altosid® is a sustained release

mosquito growth regulator that prevents adult mosquito emergence. This product is manufactured by Zoecon Corporation, Dallas, Texas. Altosid® should be not be applied to known fish habitat.

Another option is 5 percent Skeeter Abate®, an insecticide that is used for control of mosquito and midge larvae. This material is manufactured by Clarke Mosquito Control Products, Inc., Roselle, Illinois (1-800-323-5727). Skeeter Abate® can be toxic to birds, fish and other aquatic organisms. However, when applied at labeled rates, it has been shown not to affect non-target species and is approved for use in drinking water.

Larvicides with BTI (*Bacillus thuringiensis israeliensis*) are both effective and selective in killing mosquito larvae without affecting other aquatic invertebrates. BTI comes in granule, pellet, and liquid formulations. The granules and pellets can be applied safely and easily without expensive equipment. Other larvicide options are also available including growth regulators and mosquito larviciding oils. Whatever control measures are used, efficacy of larvicide treatments should be checked with post-treatment dipping surveys (Levy, 1994).

A recently developed alternative, *Bacillus sphaericus* (BS), has been produced by Abbott laboratories and is being tested in the metropolitan Phoenix area.

Developing an efficient and effective larviciding program will be easier and cheaper than developing a mosquito adulticiding program. However, an effective larviciding program is contingent upon (1) having access to mosquito breeding areas, (2) having staff and time available to conduct surveys and apply larvicides, and (3) having a budget for purchasing pesticide. The large area involved may require one half-time employee and sufficient larvicide to treat up to 16 acres every two weeks. The dense growth of vegetation such as cattail and bulrush may eventually

hamper mosquito surveillance and control efforts, so measures should also be taken to maintain accessability to shallow water environments (Levy, 1994).

Various other agents, such as Malathion and Pyrethrins, are available for control of adult mosquitoes. According to Clarke, Mosquito Control Products, Inc., Dursban® (ultra low volume), an adulticide, has been used successfully and is one of the least toxic organophosphates. These products, however, would not eliminate the potential breeding within the wetland cells. Dursban® also has been used as a prehatch preventative for mosquito larvae in detention basins (Melvin, 1998).

The public health and nuisance concerns associated with mosquito breeding are important issues, and they must be addressed (Levy, 1994).

For information regarding mosquitoes, contact

Arizona Department of Health Services
Disease Prevention Services
Vector-borne and Zoortic Disease Section
3815 North Black Canyon Highway
Phoenix Arizona 85015
(602)230-5918 or (602)230-5919

Department of Environmental Services
Division of Field Services
Office of Vector Control
4707 East Washington
Phoenix Arizona 85034
(602)273-0895

VII. RECOMMENDATIONS

Wetland Design

Three options are presented for the Santan facility and each of these is briefly discussed as to the pros and cons of the particular design option. It is recommended that two of the three design options be used at the site with the understanding that one of the systems might have to be rebuilt. If the final decision is not to build two different wetlands, then the first option listed below is suggested.

The recommended option is to create a "hybrid system" that will have the desired surface flow wetland appearance with the potential mosquito control ability of a subsurface flow wetland. This system would typically be operated as a surface flow wetland with water 15 to 30 cm (6 to 12 inches) above the gravel surface (Figure 1) with the side slope as regular and steeply sloping as possible. Planting beds would be about 30 m (100 feet) in width and alternating deep zones would be about 13 m (40 feet) in width. If mosquito larvae become a problem, water levels would be reduced to approximately 5 to 10 cm (2 to 4 inches) below the surface level of the gravel media. This lower water level should eliminate areas of exposed water covered by dense vegetation and thus prime mosquito breeding habitat also would be eliminated. Treatment would still occur as water flowed through the planted gravel beds placed on the ridges of the wetland beds. *Gambusia* would retreat to deep water zones and mosquito larvae should be vulnerable in the open water of the deep zones. If clogging occurs in the gravel or more flow is required, water flow through pipes or another water conveyance set in the ridges along alternating sides of the wetland planting beds could be controlled with a valve or other flow device. Water would move from compartment to compartment, maintaining flow throughout the system. Again, this design

Figure 1. "Hybrid" Free Water Surface/Subsurface Flow Wetland System.

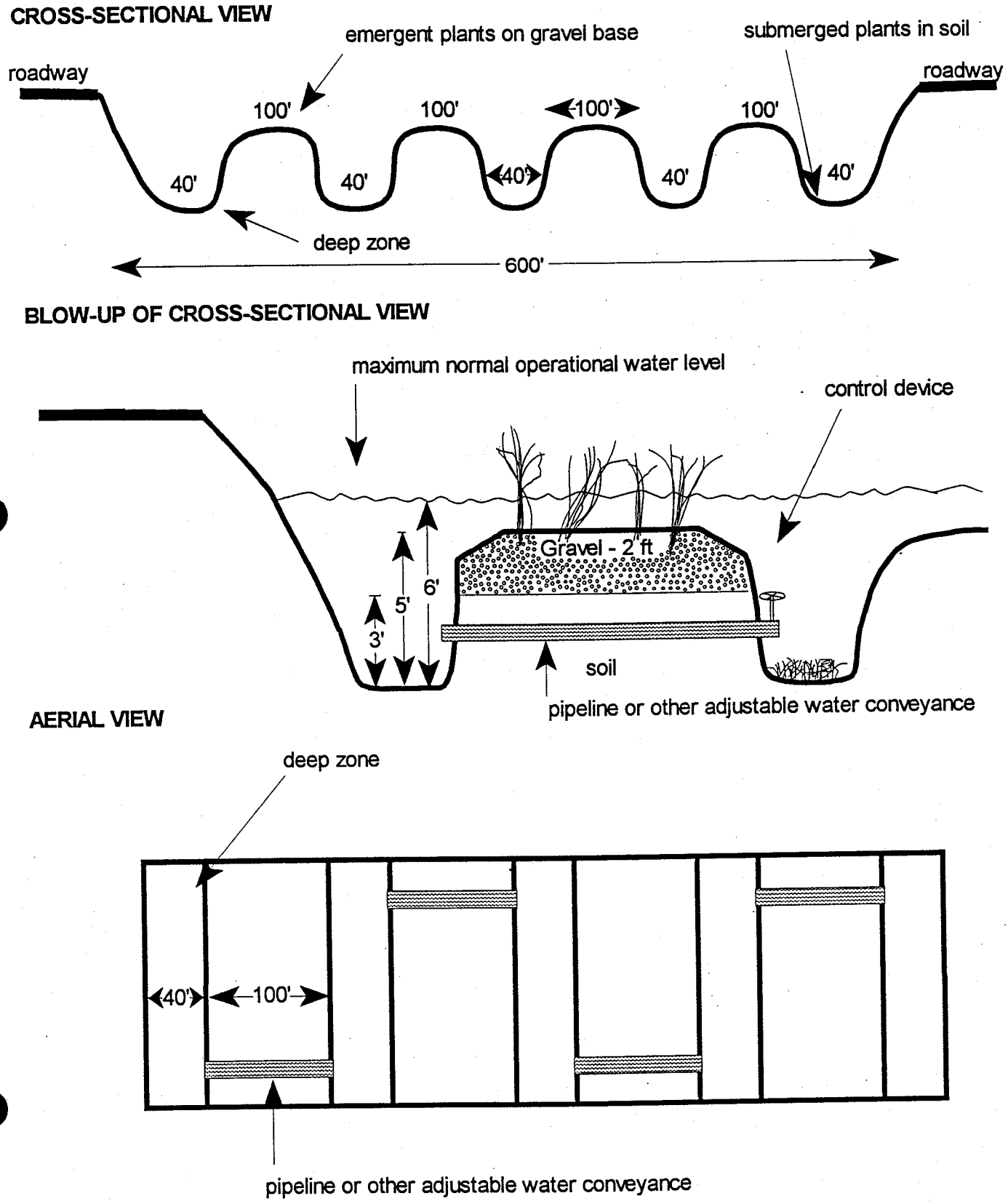

would provide the appearance of a surface flow system with the potential benefit of maximum ability to control the development of mosquito larvae, although at a somewhat diminished treatment capacity. This system is currently under development and study at the Constructed Ecosystems Research Facility in Tucson.

The second option is to construct a typical surface flow wetland with three deep zones placed at intervals of about 50 m (150 feet) with smaller open areas at the influent and effluent points. The shallow emergent zones would operate at 15 to 30 cm (6 to 12 inches) of water depth. The deep zones would be about 25 m (75 feet) in width and 1 to 1.5 m (4 to 6 feet) in depth set perpendicular to the water flow. This option is more traditional and would provide maximum treatment. However, it is also the most likely to create the biggest mosquito breeding control problem.

The third option is to build an "arid wetland". This system is completely experimental in concept and design. It would provide the most creative option for the possible use of wetlands in the drier areas of Arizona where there is little if any supplemental water available to maintain a more traditional wetland system. In this option, plant species used would be those native to cienegas in the deserts of south central Arizona (see Plant section above for suggested species). Mosquito control is an unexplored issue although the ability to dry out the system should decrease concern about *Culex* spp. Floodwater mosquitoes are a possible concern although the use of Dursban® as a prehatch treatment might address this issue. This option, however, would preclude the possibility of storing significant amounts of water within the wetland cells during particularly wet periods since the plant species within the "arid wetland" could not withstand long periods of deep water (30 cm [12 inches]).

Plants

Emergent plants for the "hybrid" and surface flow wetland options should consist of the following species: *Scirpus validus* (soft-stem bulrush), *Phragmites australis* (common reed) and *Typha domingensis* (cattail). It is suggested that common reed be the predominant species in both the typical surface and "hybrid" systems. This is an agressive species that has been used extensively for constructed wetlands, especially in Europe. Although common reed is not considered a noxious weed in Arizona and is found growing in Maricopa County, it could escape. Cattail could be used in place of common reed if there were concerns about its escaping. Cattail likely will enter the system without being purposely planted. The use of another species such as soft-stem bulrush would provide diversity to the plant community. As noted previously, little is known about submergent species for the deep zones. It is recommended, therefore, that potential suppliers be asked about availability and planting recommendations for species listed previously in the section on plants.

Soil

In the "hybrid" system, plants will be placed in 2.5 cm (1 inch) gravel. The gravel depth would be 61 cm (2 feet) . In the traditional wetland, it is recommended that a medium to sandy textured soil be used.

Mosquito Control

Gambusia should be added to the system in both the "hybrid" and traditional options. *Gambusia* will not be appropriate for the "arid wetland". For the "arid wetland", mosquito control would be similar to other detention/retention ponds currently operated by Arizona Department of Transportation.

Monitoring/Research

Monitoring of water quality should be conducted to establish and document the effectiveness of the system option(s) chosen for implementation. Water samples should be taken at least monthly and as required by storm events (Table 2).

Routine Maintenance

Routine maintenance and operational activities should include the following:

1. Inspection for proper operation of all pumps and outflow gates as well as for appropriate water levels within the system [daily]
2. Removal or application of weed control agents for salt cedar, tumbleweed and other undesirable plant species [weekly during the growing season]
3. Mosquito larvae monitoring by dipping [weekly during the growing season (primarily during March through November)]
4. Application of larvicides to the wetland system [weekly or as needed during the growing season]
5. Cleaning of trash and debris [monthly]
6. Inspection of embankments and structural integrity for signs of erosion or animal habitation; check fencing and other equipment and structures [monthly]
7. Repairs to system components [as required]

Active and aggressive control of water weeds and undesirable plant species is vital. Every effort should be made to eradicate all salt cedar plants as soon as observed by physical removal, including the roots. Use a preemergent herbicide for control of most other weeds. However, if preemergent herbicide application is unsuccessful in stopping weed growth, other weeds growing

Table 2. Monitoring Parameters, Sampling Points and Suggested Frequency.

Parameter	Points	Suggested Minimum Frequency
Flow*	Inflow and Outflow	Daily
Water Stage*	In Each Cell	Daily
Biochemical Oxygen Demand (BOD_5)	Inflow and Outflow	Monthly/Following Each Event
Dissolved Organic Carbon (DOC)	Inflow and Outflow	Monthly/Following Each Event
Biodegradable Dissolved Organic Carbon (BDOC)	Inflow and Outflow	Monthly/Following Each Event
Total Suspended Solids (TSS)	Inflow and Outflow	Monthly/Following Each Event
pH	Inflow and Outflow	Monthly/Following Each Event
Dissolved Oxygen (DO)	Inflow and Outflow	Monthly/Following Each Event
Temperature	Inflow and Outflow	Monthly/Following Each Event
Conductivity	Inflow and Outflow	Monthly/Following Each Event
Nitrogen Species	Inflow and Outflow	Monthly/Following Each Event
Total Phosphorous	Inflow and Outflow	Monthly/Following Each Event
Chloride	Inflow and Outflow	Monthly/Following Each Event
Sulfate	Inflow and Outflow	Monthly/Following Each Event
Total and Fecal Coliform	Inflow and Outflow	Monthly/Following Each Event
Selected parasites and other microbial pathogens	Inflow and Outflow	Monthly/Following Each Event
Selected metals and other parameters	Inflow and Outflow	After Major Storm Events

* Equipment is available for remote monitoring of this parameter and for some of the other suggested parameters.

Safety and health concerns during sample collection are dependent on the types of contaminants in the stormwater. Metals and phosphorus, for instance, require caution in handling. They are skin irritants. Protection should be worn when handling contaminants like fecal coliform. Proper personal protection equipment is, therefore, recommended whenever water samples are collected.

along the banks also should be physically removed or killed while still small by the careful application of Roundup®.

Harvesting of the plant biomass within the wetland cells is not an annual routine maintenance item. When needed, burning is the easiest method to use. However, air quality problems within the Valley will likely preclude this option under most circumstances. Therefore, mechanical harvesting may be occasionally required. However, data on this do not exist and it is suggested that harvesting not be conducted as a routine maintenance activity.

It is estimated that about 20 hours per week would be required to operate and maintain the wetland system, and collect water samples. Typically, one individual could carry out these activities although additional assistance would be required periodically. It also might be beneficial to have 2 employees work as a team for a shorter period of time.

REFERENCES

Cooper, P.E. 1990. *European Design and Operations Guidelines for Reed Bed Treatment Systems*. Prepared by EC/EWPCA Emergent Hydrophyte Treatment Systems Expert Contact Group. Water Research Center: Swindon, United Kingdom.

Darsie, R.F. 1997. Web page: http://www.ifas.ufl.edu/~veroweb//TAXON.HTM.

Engethaler, T.G. 1995. Letter to Madeline Fong Goddard, P.E., Phoenix Water Services Department, concerning Tres Rios Demonstration Wetland Project.

Environet. 1997. Using constructed wetlands to improve urban stormwater quality. *Environmental Technology Case Study Directory*.

EnviroSense. 1997. Wet detention ponds to treat stormwater runoff. Tri-Services' Pollution Prevention Technical Library, Naval Facilities Engineering Service Center (NFESC).

Etnier, C. and B. Guterstam, eds. 1997. *Ecological Engineering for Wastewater Treatment*. CRC Lewis Publishers, Boca Raton, Florida. Pp. 82-83.

Ferlow, D.L. 1993. Stormwater runoff retention and renovation: A back lot function or integral part of the landscape? Pp. 373-379. In: G.A. Moshiri (ed.), *Constructed Wetlands for Water Quality Improvement*. Lewis Publishers, Boca Raton, Florida.

Gerhard, R.W. 1959. The influence of soil fermentation on oviposition site selection by mosquitoes. *Mosquito News 19*:151.

Green, M.B. and J. Upton. 1994. Constructed reed beds: A cost-effective way to polish wastewater effluents for small communities. *Water Environment Research 60*:188-192.

Guntenspergen, G.R., F. Stearns and J.A. Kadlec. 1989. Wetland vegetation. In: *Constructed Wetlands for Wastewater Treatment: Municipal, Industrial and Agricultural*, D.A. Hammer ed.. Lewis Publishers, Inc., Chelsea, Michigan.

Kadlec, R.H. and R.L. Knight. 1996. *Treatment Wetlands*. CRC Press, Lewis Publishers, New York, New York.

Knight, R.L., R. Randall, M. Girts, J.A. Tress, M. Wilhelm, and R.H. Kadlec. 1995. *Arizona Guidance Manual for Constructed Wetlands for Water Quality Improvement*. #TM95-1.

Laird, M. 1988. *The Natural History of Larval Mosquito Habitats*. Academic Press, London.

Levy, C.E. 1994. Letter to Madeline Fong Goddard, P.E., Phoenix Water Services Department, Wastewater Engineering Division, concerning potential mosquito problems at Tres Rios Wetland. January 12, 1994.

Melvin, C. 1998. Palo Verde Vector & Pest Control Inc. Phoenix, Arizona. Personal communication.

Olsen, R.K. 1993. *Created and Natural Wetlands for Controlling Nonpoint Source Pollution.* U.S. Environmental Protection Agency, Office of Wetlands, Oceans, and Watershed. CRC Press, Inc. Boca Raton, Florida.

O'Meara, G.F. and F.D.S. Evans. 1983. Seasonal patterns of abundance among three species of *Culex* mosquitoes in a south Florida wastewater lagoon. *American Entomology Society Annual 76*:130.

O'Meara, G.F. and R.E. Purcell. 1993. Mosquitoes and stormwater management. FMEL. Florida Medical Entomology Laboratory, Florida Cooperative Extension Service, Institute of Food and Agricultural Services. University of Florida and the State of Florida Department of Health and Rehabilitative Services.

Reed, S.C., R.W. Crites, and E.J. Middlebrooks. 1995. *Natural Systems for Waste Management and Treatment*. McGraw-Hill, Inc., New York.

Rockett, C.L. 1987. Bacteria as ovipositional attractants for *Culex pipiers* (*Diptera: Calicidae*). *Great Lakes Entomology 20*:151.

Rogers, C. 1997. Jones & Stokes Associates, Inc. Sacramento, California. Personal communication.

Schueler, T.R. 1992. *Design of Stormwater Wetland Systems: Guidelines for Creating Diverse and Effective Stormwater Wetlands in the Mid-Atlantic Region.* Anacostia Restoration Team, Department of Environmental Programs, Metropolitan Washington Council of Governments, Washington D.C.

Tennessen, K.J. 1993. Production and suppression of mosquitoes in constructed wetlands. Pp. 591-601. In: G.A. Moshiri (ed.), *Constructed Wetlands for Water Quality Improvement.* Lewis Publishers, Boca Raton, Florida.

Wass, R. 1998. Tres Rios Treatment Facility. Tolleson, Arizona. Personal communication.

Water Pollution Control Federation. 1990. *Natural Systems for Wastewater Treatment Manual of Practice*, FD-16. S. Reed (ed.). Washington, D.C. 270 pp.

APPENDICES

APPENDIX A

Selected Arizona Wetland and Riparian Plants

Table A. Selected Arizona Wetland and Riparian Plants.[a]

Common Name and Species	Growth Form/ Habit	Hydrologic Regime	Soil/Substrate	Geographic Range	Elevation	Frequency of Occurrence	Comments
Alder *(Alnus oblongifolia)*	TR/SH	HY	SI/CO	CP/CH	5000-7500	FR	Often forms tall closed-canopy riparian woodland but also forms thickets along less stable water courses checking erosion; A. tenuifolia occurs at higher elevations (7500-9500') in Arizona
Annual rush *(Juncus bufonius)*	AN	HY/ME	CL/SA-T	BR	<3000	FR	The only annual rush, often very abundant over large areas
Arizona walnut *(Juglans major)*	TR	HY/ME	SI/CO	CH	4000-6000	FR	Large deciduous tree forming shady groves along streams and on flood plains; suspected of releasing allelopathogens into the soil; seedlings available through the Arizona State Land Department
Arrow-grass *(Triglochin concinna)*	PE	HY	NP	CP	6000-7000	IN	Rushlike perennial of wet soil; T. maritima also occurs in Arizona
Arrow-head *(Sagittaria cuneata)*	EM/SU	HY/SE-AQ	CI/SA	CP/CH/BR	<7000	IN	Leafy perennial spreading by rhizomes in wet soil; leaves submerged when water is present; similar species of Arizona include S. graminea, S. latifolia, S. longiloba, and S. greggii
Arrow-weed *(Tessaria sericea)*	PE	HY	CL/SA-T	BR	<4000	FR	Similar to seep-willow (Baccharis salicifolia) in habit and belongs to the same family; flowers pale lavender; often placed within the genus Pluchea
Azolla *(Azolla filiculoides)*	FL	AQ	N/A	CH/BR	2000-4000	IN	Clones of small leaves often cover large surface areas; technically a fern but similar in habit to the flowering plant Lemna (duck-weed)
Betony *(Stachys coccinea)*	PE	HY/ME	SI/CO	CH/BR	<8000	FR	Very attractive perennial with dark green leaves and bright red flowers; easily propagated; available from local nurseries
Bulrush *(Scirpus acutus)*	EM/PE	SE/HY	NP	CP/CH/BR	2500-9000	FR	Spreads by thick rhizomes forming dense tule-like masses of dark green terete stems generally ca. 2m tall (up to 5m); easily propagated by rhizomes; similar species or commonly-used synonyms include S. californicus (< 3500') and S. validus (2500-9000'); S. pallidus (<9000), S. americanus (< 6000'), and S. olneyi (< 7000,) have three-edged stems

Table A. (Continued)

Common Name and Species	Growth Form/ Habit	Hydrologic Regime	Soil/Substrate	Geographic Range	Elevation	Frequency of Occurrence	Comments
Bulrush *(Scirpus paludosus)*	EM/PE	SE/HY	NP	CH/BR	<5000	IN	Habit similar to sedges, generally < 1m tall
Button-bush *(Cephalanthus occidentalis)*	SH	HY/ME	SI/SA	CH/BR	<5000	IN	Handsome shrub to 2.5m tall with large leaves; prefers wet soil along streams
Cattail *(Typha domingensis)*	EM/PE	SE/HY	NP	CP/CH/BR	<4000	FR	Easily established, fast growing perennial spreading by rhizomes forming extensive thickets (tules) in shallow (< ca. 1m) water or mud; very important waterfowl habitat; seeds are wind- disperses en masse; shoots above ground die back each year
Cattail *(Typha latifolia)*	EM/PE	SE/HY	NP	CH/BR	3500-7500	IN	Very similar to T. dominguensis but occurs generally at higher elevations within Arizona
Columbine *(Aquilegia chrysantha)*	PE	HY/ME	SI/SA	CP/CH/BR	>3000	FR	Large showy bright green leaves and yellow flowers; shade tolerant; rhizomes easily divided and transplanted; this is the most common and widespread species but several others occur in Arizona
Cottonwood *(Populus angustifolia)*	TR	HY/ME	NP	CP/CH	5000-7000	FR	More similar in appearance to some willows (Salix) than to P. fremontii; P. acuminata is a species morpholocally intermediate between P. angustifolia and P. fremontii
Cottonwood *(Populus fremontii)*	TR	HY	NP	CH/BR	<6000	FR	Common and abundant deciduous tree with a large canopy; fruit wind-dispersed en masse
Coyote willow *(Salix exigua)*	SH	HY	SI/CO	CP/CH/BR	<9500	FR	Deciduous shrub spreading by rhizomes forming extensive tule-like areas along perennial waterways; easily propagated from shoots of the previous year
Duckweed *(Lemna gibba)*	FL	AQ	N/A	CP/CH/BR	<7000	FR	Often covers large surfaces of still or slow moving water; easily transplanted by casting a few live individuals; grows rapidly; an important species for waterfowl; although other species of the genus occur in Arizona, this is the most common and easily recognized; L. minor is also common

Table A. (Continued)

Common Name and Species	Growth Form/ Habit	Hydrologic Regime	Soil/Substrate	Geographic Range	Elevation	Frequency of Occurrence	Comments
Flat-sedge *(Cyperus niger)*	PE	HY/ME	SI/SA	CP/CH/BR	3000-7000	FR	One of the more common of ca. 25 species of the genus that occur in Arizona; similar in habit to the true sedge (Carex) but not as important in terms of bank stabilization
Godding willow *(Salix gooddingii)*	SH/TR	HY	SI/CO	CH/BR	<7000	FR	Common and abundant, often large deciduous tree of Arizona's middle and lower elevations; easily propagated from stems ca. 1" in diameter
Heliotrope *(Heliotropium curassavicum)*	PE	HY/ME	CL/SA-VT	CH/BR	<5000	FR	A low dark green succulent with small white flowers; often abundant but not usually dense
Hierba-mansa *(Anemopsis californica)*	PE	SE/ME	SI/SA-T	CH/BR	2000-5000	IN	Often forms thick masses in wet saline soil; frequently-used folk medicine
Horned-pondweed *(Zannichellia palustris)*	SU	AQ	N/A	CP/CH/BR	<8000	IN	The thin bright green grass-like leaves often occur in abundance near the surface of ponds and slow-moving waterways
Hornwort *(Ceratophyllum demersum)*	SU	AQ	N/A	CP/CH/BR	2000-6500	IN	Forms large masses under the surface of motionless or slow-moving water; restricts swimming and boat travel
Horsetail *(Equisetum laevigatum)*	EM/PE	SE/HY	SI/SA	CP/CH	4000-8000	FR	Spreads by rhizomes in wet and moist soils, often covering extensive areas; E. hiemale is another common species which occurs in Arizona
Knot grass *(Paspalum distichum)*	PE	HY	SI/SA	CH/BR	<4000	FR	Forms extensive stoloniferous masses along stream banks and in other areas of moist soil
Knotweed *(Polygonum amphibium)*	EM/PE	SE	NP	CP	5000-9000	FR	Often forms large masses in shallow water; the infloresences are tinged pink and conspicuous in full flower
Knotweed *(Polygonum bistortoides)*	PE	HY	NP	CH	8500-1100	FR	See P. fusiforme
Knotweed *(Polygonum coccineum)*	EM/PE	SE	NP	CP/CH/BR	2500-7000	IN	Similar to P. amphibium in habit but occurs also at lower elevations in Arizona
Knotweed *(Polygonum fusiforme)*	PE	HY	CL/SA	CH/BR	<4500	FR	One of several species of knotweed that often occur in abundance on wet soil; see also P. persicaria and P. bistortoides

Table A. (Continued)

Common Name and Species	Growth Form/ Habit	Hydrologic Regime	Soil/Substrate	Geographic Range	Elevation	Frequency of Occurrence	Comments
Knotweed *(Polygonum persicaria)*	PE	HY	NP	CP	5000-7000	FR	See P. fusiforme
Lobelia *(Lobelia cardinalis)*	PE	HY	CL/SA	CP/CH/BR	3000-7500	FR	The most common and abundant of the Arizona lobelias; often a significant element of the flora along water courses; flowers bright red and showy; rhizomes and corms are easily transplanted
Locust *(Robinia neomexicana)*	SH/TR	HY/ME	NP	CP/CH	4000-8500	FR	Large shrub or small tree with very showy clusters of white to violet flowers; large prickles deter pedestrian mobility; spreads by rhizomes forming large thickets; very fast growing and rhizomes easily transplanted
Manna grass *(Glyceria borealis)*	PE	HY	CL/SA	CP	7500-9000	FR	A tall graceful grass; three additional species occur in Arizona
Monkey-flower *(Mimulus cardinalis)*	PE	SE/HY	SI/CO	CP/CH/BR	2000-8500	IN	An attractive perennial with bright orange-red flowers; prefers seeps; similar to M. eastwoodiae, a stoloniferous species
Monkey-flower *(Mimulus guttatus)*	PE	SE/HY	SI/SA	CP/CH/BR	<9500	FR	Ubiquitous in wet soil; spreading by rhizomes and stolons; large and showy when in or near perennial water; flowers yellow; several other species of yellow monkey-flower occur in Arizona
Naiad *(Najas maritima)*	SU	AQ	N/A	BR	<4000	IN	
Nettle *(Urtica gracilis)*	HY	HY	CL/SA	CP/CH/BR	<9000	IN	Fast-growing leafy perennial spreading by rhizomes; herbage with stinging hairs
Paint-brush *(Castilleja minor)*	AN	HY	SI/SA	CP/CH/BR	3000-7500	IN	A thin annual to ca. 1m tall; top of stem has conspicuous red bracts when flowering
Panic grass *(Dichanthelium oligosanthes)*	PE	HY/ME	CL/SA	CH/BR	3000-6000	FR	Spreads by stolons; prefers moist sandy banks
Pepperwort *(Marsilea vestita)*	FL	AQ	N/A	CP/CH/BR	1500-7000	IN	The attractive clover-like leaves of this aquatic fern often cover large surface areas on still or slow-moving water

Table A. (Continued)

Common Name and Species	Growth Form/ Habit	Hydrologic Regime	Soil/Substrate	Geographic Range	Elevation	Frequency of Occurrence	Comments
Pink-stars *(Centaurium calycosum)*	AN	HY	SI/SA-T	CH/BR	<6000	FR	A thin annual of alkali seeps with showy pink flowers
Pondweed *(Potamageton crispus)*	SU	AQ	N/A	CH	3500-6000	IN	A species only recently discovered within Arizona which indicates that it is possibly a recent introduction; forms olive-green masses at and below the surface of still or slow-moving water no more than ca. 2m deep; the wavy margins of the leaves make them rather attractive
Pondweed *(Potamogeton foliosus)*	SU	AQ	NP	CP/CH/BR	<8500	FR	Forms green masses at and below the surface of still or slow-moving water gen. < ca. 1m deep; similar species that occur in Arizona are P. pectinatus (1000-5000'), P. pusillus (>6000'), and the submergent form of P. diversifolius (5000-7500')
Pondweed *(Potamogeton nodosus)*	FL	AQ/SE	NP	CP/CH/BR	<8000	FR	The oval leaves lie flat on the surface covering large areas where the water is no more than ca. 1m deep; similar species that occur in Arizona include P. natans (>8000'), P. gramineus (>5000), and the floating form of P. diversifolius (5000-7500')
Reed *(Phragmites communis)*	PE	HY	SI/SA-T	CH/BR	<6000	IN	Spreading by thick rhizomes to form extensive tule communities
Rose *(Rosa woodsii)*	SH	HY/ME	SI/CO	CP/CH	4000-9000	FR	Prickly shrubs spreading by rhizomes, often forming extensive masses along streambanks and moist in rocky drainage bottoms; flowers pink, showy; fruit valuable food for wildlife; the species is often split into several species or varieties
Rush *(Juncus balticus)*	EM/PE	SE/HY	CL/SA	CP/CH/BR	3000-7000	FR	A common species usually forming extensive, dense stands of wiry dark green stems; a good soil stabilizer; one of numerous species that occur in Arizona; rhizomes are easily divided and transplanted
Rush *(Juncus xiphioides)*	EM/PE	SE/HY	SI/CO	CP/CH/BR	>3500	FR	A common rush with flat, iris-like leaves; the group is taxonomically confusing and numerous synonyms are found in the literature

Table A. (Continued)

Common Name and Species	Growth Form/ Habit	Hydrologic Regime	Soil/Substrate	Geographic Range	Elevation	Frequency of Occurrence	Comments
Salt grass *(Distichlis spicata)*	PE	HY/ME	CL/SA-VT	CP/CH/BR	<7000	FR	This common sod-forming grass often occurs singularly in saline soils
Sedge *(Carex praegracilis)*	PE	HY	SI/SA	CP/CH	>3000	FR	Forms grass-like masses in wet meadows and along shallow waterways; an excellent soil stabilizer
Sedge *(Carex senta)*	PE	HY	SI/SA	CP/CH/BR	>2000	FR	One of the most common and elegant of the sedges; its roots, rhizomes and stems are very dense and are therefore useful for bank stabilization; ca. 50 species of Carex occur in Arizona and many are similar in habit and habitat preference to C. senta.
Sedge *(Carex siccata)*	PE	HY	SI/SA	CP	>8000	FR	A common sedge of higher elevations
Seep-willow *(Baccharis salicifolia)*	SH	HY/ME	SI/CO	CH/BR	<5000	FR	Often forming dense thickets 2-3m tall; not a true willow but similar to coyote willow (Salix exidua) but evergreen and more drought-tolerant; releases myriads of wind-born seeds in fall; often referred to as B. glutinosa
Spike-rush *(Eleocharis macrostachya)*	EM/PE	SE/HY	CL/SA-T	CP/CH/BR	<8000	IN	Although several species of spikerush occur in Arizona, this species is the most frequent and abundant
Spike-rush *(Eleocharis rostellata)*	EM/PE	SE/HY	CL/SA-T	CP/CH/BR	<8000	IN	One of the most salt-tolerant of the spike-rushes
Sycamore *(Platanus wrightii)*	TR	HY	NP	CH/BR	2000-6000	FR	Large deciduous tree with white trunks; often forming closed canopy riparian woodlands
Toad-flax *(Linaria texana)*	AN	HY/ME	SI/SA	CH/BR	1500-5000	IN	Tall annual with dark blue flowers
Triodanis *(Triodanis perfoliata)*	AN	HY/ME	CL/SI	CP/CH/BR	<7500	IN	In wet soil of warmer climates grows tall (ca. 1m) with showy purple flowers
Velvet ash *(Fraxinus velutina)*	TR	HY/ME	SI/CO	CP/CH/BR	2000-7000	FR	A common and abundant deciduous tree along intermittent and perennial streams especially in the mid-elevations of Arizona; morphologically variable; seedlings available through the Arizona State Land Department

Table A. (Continued)

Common Name and Species	Growth Form/ Habit	Hydrologic Regime	Soil/Substrate	Geographic Range	Elevation	Frequency of Occurrence	Comments
Water bird *(Betula fontinalis)*	TR/SH	HY/ME	NP	CP	7000-8000	IN	Primarily a streamside tree with smooth, glossy, red-brown bark
Water buttercup *(Ranunculus aquatilus)*	SU	AQ	NP	CP/CH	4500-9000	FR	Forms delicate masses of thin leaves and stems in shallow slow-moving or still water; flowers white, emergent; R. circinatus is a similar Arizona species
Water lupine *(Lupinus latifolius)*	PE	HY	SI/SA	CH	5000-6000	IN	Leafy perennial often forming large masses to 1.5m tall along waterways; flowers large but not colorful; common only in the Prescott area; L. latifolius var. leucanthus is the from found in Arizona and it is often referred to as L. parishii
Water speedwell *(Veronica anagallis-aquatica)*	EM/PE	SE/HY	NP	CP/CH/BR	<7000	FR	Forms leafy, often extensive, patches along perennial stream banks; V. americana (< . 9500') is a similar Arizona species.
Water-milfoil *(Myriophyllum sibiricum)*	SU/FL	AQ	N/A	CP/CH	5000-9000	IN	Forms masses of feathery vegetation on and below the surface of still or slow- moving water; M. brasiliense is also known from Arizona
Water-pimpernel *(Samolus valerandi)*	PE	SE/HY	NP	CH/BR	<5000	IN	An attractive perennial for its thin green leaves; often locally abundant along perennial streams
Water-plantain *(Alisma plantago-aquatica)*	EM	SE	CL/SA	CP/CH	4000-8000	FR	Similar to A. subcordatum
Water-plantain *(Alisma subcordatum)*	EM	SE	CL/SA	CP/CH	5000-7000	FR	Fibrous roots, leaves mostly emersed, blades broadly ovate, leaves occasionally floating, flowering in summer
Water-weed *(Elodea canadensis)*	FL/SU	AQ	N/A	CP/CH	4000-8000	IN	Forms masses on and below the surface of still or slow-moving water
Willow *(Salix laevigata)*	TR	HY	SI/CO	CP/CH/BR	2000-7000	FR	Large deciduous shrub or tree; easily propagated from green shoots ca. 1" in diameter; similar Arizona species include S. lasiolepis (4000-7500') and S. bonplandiana (5000-6500')

Table A. (Continued)

*This table illustrates the diversity of native plants that can be used in wetlands constructed for wastewater treatment. This list includes species, such as cattail that have long been associated with wetland wastewater treatment systems and other plants whose efficiency for wastewater treatment have not been demonstrated. Included with this list are general information regarding the geographic distribution within the state, frequency of occurance, typical hydrologic regime, soil preference, and elevational range. The availability in nurseries of these and other wetland plants not listed can not be quaranteed. During the early planning phases of a constructed wetland project, after funding and construction schedules are known, it would be prudent to contract-grow in advance those plants that will not be collected from wild populations.

(Growth Form/Habit = SHrub, TRee, PErennial herb, ANnual, VIne, SUbmergent, EMmergent, FLoating; Typical Hydrologic Regime = AQuatic, SEmi-aquatic, HYdroriparian, MEsoriparian; Soil Preference = CLay, SIlt, SAnd, GRavel, CObble, No Preference (When known the salt tolerance of a given species is included as a modifier as follows: Not Tolerant, Moderately Tolerant, Very Tolerant.); Geographic Range = Basin & Range, Central Highlands, Colorado Plateau Elevation Range = reported in feet above MSL Frequency of Occurance (Natural Populations) = INfrequent, FRequent, Frequent & Abundant.)

APPENDIX B

Noxious Weed Regulations and Noxious Weed Lists

facsimile
TRANSMITTAL

To: Martin Karpicak
University of Arizona

Fax #: 520/621-3816

Re: Noxious Weed Regulations and Noxious Weed Lists

Date: June 1, 1998

Pages: 1

Attached you will find copies of the Two Noxious Weed Regulations currently on the books. These are enforced by the Arizona Department of Agriculture. The Agency also enforces the Federal Noxious Weed Act of 1974.

Listed below are those **aquatic** or **semiaquatic** plant species regulated under the State's noxious weed regulations:

Catergory: Regulated Noxious Weeds
Floating Water Hyacinth *Eichhornia crassipes*

Catergory: Prohibited Noxious Weeds
Alligatorweed - *Alternantherea philozeroides*
Anchored Waterhyacinth - *Eichhornia azurea*
Aquatic Morningglory - *Ipomoea aquatica*
Hydrilla - *Hydrilla verticillata*
Purple Loosestrife - ***Lythrum salicaria***
Torpedo Grass - *Panicum repens*
Water-chestnut - *Trapa natans*

When I faxed you the Noxious Weed Regulations earlier today I neglected to include Purple Loosestrife in the above list of regulated aquatic weeds. I apologize for any inconvenience this may have caused.

Thank you,
Everett

FROM:

Everett L. Hall
Noxious Weed Program Manager
Arizona Department of Agriculture
1688 West Adams Street
Phoenix, Arizona 85007

602/542-3309
Fax: 602/542-0999

State of Arizona
Noxious Weed Regulations

Regulation R3-4-244 "Regulated and Restricted Noxious Weeds"
Regulation R3-4-245 "Prohibited Noxious Weeds"

Plant Services Division
Arizona Department of Agriculture
August 1996

Definitions

Exotic Organism:

A plant or animal that is **NOT** native (indigenous) to the region, area or locale in which it occurs. It can be introduced intentionally or unintentionally.

Weed:

A plant that is competitive, persistent and pernicious. It interferes with human activities and as a result is **UNDESIRABLE.**[1]

Noxious Weed:

A weed **SPECIFIED BY LAW OR REGULATION** for being particularly undesirable, destructive and difficult to control.[2]

---

1. Ross, Merrill and Carole A. Lembi "Applied Weed Science". Minneapolis: Burgess Publishing Company. 340pp. Illus. 1985.

2. California Weed Conference "Principles of Weed Control in California". El Macero, CA: Thomson Publications. 474pp. Illus. 1985.

Categories of Noxious Weeds

Regulated Noxious weeds

Regulated Noxious Weeds are those exotic plant species which are **WELL ESTABLISHED AND GENERALLY DISTRIBUTED** in Arizona. These plants are recognized to have undesirable characteristics and economic/environmental significance as to justify regulation under certain circumstances.

Restricted Noxious weeds

Restricted Noxious Weeds are those exotic plant species having noxious characteristics and are of economic and/or environmental significance. They **OCCUR** in Arizona in isolated infestations or very low populations.

Prohibited Noxious Weeds

Prohibited Noxious Weeds are those exotic plant species with known undesirable qualities of economic and/or environmental significance. The plants **ARE NOT KNOWN TO OCCUR** in Arizona.

Noxious Weed Regulations
Changes in Noxious Weed Listings

After July 1998

R3-4-245 "Prohibited Noxious Weeds"

Removed from regulation completely:
Kikuyugrass (*Pennisetum clandestinum*)

Added as a Prohibited Noxious Weed:
Tropical Soda-apple (*Solanum viarum*)

R3-4-244 "Restricted Noxious Weeds and Regulated Noxious Weeds

Moved from Restricted Noxious Weed Category and placed in Regulated Noxious Weed Category:
Floating Waterhyacinth (*Eichhornia crassipes*)

After September 1998

R3-4-244 "Restricted Noxious Weeds and Regulated Noxious Weeds"

Added as a Restricted Noxious Weed:
Sweet Resinbush (*Euryops subcarnosus* subsp. *vulgaris*)

ARIZONA DEPARTMENT OF AGRICULTURE
CHAPTER 4. PLANT SERVICES DIVISION

SECTION	ARTICLE 2. QUARANTINE
R3-4-244.	Regulated and Restricted Noxious Weeds
R3-4-245.	Prohibited Noxious Weeds

R3-4-244. Regulated and Restricted Noxious Weeds

A. Definitions. In addition to the definitions provided in A.R.S. § 3-201, the following shall apply to this rule:
   1. "Infested area" means each individual container in which the pest is found or the specific area which harbors the pest.
   2. "Regulated pest" means any of the following plant species, including viable plant parts (stolons, rhizomes, cuttings and seed, except agricultural, vegetable and ornamental seed for planting purposes), which are regulated noxious weeds:
      a. *Cenchrus echinatus* L. -- Southern sandbur
      b. *Cenchrus incertus* M.A. Curtis -- Field sandbur
      c. *Convolvulus arvensis* L. -- Field bindweed
      d. *Medicago* ~~[illegible]~~ *polymorpha* L. -- Burclover
      e. *Portulaca oleracea* L. -- Common purslane
      f. *Tribulus terrestris* L. -- Puncturevine
   3. "Restricted pest" means any of the following plant species, including viable plant parts (stolons, rhizomes, cuttings and seed, except agricultural, vegetable and ornamental seed for planting purposes), which are restricted noxious weeds:
      a. *Acroptilon repens* (L.) DC. -- Russian knapweed
      b. *Aegilops cylindrica* Host. -- Jointed goatgrass
      c. *Alhagi pseudalhagi* (Bieb.) Desv. -- Camelthorn
      d. *Cardaria draba* (L.) Desv. -- Globed-podded hoary cress (Whitetop)
      e. *Centaurea diffusa* L. -- Diffuse knapweed
      f. *Centaurea maculosa* L. -- Spotted knapweed
      g. *Centaurea solsitialis* L. -- Yellow starthistle (St. Barnaby's thistle)
      h. *Cuscuta* spp. -- Dodder
      i. *Eichhornia crassipes* (Mart.) Solms -- Floating waterhyacinth
      j. *Elytrigia repens* (L.) Nevski -- Quackgrass
      k. *Halogeton glomeratus* (M. Bieb.) C.A. Mey -- Halogeton
      l. *Helianthus ciliaris* DC. -- Texas blueweed
      m. *Ipomoea triloba* L. -- Three-lobed morning glory
      n. *Linaria genistifolia* var. *dalmatica* -- Dalmation toadflax
      o. *Onopordum acanthium* L. -- Scotch thistle

B. Area under quarantine: All infested areas within the state.

C. The following commodities are hosts or carriers of the regulated or restricted pest:
   1. All plants and plant parts other than those categorized as a regulated or restricted pest;
   2. Forage, straw and feed grains;
   3. Live and dead flower arrangements;
   4. Ornamental displays; and

5. Any appliance, construction or dredging equipment, boat, boat trailer or related equipment, or any other vehicle with soil attached or carrying plant debris.

D. The Department may quarantine any commodity or area infested or contaminated with a regulated pest and notify the owner or carrier of the restrictions and treatments listed in subsections (F) and (G). If the regulated pest is not quarantined, the Department shall provide the grower with technical information on effective weed control activities through integrated pest management.

E. The Department shall quarantine any commodity or area infested or contaminated with a restricted pest and shall notify the owner or carrier of the restrictions and treatments of the pest listed in subsections (F) and (G).

F. Restrictions.

1. No regulated or restricted pest or commodity infested or contaminated with a regulated or restricted pest shall be moved to a non-infested area unless the Director issues a permit for the transporting or propagating of such pest.
2. The owner or the owner's representative shall notify the Department at least two working days in advance of moving contaminated equipment from the infested area.
3. The Department may inspect all equipment within two working days after the request to inspect the equipment is made.

G. Treatments.

1. The owner or the owner's representative shall treat all soil and debris from the equipment used in the quarantined area to such a degree that it is free of the regulated or restricted pest before the equipment is moved from the infested area. Removal or destruction of the weed and weed seed shall be accomplished through one of the following methods:
   a. Autoclaving.
      i. Dry heat. The commodity shall be heated for 15 minutes at 212°F;
      ii. Steam heat. The commodity shall be heated for 15 minutes at 212°F.
   b. Fumigating with ethylene oxide, chamber only; The commodity shall be fumigated with 1,500 mg/L for four hours in a chamber pre-heated to 115-125°F.
   c. High pressure water spray;
   d. Crushing;
   e. Incinerating; or
   f. Burying in a sanitary landfill to a depth of six feet.
2. The owner or the owner's representative shall treat the infested area, including the area within the crop, rangeland, ditchbank, roadside, private property or body of water, with treatments based on an integrated pest management program appropriate to the commodity. The treatments shall take place under the direction of an inspector and shall include:
   a. Reshipment from the state;
   b. Manual removal;
   c. Application of a herbicide;
   d. Biological control including insects, fungi, nematodes or microbes; or
   e. Any other treatment approved by the Director.

EFFECTIVE July 10, 1995

R3-4-245. Prohibited Noxious Weeds

A. Definition. In addition to the definitions provided in A.R.S. § 3-201, the following shall apply to this rule:

1. "Infested area" means each individual container in which the pest is found, the specific area which

harbors the pest, or any shipment which has not been released to the receiver and is found to be infested with a pest.

2. "Pest" means any of the following plant species, including viable plant parts (stolons, rhizomes, cuttings and seed, except agricultural, vegetable and ornamental seed for planting purposes), which are prohibited noxious weeds:

a. *Alternanthera philoxeroides* (Mart.) Griseb. -- Alligator weed
b. *Cardaria chalepensis* (L.) Hand-Muzz -- Lens podded hoary cress
c. *Cardaria pubescens* (C.A. Mey) Jarmolenko -- Hairy whitetop
d. *Carduus acanthoides* L. -- Plumeless thistle
e. *Centaurea calcitrapa* L. -- Purple starthistle
f. *Centaurea iberica* Trev. ex Spreng. -- Iberian starthistle
g. *Centaurea sulphurea* L. -- Sicilian starthistle
h. *Centaurea squarrosa* Willd. -- Squarrose knapweed
i. *Chondrilla juncea* L. -- Rush skeletonweed
j. *Cirsium arvense* L. Scop. -- Canada thistle
k. *Coronopus squamatus* (Forskal) Ascherson -- Creeping wartcress (Coronopus)
l. *Cucumis melo* L. var. Dudaim Naudin -- Dudaim melon (Queen Anne's melon)
m. *Drymaria arenarioides* H.B.K. -- Alfombrilla (Lightningweed)
n. *Eichhornia azurea* (SW) Kunth. -- Anchored waterhyacinth
o. *Euphorbia esula* L. -- Leafy spurge
p. *Hydrilla verticillata* Royale -- Hydrilla (Florida-elodea)
q. *Ipomoea* spp. -- Morning glory. All species except *Ipomoea carnea*, Mexican bush morning glory; *Ipomoea triloba*, three-lobed morning glory (which is considered a restricted pest); and *Ipomoea aborescens*, morning glory tree.
r. *Isatis tinctoria* L. -- Dyers woad
s. *Lythrum salicaria* L. -- Purple loosestrife
t. *Nassella trichotoma* (Nees.) Hack. -- Serrated tussock
u. *Orobanche ramosa* L. -- Branched broomrape
v. *Panicum repens* L. -- Torpedo grass
w. *Peganum harmala* L. -- African rue (Syrian rue)
x. *Pennisetum clandestinum* Hochst. ex. Chiov. -- Kikuyu grass
y. *Rorippa austriaca* (Crantz.) Bess. -- Austrian fieldcress
z. *Senecio jacobaea* L. -- Tansy ragwort
aa. *Solanum carolinense* L. -- Carolina horsenettle
bb. *Sonchus arvensis* L. -- Perennial sowthistle
cc. *Stipa brachychaeta* Godr. -- Puna grass
dd. *Striga* spp. -- Witchweed
ee. *Trapa natans* L. -- Water-chestnut

B. Area under quarantine: All states, districts and territories of the United States except Arizona.

C. The following commodities are hosts or carriers of the pest:

1. All plants and plant parts other than those categorized as a pest;
2. Forage, straw and feed grains;
3. Live or dead flower arrangements;
4. Ornamental displays; and
5. Any appliance, construction or dredging equipment, boat, boat trailer or related equipment, or any other vehicle with soil attached or carrying plant debris.

D. The Department shall quarantine any commodity infested or contaminated with a pest and shall notify the owner or carrier of the methods of removing the pest from the commodity. The Department shall

reject any shipment not released to the receiver and reship to the shipper.

E. Restrictions:

1. No pest or commodity infested or contaminated with a pest shall be admitted into the state unless the Director issues a permit for the transporting or propagating of such pest.
2. The Department shall regulate the movement of the commodity out of a quarantined area within the state until the pest is eradicated. Any shipment or lot of a commodity infested or contaminated with a pest arriving in the state in violation of this quarantine shall, pursuant to A.R.S. § 3-205(A), be immediately reshipped from the state, or be treated or destroyed using one of the following methods:
   a. Fumigating with ethylene oxide, chamber only. The commodity shall be fumigated with 1,500 mg/L for four hours in a chamber pre-heated to 115-125°F;
   b. Incinerating;
   c. Burying in a sanitary landfill to a depth of six feet;
   d. Application of a herbicide; or
   e. Any other treatment approved by the Director.

EFFECTIVE July 10, 1995

Arizona Noxious weeds
Alphabetical Listing of Botanical Names

Acroptilon repens **- Asteraceae (R,I)**[1]
Russian Knapweed - Sunflower Family

Aegilops cylindrica **- Poaceae (R,I)**
Jointed Goatgrass - Grass Family

Alhagi pseudalhagi **- Fabaceae (R,I)**
Camelthorn - Legume Family

Alternanthera philoxeroides **- Onagraceae (P,U)**
Alligatorweed - Evening-primrose Family

Cardaria pubescens **- Brassicaceae (P,U)**
Hairy Whitetop - Mustard Family

Cardaria chalepensis **- Brassicaceae (P,U)**
Lens-podded Hoarycress - Mustard Family

Cardaria draba **- Brassicaceae (R,I)**
Globe-podded Hoarycress

Carduus acanthoides **- Asteraceae (P,U)**
Plumeless Thistle - Sunflower Family

Cenchrus incertus **- Poaceae (G,N)**
Southern Sandbur - Grass Family

Cenchrus echinatus **- Poaceae (G,A)**
Field Sandbur - Grass Family

Centaurea calcitrapa **- Asteraceae (P,U)**
Purple Starthistle - Sunflower Family

Centaurea diffusa **- Asteraceae (R,I)**
Diffuse Knapweed - Sunflower Family

---

1. **(G) - Regulated Noxious Weeds (R) - Restricted Noxious Weeds (P) - Prohibited Noxious Weeds U - Not known to occur in Arizona; I - Introduced into Arizona; N - Naturalized after being introduced into Arizona; A - Native to Arizona.**

Centaurea iberica **- Asteraceae (P,U)**
Iberian Starthistle - Sunflower Family

Centaurea maculosa **- Asteraceae (R,I)**
Spotted Knapweed - Sunflower Family

Centaurea solstitialis **- Asteraceae (R,I)**
Yellow Starthistle - Sunflower Family

Centaurea squarrosa **- Asteraceae (P,U)**
Squarrose Knapweed - Sunflower Family

Centaurea sulphurea **- Asteraceae (P,U)**
Sicilian Starthistle - Sunflower Family

Chondrilla juncea **- Asteraceae (P,U)**
Rush Skeletonweed - Sunflower Family

Cirsium arvense **- Asteraceae (P,U)**
Canada Thistle - Sunflower Family

Convolvulus arvensis **- Convolvulaceae (G,N)**
Field Bindweed - Morning Glory Family

Coronopus squamatus - Brassicaceae (P,U)
Creeping Wartcress - Mustard Family

Cucumis melo var. dudaim **- Cucurbitaceae (P,U)**
Dudaim Melon - Cucurbit Family

Cuscuta **spp. - Convolvulaceae (R,I.A)**
Dodder - Morning Glory Family

Drymaria arenarioides **- Caryophyllaceae (P,U)**
Alfombrilla - Pink Family

Eichhornia azurea **- Ponteridaceae (P,U)**
Anchored Waterhyacinth - Pickerelweed Family

Eichhornia crassipes **- Ponteridaceae (G,I)**
Floating Waterhyacinth - Pickerelweed Family

Elytrigia repens **- Poaceae (R,I)**

Branched Broomrape - Broomrape Family

***Panicum repens* - Poaceae (P,U)**
Torpedo Grass - Grass Family

***Peganum harmala* - Zygophyllaceae (P,U)**
African Rue - Caltrop Family

Pennisetum clandestinum* - *Poaceae (P,U)
Kikuyu Grass - Grass Family

***Portulaca oleracea* - Portulaceae (G,N)**
Common Purslane - Portulaca Family

***Rorippa austriaca* - Brassicaceae (P,U)**
Austrian Fieldcress - Mustard Family

***Senecio jacobaea* - Asteraceae (P,U)**
Tansy Ragwort - Sunflower Family

***Solanum carolinense* - Solanaceae (P,U)**
Carolina Horsenettle - Nightshade Family

***Sonchus arvensis* - Asteraceae (P,U)**
Perennial Sowthistle - Sunflower Family

***Stipa brachychaeta* - Poaceae (P,U)**
Puna Grass - Grass Family

***Striga* spp. - Schrophulariaceae (P,U)**
Witchweed - Figwoirt Family

***Trapa natans* - Trapaceae (P,U)**
Water-chestnut - Water-chestnut Family

***Tribulus terrestris* - Zygophyllaceae (G,N)**
Puncture-vine - Caltrop Family

APPENDIX E

Technical Memorandum

Review of 30% Plans

April 3, 1997
(Text Only)

HDR

Memorandum

To: Joe Spadafino, ADOT
Don Rerick, FCDMC

SEVRDS/Santan Channel Design
ADOT Contract 97-16

From: Jerry Zovne

Date: April 3, 1997

Subject: **Technical Memorandum**
Review of 30% Plans

The attached memorandum describes the modifications HDR is proposing to the 30% design of the basin complex and outlet channels "A-2" and "A-3" as originally described in ***Initial Drainage Report: Santan Freeway 56th Street to Price Road and Gila Drain Floodway to Basin B,*** Wood-Patel & Associates, Inc., September 12, 1996 and ***Plan and Profile of Proposed Santan Drainage Channel*,** DMJM Arizona, Inc., September, 1996. Familiarity with these documents is assumed in this memorandum. The revisions apply only to the Phase 1-Basin Grading Project and to the Phase 2 design of basin structures and channel segments "A-2" and "A-3". Channel segment "A-1" is not addressed in this document. Final Phase 1 plans were submitted March 27, 1997.

The first part of the memorandum addresses revisions to the basin plan that were originally proposed by HDR in our response to ADOT's RFP for this project. The changes deal primarily with the hydraulics of routing flows into, through and out-of the basin complex. The HDR plan preserves the original intent of the 30% design, but provides better control of inflow and bypass flow. It also eliminates the need for the proposed screw pump lift station.

The second part of the memorandum deals with revisions to channel segments "A-2" and "A-3". Detailed HEC-1 modeling of the basin complex resulted in a larger primary retention basin (Basin B) and a greater outlet channel design flow than in the original plan. The HEC-RAS hydraulic model was therefore rerun to verify the design of the outlet channel.

Other changes to the outlet channel design include the profile of channel under the SPRR track at 56th Street and relocation of the connector channel "A-2" to the west side of the Gila Drain. Additional changes were made to minimize utility relocation and right-of-way requirements, as detailed in the text. The revised 30% plans are included in the report.

Southeast Valley Regional Drainage System

SANTAN CHANNEL PROJECT

Technical Memorandum

Review of 30% Plans

I. REVISIONS TO BASIN COMPLEX CONCEPTUAL PLAN

Attached Figure 1 is a conceptual plan for the layout of the basin complex. The basin complex consists of the Equalization Basin that also serves as a sedimentation basin, Basin B that provides primary detention/retention storage, and the Water Quality Basin that consists of two treatment cells. The layout of the complex represents a significant change from the 30% plans, although basic functions have not changed. The new layout preserves the function of the original concept as developed in the ***Initial Drainage Report-Santan Freeway*** September 12, 1997, prepared by Wood-Patel & Associates and the ***30% Plans for the Santan Drainage Channel***, 9/96, prepared by DMJM. The new layout improves the hydraulic routing through the basin and provides for a significant improvement in the level of control of inflows to and outflows from the basin complex.

In addition, the redesign accomplishes other objectives that were either proposed by HDR or were decided in recent meetings, as follows:

1. The two long radius curved RCB's s from the east and west branches of Channel A-1 have been changed to a single combined and straight 7-10'x7'(3m x 2.1 m) RCB under the freeway to reduce cost.

2. A forebay channel at the inlet to the equalization and retention basins has been provided to allow more precise control of the overflows to Basin B and to the outlet channel. The overflow weir will have a constant overflow level along the weir, as compared to a side-channel weir in the original plan.

3. The flow to the outlet channel will be controlled by a box culvert with inlet control, as compared to simple normal depth channel flow control in the original plan. A 4-10'x4' (3 m x 1.3 m) RCB has been provided at the outlet from the forebay channel to Connector Channel "A-2". This allows the head-flow rating to be established at this location, and furthermore restricts outflow when water level exceeds the top of the culvert. This in turn forces more water into Basin B for flows at or exceeding the design flow condition.

4. Channel "A-2" has been shifted to the west side of the Gila Drain in order to avoid two siphons for the Gila Drain. This will require approximately 75 ft (23 m) of new right-of-way (R/W) along the west side of the Gila Drain. It also frees up much-needed space for the basins on the available site. With the possible connection of Gila Drain to the Pima-Maricopa Irrigation Project (P-MIP) pipeline, ADOT may want to purchase the west half of the Gila Drain as well as the additional R/W for channel "A-2". This would minimize R/W acquisition and possibly simplify agreements between ADOT, SRP and GRIC.

5. The Equalization Basin will provide 27.6 acre-ft (34088 m3) storage below the Connector Channel overflow level. The volume is somewhat larger than the 25 acre-ft (30,800 m3) as specified in the original design.

6. The equalization basin will be gravity drained to the water quality basin, thus eliminating the need for a screw pump as proposed in the original plan. The design of the treatment system is in progress with the assistance of Dr. Karpiscak. The recommendations will be included in the 60% submittal for the Phase 2.

7. Two cells have been provided in the water quality basin to allow two different vegetation types to be tested and to provide for back-up if one cell requires maintenance. Dry wells have been determined to be not suitable in this area for storm water recharge in this area and will not be used. There is perched groundwater at about 60-ft depth and underlying permeable deposits are fully saturated. (See Geotechnical Report for Phase I by AGRA).

8. The outflow from the water quality basin will be directed to Basin B. Gates must be provided on the water quality basin outlets to prevent back-flow when Basin B is full. These will be operated manually, but may be equipped with an override to close when Basin B reaches a certain level. Likewise , the inflow from the equalization basin to the water quality basin will be equipped with a manually-operated gate that will be normally closed. However, should there be a failure to open or close any of these gates during a major storm event, the only impact would be to flood the water quality basin. The basin complex perimeter and dividing berms are all at the same level with two feet(0.6m) freeboard above the 100-year level.

9. Equalization Basin retained volumes will be gravity drained at a low rate of flow to either or both of the treatment cells. The treated storm water will then gravity drain from the treatment cells to Basin B. The treated flows will be pumped by the low-flow pump (i. e. the "nuisance" flow pump) at the Kyrene station. Normally, this pump would be sized for 8,000 gpm (0.5 cms) for freeway low flows. It may be downsized to match the very low flows expected from the treatment cells, or a second low-flow pump may be included for pumping efficiency. A benefit of this plan is that the treated flows can be temporarily retained in Basin B and monitored for water quality, rather than discharging by gravity directly to the outlet channel, as in the original plan. If there is a problem, such as a spill on the freeway or a toxic spill somewhere in the system, these can be retained in Basin B and disposed of properly.

10. Basin B is a combination detention/retention basin. Inflows to the forebay channel are initially directed to the Equalization Basin. When the Equalization Basin reaches the level of the outlet culvert [4-10'x4'(3 m x 1.2 m) RCB] invert of 1151 ft (350.8 m), storm flows begin to bypass the basin complex. Near the 100-year design peak inflow, the forebay will begin to spill over the 700-ft (213 m) long side weir into Basin B. The side weir is set at elevation 1154 ft (351.7 m) whereas the Basin B high water is at about elevation 1155 ft (352.0 m). Therefore, the top one foot (0.3 m) of Basin B storage flows back out on the receding limb and is detention storage, whereas the volume stored below the weir is retention storage. The retained flows will be drained to the Kyrene pump station and pumped to the outlet RCB as shown in Figure 1. This is a pressurized line so that it can be placed at minimal depth of cover. Size of this line will depend upon the desired evacuation time and matching pump characteristics to freeway on-site discharge requirements. Using two primary pumps of 50 cfs (1.42 cms) capacity each , will dewater Basin B in less than about 60 hours.

11. The Kyrene pump station that is presently included in the on-site drainage concept for the Santan Freeway [i.e., a 200 cfs (5.67 cms) base station] will be moved to the basin site as shown in Figure 1. It will continue to function primarily as a freeway on-site pump station that will discharge to the Equalization Basin. The pump station will normally be configured to operate as a freeway evacuation station. The station will be modified to evacuate Basin B post-event, including treated water accumulations and retained storm water, to Channel "A-2". Whether freeway and basin evacuation functions can be shared requires additional study. Due to the need to protect the freeway, the pump station may a require a separate wet well and additional pumps to dewater Basin B. The recommended plan will be included in the 60% submittal.

Both the Basin B volume and the peak flow in the outlet channel are somewhat greater than originally proposed. These are a function of the HEC-1 model inflow hydrograph and the outflow and overflow ratings. We have attempted to optimize these while also making best use of the site. The plan assures that the Equalization Basin will impound the first 25 acre-feet (30,800 m3) "first flush" while bypassing as much flow as possible. At the same time the length of the overflow weir and Basin B volume were minimized because they are the major cost items. Also, the location of facilities for hydraulic routing was a factor. We worked with many configurations to arrive at the one shown. We feel that this is a reasonably optimal configuration both from a cost and operations standpoint.

The Phase I Basin Grading Project plans include a perimeter fence, a 13 to 23 feet (4 to 7 m) wide perimeter maintenance road, and 10 ft (3 m) basin ramps. Primary access to the site is anticipated to be from Kyrene Road. The fence along the eastbound Santan Freeway off-ramp is set a minimum of 32 feet (10m) from the edge of pavement to provide a minimum roadway embankment clear zone.

The basin site is just adequate to accomplish everything that is required. By moving the outlet channel to the west side of the Gila Drain, it was easier to keep the maximum depth of Basin B within ADOT recommendations.

Because of the proximity of the basin complex to the Santan Freeway, the grading plan will be a constraint to any future changes in the horizontal and possibly the vertical alignment of the freeway. The existing freeway plans shown in the attached drawing are HDR's original concept plans from 1991 and 1992 that were soft-converted to metric. The 30% plans have not been completed for this portion of the freeway and the original geometry is not necessarily consistent with the new metric controls that were used for the Santan Channel project. However, the original concept it is the best reference we have to work with at present and has been relied upon to set the limits of the basin complex. Upgrading the freeway design to current standards and geometric controls is not within the scope of the Santan Channel project.

HEC-1 Model Revisions

The HEC-1 model for this project was provided by DMJM/Wood Patel who prepared the 30% plan submittal as ADOT's GEC. The model has actually not changed from the original prepared by HDR for ADOT as part of the Price GEC and reported in ***Hydrology Study for Price Expressway, Vols. I & II,*** Dec. 1989, and ***Gila Alternative Concept Drainage Report***, February, 1993. Subsequently, the FCDMC utilized some of the back-up material generated for the ***Hydrology Study*** to prepare the HEC-1 model for the ***Gilbert-Chandler ADMS*** in 1993. Also, the Gila River Indian Community has reviewed this model (Harry Millsaps). Price Freeway Galveston-Frye interim project, now constructed, used this model as a basis for final design of Basin G and the off-site drainage facilities in this corridor. These facilities connect to the Santan Channel and therefore the precedent has been set for the continued use of the model. The model has thus been consistently used by all parties to the Southeast Valley Regional Drainage System.

Therefore, in designing the facilities for Phase 1, 2, and 3 of the Santan Channel Project, HDR is continuing to use this model as a basis. Some very minor revisions to the model were made in the current work to size the basin complex. These included the routing of initial flows to the Equalization Basin, and then determining the size of Basin B required to limit the flow to the outlet Connector Channel "A-2". This required that rating curves be developed for the 4-10'x7' (3 m x 2.1 m) RCB outlet control to "A-2", and for the overflow weir. The computation for the rating curves is attached, with notations.

The revised HEC-1 model is also attached. The model was run numerous times to optimize length of weir, basin size, and peak outflow to "A-2". Also, the overflow elevation at the RCB outlet control and the weir level were adjusted to obtain desired results. These are firm, but yet preliminary values. The design will be finalized by the 60% submittal. At this time only the basin volumes were important for the Basin Grading Project. Phase II design details, such as the configuration of the overflow weir(soil cement, concrete), and the size of inlet to equalization basin will be established by the 60% submittal.

II. REVISIONS TO CHANNELS "A-2" AND "A-3".

The revised 30% Plan Sheets for the Connector Channel "A-2" and Outfall Channel "A-3" are included, attached. The HEC-RAS model was revised to account for the higher design discharge of 900 cfs (25.5 cms). Other considerations in revising the HEC-RAS model and channel design are as follows:

1. The tailwater elevation in the Gila Drain Floodway was raised nearly three feet (1 m). The level corresponds with HDR's HEC-2 model for the Gila Drain Floodway, but more importantly reflects the potential permanent high water level in the floodway, should GRIC develop the floodway as a multi-use waterway in the future. This had a very significant impact on the channel design from the Gila Drain Floodway to the outlet of I-10 culvert. It raised the channel hydraulic grade line above the natural ground line. This required a berm on the west side with two feet(0.6 m) of freeboard, in turn requiring more R/W. The channel was placed as close as possible to the freeway embankment to minimize R/W impact on GRIC land. The alignment is shown on plan sheets D-1.29 through D-1.32. Some other observations on these sheets: i) At least four telecommunication lines are impacted for the length of the channel and will likely require relocation. ii) The GRIC P-MIP pipeline will parallel the channel on the west side down to the Broadacres turn-out. Utility relocation and R/W must be coordinated in this reach. iii) The potential to connect the City of Phoenix 48th Street basin outlet channel must also be considered.

2. The slope of the culvert from the I-10 undercrossing to 56th Street was significantly impacted by the need to stay a least three feet (1 m) under the SPRR track on the east side of 56th Street. This did not allow the downsizing of the culvert so as to mitigate some of the utility conflicts from I-10 to 56 th Street, as originally planned. However, lowering the entire profile of the box resulted in an even better opportunity to avoid utility conflicts and reduce utility relocation costs. Lowering the channel box profile allows the SRP Pecos Drain to be relocated on top of the culvert in the same/existing corridor. There is just enough slope on the culvert to accomplish this without increasing the size of the culvert as in the original 30% plan. Placing the Pecos Drain on top of the box avoids other utility relocations in that corridor.

3. The slope of the channel reach from the 56th Street culvert inlet to the Gila Drain was not significantly changed. However, the size of channel and freeboard was looked at carefully to see if it was possible to avoid a conflict with the Chandler sanitary sewer that parallels this segment. The original 30% design showed these to be in potential conflict. The plan has been modified in that the channel is slightly smaller while maintaining minimum one ft (0.3 m) freeboard, and the slope is slightly changed. If Chandler and ADOT agree to utilizing a common maintenance access road on the south side of the channel, the channel can be placed in the 75 ft.(23m) R/W that has been proposed.

4. The remaining channel reach along the Gila Drain from Pecos Road to the Santan Freeway culvert is the relocated Connector Channel "A-2". It will require about 75 ft(23 m) R/W unless the Gila Drain west side maintenance access road can be shared with ADOT. There is a Chandler sanitary sewer in this reach and it appears that relocation can be avoided except possibly at the Santan Freeway crossing.

HEC-RAS MODEL

A copy of the HEC-RAS run is attached for reference. A "Channel Profile" spreadsheet is included to assist in relating the HEC-RAS cross-sections to channel centerline stationing. A "Freeboard Check" spreadsheet is also included. This was used to determine the full channel cross-section, including the maintenance road and back slope catch-points for R/W requirements.

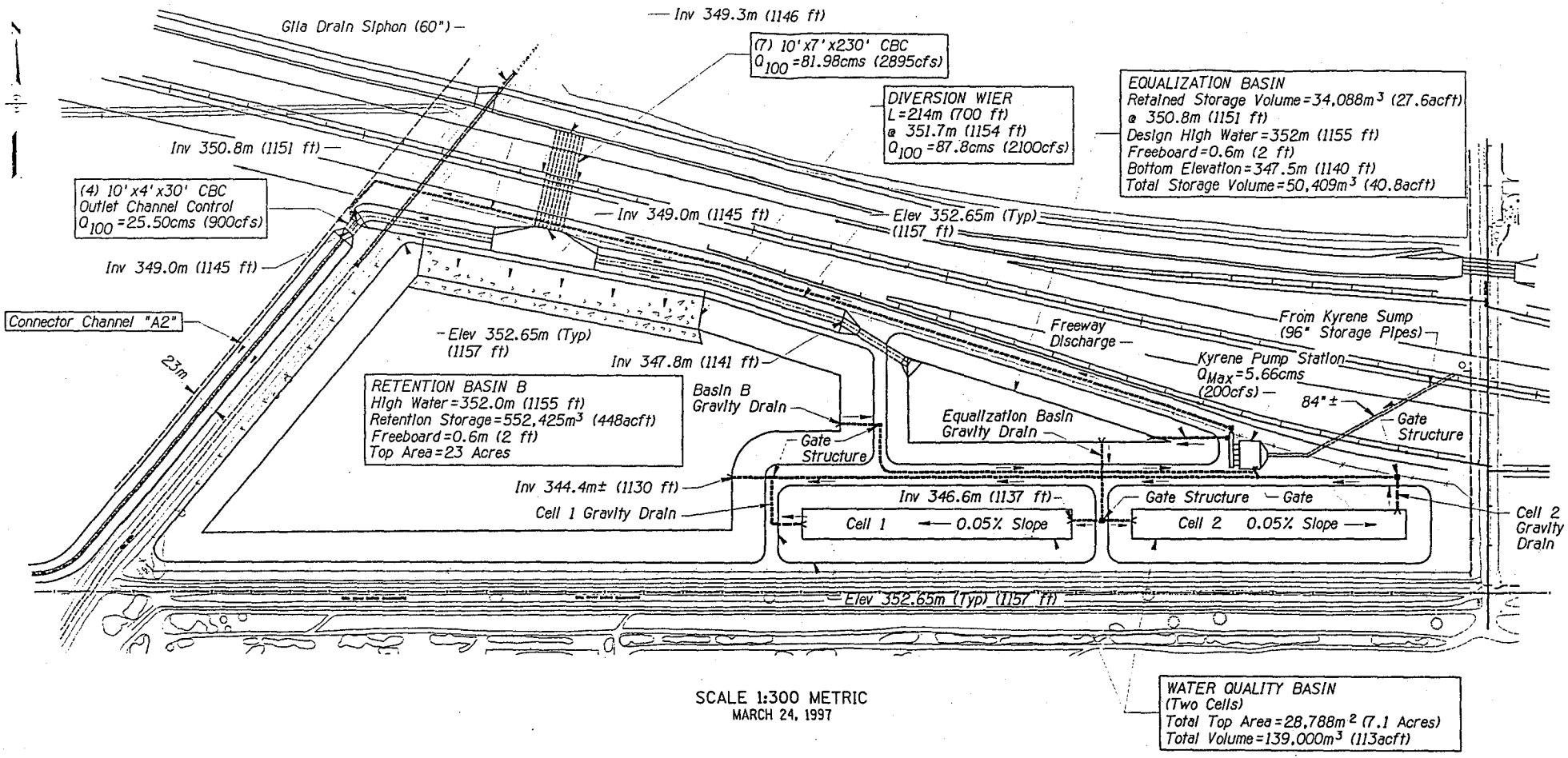

SCALE 1:300 METRIC
MARCH 24, 1997

ADOT CONTRACT 97-

	NAME	DATE
DESIGN	KJ	4-97
DRAWN	KJ	4-97
CHECKED	JZ	4-97

HDR Engineering, Inc.

ARIZONA DEPARTMENT OF TRANSPORTATION
INTERMODAL TRANSPORTATION DIVISION

SANTAN CHANNEL DESIGN
BASIN COMPLEX
CONCEPTUAL PLAN

FIGURE 1

SOUTHEAST VALLEY REGIONAL DRAINAGE SYSTEM

SHEET 1 OF

APRIL 3, 1997
FILENAME: BASIN20.DGN

APPENDIX F

Water Quality Protection Permit- Gila Floodway

DMJM

Daniel, Mann, Johnson, & Mendenhall
2777 E. Camelback, Suite 200
Phoenix, Arizona 85016-4302
Telephone: 602/337-2777
Fax: 602/337-2624

REGIONAL FREEWAY SYSTEM
ADOT GENERAL CONSULTANT

HDR

letter of transmittal

REC.: JUN 0 5 1998

TO: HDR Engineering
2141 E. Highland, Suite 250
Phoenix, AZ 85016

DATE: 06/04/98
PROJ.: 173-159-044
FILE:
DN: 3076
DIST Daily File
EN: 500.5.4, 200.18, 600
cc: J. Zovne

ATTENTION: Jerry Zovne

We Transmit: ☒ herewith ☐ under separate cover ☒ as requested

Via: ☐ mail ☒ messenger ☐ federal express ☐ fax

For your: ☒ use ☐ review and comment ☒ information ☐ record
☐ distribution ☐ approval/acceptance ☐ signature ☐ other

The following: ☐ drawings ☐ specifications ☐ calculations ☐ report
☐ copy of letter ☐ shop drawing/product data ☐ diskettes ☐ change order
☐ originals ☒ other

copies	reference no.	description	action code
1		Southeast Valley Regional Drainage System (SEVRDS) and Gila Floodway Permit and Scope of Work, with letter to Steve Jimenez (ADOT) signed by Governor Mary Thomas (GRIC)	

Action codes: A - Sign and return B - Forward as noted C - Resubmit D - Refer to remarks below

Remarks:

If you need any additional information please call Bud Reyes at 337-2523.

Copies to: Javier Guana, Steve Jimenez

Signed: Thomas Monchak

Thomas M. Monchak
Project Manager

Note: If enclosures are not as noted, please inform the sender immediately.

2885
200.18,
500.54, 200.3, 600

GILA RIVER INDIAN COMMUNITY

SACATON, AZ 85247

Executive Office of the
Governor and Lt. Governor
315 West Casa Blanca Road
Post Office Box 97

(520) 562-6000
Fax: (520) 562-6010

TM
ADOT GEN. CONS.
TM PW SW TO JG KF SO RL JM MS
FILE 1
TM

March 6, 1998

Steve Jimenez
Assistant State Engineer
Valley Project Management Group, Mail Drop 614E
Arizona Department of Transportation
205 South Seventeenth Avenue
Phoenix, AZ 85007-3213

Re: Southeast Valley Regional Drainage System (SEVRDS) and Gila Floodway Permit

Dear Mr. Jimenez:

In order to implement the existing 1991 agreement between the Gila River Indian Community (GRIC) and ADOT the GRIC Department of Environmental Quality has initiated a permit development process for the SEVRDS project as described in our April 25, 1997 letter to Dick Perreault of the Maricopa County Flood Control District. Based on the latest information, we believe this process now would best function in two steps: a Conditional Permit issued within the next few months to allow construction of an outfall channel coincident with the Pima-Maricopa Irrigation Project (P-MIP) crossing of the I-10 Freeway and a Final Permit issued after a more comprehensive review of the ultimate project. Although we prefer to issue a single permit after the necessary information is gathered, we recognize the need to keep the P-MIP and Freeway projects on schedule. Also, the Conditional Permit will further define the relationship between ADOT and the Community in anticipation of issuing a Final Permit for discharge of stormwater to the Gila Floodway. As you know, the Tribal Council will make the final decision on permit issuance.

The attached Final Scope of Work (SOW) has been revised according to agreements reached at our meeting on December 31, 1997. The specific agreements and the location in the SOW of those changes are as follows:

ADOT is only responsible for the quality of water discharged from SEVRDS to the Gila Floodway. ADOT is not responsible for the quality of water from any other source discharged to the Floodway (Page 2, Paragraph 4).

The point-of-compliance for the SEVRDS outfall will be determined by agreement between ADOT and Gila River Indian Community (GRIC); this point-of-compliance will be above all other discharges to the Gila Floodway (Page 2, Paragraph 4).

ADOT will provide funds for well installation and monitoring near the wetlands/detention basins, and GRIC will be responsible for having wells installed and samples collected (Page 2, Paragraph 5).

The location of groundwater monitor wells at the wetlands/detention basins will be determined by scientific and technical considerations. All parties must agree on locations before wells are installed (Page 2, Paragraph 5; Page 9, Task 6).

The purpose of groundwater monitoring, conducted as part of the permit development process, is to provide a baseline characterization of current groundwater quality (Page 2, Paragraph 5; Page 6, Bullet 4; Page 9, Task 6.0).

Historical aquifer contamination or contamination caused by activities unrelated to SEVRDS are not the responsibility of Arizona Department of Transportation (ADOT) (Page 2; Paragraph 5; Page 6, Bullet 4).

The SOW will only refer to the use of action levels; not Maximum Contaminant Levels or MCLs (No reference to MCLs in the document; action levels referred to on Page 3).

In the event that the Final Permit is not complete when stormwater discharges to the Gila Floodway become necessary, the Conditional Permit will allow for discharge to the Floodway if ADOT and GRIC agree that construction is complete and that the wetland best management practice is fully operational (Page 4, Paragraph 4).

Other Final SOW changes of note include: (1) changes agreed to and noted in GRIC's December 3rd response to ADOT's comments to the original SOW were incorporated; (2) GRIC added some language to emphasize that GRIC views this agreement as a document developed to implement an agreement between two governments; it was not developed to meet a state, tribe or federal regulatory requirement (see top of Page 4); and (3) the cost estimate was modified to reflect the cost for installing and monitoring two groundwater wells near the wetlands/detention basins.

Work on the Conditional Permit can commence once the following items are received from ADOT 1) receipt of the necessary technical information for the permit; 2) the permit application fee; and 3) ADOT agreement to work toward development of a Final Permit. Detail of these three items follows.

1. Complete Technical Information on the SEVRDS Project

Additional information is needed to prepare the Permits and ensure their accuracy. This information includes, but may not be limited to, the following:

1. Design Memorandum for SEVRDS Storm Water Management (dated September 1996)
2. Current plan for design and construction of SEVRDS as described in a June 12,

1997 SEVRDS project meeting or updated as appropriate [e.g., 30% and 60% design memoranda, wetlands designs report (Karpiscak, University of Arizona)].

3. Additional information on water quality which may assist us in preparing a Final Permit such as:

- Update of anticipated values, if any, for quantity and quality of constituents entering the Santan Channel from the SEVRDS' detention and wetland treatment system.
- Update of anticipated values, if any, for stormwater quantity and quality expected to flow to SEVRDS' detention and wetland treatment system; and
- Update on anticipated flow from SEVRDS system to the Gila Floodway.

2. Fees to complete preparation of permits

The GRIC DEQ requires a Permit Application Fee from ADOT for the Conditional and Final Permits. Attached is a Scope of Work and Cost Estimate for both permits.

3. ADOT agreement to work toward development of a Final Permit

GRIC needs a letter of commitment from ADOT which is signed by the State Engineer. The letter should express that ADOT is committed to work with GRIC and its contractor, EcoPlan Associates, on development of the Final Permit in a timely manner.

The Final Permit will supersede the Conditional Permit. We anticipate issuing the Final Permit within two years of issuing the Conditional Permit. The Final Permit will be more comprehensive than the Conditional Permit and is intended to protect surface and ground water quality and water uses on GRIC lands.

We expect to complete the technical work and deliver to the Natural Resources Committee (NRC) for discussion and approval a draft Memorandum of Agreement (MOA) containing a Conditional Permit within 16 weeks after all requirements are met. The NRC may approve, revise or remand the draft Conditional Permit back to staff; however, if they approve the draft permit, it would then go to the Tribal Council for discussion and approval.

In the event that the Final Permit is not complete when stormwater discharges to the Gila Floodway become necessary, the Conditional Permit will allow for discharge to the Floodway if ADOT and GRIC agree that construction is complete and that the wetland best management practice is fully operational.

In addition to developing the permits, there is a need to maintain an ongoing working relationship among all responsible parties to provide a forum for addressing questions and implementing solutions to identified problems. Areas of interest include determining 1) the local

relationship between percolating surface water in the Floodway or wetlands and shallow and regional aquifer quality, 2) the source of possible contaminants in stormwater and other drainage waters, and 3) the dynamics of contaminants after they enter the Floodway.

Your assistance in expediting submittal of the above items would be appreciated. We look forward to working closely with you and your staff to complete the permits. If you have questions regarding these items, please contact Glenn Stark at 520-562-3203.

Sincerely,

Mary V. Thomas 3-24-98

Mary V. Thomas
Governor - Gila River Indian Community

cc: Pat Mariella, Director of Environmental Quality

Attachments

2886
200.18,
500.5.4,
200.2, 600

TM
ADOT GEN. CONS.
TM
PW
SW
TO
JG
KF
SO
BL
JM
MS
BR
FILE 1

FINAL

SCOPE OF WORK

and

COST ESTIMATE

to develop

CONDITIONAL AND FINAL WATER QUALITY PROTECTION PERMITS FOR THE ARIZONA DEPARTMENT OF TRANSPORTATION

by the

GILA RIVER INDIAN COMMUNITY

Permitting Assumptions and Expectations

In preparing a water quality permit for stormwater, GRIC is making seven principal assumptions:

1. Source water consists of stormwater, and although its quality may vary, this stormwater is not expected to contain industrial or municipal wastes;

2. SEVRDS wetlands/detention basins are adequate to remove stormwater pollutant concentrations to levels which will not exceed levels necessary to protect surface water uses of the Gila Floodway or aquifers beneath GRIC lands. These wetlands/detention basins, therefore, constitute a Best Management Practice (BMP) for the treatment of this stormwater;

3. Monitoring for pollutants (e.g., stormwater inflow, SEVRDS' point of compliance which accounts for both the wetlands discharge and balance of storm, aquifers near wetlands, etc.) will be adequate to track water quality trends, identify problems and verify assumptions 1 and 2. If deemed necessary, to the extent practicable monitoring will occur during preparation of the conditional and final permit. Monitoring will continue upon completion of the final permit;

4. ADOT will pay for the surface water point of compliance sampling station and all monitoring costs associated with either the conditional or final permit. The point of compliance sampling station will be located downstream of all SEVRDS basins but upstream of all other potential discharges to the SEVRDS outfall channel at a point determined by agreement between ADOT and GRIC. ADOT is only responsible for the quality of water discharged by SEVRDS; ADOT is not responsible for any other discharges to the Gila Floodway;

5. ADOT will provide funds for installation and monitoring of groundwater wells near the wetlands/detention basins. GRIC will be responsible for installing wells and collecting groundwater samples. The location of wells will be determined by scientific and technical considerations; ADOT and GRIC must agree on selected locations before wells are installed. GRIC recognizes that ADOT is not responsible for the quality of groundwater as it exists prior to construction of SEVRDS. The purpose of these wells is to provide baseline data to characterize current water quality in the aquifer underlying the wetlands/detention basins. The need for continued monitoring of these wells upon completion of the final permit will be determined on the basis of the quality of stormwater, i.e., if it appears to pose a risk to aquifer water quality;

6. The Gila Floodway is protected by the following designated uses: Aquatic & Wildlife ephemeral (acute only), Partial Body Contact, and Agricultural Livestock Watering. These designated uses are defined the same as those in Arizona's surface water quality standards adopted April 24, 1996. The quality of water entering the Floodway at all times should meet

the numeric and narrative water quality criteria required to protect those designated uses. These criteria are also the same as those found in Arizona's 1996-adopted surface water quality standards: and

7. Compliance with the water quality standards will be an element of the final permit. We anticipate using a reasonable approach where we consider the frequency with which the exceedance occurs. We are considering if more than half of the observations over any consecutive two-year period exceed a standard at the point of compliance, then the discharge is considered out of compliance with the permit.

Although regulation of stormwater is treated as a point source program under the Clean Water Act, in practice pollutants in stormwater typically arise from nonpoint or diffuse sources that can vary depending on intensity, frequency and location of storm events. This variability contrasts with industrial or municipal point source discharges that vary little in quality. For this reason, stormwater is treated in various communities by implementation of best management practices, including such simple activities as street sweeping, litter control, elimination of illegal discharges, public education, and retention and detention basins.

The SEVRDS project relies on stormwater BMP's applied by municipal governments (i.e., Chandler, FCD and ADOT) and the wetlands to minimize the oppportunity for pollutants to be present in stormwater discharges. The use of wetlands is an innovative approach to mitigating the effects of stormwater pollutants on receiving waters. The numeric and narrative standards that apply to the Gila Floodway to protect surface water and groundwater will act as action levels to evaluate compliance with permit conditions. If the discharge does not comply with a water quality standard as defined in Assumption #7 above, the following stepwise process will be initiated by ADOT to identify additional best management practices that must be implemented to bring stormwater into compliance with standards:

Identify source(s) of pollutants;
Identify additional best management practice(s) required to reduce pollutants in stormwater; and
Develop a schedule for implementation of additional best management practice(s).

Permitting Background

The Memorandum of Agreement, JPA 90-138, between the Arizona Department of Transportation (ADOT) and Gila River Indian Community (GRIC) provides a basis for development of permits for discharge of stormwater to the Gila Floodway. The permits are being developed as an agreement between two governmental entities and not for the purposes of complying with any tribal, state or federal statutory requirement.

The permit process is intended to provide Gila River Indian Community (GRIC) water users with a measure of protection of their surface water and aquifer supplies against pollutants introduced from the Southeast Valley Regional Drainage System (SEVRDS). Protection is expected to be accomplished by issuing two permits: a Conditional and a Final. Although the GRIC Department of Environmental Quality (DEQ) will prepare the permits, ultimate authority to issue permits lies with the Tribal Council. Work on the Conditional Permit can commence once any necessary resolutions regarding the proposed Scope of Work are approved by the GRIC Tribal Council and the following items are received from ADOT 1) receipt of the necessary technical information for the permit; 2) the permit application fee; and 3) ADOT agreement to work toward development of a Final Permit.

Permit adoption formalizes the need to: 1) set up an ongoing monitoring program; 2) determine effectiveness of the SEVRDS basins as a BMP; and 3) determine the risk to GRIC's sole source aquifer used for drinking purposes. A Conditional Permit will provide the vehicle for GRIC and SEVRDS participants to resolve questions regarding standards and performance and set up a monitoring program for implementation under the Final Permit.

The strategy behind two permits is pragmatic: a Conditional Permit will be issued to ADOT because: 1) the Conditional Permit will allow GRIC to confirm the accuracy of information from ADOT on the projected quality and quantity of water to be discharged to the Floodway before preparing the Final Permit; 2) the timing of various construction projects in the area is critical; and 3) there is a need to provide ADOT with a commitment from GRIC to issue a permit for discharge so ADOT may proceed with expending funds on construction of the Santan Channel. Under the Conditional Permit, discharges from the SEVRDS outfall to the Gila Floodway will be allowed once all parties agree that construction has been appropriately completed and the wetland is fully operational.

A Final Permit replacing the Conditional Permit will be issued to ADOT after all the required information has been compiled, the data have undergone a thorough technical review and a comprehensive public-involvement process has been completed. We anticipate that the development of the Final Permit will require 24 months. It will require BMPs designed to reduce stormwater pollution to the maximum extent practicable, and an ongoing monitoring program to characterize the quality of runoff to evaluate compliance with the conditions of the final permit.

The permits will reflect Community member values as well as scientific understanding of necessary water quality control measures. In this regard, the permits will utilize the latest available information on constituents of concern and the water quality criteria necessary to protect designated uses. These criteria are periodically updated to reflect new scientific information. Similarly, treatment or preventive measures (e.g. BMPs) effective in the control of pollutants may also be updated as new technologies become available, e.g., through the development of new stormwater BMPs by the Environmental Protection Agency. A Final Permit to discharge to the Gila Floodway will be issued for five years. The application to renew this permit will take into account updated or newly developed BMPs as well as any changes to water quality criteria used to protect Gila Floodway designated uses.

In addition to developing the permits, there is a need to establish an ongoing working relationship among all responsible parties to provide a forum for addressing questions and implementing solutions to identified problems. Areas of interest include determining 1) the local relationship between percolating surface water in the Floodway or wetlands and shallow and regional aquifer quality, 2) the source of possible contaminants in stormwater and other drainage waters, and 3) the dynamics of contaminants after they enter the Floodway. DEQ will work with all responsible parties to gain assurance that GRIC aquifers, which are used for drinking purposes, are not at risk from discharges of stormwater.

Elements of Water Quality Permits

Conditional Permit

The Conditional Permit to ADOT for discharge of stormwater to the Gila Floodway will contain requirements for ADOT to gather monitoring data to support the Final Permit including data to confirm the appropriateness of the designated uses applied to the Floodway and numeric and narrative water quality criteria required to protect those uses. As a minimum, this Conditional Permit will contain the following elements:

- Monitoring of stormwater expected to enter the wetlands/detention basins to the greatest extent possible before the Final Permit is completed;
- Estimates of quantities and qualities of water to be released to the Gila Floodway based on projected inflow qualities and wetlands/detention basin treatment capabilities;
- Determination of the relationship between stormwater discharges to the wetlands/ detention basins and the Gila Floodway and shallow and regional aquifers to determine if there is any risk to the quality of aquifer water used as a drinking water source;
- Development of a sampling and monitoring plan to provide the means to track the water quality of SEVRDS' discharges when they occur and determine the effect of these stormwater discharges on attainment of water quality standards. The sample plan will include installation of groundwater wells to characterize current aquifer water quality at the wetlands/detention basins. Also, monitoring data will provide the basis for evaluating changes in groundwater quality that may occur in the future that are not resulting from ADOT's activities, e.g., changes in regional land use; and
- Reporting plan development to include the type, frequency, and content of reports.

Once GRIC (DEQ, Law Office) and EcoPlan Associates develop a draft Conditional Permit, it will be presented to the Natural Resources Committee (NRC) for approval. Following NRC approval, the Conditional Permit requires approval from the Tribal Council. If policy makers approve the proposed permit without changes, these two steps will take at least two months. In addition, the vehicle for Conditional permit adoption will be a Memorandum of Agreement (MOA) patterned after other state and federal stormwater permits. Preparation and refinement of the MOA will involve legal review and comment as well as stakeholder coordination.

Final Permit

The Final Permit to ADOT for discharge of stormwater to the Gila Floodway will contain as a minimum the following elements:

- The water quality standards that must be met at the point of compliance for discharge to the Gila Floodway. Standards in the Final Permit are expected to be those for protection of ephemeral surface water designated uses, i.e., Partial Body Contact (PBC) Aquatic and Wildlife (ephemeral) (A&We) and Agricultural Livestock Watering (AgL)] and water quality criteria (i.e., numeric and narrative) required to protect those uses (for example, those adopted by Arizona DEQ, April 24, 1996; EPA approval currently pending).
- Water quality monitoring requirements for the life of the permit, including location(s) and frequency of monitoring and constituents of concern;
- Reporting requirements, including the type, frequency and content; and
- The basis for what constitutes non-compliance with a water quality standard and expectations of ADOT in the event non-compliance occurs.

The review process for the Final Permit is similar to the Conditional Permit. Both the NRC and Tribal Council must approve the permit. The vehicle for Final Permit adoption will again be a MOA that is subject to legal review and comment and stakeholder coordination. GRIC anticipates that the time between Conditional Permit and Final Permit adoption will be approximately 24 months (based on the flow chart developed by GRIC DEQ).

TASKS

Preparation of Conditional Permit

1.0 Develop interim aquifer and surface water sampling and monitoring requirements and key dates for implementation of activities.

1.1 Develop monitoring requirements and key dates for implementation

1.1.1 Determine parameters to be sampled
1.1.2 Determine frequency and location of sampling
1.1.3 Determine key dates
1.1.4 Initiate sampling

2.0 Develop reporting requirements including dates of completion.

3.0 Provide for review of Conditional Permit

3.1 Discuss draft Conditional Permit with stakeholders

3.1.1 Meet with necessary GRIC departments (DEQ, Law)
3.1.2 Meet with key Tribal members (e.g., council members, allottees) to gain sense of interest/concern
3.1.3 Meet with local, county, state, etc. agencies with stake in the permit

3.2 Discuss Conditional Permit and process with NRC

3.2.1 Distribute permitting concept for NRC review and discuss
3.2.2 Prepare and distribute draft permit and MOA for NRC review and comment
3.2.2 Obtain concurrence from NRC

3.3 Discuss Conditional permit and process with district members

3.3.1 Meet with Districts 4 and 6 members to explain permitting concept
3.3.2 Meet with Districts 4 and 6 members to explain draft permit and receive ideas

3.4 Discuss NRC-approved draft Conditional Permit and MOA with Tribal Council

3.4.1 Distribute permitting concept for Council review and discuss
3.4.2 Obtain adoption of Conditional Permit and MOA from Council

Preparation of Final Permit

4.0 Compile all Gila Floodway-related technical information on the SEVRDS

- 4.1 Review wetlands/detention basin and channel design with design engineers
- 4.2 Review 30% and 60% Design Memoranda and Wetlands Design Report for understanding of project
- 4.3 Review soil type, permeability, etc. and aquifer depth
- 4.4 Confirm SEVRDS design represents the BMP for stormwater

5.0 Develop water quality monitoring in accordance with the monitoring program set forth in the Conditional Permit

- 5.1 Determine parameters to be checked
- 5.2 Determine frequency and location of sampling, including point of compliance
- 5.3 Determine representative storm events
- 5.4 Determine sample collection procedures
- 5.5 Develop an understanding of aquifers in vicinity including depth, movement and direction
- 5.6 Determine likely disposition of released constituents from floodway and wetlands/detention basins
- 5.7 Determine performance level of wetlands by comparing the quality of inflow and outflow
- 5.8 Set date for collection and reporting of monitoring data

6.0 Develop well field monitoring to characterize baseline water quality of aquifer underlying the wetlands/detention basins

- 6.1 Determine status of existing well sampling results for quality
- 6.2 Determine locations for installation of monitoring wells
- 6.3 Install new monitoring well(s) for wetlands/detention basins
- 6.4 Implement monitoring and reporting on aquifer conditions

7.0 Validate assumptions used in development of Final Permit based on data generated under Conditional Permit

- 7.1 Confirm appropriateness of designated uses (A&We, PBC, AgL) applied to Gila Floodway
- 7.2 Confirm appropriateness of numeric water quality criteria used to protect designated uses
- 7.3 Confirm appropriateness of narrative water quality criteria used to protect surface

water and groundwater associated with Gila Floodway

8.0 Develop contingency plan to address permit compliance issues that could occur following implementation of the Final Permit

8.1 Work with stakeholders to develop process and reasonable schedule for addressing and correcting compliance problems.

8.2 Develop strategy for working with stakeholders to modify permit conditions in the event that the project design/operation needs to be changed, e.g., operation of the wetlands/detention basin needs to be modified, a significant change in source water to the Gila Floodway occurs, or the uses of the Gila Floodway change because of the operation of the Santan Channel.

9.0 Provide for review of Final Permit

9.1 Discuss draft permit with stakeholders

9.1.1 Meet with interested GRIC departments

9.1.2 Meet with key Tribal members (e.g., council members, allottees) to gain sense of interest/concern

9.1.3 Meet with local, county, state, etc. agencies with stake in the permit

9.2 Discuss permit and process with NRC

9.2.1 Distribute permitting concept for NRC review and discuss

9.2.2 Prepare and distribute draft permit and MOA for NRC review and comment

9.2.3 Obtain concurrence from NRC

9.3 Discuss permit and process with district members

9.3.1 Meet with Districts 4 and 6 members to explain permitting concept

9.3.2 Meet with District 6 members to explain draft Permit and receive ideas

9.4 Discuss NRC-approved draft permit and MOA with Tribal Council

9.4.1 Distribute permitting concept for Council review and discuss

9.4.2 Obtain adoption of permit and MOA from Council

Project Schedule

Task	Number of Months From Beginning of Process																				Total Hours
	1	2	3	4	5	6	7	8	9	10	11	12	13	14	15	16	17	18	19	20	
	Conditional Permit																				
1.0 Monitoring goals and dates	XX																				40
2.0 Reporting goals and dates	XX																				20
3.0 Provide for review of Conditional Permit																					200
3.1 Stakeholders	XXX																				
3.2 NRC		XX																			
3.3 District Members		XX																			
3.4 Tribal Council		X																			
	Final Permit																				
4.0 Technical information		XXXXXXXXXXXXXXXXXXXXXXXXXXXXXXXXXX																			120
5.0 Monitoring program		XXXXXXXXXXXXXXXXXXXXXXXXXXXXXXXXXX																			160
6.0 Well field monitoring		XXXXXXXXXXXXXXXXXXXXXXXXXXXXXXXXXX																			230/100*
7.0 Validate assumptions											XXXXXXXXXXXXX										200
8.0 Contingency plan											XXXXXXXXXXXXX										80
9.0 Review of Final Permit																					210
9.1 Stakeholders	XXXXXXXXXXXXXXXXXXXXXXXXXXXXXXXXXXXXXXXXXXXXXXXXXXXXXX																				
9.2 NRC															XXXXXX						
9.3 District Members															XXXXXX						
9.4 Tribal Council																XXXX					

* - 100 hours for GRIC installation of wells and collection of groundwater samples