22 MPV CVL0196

Property of
Flood Control District of MC Library
Please Return to
2801 W. Durango
Phoenix, AZ 85009

MARYVALE AREA FLOODING MITIGATION PROJECT PHASE I FCD 93-34

PRE-DESIGN REPORT

VOLUME B:

Appendix VI
Appendix VII

Coe & Van Loo Consultants, Inc.
4550 North 12th Street
Phoenix, Arizona 85014

APPENDIX VI
HYDROLOGIC MODELS

10-YEAR, 6-HOUR HEC-1 PROPOSED CONDITION OUTPUT

```
LINE          ID.......1.......2.......3.......4.......5.......6.......7.......8.......9......10

  1           ID        MARYVALE FLOOD MITIGATION STUDY
  2           ID        COE & VAN LOO CONSULTING, INC.
  3           ID         10-YEAR, 6-HOUR STORM
  4           ID        PROPOSED CONDITIONS - RETENTION BASIN ADDITIONS
  5           ID        FILE: H1PRP10            DATE:   1/22/96
  6           ID        JOB #: 95-0024-01
  7           ID
              *DIAGRAM
  8           IT      5                    300
  9           IO      5       0
 10           IN     15
 11           JD   1.95    0.01
 12           PC   .000    .008    .016    .025    .033    .041    .050    .058    .066    .074
 13           PC   .087    .099    .118    .138    .216    .377    .834    .911    .931    .950
 14           PC   .962    .972    .983    .991   1.000
 15           JD   1.94    0.50
 16           JD   1.91    2.80
 17           PC   .000    .009    .016    .025    .034    .042    .051    .059    .067    .076
 18           PC   .087    .100    .120    .163    .252    .451    .694    .837    .900    .938
 19           PC   .950    .963    .975    .988   1.000
 20           JD   1.80    16.0
 21           PC   .000    .015    .020    .030    .048    .063    .076    .090    .105    .119
 22           PC   .135    .152    .175    .222    .304    .472    .670    .796    .868    .912
 23           PC   .946    .960    .973    .987   1.000
 24           JD   1.58    90.0
 25           PC   .000    .021    .035    .051    .071    .087    .105    .125    .143    .160
 26           PC   .179    .201    .232    .281    .364    .500    .658    .773    .841    .888
 27           PC   .927    .945    .964    .982   1.000
 28           JD   1.11   500.0
 29           PC   .000    .024    .043    .059    .078    .098    .119    .141    .162    .186
 30           PC   .212    .239    .271    .321    .408    .515    .627    .735    .814    .864
 31           PC   .907    .930    .954    .977   1.000

 32           KK      A
 33           KM   SUB-BASIN A
 34           KM   6-HOUR RAINFALL, PATTERN NO. 1.00 WAS USED TO FIND TC & R FOR THIS BASIN
 35           KM   THIS BASIN USED RAINFALL REDUCTION FACTOR OF  .999
 36           KM     L =  .47  Kb = .029  Adj. Slope =   14.8
 37           BA    .095
 38           LG    .150    .250   4.300    .620  55.000
 39           UC    .308    .211
 40           UA       0       5      16      30      65      77      84      90      94      97
 41           UA     100

 42           KK      B
 43           KM   SUB-BASIN B
 44           KM   6-HOUR RAINFALL, PATTERN NO. 1.00 WAS USED TO FIND TC & R FOR THIS BASIN
 45           KM   THIS BASIN USED RAINFALL REDUCTION FACTOR OF  .996
 46           KM     L = 1.03  Kb = .026  Adj. Slope =   16.5
 47           BA    .294
 48           LG    .150    .250   5.670    .279  55.000
 49           UC    .446    .311
 50           UA       0       5      16      30      65      77      84      90      94      97
 51           UA     100
```

RUNOFF SUMMARY
FLOW IN CUBIC FEET PER SECOND
TIME IN HOURS, AREA IN SQUARE MILES

OPERATION	STATION	PEAK FLOW	TIME OF PEAK	AVERAGE FLOW FOR MAXIMUM PERIOD 6-HOUR	24-HOUR	72-HOUR	BASIN AREA	MAXIMUM STAGE	TIME OF MAX STAGE
HYDROGRAPH AT	A	114.	4.08	13.	3.	3.	.09		
HYDROGRAPH AT	B	305.	4.17	43.	11.	10.	.29		
DIVERSION TO	D39S	84.	3.83	26.	7.	6.	.29		
HYDROGRAPH AT	D39	221.	4.17	17.	4.	4.	.29		
HYDROGRAPH AT	C	235.	4.17	31.	8.	8.	.21		
ROUTED TO	R39	224.	4.17	31.	8.	8.	.21		
2 COMBINED AT	C40	444.	4.17	48.	12.	12.	.50		
ROUTED TO	R40	337.	4.42	48.	12.	12.	.50		
HYDROGRAPH AT	D	169.	4.17	25.	6.	6.	.17		
ROUTED TO	R43	146.	4.33	25.	6.	6.	.17		
HYDROGRAPH AT	E	216.	4.17	31.	8.	8.	.20		
3 COMBINED AT	C43	556.	4.42	99.	25.	24.	.87		
ROUTED TO	S43	481.	4.58	94.	25.	24.	.87		
DIVERSION TO	D43S	27.	3.42	27.	8.	8.	.87		
HYDROGRAPH AT	D43	454.	4.58	67.	17.	16.	.87		
ROUTED TO	R44	454.	4.58	67.	17.	16.	.87		
HYDROGRAPH AT	F	337.	4.25	46.	12.	11.	.50		
ROUTED TO	R45	331.	4.33	46.	12.	11.	.50		
2 COMBINED AT	C45	623.	4.58	104.	26.	25.	1.37		
HYDROGRAPH AT	G	64.	4.42	17.	4.	4.	.12		
ROUTED TO	R47	51.	5.33	17.	4.	4.	.12		
HYDROGRAPH AT	H	60.	4.83	25.	7.	6.	.22		
3 COMBINED AT	C47	658.	4.58	138.	35.	34.	1.71		
ROUTED TO	S47	577.	4.75	138.	35.	34.	1.71		
DIVERSION TO	D47S	183.	4.75	24.	6.	6.	1.71		
HYDROGRAPH AT	D47	394.	4.75	114.	29.	28.	1.71		
DIVERSION TO	CRIT	155.	4.50	81.	21.	20.	1.71		
HYDROGRAPH AT	D47C	239.	4.75	32.	8.	8.	1.71		
ROUTED TO	R48	224.	5.00	32.	8.	8.	1.71		
HYDROGRAPH AT	I	307.	4.25	50.	12.	12.	.44		

2 COMBINED AT	C49	305.	4.92	72.	18.	18.	2.15
HYDROGRAPH AT	J	238.	4.33	51.	13.	12.	.39
2 COMBINED AT	C51	409.	4.92	114.	29.	28.	2.54
DIVERSION TO	D51S	20.	3.25	17.	5.	4.	2.54
HYDROGRAPH AT	D51	389.	4.92	97.	24.	23.	2.54
HYDROGRAPH AT	K	195.	4.17	28.	7.	7.	.22
HYDROGRAPH AT	L'	138.	4.33	30.	8.	7.	.23
ROUTED TO	RL'	130.	4.50	30.	8.	7.	.23
HYDROGRAPH AT	M'	118.	4.08	13.	3.	3.	.09
ROUTED TO	RM'	108.	4.17	13.	3.	3.	.09
2 COMBINED AT	CCHAN	205.	4.33	42.	11.	10.	.32
3 COMBINED AT	CB	598.	4.33	155.	39.	38.	3.07
ROUTED TO	SB	87.	6.00	67.	31.	30.	3.07
HYDROGRAPH AT	RTN47	155.	4.50	81.	21.	20.	1.71
HYDROGRAPH AT	RTN51	20.	3.25	17.	5.	4.	2.54
2 COMBINED AT	CSD1	175.	4.50	96.	26.	25.	2.54
2 COMBINED AT	CSD2	251.	5.92	144.	53.	51.	5.61
HYDROGRAPH AT	L	189.	4.33	41.	11.	10.	.31
ROUTED TO	R59	170.	4.58	41.	11.	10.	.31
HYDROGRAPH AT	M	108.	4.08	12.	3.	3.	.08
HYDROGRAPH AT	N	364.	4.25	56.	14.	14.	.38
ROUTED TO	RCM	346.	4.33	56.	14.	14.	.38
HYDROGRAPH AT	O	565.	4.25	90.	23.	22.	.66
2 COMBINED AT	CCM	786.	4.25	140.	35.	34.	1.04
ROUTED TO	RCP	725.	4.50	139.	35.	34.	1.04
HYDROGRAPH AT	P	300.	4.25	44.	11.	11.	.40
2 COMBINED AT	CCP	855.	4.50	176.	45.	43.	1.44
DIVERSION TO	DGCW	642.	4.50	79.	20.	19.	1.44
HYDROGRAPH AT	DGC	213.	4.08	96.	25.	24.	1.44
ROUTED TO	R58	213.	5.42	96.	25.	24.	1.44
3 COMBINED AT	C59	372.	4.58	144.	37.	36.	1.83
ROUTED TO	S59	278.	5.58	144.	37.	36.	1.83
DIVERSION TO	D59S	272.	5.58	144.	37.	36.	1.83
HYDROGRAPH AT	D59W	6.	5.58	1.	0.	0.	1.83
HYDROGRAPH AT	RTNGC	642.	4.50	79.	20.	19.	1.44

ROUTED TO	RGC	583.	4.83	79.	20.	19.	1.44
HYDROGRAPH AT	Q	192.	4.42	44.	11.	11.	.47
2 COMBINED AT	CGC	956.	4.75	141.	35.	34.	.47
ROUTED TO	SGC	922.	4.83	140.	35.	34.	.47
ROUTED TO	R63	896.	4.83	140.	35.	34.	.47
HYDROGRAPH AT	R	191.	4.17	24.	6.	6.	.18
3 COMBINED AT	C63	879.	4.83	161.	41.	39.	2.49
ROUTED TO	SA	87.	5.42	58.	31.	30.	2.49
DIVERSION TO	DSAW	20.	4.50	20.	15.	14.	2.49
HYDROGRAPH AT	DSA	67.	5.42	38.	16.	15.	2.49
DIVERSION TO	DSAE	35.	5.50	35.	15.	14.	2.49
HYDROGRAPH AT	DWRA	32.	5.42	3.	1.	1.	2.49
HYDROGRAPH AT	RTNSAE	35.	5.50	35.	15.	14.	2.49
HYDROGRAPH AT	RTN59	272.	5.58	144.	37.	36.	1.83
2 COMBINED AT	C60	306.	5.58	163.	52.	50.	3.02
HYDROGRAPH AT	S	437.	4.08	44.	11.	11.	.30
ROUTED TO	R57	297.	4.42	44.	11.	11.	.30
HYDROGRAPH AT	T	412.	4.17	53.	13.	13.	.36
2 COMBINED AT	C58	577.	4.25	95.	24.	23.	.66
ROUTED TO	RMO	478.	4.58	95.	24.	23.	.66
HYDROGRAPH AT	U	103.	4.25	18.	5.	4.	.13
ROUTED TO	RBH	98.	4.33	18.	5.	4.	.13
HYDROGRAPH AT	V	203.	4.17	26.	7.	6.	.17
2 COMBINED AT	CBH	287.	4.17	44.	11.	11.	.30
ROUTED TO	R61	208.	4.58	44.	11.	11.	.30
HYDROGRAPH AT	W	631.	4.25	92.	23.	22.	.66
3 COMBINED AT	CCK	946.	4.50	219.	56.	53.	1.62
ROUTED TO	RCK	880.	4.83	217.	56.	53.	1.62
HYDROGRAPH AT	X	471.	4.17	64.	16.	16.	.47
2 COMBINED AT	C67	998.	4.75	272.	70.	67.	2.09

*** NORMAL END OF HEC-1 ***

2-YEAR, 6-HOUR HEC-1 PROPOSED CONDITION OUTPUT

```
LINE          ID.......1.......2.......3.......4.......5.......6.......7.......8.......9......10

  1           ID        MARYVALE FLOOD MITIGATION STUDY
  2           ID        COE & VAN LOO CONSULTING, INC.
  3           ID        2 - YEAR, 6-HOUR STORM
  4           ID        PROPOSED CONDITIONS - RETENTION BASIN ADDITIONS
  5           ID        FILE: H1PRP2            DATE:   1/22/96
  6           ID        JOB #: 95-0024-01
  7           ID
              *DIAGRAM
  8           IT      5                     300
  9           IO      5       0
 10           IN     15
 11           JD   1.17    0.01
 12           PC   .000    .008    .016    .025    .033    .041    .050    .058    .066    .074
 13           PC   .087    .099    .118    .138    .216    .377    .834    .911    .931    .950
 14           PC   .962    .972    .983    .991   1.000
 15           JD   1.16    0.50
 16           JD   1.15    2.80
 17           PC   .000    .009    .016    .025    .034    .042    .051    .059    .067    .076
 18           PC   .087    .100    .120    .163    .252    .451    .694    .837    .900    .938
 19           PC   .950    .963    .975    .988   1.000
 20           JD   1.08    16.0
 21           PC   .000    .015    .020    .030    .048    .063    .076    .090    .105    .119
 22           PC   .135    .152    .175    .222    .304    .472    .670    .796    .868    .912
 23           PC   .946    .960    .973    .987   1.000
 24           JD   0.95    90.0
 25           PC   .000    .021    .035    .051    .071    .087    .105    .125    .143    .160
 26           PC   .179    .201    .232    .281    .364    .500    .658    .773    .841    .888
 27           PC   .927    .945    .964    .982   1.000
 28           JD   0.67   500.0
 29           PC   .000    .024    .043    .059    .078    .098    .119    .141    .162    .186
 30           PC   .212    .239    .271    .321    .408    .515    .627    .735    .814    .864
 31           PC   .907    .930    .954    .977   1.000

 32           KK      A
 33           KM   SUB-BASIN A
 34           KM   6-HOUR RAINFALL, PATTERN NO. 1.00 WAS USED TO FIND TC & R FOR THIS BASIN
 35           KM   THIS BASIN USED RAINFALL REDUCTION FACTOR OF  .999
 36           KM     L =  .47  Kb = .029  Adj. Slope =   14.8
 37           BA   .095
 38           LG   .150    .250   4.300    .620  55.000
 39           UC   .308    .211
 40           UA      0       5      16      30      65      77      84      90      94      97
 41           UA    100

 42           KK      B
 43           KM   SUB-BASIN B
 44           KM   6-HOUR RAINFALL, PATTERN NO. 1.00 WAS USED TO FIND TC & R FOR THIS BASIN
 45           KM   THIS BASIN USED RAINFALL REDUCTION FACTOR OF  .996
 46           KM     L = 1.03  Kb = .026  Adj. Slope =   16.5
 47           BA   .294
 48           LG   .150    .250   5.670    .279  55.000
 49           UC   .446    .311
 50           UA      0       5      16      30      65      77      84      90      94      97
 51           UA    100
```

RUNOFF SUMMARY
FLOW IN CUBIC FEET PER SECOND
TIME IN HOURS, AREA IN SQUARE MILES

OPERATION	STATION	PEAK FLOW	TIME OF PEAK	AVERAGE FLOW FOR MAXIMUM PERIOD 6-HOUR	24-HOUR	72-HOUR	BASIN AREA	MAXIMUM STAGE	TIME OF MAX STAGE
HYDROGRAPH AT	A	53.	4.08	7.	2.	2.	.09		
HYDROGRAPH AT	B	157.	4.17	23.	6.	6.	.29		
DIVERSION TO	D39S	84.	4.00	19.	5.	5.	.29		
HYDROGRAPH AT	D39	73.	4.17	4.	1.	1.	.29		
HYDROGRAPH AT	C	123.	4.17	17.	4.	4.	.21		
ROUTED TO	R39	114.	4.25	17.	4.	4.	.21		
2 COMBINED AT	C40	183.	4.17	21.	5.	5.	.50		
ROUTED TO	R40	110.	4.50	21.	5.	5.	.50		
HYDROGRAPH AT	D	89.	4.17	14.	3.	3.	.17		
ROUTED TO	R43	67.	4.33	14.	3.	3.	.17		
HYDROGRAPH AT	E	115.	4.17	17.	4.	4.	.20		
3 COMBINED AT	C43	213.	4.42	48.	12.	12.	.87		
ROUTED TO	S43	155.	4.75	46.	12.	12.	.87		
DIVERSION TO	D43S	27.	3.58	26.	7.	7.	.87		
HYDROGRAPH AT	D43	128.	4.75	20.	5.	5.	.87		
ROUTED TO	R44	121.	4.83	20.	5.	5.	.87		
HYDROGRAPH AT	F	137.	4.25	20.	5.	5.	.50		
ROUTED TO	R45	130.	4.42	20.	5.	5.	.50		
2 COMBINED AT	C45	141.	4.83	30.	8.	7.	1.37		
HYDROGRAPH AT	G	34.	4.42	9.	2.	2.	.12		
ROUTED TO	R47	27.	5.33	9.	2.	2.	.12		
HYDROGRAPH AT	H	29.	4.83	12.	3.	3.	.22		
3 COMBINED AT	C47	167.	4.92	45.	12.	11.	1.71		
ROUTED TO	S47	132.	5.17	45.	12.	11.	1.71		
DIVERSION TO	D47S	4.	5.17	0.	0.	0.	1.71		
HYDROGRAPH AT	D47	128.	5.17	45.	12.	11.	1.71		
DIVERSION TO	CRIT	121.	5.33	45.	12.	11.	1.71		
HYDROGRAPH AT	D47C	7.	5.17	1.	0.	0.	1.71		
ROUTED TO	R48	4.	5.50	1.	0.	0.	1.71		
HYDROGRAPH AT	I	135.	4.25	23.	6.	6.	.44		

2 COMBINED AT	C49	76.	4.25	18.	4.	4.	2.15
HYDROGRAPH AT	J	118.	4.33	26.	7.	6.	.39
2 COMBINED AT	C51	144.	4.33	38.	10.	9.	2.54
DIVERSION TO	D51S	20.	3.58	14.	4.	4.	2.54
HYDROGRAPH AT	D51	124.	4.33	24.	6.	6.	2.54
HYDROGRAPH AT	K	94.	4.17	14.	4.	3.	.22
HYDROGRAPH AT	L'	68.	4.33	15.	4.	4.	.23
ROUTED TO	RL'	61.	4.58	15.	4.	4.	.23
HYDROGRAPH AT	M'	59.	4.08	6.	2.	2.	.09
ROUTED TO	RM'	51.	4.25	6.	2.	2.	.09
2 COMBINED AT	CCHAN	96.	4.33	22.	6.	5.	.32
3 COMBINED AT	CB	225.	4.33	52.	13.	13.	3.07
ROUTED TO	SB	18.	6.08	17.	10.	9.	3.07
HYDROGRAPH AT	RTN47	121.	5.33	45.	12.	11.	1.71
HYDROGRAPH AT	RTN51	20.	3.58	14.	4.	4.	2.54
2 COMBINED AT	CSD1	130.	5.33	53.	14.	14.	2.54
2 COMBINED AT	CSD2	134.	5.33	60.	22.	22.	5.61
HYDROGRAPH AT	L	93.	4.33	21.	5.	5.	.31
ROUTED TO	R59	75.	4.83	21.	5.	5.	.31
HYDROGRAPH AT	M	54.	4.08	6.	1.	1.	.08
HYDROGRAPH AT	N	188.	4.25	30.	8.	7.	.38
ROUTED TO	RCM	170.	4.42	30.	8.	7.	.38
HYDROGRAPH AT	O	279.	4.25	47.	12.	11.	.66
2 COMBINED AT	CCM	373.	4.33	73.	18.	18.	1.04
ROUTED TO	RCP	326.	4.58	72.	18.	18.	1.04
HYDROGRAPH AT	P	130.	4.25	21.	5.	5.	.40
2 COMBINED AT	CCP	358.	4.58	87.	22.	21.	1.44
DIVERSION TO	DGCW	145.	4.58	13.	3.	3.	1.44
HYDROGRAPH AT	DGC	213.	4.42	74.	19.	18.	1.44
ROUTED TO	R58	213.	5.08	74.	19.	18.	1.44
3 COMBINED AT	C59	277.	4.75	97.	25.	24.	1.83
ROUTED TO	S59	228.	5.33	97.	25.	24.	1.83
DIVERSION TO	D59S	228.	5.33	97.	25.	24.	1.83
HYDROGRAPH AT	D59W	0.	.08	0.	0.	0.	1.83
HYDROGRAPH AT	RTNGC	145.	4.58	13.	3.	3.	1.44

ROUTED TO	RGC	72.	5.17	13.	3.	3.	1.44
HYDROGRAPH AT	Q	75.	4.42	18.	5.	4.	.47
2 COMBINED AT	CGC	222.	5.08	41.	10.	10.	.47
ROUTED TO	SGC	190.	5.25	41.	10.	10.	.47
ROUTED TO	R63	184.	5.33	41.	10.	10.	.47
HYDROGRAPH AT	R	93.	4.17	11.	3.	3.	.18
3 COMBINED AT	C63	182.	5.33	50.	13.	12.	2.49
ROUTED TO	SA	21.	6.83	17.	7.	7.	2.49
DIVERSION TO	DSAW	20.	6.92	16.	7.	6.	2.49
HYDROGRAPH AT	DSA	2.	6.50	1.	0.	0.	2.49
DIVERSION TO	DSAE	1.	5.67	1.	0.	0.	2.49
HYDROGRAPH AT	DWRA	1.	6.50	0.	0.	0.	2.49
HYDROGRAPH AT	RTNSAE	1.	5.67	1.	0.	0.	2.49
HYDROGRAPH AT	RTN59	228.	5.33	97.	25.	24.	1.83
2 COMBINED AT	C60	225.	5.33	95.	25.	24.	3.02
HYDROGRAPH AT	S	222.	4.08	24.	6.	6.	.30
ROUTED TO	R57	129.	4.50	24.	6.	6.	.30
HYDROGRAPH AT	T	213.	4.17	29.	7.	7.	.36
2 COMBINED AT	C58	247.	4.25	51.	13.	12.	.66
ROUTED TO	RMO	194.	4.75	51.	13.	12.	.66
HYDROGRAPH AT	U	52.	4.25	10.	2.	2.	.13
ROUTED TO	RBH	46.	4.42	10.	2.	2.	.13
HYDROGRAPH AT	V	106.	4.17	14.	3.	3.	.17
2 COMBINED AT	CBH	142.	4.17	23.	6.	6.	.30
ROUTED TO	R61	105.	4.67	23.	6.	6.	.30
HYDROGRAPH AT	W	313.	4.25	45.	11.	11.	.66
3 COMBINED AT	CCK	383.	4.42	109.	28.	27.	1.62
ROUTED TO	RCK	350.	5.00	109.	28.	27.	1.62
HYDROGRAPH AT	X	231.	4.25	32.	8.	8.	.47
2 COMBINED AT	C67	379.	4.92	132.	34.	33.	2.09

*** NORMAL END OF HEC-1 ***

100-YEAR, 24-HOUR HEC-1 PROPOSED CONDITION OUTPUT

```
LINE          ID.......1.......2.......3.......4.......5.......6.......7.......8.......9......10

  1           ID        MARYVALE FLOODING MITIGATION STUDY
  2           ID        COE & VAN LOO CONSULTANTS, INC.
  3           ID        100-YEAR, 24-HOUR STORM
  4           ID        PROPOSED CONDITIONS
  5           ID        FILE: H1P124          DATE: 1/24/96
  6           ID        JOB #: 95-0024-01
  7           ID
              *DIAGRAM
  8           IT      5                   300
  9           IO      5       0
 10           IN     15
 11           JD   3.67    0.01
 12           PC   .000    .002    .005    .008    .011    .014    .017    .020    .023    .026
 13           PC   .029    .032    .035    .038    .041    .044    .048    .052    .056    .060
 14           PC   .064    .068    .072    .076    .080    .085    .090    .095    .100    .105
 15           PC   .110    .115    .120    .126    .133    .140    .147    .155    .163    .172
 16           PC   .181    .191    .203    .218    .236    .257    .283    .387    .663    .707
 17           PC   .735    .758    .776    .791    .804    .815    .825    .834    .842    .849
 18           PC   .856    .863    .869    .875    .881    .887    .893    .898    .903    .908
 19           PC   .913    .918    .922    .926    .930    .934    .938    .942    .946    .950
 20           PC   .953    .956    .959    .962    .965    .968    .971    .974    .977    .980
 21           PC   .983    .986    .989    .992    .995    .998   1.000
 22           JD   3.45   10.00
 23           JD   3.30   30.00
 24           JD   3.16   60.00
 25           JD   3.10   90.00
 26           JD   3.06  120.00
 27           JD   3.03  150.00
 28           JD   2.94  300.00
 29           JD   2.86  500.00

 30           KK      A
 31           KM   SUB-BASIN A
 32           KM   6-HOUR RAINFALL, PATTERN NO. 1.00 WAS USED TO FIND TC & R FOR THIS BASIN
 33           KM   THIS BASIN USED RAINFALL REDUCTION FACTOR OF  .999
 34           KM     L =  .47  Kb = .029  Adj. Slope =   14.8
 35           BA    .095
 36           LG    .150    .250   4.300    .620  55.000
 37           UC    .308    .211
 38           UA       0       5      16      30      65      77      84      90      94      97
 39           UA     100

 40           KK      B
 41           KM   SUB-BASIN B
 42           KM   6-HOUR RAINFALL, PATTERN NO. 1.00 WAS USED TO FIND TC & R FOR THIS BASIN
 43           KM   THIS BASIN USED RAINFALL REDUCTION FACTOR OF  .996
 44           KM     L = 1.03  Kb = .026  Adj. Slope =   16.5
 45           BA    .294
 46           LG    .150    .250   5.670    .279  55.000
 47           UC    .446    .311
 48           UA       0       5      16      30      65      77      84      90      94      97
 49           UA     100
```

RUNOFF SUMMARY
FLOW IN CUBIC FEET PER SECOND
TIME IN HOURS, AREA IN SQUARE MILES

OPERATION	STATION	PEAK FLOW	TIME OF PEAK	AVERAGE FLOW FOR MAXIMUM PERIOD 6-HOUR	24-HOUR	72-HOUR	BASIN AREA	MAXIMUM STAGE	TIME OF MAX STAGE
HYDROGRAPH AT	A	137.	12.08	18.	6.	6.	.09		
HYDROGRAPH AT	B	365.	12.17	58.	19.	18.	.29		
DIVERSION TO	D39S	84.	11.83	34.	13.	12.	.29		
HYDROGRAPH AT	D39	281.	12.17	24.	6.	6.	.29		
HYDROGRAPH AT	C	277.	12.17	42.	14.	13.	.21		
ROUTED TO	R39	271.	12.17	42.	14.	13.	.21		
2 COMBINED AT	C40	547.	12.17	66.	20.	19.	.50		
ROUTED TO	R40	435.	12.42	66.	20.	19.	.50		
HYDROGRAPH AT	D	201.	12.17	34.	11.	11.	.17		
ROUTED TO	R43	177.	12.25	34.	11.	11.	.17		
HYDROGRAPH AT	E	254.	12.17	42.	14.	14.	.20		
3 COMBINED AT	C43	782.	12.33	140.	44.	43.	.87		
ROUTED TO	S43	680.	12.50	130.	44.	43.	.87		
DIVERSION TO	D43S	27.	10.50	27.	19.	18.	.87		
HYDROGRAPH AT	D43	653.	12.50	103.	26.	25.	.87		
ROUTED TO	R44	644.	12.58	103.	26.	25.	.87		
HYDROGRAPH AT	F	450.	12.25	66.	18.	17.	.50		
ROUTED TO	R45	444.	12.33	66.	18.	17.	.50		
2 COMBINED AT	C45	1012.	12.50	167.	43.	42.	1.37		
HYDROGRAPH AT	G	78.	12.42	24.	8.	8.	.12		
ROUTED TO	R47	64.	13.08	24.	8.	7.	.12		
HYDROGRAPH AT	H	78.	12.83	35.	11.	11.	.22		
3 COMBINED AT	C47	1095.	12.50	224.	62.	60.	1.71		
ROUTED TO	S47	984.	12.67	224.	62.	60.	1.71		
DIVERSION TO	D47S	362.	12.67	54.	13.	13.	1.71		
HYDROGRAPH AT	D47	622.	12.67	170.	48.	47.	1.71		
DIVERSION TO	CRIT	155.	12.33	99.	31.	30.	1.71		
HYDROGRAPH AT	D47C	467.	12.67	71.	18.	17.	1.71		
ROUTED TO	R48	456.	12.75	71.	18.	17.	1.71		
HYDROGRAPH AT	I	394.	12.25	69.	21.	20.	.44		

2 COMBINED AT	C49	645.	12.67	138.	38.	37.	2.15
HYDROGRAPH AT	J	293.	12.33	70.	22.	21.	.39
2 COMBINED AT	C51	866.	12.67	206.	60.	58.	2.54
DIVERSION TO	D51S	20.	9.75	20.	13.	13.	2.54
HYDROGRAPH AT	D51	846.	12.67	186.	47.	45.	2.54
HYDROGRAPH AT	K	243.	12.17	38.	12.	12.	.22
HYDROGRAPH AT	L'	171.	12.33	42.	13.	13.	.23
ROUTED TO	RL'	163.	12.50	42.	13.	13.	.23
HYDROGRAPH AT	M'	143.	12.08	17.	5.	5.	.09
ROUTED TO	RM'	133.	12.17	17.	5.	5.	.09
2 COMBINED AT	CCHAN	256.	12.33	59.	18.	18.	.32
3 COMBINED AT	CB	1125.	12.67	279.	76.	73.	3.07
ROUTED TO	SB	97.	14.33	96.	49.	47.	3.07
HYDROGRAPH AT	RTN47	155.	12.33	99.	31.	30.	1.71
HYDROGRAPH AT	RTN51	20.	9.75	20.	13.	13.	2.54
2 COMBINED AT	CSD1	175.	12.33	118.	44.	42.	2.54
2 COMBINED AT	CSD2	272.	14.33	205.	93.	89.	5.61
HYDROGRAPH AT	L	234.	12.33	57.	18.	18.	.31
ROUTED TO	R59	216.	12.58	57.	18.	18.	.31
HYDROGRAPH AT	M	131.	12.08	16.	5.	5.	.08
HYDROGRAPH AT	N	435.	12.17	75.	25.	24.	.38
ROUTED TO	RCM	419.	12.33	75.	25.	24.	.38
HYDROGRAPH AT	O	719.	12.25	123.	40.	38.	.66
2 COMBINED AT	CCM	1110.	12.25	197.	64.	62.	1.04
ROUTED TO	RCP	1020.	12.50	196.	64.	61.	1.04
HYDROGRAPH AT	P	384.	12.25	62.	19.	18.	.40
2 COMBINED AT	CCP	1306.	12.42	257.	82.	79.	1.44
DIVERSION TO	DGCW	1093.	12.42	137.	34.	33.	1.44
HYDROGRAPH AT	DGC	213.	11.92	120.	48.	46.	1.44
ROUTED TO	R58	213.	13.08	120.	48.	46.	1.44
3 COMBINED AT	C59	462.	12.50	191.	70.	67.	1.83
ROUTED TO	S59	339.	13.25	191.	70.	67.	1.83
DIVERSION TO	D59S	272.	12.67	178.	67.	65.	1.83
HYDROGRAPH AT	D59W	67.	13.25	12.	3.	3.	1.83
HYDROGRAPH AT	RTNGC	1093.	12.42	137.	34.	33.	1.44

ROUTED TO	RGC	1045.	12.67	137.	34.	33.	1.44
HYDROGRAPH AT	Q	265.	12.42	65.	19.	18.	.47
2 COMBINED AT	CGC	1305.	12.67	204.	53.	51.	.47
ROUTED TO	SGC	1270.	12.75	196.	51.	49.	.47
ROUTED TO	R63	1263.	12.75	196.	51.	49.	.47
HYDROGRAPH AT	R	234.	12.17	33.	10.	9.	.18
3 COMBINED AT	C63	1315.	12.75	238.	63.	61.	2.49
ROUTED TO	SA	1046.	13.00	160.	55.	53.	2.49
DIVERSION TO	DSAW	20.	12.33	20.	12.	12.	2.49
HYDROGRAPH AT	DSA	1026.	13.00	140.	43.	42.	2.49
DIVERSION TO	DSAE	35.	12.92	35.	16.	16.	2.49
HYDROGRAPH AT	DWRA	991.	13.00	107.	27.	26.	2.49
HYDROGRAPH AT	RTNSAE	35.	12.92	35.	16.	16.	2.49
HYDROGRAPH AT	RTN59	272.	12.67	178.	67.	65.	1.83
2 COMBINED AT	C60	307.	12.92	202.	83.	80.	3.02
HYDROGRAPH AT	S	516.	12.08	59.	19.	19.	.30
ROUTED TO	R57	383.	12.33	59.	19.	19.	.30
HYDROGRAPH AT	T	488.	12.17	72.	24.	23.	.36
2 COMBINED AT	C58	762.	12.25	130.	43.	41.	.66
ROUTED TO	RMO	647.	12.50	130.	42.	41.	.66
HYDROGRAPH AT	U	125.	12.17	25.	8.	8.	.13
ROUTED TO	RBH	120.	12.33	25.	8.	8.	.13
HYDROGRAPH AT	V	241.	12.17	35.	11.	11.	.17
2 COMBINED AT	CBH	346.	12.17	59.	19.	18.	.30
ROUTED TO	R61	280.	12.50	59.	19.	18.	.30
HYDROGRAPH AT	W	792.	12.25	127.	38.	37.	.66
3 COMBINED AT	CCK	1447.	12.50	312.	98.	95.	1.62
ROUTED TO	RCK	1348.	12.67	311.	98.	94.	1.62
HYDROGRAPH AT	X	573.	12.17	87.	26.	25.	.47
2 COMBINED AT	C67	1584.	12.67	395.	123.	119.	2.09

*** NORMAL END OF HEC-1 ***

```
****************************************
*                                      *
*   FLOOD HYDROGRAPH PACKAGE  (HEC-1)  *
*            SEPTEMBER 1990            *
*             VERSION 4.0              *
*                                      *
*  RUN DATE  01/22/1996  TIME  11:30:39 *
*                                      *
****************************************
```

```
****************************************
*                                      *
*    U.S. ARMY CORPS OF ENGINEERS      *
*    HYDROLOGIC ENGINEERING CENTER     *
*          609 SECOND STREET           *
*       DAVIS, CALIFORNIA 95616        *
*          (916) 756-1104              *
*                                      *
****************************************
```

```
X     X  XXXXXXX   XXXXX          X
X     X  X        X     X        XX
X     X  X        X               X
XXXXXXX  XXXX     X       XXXXX   X
X     X  X        X               X
X     X  X        X     X         X
X     X  XXXXXXX   XXXXX         XXX
```

THIS PROGRAM REPLACES ALL PREVIOUS VERSIONS OF HEC-1 KNOWN AS HEC1 (JAN 73), HEC1GS, HEC1DB, AND HEC1KW.

THE DEFINITIONS OF VARIABLES -RTIMP- AND -RTIOR- HAVE CHANGED FROM THOSE USED WITH THE 1973-STYLE INPUT STRUCTURE.
THE DEFINITION OF -AMSKK- ON RM-CARD WAS CHANGED WITH REVISIONS DATED 28 SEP 81. THIS IS THE FORTRAN77 VERSION
NEW OPTIONS: DAMBREAK OUTFLOW SUBMERGENCE , SINGLE EVENT DAMAGE CALCULATION, DSS:WRITE STAGE FREQUENCY,
DSS:READ TIME SERIES AT DESIRED CALCULATION INTERVAL LOSS RATE:GREEN AND AMPT INFILTRATION
KINEMATIC WAVE: NEW FINITE DIFFERENCE ALGORITHM

```
LINE          ID.......1.......2.......3.......4.......5.......6.......7.......8.......9......10

  1           ID        MARYVALE FLOOD MITIGATION STUDY
  2           ID        COE & VAN LOO CONSULTING, INC.
  3           ID        100-YEAR, 6-HOUR STORM
  4           ID        EXISTING CONDITIONS MODIFIED FOR DIVERSION AT 59TH AVE AND GOLF COURSE
  5           ID        FILE: H1EX100            DATE:   1/22/96
  6           ID        JOB #: 95-0024-01
  7           ID
              *DIAGRAM
  8           IT      5                    300
  9           IO     -5       0
 10           IN     15
 11           JD   3.05    0.01
 12           PC   .000    .008    .016    .025    .033    .041    .050    .058    .066    .074
 13           PC   .087    .099    .118    .138    .216    .377    .834    .911    .931    .950
 14           PC   .962    .972    .983    .991   1.000
 15           JD   3.03    0.50
 16           JD   2.99    2.80
 17           PC   .000    .009    .016    .025    .034    .042    .051    .059    .067    .076
 18           PC   .087    .100    .120    .163    .252    .451    .694    .837    .900    .938
 19           PC   .950    .963    .975    .988   1.000
 20           JD   2.81    16.0
 21           PC   .000    .015    .020    .030    .048    .063    .076    .090    .105    .119
 22           PC   .135    .152    .175    .222    .304    .472    .670    .796    .868    .912
 23           PC   .946    .960    .973    .987   1.000
 24           JD   2.47    90.0
 25           PC   .000    .021    .035    .051    .071    .087    .105    .125    .143    .160
 26           PC   .179    .201    .232    .281    .364    .500    .658    .773    .841    .888
 27           PC   .927    .945    .964    .982   1.000
 28           JD   1.74   500.0
 29           PC   .000    .024    .043    .059    .078    .098    .119    .141    .162    .186
 30           PC   .212    .239    .271    .321    .408    .515    .627    .735    .814    .864
 31           PC   .907    .930    .954    .977   1.000

 32           KK      A
 33           KM   SUB-BASIN A
 34           KM   6-HOUR RAINFALL, PATTERN NO. 1.00 WAS USED TO FIND TC & R FOR THIS BASIN
 35           KM   THIS BASIN USED RAINFALL REDUCTION FACTOR OF  .999
 36           KM     L =  .47  Kb = .029  Adj. Slope =   14.8
 37           BA   .095
 38           LG   .150    .250   4.300    .620  55.000
 39           UC   .308    .211
 40           UA      0       5      16      30      65      77      84      90      94      97
 41           UA    100

 42           KK      B
 43           KM   SUB-BASIN B
 44           KM   6-HOUR RAINFALL, PATTERN NO. 1.00 WAS USED TO FIND TC & R FOR THIS BASIN
 45           KM   THIS BASIN USED RAINFALL REDUCTION FACTOR OF  .996
 46           KM     L = 1.03  Kb = .026  Adj. Slope =   16.5
 47           BA   .294
 48           LG   .150    .250   5.670    .279  55.000
 49           UC   .446    .311
 50           UA      0       5      16      30      65      77      84      90      94      97
 51           UA    100
```

```
LINE          ID.......1.......2.......3.......4.......5.......6.......7.......8.......9......10

  52          KK     D39        FLOW DIVERSION AT 39TH AVE
  53          DT    D39S
  54          DI       0      50     200     600
  55          DQ       0      84      84      84

  56          KK       C
  57          KM   SUB-BASIN C
  58          KM   6-HOUR RAINFALL, PATTERN NO. 1.00 WAS USED TO FIND TC & R FOR THIS BASIN
  59          KM   THIS BASIN USED RAINFALL REDUCTION FACTOR OF  .997
  60          KM     L =  .93  Kb = .027  Adj. Slope =   22.8
  61          BA    .209
  62          LG    .145    .250   3.500    .392  57.630
  63          UC    .371    .282
  64          UA       0       5      16      30      65      77      84      90      94      97
  65          UA     100

  66          KK     R39
  67          KM        ROUTING SUBBASIN C ALONG 39TH AVE. TO CP 40
  68          RS       1    ELEV       0
  69          RC   0.025   0.016   0.025    1600  0.0042
  70          RX    69.7    69.8    69.9      70     130   130.1   130.2   130.3
  71          RY       5       2       1       0       0       1       2       5

  72          KK     C40        CONCENTRATION POINT 40 - COMBINGING B AND C
  73          HC       2

  74          KK     R40        ROUTE 40 TO C43
  75          RS       2    ELEV       0
  76          RC   0.050   0.035   0.050    2700   .0015
  77          RX     450     458     462     482     484     562     566     570
  78          RY       5       2       1       0       0       1       2       5

  79          KK       D
  80          KM   SUB-BASIN D
  81          KM   6-HOUR RAINFALL, PATTERN NO. 1.00 WAS USED TO FIND TC & R FOR THIS BASIN
  82          KM   THIS BASIN USED RAINFALL REDUCTION FACTOR OF  .998
  83          KM     L =  .97  Kb = .027  Adj. Slope =   21.6
  84          BA    .168
  85          LG    .146    .250   3.500    .391  57.230
  86          UC    .392    .353
  87          UA       0       5      16      30      65      77      84      90      94      97
  88          UA     100

  89          KK     R43        ROUTE 43 - CARRYS SUBBASIN D TO C43
  90          RS       1    ELEV       0
  91          RC   0.020   0.016   0.020    2150  0.0037
  92          RX   439.7   439.8   439.9     440     560   560.1   560.2   560.3
  93          RY       5       2       1       0       0       1       2       5
```

```
LINE          ID.......1.......2.......3.......4.......5.......6.......7.......8.......9......10

 94           KK      E
 95           KM   SUB-BASIN E
 96           KM   6-HOUR RAINFALL, PATTERN NO. 1.00 WAS USED TO FIND TC & R FOR THIS BASIN
 97           KM   THIS BASIN USED RAINFALL REDUCTION FACTOR OF  .997
 98           KM     L =  .78  Kb = .027  Adj. Slope =   11.4
 99           BA    .197
100           LG    .132    .250   5.980    .274  64.010
101           UC    .438    .307
102           UA       0       5      16      30      65      77      84      90      94      97
103           UA     100

104           KK     C43        CONCENTRATION POINT 43
105           HC       3

106           KK     S43        STORAGE ROUTING
107           RS       1    FLOW      -1
108           SV       0    0.01      .1    .645    4.77    6.79   29.76
109           SE    1104  1104.1    1105    1106  1106.8    1107    1108
110           SQ       0      27      27      27      27      54    1815

111           KK     D43        FLOW DIVERSION AT 43RD AVE
112           DT    D43S
113           DI       0      27      27      27      27      54    1815
114           DQ       0      27      27      27      27      27      27

115           KK     R44        ROUTE 44
116           RS       1    ELEV      -1
117           RC   0.025   0.016   0.025    1300  0.0027
118           RX   469.7   469.8   469.9     470     530   530.1   530.2   530.3
119           RY       5       2       1       0       0       1       2       5

120           KK       F
121           KM   SUB-BASIN F
122           KM   6-HOUR RAINFALL, PATTERN NO. 1.00 WAS USED TO FIND TC & R FOR THIS BASIN
123           KM   THIS BASIN USED RAINFALL REDUCTION FACTOR OF  .993
124           KM     L = 1.18  Kb = .041  Adj. Slope =   20.7
125           BA    .500
126           LG    .111    .345   4.740    .234  11.550
127           UC    .654    .392
128           UA       0       5      16      30      65      77      84      90      94      97
129           UA     100

130           KK     R45        ROUTE 45
131           RS       2    ELEV       0
132           RC   0.020   0.016   0.020    2200  0.0039
133           RX    69.7    69.8    69.9      70     135   135.1   135.2   135.3
134           RY       5       2       1       0       0       1       2       5

135           KK     C45
136           HC       2
```

```
LINE          ID.......1.......2.......3.......4.......5.......6.......7.......8.......9......10

  137         KK       G
  138         KM   SUB-BASIN G
  139         KM   6-HOUR RAINFALL, PATTERN NO. 1.00 WAS USED TO FIND TC & R FOR THIS BASIN
  140         KM   THIS BASIN USED RAINFALL REDUCTION FACTOR OF  .998
  141         KM     L =  .80  Kb = .028  Adj. Slope =    3.0
  142         BA    .121
  143         LG    .150    .250   3.550    .403  55.000
  144         UC    .829    .837
  145         UA       0       5      16      30      65      77      84      90      94      97
  146         UA     100

  147         KK     R47        ROUTE 47
  148         RS       5    ELEV       0
  149         RC   0.025   0.016   0.025    7350  0.0043
  150         RX    54.7    54.8    54.9      55     145   145.1   145.2   145.3
  151         RY       5       2       1       0       0       1       2       5

  152         KK       H
  153         KM   SUB-BASIN H
  154         KM   6-HOUR RAINFALL, PATTERN NO. 1.00 WAS USED TO FIND TC & R FOR THIS BASIN
  155         KM   THIS BASIN USED RAINFALL REDUCTION FACTOR OF  .997
  156         KM     L = 1.03  Kb = .027  Adj. Slope =    8.2
  157         BA    .217
  158         LG    .233    .250   4.740    .309  37.470
  159         UC   1.567   1.496
  160         UA       0       5      16      30      65      77      84      90      94      97
  161         UA     100

  162         KK     C47
  163         HC       3

  164         KK     S47        STORAGE ROUTING AT 47TH AVE
  165         RS       1    FLOW      -1
  166         SV       0    0.01    4.04    6.31   28.74
  167         SE    1104  1104.1  1104.8    1105    1106
  168         SQ       0     105     115     182    1988

  169         KK     D47        DIVERSION AT 47TH AVE CANAL OVERFLOW SOUTH
  170         DT    D47S
  171         DI       0      58      68     135    1941
  172         DQ       0       0       0      22     825

  173         KK    D47C        FLOW DIVERSION TO CRITTENDEN STORM DRAIN
  174         DT    CRIT
  175         DI       0      58     100    2000
  176         DQ       0      58      58      58

  177         KK     R48        ROUTE 48
  178         RS       2    ELEV       0
  179         RC   0.030   0.016   0.030    2650   .0020
  180         RX    64.7    64.8    64.9      65     135   135.1   135.2   135.3
  181         RY       5       2       1       0       0       1       2       5
```

```
LINE          ID.......1.......2.......3.......4.......5.......6.......7.......8.......9......10

 182          KK       I
 183          KM   SUB-BASIN I
 184          KM   6-HOUR RAINFALL, PATTERN NO. 1.00 WAS USED TO FIND TC & R FOR THIS BASIN
 185          KM   THIS BASIN USED RAINFALL REDUCTION FACTOR OF  .994
 186          KM     L = 1.46  Kb = .025  Adj. Slope =   15.0
 187          BA    .445
 188          LG    .241    .254   3.810    .343  29.760
 189          UC    .600    .451
 190          UA       0       5      16      30      65      77      84      90      94      97
 191          UA     100

 192          KK     C49        CONCENTRATION POINT 49
 193          HC       2

 194          KK       J
 195          KM   SUB-BASIN J
 196          KM   6-HOUR RAINFALL, PATTERN NO. 1.00 WAS USED TO FIND TC & R FOR THIS BASIN
 197          KM   THIS BASIN USED RAINFALL REDUCTION FACTOR OF  .995
 198          KM     L = 1.60  Kb = .026  Adj. Slope =   12.3
 199          BA    .388
 200          LG    .200    .252   3.500    .378  44.870
 201          UC    .700    .622
 202          UA       0       5      16      30      65      77      84      90      94      97
 203          UA     100

 204          KK     C51
 205          HC       2

 206          KK     S51        STORAGE ROUTING
 207          RS       1    FLOW      -1
 208          SV       0    0.01    4.81   23.30   57.73
 209          SE    1103  1103.1    1104    1105    1106
 210          SQ       0     312     316    1216    4082

 211          KK     D51          D51S-51ST AVE STORM DRAIN DIVERSION TO THE SOUTH
 212          DT    D51S
 213          DI       0     186     500    1000    4000
 214          DQ       0     186     186     186     186

 215          KK   RCRIT
 216          DR    CRIT

 217          KK   RTN51
 218          DR    D51S

 219          KK     CSD        TOTAL STORM DRAIN DIVERSION
 220          HC       2    2.54

 221          KK     C52
 222          HC       2
```

```
LINE          ID.......1.......2.......3.......4.......5.......6.......7.......8.......9......10

 223          KK       K
 224          KM   SUB-BASIN K
 225          KM   6-HOUR RAINFALL, PATTERN NO. 1.00 WAS USED TO FIND TC & R FOR THIS BASIN
 226          KM   THIS BASIN USED RAINFALL REDUCTION FACTOR OF  .997
 227          KM     L =  .75  Kb = .035  Adj. Slope =   12.3
 228          BA    .217
 229          LG    .153    .290   4.430    .304  41.200
 230          UC    .508    .331
 231          UA       0       5      16      30      65      77      84      90      94      97
 232          UA     100

 233          KK     R55
 234          RS       2    ELEV       0
 235          RC   0.030   0.016   0.030    2600   .0028
 236          RX    49.7    49.8    49.9      50     150   150.1   150.2   150.3
 237          RY       3       2       1       0       0       1       2       3

 238          KK     S55        STORAGE ROUTING
 239          RS       1    FLOW      -1
 240          SV       0    0.01     .04     .08    5.56   12.08   20.80
 241          SE    1100  1100.1  1100.7    1101    1102  1102.5    1103
 242          SQ       0      74      77     113    1175    2476    4447

 243          KK     D55        FLOW DIVERSION
 244          DT    D55S
 245          DI       0      74      77     113    1175    2476    4447
 246          DQ       0       0       0       0       0     134     505

 247          KK       L
 248          KM   SUB-BASIN L
 249          KM   6-HOUR RAINFALL, PATTERN NO. 1.05 WAS USED TO FIND TC & R FOR THIS BASIN
 250          KM   THIS BASIN USED RAINFALL REDUCTION FACTOR OF  .993
 251          KM     L = 1.98  Kb = .024  Adj. Slope =   14.0
 252          BA    .541
 253          LG    .217    .250   5.360    .285  45.930
 254          UC    .729    .640
 255          UA       0       5      16      30      65      77      84      90      94      97
 256          UA     100

 257          KK     R59
 258          RS       2    ELEV       0
 259          RC   0.025   0.016   0.025    2600   .0021
 260          RX    89.7    89.8    89.9      90     310   310.1   310.2   310.3
 261          RY       5       2       1       0       0       1       2       5

 262          KK       M
 263          KM   SUB-BASIN M
 264          KM   6-HOUR RAINFALL, PATTERN NO. 1.00 WAS USED TO FIND TC & R FOR THIS BASIN
 265          KM   THIS BASIN USED RAINFALL REDUCTION FACTOR OF  .998
 266          KM     L =  .64  Kb = .027  Adj. Slope =   15.2
 267          BA    .172
 268          LG    .235    .150   8.050    .117  34.940
 269          UC    .342    .215
 270          UA       0       5      16      30      65      77      84      90      94      97
```

```
LINE          ID.......1.......2.......3.......4.......5.......6.......7.......8.......9......10

 271          UA     100

 272          KK       N
 273          KM   SUB-BASIN N
 274          KM   6-HOUR RAINFALL, PATTERN NO. 1.00 WAS USED TO FIND TC & R FOR THIS BASIN
 275          KM   THIS BASIN USED RAINFALL REDUCTION FACTOR OF  .995
 276          KM     L = 1.12  Kb = .025  Adj. Slope =   12.2
 277          BA    .383
 278          LG    .150    .250   4.430    .341  55.000
 279          UC    .521    .340
 280          UA       0       5      16      30      65      77      84      90      94      97
 281          UA     100

 282          KK     RCM        ROUTING N ALONG CAMELBACK ROAD
 283          RS       2    ELEV       0
 284          RC   0.025   0.016   0.025    2600  0.0025
 285          RX    44.7    44.8    44.9      45     155   155.1   155.2   155.3
 286          RY       5       2       1       0       0       1       2       5

 287          KK       O
 288          KM   SUB-BASIN O
 289          KM   6-HOUR RAINFALL, PATTERN NO. 1.16 WAS USED TO FIND TC & R FOR THIS BASIN
 290          KM   THIS BASIN USED RAINFALL REDUCTION FACTOR OF  .991
 291          KM     L = 1.29  Kb = .030  Adj. Slope =   15.7
 292          BA    .658
 293          LG    .202    .225   4.740    .329  49.420
 294          UC    .613    .335
 295          UA       0       5      16      30      65      77      84      90      94      97
 296          UA     100

 297          KK     CCM
 298          HC       2

 299          KK     RCP        ROUTING ALONG CAMPBELL
 300          RS       3    ELEV       0
 301          RC   0.025   0.016   0.025    5200  0.0026
 302          RX   159.7   159.8   159.9     160     340   340.1   340.2   340.3
 303          RY       5       2       1       0       0       1       2       5

 304          KK       P
 305          KM   SUB-BASIN P
 306          KM   6-HOUR RAINFALL, PATTERN NO. 1.00 WAS USED TO FIND TC & R FOR THIS BASIN
 307          KM   THIS BASIN USED RAINFALL REDUCTION FACTOR OF  .995
 308          KM     L = 1.37  Kb = .025  Adj. Slope =   17.9
 309          BA    .397
 310          LG    .250    .250   5.050    .288  30.000
 311          UC    .529    .398
 312          UA       0       5      16      30      65      77      84      90      94      97
 313          UA     100
```

```
LINE          ID.......1.......2.......3.......4.......5.......6.......7.......8.......9......10

 314          KK     CCP
 315          HC       2

 316          KK     DGC        FLOW DIVERTS INTO GOLF COURSE AND SOUTH IN 59TH AVE
 317          DT    DGCW
 318          DI     108     213     934    1758
 319          DQ       0       0     721    1545

 320          KK     C59        CONCENTRATION POINT 59
 321          HC       4

 322          KK     S59        STORAGE ROUTING
 323          RS       1    FLOW      -1
 324          SV       0    0.01    2.31    9.93   15.88   46.45
 325          SE    1099  1099.1    1100  1100.8    1101    1102
 326          SQ       0     220     220     267     378    2689

 327          KK     D59        FLOW DIVERSION
 328          DT    D59S
 329          DI       0     220     220     267     378    2689
 330          DQ       0     272     272     272     272    1030

 331          KK   RTNGC        FLOW INTO GOLF COURSE FROM 59TH AVE OVERTOPPING
 332          DR    DGCW

 333          KK     RGC        ROUTE THROUGH GOLF COURSE
 334          RS       6    ELEV       0
 335          RC   0.035   0.035   0.035    4600  0.0027
 336          RX    39.7    39.8    39.9      40     160   160.1   160.2   160.3
 337          RY       5       2       1       0       0       1       2       5

 338          KK       Q
 339          KM   SUB-BASIN Q
 340          KM   6-HOUR RAINFALL, PATTERN NO. 1.00 WAS USED TO FIND TC & R FOR THIS BASIN
 341          KM   THIS BASIN USED RAINFALL REDUCTION FACTOR OF  .994
 342          KM     L = 1.38  Kb = .050  Adj. Slope =   15.3
 343          BA    .475
 344          LG    .230    .250   6.290    .259  17.750
 345          UC   1.004    .733
 346          UA       0       5      16      30      65      77      84      90      94      97
 347          UA     100

 348          KK     CGC        CONCENTRATION POINT AT GOLF COURSE
 349          HC       2

 350          KK     SGC        STORAGE ROUTING IN GOLF COURSE
 351          RS       1    FLOW      -1
 352          SV       0    1.93    5.25    9.27   14.63   20.86   28.00      32
 353          SE    1100    1101    1102    1103    1104    1105    1106  1106.5
 354          SQ       0       0       0       0       0     477    2326    3000
```

```
LINE          ID.......1.......2.......3.......4.......5.......6.......7.......8.......9......10

 355          KK     R63
 356          RS       1    ELEV       0
 357          RC   0.025   0.016   0.025    1450  0.0020
 358          RX    44.7    44.8    44.9      45     155   155.1   155.2   155.3
 359          RY       5       2       1       0       0       1       2       5

 360          KK       R
 361          KM   SUB-BASIN R
 362          KM   6-HOUR RAINFALL, PATTERN NO. 1.00 WAS USED TO FIND TC & R FOR THIS BASIN
 363          KM   THIS BASIN USED RAINFALL REDUCTION FACTOR OF  .998
 364          KM     L =  .74  Kb = .027  Adj. Slope =   11.4
 365          BA    .179
 366          LG    .250    .150   7.780    .130  30.000
 367          UC    .425    .301
 368          UA       0       5      16      30      65      77      84      90      94      97
 369          UA     100

 370          KK     C63
 371          HC       3

 372          KK     S63        STORAGE ROUTING AT 63RD AVE
 373          RS       1    FLOW      -1
 374          SV       0    0.01    1.27    3.89   10.16   34.71
 375          SE      97   97.05    97.2    97.5      98      99
 376          SQ       0    1324    1678    2282    3778    8709

 377          KK     D63
 378          DT    D63E
 379          DI      52    1324    1678    2282    3778    8709
 380          DQ      52      52      52      52      52      52

 381          KK     D64        FLOW DIVERSION
 382          DT    D64S
 383          DI      52    1272    1625    2206    3300    5898
 384          DQ      52    1220    1573    2154    3248    5846

 385          KK   RTN63
 386          DR    D63E

 387          KK   RTN59
 388          DR    D59S

 389          KK     C60
 390          HC       2    3.02

 391          KK       S
 392          KM   SUB-BASIN S
 393          KM   6-HOUR RAINFALL, PATTERN NO. 1.00 WAS USED TO FIND TC & R FOR THIS BASIN
 394          KM   THIS BASIN USED RAINFALL REDUCTION FACTOR OF  .996
 395          KM     L =  .70  Kb = .026  Adj. Slope =   20.6
 396          BA    .300
 397          LG    .150    .250   4.430    .341  55.000
 398          UC    .317    .155
 399          UA       0       5      16      30      65      77      84      90      94      97
```

```
LINE          ID.......1.......2.......3.......4.......5.......6.......7.......8.......9......10

 400          UA     100

 401          KK     R57        ROUTE NEAR 57TH AVE
 402          RS       3    ELEV       0
 403          RC   0.025   0.016   0.025    5200  0.0028
 404          RX   114.7   114.8   114.9     115     285   285.1   285.2   285.3
 405          RY       5       2       1       0       0       1       2       5

 406          KK       T
 407          KM   SUB-BASIN T
 408          KM   6-HOUR RAINFALL, PATTERN NO. 1.00 WAS USED TO FIND TC & R FOR THIS BASIN
 409          KM   THIS BASIN USED RAINFALL REDUCTION FACTOR OF  .995
 410          KM     L =  .97  Kb = .025  Adj. Slope =   15.3
 411          BA    .361
 412          LG    .157    .250   4.430    .342  56.390
 413          UC    .429    .252
 414          UA       0       5      16      30      65      77      84      90      94      97
 415          UA     100

 416          KK     C58
 417          HC       2

 418          KK     RMO        ROUTE NEAR MISSOURI
 419          RS       3    ELEV       0
 420          RC   0.020   0.016   0.020    5200  0.0028
 421          RX    49.7    49.8    49.9      50     350   350.1   350.2   350.3
 422          RY       5       2       1       0       0       1       2       5

 423          KK       U
 424          KM   SUB-BASIN U
 425          KM   6-HOUR RAINFALL, PATTERN NO. 1.00 WAS USED TO FIND TC & R FOR THIS BASIN
 426          KM   THIS BASIN USED RAINFALL REDUCTION FACTOR OF  .998
 427          KM     L =  .96  Kb = .028  Adj. Slope =   15.2
 428          BA    .130
 429          LG    .198    .250   4.430    .332  51.460
 430          UC    .463    .485
 431          UA       0       5      16      30      65      77      84      90      94      97
 432          UA     100

 433          KK     RBH        ROUTE ALONG BETHANY HOME
 434          RS       1    ELEV       0
 435          RC   0.020   0.016   0.020    1330  0.0035
 436          RX    59.7    59.8    59.9      60     140   140.1   140.2   140.3
 437          RY       5       2       1       0       0       1       2       5

 438          KK       V
 439          KM   SUB-BASIN V
 440          KM   6-HOUR RAINFALL, PATTERN NO. 1.00 WAS USED TO FIND TC & R FOR THIS BASIN
 441          KM   THIS BASIN USED RAINFALL REDUCTION FACTOR OF  .998
 442          KM     L =  .71  Kb = .027  Adj. Slope =   12.9
 443          BA    .172
 444          LG    .208    .150   7.500    .152  48.050
 445          UC    .392    .272
 446          UA       0       5      16      30      65      77      84      90      94      97
 447          UA     100
```

```
LINE          ID.......1.......2.......3.......4.......5.......6.......7.......8.......9......10

 448          KK     CBH
 449          HC       2

 450          KK     R61        ROUTE NEAR 61ST AVE
 451          RS       3    ELEV       0
 452          RC   0.025   0.016   0.025    4200  0.0045
 453          RX    34.7    34.8    34.9      35     360   360.1   360.2   360.3
 454          RY       5       2       1       0       0       1       2       5

 455          KK       W
 456          KM   SUB-BASIN W
 457          KM   6-HOUR RAINFALL, PATTERN NO. 1.16 WAS USED TO FIND TC & R FOR THIS BASIN
 458          KM   THIS BASIN USED RAINFALL REDUCTION FACTOR OF  .991
 459          KM     L = 1.47  Kb = .024  Adj. Slope =   16.1
 460          BA    .656
 461          LG    .241    .150   8.280    .102  36.060
 462          UC    .546    .328
 463          UA       0       5      16      30      65      77      84      90      94      97
 464          UA     100

 465          KK     CCK
 466          HC       3

 467          KK     RCK        ROUTE NEAR CAMELBACK ROAD
 468          RS       4    ELEV       0
 469          RC   0.025   0.016   0.025    6300  0.0023
 470          RX    49.7    49.8    49.9      50     350   350.1   350.2   350.3
 471          RY       5       2       1       0       0       1       2       5

 472          KK       X
 473          KM   SUB-BASIN X
 474          KM   6-HOUR RAINFALL, PATTERN NO. 1.00 WAS USED TO FIND TC & R FOR THIS BASIN
 475          KM   THIS BASIN USED RAINFALL REDUCTION FACTOR OF  .994
 476          KM     L = 1.17  Kb = .025  Adj. Slope =   12.7
 477          BA    .469
 478          LG    .246    .150   7.780    .130  34.310
 479          UC    .521    .314
 480          UA       0       5      16      30      65      77      84      90      94      97
 481          UA     100

 482          KK     C67
 483          HC       2
 484          ZZ
```

SCHEMATIC DIAGRAM OF STREAM NETWORK

```
INPUT
 LINE      (V) ROUTING          (--->) DIVERSION OR PUMP FLOW

 NO.       (.) CONNECTOR        (<---) RETURN OF DIVERTED OR PUMPED FLOW

  32           A
               .
               .
  42           .          B
               .          .
               .          .
  53           .          .------->    D39S
  52           .        D39
               .          .
               .          .
  56           .          .          C
               .          .          V
               .          .          V
  66           .          .        R39
               .          .          .
               .          .          .
  72           .        C40............
               .          V
               .          V
  74           .        R40
               .          .
               .          .
  79           .          .          D
               .          .          V
               .          .          V
  89           .          .        R43
               .          .          .
               .          .          .
  94           .          .          .          E
               .          .          .          .
               .          .          .          .
 104           .        C43........................
               .          V
               .          V
 106           .        S43
               .          .
               .          .
 112           .          .------->    D43S
 111           .        D43
               .          V
               .          V
 115           .        R44
               .          .
               .          .
 120           .          .          F
               .          .          V
               .          .          V
 130           .          .        R45
               .          .          .
               .          .          .
 135           .        C45............
               .          .
               .          .
 137           .          .          G
               .          .          V
               .          .          V
 147           .          .        R47
               .          .          .
               .          .          .
 152           .          .          .          H
               .          .          .          .
```

```
                .          .          .
162             .        C47.........................
                .          V
                .          V
164             .        S47
                .          .
                .          .
170             .          .-------->    D47S
169             .        D47
                .          .
                .          .
174             .          .-------->    CRIT
173             .       D47C
                .          V
                .          V
177             .        R48
                .          .
                .          .
182             .          .           I
                .          .           .
                .          .           .
192             .        C49............
                .          .
                .          .
194             .          .           J
                .          .           .
                .          .           .
204             .        C51............
                .          V
                .          V
206             .        S51
                .          .
                .          .
212             .          .-------->    D51S
211             .        D51
                .          .
                .          .
216             .          .           .<-------    CRIT
215             .          .      RCRIT
                .          .           .
                .          .           .
218             .          .           .           .<-------    D51S
217             .          .           .       RTN51
                .          .           .           .
                .          .           .           .
219             .          .         CSD............
                .          .           .
                .          .           .
221             .        C52............
                .          .
                .          .
223             .          .           K
                .          .           V
                .          .           V
233             .          .         R55
                .          .           V
                .          .           V
238             .          .         S55
                .          .           .
                .          .           .
244             .          .           .-------->    D55S
243             .          .         D55
                .          .           .
                .          .           .
247             .          .           .           L
                .          .           .           V
                .          .           .           V
257             .          .           .         R59
                .          .           .           .
```

```
262                                   M
                                      .
                                      .
272                                   .        N
                                      .        V
                                      .        V
282                                   .       RCM
                                      .        .
                                      .        .
287                                   .        .          O
                                      .        .          .
                                      .        .          .
297                                   .       CCM............
                                      .        V
                                      .        V
299                                   .       RCP
                                      .        .
                                      .        .
304                                   .        .          P
                                      .        .          .
                                      .        .          .
314                                   .       CCP............
                                      .        .
                                      .        .
317                                   .        .-------->   DGCW
316                                   .       DGC
                                      .        .
                                      .        .
320                                 C59.................................
                                     V
                                     V
322                                 S59
                                     .
                                     .
328                                  .-------->   D59S
327                                 D59
                                     .
                                     .
332                                  .        .<-------   DGCW
331                                  .     RTNGC
                                     .        V
                                     .        V
333                                  .       RGC
                                     .        .
                                     .        .
338                                  .        .          Q
                                     .        .          .
                                     .        .          .
348                                  .       CGC............
                                     .        V
                                     .        V
350                                  .       SGC
                                     .        V
                                     .        V
355                                  .       R63
                                     .        .
                                     .        .
360                                  .        .          R
                                     .        .          .
                                     .        .          .
370                                 C63.......................
                                     V
                                     V
372                                 S63
                                     .
                                     .
378                                  .-------->   D63E
377                                 D63
```

```
                .         .         .
                .         .         .
382             .         .         .-------->   D64S
381             .         .      D64
                .         .         .
                .         .         .
386             .         .         .         .<-------   D63E
385             .         .         .     RTN63
                .         .         .         .
                .         .         .         .
388             .         .         .         .         .<-------   D59S
387             .         .         .         .     RTN59
                .         .         .         .         .
                .         .         .         .         .
389             .         .         .       C60............
                .         .         .         .
                .         .         .         .
391             .         .         .         .         S
                .         .         .         .         V
                .         .         .         .         V
401             .         .         .         .       R57
                .         .         .         .         .
                .         .         .         .         .
406             .         .         .         .         .         T
                .         .         .         .         .         .
                .         .         .         .         .         .
416             .         .         .         .       C58............
                .         .         .         .         V
                .         .         .         .         V
418             .         .         .         .       RMO
                .         .         .         .         .
                .         .         .         .         .
423             .         .         .         .         .         U
                .         .         .         .         .         V
                .         .         .         .         .         V
433             .         .         .         .         .       RBH
                .         .         .         .         .         .
                .         .         .         .         .         .
438             .         .         .         .         .         .         V
                .         .         .         .         .         .         .
                .         .         .         .         .         .         .
448             .         .         .         .         .       CBH............
                .         .         .         .         .         V
                .         .         .         .         .         V
450             .         .         .         .         .       R61
                .         .         .         .         .         .
                .         .         .         .         .         .
455             .         .         .         .         .         .         W
                .         .         .         .         .         .         .
                .         .         .         .         .         .         .
465             .         .         .         .       CCK........................
                .         .         .         .         V
                .         .         .         .         V
467             .         .         .         .       RCK
                .         .         .         .         .
                .         .         .         .         .
472             .         .         .         .         .         X
                .         .         .         .         .         .
                .         .         .         .         .         .
482             .         .         .         .       C67............
```

(***) RUNOFF ALSO COMPUTED AT THIS LOCATION

```
****************************************                    ****************************************
*                                      *                    *                                      *
*  FLOOD HYDROGRAPH PACKAGE  (HEC-1)   *                    *   U.S. ARMY CORPS OF ENGINEERS       *
*          SEPTEMBER 1990              *                    *   HYDROLOGIC ENGINEERING CENTER      *
*           VERSION 4.0                *                    *        609 SECOND STREET             *
*                                      *                    *      DAVIS, CALIFORNIA 95616         *
* RUN DATE  01/22/1996  TIME  11:30:39 *                    *         (916) 756-1104               *
*                                      *                    *                                      *
****************************************                    ****************************************
```

```
                    MARYVALE FLOOD MITIGATION STUDY
                    COE & VAN LOO CONSULTING, INC.
                    100-YEAR, 6-HOUR STORM
                    EXISTING CONDITIONS MODIFIED FOR DIVERSION AT 59TH AVE AND GOLF COURSE
                    FILE: H1EX100          DATE:   1/22/96
                    JOB #: 95-0024-01

 9 IO        OUTPUT CONTROL VARIABLES
                  IPRNT          5  PRINT CONTROL
                  IPLOT          0  PLOT CONTROL
                  QSCAL         0.  HYDROGRAPH PLOT SCALE

   IT        HYDROGRAPH TIME DATA
                   NMIN          5  MINUTES IN COMPUTATION INTERVAL
                  IDATE      1   0  STARTING DATE
                  ITIME       0000  STARTING TIME
                     NQ        300  NUMBER OF HYDROGRAPH ORDINATES
                 NDDATE      2   0  ENDING DATE
                 NDTIME       0055  ENDING TIME
                  ICENT         19  CENTURY MARK

            COMPUTATION INTERVAL     .08 HOURS
                 TOTAL TIME BASE   24.92 HOURS

       ENGLISH UNITS
            DRAINAGE AREA         SQUARE MILES
            PRECIPITATION DEPTH   INCHES
            LENGTH, ELEVATION     FEET
            FLOW                  CUBIC FEET PER SECOND
            STORAGE VOLUME        ACRE-FEET
            SURFACE AREA          ACRES
            TEMPERATURE           DEGREES FAHRENHEIT

11 JD       INDEX STORM NO. 1
                 STRM       3.05  PRECIPITATION DEPTH
                 TRDA        .01  TRANSPOSITION DRAINAGE AREA

12 PI        PRECIPITATION PATTERN
                .00       .00       .00       .00       .00       .00       .00       .00       .00       .00
                .00       .00       .00       .00       .00       .00       .00       .00       .00       .00
                .00       .00       .00       .00       .00       .00       .00       .00       .00       .00
                .00       .00       .00       .01       .01       .01       .01       .01       .01       .03
                .03       .03       .05       .05       .05       .15       .15       .15       .03       .03
                .03       .01       .01       .01       .01       .01       .01       .00       .00       .00
                .00       .00       .00       .00       .00       .00       .00       .00       .00       .00
                .00       .00

15 JD       INDEX STORM NO. 2
                 STRM       3.03  PRECIPITATION DEPTH
                 TRDA        .50  TRANSPOSITION DRAINAGE AREA

 0 PI        PRECIPITATION PATTERN
                .00       .00       .00       .00       .00       .00       .00       .00       .00       .00
```

.00	.00	.00	.00	.00	.00	.00	.00	.00	.00
.00	.00	.00	.00	.00	.00	.00	.00	.00	.00
.00	.00	.00	.01	.01	.01	.01	.01	.01	.03
.03	.03	.05	.05	.05	.15	.15	.15	.03	.03
.03	.01	.01	.01	.01	.01	.01	.00	.00	.00
.00	.00	.00	.00	.00	.00	.00	.00	.00	.00
.00	.00								

16 JD INDEX STORM NO. 3

STRM 2.99 PRECIPITATION DEPTH

TRDA 2.80 TRANSPOSITION DRAINAGE AREA

17 PI PRECIPITATION PATTERN

.00	.00	.00	.00	.00	.00	.00	.00	.00	.00
.00	.00	.00	.00	.00	.00	.00	.00	.00	.00
.00	.00	.00	.00	.00	.00	.00	.00	.00	.00
.00	.00	.00	.01	.01	.01	.01	.01	.01	.03
.03	.03	.07	.07	.07	.08	.08	.08	.05	.05
.05	.02	.02	.02	.01	.01	.01	.00	.00	.00
.00	.00	.00	.00	.00	.00	.00	.00	.00	.00
.00	.00								

20 JD INDEX STORM NO. 4

STRM 2.81 PRECIPITATION DEPTH

TRDA 16.00 TRANSPOSITION DRAINAGE AREA

21 PI PRECIPITATION PATTERN

.01	.01	.00	.00	.00	.00	.00	.00	.00	.01
.01	.01	.00	.01	.00	.00	.00	.00	.00	.00
.00	.00	.01	.00	.00	.00	.00	.01	.01	.01
.01	.01	.01	.01	.01	.01	.02	.02	.02	.03
.03	.03	.06	.06	.06	.07	.07	.07	.04	.04
.04	.02	.02	.02	.01	.01	.01	.01	.01	.01
.00	.00	.00	.00	.00	.00	.00	.00	.00	.00
.00	.00								

24 JD INDEX STORM NO. 5

STRM 2.47 PRECIPITATION DEPTH

TRDA 90.00 TRANSPOSITION DRAINAGE AREA

25 PI PRECIPITATION PATTERN

.01	.01	.01	.00	.00	.00	.01	.01	.01	.01
.01	.01	.01	.01	.01	.01	.01	.01	.01	.01
.01	.01	.01	.01	.01	.01	.01	.01	.01	.01
.01	.01	.01	.01	.01	.01	.02	.02	.02	.03
.03	.03	.05	.05	.05	.05	.05	.05	.04	.04
.04	.02	.02	.02	.02	.02	.02	.01	.01	.01
.01	.01	.01	.01	.01	.01	.01	.01	.01	.01
.01	.01								

28 JD INDEX STORM NO. 6

STRM 1.74 PRECIPITATION DEPTH

TRDA 500.00 TRANSPOSITION DRAINAGE AREA

29 PI PRECIPITATION PATTERN

.01	.01	.01	.01	.01	.01	.01	.01	.01	.01
.01	.01	.01	.01	.01	.01	.01	.01	.01	.01
.01	.01	.01	.01	.01	.01	.01	.01	.01	.01
.01	.01	.01	.01	.01	.01	.02	.02	.02	.03
.03	.03	.04	.04	.04	.04	.04	.04	.04	.04
.04	.03	.03	.03	.02	.02	.02	.01	.01	.01
.01	.01	.01	.01	.01	.01	.01	.01	.01	.01
.01	.01								

RUNOFF SUMMARY
FLOW IN CUBIC FEET PER SECOND
TIME IN HOURS, AREA IN SQUARE MILES

OPERATION	STATION	PEAK FLOW	TIME OF PEAK	AVERAGE FLOW FOR MAXIMUM PERIOD 6-HOUR	24-HOUR	72-HOUR	BASIN AREA	MAXIMUM STAGE	TIME OF MAX STAGE
HYDROGRAPH AT	A	198.	4.08	22.	6.	5.	.09		
HYDROGRAPH AT	B	520.	4.17	74.	19.	18.	.29		
DIVERSION TO	D39S	84.	3.75	32.	8.	8.	.29		
HYDROGRAPH AT	D39	436.	4.17	41.	10.	10.	.29		
HYDROGRAPH AT	C	396.	4.17	53.	13.	13.	.21		
ROUTED TO	R39	389.	4.17	53.	13.	13.	.21		
2 COMBINED AT	C40	822.	4.17	94.	24.	23.	.50		
ROUTED TO	R40	694.	4.33	93.	24.	23.	.50		
HYDROGRAPH AT	D	287.	4.17	42.	11.	10.	.17		
ROUTED TO	R43	262.	4.25	42.	11.	10.	.17		
HYDROGRAPH AT	E	360.	4.17	52.	13.	13.	.20		
3 COMBINED AT	C43	1124.	4.33	182.	46.	44.	.87		
ROUTED TO	S43	986.	4.50	173.	46.	44.	.87		
DIVERSION TO	D43S	27.	3.00	27.	10.	9.	.87		
HYDROGRAPH AT	D43	959.	4.50	146.	37.	35.	.87		
ROUTED TO	R44	956.	4.50	146.	37.	35.	.87		
HYDROGRAPH AT	F	650.	4.25	93.	23.	22.	.50		
ROUTED TO	R45	643.	4.33	93.	23.	22.	.50		
2 COMBINED AT	C45	1363.	4.50	227.	57.	55.	1.37		
HYDROGRAPH AT	G	111.	4.42	29.	8.	7.	.12		
ROUTED TO	R47	100.	4.92	29.	8.	7.	.12		
HYDROGRAPH AT	H	110.	4.83	45.	12.	12.	.22		
3 COMBINED AT	C47	1420.	4.50	292.	74.	72.	1.71		
ROUTED TO	S47	1312.	4.67	292.	74.	72.	1.71		
DIVERSION TO	D47S	545.	4.67	102.	26.	25.	1.71		
HYDROGRAPH AT	D47	767.	4.67	190.	49.	47.	1.71		
DIVERSION TO	CRIT	58.	3.92	45.	13.	12.	1.71		
HYDROGRAPH AT	D47C	709.	4.67	145.	36.	35.	1.71		
ROUTED TO	R48	703.	4.75	145.	36.	35.	1.71		
HYDROGRAPH AT	I	569.	4.25	92.	23.	22.	.44		

2 COMBINED AT	C49	959.	4.67	223.	57.	54.	2.15
HYDROGRAPH AT	J	421.	4.33	89.	23.	22.	.39
2 COMBINED AT	C51	1222.	4.58	301.	77.	74.	2.54
ROUTED TO	S51	1082.	4.83	301.	77.	74.	2.54
DIVERSION TO	D51S	186.	3.83	112.	29.	28.	2.54
HYDROGRAPH AT	D51	896.	4.83	190.	47.	46.	2.54
HYDROGRAPH AT	RCRIT	58.	3.92	45.	13.	12.	1.71
HYDROGRAPH AT	RTN51	186.	3.83	112.	29.	28.	2.54
2 COMBINED AT	CSD	244.	3.92	157.	42.	41.	2.54
2 COMBINED AT	C52	1035.	4.92	325.	84.	81.	5.08
HYDROGRAPH AT	K	346.	4.17	49.	12.	12.	.22
ROUTED TO	R55	331.	4.33	49.	12.	12.	.22
ROUTED TO	S55	319.	4.42	49.	12.	12.	.22
DIVERSION TO	D55S	0.	.08	0.	0.	0.	.22
HYDROGRAPH AT	D55	319.	4.42	49.	12.	12.	.22
HYDROGRAPH AT	L	571.	4.33	125.	32.	31.	.54
ROUTED TO	R59	550.	4.50	125.	32.	31.	.54
HYDROGRAPH AT	M	379.	4.08	42.	11.	10.	.17
HYDROGRAPH AT	N	622.	4.17	95.	24.	23.	.38
ROUTED TO	RCM	607.	4.33	95.	24.	23.	.38
HYDROGRAPH AT	O	988.	4.25	156.	39.	38.	.66
2 COMBINED AT	CCM	1420.	4.25	245.	62.	60.	1.04
ROUTED TO	RCP	1351.	4.42	244.	62.	60.	1.04
HYDROGRAPH AT	P	554.	4.25	83.	21.	20.	.40
2 COMBINED AT	CCP	1667.	4.42	317.	80.	77.	1.44
DIVERSION TO	DGCW	1454.	4.42	202.	51.	49.	1.44
HYDROGRAPH AT	DGC	213.	3.92	115.	30.	29.	1.44
4 COMBINED AT	C59	1041.	4.42	317.	81.	78.	2.37
ROUTED TO	S59	957.	4.67	317.	81.	78.	2.37
DIVERSION TO	D59S	462.	4.67	222.	58.	56.	2.37
HYDROGRAPH AT	D59	495.	4.67	95.	24.	23.	2.37
HYDROGRAPH AT	RTNGC	1454.	4.42	202.	51.	49.	1.44
ROUTED TO	RGC	1402.	4.58	202.	51.	49.	1.44
HYDROGRAPH AT	Q	381.	4.42	88.	22.	22.	.47
2 COMBINED AT	CGC	2100.	4.58	311.	78.	75.	.47

ROUTED TO	SGC	2052.	4.67	310.	78.	75.	.47
ROUTED TO	R63	2057.	4.67	310.	78.	75.	.47
HYDROGRAPH AT	R	328.	4.17	42.	11.	10.	.18
3 COMBINED AT	C63	2057.	4.75	398.	100.	96.	3.02
ROUTED TO	S63	2018.	4.75	395.	99.	96.	3.02
DIVERSION TO	D63E	52.	3.67	39.	10.	10.	3.02
HYDROGRAPH AT	D63	1966.	4.75	356.	89.	86.	3.02
DIVERSION TO	D64S	1914.	4.75	344.	86.	83.	3.02
HYDROGRAPH AT	D64	52.	4.67	12.	3.	3.	3.02
HYDROGRAPH AT	RTN63	52.	3.67	39.	10.	10.	3.02
HYDROGRAPH AT	RTN59	462.	4.67	222.	58.	56.	2.37
2 COMBINED AT	C60	506.	4.67	260.	68.	66.	3.02
HYDROGRAPH AT	S	736.	4.08	75.	19.	18.	.30
ROUTED TO	R57	580.	4.33	75.	19.	18.	.30
HYDROGRAPH AT	T	699.	4.17	91.	23.	22.	.36
2 COMBINED AT	C58	1120.	4.25	163.	41.	40.	.66
ROUTED TO	RMO	981.	4.50	162.	41.	40.	.66
HYDROGRAPH AT	U	177.	4.25	32.	8.	8.	.13
ROUTED TO	RBH	174.	4.25	32.	8.	8.	.13
HYDROGRAPH AT	V	339.	4.17	44.	11.	11.	.17
2 COMBINED AT	CBH	492.	4.17	75.	19.	18.	.30
ROUTED TO	R61	432.	4.42	75.	19.	18.	.30
HYDROGRAPH AT	W	1071.	4.25	161.	40.	39.	.66
3 COMBINED AT	CCK	1943.	4.42	385.	98.	94.	1.62
ROUTED TO	RCK	1834.	4.67	383.	98.	94.	1.62
HYDROGRAPH AT	X	809.	4.17	113.	28.	27.	.47
2 COMBINED AT	C67	2122.	4.58	485.	124.	119.	2.09

*** NORMAL END OF HEC-1 ***

100-YEAR, 6-HOUR HEC-1 EXISTING CONDITION MODEL

```
LINE          ID.......1.......2.......3.......4.......5.......6.......7.......8.......9......10

  1           ID        MARYVALE FLOOD MITIGATION STUDY
  2           ID        COE & VAN LOO CONSULTING, INC.
  3           ID        100-YEAR, 6-HOUR STORM
  4           ID        PROPOSED CONDITIONS - RETENTION BASIN ADDITIONS
  5           ID        FILE: H1PRP100            DATE:   1/22/96
  6           ID        JOB #: 95-0024-01
  7           ID
              *DIAGRAM
  8           IT      5                     300
  9           IO     -5       0
 10           IN     15
 11           JD   3.05    0.01
 12           PC   .000    .008    .016    .025    .033    .041    .050    .058    .066    .074
 13           PC   .087    .099    .118    .138    .216    .377    .834    .911    .931    .950
 14           PC   .962    .972    .983    .991   1.000
 15           JD   3.03    0.50
 16           JD   2.99    2.80
 17           PC   .000    .009    .016    .025    .034    .042    .051    .059    .067    .076
 18           PC   .087    .100    .120    .163    .252    .451    .694    .837    .900    .938
 19           PC   .950    .963    .975    .988   1.000
 20           JD   2.81    16.0
 21           PC   .000    .015    .020    .030    .048    .063    .076    .090    .105    .119
 22           PC   .135    .152    .175    .222    .304    .472    .670    .796    .868    .912
 23           PC   .946    .960    .973    .987   1.000
 24           JD   2.47    90.0
 25           PC   .000    .021    .035    .051    .071    .087    .105    .125    .143    .160
 26           PC   .179    .201    .232    .281    .364    .500    .658    .773    .841    .888
 27           PC   .927    .945    .964    .982   1.000
 28           JD   1.74   500.0
 29           PC   .000    .024    .043    .059    .078    .098    .119    .141    .162    .186
 30           PC   .212    .239    .271    .321    .408    .515    .627    .735    .814    .864
 31           PC   .907    .930    .954    .977   1.000

 32           KK      A
 33           KM   SUB-BASIN A
 34           KM   6-HOUR RAINFALL, PATTERN NO. 1.00 WAS USED TO FIND TC & R FOR THIS BASIN
 35           KM   THIS BASIN USED RAINFALL REDUCTION FACTOR OF  .999
 36           KM     L =  .47  Kb = .029  Adj. Slope =   14.8
 37           BA   .095
 38           LG   .150    .250   4.300    .620  55.000
 39           UC   .308    .211
 40           UA      0       5      16      30      65      77      84      90      94      97
 41           UA    100

 42           KK      B
 43           KM   SUB-BASIN B
 44           KM   6-HOUR RAINFALL, PATTERN NO. 1.00 WAS USED TO FIND TC & R FOR THIS BASIN
 45           KM   THIS BASIN USED RAINFALL REDUCTION FACTOR OF  .996
 46           KM     L = 1.03  Kb = .026  Adj. Slope =   16.5
 47           BA   .294
 48           LG   .150    .250   5.670    .279  55.000
 49           UC   .446    .311
 50           UA      0       5      16      30      65      77      84      90      94      97
 51           UA    100
```

```
LINE          ID.......1.......2.......3.......4.......5.......6.......7.......8.......9......10

  52          KK     D39        FLOW DIVERSION AT 39TH AVE
  53          DT    D39S
  54          DI       0      50     200     600
  55          DQ       0      84      84      84

  56          KK       C
  57          KM   SUB-BASIN C
  58          KM   6-HOUR RAINFALL, PATTERN NO. 1.00 WAS USED TO FIND TC & R FOR THIS BASIN
  59          KM   THIS BASIN USED RAINFALL REDUCTION FACTOR OF  .997
  60          KM     L =  .93  Kb = .027  Adj. Slope =   22.8
  61          BA    .209
  62          LG    .145    .250   3.500    .392  57.630
  63          UC    .371    .282
  64          UA       0       5      16      30      65      77      84      90      94      97
  65          UA     100

  66          KK     R39
  67          KM        ROUTING SUBBASIN C ALONG 39TH AVE. TO CP 40
  68          RS       1    ELEV       0
  69          RC   0.025   0.016   0.025    1600  0.0042
  70          RX    69.7    69.8    69.9      70     130   130.1   130.2   130.3
  71          RY       5       2       1       0       0       1       2       5

  72          KK     C40        CONCENTRATION POINT 40 - COMBINGING B AND C
  73          HC       2

  74          KK     R40        ROUTE 40 TO C43
  75          RS       2    ELEV       0
  76          RC   0.050   0.035   0.050    2700   .0015
  77          RX     450     458     462     482     484     562     566     570
  78          RY       5       2       1       0       0       1       2       5

  79          KK       D
  80          KM   SUB-BASIN D
  81          KM   6-HOUR RAINFALL, PATTERN NO. 1.00 WAS USED TO FIND TC & R FOR THIS BASIN
  82          KM   THIS BASIN USED RAINFALL REDUCTION FACTOR OF  .998
  83          KM     L =  .97  Kb = .027  Adj. Slope =   21.6
  84          BA    .168
  85          LG    .146    .250   3.500    .391  57.230
  86          UC    .392    .353
  87          UA       0       5      16      30      65      77      84      90      94      97
  88          UA     100

  89          KK     R43        ROUTE 43 - CARRYS SUBBASIN D TO C43
  90          RS       1    ELEV       0
  91          RC   0.020   0.016   0.020    2150  0.0037
  92          RX   439.7   439.8   439.9     440     560   560.1   560.2   560.3
  93          RY       5       2       1       0       0       1       2       5
```

```
LINE          ID.......1.......2.......3.......4.......5.......6.......7.......8.......9......10

 94           KK       E
 95           KM   SUB-BASIN E
 96           KM   6-HOUR RAINFALL, PATTERN NO. 1.00 WAS USED TO FIND TC & R FOR THIS BASIN
 97           KM   THIS BASIN USED RAINFALL REDUCTION FACTOR OF  .997
 98           KM     L =  .78  Kb = .027  Adj. Slope =   11.4
 99           BA    .197
100           LG    .132    .250   5.980    .274  64.010
101           UC    .438    .307
102           UA       0       5      16      30      65      77      84      90      94      97
103           UA     100

104           KK     C43        CONCENTRATION POINT 43
105           HC       3

106           KK     S43        STORAGE ROUTING
107           RS       1    FLOW      -1
108           SV       0    0.01      .1    .645    4.77    6.79   29.76
109           SE    1104  1104.1    1105    1106  1106.8    1107    1108
110           SQ       0      27      27      27      27      54    1815

111           KK     D43        FLOW DIVERSION AT 43RD AVE
112           DT    D43S
113           DI       0      27      27      27      27      54    1815
114           DQ       0      27      27      27      27      27      27

115           KK     R44        ROUTE 44
116           RS       1    ELEV      -1
117           RC   0.025   0.016   0.025    1300  0.0027
118           RX   469.7   469.8   469.9     470     530   530.1   530.2   530.3
119           RY       5       2       1       0       0       1       2       5

120           KK       F
121           KM   SUB-BASIN F
122           KM   6-HOUR RAINFALL, PATTERN NO. 1.00 WAS USED TO FIND TC & R FOR THIS BASIN
123           KM   THIS BASIN USED RAINFALL REDUCTION FACTOR OF  .993
124           KM     L = 1.18  Kb = .041  Adj. Slope =   20.7
125           BA    .500
126           LG    .111    .345   4.740    .234  11.550
127           UC    .654    .392
128           UA       0       5      16      30      65      77      84      90      94      97
129           UA     100

130           KK     R45        ROUTE 45
131           RS       2    ELEV       0
132           RC   0.020   0.016   0.020    2200  0.0039
133           RX    69.7    69.8    69.9      70     135   135.1   135.2   135.3
134           RY       5       2       1       0       0       1       2       5

135           KK     C45
136           HC       2
```

```
LINE          ID.......1.......2.......3.......4.......5.......6.......7.......8.......9......10

 137          KK       G
 138          KM   SUB-BASIN G
 139          KM   6-HOUR RAINFALL, PATTERN NO. 1.00 WAS USED TO FIND TC & R FOR THIS BASIN
 140          KM   THIS BASIN USED RAINFALL REDUCTION FACTOR OF  .998
 141          KM     L =  .80  Kb = .028  Adj. Slope =    3.0
 142          BA    .121
 143          LG    .150    .250   3.550    .403  55.000
 144          UC    .829    .837
 145          UA       0       5      16      30      65      77      84      90      94      97
 146          UA     100

 147          KK     R47        ROUTE 47
 148          RS       5    ELEV       0
 149          RC   0.025   0.016   0.025    7350  0.0043
 150          RX    54.7    54.8    54.9      55     145   145.1   145.2   145.3
 151          RY       5       2       1       0       0       1       2       5

 152          KK       H
 153          KM   SUB-BASIN H
 154          KM   6-HOUR RAINFALL, PATTERN NO. 1.00 WAS USED TO FIND TC & R FOR THIS BASIN
 155          KM   THIS BASIN USED RAINFALL REDUCTION FACTOR OF  .997
 156          KM     L = 1.03  Kb = .027  Adj. Slope =    8.2
 157          BA    .217
 158          LG    .233    .250   4.740    .309  37.470
 159          UC   1.567   1.496
 160          UA       0       5      16      30      65      77      84      90      94      97
 161          UA     100

 162          KK     C47
 163          HC       3

 164          KK     S47        STORAGE ROUTING AT 47TH AVE
 165          RS       1    FLOW      -1
 166          SV       0    0.01    4.04    6.31   28.74
 167          SE    1104  1104.1  1104.8    1105    1106
 168          SQ       0     105     115     182    1988

 169          KK     D47        DIVERSION AT 47TH AVE CANAL OVERFLOW SOUTH
 170          DT    D47S
 171          DI       0     155     165     210    2038
 172          DQ       0       0       0      22     825

 173          KK    D47C        FLOW DIVERSION THROUGH CRITTENDEN STORM DRAIN
 174          DT    CRIT
 175          DI       0     155     200    2000
 176          DQ       0     155     155     155

 177          KK     R48        ROUTE 48
 178          RS       2    ELEV       0
 179          RC   0.030   0.016   0.030    2650   .0020
 180          RX    64.7    64.8    64.9      65     135   135.1   135.2   135.3
 181          RY       5       2       1       0       0       1       2       5
```

```
LINE          ID.......1.......2.......3.......4.......5.......6.......7.......8.......9......10

 182          KK       I
 183          KM   SUB-BASIN I
 184          KM   6-HOUR RAINFALL, PATTERN NO. 1.00 WAS USED TO FIND TC & R FOR THIS BASIN
 185          KM   THIS BASIN USED RAINFALL REDUCTION FACTOR OF  .994
 186          KM     L = 1.46  Kb = .025  Adj. Slope =   15.0
 187          BA    .445
 188          LG    .241    .254   3.810    .343  29.760
 189          UC    .600    .451
 190          UA       0       5      16      30      65      77      84      90      94      97
 191          UA     100

 192          KK     C49        CONCENTRATION POINT 49
 193          HC       2

 194          KK       J
 195          KM   SUB-BASIN J
 196          KM   6-HOUR RAINFALL, PATTERN NO. 1.00 WAS USED TO FIND TC & R FOR THIS BASIN
 197          KM   THIS BASIN USED RAINFALL REDUCTION FACTOR OF  .995
 198          KM     L = 1.60  Kb = .026  Adj. Slope =   12.3
 199          BA    .388
 200          LG    .200    .252   3.500    .378  44.870
 201          UC    .700    .622
 202          UA       0       5      16      30      65      77      84      90      94      97
 203          UA     100

 204          KK     C51
 205          HC       2

 206          KK     D51        STORM DRAIN DIVERSION TO SOUTH
 207          DT    D51S
 208          DI       0      20     500    1000    4000
 209          DQ       0      20      20      20      20

 210          KK       K
 211          KM   SUB-BASIN K
 212          KM   6-HOUR RAINFALL, PATTERN NO. 1.00 WAS USED TO FIND TC & R FOR THIS BASIN
 213          KM   THIS BASIN USED RAINFALL REDUCTION FACTOR OF  .997
 214          KM     L =  .75  Kb = .035  Adj. Slope =   12.3
 215          BA    .217
 216          LG    .153    .290   4.430    .304  41.200
 217          UC    .508    .331
 218          UA       0       5      16      30      65      77      84      90      94      97
 219          UA     100

 220          KK      L'
 221          KM   SUB-BASIN L'
 222          KM   6-HOUR RAINFALL, PATTERN NO. 1.05 WAS USED TO FIND TC & R FOR THIS BASIN
 223          KM   THIS BASIN USED RAINFALL REDUCTION FACTOR OF  .993
 224          KM     L = 1.98  Kb = .024  Adj. Slope =   14.0
 225          BA    .228
 226          LG    .217    .250   5.360    .285  45.930
 227          UC    .729    .640
 228          UA       0       5      16      30      65      77      84      90      94      97
 229          UA     100
```

```
LINE          ID.......1.......2.......3.......4.......5.......6.......7.......8.......9......10

 230          KK     RL'
 231          RS       1    ELEV       0
 232          RC   0.030   0.016   0.030    1800   .0028
 233          RX    49.7    49.8    49.9      50     150   150.1   150.2   150.3
 234          RY       3       2       1       0       0       1       2       3

 235          KK      M'
 236          KM   SUB-BASIN M'
 237          KM   6-HOUR RAINFALL, PATTERN NO. 1.00 WAS USED TO FIND TC & R FOR THIS BASIN
 238          KM   THIS BASIN USED RAINFALL REDUCTION FACTOR OF  .998
 239          KM     L =  .64  Kb = .027  Adj. Slope =   15.2
 240          BA    .09
 241          LG   .235    .150   8.050    .117  34.940
 242          UC   .342    .215
 243          UA       0       5      16      30      65      77      84      90      94      97
 244          UA     100

 245          KK     RM'
 246          RS       1    ELEV       0
 247          RC   0.030   0.016   0.030    1200   .0028
 248          RX    49.7    49.8    49.9      50     150   150.1   150.2   150.3
 249          RY       3       2       1       0       0       1       2       3

 250          KK   CCHAN        COMBINATION OF FLOW IN CHANNEL ALONG CANAL
 251          HC       2

 252          KK      CB
 253          HC       3

 254          KK      SB        STORAGE ROUTING
 255          RS       1    FLOW      -1
 256          SV       0      33      67     100     133     167     190     200
 257          SE    1086    1089    1092    1095    1098    1101    1103    1104
 258          SQ       0      27      92      95      98     101     103    1175

 259          KK   RTN47
 260          DR    CRIT

 261          KK   RTN51
 262          DR    D51S

 263          KK    CSD1        51ST AVE. & CRITTENDEN LANE STORM DRAIN DIVERSION
 264          HC       2    2.54

 265          KK    CSD2        TOTAL STORM DRAIN DIVERSION INCL. BASIN OUTLET
 266          HC       2

 267          KK       L
 268          KM   SUB-BASIN L
 269          KM   6-HOUR RAINFALL, PATTERN NO. 1.05 WAS USED TO FIND TC & R FOR THIS BASIN
 270          KM   THIS BASIN USED RAINFALL REDUCTION FACTOR OF  .993
 271          KM     L = 1.98  Kb = .024  Adj. Slope =   14.0
 272          BA    .313
 273          LG   .217    .250   5.360    .285  45.930
```

```
LINE          ID.......1.......2.......3.......4.......5.......6.......7.......8.......9......10

 274          UC    .729    .640
 275          UA       0       5      16      30      65      77      84      90      94      97
 276          UA     100

 277          KK     R59
 278          RS       2    ELEV       0
 279          RC   0.025   0.016   0.025    2600   .0021
 280          RX    89.7    89.8    89.9      90     310   310.1   310.2   310.3
 281          RY       5       2       1       0       0       1       2       5

 282          KK       M
 283          KM   SUB-BASIN M
 284          KM   6-HOUR RAINFALL, PATTERN NO. 1.00 WAS USED TO FIND TC & R FOR THIS BASIN
 285          KM   THIS BASIN USED RAINFALL REDUCTION FACTOR OF  .998
 286          KM     L =  .64  Kb = .027  Adj. Slope =   15.2
 287          BA   .0820
 288          LG    .235    .150   8.050    .117  34.940
 289          UC    .342    .215
 290          UA       0       5      16      30      65      77      84      90      94      97
 291          UA     100

 292          KK       N
 293          KM   SUB-BASIN N
 294          KM   6-HOUR RAINFALL, PATTERN NO. 1.00 WAS USED TO FIND TC & R FOR THIS BASIN
 295          KM   THIS BASIN USED RAINFALL REDUCTION FACTOR OF  .995
 296          KM     L = 1.12  Kb = .025  Adj. Slope =   12.2
 297          BA    .383
 298          LG    .150    .250   4.430    .341  55.000
 299          UC    .521    .340
 300          UA       0       5      16      30      65      77      84      90      94      97
 301          UA     100

 302          KK     RCM        ROUTING N ALONG CAMELBACK ROAD
 303          RS       2    ELEV       0
 304          RC   0.025   0.016   0.025    2600  0.0025
 305          RX    44.7    44.8    44.9      45     155   155.1   155.2   155.3
 306          RY       5       2       1       0       0       1       2       5

 307          KK       O
 308          KM   SUB-BASIN O
 309          KM   6-HOUR RAINFALL, PATTERN NO. 1.16 WAS USED TO FIND TC & R FOR THIS BASIN
 310          KM   THIS BASIN USED RAINFALL REDUCTION FACTOR OF  .991
 311          KM     L = 1.29  Kb = .030  Adj. Slope =   15.7
 312          BA    .658
 313          LG    .202    .225   4.740    .329  49.420
 314          UC    .613    .335
 315          UA       0       5      16      30      65      77      84      90      94      97
 316          UA     100

 317          KK     CCM
 318          HC       2
```

```
LINE          ID.......1.......2.......3.......4.......5.......6.......7.......8.......9......10

 319          KK     RCP        ROUTING ALONG CAMPBELL
 320          RS       3    ELEV       0
 321          RC   0.025   0.016   0.025    5200  0.0026
 322          RX   159.7   159.8   159.9     160     340   340.1   340.2   340.3
 323          RY       5       2       1       0       0       1       2       5

 324          KK       P
 325          KM   SUB-BASIN P
 326          KM   6-HOUR RAINFALL, PATTERN NO. 1.00 WAS USED TO FIND TC & R FOR THIS BASIN
 327          KM   THIS BASIN USED RAINFALL REDUCTION FACTOR OF  .995
 328          KM     L = 1.37  Kb = .025  Adj. Slope =   17.9
 329          BA    .397
 330          LG    .250    .250   5.050    .288  30.000
 331          UC    .529    .398
 332          UA       0       5      16      30      65      77      84      90      94      97
 333          UA     100

 334          KK     CCP
 335          HC       2

 336          KK     DGC        FLOW DIVERTS INTO GOLF COURSE AND SOUTH IN 59TH AVE
 337          DT    DGCW
 338          DI     108     213     934    1758
 339          DQ       0       0     721    1545

 340          KK     R58
 341          RS       1    ELEV       0
 342          RC   0.025   0.016   0.025    1500   .0021
 343          RX    89.7    89.8    89.9      90     310   310.1   310.2   310.3
 344          RY       5       2       1       0       0       1       2       5

 345          KK     C59        CONCENTRATION POINT 59
 346          HC       3

 347          KK     S59        STORAGE ROUTING
 348          RS       1    FLOW      -1
 349          SV       0    0.01    2.31    9.93   15.88   46.45
 350          SE    1099  1099.1    1100  1100.8    1101    1102
 351          SQ       0     220     220     267     378    2689

 352          KK    D59W        FLOW DIVERSION STORM DRAIN SOUTH AND SHEET FLOW WEST
 353          DT    D59S
 354          DI       0     220     220     267     378    2689
 355          DQ       0     272     272     272     272    1030

 356          KK   RTNGC        FLOW INTO GOLF COURSE FROM 59TH AVE OVERTOPPING
 357          DR    DGCW

 358          KK     RGC        ROUTE THROUGH GOLF COURSE
 359          RS       6    ELEV       0
 360          RC   0.035   0.035   0.035    4600  0.0027
 361          RX    39.7    39.8    39.9      40     160   160.1   160.2   160.3
 362          RY       5       2       1       0       0       1       2       5
```

```
LINE          ID.......1.......2.......3.......4.......5.......6.......7.......8.......9......10

 363          KK       Q
 364          KM   SUB-BASIN Q
 365          KM   6-HOUR RAINFALL, PATTERN NO. 1.00 WAS USED TO FIND TC & R FOR THIS BASIN
 366          KM   THIS BASIN USED RAINFALL REDUCTION FACTOR OF  .994
 367          KM     L = 1.38  Kb = .050  Adj. Slope =   15.3
 368          BA    .475
 369          LG    .230    .250   6.290    .259  17.750
 370          UC   1.004    .733
 371          UA       0       5      16      30      65      77      84      90      94      97
 372          UA     100

 373          KK     CGC        CONCENTRATION POINT AT GOLF COURSE
 374          HC       2

 375          KK     SGC        STORAGE ROUTING IN GOLF COURSE
 376          RS       1    FLOW      -1
 377          SV       0    1.93    5.25    9.27   14.63   20.86   28.00      32
 378          SE    1100    1101    1102    1103    1104    1105    1106  1106.5
 379          SQ       0       0       0       0       0     477    2326    3000

 380          KK     R63
 381          RS       1    ELEV       0
 382          RC   0.025   0.016   0.025    1450  0.0020
 383          RX    44.7    44.8    44.9      45     155   155.1   155.2   155.3
 384          RY       5       2       1       0       0       1       2       5

 385          KK       R
 386          KM   SUB-BASIN R
 387          KM   6-HOUR RAINFALL, PATTERN NO. 1.00 WAS USED TO FIND TC & R FOR THIS BASIN
 388          KM   THIS BASIN USED RAINFALL REDUCTION FACTOR OF  .998
 389          KM     L =  .74  Kb = .027  Adj. Slope =   11.4
 390          BA    .179
 391          LG    .250    .150   7.780    .130  30.000
 392          UC    .425    .301
 393          UA       0       5      16      30      65      77      84      90      94      97
 394          UA     100

 395          KK     C63
 396          HC       3

 397          KK      SA        STORAGE ROUTING IN DETENTION BASIN A
 398          RS       1    FLOW      -1
 399          SV       0    22.3    31.2    50.6    50.6      51      51
 400          SE    1087    1092    1094    1097    1098    1099    1100
 401          SQ       0      52      54      57     190    1135    4582

 402          KK     DSA        FLOW DIVERSION FROM DET. BASIN A THROUGH 30" PIPE WEST
 403          DT    DSAW
 404          DI      35    1324    1678    2282    3778    8709
 405          DQ      20      20      20      20      20      20
```

```
LINE          ID.......1.......2.......3.......4.......5.......6.......7.......8.......9......10

 406          KK    DWRA        FLOW DIVERSION THROUGH 36" PIPE EAST FROM DET. BASIN A
 407          KM                AND REMAINING FLOW WEIRING OVER CANAL
 408          DT    DSAE
 409          DI      35    1324    1678    2282    3778    8709
 410          DQ      35      35      35      35      35      35

 411          KK  RTNSAE
 412          DR    DSAE

 413          KK   RTN59
 414          DR    D59S

 415          KK     C60
 416          HC       2    3.02

 417          KK       S
 418          KM   SUB-BASIN S
 419          KM   6-HOUR RAINFALL, PATTERN NO. 1.00 WAS USED TO FIND TC & R FOR THIS BASIN
 420          KM   THIS BASIN USED RAINFALL REDUCTION FACTOR OF  .996
 421          KM     L =  .70  Kb = .026  Adj. Slope =   20.6
 422          BA    .300
 423          LG    .150    .250   4.430    .341  55.000
 424          UC    .317    .155
 425          UA       0       5      16      30      65      77      84      90      94      97
 426          UA     100

 427          KK     R57        ROUTE NEAR 57TH AVE
 428          RS       3    ELEV       0
 429          RC   0.025   0.016   0.025    5200  0.0028
 430          RX   114.7   114.8   114.9     115     285   285.1   285.2   285.3
 431          RY       5       2       1       0       0       1       2       5

 432          KK       T
 433          KM   SUB-BASIN T
 434          KM   6-HOUR RAINFALL, PATTERN NO. 1.00 WAS USED TO FIND TC & R FOR THIS BASIN
 435          KM   THIS BASIN USED RAINFALL REDUCTION FACTOR OF  .995
 436          KM     L =  .97  Kb = .025  Adj. Slope =   15.3
 437          BA    .361
 438          LG    .157    .250   4.430    .342  56.390
 439          UC    .429    .252
 440          UA       0       5      16      30      65      77      84      90      94      97
 441          UA     100

 442          KK     C58
 443          HC       2

 444          KK     RMO        ROUTE NEAR MISSOURI
 445          RS       3    ELEV       0
 446          RC   0.020   0.016   0.020    5200  0.0028
 447          RX    49.7    49.8    49.9      50     350   350.1   350.2   350.3
 448          RY       5       2       1       0       0       1       2       5
```

```
LINE          ID.......1.......2.......3.......4.......5.......6.......7.......8.......9......10

 449          KK      U
 450          KM   SUB-BASIN U
 451          KM   6-HOUR RAINFALL, PATTERN NO. 1.00 WAS USED TO FIND TC & R FOR THIS BASIN
 452          KM   THIS BASIN USED RAINFALL REDUCTION FACTOR OF  .998
 453          KM     L =  .96  Kb = .028  Adj. Slope =   15.2
 454          BA    .130
 455          LG    .198    .250   4.430    .332  51.460
 456          UC    .463    .485
 457          UA       0       5      16      30      65      77      84      90      94      97
 458          UA     100

 459          KK     RBH        ROUTE ALONG BETHANY HOME
 460          RS       1    ELEV       0
 461          RC   0.020   0.016   0.020    1330  0.0035
 462          RX    59.7    59.8    59.9      60     140   140.1   140.2   140.3
 463          RY       5       2       1       0       0       1       2       5

 464          KK       V
 465          KM   SUB-BASIN V
 466          KM   6-HOUR RAINFALL, PATTERN NO. 1.00 WAS USED TO FIND TC & R FOR THIS BASIN
 467          KM   THIS BASIN USED RAINFALL REDUCTION FACTOR OF  .998
 468          KM     L =  .71  Kb = .027  Adj. Slope =   12.9
 469          BA    .172
 470          LG    .208    .150   7.500    .152  48.050
 471          UC    .392    .272
 472          UA       0       5      16      30      65      77      84      90      94      97
 473          UA     100

 474          KK     CBH
 475          HC       2

 476          KK     R61        ROUTE NEAR 61ST AVE
 477          RS       3    ELEV       0
 478          RC   0.025   0.016   0.025    4200  0.0045
 479          RX    34.7    34.8    34.9      35     360   360.1   360.2   360.3
 480          RY       5       2       1       0       0       1       2       5

 481          KK       W
 482          KM   SUB-BASIN W
 483          KM   6-HOUR RAINFALL, PATTERN NO. 1.16 WAS USED TO FIND TC & R FOR THIS BASIN
 484          KM   THIS BASIN USED RAINFALL REDUCTION FACTOR OF  .991
 485          KM     L = 1.47  Kb = .024  Adj. Slope =   16.1
 486          BA    .656
 487          LG    .241    .150   8.280    .102  36.060
 488          UC    .546    .328
 489          UA       0       5      16      30      65      77      84      90      94      97
 490          UA     100

 491          KK     CCK
 492          HC       3
```

```
LINE          ID.......1.......2.......3.......4.......5.......6.......7.......8.......9......10

 493          KK     RCK        ROUTE NEAR CAMELBACK ROAD
 494          RS       4    ELEV       0
 495          RC   0.025   0.016   0.025    6300  0.0023
 496          RX    49.7    49.8    49.9      50     350   350.1   350.2   350.3
 497          RY       5       2       1       0       0       1       2       5

 498          KK       X
 499          KM   SUB-BASIN X
 500          KM   6-HOUR RAINFALL, PATTERN NO. 1.00 WAS USED TO FIND TC & R FOR THIS BASIN
 501          KM   THIS BASIN USED RAINFALL REDUCTION FACTOR OF  .994
 502          KM     L = 1.17  Kb = .025  Adj. Slope =   12.7
 503          BA    .469
 504          LG    .246    .150   7.780    .130  34.310
 505          UC    .521    .314
 506          UA       0       5      16      30      65      77      84      90      94      97
 507          UA     100

 508          KK     C67
 509          HC       2
 510          ZZ
```

SCHEMATIC DIAGRAM OF STREAM NETWORK

```
INPUT
 LINE      (V) ROUTING          (--->) DIVERSION OR PUMP FLOW

 NO.       (.) CONNECTOR        (<---) RETURN OF DIVERTED OR PUMPED FLOW

  32           A
               .
               .
  42           .           B
               .           .
               .           .
  53           .           .------->    D39S
  52           .         D39
               .           .
               .           .
  56           .           .           C
               .           .           V
               .           .           V
  66           .           .         R39
               .           .           .
               .           .           .
  72           .         C40............
               .           V
               .           V
  74           .         R40
               .           .
               .           .
  79           .           .           D
               .           .           V
               .           .           V
  89           .           .         R43
               .           .           .
               .           .           .
  94           .           .           .           E
               .           .           .           .
               .           .           .           .
 104           .         C43.......................
               .           V
               .           V
 106           .         S43
               .           .
               .           .
 112           .           .------->    D43S
 111           .         D43
               .           V
               .           V
 115           .         R44
               .           .
               .           .
 120           .           .           F
               .           .           V
               .           .           V
 130           .           .         R45
               .           .           .
               .           .           .
 135           .         C45............
               .           .
               .           .
 137           .           .           G
               .           .           V
               .           .           V
 147           .           .         R47
               .           .           .
               .           .           .
 152           .           .           .           H
               .           .           .           .
```

```
                .          .          .
162             .        C47.........................
                .          V
                .          V
164             .        S47
                .          .
                .          .
170             .          .-------->    D47S
169             .        D47
                .          .
                .          .
174             .          .-------->    CRIT
173             .       D47C
                .          V
                .          V
177             .        R48
                .          .
                .          .
182             .          .          I
                .          .          .
                .          .          .
192             .        C49............
                .          .
                .          .
194             .          .          J
                .          .          .
                .          .          .
204             .        C51............
                .          .
                .          .
207             .          .-------->    D51S
206             .        D51
                .          .
                .          .
210             .          .          K
                .          .          .
                .          .          .
220             .          .          .         L'
                .          .          .          V
                .          .          .          V
230             .          .          .        RL'
                .          .          .          .
                .          .          .          .
235             .          .          .          .         M'
                .          .          .          .          V
                .          .          .          .          V
245             .          .          .          .        RM'
                .          .          .          .          .
                .          .          .          .          .
250             .          .          .      CCHAN............
                .          .          .          .
                .          .          .          .
252             .         CB.........................
                .          V
                .          V
254             .         SB
                .          .
                .          .
260             .          .          .<-------    CRIT
259             .          .      RTN47
                .          .          .
                .          .          .
262             .          .          .          .<-------    D51S
261             .          .          .      RTN51
                .          .          .          .
                .          .          .          .
263             .          .       CSD1............
                .          .          .
                .          .          .
```

```
265          .        CSD2............
             .          .
             .          .
267          .          .          L
             .          .          V
             .          .          V
277          .          .        R59
             .          .          .
             .          .          .
282          .          .          .          M
             .          .          .          .
             .          .          .          .
292          .          .          .          .          N
             .          .          .          .          V
             .          .          .          .          V
302          .          .          .          .        RCM
             .          .          .          .          .
             .          .          .          .          .
307          .          .          .          .          .          O
             .          .          .          .          .          .
             .          .          .          .          .          .
317          .          .          .          .        CCM............
             .          .          .          .          V
             .          .          .          .          V
319          .          .          .          .        RCP
             .          .          .          .          .
             .          .          .          .          .
324          .          .          .          .          .          P
             .          .          .          .          .          .
             .          .          .          .          .          .
334          .          .          .          .        CCP............
             .          .          .          .          .
             .          .          .          .          .
337          .          .          .          .          .-------->   DGCW
336          .          .          .          .        DGC
             .          .          .          .          V
             .          .          .          .          V
340          .          .          .          .        R58
             .          .          .          .          .
             .          .          .          .          .
345          .          .        C59........................
             .          .          V
             .          .          V
347          .          .        S59
             .          .          .
             .          .          .
353          .          .          .-------->   D59S
352          .          .        D59W
             .          .          .
             .          .          .
357          .          .          .          .<-------   DGCW
356          .          .          .       RTNGC
             .          .          .          V
             .          .          .          V
358          .          .          .        RGC
             .          .          .          .
             .          .          .          .
363          .          .          .          .          Q
             .          .          .          .          .
             .          .          .          .          .
373          .          .          .        CGC............
             .          .          .          V
             .          .          .          V
375          .          .          .        SGC
             .          .          .          V
             .          .          .          V
380          .          .          .        R63
             .          .          .          .
             .          .          .          .
```

```
385   .     .     .     .     R
      .     .     .     .     .
      .     .     .     .     .
395   .     .   C63.....................
      .     .     V
      .     .     V
397   .     .    SA
      .     .     .
      .     .     .
403   .     .     .------->   DSAW
402   .     .   DSA
      .     .     .
      .     .     .
408   .     .     .------->   DSAE
406   .     .  DWRA
      .     .     .
      .     .     .
412   .     .     .     .<-------    DSAE
411   .     .     .  RTNSAE
      .     .     .     .
      .     .     .     .
414   .     .     .     .     .<-------    D59S
413   .     .     .     .  RTN59
      .     .     .     .     .
      .     .     .     .     .
415   .     .     .   C60............
      .     .     .     .
      .     .     .     .
417   .     .     .     .     S
      .     .     .     .     V
      .     .     .     .     V
427   .     .     .     .   R57
      .     .     .     .     .
      .     .     .     .     .
432   .     .     .     .     .          T
      .     .     .     .     .          .
      .     .     .     .     .          .
442   .     .     .     .   C58............
      .     .     .     .     V
      .     .     .     .     V
444   .     .     .     .   RMO
      .     .     .     .     .
      .     .     .     .     .
449   .     .     .     .     .          U
      .     .     .     .     .          V
      .     .     .     .     .          V
459   .     .     .     .     .        RBH
      .     .     .     .     .          .
      .     .     .     .     .          .
464   .     .     .     .     .          .          V
      .     .     .     .     .          .          .
      .     .     .     .     .          .          .
474   .     .     .     .     .        CBH............
      .     .     .     .     .          V
      .     .     .     .     .          V
476   .     .     .     .     .        R61
      .     .     .     .     .          .
      .     .     .     .     .          .
481   .     .     .     .     .          .          W
      .     .     .     .     .          .          .
      .     .     .     .     .          .          .
491   .     .     .     .   CCK.......................
      .     .     .     .     V
      .     .     .     .     V
493   .     .     .     .   RCK
      .     .     .     .     .
      .     .     .     .     .
498   .     .     .     .     .          X
      .     .     .     .     .          .
```

```
                 :         :         :         :         :         :
508              :         :         :         :         C67.......:
```

(***) RUNOFF ALSO COMPUTED AT THIS LOCATION

```
*****************************************
*                                       *
*   FLOOD HYDROGRAPH PACKAGE  (HEC-1)   *
*            SEPTEMBER 1990             *
*             VERSION 4.0               *
*                                       *
* RUN DATE  01/22/1996  TIME  13:39:27  *
*                                       *
*****************************************
```

```
*****************************************
*                                       *
*    U.S. ARMY CORPS OF ENGINEERS       *
*    HYDROLOGIC ENGINEERING CENTER      *
*          609 SECOND STREET            *
*       DAVIS, CALIFORNIA 95616         *
*           (916) 756-1104              *
*                                       *
*****************************************
```

```
                    MARYVALE FLOOD MITIGATION STUDY
                    COE & VAN LOO CONSULTING, INC.
                    100-YEAR, 6-HOUR STORM
                    PROPOSED CONDITIONS - RETENTION BASIN ADDITIONS
                    FILE: H1PRP100          DATE:   1/22/96
                    JOB #: 95-0024-01

 9 IO        OUTPUT CONTROL VARIABLES
                  IPRNT          5  PRINT CONTROL
                  IPLOT          0  PLOT CONTROL
                  QSCAL         0.  HYDROGRAPH PLOT SCALE

   IT        HYDROGRAPH TIME DATA
                   NMIN          5  MINUTES IN COMPUTATION INTERVAL
                  IDATE      1   0  STARTING DATE
                  ITIME       0000  STARTING TIME
                     NQ        300  NUMBER OF HYDROGRAPH ORDINATES
                 NDDATE      2   0  ENDING DATE
                 NDTIME       0055  ENDING TIME
                  ICENT         19  CENTURY MARK

             COMPUTATION INTERVAL     .08 HOURS
                  TOTAL TIME BASE   24.92 HOURS

        ENGLISH UNITS
             DRAINAGE AREA         SQUARE MILES
             PRECIPITATION DEPTH   INCHES
             LENGTH, ELEVATION     FEET
             FLOW                  CUBIC FEET PER SECOND
             STORAGE VOLUME        ACRE-FEET
             SURFACE AREA          ACRES
             TEMPERATURE           DEGREES FAHRENHEIT

11 JD        INDEX STORM NO. 1
                  STRM       3.05  PRECIPITATION DEPTH
                  TRDA        .01  TRANSPOSITION DRAINAGE AREA

12 PI          PRECIPITATION PATTERN
                 .00       .00       .00       .00       .00       .00       .00       .00       .00       .00
                 .00       .00       .00       .00       .00       .00       .00       .00       .00       .00
                 .00       .00       .00       .00       .00       .00       .00       .00       .00       .00
                 .00       .00       .00       .01       .01       .01       .01       .01       .01       .03
                 .03       .03       .05       .05       .05       .15       .15       .15       .03       .03
                 .03       .01       .01       .01       .01       .01       .01       .00       .00       .00
                 .00       .00       .00       .00       .00       .00       .00       .00       .00       .00
                 .00       .00

15 JD        INDEX STORM NO. 2
                  STRM       3.03  PRECIPITATION DEPTH
                  TRDA        .50  TRANSPOSITION DRAINAGE AREA

 0 PI          PRECIPITATION PATTERN
                 .00       .00       .00       .00       .00       .00       .00       .00       .00       .00
```

.00	.00	.00	.00	.00	.00	.00	.00	.00	.00
.00	.00	.00	.00	.00	.00	.00	.00	.00	.00
.00	.00	.00	.01	.01	.01	.01	.01	.01	.03
.03	.03	.05	.05	.05	.15	.15	.15	.03	.03
.03	.01	.01	.01	.01	.01	.01	.00	.00	.00
.00	.00	.00	.00	.00	.00	.00	.00	.00	.00
.00	.00								

16 JD INDEX STORM NO. 3

STRM 2.99 PRECIPITATION DEPTH

TRDA 2.80 TRANSPOSITION DRAINAGE AREA

17 PI PRECIPITATION PATTERN

.00	.00	.00	.00	.00	.00	.00	.00	.00	.00
.00	.00	.00	.00	.00	.00	.00	.00	.00	.00
.00	.00	.00	.00	.00	.00	.00	.00	.00	.00
.00	.00	.00	.01	.01	.01	.01	.01	.01	.03
.03	.03	.07	.07	.07	.08	.08	.08	.05	.05
.05	.02	.02	.02	.01	.01	.01	.00	.00	.00
.00	.00	.00	.00	.00	.00	.00	.00	.00	.00
.00	.00								

20 JD INDEX STORM NO. 4

STRM 2.81 PRECIPITATION DEPTH

TRDA 16.00 TRANSPOSITION DRAINAGE AREA

21 PI PRECIPITATION PATTERN

.01	.01	.00	.00	.00	.00	.00	.00	.00	.01
.01	.01	.00	.01	.00	.00	.00	.00	.00	.00
.00	.00	.01	.00	.00	.00	.00	.01	.01	.01
.01	.01	.01	.01	.01	.01	.02	.02	.02	.03
.03	.03	.06	.06	.06	.07	.07	.07	.04	.04
.04	.02	.02	.02	.01	.01	.01	.01	.01	.01
.00	.00	.00	.00	.00	.00	.00	.00	.00	.00
.00	.00								

24 JD INDEX STORM NO. 5

STRM 2.47 PRECIPITATION DEPTH

TRDA 90.00 TRANSPOSITION DRAINAGE AREA

25 PI PRECIPITATION PATTERN

.01	.01	.01	.00	.00	.00	.01	.01	.01	.01
.01	.01	.01	.01	.01	.01	.01	.01	.01	.01
.01	.01	.01	.01	.01	.01	.01	.01	.01	.01
.01	.01	.01	.01	.01	.01	.02	.02	.02	.03
.03	.03	.05	.05	.05	.05	.05	.05	.04	.04
.04	.02	.02	.02	.02	.02	.02	.01	.01	.01
.01	.01	.01	.01	.01	.01	.01	.01	.01	.01
.01	.01								

28 JD INDEX STORM NO. 6

STRM 1.74 PRECIPITATION DEPTH

TRDA 500.00 TRANSPOSITION DRAINAGE AREA

29 PI PRECIPITATION PATTERN

.01	.01	.01	.01	.01	.01	.01	.01	.01	.01
.01	.01	.01	.01	.01	.01	.01	.01	.01	.01
.01	.01	.01	.01	.01	.01	.01	.01	.01	.01
.01	.01	.01	.01	.01	.01	.02	.02	.02	.03
.03	.03	.04	.04	.04	.04	.04	.04	.04	.04
.04	.03	.03	.03	.02	.02	.02	.01	.01	.01
.01	.01	.01	.01	.01	.01	.01	.01	.01	.01
.01	.01								

RUNOFF SUMMARY
FLOW IN CUBIC FEET PER SECOND
TIME IN HOURS, AREA IN SQUARE MILES

OPERATION	STATION	PEAK FLOW	TIME OF PEAK	AVERAGE FLOW FOR MAXIMUM PERIOD 6-HOUR	24-HOUR	72-HOUR	BASIN AREA	MAXIMUM STAGE	TIME OF MAX STAGE
HYDROGRAPH AT	A	198.	4.08	22.	6.	5.	.09		
HYDROGRAPH AT	B	520.	4.17	74.	19.	18.	.29		
DIVERSION TO	D39S	84.	3.75	32.	8.	8.	.29		
HYDROGRAPH AT	D39	436.	4.17	41.	10.	10.	.29		
HYDROGRAPH AT	C	396.	4.17	53.	13.	13.	.21		
ROUTED TO	R39	389.	4.17	53.	13.	13.	.21		
2 COMBINED AT	C40	822.	4.17	94.	24.	23.	.50		
ROUTED TO	R40	694.	4.33	93.	24.	23.	.50		
HYDROGRAPH AT	D	287.	4.17	42.	11.	10.	.17		
ROUTED TO	R43	262.	4.25	42.	11.	10.	.17		
HYDROGRAPH AT	E	360.	4.17	52.	13.	13.	.20		
3 COMBINED AT	C43	1124.	4.33	182.	46.	44.	.87		
ROUTED TO	S43	986.	4.50	173.	46.	44.	.87		
DIVERSION TO	D43S	27.	3.00	27.	10.	9.	.87		
HYDROGRAPH AT	D43	959.	4.50	146.	37.	35.	.87		
ROUTED TO	R44	956.	4.50	146.	37.	35.	.87		
HYDROGRAPH AT	F	650.	4.25	93.	23.	22.	.50		
ROUTED TO	R45	643.	4.33	93.	23.	22.	.50		
2 COMBINED AT	C45	1363.	4.50	227.	57.	55.	1.37		
HYDROGRAPH AT	G	111.	4.42	29.	8.	7.	.12		
ROUTED TO	R47	100.	4.92	29.	8.	7.	.12		
HYDROGRAPH AT	H	110.	4.83	45.	12.	12.	.22		
3 COMBINED AT	C47	1420.	4.50	292.	74.	72.	1.71		
ROUTED TO	S47	1312.	4.67	292.	74.	72.	1.71		
DIVERSION TO	D47S	506.	4.67	84.	21.	20.	1.71		
HYDROGRAPH AT	D47	806.	4.67	208.	53.	51.	1.71		
DIVERSION TO	CRIT	155.	4.17	99.	26.	25.	1.71		
HYDROGRAPH AT	D47C	651.	4.67	109.	27.	26.	1.71		
ROUTED TO	R48	643.	4.75	109.	27.	26.	1.71		
HYDROGRAPH AT	I	569.	4.25	92.	23.	22.	.44		

2 COMBINED AT	C49	899.	4.67	190.	48.	46.	2.15
HYDROGRAPH AT	J	421.	4.33	89.	23.	22.	.39
2 COMBINED AT	C51	1162.	4.67	269.	68.	65.	2.54
DIVERSION TO	D51S	20.	2.50	20.	6.	5.	2.54
HYDROGRAPH AT	D51	1142.	4.67	249.	62.	60.	2.54
HYDROGRAPH AT	K	346.	4.17	49.	12.	12.	.22
HYDROGRAPH AT	L'	244.	4.33	53.	13.	13.	.23
ROUTED TO	RL'	234.	4.42	53.	13.	13.	.23
HYDROGRAPH AT	M'	199.	4.08	22.	6.	5.	.09
ROUTED TO	RM'	190.	4.17	22.	6.	5.	.09
2 COMBINED AT	CCHAN	367.	4.33	74.	19.	18.	.32
3 COMBINED AT	CB	1517.	4.58	357.	90.	86.	3.07
ROUTED TO	SB	100.	6.33	99.	72.	69.	3.07
HYDROGRAPH AT	RTN47	155.	4.17	99.	26.	25.	1.71
HYDROGRAPH AT	RTN51	20.	2.50	20.	6.	5.	2.54
2 COMBINED AT	CSD1	175.	4.17	116.	32.	31.	2.54
2 COMBINED AT	CSD2	274.	6.33	199.	99.	96.	5.61
HYDROGRAPH AT	L	335.	4.33	73.	18.	18.	.31
ROUTED TO	R59	311.	4.58	73.	18.	18.	.31
HYDROGRAPH AT	M	181.	4.08	20.	5.	5.	.08
HYDROGRAPH AT	N	622.	4.17	95.	24.	23.	.38
ROUTED TO	RCM	607.	4.33	95.	24.	23.	.38
HYDROGRAPH AT	O	988.	4.25	156.	39.	38.	.66
2 COMBINED AT	CCM	1420.	4.25	245.	62.	60.	1.04
ROUTED TO	RCP	1351.	4.42	244.	62.	60.	1.04
HYDROGRAPH AT	P	554.	4.25	83.	21.	20.	.40
2 COMBINED AT	CCP	1667.	4.42	317.	80.	77.	1.44
DIVERSION TO	DGCW	1454.	4.42	202.	51.	49.	1.44
HYDROGRAPH AT	DGC	213.	3.92	115.	30.	29.	1.44
ROUTED TO	R58	213.	5.33	114.	30.	29.	1.44
3 COMBINED AT	C59	532.	4.50	202.	52.	50.	1.83
ROUTED TO	S59	419.	5.08	203.	53.	51.	1.83
DIVERSION TO	D59S	285.	5.08	177.	46.	44.	1.83
HYDROGRAPH AT	D59W	134.	5.08	25.	6.	6.	1.83
HYDROGRAPH AT	RTNGC	1454.	4.42	202.	51.	49.	1.44

ROUTED TO	RGC	1402.	4.58	202.	51.	49.	1.44
HYDROGRAPH AT	Q	381.	4.42	88.	22.	22.	.47
2 COMBINED AT	CGC	2100.	4.58	311.	78.	75.	.47
ROUTED TO	SGC	2052.	4.67	310.	78.	75.	.47
ROUTED TO	R63	2057.	4.67	310.	78.	75.	.47
HYDROGRAPH AT	R	328.	4.17	42.	11.	10.	.18
3 COMBINED AT	C63	2046.	4.67	363.	91.	88.	2.49
ROUTED TO	SA	1646.	4.83	258.	81.	78.	2.49
DIVERSION TO	DSAW	20.	4.17	20.	15.	14.	2.49
HYDROGRAPH AT	DSA	1626.	4.83	238.	66.	64.	2.49
DIVERSION TO	DSAE	35.	4.67	33.	15.	14.	2.49
HYDROGRAPH AT	DWRA	1591.	4.83	205.	51.	49.	2.49
HYDROGRAPH AT	RTNSAE	35.	4.67	33.	15.	14.	2.49
HYDROGRAPH AT	RTN59	285.	5.08	177.	46.	44.	1.83
2 COMBINED AT	C60	317.	5.08	199.	62.	60.	3.02
HYDROGRAPH AT	S	736.	4.08	75.	19.	18.	.30
ROUTED TO	R57	580.	4.33	75.	19.	18.	.30
HYDROGRAPH AT	T	699.	4.17	91.	23.	22.	.36
2 COMBINED AT	C58	1120.	4.25	163.	41.	40.	.66
ROUTED TO	RMO	981.	4.50	162.	41.	40.	.66
HYDROGRAPH AT	U	177.	4.25	32.	8.	8.	.13
ROUTED TO	RBH	174.	4.25	32.	8.	8.	.13
HYDROGRAPH AT	V	339.	4.17	44.	11.	11.	.17
2 COMBINED AT	CBH	492.	4.17	75.	19.	18.	.30
ROUTED TO	R61	432.	4.42	75.	19.	18.	.30
HYDROGRAPH AT	W	1071.	4.25	161.	40.	39.	.66
3 COMBINED AT	CCK	1943.	4.42	385.	98.	94.	1.62
ROUTED TO	RCK	1834.	4.67	383.	98.	94.	1.62
HYDROGRAPH AT	X	809.	4.17	113.	28.	27.	.47
2 COMBINED AT	C67	2122.	4.58	485.	124.	119.	2.09

*** NORMAL END OF HEC-1 ***

50-YEAR, 6-HOUR HEC-1 EXISTING CONDITION OUTPUT

```
LINE          ID.......1.......2.......3.......4.......5.......6.......7.......8.......9......10

  1           ID        MARYVALE FLOODING MITIGATION STUDY
  2           ID        COE & VAN LOO CONSULTANTS, INC.
  3           ID        50 - YEAR, 6 - HOUR STORM
  4           ID        EXISTING CONDITIONS MODIFIED FOR DIVERSION AT 59TH AVE AND GOLF COURSE
  5           ID        FILE: H1EX50            DATE:  1/22/96
  6           ID        JOB #: 95-0024-01
  7           ID
              *DIAGRAM
  8           IT       5                    300
  9           IO       5       0
 10           IN      15
 11           JD    2.72    0.01
 12           PC    .000    .008    .016    .025    .033    .041    .050    .058    .066    .074
 13           PC    .087    .099    .118    .138    .216    .377    .834    .911    .931    .950
 14           PC    .962    .972    .983    .991   1.000
 15           JD    2.70    0.50
 16           JD    2.67    2.80
 17           PC    .000    .009    .016    .025    .034    .042    .051    .059    .067    .076
 18           PC    .087    .100    .120    .163    .252    .451    .694    .837    .900    .938
 19           PC    .950    .963    .975    .988   1.000
 20           JD    2.51    16.0
 21           PC    .000    .015    .020    .030    .048    .063    .076    .090    .105    .119
 22           PC    .135    .152    .175    .222    .304    .472    .670    .796    .868    .912
 23           PC    .946    .960    .973    .987   1.000
 24           JD    2.20    90.0
 25           PC    .000    .021    .035    .051    .071    .087    .105    .125    .143    .160
 26           PC    .179    .201    .232    .281    .364    .500    .658    .773    .841    .888
 27           PC    .927    .945    .964    .982   1.000
 28           JD    1.55   500.0
 29           PC    .000    .024    .043    .059    .078    .098    .119    .141    .162    .186
 30           PC    .212    .239    .271    .321    .408    .515    .627    .735    .814    .864
 31           PC    .907    .930    .954    .977   1.000

 32           KK       A
 33           KM    SUB-BASIN A
 34           KM    6-HOUR RAINFALL, PATTERN NO. 1.00 WAS USED TO FIND TC & R FOR THIS BASIN
 35           KM    THIS BASIN USED RAINFALL REDUCTION FACTOR OF  .999
 36           KM      L =  .47  Kb = .029  Adj. Slope =   14.8
 37           BA    .095
 38           LG    .150    .250   4.300    .620  55.000
 39           UC    .308    .211
 40           UA       0       5      16      30      65      77      84      90      94      97
 41           UA     100

 42           KK       B
 43           KM    SUB-BASIN B
 44           KM    6-HOUR RAINFALL, PATTERN NO. 1.00 WAS USED TO FIND TC & R FOR THIS BASIN
 45           KM    THIS BASIN USED RAINFALL REDUCTION FACTOR OF  .996
 46           KM      L = 1.03  Kb = .026  Adj. Slope =   16.5
 47           BA    .294
 48           LG    .150    .250   5.670    .279  55.000
 49           UC    .446    .311
 50           UA       0       5      16      30      65      77      84      90      94      97
 51           UA     100
```

RUNOFF SUMMARY
FLOW IN CUBIC FEET PER SECOND
TIME IN HOURS, AREA IN SQUARE MILES

OPERATION	STATION	PEAK FLOW	TIME OF PEAK	AVERAGE FLOW FOR MAXIMUM PERIOD 6-HOUR	24-HOUR	72-HOUR	BASIN AREA	MAXIMUM STAGE	TIME OF MAX STAGE
HYDROGRAPH AT	A	172.	4.08	19.	5.	5.	.09		
HYDROGRAPH AT	B	454.	4.17	64.	16.	16.	.29		
DIVERSION TO	D39S	84.	3.75	31.	8.	7.	.29		
HYDROGRAPH AT	D39	370.	4.17	34.	8.	8.	.29		
HYDROGRAPH AT	C	347.	4.17	46.	12.	11.	.21		
ROUTED TO	R39	340.	4.17	46.	12.	11.	.21		
2 COMBINED AT	C40	708.	4.17	80.	20.	19.	.50		
ROUTED TO	R40	585.	4.42	79.	20.	19.	.50		
HYDROGRAPH AT	D	251.	4.17	37.	9.	9.	.17		
ROUTED TO	R43	223.	4.25	37.	9.	9.	.17		
HYDROGRAPH AT	E	317.	4.17	46.	12.	11.	.20		
3 COMBINED AT	C43	952.	4.33	156.	40.	38.	.87		
ROUTED TO	S43	835.	4.50	149.	40.	38.	.87		
DIVERSION TO	D43S	27.	3.08	27.	9.	9.	.87		
HYDROGRAPH AT	D43	808.	4.50	122.	30.	29.	.87		
ROUTED TO	R44	801.	4.50	122.	30.	29.	.87		
HYDROGRAPH AT	F	555.	4.25	79.	20.	19.	.50		
ROUTED TO	R45	548.	4.33	79.	20.	19.	.50		
2 COMBINED AT	C45	1145.	4.50	189.	47.	46.	1.37		
HYDROGRAPH AT	G	97.	4.42	26.	7.	6.	.12		
ROUTED TO	R47	85.	5.00	26.	7.	6.	.12		
HYDROGRAPH AT	H	94.	4.83	39.	10.	10.	.22		
3 COMBINED AT	C47	1193.	4.50	245.	62.	60.	1.71		
ROUTED TO	S47	1093.	4.67	245.	62.	60.	1.71		
DIVERSION TO	D47S	448.	4.67	82.	21.	20.	1.71		
HYDROGRAPH AT	D47	645.	4.67	163.	42.	40.	1.71		
DIVERSION TO	CRIT	58.	3.92	44.	12.	12.	1.71		
HYDROGRAPH AT	D47C	587.	4.67	119.	30.	29.	1.71		
ROUTED TO	R48	580.	4.75	119.	30.	29.	1.71		
HYDROGRAPH AT	I	489.	4.25	79.	20.	19.	.44		

2 COMBINED AT	C49	785.	4.67	186.	47.	45.	2.15
HYDROGRAPH AT	J	365.	4.33	77.	20.	19.	.39
2 COMBINED AT	C51	1009.	4.67	253.	64.	62.	2.54
ROUTED TO	S51	888.	4.92	253.	64.	62.	2.54
DIVERSION TO	D51S	186.	3.92	107.	28.	27.	2.54
HYDROGRAPH AT	D51	702.	4.92	146.	37.	35.	2.54
HYDROGRAPH AT	RCRIT	58.	3.92	44.	12.	12.	1.71
HYDROGRAPH AT	RTN51	186.	3.92	107.	28.	27.	2.54
2 COMBINED AT	CSD	244.	3.92	150.	40.	39.	2.54
2 COMBINED AT	C52	850.	4.92	278.	72.	69.	5.08
HYDROGRAPH AT	K	300.	4.17	43.	11.	10.	.22
ROUTED TO	R55	286.	4.33	43.	11.	10.	.22
ROUTED TO	S55	276.	4.42	43.	11.	10.	.22
DIVERSION TO	D55S	0.	.08	0.	0.	0.	.22
HYDROGRAPH AT	D55	276.	4.42	43.	11.	10.	.22
HYDROGRAPH AT	L	495.	4.33	108.	28.	27.	.54
ROUTED TO	R59	475.	4.50	108.	28.	27.	.54
HYDROGRAPH AT	M	333.	4.08	36.	9.	9.	.17
HYDROGRAPH AT	N	543.	4.17	83.	21.	20.	.38
ROUTED TO	RCM	527.	4.33	83.	21.	20.	.38
HYDROGRAPH AT	O	860.	4.25	136.	34.	33.	.66
2 COMBINED AT	CCM	1228.	4.25	213.	54.	52.	1.04
ROUTED TO	RCP	1157.	4.50	212.	54.	52.	1.04
HYDROGRAPH AT	P	476.	4.25	71.	18.	17.	.40
2 COMBINED AT	CCP	1413.	4.42	274.	70.	67.	1.44
DIVERSION TO	DGCW	1200.	4.42	164.	41.	39.	1.44
HYDROGRAPH AT	DGC	213.	3.92	110.	29.	28.	1.44
4 COMBINED AT	C59	917.	4.42	285.	73.	70.	2.37
ROUTED TO	S59	837.	4.67	285.	73.	70.	2.37
DIVERSION TO	D59S	423.	4.67	208.	54.	52.	2.37
HYDROGRAPH AT	D59	415.	4.67	77.	19.	18.	2.37
HYDROGRAPH AT	RTNGC	1200.	4.42	164.	41.	39.	1.44
ROUTED TO	RGC	1159.	4.67	164.	41.	39.	1.44
HYDROGRAPH AT	Q	322.	4.42	75.	19.	18.	.47
2 COMBINED AT	CGC	1746.	4.58	257.	64.	62.	.47

ROUTED TO	SGC	1718.	4.67	257.	64.	62.	.47
ROUTED TO	R63	1682.	4.75	256.	64.	62.	.47
HYDROGRAPH AT	R	287.	4.17	36.	9.	9.	.18
3 COMBINED AT	C63	1676.	4.75	321.	81.	78.	3.02
ROUTED TO	S63	1659.	4.83	321.	81.	78.	3.02
DIVERSION TO	D63E	52.	3.67	37.	10.	9.	3.02
HYDROGRAPH AT	D63	1607.	4.83	285.	71.	69.	3.02
DIVERSION TO	D64S	1555.	4.83	274.	69.	66.	3.02
HYDROGRAPH AT	D64	52.	4.83	10.	3.	2.	3.02
HYDROGRAPH AT	RTN63	52.	3.67	37.	10.	9.	3.02
HYDROGRAPH AT	RTN59	423.	4.67	208.	54.	52.	2.37
2 COMBINED AT	C60	468.	4.67	244.	64.	61.	3.02
HYDROGRAPH AT	S	646.	4.08	65.	16.	16.	.30
ROUTED TO	R57	498.	4.33	65.	16.	16.	.30
HYDROGRAPH AT	T	612.	4.17	79.	20.	19.	.36
2 COMBINED AT	C58	957.	4.25	142.	36.	35.	.66
ROUTED TO	RMO	830.	4.50	142.	36.	35.	.66
HYDROGRAPH AT	U	155.	4.17	27.	7.	7.	.13
ROUTED TO	RBH	149.	4.33	27.	7.	7.	.13
HYDROGRAPH AT	V	298.	4.17	39.	10.	9.	.17
2 COMBINED AT	CBH	430.	4.17	66.	17.	16.	.30
ROUTED TO	R61	367.	4.42	66.	17.	16.	.30
HYDROGRAPH AT	W	939.	4.25	140.	35.	34.	.66
3 COMBINED AT	CCK	1627.	4.42	334.	85.	82.	1.62
ROUTED TO	RCK	1529.	4.67	333.	85.	82.	1.62
HYDROGRAPH AT	X	708.	4.17	98.	25.	24.	.47
2 COMBINED AT	C67	1763.	4.67	421.	108.	104.	2.09

*** NORMAL END OF HEC-1 ***

10-YEAR, 6-HOUR HEC-1 EXISTING CONDITION OUTPUT

```
****************************************                    ****************************************
*                                      *                    *                                      *
*  FLOOD HYDROGRAPH PACKAGE  (HEC-1)   *                    *   U.S. ARMY CORPS OF ENGINEERS       *
*          SEPTEMBER 1990              *                    *   HYDROLOGIC ENGINEERING CENTER      *
*           VERSION 4.0                *                    *        609 SECOND STREET             *
*                                      *                    *      DAVIS, CALIFORNIA 95616         *
* RUN DATE  01/22/1996  TIME  11:31:00 *                    *         (916) 756-1104               *
*                                      *                    *                                      *
****************************************                    ****************************************
```

```
                    MARYVALE FLOOD MITIGATION STUDY
                    COE & VAN LOO CONSULTING, INC.
                     10-YEAR, 6-HOUR STORM
                    EXISTING CONDITIONS MODIFIED FOR DIVERSION AT 59TH AVE AND GOLF COURSE
                    FILE: H1EXT10          DATE:   1/22/96
                    JOB #: 95-0024-01

  9 IO        OUTPUT CONTROL VARIABLES
                  IPRNT          5  PRINT CONTROL
                  IPLOT          0  PLOT CONTROL
                  QSCAL         0.  HYDROGRAPH PLOT SCALE

  IT          HYDROGRAPH TIME DATA
                   NMIN          5  MINUTES IN COMPUTATION INTERVAL
                  IDATE      1   0  STARTING DATE
                  ITIME       0000  STARTING TIME
                     NQ        300  NUMBER OF HYDROGRAPH ORDINATES
                 NDDATE      2   0  ENDING DATE
                 NDTIME       0055  ENDING TIME
                  ICENT         19  CENTURY MARK

              COMPUTATION INTERVAL     .08 HOURS
                   TOTAL TIME BASE   24.92 HOURS

        ENGLISH UNITS
             DRAINAGE AREA          SQUARE MILES
             PRECIPITATION DEPTH    INCHES
             LENGTH, ELEVATION      FEET
             FLOW                   CUBIC FEET PER SECOND
             STORAGE VOLUME         ACRE-FEET
             SURFACE AREA           ACRES
             TEMPERATURE            DEGREES FAHRENHEIT

 11 JD        INDEX STORM NO. 1
                   STRM       1.95  PRECIPITATION DEPTH
                   TRDA        .01  TRANSPOSITION DRAINAGE AREA

 12 PI          PRECIPITATION PATTERN
                  .00       .00       .00       .00       .00       .00       .00       .00       .00       .00
                  .00       .00       .00       .00       .00       .00       .00       .00       .00       .00
                  .00       .00       .00       .00       .00       .00       .00       .00       .00       .00
                  .00       .00       .00       .01       .01       .01       .01       .01       .01       .03
                  .03       .03       .05       .05       .05       .15       .15       .15       .03       .03
                  .03       .01       .01       .01       .01       .01       .01       .00       .00       .00
                  .00       .00       .00       .00       .00       .00       .00       .00       .00       .00
                  .00       .00

 15 JD        INDEX STORM NO. 2
                   STRM       1.94  PRECIPITATION DEPTH
                   TRDA        .50  TRANSPOSITION DRAINAGE AREA

  0 PI          PRECIPITATION PATTERN
                  .00       .00       .00       .00       .00       .00       .00       .00       .00       .00
```

RUNOFF SUMMARY
FLOW IN CUBIC FEET PER SECOND
TIME IN HOURS, AREA IN SQUARE MILES

OPERATION	STATION	PEAK FLOW	TIME OF PEAK	AVERAGE FLOW FOR MAXIMUM PERIOD 6-HOUR	24-HOUR	72-HOUR	BASIN AREA	MAXIMUM STAGE	TIME OF MAX STAGE
HYDROGRAPH AT	A	114.	4.08	13.	3.	3.	.09		
HYDROGRAPH AT	B	305.	4.17	43.	11.	10.	.29		
DIVERSION TO	D39S	84.	3.83	26.	7.	6.	.29		
HYDROGRAPH AT	D39	221.	4.17	17.	4.	4.	.29		
HYDROGRAPH AT	C	235.	4.17	31.	8.	8.	.21		
ROUTED TO	R39	224.	4.17	31.	8.	8.	.21		
2 COMBINED AT	C40	444.	4.17	48.	12.	12.	.50		
ROUTED TO	R40	337.	4.42	48.	12.	12.	.50		
HYDROGRAPH AT	D	169.	4.17	25.	6.	6.	.17		
ROUTED TO	R43	146.	4.33	25.	6.	6.	.17		
HYDROGRAPH AT	E	216.	4.17	31.	8.	8.	.20		
3 COMBINED AT	C43	556.	4.42	99.	25.	24.	.87		
ROUTED TO	S43	481.	4.58	94.	25.	24.	.87		
DIVERSION TO	D43S	27.	3.42	27.	8.	8.	.87		
HYDROGRAPH AT	D43	454.	4.58	67.	17.	16.	.87		
ROUTED TO	R44	454.	4.58	67.	17.	16.	.87		
HYDROGRAPH AT	F	337.	4.25	46.	12.	11.	.50		
ROUTED TO	R45	331.	4.33	46.	12.	11.	.50		
2 COMBINED AT	C45	623.	4.58	104.	26.	25.	1.37		
HYDROGRAPH AT	G	64.	4.42	17.	4.	4.	.12		
ROUTED TO	R47	51.	5.33	17.	4.	4.	.12		
HYDROGRAPH AT	H	60.	4.83	25.	7.	6.	.22		
3 COMBINED AT	C47	658.	4.58	138.	35.	34.	1.71		
ROUTED TO	S47	577.	4.75	138.	35.	34.	1.71		
DIVERSION TO	D47S	219.	4.75	38.	10.	9.	1.71		
HYDROGRAPH AT	D47	359.	4.75	100.	26.	25.	1.71		
DIVERSION TO	CRIT	58.	4.08	39.	10.	10.	1.71		
HYDROGRAPH AT	D47C	301.	4.75	61.	15.	15.	1.71		
ROUTED TO	R48	293.	4.92	61.	15.	15.	1.71		
HYDROGRAPH AT	I	307.	4.25	50.	12.	12.	.44		

2 COMBINED AT	C49	378.	4.83	100.	25.	24.	2.15
HYDROGRAPH AT	J	238.	4.33	51.	13.	12.	.39
2 COMBINED AT	C51	491.	4.83	141.	36.	35.	2.54
ROUTED TO	S51	407.	5.08	141.	36.	35.	2.54
DIVERSION TO	D51S	186.	4.00	93.	24.	23.	2.54
HYDROGRAPH AT	D51	221.	5.08	49.	12.	12.	2.54
HYDROGRAPH AT	RCRIT	58.	4.08	39.	10.	10.	1.71
HYDROGRAPH AT	RTN51	186.	4.00	93.	24.	23.	2.54
2 COMBINED AT	CSD	244.	4.08	131.	34.	33.	2.54
2 COMBINED AT	C52	418.	5.08	166.	43.	42.	5.08
HYDROGRAPH AT	K	195.	4.17	28.	7.	7.	.22
ROUTED TO	R55	179.	4.33	28.	7.	7.	.22
ROUTED TO	S55	174.	4.42	28.	7.	7.	.22
DIVERSION TO	D55S	0.	.08	0.	0.	0.	.22
HYDROGRAPH AT	D55	174.	4.42	28.	7.	7.	.22
HYDROGRAPH AT	L	322.	4.33	71.	18.	17.	.54
ROUTED TO	R59	299.	4.58	71.	18.	17.	.54
HYDROGRAPH AT	M	226.	4.08	24.	6.	6.	.17
HYDROGRAPH AT	N	364.	4.25	56.	14.	14.	.38
ROUTED TO	RCM	346.	4.33	56.	14.	14.	.38
HYDROGRAPH AT	O	565.	4.25	90.	23.	22.	.66
2 COMBINED AT	CCM	786.	4.25	140.	35.	34.	1.04
ROUTED TO	RCP	725.	4.50	139.	35.	34.	1.04
HYDROGRAPH AT	P	300.	4.25	44.	11.	11.	.40
2 COMBINED AT	CCP	855.	4.50	176.	45.	43.	1.44
DIVERSION TO	DGCW	642.	4.50	79.	20.	19.	1.44
HYDROGRAPH AT	DGC	213.	4.08	96.	25.	24.	1.44
4 COMBINED AT	C59	636.	4.42	206.	53.	51.	2.37
ROUTED TO	S59	531.	4.83	207.	53.	51.	2.37
DIVERSION TO	D59S	322.	4.83	171.	44.	43.	2.37
HYDROGRAPH AT	D59	209.	4.83	35.	9.	8.	2.37
HYDROGRAPH AT	RTNGC	642.	4.50	79.	20.	19.	1.44
ROUTED TO	RGC	583.	4.83	79.	20.	19.	1.44
HYDROGRAPH AT	Q	192.	4.42	44.	11.	11.	.47
2 COMBINED AT	CGC	956.	4.75	141.	35.	34.	.47

ROUTED TO	SGC	922.	4.83	140.	35.	34.	.47
ROUTED TO	R63	896.	4.83	140.	35.	34.	.47
HYDROGRAPH AT	R	191.	4.17	24.	6.	6.	.18
3 COMBINED AT	C63	929.	5.00	181.	46.	44.	3.02
ROUTED TO	S63	733.	5.00	155.	39.	38.	3.02
DIVERSION TO	D63E	52.	3.83	34.	9.	9.	3.02
HYDROGRAPH AT	D63	681.	5.00	120.	30.	29.	3.02
DIVERSION TO	D64S	655.	5.00	116.	29.	28.	3.02
HYDROGRAPH AT	D64	27.	5.00	4.	1.	1.	3.02
HYDROGRAPH AT	RTN63	52.	3.83	34.	9.	9.	3.02
HYDROGRAPH AT	RTN59	322.	4.83	171.	44.	43.	2.37
2 COMBINED AT	C60	369.	4.83	205.	53.	51.	3.02
HYDROGRAPH AT	S	437.	4.08	44.	11.	11.	.30
ROUTED TO	R57	297.	4.42	44.	11.	11.	.30
HYDROGRAPH AT	T	412.	4.17	53.	13.	13.	.36
2 COMBINED AT	C58	577.	4.25	95.	24.	23.	.66
ROUTED TO	RMO	478.	4.58	95.	24.	23.	.66
HYDROGRAPH AT	U	103.	4.25	18.	5.	4.	.13
ROUTED TO	RBH	98.	4.33	18.	5.	4.	.13
HYDROGRAPH AT	V	203.	4.17	26.	7.	6.	.17
2 COMBINED AT	CBH	287.	4.17	44.	11.	11.	.30
ROUTED TO	R61	208.	4.58	44.	11.	11.	.30
HYDROGRAPH AT	W	631.	4.25	92.	23.	22.	.66
3 COMBINED AT	CCK	946.	4.50	219.	56.	53.	1.62
ROUTED TO	RCK	880.	4.83	217.	56.	53.	1.62
HYDROGRAPH AT	X	471.	4.17	64.	16.	16.	.47
2 COMBINED AT	C67	998.	4.75	272.	70.	67.	2.09

*** NORMAL END OF HEC-1 ***

2-YEAR, 6-HOUR HEC-1 EXISTING CONDITION OUTPUT

```
LINE          ID.......1.......2.......3.......4.......5.......6.......7.......8.......9......10

  1           ID        MARYVALE FLOOD MITIGATION STUDY
  2           ID        COE & VAN LOO CONSULTING, INC.
  3           ID        2 - YEAR, 6-HOUR STORM
  4           ID        EXISTING CONDITIONS MODIFIED FOR DIVERSION AT 59TH AVE AND GOLF COURSE
  5           ID        FILE: H1EX2            DATE:   1/22/96
  6           ID        JOB #: 95-0024-01
  7           ID
              *DIAGRAM
  8           IT      5                    300
  9           IO     -5       0
 10           IN     15
 11           JD   1.17    0.01
 12           PC   .000    .008    .016    .025    .033    .041    .050    .058    .066    .074
 13           PC   .087    .099    .118    .138    .216    .377    .834    .911    .931    .950
 14           PC   .962    .972    .983    .991   1.000
 15           JD   1.16    0.50
 16           JD   1.15    2.80
 17           PC   .000    .009    .016    .025    .034    .042    .051    .059    .067    .076
 18           PC   .087    .100    .120    .163    .252    .451    .694    .837    .900    .938
 19           PC   .950    .963    .975    .988   1.000
 20           JD   1.08    16.0
 21           PC   .000    .015    .020    .030    .048    .063    .076    .090    .105    .119
 22           PC   .135    .152    .175    .222    .304    .472    .670    .796    .868    .912
 23           PC   .946    .960    .973    .987   1.000
 24           JD   0.95    90.0
 25           PC   .000    .021    .035    .051    .071    .087    .105    .125    .143    .160
 26           PC   .179    .201    .232    .281    .364    .500    .658    .773    .841    .888
 27           PC   .927    .945    .964    .982   1.000
 28           JD   0.67   500.0
 29           PC   .000    .024    .043    .059    .078    .098    .119    .141    .162    .186
 30           PC   .212    .239    .271    .321    .408    .515    .627    .735    .814    .864
 31           PC   .907    .930    .954    .977   1.000

 32           KK      A
 33           KM   SUB-BASIN A
 34           KM   6-HOUR RAINFALL, PATTERN NO. 1.00 WAS USED TO FIND TC & R FOR THIS BASIN
 35           KM   THIS BASIN USED RAINFALL REDUCTION FACTOR OF  .999
 36           KM     L =  .47  Kb = .029  Adj. Slope =   14.8
 37           BA   .095
 38           LG   .150    .250   4.300    .620  55.000
 39           UC   .308    .211
 40           UA      0       5      16      30      65      77      84      90      94      97
 41           UA    100

 42           KK      B
 43           KM   SUB-BASIN B
 44           KM   6-HOUR RAINFALL, PATTERN NO. 1.00 WAS USED TO FIND TC & R FOR THIS BASIN
 45           KM   THIS BASIN USED RAINFALL REDUCTION FACTOR OF  .996
 46           KM     L = 1.03  Kb = .026  Adj. Slope =   16.5
 47           BA   .294
 48           LG   .150    .250   5.670    .279  55.000
 49           UC   .446    .311
 50           UA      0       5      16      30      65      77      84      90      94      97
 51           UA    100
```

RUNOFF SUMMARY
FLOW IN CUBIC FEET PER SECOND
TIME IN HOURS, AREA IN SQUARE MILES

OPERATION	STATION	PEAK FLOW	TIME OF PEAK	AVERAGE FLOW FOR MAXIMUM PERIOD 6-HOUR	24-HOUR	72-HOUR	BASIN AREA	MAXIMUM STAGE	TIME OF MAX STAGE
HYDROGRAPH AT	A	53.	4.08	7.	2.	2.	.09		
HYDROGRAPH AT	B	157.	4.17	23.	6.	6.	.29		
DIVERSION TO	D39S	84.	4.00	19.	5.	5.	.29		
HYDROGRAPH AT	D39	73.	4.17	4.	1.	1.	.29		
HYDROGRAPH AT	C	123.	4.17	17.	4.	4.	.21		
ROUTED TO	R39	114.	4.25	17.	4.	4.	.21		
2 COMBINED AT	C40	183.	4.17	21.	5.	5.	.50		
ROUTED TO	R40	110.	4.50	21.	5.	5.	.50		
HYDROGRAPH AT	D	89.	4.17	14.	3.	3.	.17		
ROUTED TO	R43	67.	4.33	14.	3.	3.	.17		
HYDROGRAPH AT	E	115.	4.17	17.	4.	4.	.20		
3 COMBINED AT	C43	213.	4.42	48.	12.	12.	.87		
ROUTED TO	S43	155.	4.75	46.	12.	12.	.87		
DIVERSION TO	D43S	27.	3.58	26.	7.	7.	.87		
HYDROGRAPH AT	D43	128.	4.75	20.	5.	5.	.87		
ROUTED TO	R44	121.	4.83	20.	5.	5.	.87		
HYDROGRAPH AT	F	137.	4.25	20.	5.	5.	.50		
ROUTED TO	R45	130.	4.42	20.	5.	5.	.50		
2 COMBINED AT	C45	141.	4.83	30.	8.	7.	1.37		
HYDROGRAPH AT	G	34.	4.42	9.	2.	2.	.12		
ROUTED TO	R47	27.	5.33	9.	2.	2.	.12		
HYDROGRAPH AT	H	29.	4.83	12.	3.	3.	.22		
3 COMBINED AT	C47	167.	4.92	45.	12.	11.	1.71		
ROUTED TO	S47	132.	5.17	45.	12.	11.	1.71		
DIVERSION TO	D47S	23.	5.17	5.	1.	1.	1.71		
HYDROGRAPH AT	D47	109.	5.17	41.	11.	10.	1.71		
DIVERSION TO	CRIT	58.	4.50	29.	8.	7.	1.71		
HYDROGRAPH AT	D47C	51.	5.17	12.	3.	3.	1.71		
ROUTED TO	R48	48.	5.50	12.	3.	3.	1.71		
HYDROGRAPH AT	I	135.	4.25	23.	6.	6.	.44		

2 COMBINED AT	C49	76.	4.33	27.	7.	7.	2.15
HYDROGRAPH AT	J	118.	4.33	26.	7.	6.	.39
2 COMBINED AT	C51	144.	4.33	47.	12.	11.	2.54
ROUTED TO	S51	144.	4.33	47.	12.	11.	2.54
DIVERSION TO	D51S	141.	4.33	46.	12.	11.	2.54
HYDROGRAPH AT	D51	4.	4.33	0.	0.	0.	2.54
HYDROGRAPH AT	RCRIT	58.	4.50	29.	8.	7.	1.71
HYDROGRAPH AT	RTN51	141.	4.33	46.	12.	11.	2.54
2 COMBINED AT	CSD	198.	4.42	74.	19.	19.	2.54
2 COMBINED AT	C52	179.	4.42	69.	18.	17.	5.08
HYDROGRAPH AT	K	94.	4.17	14.	4.	3.	.22
ROUTED TO	R55	81.	4.42	14.	4.	3.	.22
ROUTED TO	S55	80.	4.50	14.	4.	3.	.22
DIVERSION TO	D55S	0.	.08	0.	0.	0.	.22
HYDROGRAPH AT	D55	80.	4.50	14.	4.	3.	.22
HYDROGRAPH AT	L	157.	4.33	36.	9.	9.	.54
ROUTED TO	R59	140.	4.67	36.	9.	9.	.54
HYDROGRAPH AT	M	113.	4.08	12.	3.	3.	.17
HYDROGRAPH AT	N	188.	4.25	30.	8.	7.	.38
ROUTED TO	RCM	170.	4.42	30.	8.	7.	.38
HYDROGRAPH AT	O	279.	4.25	47.	12.	11.	.66
2 COMBINED AT	CCM	373.	4.33	73.	18.	18.	1.04
ROUTED TO	RCP	326.	4.58	72.	18.	18.	1.04
HYDROGRAPH AT	P	130.	4.25	21.	5.	5.	.40
2 COMBINED AT	CCP	358.	4.58	87.	22.	21.	1.44
DIVERSION TO	DGCW	145.	4.58	13.	3.	3.	1.44
HYDROGRAPH AT	DGC	213.	4.42	74.	19.	18.	1.44
4 COMBINED AT	C59	378.	4.50	125.	32.	31.	2.37
ROUTED TO	S59	268.	5.25	126.	32.	31.	2.37
DIVERSION TO	D59S	264.	5.25	125.	32.	31.	2.37
HYDROGRAPH AT	D59	5.	5.17	0.	0.	0.	2.37
HYDROGRAPH AT	RTNGC	145.	4.58	13.	3.	3.	1.44
ROUTED TO	RGC	72.	5.17	13.	3.	3.	1.44
HYDROGRAPH AT	Q	75.	4.42	18.	5.	4.	.47
2 COMBINED AT	CGC	222.	5.08	41.	10.	10.	.47

ROUTED TO	SGC	190.	5.25	41.	10.	10.	.47
ROUTED TO	R63	184.	5.33	41.	10.	10.	.47
HYDROGRAPH AT	R	93.	4.17	11.	3.	3.	.18
3 COMBINED AT	C63	187.	6.00	81.	20.	19.	3.02
ROUTED TO	S63	64.	4.33	25.	6.	6.	3.02
DIVERSION TO	D63E	52.	4.33	24.	6.	6.	3.02
HYDROGRAPH AT	D63	13.	4.33	1.	0.	0.	3.02
DIVERSION TO	D64S	13.	4.33	1.	0.	0.	3.02
HYDROGRAPH AT	D64	0.	.08	0.	0.	0.	3.02
HYDROGRAPH AT	RTN63	52.	4.33	24.	6.	6.	3.02
HYDROGRAPH AT	RTN59	264.	5.25	125.	32.	31.	2.37
2 COMBINED AT	C60	299.	5.25	148.	38.	37.	3.02
HYDROGRAPH AT	S	222.	4.08	24.	6.	6.	.30
ROUTED TO	R57	129.	4.50	24.	6.	6.	.30
HYDROGRAPH AT	T	213.	4.17	29.	7.	7.	.36
2 COMBINED AT	C58	247.	4.25	51.	13.	12.	.66
ROUTED TO	RMO	194.	4.75	51.	13.	12.	.66
HYDROGRAPH AT	U	52.	4.25	10.	2.	2.	.13
ROUTED TO	RBH	46.	4.42	10.	2.	2.	.13
HYDROGRAPH AT	V	106.	4.17	14.	3.	3.	.17
2 COMBINED AT	CBH	142.	4.17	23.	6.	6.	.30
ROUTED TO	R61	105.	4.67	23.	6.	6.	.30
HYDROGRAPH AT	W	313.	4.25	45.	11.	11.	.66
3 COMBINED AT	CCK	383.	4.42	109.	28.	27.	1.62
ROUTED TO	RCK	350.	5.00	109.	28.	27.	1.62
HYDROGRAPH AT	X	231.	4.25	32.	8.	8.	.47
2 COMBINED AT	C67	379.	4.92	132.	34.	33.	2.09

*** NORMAL END OF HEC-1 ***

100-YEAR, 24-HOUR HEC-1 EXISTING CONDITION OUTPUT

```
LINE          ID.......1.......2.......3.......4.......5.......6.......7.......8.......9......10

  1           ID        MARYVALE FLOODING MITIGATION STUDY
  2           ID        COE & VAN LOO CONSULTANTS, INC.
  3           ID        100-YEAR, 24-HOUR STORM
  4           ID        FILE: H1EX124          DATE: 1/24/96
  5           ID        JOB #: 95-0024-01
  6           ID
              *DIAGRAM
  7           IT      5                    300
  8           IO      5       0
  9           IN     15
 10           JD   3.67    0.01
 11           PC   .000    .002    .005    .008    .011    .014    .017    .020    .023    .026
 12           PC   .029    .032    .035    .038    .041    .044    .048    .052    .056    .060
 13           PC   .064    .068    .072    .076    .080    .085    .090    .095    .100    .105
 14           PC   .110    .115    .120    .126    .133    .140    .147    .155    .163    .172
 15           PC   .181    .191    .203    .218    .236    .257    .283    .387    .663    .707
 16           PC   .735    .758    .776    .791    .804    .815    .825    .834    .842    .849
 17           PC   .856    .863    .869    .875    .881    .887    .893    .898    .903    .908
 18           PC   .913    .918    .922    .926    .930    .934    .938    .942    .946    .950
 19           PC   .953    .956    .959    .962    .965    .968    .971    .974    .977    .980
 20           PC   .983    .986    .989    .992    .995    .998   1.000
 21           JD   3.45   10.00
 22           JD   3.30   30.00
 23           JD   3.16   60.00
 24           JD   3.10   90.00
 25           JD   3.06  120.00
 26           JD   3.03  150.00
 27           JD   2.94  300.00
 28           JD   2.86  500.00

 29           KK      A
 30           KM   SUB-BASIN A
 31           KM   6-HOUR RAINFALL, PATTERN NO. 1.00 WAS USED TO FIND TC & R FOR THIS BASIN
 32           KM   THIS BASIN USED RAINFALL REDUCTION FACTOR OF  .999
 33           KM     L =  .47  Kb = .029  Adj. Slope =   14.8
 34           BA   .095
 35           LG   .150    .250   4.300    .620  55.000
 36           UC   .308    .211
 37           UA      0       5      16      30      65      77      84      90      94      97
 38           UA    100

 39           KK      B
 40           KM   SUB-BASIN B
 41           KM   6-HOUR RAINFALL, PATTERN NO. 1.00 WAS USED TO FIND TC & R FOR THIS BASIN
 42           KM   THIS BASIN USED RAINFALL REDUCTION FACTOR OF  .996
 43           KM     L = 1.03  Kb = .026  Adj. Slope =   16.5
 44           BA   .294
 45           LG   .150    .250   5.670    .279  55.000
 46           UC   .446    .311
 47           UA      0       5      16      30      65      77      84      90      94      97
 48           UA    100
```

RUNOFF SUMMARY
FLOW IN CUBIC FEET PER SECOND
TIME IN HOURS, AREA IN SQUARE MILES

OPERATION	STATION	PEAK FLOW	TIME OF PEAK	AVERAGE FLOW FOR MAXIMUM PERIOD 6-HOUR	24-HOUR	72-HOUR	BASIN AREA	MAXIMUM STAGE	TIME OF MAX STAGE
HYDROGRAPH AT	A	137.	12.08	18.	6.	6.	.09		
HYDROGRAPH AT	B	365.	12.17	58.	19.	18.	.29		
DIVERSION TO	D39S	84.	11.83	34.	13.	12.	.29		
HYDROGRAPH AT	D39	281.	12.17	24.	6.	6.	.29		
HYDROGRAPH AT	C	277.	12.17	42.	14.	13.	.21		
ROUTED TO	R39	271.	12.17	42.	14.	13.	.21		
2 COMBINED AT	C40	547.	12.17	66.	20.	19.	.50		
ROUTED TO	R40	435.	12.42	66.	20.	19.	.50		
HYDROGRAPH AT	D	201.	12.17	34.	11.	11.	.17		
ROUTED TO	R43	177.	12.25	34.	11.	11.	.17		
HYDROGRAPH AT	E	254.	12.17	42.	14.	14.	.20		
3 COMBINED AT	C43	782.	12.33	140.	44.	43.	.87		
ROUTED TO	S43	680.	12.50	130.	44.	43.	.87		
DIVERSION TO	D43S	27.	10.50	27.	19.	18.	.87		
HYDROGRAPH AT	D43	653.	12.50	103.	26.	25.	.87		
ROUTED TO	R44	644.	12.58	103.	26.	25.	.87		
HYDROGRAPH AT	F	450.	12.25	66.	18.	17.	.50		
ROUTED TO	R45	444.	12.33	66.	18.	17.	.50		
2 COMBINED AT	C45	1012.	12.50	167.	43.	42.	1.37		
HYDROGRAPH AT	G	78.	12.42	24.	8.	8.	.12		
ROUTED TO	R47	64.	13.08	24.	8.	7.	.12		
HYDROGRAPH AT	H	78.	12.83	35.	11.	11.	.22		
3 COMBINED AT	C47	1095.	12.50	224.	62.	60.	1.71		
ROUTED TO	S47	984.	12.67	224.	62.	60.	1.71		
DIVERSION TO	D47S	399.	12.67	71.	18.	17.	1.71		
HYDROGRAPH AT	D47	584.	12.67	152.	44.	42.	1.71		
DIVERSION TO	CRIT	58.	11.92	47.	18.	17.	1.71		
HYDROGRAPH AT	D47C	526.	12.67	105.	26.	25.	1.71		
ROUTED TO	R48	519.	12.75	105.	26.	25.	1.71		
HYDROGRAPH AT	I	394.	12.25	69.	21.	20.	.44		

2 COMBINED AT	C49	713.	12.67	172.	47.	45.	2.15
HYDROGRAPH AT	J	293.	12.33	70.	22.	21.	.39
2 COMBINED AT	C51	934.	12.67	240.	68.	66.	2.54
ROUTED TO	S51	817.	12.92	240.	68.	66.	2.54
DIVERSION TO	D51S	186.	11.92	111.	36.	35.	2.54
HYDROGRAPH AT	D51	631.	12.92	129.	32.	31.	2.54
HYDROGRAPH AT	RCRIT	58.	11.92	47.	18.	17.	1.71
HYDROGRAPH AT	RTN51	186.	11.92	111.	36.	35.	2.54
2 COMBINED AT	CSD	244.	11.92	157.	54.	52.	2.54
2 COMBINED AT	C52	866.	12.92	284.	85.	82.	5.08
HYDROGRAPH AT	K	243.	12.17	38.	12.	12.	.22
ROUTED TO	R55	227.	12.33	38.	12.	12.	.22
ROUTED TO	S55	219.	12.42	38.	12.	12.	.22
DIVERSION TO	D55S	0.	.08	0.	0.	0.	.22
HYDROGRAPH AT	D55	219.	12.42	38.	12.	12.	.22
HYDROGRAPH AT	L	403.	12.33	98.	31.	30.	.54
ROUTED TO	R59	383.	12.50	98.	31.	30.	.54
HYDROGRAPH AT	M	272.	12.08	33.	10.	10.	.17
HYDROGRAPH AT	N	435.	12.17	75.	25.	24.	.38
ROUTED TO	RCM	419.	12.33	75.	25.	24.	.38
HYDROGRAPH AT	O	719.	12.25	123.	40.	38.	.66
2 COMBINED AT	CCM	1110.	12.25	197.	64.	62.	1.04
ROUTED TO	RCP	1020.	12.50	196.	64.	61.	1.04
HYDROGRAPH AT	P	384.	12.25	62.	19.	18.	.40
2 COMBINED AT	CCP	1306.	12.42	257.	82.	79.	1.44
DIVERSION TO	DGCW	1093.	12.42	137.	34.	33.	1.44
HYDROGRAPH AT	DGC	213.	11.92	120.	48.	46.	1.44
4 COMBINED AT	C59	900.	12.42	285.	100.	96.	2.37
ROUTED TO	S59	786.	12.67	285.	100.	96.	2.37
DIVERSION TO	D59S	406.	12.67	217.	83.	80.	2.37
HYDROGRAPH AT	D59	380.	12.67	68.	17.	16.	2.37
HYDROGRAPH AT	RTNGC	1093.	12.42	137.	34.	33.	1.44
ROUTED TO	RGC	1045.	12.67	137.	34.	33.	1.44
HYDROGRAPH AT	Q	265.	12.42	65.	19.	18.	.47
2 COMBINED AT	CGC	1305.	12.67	204.	53.	51.	.47

ROUTED TO	SGC	1270.	12.75	196.	51.	49.	.47
ROUTED TO	R63	1263.	12.75	196.	51.	49.	.47
HYDROGRAPH AT	R	234.	12.17	33.	10.	9.	.18
3 COMBINED AT	C63	1656.	12.75	294.	77.	74.	3.02
ROUTED TO	S63	1623.	12.83	294.	77.	74.	3.02
DIVERSION TO	D63E	52.	11.83	37.	13.	12.	3.02
HYDROGRAPH AT	D63	1571.	12.83	257.	64.	62.	3.02
DIVERSION TO	D64S	1519.	12.83	247.	62.	60.	3.02
HYDROGRAPH AT	D64	52.	12.67	9.	2.	2.	3.02
HYDROGRAPH AT	RTN63	52.	11.83	37.	13.	12.	3.02
HYDROGRAPH AT	RTN59	406.	12.67	217.	83.	80.	2.37
2 COMBINED AT	C60	457.	12.67	254.	95.	92.	3.02
HYDROGRAPH AT	S	516.	12.08	59.	19.	19.	.30
ROUTED TO	R57	383.	12.33	59.	19.	19.	.30
HYDROGRAPH AT	T	488.	12.17	72.	24.	23.	.36
2 COMBINED AT	C58	762.	12.25	130.	43.	41.	.66
ROUTED TO	RMO	647.	12.50	130.	42.	41.	.66
HYDROGRAPH AT	U	125.	12.17	25.	8.	8.	.13
ROUTED TO	RBH	120.	12.33	25.	8.	8.	.13
HYDROGRAPH AT	V	241.	12.17	35.	11.	11.	.17
2 COMBINED AT	CBH	346.	12.17	59.	19.	18.	.30
ROUTED TO	R61	280.	12.50	59.	19.	18.	.30
HYDROGRAPH AT	W	792.	12.25	127.	38.	37.	.66
3 COMBINED AT	CCK	1447.	12.50	312.	98.	95.	1.62
ROUTED TO	RCK	1348.	12.67	311.	98.	94.	1.62
HYDROGRAPH AT	X	573.	12.17	87.	26.	25.	.47
2 COMBINED AT	C67	1584.	12.67	395.	123.	119.	2.09

*** NORMAL END OF HEC-1 ***

APPENDIX VII
ENGINEERING COMPUTATIONS

MARYVALE FLOODING MITIGATION PROJECT
AVERAGE UNIT COST TABLE

Size (")	Description	Unit	Unit Cost ($)	Area (ft^2)	Perimeter (ft)	K (cfs)	cfs/$
24	RGRCP	LF	60	3.1	6.3	246	4
30	RGRCP	LF	75	4.9	7.9	445	6
36	RGRCP	LF	90	7.1	9.4	724	8
42	RGRCP	LF	105	9.6	11.0	1093	10
48	RGRCP	LF	115	12.6	12.6	1560	14
54	RGRCP	LF	125	15.9	14.1	2136	17
60	RGRCP	LF	133	19.6	15.7	2829	21
66	RGRCP	LF	140	23.8	17.3	3648	26
72	RGRCP	LF	175	28.3	18.8	4601	26
78	RGRCP	LF	215	33.2	20.4	5696	26
84	RGRCP	LF	255	38.5	22.0	6941	27
90	RGRCP	LF	285	44.2	23.6	8343	29
96	RGRCP	LF	290	50.3	25.1	9910	34
108	RGRCP	LF	295	63.6	28.3	13567	46
120	RGRCP	LF	315	78.5	31.4	17969	57
132	RGRCP	LF	345	95.0	34.6	23169	67
144	RGRCP	LF	365	113.1	37.7	29221	80

Note: Pipe Capacity is computed by multiplying the Conveyance (K) by the square root of the slope.

29-Sep-95 Q:\950024\HYDRO\LOTUS\ALTA1

MARYVALE FLOODING MITIGATION PROJECT
ALTERNATIVE A1

Item No.	Capacity	Facilities Description & Location	Quantity	Unit	Unit Cost ($)	Cost ($)
1		House Demolition	71	EA	5,000	$355,000
		Landscape Restoration	15	AC	40,000	$1,500,000

Subtotal	~~$1,855,000~~
Engineering & Contingencies @ 40%	~~$742,000~~
Land Acquisition	$5,760,000
Surveying & Other Acquisition Costs @ 20%	$1,152,000
TOTAL PROJECT BUDGET	~~$9,509,000~~

Note: These cost estimates have been developed as a part of a preliminary submittal dated 9/29/95 Estimates are provided for the purposes of comparison only and are not intended to reflect an engineering estimate of the final construction cost. All costs are based upon a 1995 datum.

29-Sep-95 Q:\950024\HYDRO\LOTUS\ALTB1

MARYVALE FLOODING MITIGATION PROJECT
ALTERNATIVE B1

Item No.	Capacity	Facilities Description & Location	Quantity	Unit	Unit Cost ($)	Cost ($)
1		House Demolition	77	EA	5,000	$385,000
		Landscape Restoration	12	AC	40,000	$480,000

Subtotal	$865,000
Engineering & Contingencies @ 40%	$346,000
Land Acquisition	$4,188,000
Surveying & Other Acquisition Costs @ 20%	$837,600
TOTAL PROJECT BUDGET	**$6,236,600**

Note: These cost estimates have been developed as a part of a preliminary submittal dated 9/29/95 Estimates are provided for the purposes of comparison only and are not intended to reflect an engineering estimate of the final construction cost. All costs are based upon a 1995 datum.

29-Sep-95 Q:\950024\HYDRO\LOTUS\ALTB3

MARYVALE FLOODING MITIGATION PROJECT
ALTERNATIVE B3

Item No.	Capacity	Facilities Description & Location	Quantity	Unit	Unit Cost ($)	Cost ($)
1	165 AF	Detention Basin Excavation	266,000	CY	$3.00	$798,000
	72"	Detention Basin Storm Drain Outlet	500	LF	$175.00	$87,500
		Concrete Spillway	1	EA	20,000	$20,000

Subtotal	$905,500
Engineering & Contingencies @ 40%	$362,200
Land Acquisition	$6,400,000
Surveying & Other Acquisition Costs @ 20%	$1,280,000
TOTAL PROJECT BUDGET	**$8,947,700**

Note: These cost estimates have been developed as a part of a preliminary submittal dated 9/29/95 Estimates are provided for the purposes of comparison only and are not intended to reflect an engineering estimate of the final construction cost. All costs are based upon a 1995 datum.

29-Sep-95 Q:\950024\HYDRO\LOTUS\ALTa41

MARYVALE FLOODING MITIGATION PROJECT
ALTERNATIVE A4-1

Item No.	Capacity	Facilities Description & Location	Quantity	Unit	Unit Cost ($)	Cost ($)
1	165 AF	Detention Basin Excavation	266,000	CY	$3.00	$798,000
		24" RGRCP	4,000	LF	$60.00	$240,000
		108" RGRCP	8,400	LF	$295.00	$2,478,000
		114" RGRCP	1,200	LF	$305.00	$366,000
		144" RGRCP	3,000	LF	$365.00	$1,095,000
	40 AC	Golf Course Restoration	40	AC	$80,000.00	$3,200,000

Subtotal	~~$8,177,000~~
Engineering & Contingencies @ 40%	~~$3,270,800~~
Land Acquisition	$0
Surveying & Other Acquisition Costs @ 20%	$0
TOTAL PROJECT BUDGET	~~$11,447,800~~

Note: These cost estimates have been developed as a part of a preliminary submittal dated 9/29/95 Estimates are provided for the purposes of comparison only and are not intended to reflect an engineering estimate of the final construction cost. All costs are based upon a 1995 datum.

29-Sep-95 Q:\950024\HYDRO\LOTUS\ALTA42

MARYVALE FLOODING MITIGATION PROJECT
ALTERNATIVE A4-2

Item No.	Capacity	Facilities Description & Location	Quantity	Unit	Unit Cost ($)	Cost ($)
1	229 AF	Detention Basin Excavation	370,000	CY	$3.00	$1,110,000
		24" RGRCP	~~4,000~~	LF	$60.00	$240,000
		42" RGRCP	1,400	LF	$105.00	$147,000
		54" RGRCP	1,400	LF	$125.00	$175,000
		66" RGRCP	1,000	LF	$140.00	$140,000
		72" RGRCP	3,300	LF	$160.00	$528,000
		108" RGRCP	~~1,200~~	LF	~~$305.00~~	~~$366,000~~
		114" RGRCP	1,200	LF	$305.00	$366,000
		126" RGRCP	1,700	LF	$325.00	$552,500
		144" RGRCP	3,000	LF	$365.00	$1,095,000
		Golf Course Restoration	55	AC	$80,000.00	$4,400,000

Subtotal	~~$9,119,500~~
Engineering & Contingencies @ 40%	~~$3,647,800~~
Land Acquisition	$0
Surveying & Other Acquisition Costs @ 20%	$0
TOTAL PROJECT BUDGET	$12,767,300

Note: These cost estimates have been developed as a part of a preliminary submittal dated 9/29/95 Estimates are provided for the purposes of comparison only and are not intended to reflect an engineering estimate of the final construction cost. All costs are based upon a 1995 datum.

12-Oct-95 Q:\950024\HYDRO\LOTUS\ALTB4

MARYVALE FLOODING MITIGATION PROJECT
ALTERNATIVE B-4

Item No.	Capacity	Facilities Description & Location	Quantity	Unit	Unit Cost ($)	Cost ($)
		Channel Excavation	33,000	CY	$3.00	$99,000
1	1300 CFS	Concrete Channel B.P. (6" Thick)	5,600		$280.00	$1,568,000
		Demolition	77	EA	$5,000	$385,000
		7,920 LF 4-9'x8' CBC		EA	$8,965,000	$8,965,000

Subtotal	~~$11,017,000~~
Engineering & Contingencies @ 40%	~~$4,406,800~~
Land Acquisition	$4,188,000
Surveying & Other Acquisition Costs @ 20%	$837,600
TOTAL PROJECT BUDGET	~~$20,449,400~~

Note: These cost estimates have been developed as a part of a preliminary submittal dated 9/29/95 Estimates are provided for the purposes of comparison only and are not intended to reflect an engineering estimate of the final construction cost. All costs are based upon a 1995 datum.

12-Oct-95 Q:\950024\HYDRO\LOTUS\ALTA5

MARYVALE FLOODING MITIGATION PROJECT
ALTERNATIVE A5

Item No.	Capacity	Facilities Description & Location	Quantity	Unit	Unit Cost ($)	Cost ($)
1	274 AF	Detention Basin Excavation	442,000	CY	$3.00	$1,326,000
		24" RGRCP	1,320	LF	$60.00	$79,200
		42" RGRCP	1,400	LF	$105.00	$147,000
		54" RGRCP	1,400	LF	$125.00	$175,000
		108" RGRCP	8,480	LF	$295.00	$2,501,600
		114" RGRCP	1,200	LF	$305.00	$366,000
		120" RGRCP	3,000	LF	$315.00	$945,000
		144" RGRCP	1,300	LF	$365.00	$474,500
		Demolition	1	LS	$221,000.00	$221,000
		Land Restoration	23	AC	$80,000.00	$1,840,000

Subtotal	$8,075,300
Engineering & Contingencies @ 40%	$3,230,120
Land Acquisition	$6,947,000
Surveying & Other Acquisition Costs @ 20%	$1,389,400
TOTAL PROJECT BUDGET	$19,641,800

Note: These cost estimates have been developed as a part of a preliminary submittal dated 9/29/95 Estimates are provided for the purposes of comparison only and are not intended to reflect an engineering estimate of the final construction cost. All costs are based upon a 1995 datum.

29-Sep-95 Q:\950024\HYDRO\LOTUS\ALTB5

MARYVALE FLOODING MITIGATION PROJECT
ALTERNATIVE B5

Item No.	Capacity	Facilities Description & Location	Quantity	Unit	Unit Cost ($)	Cost ($)
1	192 AF	Detention Basin Excavation	310,000	CY	$3.00	$930,000
		at Grand Canal & 53rd Ave.				
		Channel Excavation	33,000	CY	$3.00	$99,000
		Concrete Channel Paving (6" thk)	5,600	CY	$280.00	$1,568,000
		24" RGRCP	11,000	LF	$55.00	$605,000
		Demolition	77	EA	$5,000.00	$385,000
		Fencing & Screening	4,900	LF	$26.00	$127,400
		Subtotal				$3,714,400
		Engineering & Contingencies @ 40%				$1,485,760
		Land Acquisition				$7,421,000
		Surveying & Other Acquisition Costs @ 20%				$1,484,200
		TOTAL PROJECT BUDGET				$14,105,360

Note: These cost estimates have been developed as a part of a preliminary submittal dated 9/29/95 Estimates are provided for the purposes of comparison only and are not intended to reflect an engineering estimate of the final construction cost. All costs are based upon a 1995 datum.

11-Oct-95 Q:\950024\HYDRO\LOTUS\ALTB6

MARYVALE FLOODING MITIGATION PROJECT
ALTERNATIVE B6

Item No.	Capacity	Facilities Description & Location	Quantity	Unit	Unit Cost ($)	Cost ($)
1	119 AF	Detention Basin Excavation	192,000	CY	$3.00	$576,000
		at Grand Canal & 53rd Ave.				
		Channel Excavation	33,000	CY	$3.00	$99,000
		Concrete Channel Paving (6" thk)	5,600	CY	$280.00	$1,568,000
		72" RGRCP	11,000	LF	$160.00	$1,760,000
		Demolition	77	EA	$5,000.00	$385,000
		Fencing & Screening	4,600	LF	$26.00	$119,600

Subtotal	$4,507,600
Engineering & Contingencies @ 40%	$1,803,040
Land Acquisition	$7,421,000
Surveying & Other Acquisition Costs @ 20%	$1,484,200
TOTAL PROJECT BUDGET	$15,215,840

Note: These cost estimates have been developed as a part of a preliminary submittal dated 9/29/95 Estimates are provided for the purposes of comparison only and are not intended to reflect an engineering estimate of the final construction cost. All costs are based upon a 1995 datum.

29-Sep-95 Q:\950024\HYDRO\LOTUS\ALTB7

MARYVALE FLOODING MITIGATION PROJECT
ALTERNATIVE B7

Item No.	Capacity	Facilities Description & Location	Quantity	Unit	Unit Cost ($)	Cost ($)
	157 AF	Detention Basin Excavation	253,000	CY	$3.00	$759,000
		30" RGRCP	5,000	LF	$75.00	$375,000
		54" RGRCP	3,000	LF	$125.00	$375,000
		66" RGRCP	500	LF	$140.00	$70,000
		72" RGRCP	800	LF	$160.00	$128,000
		78" RGRCP	3,000	LF	$215.00	$645,000
		84" RGRCP	500	LF	$255.00	$127,500
		90" RGRCP	800	LF	$285.00	$228,000
		11' RGRCP	2,000	LF	$345.00	$690,000
		12' RGRCP	3,000	LF	$365.00	$1,095,000
		3-10'x8' CBC	2,500	LF	$985.60	$2,464,000
		4-9'x8' CBC	3,500	LF	$1,131.60	$3,960,600
		Fencing & Screening	4,400	LF	$26.00	$114,400
		Subtotal				$11,031,500
		Engineering & Contingencies @ 40%				$4,412,600
		Land Acquisition				$3,232,500
		Surveying & Other Acquisition Costs @ 20%				$646,500
		TOTAL PROJECT BUDGET				**$19,323,100**

Note: These cost estimates have been developed as a part of a preliminary submittal dated 9/29/95 Estimates are provided for the purposes of comparison only and are not intended to reflect an engineering estimate of the final construction cost. All costs are based upon a 1995 datum.

12-Oct-95 Q:\950024\HYDRO\LOTUS\ALTB8

MARYVALE FLOODING MITIGATION PROJECT
ALTERNATIVE B-8

Item No.	Capacity	Facilities Description & Location	Quantity	Unit	Unit Cost ($)	Cost ($)
	160 AF	Detention Basin Along Grand Canal	258,000	CY	$3.00	$774,000
		Demolition	170	EA	$5,000.00	$850,000
		Landscape Restoration	12	AC	$40,000.00	$480,000
		72" RGRCP Storm Drain Outfall	500	LF	$175.00	$87,500

Subtotal	$2,191,500
Engineering & Contingencies @ 40%	$876,600
Land Acquisition	$10,255,000
Surveying & Other Acquisition Costs @ 20%	$2,051,000
TOTAL PROJECT BUDGET	$15,374,100

Note: These cost estimates have been developed as a part of a preliminary submittal dated 9/29/95 Estimates are provided for the purposes of comparison only and are not intended to reflect an engineering estimate of the final construction cost. All costs are based upon a 1995 datum.

29-Sep-95 Q:\950024\HYDRO\LOTUS\ALTXA

MARYVALE FLOODING MITIGATION PROJECT
ALTERNATIVE B-9

Item No.	Capacity	Facilities Description & Location	Quantity	Unit	Unit Cost ($)	Cost ($)
	350 AF	Detention Basin Excavation	565,000	CY	$3.00	$1,695,000
		72" RGRCP	500	LF	$175.00	$87,500
		Fencing & Screening	6,300	LF	$26.00	$163,800

Subtotal	$1,946,300
Engineering & Contingencies @ 40%	$778,520
Land Acquisition	$3,970,000
Surveying & Other Acquisition Costs @ 20%	$794,000
TOTAL PROJECT BUDGET	**$7,488,820**

Note: These cost estimates have been developed as a part of a preliminary submittal dated 9/29/95 Estimates are provided for the purposes of comparison only and are not intended to reflect an engineering estimate of the final construction cost. All costs are based upon a 1995 datum.

29-Sep-95 Q:\950024\HYDRO\LOTUS\ALTXA

MARYVALE FLOODING MITIGATION PROJECT
ALTERNATIVE B-10

Item No.	Capacity	Facilities Description & Location	Quantity	Unit	Unit Cost ($)	Cost ($)
	157 AF	Detention Basin in Maryview Park	253,000	CY	$3.00	$759,000
		Channel Excavation	22,000	CY	$3.00	$66,000
		4-10'x8' CBC	2,600	LF	$986.00	$2,563,600
		Concrete B.P. (6" thick)	3,800	CY	$280.00	$1,064,000
		Demolition	39	EA	$5,000.00	$195,000
		Park Restoration	40	AC	$80,000.00	$3,200,000

Subtotal	$7,847,600
Engineering & Contingencies @ 40%	$3,139,040
Land Acquisition	$2,094,000
Surveying & Other Acquisition Costs @ 20%	$418,800
TOTAL PROJECT BUDGET	$13,499,440

Note: These cost estimates have been developed as a part of a preliminary submittal dated 9/29/95 Estimates are provided for the purposes of comparison only and are not intended to reflect an engineering estimate of the final construction cost. All costs are based upon a 1995 datum.

CVL

COE & VAN LOO
CONSULTING ENGINEERS INC.
ENGINEERING • PLANNING

Job No. _____

Sheet No. _____ of _____

Calculated by DWRL Date 10/24

Checked by _____ Date _____

Scale _____

YAKIMA FLOOD MITIGATION PROJECT

[illegible]

Corrugated S.D. has 54" dia. @ S = [illegible]

Capacity = $K\sqrt{S}$ = 356 $\sqrt{[illegible]}$ = 149 cfs

Say 150 cfs.

[illegible] 150 [illegible], 50 [illegible]

[illegible] $150 \times \frac{[illegible]}{[illegible]}$ = 74 A.F.

Assume Excavation of 74 A.F. + 20% = 89 A.F.

= 144,000 C.Y.

Assume 8' depth ⇒ Basin ~ 630 × 630 + 10%

700' × 700'

Oct 25, 1995

Alternative A-6R

Clarendon Storm drain
west of 63rd Ave
east of 63rd Ave

63rd Ave. Storm drain

Vacant property area 0.25in x 0.25in @ 1" = 1200'
8' deep 3:1 Side Slopes (600-48)(300-48) =
189,104 FT² x 8FT = 1,112,832 CF = 41,216 CY 47,616 CY
115,200 FT³ + 57,600 FT³ = 172,800 FT³ = 6,400 CY

Park or adjacent field 0.9in x 1.0in @ 1" = 1200'
5' deep 3:1 Side Slopes 1,080 FT x 1200 FT
(1,080 - 30) x (1200 - 30) = 1,223,500 FT² x 5 FT =
= 227,500 CY

81,000 FT³ + 90,000 FT³ = 171,000 FT³ = 6,333 CY
TOTAL = 404,300 CY

DE & VAN LOO
PLANNING • ENGINEERING
LANDSCAPE ARCHITECTURE

Project: MNFMF
Project No. [illegible]
Sheet No. _____ of _____
Calculated by CEW Date 10/25/95
Checked by _____ Date _____

ALT A-GR

60" RCRCF @ S= 0.2% n= 0.015

$Q = \frac{1.49}{n} A R^{2/3} S^{1/2}$ $A_{60} = 19.63 FT^2$ P= 15.71 FT

$R = \frac{A}{P} = 1.25$

$Q = \frac{1.49}{0.015}(19.63)(1.25)^{2/3}(0.002)^{1/2}$

Q= 100 cfs GRED → STORE 81,000 CY

∴ VACANT PROPERTY IS TOO SMALL TO STORE ALL OF IT
So USE 36" OUTFALL PIPE
L= 600 FT X 300 FT 8 FT DEEP 3:1 SIDE SLOPES

V= (600-48)(300-48)8+(600+300)(8)(24) =
V= 47,600 CY MAX

ALTERNATIVE IS DETENTION BASIN IN FIELD OR PARK
W/ 5 FT DEPTH, 3:1 SIDE SLOPES, SAY 90,000 CY

FOR SMALL BASIN, USE 36" OUTFALL (L= 1.75 MI)
IN GSRD AVE, USE 60", L= 0.1 MI

FOR PARK BASIN
GSRD AVE USE 60" L= 1.25 MI
OUTFALL 24", L= 1.25 MI

CLARENDON S.D. 60" L= 0.75 MI

4550 NORTH 12TH STREET • PHOENIX, ARIZONA 85014 • PHONE (602) 264-6831

E & VAN LOO
PL NING • ENGINEERING
LANDSCAPE ARCHITECTURE

Project: MIFNE
Project No. [illegible]
Sheet No. _____ of _____
Calculated by: CEW Date: 10/25/[illegible]
Checked by _____ Date _____

36" RGRCP @ S = 0.2% n = 0.015

A = 7.1 FT² P = [illegible] R = 0.75

$$Q_{36} = \frac{1.49}{n} A R^{2/3} S^{1/2}$$

$$= \frac{1.49}{0.015} (7.1)(0.75)^{2/3} (0.002)^{1/2}$$

Q_{36} = 26 CFS

IN 6 HRS DRAINS 21,000 CY OR ABOUT 1/2 THE BASIN VOLUME

24" RGRCP @ S = 0.2% n = 0.015

A = 3.1 FT² P = 6.3 FT R = 0.5

$$Q_{24} = \frac{1.49}{0.015} (3.1)(0.5)^{2/3} (0.002)^{1/2}$$

Q_{24} = 9 CFS

IN 6 HRS, DRAINS 7,200 CY

4550 NORTH 12TH STREET • PHOENIX, ARIZONA 85014 • PHONE (602) 264-6831

DE & VAN LOO
PLANNING • ENGINEERING
LANDSCAPE ARCHITECTURE

Project: MNFWD

Project No. 95-0024-01

Sheet No. _____ of _____

Calculated by CEJ Date 10/25/95

Checked by _____ Date _____

ALT A-5R

HOLLEC TO 304 + RELOCATE - 3.5

BASIN 1,200 FT X 250 FT = 7.7 AC 5 FT DEEP 3:1 SIDES

VOL = (1,200 - 30) (5) (230 - 30) + (1,200 + 30) (5)(5) = 1,578,500 FT³ = 58,500 CY

DE & VAN LOO
PLANNING • ENGINEERING
LANDSCAPE ARCHITECTURE

Project [illegible]

Project No. [illegible]

Sheet No. _____ of _____

Calculated by CEW Date 10/25/95

Checked by _____ Date _____

"KNUCKLE" THAT GETS FLOODED @ 35TH AVE & WINTON AVE

1500 LF 24" RCP FROM WINTON AVE TO CHANNEL

REGRADE CHANNEL @ CENTRAL HIGH SCHOOL

60' RCP FROM HW TO BASIN

1250 LF CHANNEL IMPROVEMENTS

4550 NORTH 12TH STREET • PHOENIX, ARIZONA 85014 • PHONE (602) 264-6831

FORM 114

DE & VAN LOO
PLANNING • ENGINEERING
LANDSCAPE ARCHITECTURE

Project: MNEHP
Project No. 95-0024-01
Sheet No. _____ of _____
Calculated by CEW Date 10/25/95
Checked by _____ Date _____

ALT. A-4R

EXIST. S.D. IN INDIAN SCHOOL, 30" RCP @ S = 0.2%

$Q_{30} = \frac{1.49}{n} A R^{2/3} S^{1/2}$

n = 0.015
A = 4.9 FT² P = 7.9 FT R = 0.62

$Q_{30} = \frac{1.49}{0.015}(4.9)(0.62)^{2/3}(0.002)^{1/2}$

$Q_{30} = 16$ cfs

EXIST. S.D. IN 59TH AVE, 72" RGRCP @ S = 0.317%

$Q_{72} = \frac{1.49}{n} A R^{2/3} S^{1/2}$

n = 0.015
A = 28.3 FT² P = 15.5 FT
R = 1.51

$Q_{72} = \frac{1.49}{0.015}(28.5)(1.51)^{2/3}(0.00317)^{1/2}$

$Q_{72} = 209$ cfs

GOLF COURSE 900 FT X 550 FT + 750 FT X 550 FT +
400 FT X 450 FT + 650 LF TRENCH X 40 FT = 22 AC

25-Oct-95 Q:\950024\HYDRO\LOTUS\ALTXA

MARYVALE FLOODING MITIGATION PROJECT
ALTERNATIVE ~~X~~ B4R #2

Item No.	Capacity	Facilities Description & Location	Quantity	Unit	Unit Cost ($)	Cost ($)
		42 RGRCD S.D. IN	[illegible]	LF	$115.00	810,500
		CRITTENDEN				
		24" RCP [illegible] IN [illegible]	[illegible]	LF	$125.00	[illegible]
		ALE				

Subtotal	$ 1,465,500	~~$0~~
Engineering & Contingencies @ 40%	$ 586,300	~~$0~~
Land Acquisition		
Surveying & Other Acquisition Costs @ 20%		0
TOTAL PROJECT BUDGET	$2,051,700	**$0**

Note: These cost estimates have been developed as a part of a preliminary submittal dated 9/29/95 Estimates are provided for the purposes of comparison only and are not intended to reflect an engineering estimate of the final construction cost. All costs are based upon a 1995 datum.

Coe & Van Loo Consultants, Inc.

11/10/95

25-Oct-95 Q:\950024\HYDRO\LOTUS\ALTXA

MARYVALE FLOODING MITIGATION PROJECT
ALTERNATIVE ~~X~~ ASR #2

Item No.	Capacity	Facilities Description & Location	Quantity	Unit	Unit Cost ($)	Cost ($)
		36" RCP CULVERT TO	500	LF	90.00	45,000
		BASIN				
		DETENTION BASIN	48,000	CY	3.00	144,000
	40 AF	EXCAVATION 15' DEEP				
		3:1 SIDE SLOPES				
		REVEGETATION	8	AC	40,000	320,000
	.37	STRUCTURE DEMOLITION	.37	EA	6,000	222,000
		24" RCP OUTLET TO	450	LF	60.00	27,000
		CULVERT AVE.				

Subtotal	$758,000	$0
Engineering & Contingencies @ 40%	+ 303,200	$0
Land Acquisition	$ 1,775,100	0
Surveying & Other Acquisition Costs @ 20%	$ 355,020	$0
TOTAL PROJECT BUDGET	$ 3,191,320	

Note: These cost estimates have been developed as a part of a preliminary submittal dated 9/29/95 Estimates are provided for the purposes of comparison only and are not intended to reflect an engineering estimate of the final construction cost. All costs are based upon a 1995 datum.

Coe & Van Loo Consultants, Inc.

DE & VAN LOO
PLANNING • ENGINEERING
LANDSCAPE ARCHITECTURE

Project: HWFMP
Project No. 95-[illegible]-01
Sheet No. _____ of _____
Calculated by: CEW Date _____
Checked by _____ Date _____

LAND ACQUISITION FOR VACANT PARCEL

55.54 AC @ $2,[illegible] W/O 30% FACTOR

600 FT x 300 FT PARCEL = 4.1 AC

$$\frac{4.1\ AC}{55.54\ AC} = \frac{X}{\$2,585,955}$$

X = $190,897 ∴ FULL CASH VALUE = $233,[illegible]

4550 NORTH 12TH STREET • PHOENIX, ARIZONA 85014 • PHONE (602) 264-6831

DE & VAN LOO
PLANNING • ENGINEERING
LANDSCAPE ARCHITECTURE

Project MUFMP

Project No. 95-0024

Sheet No. _____ of _____

Calculated by CEW Date 11/13/95

Checked by _____ Date _____

GRANE / INDIAN SCHOOL BASIN
1170 FT LONG X 220 FT LONG

BASIN IS 5 FT DEEP W/ 3:1 SIDE SLOPES

1170 FT X 220 FT X 5 FT = 43,000 CY

4 [1/2 (5)(15')] = 150 FT² = 6 CY

FORM 14

25-Oct-95 Q:\950024\HYDRO\LOTUS\ALTXA

MARYVALE FLOODING MITIGATION PROJECT
ALTERNATIVE ~~X~~ A-4R

Item No.	Capacity	Facilities Description & Location	Quantity	Unit	Unit Cost ($)	Cost ($)
	100cfs	60" RGRCP IN CLASS [illegible] S=0.2%	4000	LF	$133.[illegible]	532,000
	9 cfs	24" RGRCP OUTFALL FROM GOLF COURSE TO E. ST INDIAN SCHOOL RD. [illegible]	650	LF	$60.00	39,000
		GOLF COURSE GRADING & REVEGETATION	23	AC	$[illegible]	1,340,000

Subtotal	$2,411,000	$0
Engineering & Contingencies @ 40%	964,400	$0
Land Acquisition		
Surveying & Other Acquisition Costs @ 20%	$	0
TOTAL PROJECT BUDGET	$3,375,400	**$0**

Note: These cost estimates have been developed as a part of a preliminary submittal dated 9/29/95 Estimates are provided for the purposes of comparison only and are not intended to reflect an engineering estimate of the final construction cost. All costs are based upon a 1995 datum.

MARYVALE FLOODING MITIGATION PROJECT
ALTERNATIVE ~~X~~ A-5R

Item No.	Capacity	Facilities Description & Location	Quantity	Unit	Unit Cost ($)	Cost ($)
		DETENTION BASIN	58,000	CY	$3.00	174,000
	100cfs	60 RGRCP	2,600	LF	$133.00	345,800
		CLARENDON AVE TO				
		BASIN S-0.2				
	9cfs	24" RGRCP OUTFALL TO	2500	LF	$60.00	150,000
		59TH AVE VIA CLARENDON				
	36	HOUSE DEMOLITION	36	EA	$5,000	180,000
		REVEGETATION	8	Ac	$40,000	320,000
		Subtotal			$1,169,800	$0
		Engineering & Contingencies @ 40%			467,920	$0
		Land Acquisition			$1,775,100	
		Surveying & Other Acquisition Costs @ 20%			355,020	0
		TOTAL PROJECT BUDGET			$3,767,840	**$0**

Note: These cost estimates have been developed as a part of a preliminary submittal dated 9/29/95 Estimates are provided for the purposes of comparison only and are not intended to reflect an engineering estimate of the final construction cost. All costs are based upon a 1995 datum.

MARYVALE FLOODING MITIGATION PROJECT
ALTERNATIVE X B-4R

Item No.	Capacity	Facilities Description & Location	Quantity	Unit	Unit Cost ($)	Cost ($)
	150CFS	54" S.D. [illegible]	≈20	LF	125.00	[illegible]

Subtotal	$0
Engineering & Contingencies @ 40%	$0
Land Acquisition	
Surveying & Other Acquisition Costs @ 20%	0
TOTAL PROJECT BUDGET	**$0**

Note: These cost estimates have been developed as a part of a preliminary submittal dated 9/29/95 Estimates are provided for the purposes of comparison only and are not intended to reflect an engineering estimate of the final construction cost. All costs are based upon a 1995 datum.

MARYVALE FLOODING MITIGATION PROJECT

ALTERNATIVE ~~3~~ A-GE

USING BASIN IN THE PARK

Item No.	Capacity	Facilities Description & Location	Quantity	Unit	Unit Cost ($)	Cost ($)
	100cfs	60" RGRCP IN CLARENDON S=0.2%	4000	LF	$133.00	532,000
	100cfs	60" RGRCP IN FREEDOM AVE S=0.2%	6600	LF	$133.00	877,800
		5' DEEP DETENTION BASIN W/3:1 SIDES IN DELBERT WEST PARK	90,000	CY	$3.00	270,000
	9cfs	24" RGRCP OUTFALL IN GOLF VIEW CHANNEL, S=0.2%	6600	LF	$60.00	396,000
		PERIMETER FENCING	4000	LF	$26.00	104,000

Subtotal	$2,179,800	$0
Engineering & Contingencies @ 40%	871,920	$0
Land Acquisition		
Surveying & Other Acquisition Costs @ 20%		0
TOTAL PROJECT BUDGET	$3,051,720	**$0**

ASSUMING LAND ACQUISITION COSTS = $0

Note: These cost estimates have been developed as a part of a preliminary submittal dated 9/29/95 Estimates are provided for the purposes of comparison only and are not intended to reflect an engineering estimate of the final construction cost. All costs are based upon a 1995 datum.

MARYVALE FLOODING MITIGATION PROJECT
ALTERNATIVE ~~X~~ A-6R
USING SMALL BASIN ADJACENT TO GRAND CANAL

Item No.	Capacity	Facilities Description & Location	Quantity	Unit	Unit Cost ($)	Cost ($)
	100cfs	60" RCCP IN [illegible] S=0.2%	4000	LF	$133.00	532,000
	100cfs	60" RCCP IN 63RD AVE S=0.2%	550	LF	$133.00	73,150
		8' DEEP DETENTION BASIN W/3:1 SIDES IN VACANT LOT	47,600	CY	$3.00	142,800
	26cfs	36" RCCP OUTFALL IN 63RD AVE TO I-10 CHANNEL, S=0.2%	9,300	LF	$90.00	837,000
		PERIMETER FENCING	1,800	LF	$26.00	46,800

Subtotal	$ 1,631,750	$0
Engineering & Contingencies @ 40%	652,700	$0
Land Acquisition		
Surveying & Other Acquisition Costs @ 20%	238,620	0
	47,724	
TOTAL PROJECT BUDGET	$ 2,570,794	**$0**

Note: These cost estimates have been developed as a part of a preliminary submittal dated 9/29/95 Estimates are provided for the purposes of comparison only and are not intended to reflect an engineering estimate of the final construction cost. All costs are based upon a 1995 datum.

MARYVALE FLOODING MITIGATION PROJECT
ALTERNATIVE ~~X~~ 3-6R

Item No.	Capacity	Facilities Description & Location	Quantity	Unit	Unit Cost ($)	Cost ($)
	33.54 AC	Parcel Acquisition				
	74 AF.	Basin - Excavation	166,000	C.Y.	3.00	498,000
		24" RGRCP	1,000		55.00	
		72" RGRCP	1,000		160.00	
		Fencing + Screening	2,800	LF	26.00	

Subtotal	$0
Engineering & Contingencies @ 40%	$0
Land Acquisition 3,232,448	
Surveying & Other Acquisition Costs @ 20%	0
TOTAL PROJECT BUDGET	**$0**

Note: These cost estimates have been developed as a part of a preliminary submittal dated 9/29/95 Estimates are provided for the purposes of comparison only and are not intended to reflect an engineering estimate of the final construction cost. All costs are based upon a 1995 datum.

MARYVALE FLOODING MITIGATION PROJECT
ALTERNATIVE X
KNUCKLE AT 56TH AVE & WHITTON AVE

Item No.	Capacity	Facilities Description & Location	Quantity	Unit	Unit Cost ($)	Cost ($)
		54" RCRCP; CULDESAC TO CHANNEL	150	LF	125.00	18,750
		60" RCRCP; HWY 55TH TO NEW BASIN	1000	LF	133.00	133,000
		~~ASSUME COP WILL REGRADE CHANNEL~~				
		[illegible]	1	LS	20,000	
		[illegible] 6000 CY	6000	CY	5.00	

Subtotal	151,750	$0
Engineering & Contingencies @ 40%	60,700	$0
Land Acquisition		
Surveying & Other Acquisition Costs @ 20%	∅	0
TOTAL PROJECT BUDGET	212,450	**$0**

OR BUY ONE LOT AND ALLOW DRAINAGE TO FREELY ENTER EXIST. DRAINAGE CHANNEL

Note: These cost estimates have been developed as a part of a preliminary submittal dated 9/29/95 Estimates are provided for the purposes of comparison only and are not intended to reflect an engineering estimate of the final construction cost. All costs are based upon a 1995 datum.

E & VAN LOO
PL NING • ENGINEERING
LANDSCAPE ARCHITECTURE

DETENTION BASIN
NDIAN SCHOOL/SUNRISE

Project [illegible]

Project No. [illegible]

Sheet No. _____ of _____

Calculated by _____ Date [illegible]

Checked by _____ Date _____

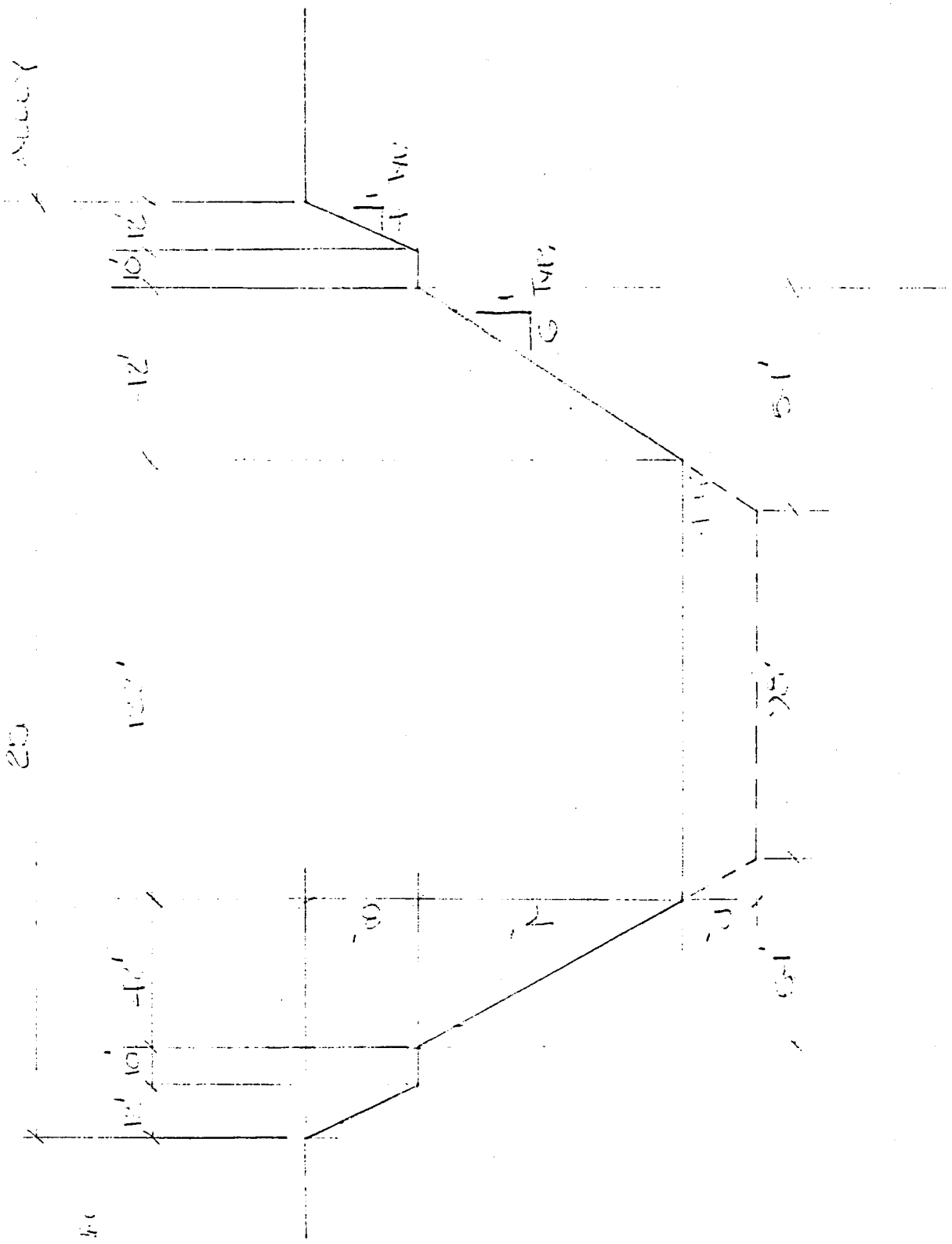

4550 NORTH 12TH STREET • PHOENIX, ARIZONA 85014 • PHONE (602) 264-6831

FORM [illegible]

12/6/95

STORM DRAIN IN CRITTENDEN

54" S = 0.00456

n = 0.012 K = 2136 cfs Q = 147 cfs

if n = 0.015 $Q = \frac{1.49}{n} A R^{2/3} S^{1/2}$

Q = 119 cfs

A = 15.9 FT²

$R = \frac{A}{P} = \frac{15.9}{14.1} = 1.13$

SAY 180 cfs

STORM DRAIN IN 31ST AVE

72" @ S = 0.00737

A = 28.3 FT² P = 18.5 FT

n = 0.012 K = 4661 Q = 395 cfs

n = 0.015 Q = 317 cfs

72" @ S = 0.00737 (n = 0.015)

Q = 220 cfs

(n = 0.012) Q = 276 cfs

E & VAN LOO
PL NING • ENGINEERING
LANDSCAPE ARCHITECTURE

Project [illegible]
Project No. 95-0024-01
Sheet No. _____ of _____
Calculated by [illegible] Date 12/21/95
Checked by _____ Date _____

Q = 500 cfs DIRT CHANNEL; n = 0.022
S = 0.0025

$Q = \frac{1.49}{n} A R^{2/3} S^{1/2}$

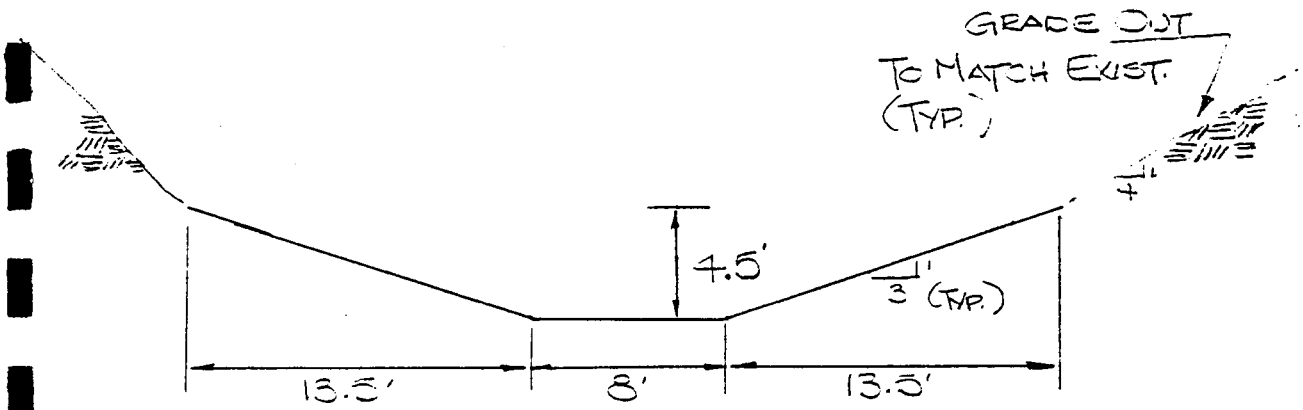

SECTION B-B

d = 4' A = 80 FT² P = 33.30 FT R = 2.40 TW = 32'
Q = 490 cfs

d = 4.5 FT TW = 35 FT A = 96.75 FT² P = 36.46 FT R = 2.65
Q = 600 cfs

CHANNEL 4' + 3.5' FROM SLOPE = 7.5'

IF CHANNEL IS CONCRETE: d = 3 FT n = 0.015

A =

VL
E & VAN LOO
PLANNING • ENGINEERING
LANDSCAPE ARCHITECTURE

Project MARYVALE

Project No. 95-0024-01

Sheet No. _____ of _____

Calculated by CEW Date _____

Checked by _____ Date _____

Q = 400 cfs

S = 0.5%

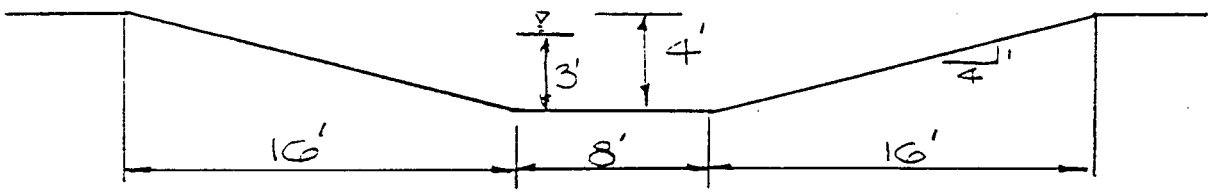

A = 96 FT^2 P = 40.95 FT R = 2.34

$$Q = \frac{1.49}{0.022}(96)(2.34)^{2/3}(0.005)^{1/2}$$

Q = 800 cfs

$\Rightarrow$ d = 3' A = 60 FT^2 P = 32.74 FT R = 1.83

Q = 430 cfs

d = 2½' A = 45 FT^2 P = 28.61 FT R = 1.57

Q = 290 cfs

TRAPEZOIDAL CHANNEL ANALYSIS
NORMAL DEPTH COMPUTATION

December 27, 1995
Maryvale Flooding Mitigation
Area C Drainage Channel

==========

PROGRAM INPUT DATA:

DESCRIPTION	VALUE
Flow Rate (cubic feet per second).....	380.0
Channel Bottom Slope (feet per foot).....	0.0020
Manning's Roughness Coefficient (n-value).....	0.0150
Channel Side Slope - Left Side (horizontal/vertical)....	2.00
Channel Side Slope - Right Side (horizontal/vertical)...	2.00
Channel Bottom Width (feet).....	8.0

==========

PROGRAM RESULTS:

DESCRIPTION	VALUE
Normal Depth (feet).....	3.43
Flow Velocity (feet per second).....	7.46
Froude Number (Flow is Sub-Critical).....	0.858
Velocity Head (feet).....	0.86
Energy Head (feet).....	4.29
Cross-Sectional Area of Flow (square feet).....	50.96
Top Width of Flow (feet).....	21.72

==========

TRAPEZOIDAL CHANNEL ANALYSIS COMPUTER PROGRAM, Version 1.3 (c) 1986
Dodson & Associates, Inc., 7015 W. Tidwell, #107, Houston, TX 77092
(713) 895-8322. A manual with equations & flow chart is available.

E & VAN LOO
PL NING • ENGINEERING
LANDSCAPE ARCHITECTURE

Project MJFMP
Project No. 95-0034-01
Sheet No. _____ of _____
Calculated by CEW Date 12/28/95
Checked by _____ Date _____

WHITTON AVE CHANNEL @ UPSTREAM END OF RCBC:

FL = 92.06 Q = 380± cfs (367 PER HEC-1)
TOB = 98.50 d_N = 3.43 FT

USING CHART 8 FROM HDS 5

TRY 1- 4'x10' CBC

$\frac{Q}{B}$ = 38 cfs/FT ∴ $\frac{HW}{D}$ = 1.8 ∴ HW = 7.2 FT

TRY 1- 5'x10' CBC

$\frac{Q}{B}$ = 38 cfs/FT ∴ $\frac{HW}{D}$ = 1.21 ∴ HW = 6.0 FT OK

WHITTON AVE
RCBC
12/28/95
CEW

CHART 8

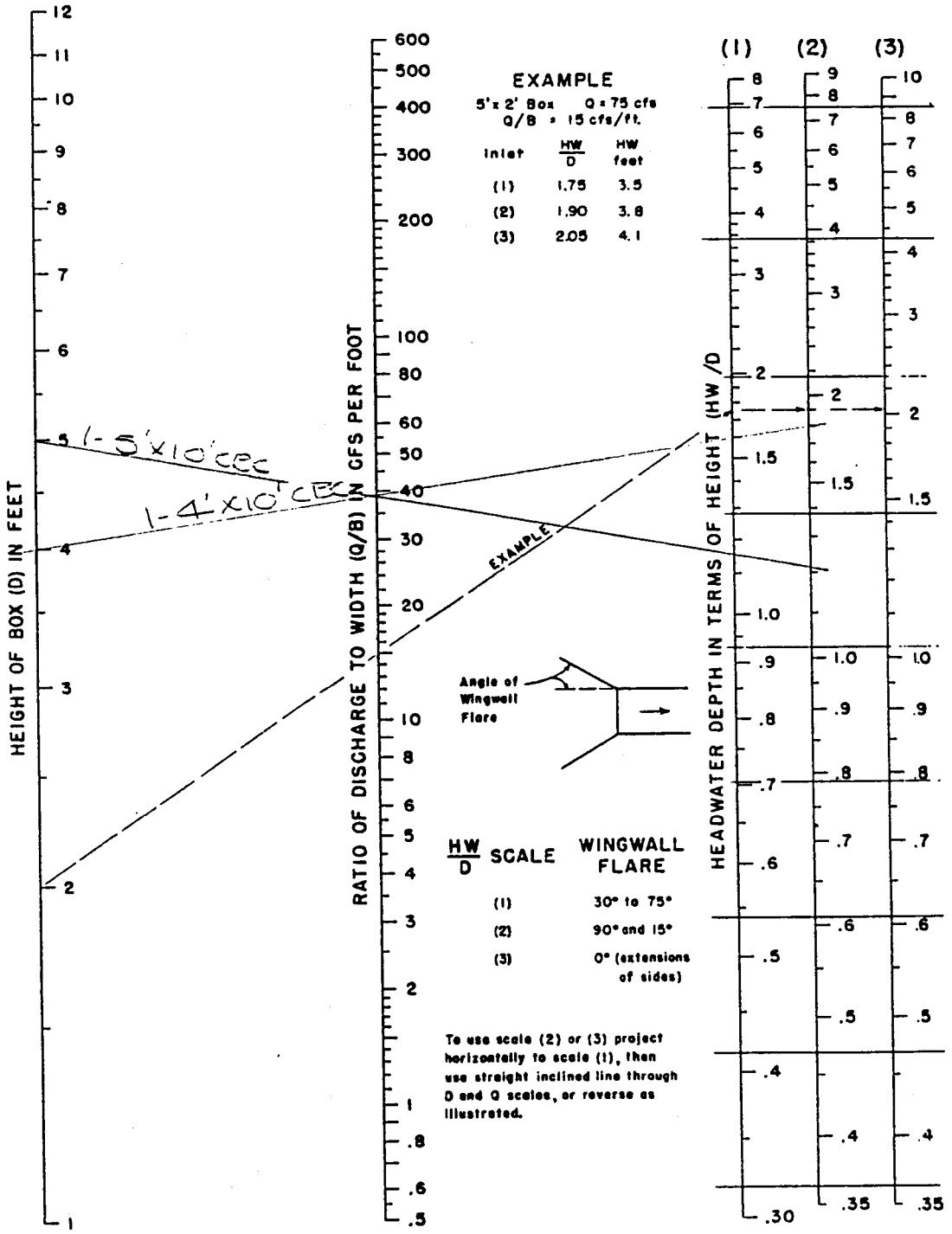

HEADWATER DEPTH FOR BOX CULVERTS WITH INLET CONTROL

BUREAU OF PUBLIC ROADS JAN. 1963

DE & VAN LOO
PLANNING • ENGINEERING
LANDSCAPE ARCHITECTURE

Project MARYVALE FMP
Project No. 95-0024-01
Sheet No. _____ of _____
Calculated by CEW Date 1/2/96
Checked by _____ Date _____

AREA A

ITEM	QUANTITY	UNIT	UNIT COST	TOTAL
SH-A1 BASIN EXCAVATION	42,800	CY	$3	$128,400
30" RGRCP	190	LF	$75	$14,250
U-TYPE HEADWALL W/FLAPGATE	1	EA	$3,000	$3,000
CONCRETE SPILLWAYS	150	CY	$250	$37,500
J-TYPE HEADWALL 36"	1	EA	$2,500	$2,500
RIP-RAP, D_{50} MIN = 12", T = 2FT	120	CY	$~~100~~ 45	$~~12,000~~ 5,400
DEMOLISH HOUSES	36	EA	$5,000	$180,000
SHT A2				
3' RGRCP	500	LF	$90	$45,000
MANHOLE	2	EA	$2,000	$4,000
REM. MANHOLE & S.D.	1	LS	$500	$500
CATCH BASIN	5	EA	$1,800	$~~7,500~~ 9,000
LANDSCAPING	1	LS	$1,000,000	$1,000,000
MISCELLANEOUS [illegible]	1	LS	10,000	10,000
PROPERTY ACQUIS	1	LS	$1,775,000	$1,775,000

FORM 114

E & VAN LOO
PL NING • ENGINEERING
LANDSCAPE ARCHITECTURE

29 CB
Sht: E2-E4

Project MARANA FMP
Project No. 96-0024-01
Sheet No. _____ of _____
Calculated by CEW Date 1/2/96
Checked by _____ Date _____

AREA B

ITEM	QUANTITY	UNIT	UNIT COST	TOTAL
B1				
PROPERTY ACQUISITION*	1	LS	$2,200,000	$2,200,000
BASIN EXCAVATION	484,000	CY	$3	$1,452,000
PERIMETER FENCING/SCREENING	4,970	LF	$26	$129,220
CONCRETE SPILLWAY	110	CY	$250	$27,500
ZONE 2 REPLACE EXIST. PAVEMENT	~~44,000~~	SF	~~$1.70~~	$74,800 ~~$[illegible]~~
SHT B2				
JUNCTION STRUCTURE	2	EA	~~$3,000~~	$12,000 ~~$6,000~~
72" RGRCP	~~500~~ 430	LF	$175	$182,000
54" RGRCP	~~540~~ 370			
TYPE HEADWALL (54")	1	EA	~~$2,500~~ 3,000	~~$2,500~~ 3,000
STRAIGHT HEADWALL (72")	1	EA	~~$2,000~~ 3,000	~~$2,000~~ 3,000
RIP RAP, D_{50} MIN = 12" = 2'	240	CY	~~$100~~ 45	~~$24,000~~ 10,800

4550 NORTH 12TH STREET • PHOENIX, ARIZONA 85014 • PHONE (602) 264-6831

FORM 114

* ASSUME 2/3 OF PARCEL 210A TO MATCH THE AREA SHOWN IN THE PLANS

VL
E & VAN LOO
PL NING • ENGINEERING
LANDSCAPE ARCHITECTURE

Project MARYVALE FMP
Project No. 95-0024-01
Sheet No. _____ of _____
Calculated by CEW Date 1/2/96
Checked by _____ Date _____

AREA B

SHTS B3 & B4

ITEM	QUANTITY	UNIT	UNIT COST	TOTAL
				52,200
CATCH BASIN	29	EA	$1,800	~~$43,500~~
Contingency @ 20%				
TRAFFIC CONTROL			$30,000	30,000

5' x 10' REC 1.182 CY CONCRETE / LF x $250 / CY = $295.50
165 lbs STEEL / LF x $400 / TON = 33
$328.50 / LF

70 LF x $328.50 / LF = $22,995

OE & VAN LOO
ANNING • ENGINEERING
LANDSCAPE ARCHITECTURE

Project MARVVALE FMP
Project No. 95-0024-01
Sheet No. _____ of _____
Calculated by CEW Date 1/2/96
Checked by _____ Date _____

AREA C

SHT C1

ITEM	QUANTITY	UNIT	UNIT COST	TOTAL
CHANNEL EXCAVATION	13,000	CY	3.00	
CONCRETE SPILLWAY	110	CY	$250	$27,500
2 LF, 10'x5' RCBC	1	LS	$23,000	$23,000
48" RGRCP	250	LF	$115	$28,750
CATCH BASIN	4	EA	$1,800	$10,800 ~~$6,000~~
TRAFFIC CONTROL	1	LS	10,000	10,000

Area B

1,700 CY x 0.51 = $870 11/2/96

FILL & COMPACT ~~GRADING~~

80 x 550 = 44,000 SF

12" STREET SECTION

SAY 8" ABC 44,000 FT² x ~~0.675~~ = ~~1100 CY~~ ~~550~~

4" AC 44,000 FT² x ~~0.33~~ ~~550 CY~~

4,900 SY x ~~$7.40~~ 8.30 = ~~$36,260~~

$40,670

8" ABC 4,900 SY x $6.50 = $31,850

870
40,670
31,850
$ 73,390

DE & VAN LOO
PLANNING • ENGINEERING
LANDSCAPE ARCHITECTURE

Project MVFMP

Project No. 95-0024-01

Sheet No. _____ of _____

Calculated by CEW Date 1/3/96

Checked by _____ Date _____

CONCRETE CHANNEL LINING

34.12 LF x 0.5' THICK x 2368.5 LF = 40,406.6 CF

= 1,500 CY

4550 NORTH 12TH STREET • PHOENIX, ARIZONA 85014 • PHONE (602) 264-6831