Design Data Report
Final Submittal

(VOLUME 4 – 87TH & 83RD PEDESTRIAN BRIDGE STRUCTURAL CALCULATIONS)

September 2002

Bethany Home/Grand Canal Flood Control Project

Bethany Home Outfall Channel, Phase II

Project No. 2001C053, PCN No. 620 03 32

Registered Professional Engineer (Civil)
Certificate No. 23984
MARK K GILLILAND
Date Signed 9/10/02
ARIZONA, U.S.A.

Prepared for:
Flood Control District of Maricopa County
2801 West Durango Street
Phoenix, Arizona 85009
Project No. 98-46

Prepared by:
DMJM+HARRIS
2777 East Camelback Road, Suite 200
Phoenix, Arizona 85016
Project No. 6888

Prepared in Cooperation with:
The City of Glendale
5850 West Glendale Avenue
Glendale, Arizona 85301

Prepared in Cooperation with:
The City of Phoenix
200 West Washington
Phoenix, Arizona 85003

DMJM HARRIS	PROJECT: BHOC 87TH AVE PED BRIDGE	JOB NO. 6888	SHEET 1 of 1
		DESIGNED BY SEQ	DATE AUG 02
SUBJECT: TABLE OF CONTENTS		CHECKED BY	DATE

DESCRIPTION OF CALCULATION	SHEET
SUPERSTRUCTURE LOADS	1
ANCHOR BOLTS / MIN SEAT REQUIREMENTS	2
BEARING PAD DESIGN	3 ~ 5
ABUTMENT CAP DESIGN	6 ~ 12
WINGWALL DESIGN	13 ~ 18
RETAINING WALL DESIGN	19 ~ 29
DRILLED SHAFT DESIGN	30 ~ 33
GEOMETRY	34 ~ 39
QUANTITIES	40 ~ 52

Registered Professional Engineer (Civil)
Certificate No
23984
MARK K.
GILLILAND
Date Signed 9/10/02
ARIZONA, U.S.A.

Property of
Flood Control District of MC Library
Please Return to
2801 W. Durango
Phoenix, AZ 85009

DMJM HARRIS	PROJECT: BHOC 87TH AVE PED. BRIDGE	JOB NO. 6888	SHEET 1 of 12
		DESIGNED BY SEO	DATE JUN 02
SUBJECT: SUPERSTRUCTURE DESIGN		CHECKED BY DRC.	DATE 6/02

LOADS FROM SUPERSTRUCTURE

I) LIVE LOADS

1. H10 :

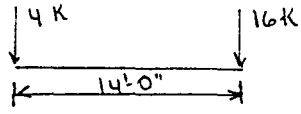

MAXIMUM AXLE LOAD PER ABUTMENT = 18.73 K

2. PEDESTRIAN LOAD:

BRIDGE LENGTH = 45.71 ft , ℄ BRG TO ℄ BRG = 43.88 ft

BRIDGE CLEAR WIDTH = 12 ft

A_1 = DECK INFLUENCE AREA = (45.71 ft)(12 ft) = 549 SF > 400 SF

$w = 85(0.25 + (15/\sqrt{549})) = 75.7$ psf < 65 psf. OK.

USE 75.7 psf

TOTAL LIVE LOAD PER ABUTMENT = (75.7 psf)(549 SF)/2 = 20.8 KIPS (CONTROLS)

3. VEHICLE LOAD WILL NOT CONTROL.

MAXIMUM LIVE LOAD REACTION PER ABUTMENT = 20.8 KIPS

II) DEAD LOAD

1. MAXIMUM TRUSS WEIGHT INCLUDING METAL DECKING:
(INFORMATION OBTAINED FROM TRUSS SUPPLIERS)

(50 PSF)(45.71 ft)(12 ft) = 27.4 Kips

2. CONCRETE DECKING

ASSUME REINFORCED CONCRETE, w = 115 pcf (LIGHTWEIGHT CONCRETE)

FLOOR BEAM SPACING = 8 ft

ASSUMED CORRUGATED DEPTH = 2 1/2"

TOP CLEAR TO REINFORCING = 1 1/2"

BOTTOM CLEAR TO REINFORCING = 1"

#4 @ BOTH WAYS = 1"

(4 3/4" Avg + 1)(1/12)(12 ft)(45.7 ft)(0.115 K/ft³) = 25.0 Kips

DMJM HARRIS	PROJECT: B Hoc 87TH AVE PED BRIDGE	JOB NO. 6988	SHEET 2 of 12
		DESIGNED BY SEO	DATE JUN 03
SUBJECT: SUPERSTRUCTURE TO SUBSTRUCTURE CONNECT		CHECKED BY DPC.	DATE 6/02

AASHTO SECTION 10.29.6 ANCHOR BOLTS

SPANS 50 ft OR LESS: 2 bolts, 1"ϕ, SET 10" IN THE MASONRY.

ANCHORS SHALL BE SWEDGED OR THREADED.

CHECK 1"ϕ BOLTS FOR HORIZONTAL LOADS FROM SEISMIC SPC "A".

TOTAL LOAD = (0.2)(28.90 K)(1/2)(1/2) = 1.45 K/bolt.

1.45 K < Allowable Shear on 1"ϕ bolt ≈ 7.9 K. OK

AASHTO 5.3: MIN SEAT REQUIREMENTS

$N = (8 + (0.02)(L) + 0.03H)(1 + (0.000125)(S)^2)$

$N = (8 + (0.02)(45.71) + 0)(1 + (0.000125)(0))$

$N = (8 + 0.91 + 0)(1.0)$

$N \approx 9''$

$N_{provided} = 1' 9'' > 9''$ OK.

DMJM HARRIS	PROJECT: B HOC 87TH AVE PED BRIDGE	JOB NO. 6888	SHEET 3 of 12
		DESIGNED BY CEM	DATE JUN 02
SUBJECT: BEARING PAD DESIGN		CHECKED BY DFC	DATE 6/02

LOADS FROM SUPERSTRUCTURE

LL / PAD = 10.40 KIPS.

DL / PAD = 14.40 KIPS. (INCLUDES 10% ALLOWANCE)

DEFLECTIONS (FOR BRG PAD DESIGN)

- MAXIMUM PEDESTRIAN LL DEFLECTION (L/500) = (43.88' x 12") / 500 = 1.05 in
- MAXIMUM D.L. DEFLECTION (TREAT AS % OF LL DEFLECTION)

  [(1.1)(27.4 K + 25.0 K) / (20.8 K x 2)] (1.05 in) = 1.46 in
- MAXIMUM CHANGE IN ELEVATION = 0.31 ft

FRAME SHORTENING

- Coeff of Expansion = 0.0000065/°F

DMJM	PROJECT: BHOC 87th Ave Pedestrian Bridge	JOB NO. 6888.002	SHEET 4 OF 12
		DESIGNED BY: SEO	DATE 7-02
SUBJECT: BEARING PAD DESIGN - Abutments		CHECKED BY: RPC.	DATE 6/02

ELASTOMERIC BEARING PAD DESIGN - Method A (Reinforced with Steel)(AASHTO Section 14.6.6)

ABUTMENT NO 1 & 2

DESIGN CRITERIA

SHEAR MODULUS (G) = 130 PSI	C = 6.5 X 10-6
HARDNESS = 55 DURO	TEMP. RANGE = 70 DEG F
1/2 " ELASTOMERIC LAYERS	LONG TERM SHRINK. & CREEP = 1/2 " / 100 FT
14 GA STEEL LAMINATES	GIRDER LENGTH = 43.88 FT
ELASTOMER CREEP = 4%	SHRINKAGE LENGTH = 43.88 FT

DESIGN LOADS

P_{DL} = 14.4 KIPS
P_{LL} = 10.4 KIPS
P_{TL} = 24.8 KIPS

TRY A 8 x 8 BEARING PAD (A = 64 sq. in)

S = Plan Area / Area of Perimeter Free to Bulge
= 8 x 8 / 2 x 0.5 (8 + 8) = 4
σ_{LL} = 10.4 / 8 x 8 = 0.16 ksi
$\sigma_{TL} \leq$ 1.0 ksi
$\sigma_{TL} \leq$ 1.0 GS = 0.52 ksi
σ_{TL} = 14.4 + 10.4 / 8 x 8
= 0.39 ksi < 0.52 ksi ∴ **OK**

SHEAR DEFORMATION

R+S+T = 43.88 ft. x 70 deg F x 0.000006 + 43.88 ft. x 1/2 " / 100 ft = 0.24 in
ADDT'L FRAME Δ = 0 in
$\therefore \Delta_s$ = 0.24 in
$\therefore h_{rt}$ = 2 x 0.24 in = 0.48 in
t_p = 0.5 * 0.48 in / (0.5 in - 0.078 in) = 0.57 in **USE A 2" PAD**
$t_p \leq$ L / 3 = 2.7" & W / 3 = 2.7" ∴ **OK**

COMPRESSIVE DEFLECTION

$\delta_i = \Sigma \epsilon_i h_{ri}$ Where: ϵ_i = Compressive Strain Per Figure 14.6.5.3.3-1 = 3.9 %
h_{ri} = Thickness of Elastomeric Layer = 1/2"
δ_i = 2 in x 3.9 = 0.08 in
δ_f = 0.08 in x 1.30 = 0.1 in **< 1/8" OK**

ROTATION

θ_{Grade} = -0.31 ft / 43.88 ft = -0.0071 rads
$\theta_{Prestress}$ = 3.2 x 0 in / 43.88 ft = 0 rads
θ_{DL+LL} = 3.2 x -2.51 in / 43.88 ft = -0.0153 rads
θ_{const} = 0.005 rads
θ_m = 0.0273 rads
$\sigma_{TL} \geq 0.5GS\theta_m(L / h_{rt})^2$
0.5 x 130 psi x 4 x 0.0273 x (8" / 1.69")^2
0.16 ksi < 0.39 ksi ∴ **OK**

REINFORCEMENT

$h_s \geq 3.0h_{max}\sigma_{TL} / Fy$
3.0 * 0.5 * 0.39 / 36 = 0.016 in
$h_s \geq 2.0h_{max}\sigma_{LL} / Fsr$
2.0 * 0.5 * 0.16 / 24 = 0.007 in
h_s = 0.078" ≮ 0.016" ∴ **OK**

ABUTMENT NO 1 & 2
USE A 8x8x2 BEARING PAD
DESIGN METHOD A
SHEAR MODULUS = 130 psi
DUROMETER HARDNESS = 55

Table 14.6.5.2-2 Low temperature zones and elastomer grades

Low Temperature Zone	A	B	C	D	E
50 year low temperature (°F)	0	−20	−30	−45	all others
Max. no. of days below 32°F	3	7	14	N/A	N/A
Low temp. elastomer grade without special provisions	0	2	3	4	5
Low temp. elastomer grade with special provisions	0	0	2	3	5

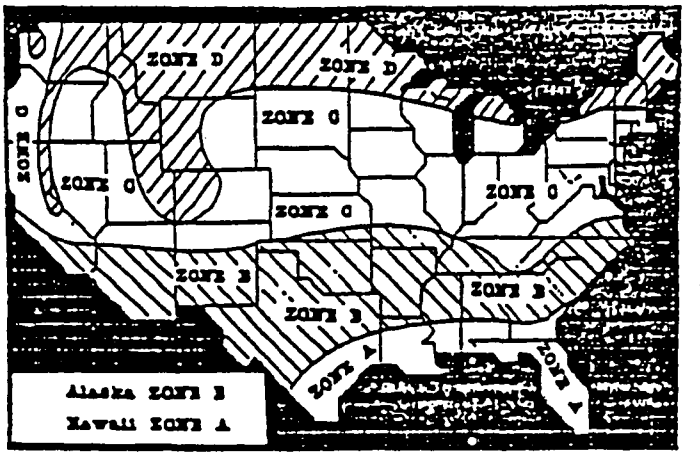

FIGURE 14.6.5.2-1 Map of Low Temperature Zones

Values for ϵ_i shall be determined from test results or by rational analysis. The effects of creep of the elastomer shall be added to the instantaneous deflection when considering long-term deflections. They should be computed from information relevant to the elastomeric compound used. In the absence of material-specific data, the values given in Article 14.6.5.2 shall be used. In the absence of information specific to the particular bearing to be used, Figure 14.6.5.3.3-1 may be used.

14.6.5.3.4 Shear

The horizontal movement of the bridge superstructure, Δ_0, shall be taken as the maximum possible displacement

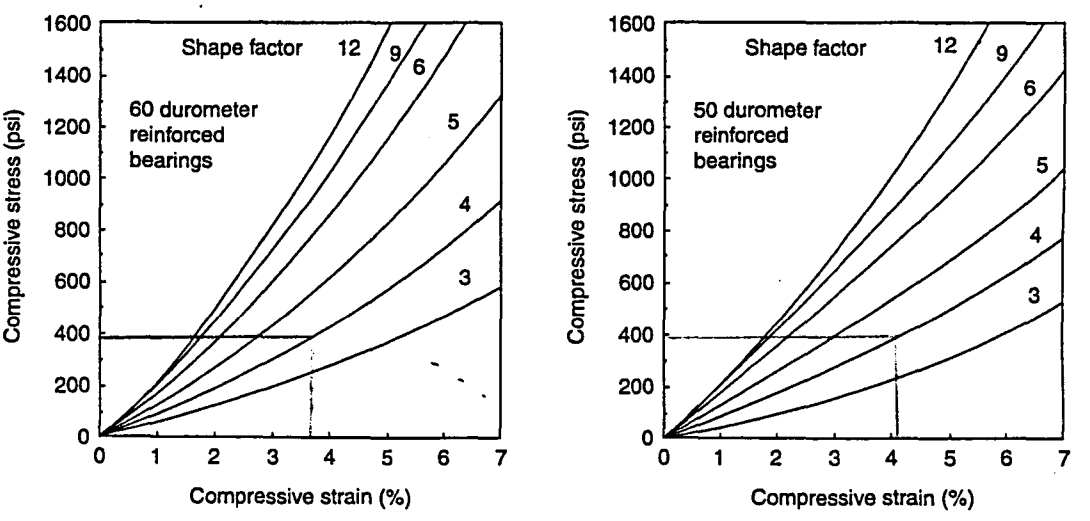

FIGURE 14.6.5.3.3-1 Load Deflection Behavior of Elastomeric Bearings

DMJM HARRIS	PROJECT: BHOC 87TH ~~83RD~~ PED BRIDGE	JOB NO. 6888	SHEET 6 of 12
		DESIGNED BY SED	DATE JUN 02
SUBJECT: ABUTMENT CAP DESIGN		CHECKED BY BPL	DATE 6/02

LOADING CONDITION 1:

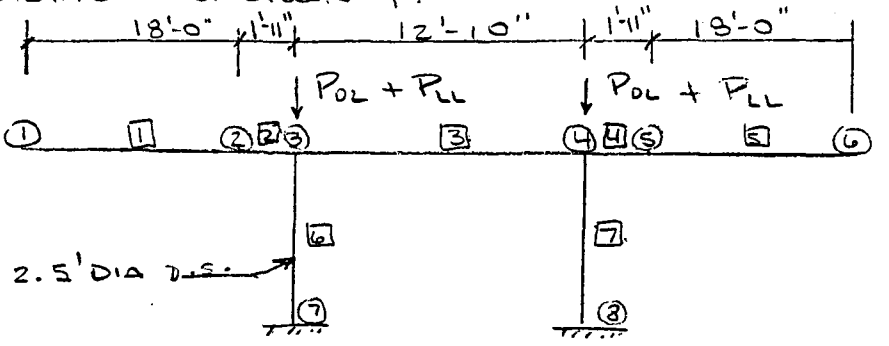

1071.52
Elev ~~1080.74~~

1056.20
Elev ~~1070.00~~

WINGWALL = 1'-2" x 3'-9" Avg Depth

CAP = 3'-0" DEEP x 3'-10" WIDE

LOADS.

✓ $P_{DL\ SUPER}$ = ~~15.15~~ 14.40 K ↓

✓ $P_{DL\ WW}$ = (4'-6" + 3'-0")(0.5)(1'-2")(0.15 KCF) = 0.66 K/ft

✓ P_{LL} = ~~10.72K~~ 10.40 /Brg ↓

✓ $P_{DL\ CAP}$ = (3.83')(3.0')(0.15 KCF) = 1.72 K/ft ↓

✓ $P_{DL\ BACKWALL}$ = (1.62')(1.16')(0.15 KCF) = 0.28 K/ft ↓

✓ $M_{BACKWALL}$ = (0.28 K/ft)(1.50 ft) = 0.42 K-ft/ft ↻

✓ $P_{APP.\ SEAT}$ = (1.5 SF)(0.15 KCF) = 0.3 K/ft ↓

✓ $M_{APP.\ SEAT}$ = (0.3 K/ft)(2.58 ft) = 0.77 K-ft/ft ↻

✓ P_{DL-DS} = (π/4)(2.5 ft)^2 (0.15 Kcf) = 0.74 K/ft ↓

✓ EARTH PRESSURE, $V_{E_{ABUT}}$ = (1/2)(4.5 ft)^2 (35 psf) (1/1000) = 0.35 K/ft → (ABUT

$V_{E_{WW}}$ = (1/2)(3.75 ft)^2 (35 psf) (1/1000) = 0.25 K/ft → (WIN

Surcharge: (2 ft)(35 psf - surcharge)(3.75') = 0.26 K/ft →

DMJM HARRIS	PROJECT: BHOC 87th ~~92nd~~ Ave Ped Bridge	JOB NO. 6888	SHEET 7 of 12
		DESIGNED BY SEO	DATE JUN 02
SUBJECT: Abutment Cap Design		CHECKED BY RPC	DATE 6/02

WIND ON SUPERSTRUCTURE

✓ $V_{W\ super\ T} = (50\ psf\ A_W)(7'\text{-}6'')(\cancel{48'\text{-}0''}\ 45.71)(0.5) = \cancel{9.0}\ 8.6\ K \xrightarrow{x}$ OR $\cancel{4.50}\ 4.30\ K/sup$

$M_{W\ Super\ T} = (\cancel{9.0}\ 8.6\ K)(7.5' + (0.5)(3\text{-}0\ ft))(0.5) = \cancel{40.50}\ 38.70\ K\text{-}ft$

apply moment as a couple:

$(\cancel{40.50}\ 38.70\ K\text{-}ft)(1/12.83\ ft) = \cancel{3.16}\ 3.02\ K \uparrow\downarrow$

OVERTURNING FORCES:

$V_{OT} = (20\ psf)(\cancel{48.0}\ 45.71\ ft)(13'\text{-}2'')(1/2) = \cancel{6.3}\ 6.10\ K \uparrow$

FORCE IS APPLIED AT $(1/4)(13'\text{-}2'') = 3.3\ ft$ from end of cap

RESULTING REACTIONS AT SUPPORTS = $\cancel{0.68}\ 1.49\ K \downarrow$, $\cancel{5.62}\ 4.60\ K \downarrow$

R+S+T

$H_m = (G)(A)(\Delta_s)(1/h_{rt})$

$G = 130\ psi$

$A = 8 \times 8 = 64\ in^2$

$\Delta_s = 0.25''$

$h_{rt} = 1.69''$

$H_m = (130)(64)(0.25'')(1/1.69'') = 1.23\ K < (25.9\ K)(0.2) = 5.18\ K$

$V_{R+S+T} = 1.23\ K \xrightarrow{z}$

$M_{x\ R+S+T} = (1.23\ K)(0.5)(3.0\ ft) = 1.85\ K\text{-}ft$

DMJM HARRIS	PROJECT: BHOC 87TH ~~83RD~~ AVE PED BRIDGE	JOB NO. 6883	SHEET 8 of 12
		DESIGNED BY SED	DATE JUN 02
SUBJECT: ABUTMENT DESIGN		CHECKED BY DPC	DATE 6/02

ANALYSIS

ASD , $f'_c = 4000$ psi $n = 8$ $f_c = 1600$ psi

$f_s = 24000$ psi $E = 3{,}604{,}997$ psi

DEPTH = 36"

WIDTH = 46"

STAAD PRO RESULTS: MEMBER 4, JT 4, LOAD CASE 13

$V_y = 16.30$ K ✓ $M_y = 101.37$ K-ft ✓

$V_z = 10.35$ K ✓ $M_z^{(-)} = 133.97$ K-ft

TORSION = 20.16 K-ft ✓ $M_z^{(+)} =$ IT IS ALL NEGATIVE MOMENT

SHEAR, V_y

$V_y = 16.30K$

$$v_y = \frac{(16.30K)(1000)}{(46")(31")} = 11.4 \text{ psi}$$

$$d = 36" - 4" - 1/2" - (0.5)(0.79") = 31"$$

$$(1/2)(V_c) = (1/2)(0.95)(4000)^{1/2} = 30.04 \text{ psi} > 11.4 \text{ psi}$$

NO MIN REINF. IS REQUIRED.

SHEAR, V_z

$V_z = 10.35^K$

$$v_z = \frac{(10.35^K)(1000)}{(36")(43")} = 6.69 \text{ psi}$$

$$d = 46" - 2" - 1/2" - (1/2)(0.79") = 43"$$

NO MIN REINF. IS REQUIRED

TORSION:

$T = 20.16K\text{-ft}$

Neglect Torsion if $T_v \le \phi\sqrt{f'_c}\left(\frac{A_{cp}^2}{P_{cp}}\right)$

where $A_{cp} = [46 - (2)(2")][36" - 2" - 4"] = 1260 \text{ in}^2$

$P_{cp} = (46" + 36")(2) = 164"$

$$T \le (0.55)(4000 \text{ psi})^{1/2}\left(\frac{(1260)^2}{164"}\right)(1/12000) = 28.06 \text{ K-ft}$$

∴ IGNORE TORSIONAL EFFECTS

DMJM HARRIS	PROJECT: BHOC 87TH AVE PED BRIDGE	JOB NO. 6888	SHEET 10 of 12
		DESIGNED BY SED	DATE JUN 02
SUBJECT: ABUTMENT DESIGN		CHECKED BY RPC	DATE 6/02

BENDING, M_y — ASSUME ABUT CAP RESISTS ALL THE MOMENT. (NEGLECT BACKWALL)

$M_y = 101.37$ k-ft

TRY $A_s = 1.23 \text{ in}^2$

$$\rho = \frac{1.23 \text{ in}^2}{(36")(43")} = 0.0008, \quad K = 0.107 \quad J = 0.964$$

$$f_s = \frac{(101.37 \text{ k-ft})(12000)}{(1.23 \text{ in}^2)(0.964)(43.0")} = 23{,}858 \text{ psi} < 24000 \text{ psi} \quad \text{OK}$$

$$f_c = \frac{(2)(101.37 \text{ k-ft})(12000)}{(0.107)(0.964)(36")(43")^2} = 354 \text{ psi} < 1600 \text{ psi} \quad \text{OK}$$

HOWEVER, INCREASE A_s BY (1/3) TO MEET MIN REINF. SAY 4 # 6, $A_s = 1.76 \text{ in}^2$

BENDING, $M_z^{(-)}$ — ASSUME TOP TWO BARS ON BACKWALL RESIST ALL THE MOMENT

$M_z = 133.97$ k-ft

TRY 2 # 8 TO MATCH WINGWALL REINFORCING, $A_s = 1.58 \text{ in}^2$

$$\rho = \frac{1.58 \text{ in}^2}{(14")(51")} = 0.0022, \quad K = 0.170, \quad J = 0.943$$

$$f_s = \frac{(133.97 \text{ k-ft})(12000)}{(0.943)(1.58 \text{ in}^2)(51")} = 21{,}157 \text{ psi} < 24000 \text{ psi} \quad \text{OK}$$

$$f_c = \frac{(2)(133.97 \text{ k-ft})(12000)}{(0.170)(0.943)(14")(51")^2} = 551 \text{ psi} < 1600 \text{ psi} \quad \text{OK}$$

$$\phi M_n = (0.90)\left[(1.58 \text{ in}^2)(60000 \text{ psi})(51" - (1.99)(1/2))\right](1/12000) = 356 \text{ k-ft}$$

$$a = \frac{(1.58 \text{ in}^2)(60000 \text{ psi})}{(0.85)(4000 \text{ psi})(14")} = 1.99"$$

$$(1.2)(M_{cr}) = (1.2)(7.5)(4000 \text{ psi})^{1/2}(14")(54")^2(1/6)(1/12000) = 322.7 \text{ k-ft}$$

$\phi M_n > 1.2 M_{cr}$ OK

DMJM HARRIS	PROJECT: BHOC 87TH ~~83RD~~ AVE PED BRIDGE	JOB NO. 6993	SHEET 11 of 12
		DESIGNED BY SED	DATE JUN 02
SUBJECT: ABUTMENT DESIGN		CHECKED BY RK	DATE 6/02

BENDING, $M_z^{(-)}$ ASSUME TOP BARS IN ABUT CAP RESIST ALL THE MOMENT.

$M_y = 133.97$ K-ft

TRY $A_s = 2.13 \text{ in}^2$

$$\rho = \frac{2.13 \text{ in}^2}{(46")(33")} = 0.0014 \quad , \quad K = 0.139 \quad j = 0.954$$

$$d = 36" - 2" - 1/2" - (0.5)(0.875") = 33"$$

$$f_s = \frac{(133.97 \text{ K-ft})(12000)}{(0.954)(2.13 \text{ in}^2)(33")} = 23{,}975 \text{ psi} < 24000 \text{ psi} \quad \text{OK}$$

$$f_c = \frac{(2)(133.97 \text{ K-ft})(12000)}{(0.139)(0.954)(46")(33")^2} = 484 \text{ psi} < 1600 \text{ psi} \quad \text{OK}$$

HOWEVER, INCREASE A_s BY (1/3) TO MEET MIN REINF. SAY 4 #8, $A_s = 3.16 \text{ in}^2$

DMJM HARRIS	PROJECT: BHOC 87TH AVE PED BRIDGE	JOB NO. 6833	SHEET 12 of 12
		DESIGNED BY SEO	DATE JUN 02
SUBJECT: ABUTMENT DESIGN		CHECKED BY DR.	DATE 6/02

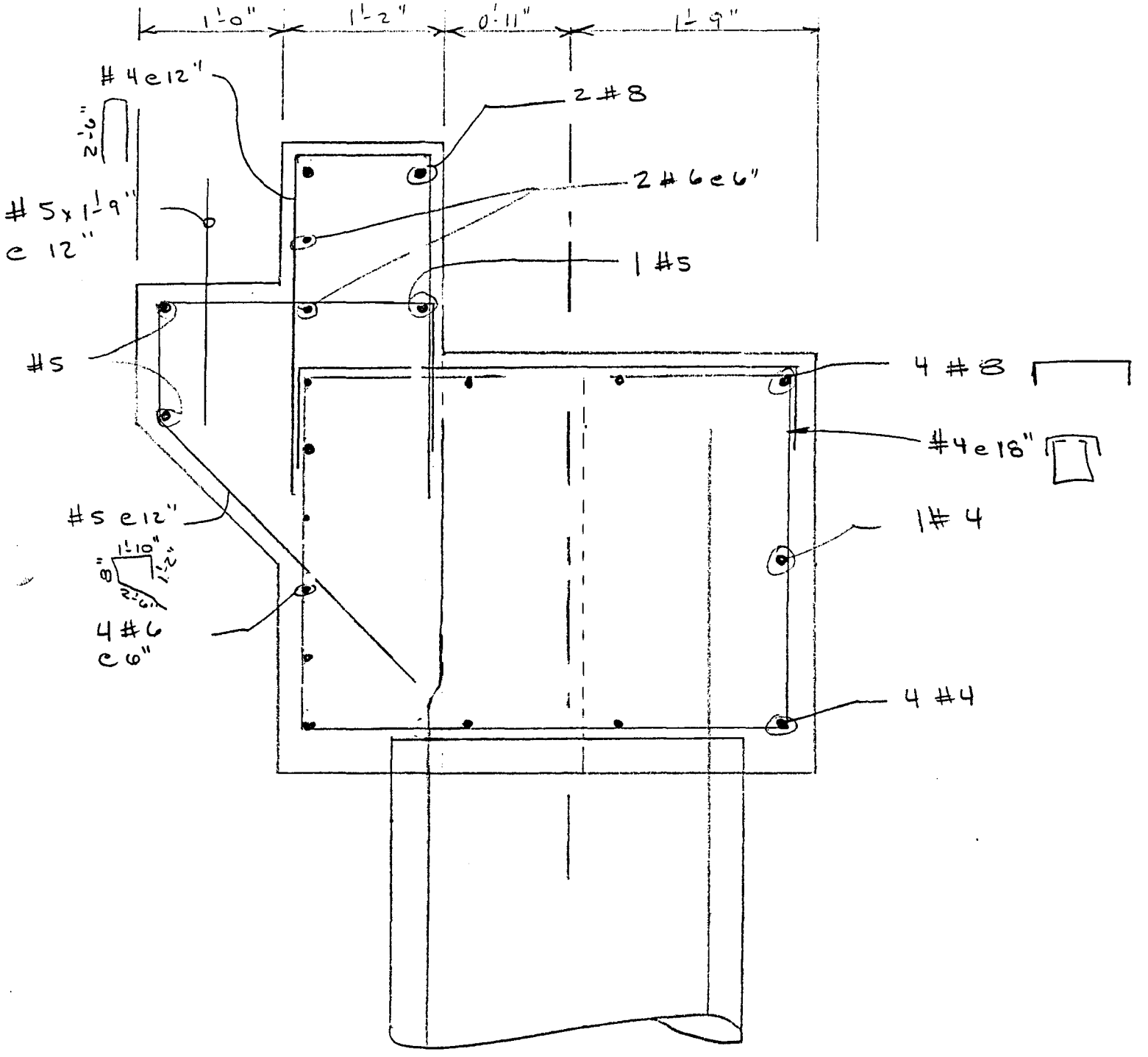

DMJM HARRIS	PROJECT: BHOC 87TH AVE PED BRIDGE	JOB NO. 6888	SHEET 1 of 6
		DESIGNED BY SEO	DATE JUN 02
SUBJECT: WINGWALL DESIGN		CHECKED BY DJK	DATE 6/02

ANALYSIS:

ASD, $f'_c = 4000$ psi $n = 8$ $f_c = 1600$ psi $f_s = 24000$ psi

$E = 3{,}604{,}997$ psi

DESIGN LENGTH = 18'-0"

DESIGN HEIGTH = 3'-9" Avg.

DESIGN LOADS:

ACTIVE PRESSURE = 35 pcf

ADD 2 FT OF EARTH SURCHARGE TO ACCOUNT FOR POSSIBLE LIVE LOAD SURCHARGE PRESSURE.

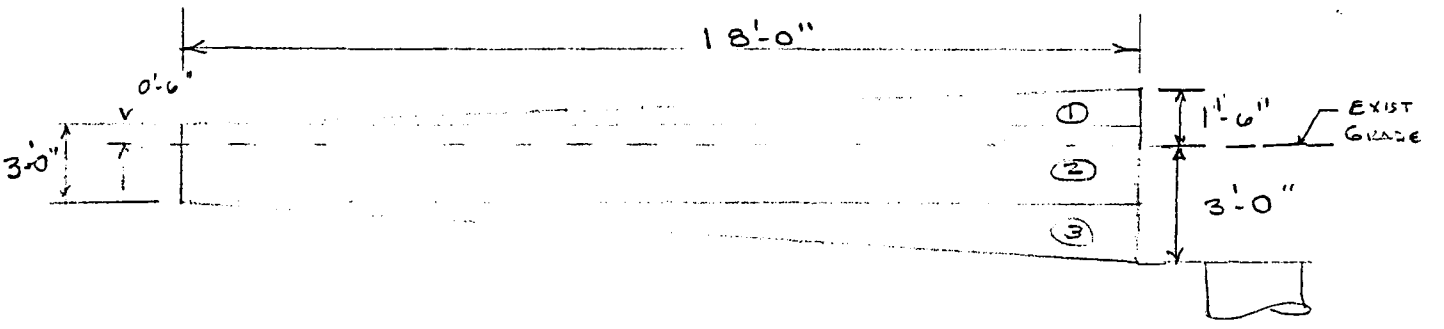

STAAD PRO RESULTS:

$V_y = 11.88$ K ✓ $V_z = 9.18$ K. ✓

$M_y = 82.62$ K-ft ✓

$M_z = 106.92$ K-ft ✓

THE MOMENTS AND SHEARS WILL NOT BE REDUCED FOR THE USE OF FILLETS AS ALLOWED BY AASHTO (CONSERVATIVE).

DMJM HARRIS	PROJECT: BHOC 87TH ~~83RD~~ AVE PED BRIDGE	JOB NO. 6888	SHEET 2 of 6
		DESIGNED BY SKO	DATE JUN 02
SUBJECT: WINGWALL DESIGN		CHECKED BY BPC	DATE 6/02

SHEAR, V_y

$V_y = 11.88$ K

$$v_y = \frac{(11.88K)(1000)}{(52")(1'-2")(12")} = 16.32 \text{ psi}$$

$$d = (4'-6")(12") - 2" = 52"$$

$$\left(\tfrac{1}{2}\right)(V_c) = \left(\tfrac{1}{2}\right)(0.95)(4000)^{1/2} = 30.04 \text{ psi} > 16.32 \text{ psi} \quad \text{OK.}$$

$\therefore$ NO MIN SHEAR REINF IS REQUIRED

BENDING, M_y

$M_{E+LL} = 82.62$ K-ft

$M/ft = 82.62^{K\text{-}ft}/4'-6" = 18.36$ K-ft

TRY # 6 @ 6": , $A_s = 0.88 \text{ in}^2$

$$\rho = \frac{0.88 \text{ in}^2}{(12")(11.50")} = 0.006 \Rightarrow K = 0.265 \quad J = 0.911$$

$$d = 14" - 2" - (1/2)(0.75") \approx 11.5"$$

$$f_s = \frac{(18.36 \text{ K-ft})(12")}{(0.911)(0.88 \text{ in}^2)(11.50")} = 23.90 \text{ ksi} < 24.0 \text{ ksi} \quad \text{OK.}$$

$$f_c = \frac{(2)(18.36 \text{ K-ft})(12")}{(0.265)(0.911)(12")(11.50")^2} = 1.15 \text{ ksi} < 1.6 \text{ ksi} \quad \text{OK.}$$

CHECK MIN REINFORCING:

$\phi M_n > 1.2 M_{cr}$

$$(1.2)(M_{cr}) = (1.2)(7.5)(4000)^{1/2}(12")(14")^2(1/6)(1/12000) = 18.59 \text{ K-ft/ft}$$

$$\phi M_n = (0.9)(0.83 \text{ in}^2)(60.0 \text{ ksi})(11.50" - (1/2)(1.29")) (1/12)$$

$$a = \frac{(0.83 \text{ in}^2)(60.0 \text{ ksi})}{(0.85)(4.0 \text{ ksi})(12")} = 1.29"$$

$\phi M_n = 42.98$ K-ft > 18.59 K-ft OK.

Development Length, $l_d = 18"$

[illegible] $(0.1)(1.5) = 30"$ [illegible] $2\frac{1}{2}$"

DMJM HARRIS	PROJECT: B Hoc 87TH ~~83RD~~ Ave Ped Bridge	JOB NO. 6883	SHEET 3 of 6
		DESIGNED BY SED	DATE JUN 02
SUBJECT: WINGWALL DESIGN		CHECKED BY [illegible]	DATE 6/02

SHEAR, V_z

$V = 9.18^K$

$$v = \frac{(9.18^K)(1000)}{(4'\text{-}6')(12'')(11.50'')} = 14.78 \text{ psi} < 30.04 \text{ psi} \quad \text{OK.}$$

$$d = 14'' - 2'' - (1/2)(0.75'') \approx 11.50''$$

No Min Shear Reinf. is required.

BENDING, M_z

$M_z = 106.92^{K\text{-}ft}$

TRY $A_s = 1.08 \text{ in}^2$

$$\rho = \frac{1.08 \text{ in}^2}{(14'')(52'')} = 0.0015, \Rightarrow K = 0.143 \quad j = 0.952$$

$$f_s = \frac{(106.92^{K\text{-}ft})(12'')}{(0.952)(1.08'')(52'')} = 23.99 \text{ Ksi} \approx 24.0 \text{ Ksi} \quad \text{OK.}$$

$$f_c = \frac{(2)(106.92^{K\text{-}ft})(12'')}{(0.143)(0.952)(14'')(52'')^2} = 0.50 \text{ Ksi} < 1.6 \text{ Ksi} \quad \text{OK}$$

PROVIDE 2 #7, $A_s = 1.20 \text{ in}^2$

MIN REINF. - SEE ABUTMENT CAP CALCULATIONS, OK

SPLICE LENGTH: $(22.8'')(1.4)(0.8)\left(\frac{1.08}{1.20}\right)(1.7) = 39''$ SAY $3'\text{-}4''$

DMJM HARRIS	PROJECT: BHOC 57TH ~~53RD~~ AVE PED BRIDGE	JOB NO. 6888	SHEET 4 of 6
		DESIGNED BY SEO	DATE JUN 02
SUBJECT: WINGWALL DESIGN		CHECKED BY DPC	DATE 6/02

CHECK DEFLECTION (ASSUMES BACKFILL FROM ROAD SIDE ONLY)

ASSUME UNIFORM LOAD FOR GENERATION OF MOMENT

$$W_{equiv} = \frac{(2)(M)}{\ell^2} = \frac{(2)(82.62\ K\text{-}ft)}{(4.5')(18.0\ ft)^2} = 0.11\ K/ft = 9.44\ \#/in$$

$$\Delta_{max} = \frac{(W)(\ell)^4}{(8)(E)(I_e)}$$

$$I_e = \left(\frac{M_{cr}}{M_{max}}\right)^3 I_g + \left[1 - \left(\frac{M_{cr}}{M_{max}}\right)^3\right] I_{cr}$$

$$M_{cr} = (18.59\ K\text{-}ft)(1/1.2) = 15.49\ K\text{-}ft$$

$$M_{max} = 18.36\ K\text{-}ft$$

$$I_g = (12")(14")^3(1/12) = 2744\ in^4$$

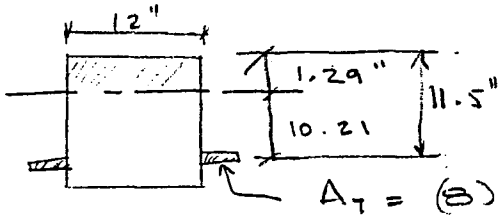

$$A_T = (8)(0.88\ in^2) = 7.04\ in^2$$

$$I_{cr} = \left(\tfrac{1}{3}\right)(12")(1.29")^3 + 7.04\ in^2(11.5" - 1.29")^2$$

$$= 743.0\ in^4$$

$$\therefore I_e = \left(\frac{15.49\ K\text{-}ft}{18.36\ K\text{-}ft}\right)^3 (2744\ in^4) + \left[1 - \left(\frac{15.49\ K\text{-}ft}{18.36\ K\text{-}ft}\right)^3\right](743.0\ in^4)$$

$$I_e = 1945.0\ in^4$$

$$\Delta_{max} = \frac{(9.44\ \#/in)(18\ ft \times 12")^4}{(8)(3604997\ psi)(1945.0\ in^4)} = 0.37"$$

THIS MAX DEFLECTION WILL BE REDUCED CONSIDERABLY IF WINGWALL IS BACKFILLED SIMULTANEOUSLY ON BOTH SIDES.

OK.

DMJM HARRIS	PROJECT: B HOC 87TH AVE PED. BRIDGE	JOB NO. 6833	SHEET 5 of 6
		DESIGNED BY SEN	DATE JUN 02
SUBJECT: WINGWALL DESIGN		CHECKED BY DPC	DATE 6/02

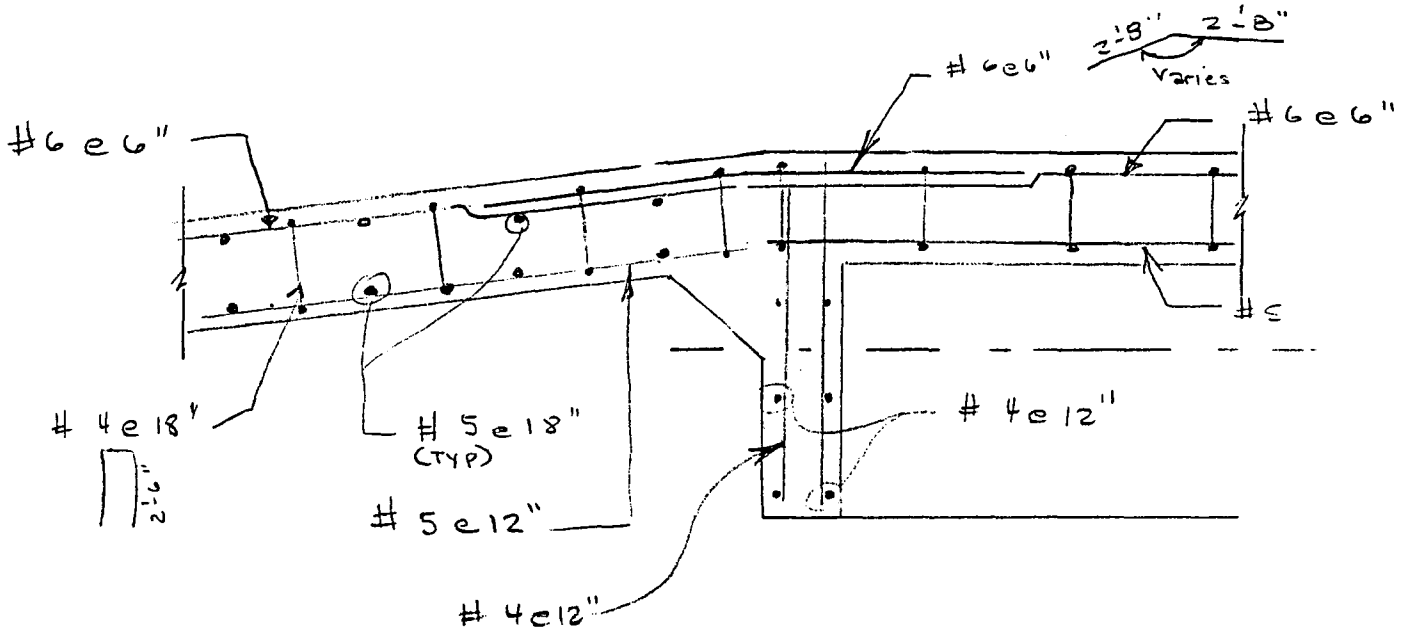

SECTION D-D

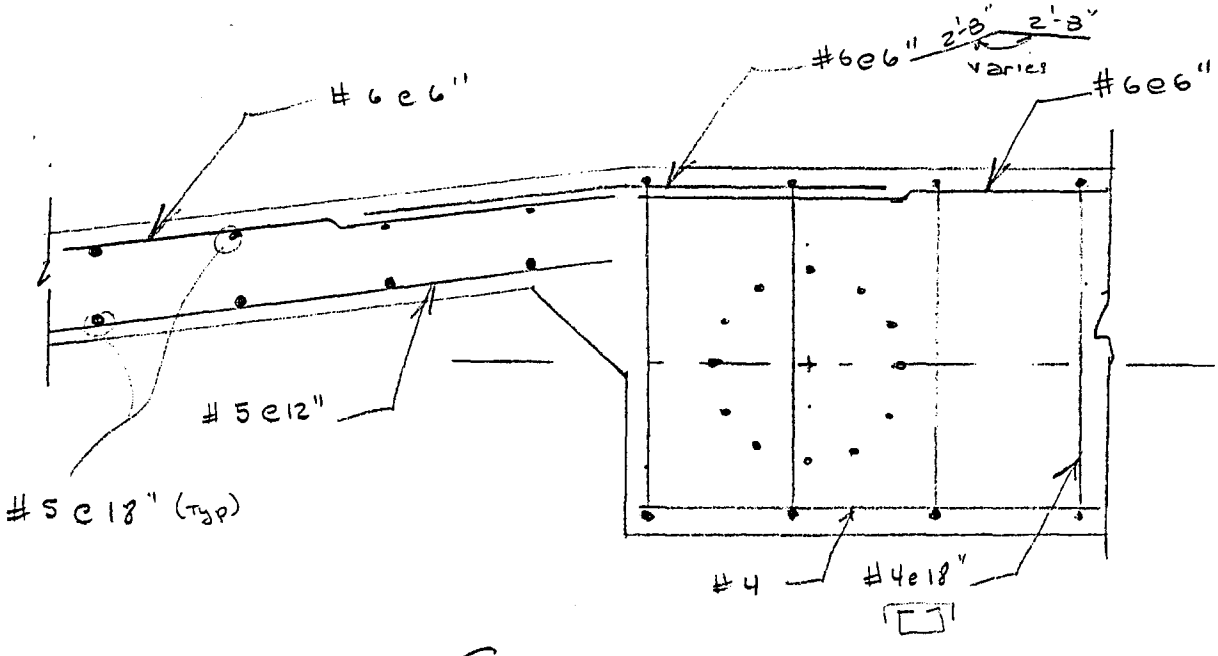

SECTION E-E

DMJM HARRIS

PROJECT: BHOC 87th St. Ave Ped Bridge

SUBJECT: Wingwall Design

JOB NO. 6888

DESIGNED BY SEO

CHECKED BY JPC

SHEET 6 of 6

DATE 6/02

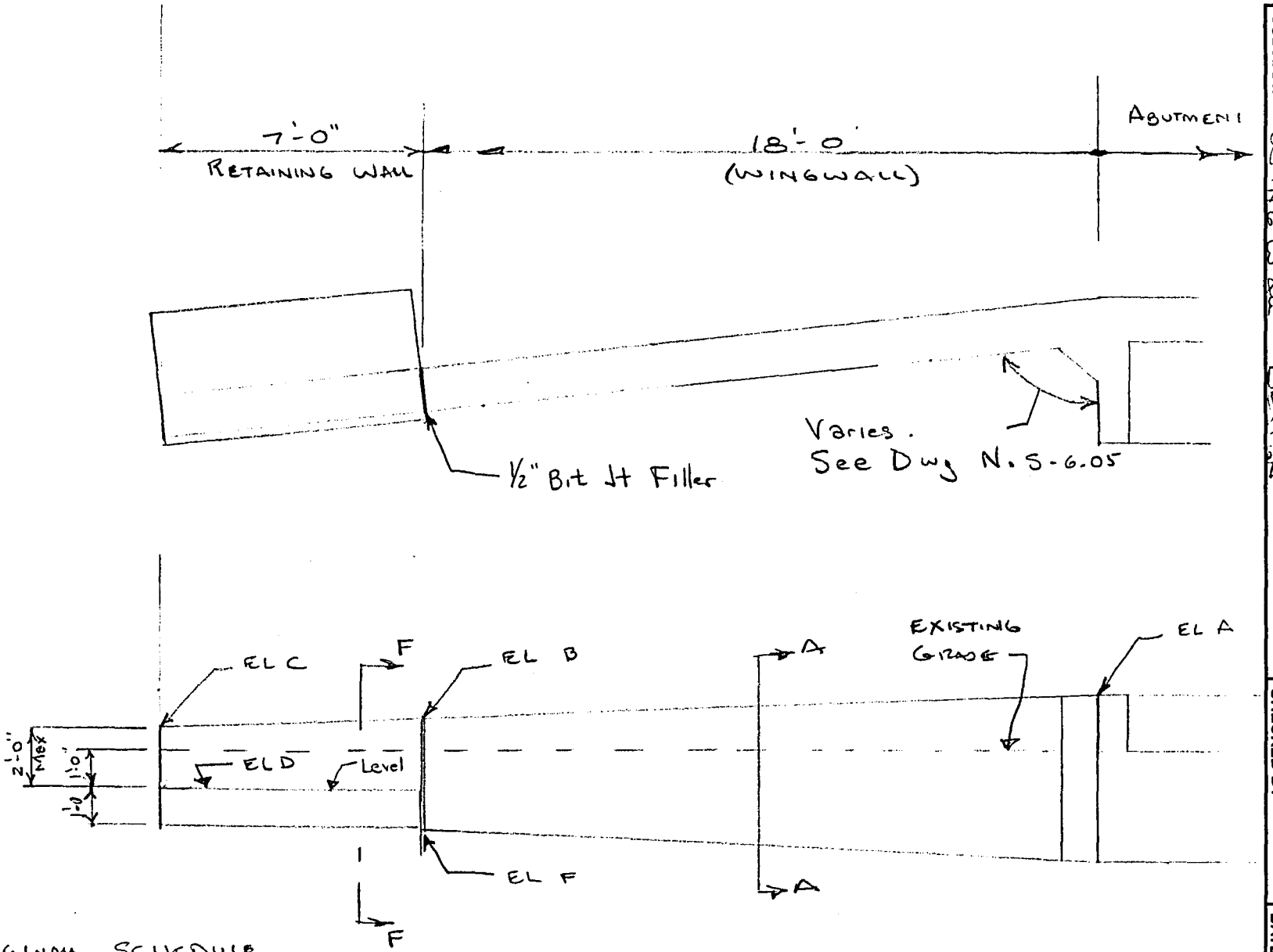

WINGWALL SCHEDULE

LOCATION		EL A	EL B	EL C	EL D	EL F
ABUT 1	EAST	1014.59 ~~1089.86~~	1013.81 ~~1089.14~~	1013.51 ~~1088.86~~	1012.04 ~~1087.42~~	~~1086.14~~ 1010.87
	WEST	1014.59 ~~1087.86~~	1013.87 ~~1089.14~~	1013.59 ~~1088.86~~	1012.03 ~~1087.33~~	~~1086.14~~ 1010.87
ABUT 2	EAST	1014.92 ~~1089.00~~	1014.29 ~~1088.28~~	1013.92 ~~1088.00~~	1012.40 ~~1086.68~~	~~1085.28~~ 1011.20
	WEST	1014.92 ~~1089.00~~	1014.29 ~~1088.28~~	1013.92 ~~1088.00~~	1012.12 ~~1086.82~~	~~1085.28~~ 1011.20

DMJM HARRIS	PROJECT: BHOC 87TH AVE PED BRIDGE	JOB NO. 6833	SHEET 1 of 11
		DESIGNED BY SEO	DATE JUN 02
SUBJECT: RETAINING WALL DESIGN		CHECKED BY DR	DATE 6/02

ANALYSIS

ASD , $f'_c = 3000$ psi , $E = 3,122,019$ psi , $n = 9$

$f_c = 1200$ psi $\quad f_s = 24000$ psi

DESIGN HEIGHT = 2.0 ft.

DESIGN LOADS

AT REST PRESSURE = 55 psf.

PASSIVE PRESSURE = 300 psf.

$\mu = 0.40$

2 ft SURCHARGE LOAD OR 16 K POINT LOAD.

DMJM HARRIS	PROJECT: BHOC 87TH Ave Ped Bridge	JOB NO. 6888	SHEET 2 of 11
		DESIGNED BY SEO	DATE JUNO2
SUBJECT: RETAINING WALL DESIGN		CHECKED BY DR	DATE 6/02

EXTERNAL STABILITY

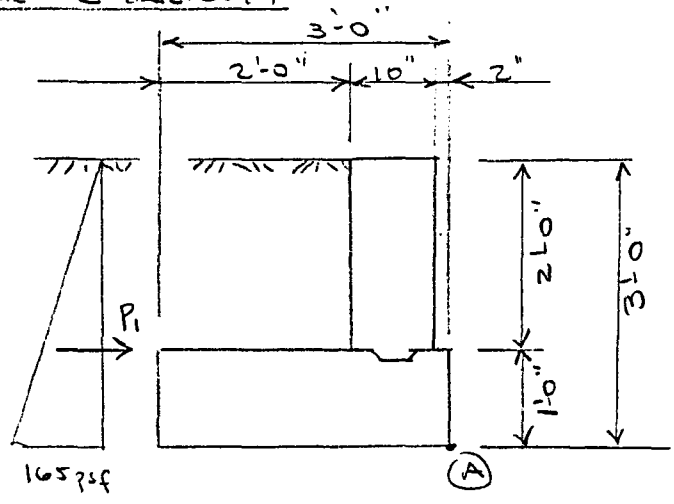

$(\gamma)(K_o) = 55$ psf

$(\gamma)(K_p) = 300$ psf

$\gamma_{backfill} = 120$ pcf

$\mu = 0.40$

Allowable Brg Pressure = 1500 psf

CASE I : BACKFILL ONLY

CHECK OVERTURNING:

SOURCE	F_X (#)	F_Y (#)	ARM TO (A) (ft)	$M_{DRIVING}$ (#-ft)	$M_{RESISTING}$ (#-ft)
P_1	248 #		1.0	248.0	
SOIL		480	2.0		960.0
FT_g		450	1.5		675.0
WALL		250	0.58		146.0
	248	1180		248.0	1781.0

$$FS_{OT} = \frac{1781.0}{248.0} = 7.18 > 2.0 \text{ OK}$$

CHECK SLIDING

DRIVING FORCES = 248 #

RESISTING FORCES = (1180#)(0.4) = 472.0 #

$$FS_{SLIDING} = \frac{472.0}{248\ \#} = 1.90 > 1.5 \text{ OK.}$$

LOCATION OF RESULTANT = (1781.0)(1/1180) = 1.5' from A. OK.

DMJM HARRIS	PROJECT: BHOC 87TH ~~BOTS~~ AVE PED BRIDGE	JOB NO. 6883	SHEET 3 of 11
		DESIGNED BY SEO	DATE JUN 02
SUBJECT: RETAINING WALL DESIGN		CHECKED BY ZK	DATE 6/02

CASE III: BACKFILL + POINT LOAD (16000 #)

THE POINT LOAD WILL INDUCE LATERAL EARTH PRESSURES, AND A VERTICAL LOAD ON THE FOOTING. THESE LOADS WILL BE DISTRIBUTED AT AN ASSUMED DISTANCE OF 3 ft (BOTH WAYS)

$m = \frac{2'-0''}{3'-0''} = 0.67$ $\quad P_q = \frac{(1.77)(P)(m)^2(n)^2}{(H)^2(m^2+n^2)^3}$

m	n	P_q
0.67	0.17	374
0.67	0.33	886
0.67	0.66	889
0.67	1.00	464

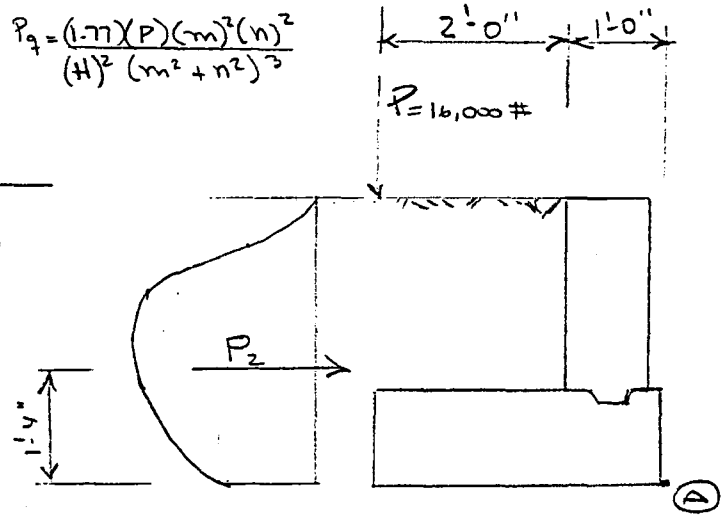

$P_2 = (1350\ \# + 750\ \#)(1/3\ ft) = 700\ \#/ft$ (EQUATES TO 5 FT OF SURCHARGE LOAD)

VERTICAL PRESSURE ON FTG: $(16{,}000\ \#)(1/9\ SF) = 1778\ psf$

$\therefore\ (1778\ psf)(2\ ft) = 3656\ \#/ft$

CHECK OVERTURNING

SOURCE	F_x (#)	F_y (#)	ARM TO (A) (ft)	M DRIVING (#-ft)	M RESISTING (#-ft)
P_1	248 #		1.0	248.0	
P_2	700 #		1.33	933.0	
SOIL		480	2.0		960.0
FTG		450	1.5		675.0
WALL		250	0.58		146.0
LL LOAD ON FTG		3656 #	2.0		7312.0
	948	4836		1181.0	9093

$FS_{OT} = \frac{9093}{1181.0} = 7.7 > 2.0$ OK

DMJM HARRIS	PROJECT: BHOC 87TH ~~[illegible]~~ Ave Ped Bridge	JOB NO. 6833	SHEET 4 of 11
		DESIGNED BY SEO	DATE Jun 02
SUBJECT: Retaining Wall Design		CHECKED BY DPC	DATE 6/02

CHECK SLIDING

$F_{DRIVING} = 948\ \#$

$F_{RESISTING} = (4836)(0.4) = 1934\ \#$

$FS_{sliding} = \frac{1934\ \#}{948\ \#} = 2.0 > 1.5$ OK.

LATERAL WALL PRESSURES DUE TO LINE LOADS AND POINT LOADS

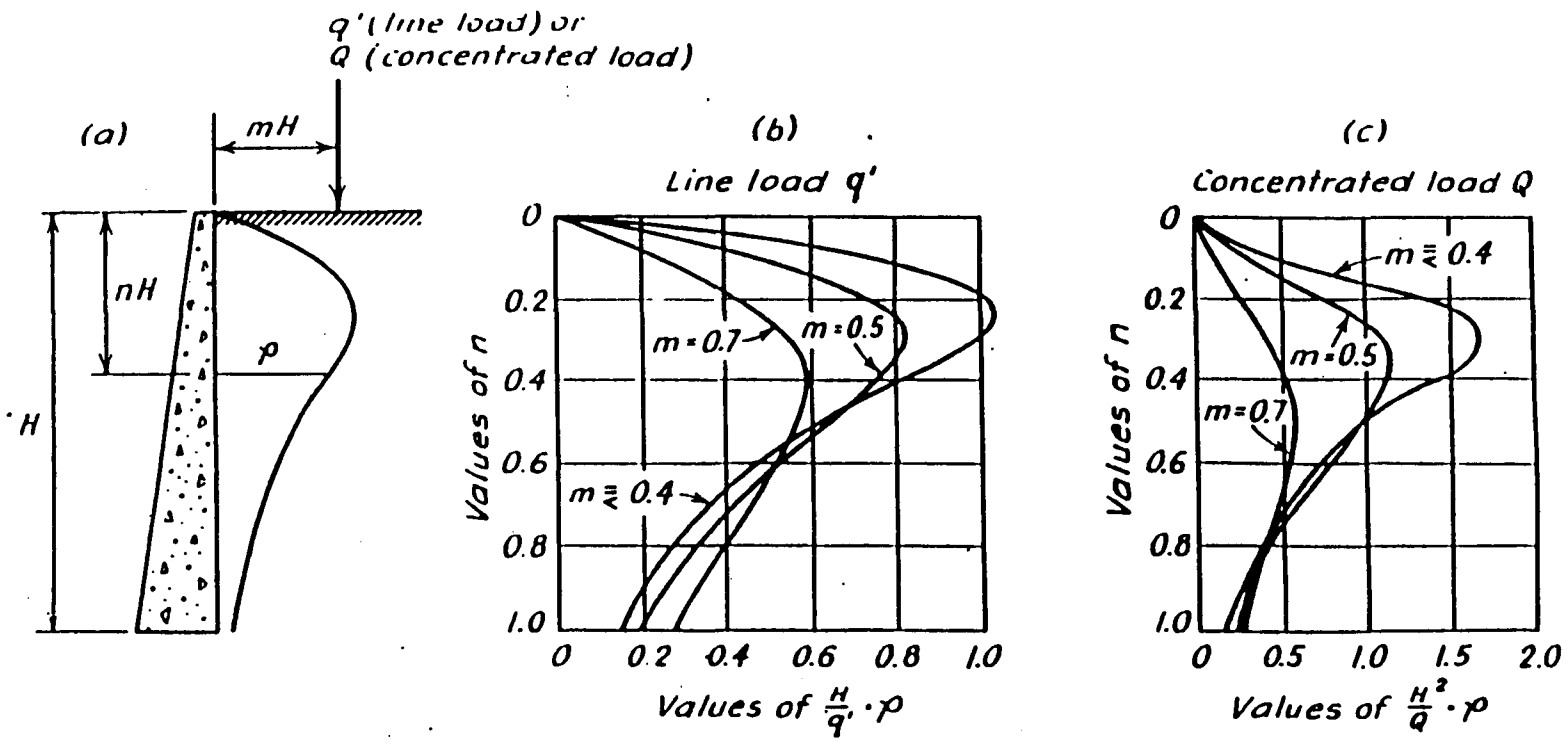

7. AT-REST SOIL PRESSURE

The active and passive pressures predicted by the Rankine and Coulomb theories assume the wall moves slightly. Lateral movement as little as $H/200$ is sufficient for the active/passive distributions to develop. In some situations, however, the soil is completely confined and cannot move. This "at rest" case is appropriate for soil next to bridge abutments, basement walls restrained at their tops, walls bearing on rock, and walls with soft-clay backfill, as well as for sand deposits of infinite depth and extent.

The horizontal pressure at rest depends on the *coefficient of earth pressure at rest*, k_o, which varies from 0.4 to 0.5 for untamped sand, from 0.5 to 0.7 for normally consolidated clays, and from 1.0 and up for overconsolidated clays.

$$p_o = k_o p_v \qquad 37.20$$

$$k_o \approx 1 - \sin\phi \qquad 37.21$$

$$R_o = \tfrac{1}{2} k_o \rho g H^2 \quad \text{[SI]} \qquad 37.22(a)$$

$$R_o = \tfrac{1}{2} k_o \gamma H^2 \quad \text{[U.S.]} \qquad 37.22(b)$$

Table 37.2 Typical Range of Earth Pressure Coefficients

condition	granular soil	cohesive soil
active	0.33–0.22	1–0.5
passive	3–14	1–2
at rest	0.4–0.6	0.4–0.8

8. GRAPHICAL SOLUTIONS

Appendix 37.A provides a convenient graphical method of evaluating the horizontal and vertical earth pressures for various soil types. Since average values of soil density have been incorporated, K_h and K_v have units of lbf/ft^3 (lbf/ft^2 per lineal foot of wall). H is defined as shown: the height of the soil directly above the heel.

$$R_{a,h} = \tfrac{1}{2} K_h H^2 \qquad 37.23$$

$$R_{a,v} = \tfrac{1}{2} K_v H^2 \qquad 37.24$$

$$R_a = \sqrt{R_{a,h}^2 + R_{a,v}^2} \qquad 37.25$$

$$\theta = \arctan\left(\frac{R_v}{R_h}\right) \qquad 37.26$$

Most complications involving irregular and stratified backfill, irregular surcharges, and sloping water tables require more complex calculations. However, App. 37.B provides a way of evaluating retaining walls with *broken slope backfill*.

9. SURCHARGE LOADING

A surcharge is an additional force applied at the exposed upper surface of the restrained soil. A surcharge can result from a uniform load, point load, line load, or strip load. (Line and strip loads are parallel to the wall.)

With a *uniform load surcharge* of q (in lbf/ft^2 (N/m^2)) at the surface, there will be an additional active force, R_q. R_q acts horizontally at $H/2$ above the base. This surcharge resultant is in addition to the backfill active force that acts at $H/3$ above the base.

$$p_q = k_a q \qquad 37.27$$

$$R_q = k_a q H \times \text{(wall width)} \qquad 37.28$$

If a vertical *point load surcharge* (e.g., a truck wheel), V_q, in pounds (newtons) is applied a distance x back from the wall face, the approximate distribution of pressure behind the wall can be found from Eq. 37.29 or 37.30. These equations assume elastic soil performance and a Poisson's ratio of 0.5. The coefficients have been adjusted to bring the theoretical results into agreement with observed values.

$$p_q = \frac{1.77 V_q m^2 n^2}{H^2 (m^2 + n^2)^3} \quad [m > 0.4] \qquad 37.29$$

$$p_q = \frac{0.28 V_q n^2}{H^2 (0.16 + n^2)^3} \quad [m \le 0.4] \qquad 37.30$$

$$R_q \approx \frac{0.78 V_q}{H} \quad [m = 0.4] \qquad 37.31$$

$$R_q \approx \frac{0.60 V_q}{H} \quad [m = 0.5] \qquad 37.32$$

$$R_q \approx \frac{0.46 V_q}{H} \quad [m = 0.6] \qquad 37.33$$

$$m = \frac{x}{H} \qquad 37.34$$

$$n = \frac{y}{H} \qquad 37.35$$

For a *line load surcharge*, L_q (in lbf/ft (N/m)), the distribution of pressure behind the wall is given by Eqs. 37.36 and 37.38.

$$p_q = \frac{4 L_q m^2 n}{\pi H (m^2 + n^2)^2} \quad [m > 0.4] \qquad 37.36$$

$$R_q = \frac{0.64 L_q}{m^2 + 1} \qquad 37.37$$

$$p_q = \frac{0.203 L_q n}{H (0.16 + n^2)^2} \quad [m \le 0.4] \qquad 37.38$$

$$R_q = 0.55 L_q \qquad 37.39$$

Sidewalks, railways, and roadways parallel to the retaining wall are examples of *strip surcharges*. The effect of a strip surcharge, S_q (in lbf/ft^2 (N/m^2)), is covered in most soils textbooks.

Geotechnical

DMJM HARRIS	PROJECT: BHOC 87TH ~~82ND~~ AVE PED BRIDGE	JOB NO. 6888	SHEET 7 of 11
		DESIGNED BY SEO	DATE JUN 02
SUBJECT: RETAINING WALL DESIGN		CHECKED BY DPC	DATE 6/02

CASE II: POINT LOAD AT 1'-0" AWAY FROM BACK FACE OF WALL. P = 16,000 #

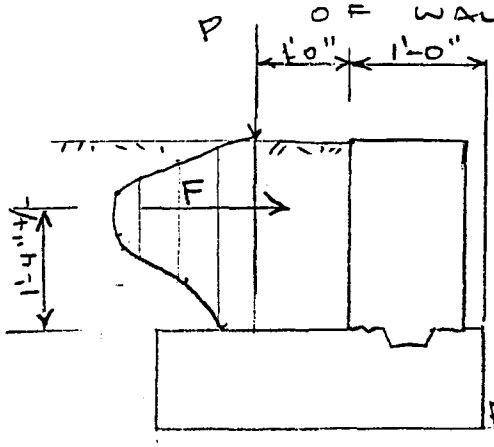

m	n	q_p (psf)
0.50	0.25	3625
0.50	0.50	3540
0.50	0.75	1856
0.50	1.00	906

F = Resultant Force = 2000 + 1400 + 800 + 600 = 4800

P_z = (4800 #)(1/3 ft) = 1600 #/ft
(EQUATES TO 7.6 ft OF SURCHARGE LOAD)

CHECK SHEAR:

$$V = \frac{F}{(b)(d)} = \frac{1600}{(12")(7.69")} = 17.4 \text{ psi}$$

$$d = 10" - 2" - (1/2)(0.625) = 7.69"$$

$$V_c = (0.95)(\sqrt{f'_c}) = 52.03 \text{ psi}$$

$V < (\frac{1}{2})(V_c)$ ∴ NO MIN SHEAR REINF IS REQUIRED

CHECK SLIDING FRICTION:

$$A_{vf} = \frac{V}{(f_s)(\mu)} = \frac{1600 \text{ \#/ft}}{(24000 \text{ psi})(0.6)} = 0.11 \text{ in}^2/\text{ft}$$

DMJM HARRIS	PROJECT: B HOC 87TH ~~53RD~~ AVE PED BRIDGE	JOB NO. 6888	SHEET 8 of 11
		DESIGNED BY SED	DATE JUN 02
SUBJECT: RETAINING WALL DESIGN		CHECKED BY BPC	DATE 6/02

FLEXURAL DESIGN:

$M = (1600\ \#/ft)(1'4") = 2133\ \#\text{-}ft$

TRY $A_s = 0.16\ in^2/ft.$

$\rho = \frac{0.16}{(12")(7.69")} = 0.0017$, $K = 0.1586$, $J = 0.947$

$f_s = \frac{(2133\ \#\text{-}ft)(12")}{(0.16\ in^2)(0.947)(7.69")} = 21{,}967\ psi < 24000\ psi$ OK

$f_c = \frac{(2)(2133\ \#\text{-}ft)(12")}{(0.947)(0.159)(12")(7.69")^2} = 479\ psi < 1600\ psi$ OK

CHECK MIN REINFORCING

$\phi M_n > 1.2 M_{cr}$

$\phi M_n = (0.9)\left[(0.16\ in^2)(60{,}000\ psi)(7.69")\left(1 - (0.6)(0.0017)\frac{(60.0)}{3.0}\right)\right](1/$

$= 5424\ \#\text{-}ft$

$1.2 M_{cr} = (1.2)(7.5)(3000)^{1/2}(12")(10")^2(1/6)(1/12") = 8216\ \#\text{-}ft$

$\phi M_n < 1.2 M_{cr}$

$\therefore$ INCREASE A_s BY $(1/3)$, $A_s = (1.33)(0.16\ in^2/ft) = 0.21\ in^2$

A_s FOR SLIDING FRICTION + FLEXURAL $= 0.11\ in^2/ft + 0.21\ in^2/ft$

$A_s = 0.33\ in^2/ft.$

SAY #5 @ 12", $A_s = 0.31\ in^2/ft$

PLUS ADD 2x4 CONT. KEYWAY.

DMJM HARRIS	PROJECT: 8th ~~83rd~~ 87TH Ave Peds Bridge	JOB NO. 6888	SHEET 9 of 11
		DESIGNED BY SED	DATE JUN 02
SUBJECT: Retaining Wall Design		CHECKED BY DPC	DATE 6/02

Development Length of #5 @12":

$$l_{hb} = (1200)(0.625")(1/(3000)^{1/2}) = 13.69"$$

$$(l_{hb})(0.7) = (13.69")(0.7) = 9.6" \text{ Min} \quad \text{Say } 10"$$

Temperature and Shrinkage

Use # 4 @ 18" Both faces and for outside face vertical.

Embed outside face vertical into footing to add fixity.

Footing Heel Extension (Case # Governs)

$$F_{y_{wheel}} = (1778 \text{ psf})(2'-0") = 3556 \text{ \#/ft} \quad \text{(wheel load)}$$

$$F_{y\,soil} = (2.0')(2'-0")(120 \text{ pcf}) = 480 \text{ \#/ft}$$

$$F_{ftg} = (1.0')(2'-0")(150 \text{ pcf}) = 300 \text{ \#/ft}$$

$$M = (3556\#)(1'-0") + (480\#)(1'-0") + (300\#)(1'-0") = 4336 \text{ \#-ft}$$

Try $A_s = 0.26 \text{ in}^2/\text{ft}$

$$\rho = \frac{0.26 \text{ in}^2}{(12")(9.75")} = 0.0022 \quad , \quad K = 0.18 \quad , \quad J = 0.935$$

$$d = 12" - 2" - (1/2)(0.5") = 9.75"$$

$f_s = 21,843$ psi OK, $f_c = 536.$ OK

$$\phi M_n = (0.9)(60{,}000 \text{ psi})(0.26)(9.75") \left[1 - (0.6)(0.0022)\left(\frac{60}{3.5}\right)\right](1/12)$$

$$= 11377 \text{ \#-ft.}$$

$$1.2 M_{cr} = (1.2)(7.5)(3000)^{1/2}(12")(12")^2(1/6)(1/12) = 11031 \text{ \#-ft}$$

DMJM HARRIS	PROJECT: BHOC 87TH ~~83RD~~ AVE PED BRIDGE	JOB NO. 6833	SHEET 10 of 11
		DESIGNED BY SED	DATE JUN 02
SUBJECT: RETAINING WALL DESIGN		CHECKED BY DPC	DATE 6/02

LONGITUDINAL REINFORCING ON FOOTING

$A_s = (0.002)(1'\text{-}0")(1'\text{-}0")(144\ in^2/ft) = 0.29\ in^2/ft$

SAY #5 @ 12"

DMJM HARRIS	PROJECT: BHOC 87TH AVE PED BRIDGE	JOB NO. 6888	SHEET 11 of 11
		DESIGNED BY SED	DATE JUNE 02
SUBJECT: RETAINING WALL DESIGN		CHECKED BY DPC	DATE 6/02

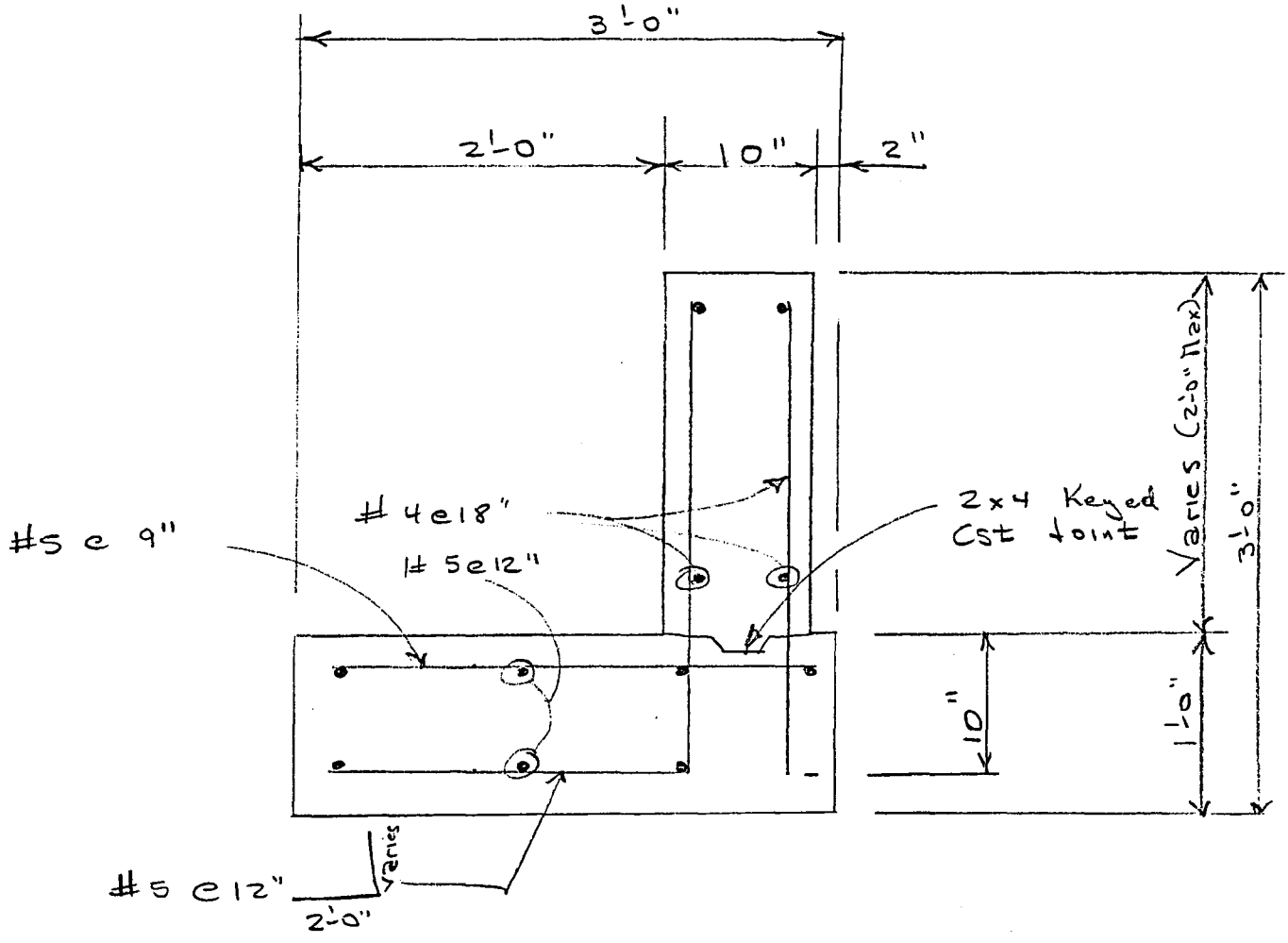

DMJM HARRIS	PROJECT: BHOC ~~83RD~~ 87TH AVE PED BRIDGE	JOB NO. 6888	SHEET 1 of 4
		DESIGNED BY SEO	DATE JUN 02
SUBJECT: DRILLED SHAFT DESIGN		CHECKED BY DPC	DATE 6/02

DRILLED SHAFT DIAMETER = 30"

AREA = $\pi(30")^2/4$ = 706.9 in²

MIN AREA OF STL = 7.07 in², MAX AREA OF STL = 5.66 in²

LFD

F_Y = 60,000 psi

f'c = 4000 psi

E = 3,604,997

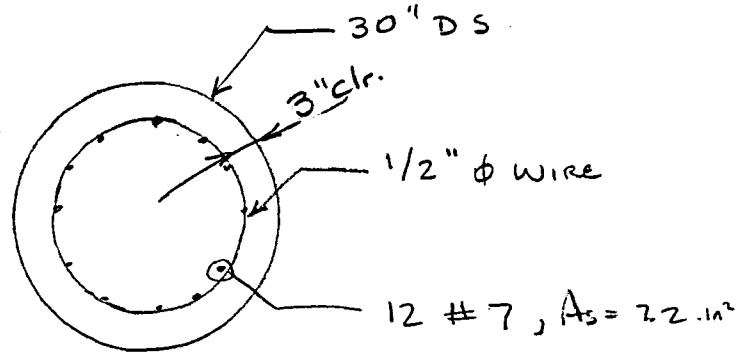

CIRCUMFERENCE OF LONG. BARS = $\pi(30" - (2)(3") - (2)(1/2") - 0.875")$ 69"

NUMBER OF BARS IN OUTER LOOP = 12 EA

CLEAR SPACING = 5.75" − 0.875 = 4.89"

OUTER LOOP RADIUS = $(1/2)(30" - (2)(3") - (2)(1/2") - 0.875")$ = 11.06"

NUMBER OF DS IN BENT = 2 EA

D.S. LENGTH = 35 ft (10 ft to MAX MOMENT)

DISTRIBUTION FACTORS : 0.99 TOP & 0.0 BOTTOM BOTH DIRECTIONS

DUCTILITY FACTOR = 5.0

CENTER OF GRAVITY TO SUPERSTRUCTURE = 2.25 ft

LOADS AND CROSS SECTIONS AT TOP OF DS

DEVELOPMENT LENGTH:

$l_d = (0.04)(0.60 \text{ in}^2)(60{,}000)(1/\sqrt{4000})$ = 22.8 in

$(l_d)(1.4)$ = 32"

NOTE: 30" MAX ld IS available. CAN 30" OK (A . /A . ...)

DMJM HARRIS	PROJECT: BHOC 87TH ~~83rd~~ AVE PED BRIDGE	JOB NO. 6888	SHEET 2 of 4
		DESIGNED BY SEO	DATE JUN 02
SUBJECT: DRILLED SHAFT DESIGN		CHECKED BY DPC	DATE 6/02

LATERAL REINFORCEMENT:

$V_y = 14.40$ Kips

$$v = \frac{(14.40\text{ Kips})(1000)}{(30'')(30'' - 3'' - 1/2'' - (.5)(0.875))} = 18.42 \text{ psi}$$

$v_c = (0.75)(4000)^{1/2} = 60$ psi

$v < (0.5)v_c)$ ∴ No Reinf is Required. However, Provide $A_{s\,min.}$

$$A_v = \frac{(50)(b_w)(s)}{f_y} = \frac{(50)(30)(12'')}{60{,}000} = 0.30 \text{ in}^2/\text{ft}$$

1/2" Dia Spiral:

$$\rho_s \geq (0.45)\left(\frac{A_g}{A_c} - 1\right)\left(\frac{f'_c}{f_y}\right)$$

where A_c = Area of core measured to the outside diameter of the spiral.

$A_c = \pi(30'' - (2)(3''))^2/4 = 452.4 \text{ in}^2$

$A_g = \pi(30'')^2/4 = 706.9 \text{ in}^2$

$$\rho_s \geq (0.45)\left(\frac{706.9 \text{ in}^2}{452.4 \text{ in}^2} - 1\right)\left(\frac{4000}{60000}\right) = 0.017$$

$$\rho_s = \frac{\text{Spiral Reinforcement}}{\text{Volume of Core}}$$

TRY 1/2" @ 6", $A_s = 0.80 \text{ in}^2/\text{ft} > 0.30 \text{ in}^2/\text{ft}$ ∴ OK.

$$\rho_s = \frac{(\pi)(23.5'')(0.40 \text{ in}^2)}{(452.4 \text{ in}^2)(6'')} = 0.011 < 0.017 \quad \text{N.G.}$$

However, Provide 1/2" @ 6" since shear reinf is not required by analysis

DMJM HARRIS	PROJECT: BHOC 87TH AVE PED BRIDGE	JOB NO. 6883	SHEET 3 of 4
		DESIGNED BY [illegible]	DATE JUN 02
SUBJECT: DRILLED SHAFT DESIGN		CHECKED BY DPC	DATE 6/02

DESIGN AXIAL LOADS P = ~~69.52~~ 67.20 K

THE LATERAL LOADING WILL CONTROL THE DESIGN LENGTH.

DEPTH REQUIRED FOR LATERAL LOADING = ~~30~~ 25 ft

	TOP EL		BOTT EL	
ABUT 1	1070.27	~~1085.49~~	~~1055.49~~	1045.27
ABUT 2	1070.53	~~1084.71~~	~~1054.71~~	1045.53

CAPACITY OF 30" DIA SHAFT @ ~~30~~ 25 ft = ~~190.0~~ 160.0 K

Figure 1 - Recommended Allowable Downward Capacity of Drilled Shafts 87th Avenue Pedestrian Bridge

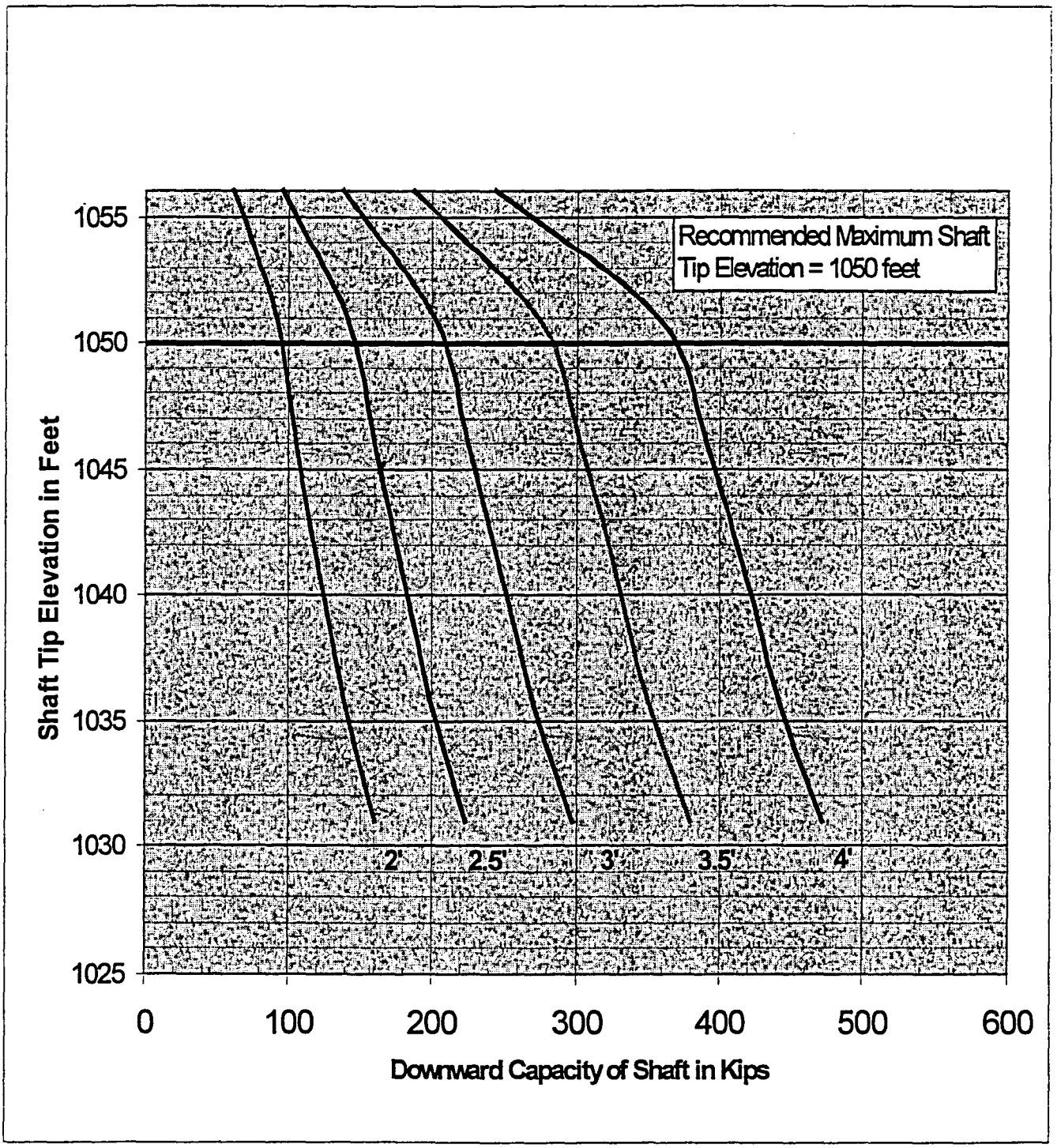

DMJM HARRIS	PROJECT: BHOC 87TH AVE PED BRIDGE	JOB NO. 6888	SHEET 1 of 6
		DESIGNED BY SEO	DATE JUN 02
SUBJECT: GEOMETRY		CHECKED BY DPC	DATE 6/02

ABUTMENT GEOMETRY

TOP OF ABUTMENT TO BE LEVEL WITH THE EXISTING GRADE:

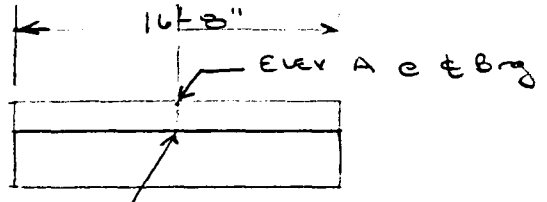

ELEV 1073.02 (ABUT 1)

ELEV 1073.33 (ABUT 2)

2" BEARING PAD

1" ALLOWANCE FOR BRG PLATES

1'-4" SUPERSTRUCTURE DEPTH

TOTAL = 1'-7"

ELEV A ℄ Brg ABUT 1 = 1074.60

ELEV A ℄ Brg ABUT 2 = 1074.91

% GRADE BETWEEN ℄ Brg ABUT 1 & 2 = $\frac{74.91 - 74.60}{43.88}$ = 0.7065 %

BEGIN OF BRIDGE EL = 1074.60 − (0.007065)(2'-1") = 1074.59

END OF BRIDGE EL = 1074.91 + (0.007065)(2'-1") = 1074.92

BRIDGE IS PARALLEL WITH CANAL. WINGWALLS NEED TO FLARE BACK TOWARDS THE CANAL. ANGLES OBTAINED FROM MICRO STATION AS FOLLOWS:

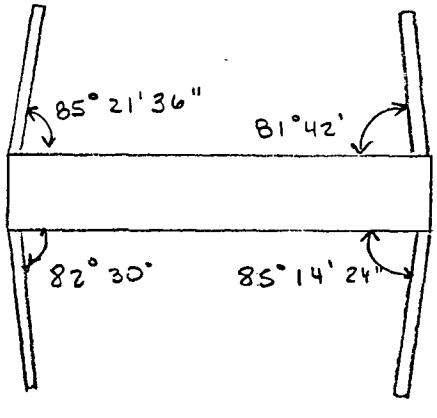

DMJM HARRIS	PROJECT: B+O C 87TH PED BRIDGE	JOB NO. 6888	SHEET 2 of 6
		DESIGNED BY SEO	DATE JUN 02
SUBJECT: WINGWALL ELEVATIONS		CHECKED BY DPC	DATE 6/02

ABUTMENT 1

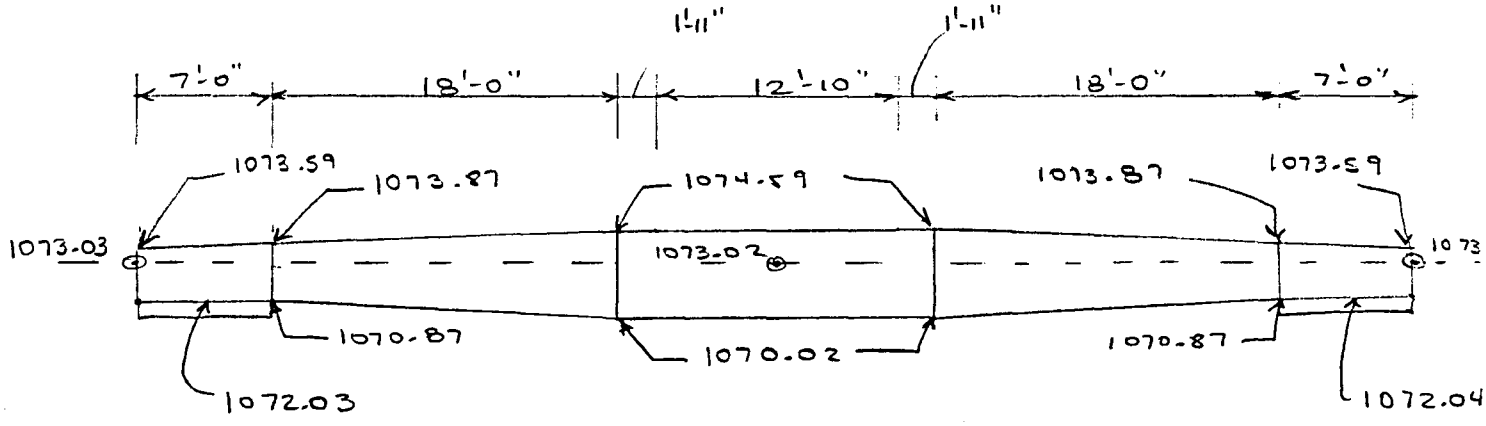

ELEVATION
(LOOKING NORTH TO ABUT 2)

ABUTMENT 2

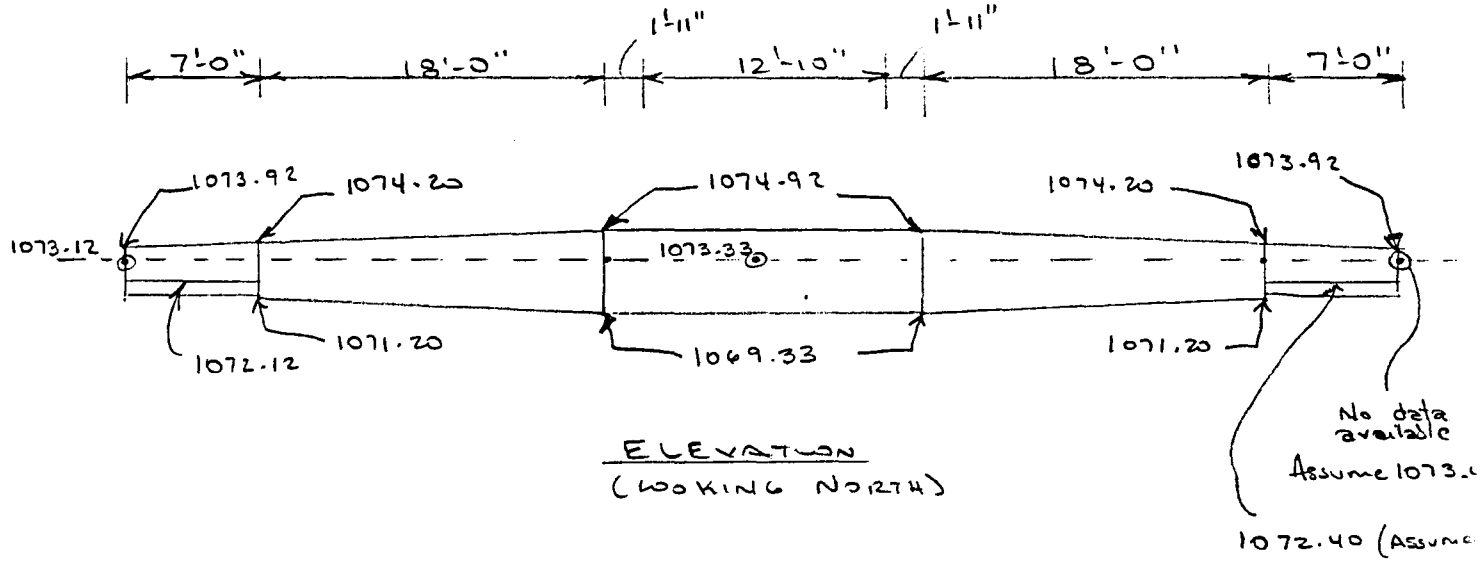

ELEVATION
(LOOKING NORTH)

Note. THE LENGTH OF THE WW AT ABUT 2, WEST SIDE THEORETICALLY HAS TO BE LONGER IN ORDER TO PROVIDE THE 6" MIN DISTANCE FROM TOP OF WALL TO EXIST. GROUND. THE LENGTH OF THE WALL WILL BE KEPT AT 7'-0" ASSUMING THE CONTRACTOR WOULD RAISE THE EXIST O&M ROAD BY 4" +/-.

```
5009,918275.849284,599326.001989,1073.279267,NE Cor Wingwall
5010,918278.077118,599301.127331,1073.084779,NE Cor Abut 2
5011,918274.241365,599301.041100,1073.155511,SE Cor Abut 2
5012,918274.558012,599284.354268,1072.940517,SW Cor Abut 2
5013,918278.386291,599284.354906,1072.959721,NW Cor Abut 2
5014,918277.119588,599259.381537,1072.708900,NW Cor Wingwall
5015,918232.228669,599283.504183,1073.130812,SW Cor Abut 1
5016,918236.069152,599283.610453,1072.548876,NW Cor Abut 1
5017,918234.462652,599258.657159,1073.106092,SW Cor Wingwall
5018,918231.916346,599300.196371,1073.150426,SE Cor Abut 1
5019,918235.752688,599300.299715,1072.939038,NE Cor Abut 1
5020,918233.172949,599325.145254,1073.133292,SE Cor Wingwall
5024,918109.772231,602966.411415,1087.683700,SE Cor Wingwall
5025,918127.465518,602948.789937,1087.693639,SE Cor Abut 2
5026,918124.832723,602946.046993,1087.214864,SW Cor Abut 2
5027,918137.151580,602934.765375,1087.614505,NW Cor Abut 2
5028,918139.735234,602937.599441,1087.693062,NE Cor Abut 2
5029,918156.754521,602919.158480,1087.824207,NE Cor Wingwall
5030,918124.666014,602883.974593,1088.327428,NW Cor Wingwall
5031,918106.578094,602901.240114,1088.284959,NW Cor Abut 1
5032,918109.150239,602904.163183,1087.793887,NE Cor Abut 1
5033,918096.853385,602915.397999,1088.277906,SE Cor Abut 1
5034,918094.269988,602912.493043,1088.327558,SW Cor Abut 1
5035,918077.485240,602931.046329,1088.418856,SW Cor Wingwall
5038,917984.374139,603110.964227,1085.136392,TOE ST
5039,917978.810778,603104.250514,1088.008208,ERD ST
5040,917969.676185,603093.814281,1088.268288,ERD1 ST
5041,917968.688958,603092.888381,1087.791375,CNL ST
5042,917948.405137,603111.543840,1087.665427,CNL
5043,917949.352438,603112.948922,1088.091573,ERD1
5044,917956.421350,603122.418325,1088.689834,ERD
5045,917955.523523,603124.227123,1088.547258,PP
5046,917964.462822,603129.906795,1085.073307,TOE
5047,917944.560517,603148.535248,1085.028908,TOE
5048,917936.830619,603142.779120,1088.628123,ERD
5049,917929.189698,603132.750686,1088.402517,ERD1
5050,917927.622311,603131.310211,1087.809194,CNL
5051,917908.930427,603148.419471,1087.772308,CNL
5052,917910.589342,603150.102360,1088.541032,ERD1
5053,917919.280197,603159.991291,1088.529404,ERD
5054,917924.702207,603166.299837,1085.046770,TOE
5055,917905.024931,603185.728633,1084.948553,TOE
5056,917899.254506,603179.368392,1088.395175,ERD
5057,917889.831504,603168.060706,1088.396165,ERD1
5058,917888.271034,603166.234685,1087.651484,CNL
5059,917868.815234,603183.004565,1087.488907,CNL
5060,917870.671269,603185.120035,1088.533469,ERD1
5061,917880.242650,603196.429527,1088.272438,ERD
5062,917885.220071,603201.992081,1085.294775,TOE
5063,918094.035782,602976.164773,1087.585868,CNL ST
5064,918094.662034,602976.845395,1087.660783,ERD ST
5065,918102.223087,602985.527060,1087.455010,ERD1 ST
5066,918111.933781,602995.114182,1085.444314,TOE ST
5067,918131.172222,602976.322740,1085.627854,TOE
5068,918122.194357,602966.763882,1087.532844,ERD1
5069,918113.313732,602959.029080,1087.614678,ERD
5070,918112.361657,602957.794899,1087.401092,CNL
5071,918130.113973,602939.947327,1087.288819,CNL
5072,918131.546051,602940.430744,1087.444186,ERD
5073,918139.920241,602949.543416,1087.573410,ERD1
5074,918144.326789,602954.184239,1085.998281,TOE
5075,918161.852872,602936.420848,1086.198819,TOE
5076,918156.374013,602931.237540,1087.755061,ERD1
```

```
5077,918147.530180,602923.070785,1087.655207,ERD
5078,918146.897413,602922.369477,1087.503239,CNL
5079,918163.916465,602903.122818,1087.476974,CNL
5080,918165.088177,602904.402280,1088.069642,ERD
5081,918174.218030,602912.937289,1087.799280,ERD1
5082,918179.143457,602917.623545,1086.265213,TOE
5083,917841.044486,603152.644728,1087.791882,CNL ST
5084,917840.313576,603151.787282,1088.038307,ERD ST
5085,917830.474869,603136.249829,1087.987052,ERD1 ST
5086,917823.518434,603128.554781,1086.260105,TOE ST
5087,917849.881512,603111.903689,1086.975648,TOE
5088,917853.607123,603116.273328,1087.917277,ERD1
5089,917864.891364,603129.526399,1088.124753,ERD
5090,917865.391590,603130.401455,1087.844633,CNL
5091,917884.786918,603112.763677,1087.766587,CNL
5092,917883.965385,603111.891034,1088.117560,ERD
5093,917871.422710,603098.265933,1087.911373,ERD1
5094,917869.083344,603095.165508,1086.590052,TOE
5095,917887.285168,603075.996979,1086.330356,TOE
5096,917891.303396,603080.731369,1087.475802,ERD1
5097,917903.469669,603094.409055,1088.228749,ERD
5098,917904.076941,603095.442491,1087.766911,CNL
5099,917922.992378,603078.235616,1087.857626,CNL
5100,917922.736191,603077.079107,1088.208727,ERD
5101,917911.289641,603064.612371,1087.440324,ERD1
5102,917906.221863,603058.174649,1086.181998,TOE
5103,917924.073639,603041.209519,1086.142504,TOE
5104,917929.978625,603048.051384,1087.294219,ERD1
5105,917940.605707,603060.858827,1088.056546,ERD
5106,917941.084916,603061.678655,1087.844924,CNL
5107,918068.045720,602945.001151,1087.728433,CNL ST
5108,918066.856656,602943.902158,1088.211520,ERD ST
5109,918054.959244,602930.673715,1088.223961,ERD1 ST
5110,918044.872015,602919.875411,1086.391308,TOE ST
5111,918061.497866,602903.354629,1085.819504,TOE
5112,918072.481797,602914.215845,1087.876685,ERD1
5113,918084.972090,602926.686769,1088.261700,ERD
5114,918085.776244,602927.370100,1087.788273,CNL
5115,918103.561072,602910.237360,1087.820665,CNL
5116,918102.848085,602909.305649,1088.251480,ERD
5117,918091.111332,602897.188533,1087.782178,ERD1
5118,918077.498652,602882.992183,1085.278893,TOE
5119,918095.772205,602862.904198,1085.199349,TOE
5120,918108.698541,602876.376356,1087.623479,ERD1
5121,918121.954288,602889.173493,1088.211061,ERD
5122,918124.162469,602889.103051,1087.846501,CNL
5123,918139.489106,602872.236738,1087.612605,CNL
5124,918138.017640,602871.166330,1088.218622,ERD
5125,918125.388167,602859.968811,1087.566501,ERD1
5126,918116.608731,602850.435893,1085.632129,TOE
5127,918133.038923,602928.135624,1081.677008,TOE ST
5128,917921.976796,603128.431943,1081.780090,TOE
5129,918127.558012,602895.462709,1081.574033,TOE ST
5130,917686.390200,603300.980659,1082.150149,TOE
5131,918238.877446,603346.630761,1087.132370,BSCK
5200,918309.599146,599558.393402,1071.907049,BSCK
5201,918278.396785,599284.314637,1073.006195,FSCK
5202,918301.762272,599343.161902,1072.385671,TOP ST
5203,918301.738371,599318.481560,1072.167844,TOP
5204,918302.113226,599292.337290,1071.954926,TOP
5205,918301.698939,599267.580039,1071.850524,TOP
5206,918301.837332,599242.397268,1071.756834,TOP
5207,918274.216398,599242.574787,1072.412253,TOP1 ST
```

```
5208,918273.888601,599267.743151,1072.605957,TOP1
5209,918273.921158,599292.539448,1073.010934,TOP1
5210,918274.620527,599317.552799,1073.125470,TOP1
5211,918274.906546,599342.643772,1073.345221,TOP1
5212,918271.858979,599342.768616,1071.391755,GB ST
5213,918271.433258,599317.717401,1071.239373,GB
5214,918271.392649,599292.679299,1071.357589,GB
5215,918271.775625,599267.722664,1071.423394,GB
5216,918271.911585,599242.703482,1071.103744,GB
5217,918212.787726,599241.816782,1072.071956,TOP ST
5218,918212.702171,599266.426440,1072.221225,TOP
5219,918212.603394,599291.732107,1072.443882,TOP
5220,918212.395654,599316.735812,1072.023073,TOP
5221,918212.421299,599341.623672,1072.093094,TOP
5222,918234.549321,599341.877757,1073.045862,TOP1 ST
5223,918236.984221,599341.791052,1071.424093,GB ST
5224,918237.542025,599316.827089,1071.215389,GB
5225,918234.893460,599316.786763,1073.016503,TOP1
5226,918234.839106,599291.723929,1072.938611,TOP1
5227,918237.535127,599291.872181,1071.254069,GB
5228,918238.338457,599266.603915,1071.155300,GB
5229,918235.410387,599266.912643,1073.036653,TOP1
5230,918235.346096,599241.809622,1073.027738,TOP1
5231,918237.962474,599241.745417,1071.144054,GB
5232,918222.009211,599241.656438,1072.658398,ERD ST
5233,918222.246300,599266.508256,1072.722778,ERD
5234,918221.658799,599291.771751,1072.806820,ERD
5235,918221.490418,599316.642314,1072.901796,ERD
5236,918221.032515,599340.816545,1072.920240,ERD
5237,918219.465021,599241.417633,1072.535220,OHE ST
5238,918220.057231,599284.930734,1073.221240,PP OHE
5239,918219.246362,599313.806916,1073.141226,DG
5240,918219.055645,599341.523875,1072.823293,OHE
5241,918243.498542,599242.197124,1065.675672,TOE ST
5242,918243.563995,599266.971747,1065.825299,TOE
5243,918243.162771,599291.474304,1066.004386,TOE
5244,918242.776515,599316.921510,1065.945409,TOE
5245,918242.089851,599342.075836,1066.022749,TOE
5246,918266.681139,599342.575614,1065.794172,TOE1 ST
5247,918266.369345,599317.723807,1065.704123,TOE1
5248,918266.492989,599292.734160,1065.900818,TOE1
5249,918266.383795,599267.605358,1065.567558,TOE1
5250,918266.568014,599242.912745,1065.428791,TOE1
5251,918309.599147,599558.393435,1071.881624,BSCK2
5252,918212.829100,602852.415900,1081.630000,TOE10
5253,917829.130300,603216.542700,1081.830000,TOE10
5254,918204.861900,602824.405900,1081.470000,TOE11
5255,917859.403400,603141.948500,1081.920000,TOE11
```

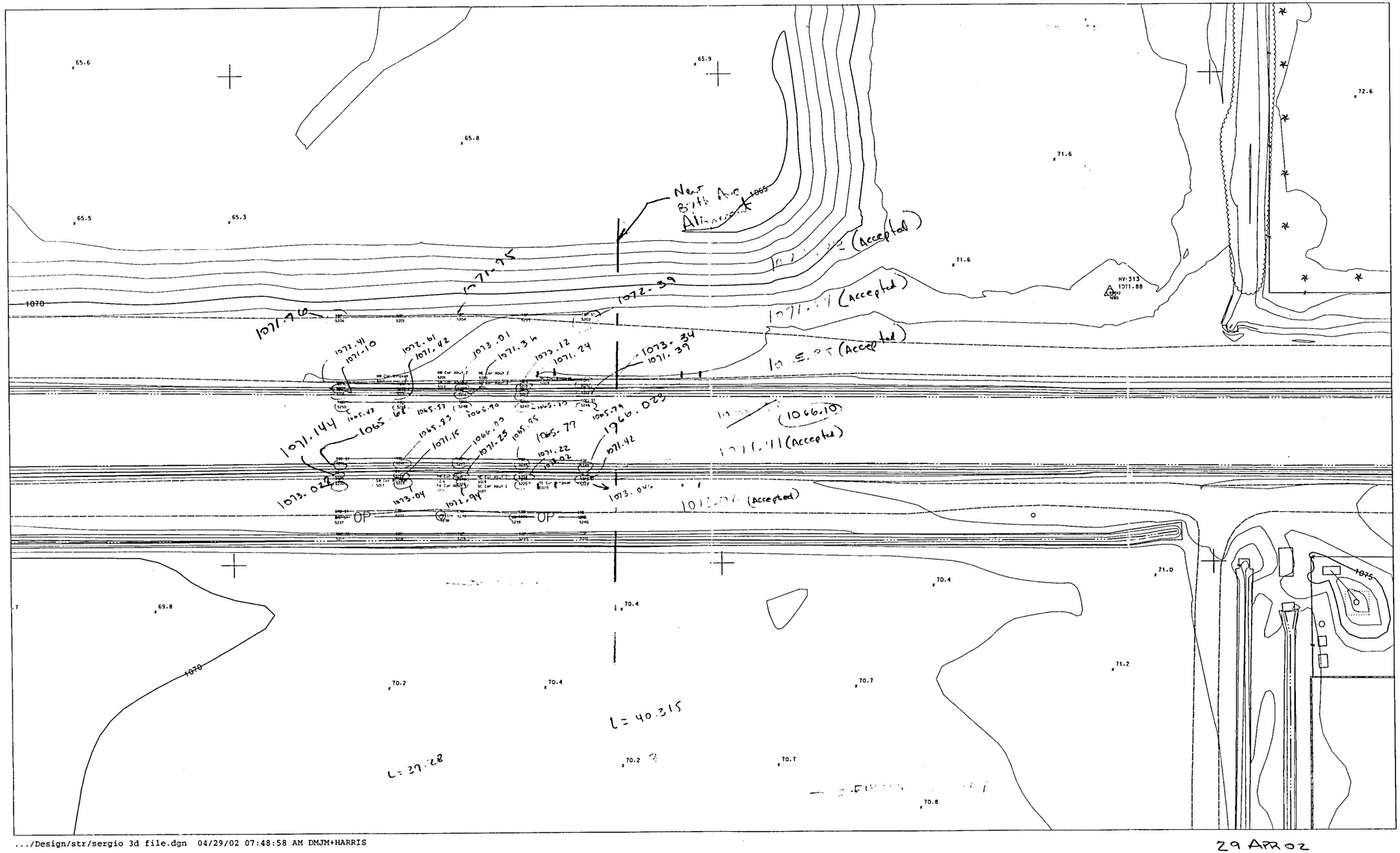

.../Design/str/sergio 3d file.dgn 04/29/02 07:48:58 AM DMJM+HARRIS

29 APR 02
GEO
40 SCALE

General Unit Definitions

$kips := 1000lbf$ $\quad pcf := \frac{lbf}{ft^3}$ $\quad CY := 27ft^3$ $\quad lf := ft$

$kcf := 1000pcf$ $\quad ksi := 1000psi$ $\quad sqft := ft^2$ $\quad sqyd := 9ft^2$

$wconc := 150pcf$ weight of concrete

Structural Quantities (f'c = 4000 psi) - CLASS AA

Includes:
- Abutment caps
- Backwalls
- Wingwalls
- Retaining Walls
- Approach slabs

Abutment 1

$abut1maincap := (1073.02ft - 1070.02ft)\cdot[12ft + 10in + 2\cdot(1ft + 11in)]\cdot(1ft + 9in + 11in + 14in)$

$abut1maincap = 7.1\,CY$

$abut1stem := [12ft + 10in + 2\cdot(1ft + 11in)]\cdot(14\cdot in\cdot 1.57\cdot ft) + 10\cdot ft\cdot 1.5\cdot ft\cdot 1\cdot ft + 2\cdot(10\cdot in)\cdot(1.57\cdot ft)\cdot(1\cdot ft + 9\cdot in + 11\cdot in)$

$abut1stem = 1.9\,CY$

$abut1wing := 2\cdot(68.13sqft)\cdot(14in)$

$abut1wing = 5.9\,CY$

$abut1retwall := (4.41\cdot sqft)\cdot(7\cdot ft)\cdot 2$

$abut1retwall = 2.3\,CY$

$fillets := 0.17\cdot CY$

$abut1TOTAL := abut1maincap + abut1stem + abut1wing + abut1retwall + fillets$ $\quad \boxed{abut1TOTAL = 17.4\,CY}$

Abutment 2

$abut2maincap := (1073.33ft - 1070.33ft)\cdot[12ft + 10in + 2\cdot(1ft + 11in)]\cdot(1ft + 9in + 11in + 14in)$

$abut2maincap = 7.1\,CY$

$abut2stem := [12ft + 10in + 2\cdot(1ft + 11in)]\cdot(14in\cdot 1.59\cdot ft) + 10\cdot ft\cdot 1.5\cdot ft\cdot 1\cdot ft + 2\cdot(10\cdot in)\cdot(1.59\cdot ft)\cdot(1\cdot ft + 9\cdot in + 11\cdot in)$

$abut2stem = 2\,CY$

$abut2wing := 2\cdot(68.31\cdot sqft)\cdot(14in)$

$abut2wing = 5.9\,CY$

Checked by: CAC
Date: 7/10/02

$abut2retwall := (4.50 \cdot sqft) \cdot (7 \cdot ft) \cdot 2$

$abut2retwall = 2.3\,CY$

$fillets = 0.17\,CY$

$abut2TOTAL := abut2maincap + abut2stem + abut2wing + abut2retwall + fillets$ $\boxed{abut2TOTAL = 17.5\,CY}$

Approach Slabs (2)

$apprslab := 2 \cdot 10ft \cdot 16 \cdot ft \cdot 1 \cdot ft$

$\boxed{apprslab = 11.9\,CY}$

Drilled Shafts

Abutment Drilled Shafts - ~~24~~ 30" ϕ

$Abut1shaft := 2 \cdot (1070.27ft - 1045.27ft)$ $Abut1shaft = 50\,lf$

$Abut2shaft := 2 \cdot (1070.58ft - 1045.58ft)$ $Abut2shaft = 50\,lf$

Shotcrete

$Abut1shot := 10sqyd$ $Abut1shot = 10\,sqyd$

$Abut2shot := 10sqyd$ $Abut2shot = 10\,sqyd$

Reinforcing Steel - by location - calculated utilzing spreadsheet

$reinfabut1 := 2414 \cdot lb$

$reinfabut2 := 2415 \cdot lb$

$reinfapprslab := 2192 \cdot lb$

$reinftotal := reinfabut1 + reinfabut2 + reinfapprslab$ $reinftotal = 7021\,lb$

Checked by: CAK
Date: 7/10/02

Concrete Painting

Wingwall and Retaining Walls

$Paint := 4 \cdot 18 \cdot ft \cdot (1.22 \cdot ft + 0.5 \cdot ft + 1.167 \cdot ft) + 4 \cdot 7 \cdot ft \cdot (0.75 \cdot ft + 0.5 \cdot ft + 0.8333 \cdot ft)$

$Paint = 266.2\,ft^2$

Excavation - Abutment 1

Excavation to include abutment cap, wingwalls, and retaining walls

Abutments

$abut1excv := [16ft + 8in + 2 \cdot (1ft + 6in)] \cdot (3ft) \cdot [1 \cdot (3.83 \cdot ft) + 2 \cdot (1ft + 6in)]$

$abut1excv = 14.9\,CY$

Wingwalls

$wing1excv := 2 \cdot [14in + 2 \cdot (1ft + 6in)] \cdot 2.58ft \cdot (18 \cdot ft - 1.5 \cdot ft)$

$wing1excv = 13.1\,CY$

$retwallexcv := 2 \cdot (7 \cdot ft + 1.5 \cdot ft) \cdot (2 \cdot ft) \cdot [3 \cdot ft + 2(1.5 \cdot ft)]$

$retwallexcv = 7.6\,CY$

$Total1EXCV := abut1excv + wing1excv + retwallexcv$

$\boxed{Total1EXCV = 35.6\,CY}$

Excavation - Abutment 2

Excavation to include abutment cap, wingwalls, and retaining walls.

Abutments

$abut2excv := [16ft + 8in + 2 \cdot (1ft + 6in)] \cdot (3ft) \cdot [1 \cdot (3.83 \cdot ft) + 2 \cdot (1ft + 6in)]$

$abut2excv = 14.9\,CY$

Wingwalls

$wing2excv := 2 \cdot [14in + 2 \cdot (1ft + 6in)] \cdot 2.57 \cdot ft \cdot (18.0ft - 1.5 \cdot ft)$

$wing2excv = 13.1\,CY$

$Total2EXCV := abut2excv + wing2excv + retwallexcv$

$\boxed{Total2EXCV = 35.6\,CY}$

Checked by: CAC
Date: 7/10/02

Backfill - Abutment 1

Abutments

$abut1back := (16ft + 8in)\cdot(3ft)\cdot(4.57ft)$

$abut1back = 8.5\,CY$

Approach Slab

$AppSlab1 := 1\cdot ft\cdot(16\cdot ft - 3\cdot ft)\cdot 10\cdot ft$

$AppSlab1 = 4.8\,CY$

Wingwalls

$wing1back := 2\cdot(3.79ft)\cdot(18\cdot ft)\cdot 3\cdot ft$

$wing1back = 15.2\,CY$

$retwallback := 2\cdot 3\cdot ft\cdot 2\cdot ft\cdot 7\cdot ft$

$retwallback = 3.1\,CY$

$Total1back := abut1back + wing1back + AppSlab1 + retwallback$

$\boxed{Total1back = 31.5\,CY}$

Backfill - Abutment 2

Abutments

$abut2back := (16ft + 8in)\cdot(3ft)\cdot(4.59ft)$

$abut2back = 8.5\,CY$

Approach Slab

$AppSlab2 := 1\cdot ft\cdot(16\cdot ft - 3\cdot ft)\cdot 10\cdot ft$

$AppSlab2 = 4.8\,CY$

Wingwalls

$wing2back := 2\cdot(3.80ft)\cdot(18\cdot ft)\cdot 3\cdot ft$

$wing2back = 15.2\,CY$

$Total2back := abut2back + wing2back + AppSlab2 + retwallback$

$\boxed{Total2back = 31.6\,CY}$

Checked by: CAL
Date: 7/10/02

Superstructure Steel

Sheet Description	Reinforcement (lbs)
TOTAL	lb

Abutment 1 Steel

Sheet Description	Reinforcement (lbs)
Abutment 1 Cap and Backwall	1042
Wingwalls and Retaining Walls	1372
Approach Slab	1096
TOTAL	3510 lb

Abutment 2 Steel

Sheet Description	Reinforcement (lbs)
Abutment 2 Cap and Backwall	1042
Wingwalls and Retaining Walls	1373
Approach Slab	1096
TOTAL	3511 lb

Pier Steel

Sheet Description	Reinforcement (lbs)
TOTAL	7021 lb

S-5.05 Abutment 1 Plan, Elevation & Section

Abutment Length = 16.670 ft

Bar Size	Metric or English?	Description	Bar Lengths - Enter in ft. or meters depending on unit system: Bend 1	Bend 2	Bend 3	Bend 4	Bend 5	Bend 6	# Laps	Lap length	Bar Space (ft)	# bars	Bar Wt. per ft. or m	Total Wt. lb or kg.
4	English	Stirrup Bottom section	3.500	2.500	0.670	0.670						12	0.668	59
4	English	Stirrup Top Section	3.500	0.670	0.670							12	0.668	39
5	English	Approach Slab Seat	2.500	0.670	1.830	1.170						11	1.043	71
4	English	U bars backwall	2.500	0.833	2.500							12	0.668	47
4	English	Bottom Cap - Cont.	16.340									4	0.668	44
8	English	Top Cap - Cont.	1.170	16.340	1.170							4	2.670	200
4	English	Abut Face - Cont.	16.340									1	0.668	11
6	English	Abut Face -Cont.	16.34									4	1.502	98
6	English	Backwall - Cont.	16.34									2	1.502	49
5	English	Backwall - Cont.	16.34									1	1.043	17
5	English	Approach Slab Seat - Cont.	9.67									2	1.043	20
5	English	Approach Slab Seat - Verts	1.750									11	1.043	20
4	English	Shear keys - Verts	4.240									12	0.668	34
4	English	Shear keys - Horiz.	3.500									14	0.668	33
8	English	Splice Bars to Wingwall	2.670	2.670								16	1.502	128
7	English	Splice Bars to Wingwall	2.670	2.670								4	2.044	44
5	English	Splice Bars to Wingwall	2.000	2.000	2.000							10	1.043	63
7	English	Backwall - Cont.	16.34									2	2.044	67
													#N/A	0
													#N/A	0
													#N/A	0
													#N/A	0
													#N/A	0
													#N/A	0
													#N/A	0
													#N/A	0
													#N/A	0
													#N/A	0
Note: Straight bars are indicated as having only one "bend." *** See Quantity Calculations													TOTAL	1042

5

0

6

S-5.05 Abutment 2 Plan, Elevation & Section

Abutment Length = 16.670 ft

Bar Size	Metric or English?	Description	Bar Lengths - Enter in ft. or meters depending on unit system: Bend 1	Bend 2	Bend 3	Bend 4	Bend 5	Bend 6	# Laps	Lap length	Bar Space (ft)	# bars	Bar Wt. per ft. or m	Total Wt. lb or kg.
4	English	Stirrup Bottom section	3.500	2.500	0.670	0.670						12	0.668	59
4	English	Stirrup Top Section	3.500	0.670	0.670							12	0.668	39
5	English	Approach Slab Seat	2.500	0.670	1.830	1.170						11	1.043	71
4	English	U bars backwall	2.500	0.833	2.500							12	0.668	47
4	English	Bottom Cap - Cont.	16.340									4	0.668	44
8	English	Top Cap - Cont.	1.170	16.340	1.170							4	2.670	200
4	English	Abut Face - Cont.	16.340									1	0.668	11
6	English	Abut Face -Cont.	16.34									4	1.502	98
6	English	Backwall - Cont.	16.34									2	1.502	49
5	English	Backwall - Cont.	16.34									1	1.043	17
5	English	Approach Slab Seat - Cont.	9.67									2	1.043	20
5	English	Approach Slab Seat - Verts	1.750									11	1.043	20
4	English	Shear keys - Verts	4.260									12	0.668	34
4	English	Shear keys - Hortz.	3.500									14	0.668	33
6	English	Splice Bars to Wingwall	2.670	2.670								16	1.502	128
7	English	Splice Bars to Wingwall	2.670	2.670								4	2.044	44
5	English	Splice Bars to Wingwall	2.000	2.000	2.000							10	1.043	63
7	English	Backwall - Cont.	16.34									2	2.044	67
													#N/A	0
													#N/A	0
													#N/A	0
													#N/A	0
													#N/A	0
													#N/A	0
													#N/A	0
													#N/A	0
													#N/A	0
													#N/A	0
Note: Straight bars are indicated as having only one "bend." *** See Quantity Calculations													TOTAL	1042

S-5.06 Wingwalls Abutment 1

Wingwall Length = 18.000 ft

Bar Size	Metric or English?	Description	Bar Lengths - Enter in ft. or meters depending on unit system								Bar Space (ft)	# bars	Bar Wt. per ft. or m	Total Wt. lb or kg.
			Bend 1	Bend 2	Bend 3	Bend 4	Bend 5	Bend 6	# Laps	Lap length				
8	English	Top -Cont.	17.670									4	2.670	189
6	English	Wall - Cont.	17.670									16	1.502	425
5	English	Wall - Cont.	17.670									10	1.043	184
4	English	U Bars	2.500	0.833	2.500							26	0.668	101
5	English	Verts	3.460									52	1.043	188
													#N/A	0
													#N/A	0
													#N/A	0
													#N/A	0
													#N/A	0
													#N/A	0
													#N/A	0
													#N/A	0
													#N/A	0
													#N/A	0
													#N/A	0
													#N/A	0
													#N/A	0
													#N/A	0
													#N/A	0
													#N/A	0
													#N/A	0
													#N/A	0
													#N/A	0
													#N/A	0
													#N/A	0
													#N/A	0
													#N/A	0
Note: Straight bars are indicated as having only one "bend." *** See Quantity Calculations													TOTAL	1087

S-5.06 Wingwalls Abutment 2

Wingwall Length = 18.000 ft

Bar Size	Metric or English?	Description	Bar Lengths - Enter in ft. or meters depending on unit system: Bend 1	Bend 2	Bend 3	Bend 4	Bend 5	Bend 6	# Laps	Lap length	Bar Space (ft)	# bars	Bar Wt. per ft. or m	Total Wt. lb or kg.
8	English	Top -Cont.	17.670									4	2.670	189
6	English	Wall - Cont.	17.670									16	1.502	425
5	English	Wall - Cont.	17.670									10	1.043	184
4	English	U Bars	2.500	0.833	2.500							26	0.668	101
5	English	Verts	3.470									52	1.043	188
													#N/A	0
													#N/A	0
													#N/A	0
													#N/A	0
													#N/A	0
													#N/A	0
													#N/A	0
													#N/A	0
													#N/A	0
													#N/A	0
													#N/A	0
													#N/A	0
													#N/A	0
													#N/A	0
													#N/A	0
													#N/A	0
													#N/A	0
													#N/A	0
													#N/A	0
													#N/A	0
													#N/A	0
													#N/A	0
													#N/A	0
													#N/A	0
													#N/A	0
													#N/A	0
													TOTAL	1087

Note: Straight bars are indicated as having only one "bend." *** See Quantity Calculations

S-5.06 Retaining Walls Abutment 1

RW Length = 7.000 ft

			Bar Lengths - Enter in ft. or meters depending on unit system								Bar		Bar Wt.	Total Wt.
Bar Size	Metric or English?	Description	Bend 1	Bend 2	Bend 3	Bend 4	Bend 5	Bend 6	# Laps	Lap length	Space (ft)	# bars	per ft. or m	lb or kg.
5	English	Ftg into Wall Verts	2.000	2.583								16	1.043	76
4	English	Wall Verts	2.583									12	0.668	21
5	English	Top Transverse Bars Ftg	2.667									20	1.043	56
5	English	Ftg- Long.	6.667									14	1.043	97
4	English	Wall - Cont.	6.667									8	0.668	36
													#N/A	0
													#N/A	0
													#N/A	0
													#N/A	0
													#N/A	0
													#N/A	0
													#N/A	0
													#N/A	0
													#N/A	0
													#N/A	0
													#N/A	0
													#N/A	0
													#N/A	0
													#N/A	0
													#N/A	0
													#N/A	0
													#N/A	0
													#N/A	0
													#N/A	0
													#N/A	0
													#N/A	0
													#N/A	0
													#N/A	0
Note: Straight bars are indicated as having only one "bend." *** See Quantity Calculations													TOTAL	286

S-5.06 Retaining Walls Abutment2

RW Length = 7.000 ft

Bar Size	Metric or English?	Description	Bar Lengths - Enter in ft. or meters depending on unit system: Bend 1	Bend 2	Bend 3	Bend 4	Bend 5	Bend 6	# Laps	Lap length	Bar Space (ft)	# bars	Bar Wt. per ft. or m	Total Wt. lb or kg.
5	English	Ftg into Wall Verts	2.000	2.583								16	1.043	76
4	English	Wall Verts	2.583									12	0.668	21
5	English	Top Transverse Bars Ftg	2.667									20	1.043	56
5	English	Ftg- Long.	6.667									14	1.043	97
4	English	Wall - Cont.	6.667									8	0.668	36
													#N/A	0
													#N/A	0
													#N/A	0
													#N/A	0
													#N/A	0
													#N/A	0
													#N/A	0
													#N/A	0
													#N/A	0
													#N/A	0
													#N/A	0
													#N/A	0
													#N/A	0
													#N/A	0
													#N/A	0
													#N/A	0
													#N/A	0
													#N/A	0
													#N/A	0
													#N/A	0
													#N/A	0
													#N/A	0
													#N/A	0
Note: Straight bars are indicated as having only one "bend." *** See Quantity Calculations													TOTAL	286

3)
on
6)

S-5.06 Approach Slab 1

Approach Slab Lengtl 16.000 ft

Bar Size	Metric or English?	Description	Bend 1	Bend 2	Bend 3	Bend 4	Bend 5	Bend 6	# Laps	Lap length	Bar Space (ft)	# bars	Bar Wt. per ft. or m	Total Wt. lb or kg.
			Bar Lengths - Enter in ft. or meters depending on unit system											
4	English	Top Long.	15.667									8	0.668	84
8	English	Bott Long.	15.670									15	2.670	628
4	English	U Bars	1.000	0.540	1.000							8	0.668	14
4	English	U Bars	4.000	0.540	0.750							8	0.668	28
5	English	Top and Bottom Transverse	9.667									34	1.043	343
													#N/A	0
													#N/A	0
													#N/A	0
													#N/A	0
													#N/A	0
													#N/A	0
													#N/A	0
													#N/A	0
													#N/A	0
													#N/A	0
													#N/A	0
													#N/A	0
													#N/A	0
													#N/A	0
													#N/A	0
													#N/A	0
													#N/A	0
													#N/A	0
													#N/A	0
													#N/A	0
													#N/A	0
													#N/A	0
													#N/A	0
Note: Straight bars are indicated as having only one "bend." *** See Quantity Calculations													TOTAL	1096

S-5.06 Approach Slab 2

Approach Slab Lengt 16.000 ft

Bar Size	Metric or English?	Description	Bar Lengths - Enter in ft. or meters depending on unit system Bend 1	Bend 2	Bend 3	Bend 4	Bend 5	Bend 6	# Laps	Lap length	Bar Space (ft)	# bars	Bar Wt. per ft. or m	Total Wt. lb or kg.
4	English	Top Long.	15.667									8	0.668	84
8	English	Bott Long.	15.670									15	2.670	628
4	English	U Bars	1.000	0.540	1.000							8	0.668	14
4	English	U Bars	4.000	0.540	0.750							8	0.668	28
5	English	Top and Bottom Transverse	9.667									34	1.043	343
													#N/A	0
													#N/A	0
													#N/A	0
													#N/A	0
													#N/A	0
													#N/A	0
													#N/A	0
													#N/A	0
													#N/A	0
													#N/A	0
													#N/A	0
													#N/A	0
													#N/A	0
													#N/A	0
													#N/A	0
													#N/A	0
													#N/A	0
													#N/A	0
													#N/A	0
													#N/A	0
													#N/A	0
													#N/A	0
													#N/A	0
Note: Straight bars are indicated as having only one "bend." *** See Quantity Calculations													TOTAL	1096

Input verification only
DPC 6/02

```
**************************************************
*                                                *
*           STAAD.Pro                            *
*           Version  2001    Build 1005          *
*           Proprietary Program of               *
*           RESEARCH ENGINEERS, Intl.            *
*           Date=    JUL  8, 2002                *
*           Time=    13:24:46                    *
*                                                *
*      USER ID: Frederic R. Harris, Inc.         *
**************************************************
```

```
 1. STAAD SPACE ABUTMENTS
 2. START JOB INFORMATION
 3. JOB NAME BHOC - 87TH PED BRIDGE
 4. JOB CLIENT FCD
 5. JOB NO 046106888.0020
 6. JOB COMMENT ABUT ANALYSIS
 7. ENGINEER NAME SEO
 8. ENGINEER DATE JUN-02
 9. END JOB INFORMATION
10. INPUT WIDTH 79
11. UNIT FEET KIP
12. JOINT COORDINATES
13. 1 0 1071.52 0; 2 18 1071.52 0; 3 19.9167 1071.52 0; 4 32.75 1071.52 0
14. 5 34.67 1071.52 0; 6 52.67 1071.52 0; 7 19.9166 1056.2 0; 8 32.75 1056.2 0
15. MEMBER INCIDENCES
16. 1 1 2; 2 2 3; 3 3 4; 4 4 5; 5 5 6; 6 3 7; 7 4 8
17. MEMBER PROPERTY AMERICAN
18. 1 5 PRIS YD 3.75 ZD 1.17
19. 2 TO 4 PRIS YD 3 ZD 3.83
20. 6 7 PRIS YD 2.5
21. UNIT INCHES KIP
22. CONSTANTS
23. E 3605 MEMB 1 TO 7
24. POISSON 0.17 MEMB 1 TO 7
25. DENSITY 8.68E-005 MEMB 1 TO 7
26. ALPHA 6.5E-006 MEMB 1 TO 7
27. UNIT FEET KIP
28. SUPPORTS
29. 7 8 FIXED
30. LOAD 1 DL AND SDL - SUPER
31. MEMBER LOAD
32. 1 5 UNI GY -0.66
33. 2 TO 4 UNI GY -2.30
34. 2 TO 4 UMOM GX -1.19
35. 6 7 UNI GY -0.74
36. JOINT LOAD
37. 3 4 FY -14.40
38. 2 5 MX -17.88
39. LOAD 2 EXCLUSION OF SUPERSTRUCTURE DEAD LOAD
40. JOINT LOAD
41. 3 4 FY 14.40
```

```
42. LOAD 3 LIVE LOAD
43. JOINT LOAD
44. 3 4 FY -10.40
45. LOAD 4 EARTH PRESSURE
46. MEMBER LOAD
47. 1 5 UNI GZ 0.51
48. 2 TO 4 UNI GZ 0.61
49. LOAD 5 WIND ON SUPERSTRUCTURE
50. JOINT LOAD
51. 3 4 FX 4.30
52. 3 FY 7.63
53. 4 FY -1.53
54. LOAD 6 RST
55. JOINT LOAD
56. 3 4 FZ 1.23
57. 2 5 MX 1.85
58. LOAD COMB 7 SERVICE LOAD GROUP I
59. 1 1.0 3 1.0 4 1.0
60. LOAD COMB 8 SERVICE LOAD GROUP II
61. 1 0.8 4 0.8 5 0.8
62. LOAD COMB 9 SERVICE LOAD GROUP III
63. 1 0.8 3 0.8 4 0.8 5 0.24
64. LOAD COMB 10 SERVICE LOAD GROUP IV
65. 1 0.8 3 0.8 4 0.8 6 0.8
66. LOAD COMB 11 GROUP V
67. 1 0.72 4 0.72 5 0.72 6 0.72
68. LOAD COMB 12 GROUP VI
69. 1 0.72 3 0.72 4 0.72 5 0.22 6 0.72
70. LOAD COMB 13 GROUP I WITHOUT SUPERSTRUCTURE LOADING
71. 1 1.0 2 1.0 4 1.0
72. PERFORM ANALYSIS


        P R O B L E M   S T A T I S T I C S
        -----------------------------------

  NUMBER OF JOINTS/MEMBER+ELEMENTS/SUPPORTS =     8/     7/     2
  ORIGINAL/FINAL BAND-WIDTH=     4/     4/     12 DOF
  TOTAL PRIMARY LOAD CASES =    6, TOTAL DEGREES OF FREEDOM =     36
  SIZE OF STIFFNESS MATRIX =       1 DOUBLE  KILO-WORDS
  REQRD/AVAIL. DISK SPACE  =    12.0/   727.2 MB,  EXMEM =  877.8 MB

++ Processing Element Stiffness Matrix.              13:24:46
++ Processing Global Stiffness Matrix.               13:24:46
++ Processing Triangular Factorization.              13:24:46
++ Calculating Joint Displacements.                  13:24:46
++ Calculating Member  Forces.                       13:24:46

73. LOAD LIST ALL
74. PRINT ANALYSIS RESULTS
```

JOINT DISPLACEMENT (INCH RADIANS) STRUCTURE TYPE = SPACE

JOINT	LOAD	X-TRANS	Y-TRANS	Z-TRANS	X-ROTAN	Y-ROTAN	Z-ROTAN
1	1	-0.00003	-0.08186	-0.03933	-0.00044	0.00000	0.00040
	2	0.00000	0.00104	0.00000	0.00000	0.00000	0.00000
	3	0.00000	-0.00075	0.00000	0.00000	0.00000	0.00000
	4	0.00000	0.00000	0.54330	0.00168	0.00201	0.00000
	5	0.01874	0.00713	0.00000	0.00000	0.00000	-0.00003
	6	0.00000	0.00000	0.02062	0.00017	0.00000	0.00000
	7	-0.00003	-0.08261	0.50397	0.00124	0.00201	0.00040
	8	0.01497	-0.05978	0.40318	0.00100	0.00161	0.00030
	9	0.00447	-0.06437	0.40318	0.00100	0.00161	0.00031
	10	-0.00003	-0.06608	0.41967	0.00114	0.00161	0.00032
	11	0.01347	-0.05381	0.37771	0.00102	0.00145	0.00027
	12	0.00410	-0.05791	0.37771	0.00102	0.00145	0.00028
	13	-0.00003	-0.08082	0.50397	0.00124	0.00201	0.00040
2	1	-0.00003	-0.00694	-0.03933	-0.00044	0.00000	0.00016
	2	0.00000	0.00104	0.00000	0.00000	0.00000	0.00000
	3	0.00000	-0.00075	0.00000	0.00000	0.00000	0.00000
	4	0.00000	0.00000	0.21098	0.00168	0.00010	0.00000
	5	0.01874	0.00150	0.00000	0.00000	0.00000	-0.00003
	6	0.00000	0.00000	0.02062	0.00017	0.00000	0.00000
	7	-0.00003	-0.00769	0.17166	0.00124	0.00010	0.00016
	8	0.01497	-0.00435	0.13733	0.00100	0.00008	0.00011
	9	0.00447	-0.00579	0.13733	0.00100	0.00008	0.00012
	10	-0.00003	-0.00615	0.15382	0.00114	0.00008	0.00013
	11	0.01347	-0.00391	0.13844	0.00102	0.00007	0.00010
	12	0.00410	-0.00520	0.13844	0.00102	0.00007	0.00011
	13	-0.00003	-0.00590	0.17166	0.00124	0.00010	0.00016
3	1	-0.00003	-0.00369	-0.03933	-0.00043	0.00000	0.00011
	2	0.00000	0.00104	0.00000	0.00000	0.00000	0.00000
	3	0.00000	-0.00075	0.00000	0.00000	0.00000	0.00000
	4	0.00000	0.00000	0.20880	0.00168	0.00008	0.00000
	5	0.01874	0.00090	0.00000	0.00000	0.00000	-0.00003
	6	0.00000	0.00000	0.02062	0.00017	0.00000	0.00000
	7	-0.00003	-0.00444	0.16948	0.00125	0.00008	0.00011
	8	0.01497	-0.00223	0.13558	0.00100	0.00006	0.00007
	9	0.00447	-0.00333	0.13558	0.00100	0.00006	0.00008
	10	-0.00003	-0.00355	0.15208	0.00114	0.00006	0.00009
	11	0.01347	-0.00201	0.13687	0.00103	0.00006	0.00006
	12	0.00410	-0.00300	0.13687	0.00103	0.00006	0.00007
	13	-0.00003	-0.00265	0.16948	0.00125	0.00008	0.00011
4	1	0.00004	-0.00369	-0.03933	-0.00043	0.00000	-0.00011
	2	0.00000	0.00104	0.00000	0.00000	0.00000	0.00000
	3	0.00000	-0.00075	0.00000	0.00000	0.00000	0.00000
	4	0.00000	0.00000	0.20883	0.00168	-0.00008	0.00000
	5	0.01874	-0.00046	0.00000	0.00000	0.00000	-0.00003
	6	0.00000	0.00000	0.02062	0.00017	0.00000	0.00000
	7	0.00004	-0.00444	0.16950	0.00125	-0.00008	-0.00011
	8	0.01502	-0.00332	0.13560	0.00100	-0.00006	-0.00011
	9	0.00453	-0.00366	0.13560	0.00100	-0.00006	-0.00009

SAY STAADPRO MOD IS OK - COMPARED - L-PILE.

JOINT DISPLACEMENT (INCH RADIANS) STRUCTURE TYPE = SPACE

JOINT	LOAD	X-TRANS	Y-TRANS	Z-TRANS	X-ROTAN	Y-ROTAN	Z-ROTAN
	10	0.00003	-0.00355	0.15210	0.00114	-0.00006	-0.00009
	11	0.01352	-0.00299	0.13689	0.00103	-0.00006	-0.00010
	12	0.00415	-0.00330	0.13689	0.00103	-0.00006	-0.00008
	13	0.00004	-0.00265	0.16950	0.00125	-0.00008	-0.00011
5	1	0.00004	-0.00694	-0.03933	-0.00044	0.00000	-0.00016
	2	0.00000	0.00104	0.00000	0.00000	0.00000	0.00000
	3	0.00000	-0.00075	0.00000	0.00000	0.00000	0.00000
	4	0.00000	0.00000	0.21102	0.00168	-0.00010	0.00000
	5	0.01874	-0.00106	0.00000	0.00000	0.00000	-0.00003
	6	0.00000	0.00000	0.02062	0.00017	0.00000	0.00000
	7	0.00004	-0.00769	0.17169	0.00124	-0.00010	-0.00016
	8	0.01502	-0.00641	0.13735	0.00100	-0.00008	-0.00015
	9	0.00453	-0.00641	0.13735	0.00100	-0.00008	-0.00013
	10	0.00003	-0.00616	0.15385	0.00114	-0.00008	-0.00013
	11	0.01352	-0.00576	0.13847	0.00102	-0.00007	-0.00013
	12	0.00415	-0.00577	0.13847	0.00102	-0.00007	-0.00012
	13	0.00004	-0.00591	0.17169	0.00124	-0.00010	-0.00016
6	1	0.00004	-0.08189	-0.03933	-0.00044	0.00000	-0.00040
	2	0.00000	0.00104	0.00000	0.00000	0.00000	0.00000
	3	0.00000	-0.00075	0.00000	0.00000	0.00000	0.00000
	4	0.00000	0.00000	0.54341	0.00168	-0.00201	0.00000
	5	0.01874	-0.00669	0.00000	0.00000	0.00000	-0.00003
	6	0.00000	0.00000	0.02062	0.00017	0.00000	0.00000
	7	0.00004	-0.08265	0.50408	0.00124	-0.00201	-0.00040
	8	0.01502	-0.07087	0.40326	0.00100	-0.00161	-0.00034
	9	0.00453	-0.06772	0.40326	0.00100	-0.00161	-0.00033
	10	0.00003	-0.06612	0.41976	0.00114	-0.00161	-0.00032
	11	0.01352	-0.06378	0.37778	0.00102	-0.00145	-0.00031
	12	0.00415	-0.06098	0.37778	0.00102	-0.00145	-0.00029
	13	0.00004	-0.08086	0.50408	0.00124	-0.00201	-0.00040
7	1	0.00000	0.00000	0.00000	0.00000	0.00000	0.00000
	2	0.00000	0.00000	0.00000	0.00000	0.00000	0.00000
	3	0.00000	0.00000	0.00000	0.00000	0.00000	0.00000
	4	0.00000	0.00000	0.00000	0.00000	0.00000	0.00000
	5	0.00000	0.00000	0.00000	0.00000	0.00000	0.00000
	6	0.00000	0.00000	0.00000	0.00000	0.00000	0.00000
	7	0.00000	0.00000	0.00000	0.00000	0.00000	0.00000
	8	0.00000	0.00000	0.00000	0.00000	0.00000	0.00000
	9	0.00000	0.00000	0.00000	0.00000	0.00000	0.00000
	10	0.00000	0.00000	0.00000	0.00000	0.00000	0.00000
	11	0.00000	0.00000	0.00000	0.00000	0.00000	0.00000
	12	0.00000	0.00000	0.00000	0.00000	0.00000	0.00000
	13	0.00000	0.00000	0.00000	0.00000	0.00000	0.00000
8	1	0.00000	0.00000	0.00000	0.00000	0.00000	0.00000
	2	0.00000	0.00000	0.00000	0.00000	0.00000	0.00000
	3	0.00000	0.00000	0.00000	0.00000	0.00000	0.00000
	4	0.00000	0.00000	0.00000	0.00000	0.00000	0.00000
	5	0.00000	0.00000	0.00000	0.00000	0.00000	0.00000

JOINT DISPLACEMENT (INCH RADIANS) STRUCTURE TYPE = SPACE

JOINT	LOAD	X-TRANS	Y-TRANS	Z-TRANS	X-ROTAN	Y-ROTAN	Z-ROTAN
	6	0.00000	0.00000	0.00000	0.00000	0.00000	0.00000
	7	0.00000	0.00000	0.00000	0.00000	0.00000	0.00000
	8	0.00000	0.00000	0.00000	0.00000	0.00000	0.00000
	9	0.00000	0.00000	0.00000	0.00000	0.00000	0.00000
	10	0.00000	0.00000	0.00000	0.00000	0.00000	0.00000
	11	0.00000	0.00000	0.00000	0.00000	0.00000	0.00000
	12	0.00000	0.00000	0.00000	0.00000	0.00000	0.00000
	13	0.00000	0.00000	0.00000	0.00000	0.00000	0.00000

SUPPORT REACTIONS -UNIT KIP FEET STRUCTURE TYPE = SPACE

JOINT	LOAD	FORCE-X	FORCE-Y	FORCE-Z	MOM-X	MOM-Y	MOM Z
7	1	-2.61	56.78	0.00	27.80	0.00	12.93
	2	0.00	-14.40	0.00	0.00	0.00	0.00
	3	0.00	10.40	0.00	0.00	0.00	0.00
	4	0.00	0.00	-14.26	-218.51	-4.32	0.00
	5	-4.30	-12.50	0.00	0.00	0.00	34.63
	6	0.00	0.00	-1.23	-20.69	0.00	0.00
	7	-2.61	67.18	-14.26	-190.71	-4.32	12.93
	8	-5.52	35.42	-11.41	-152.57	-3.46	38.05
	9	-3.12	50.74	-11.41	-152.57	-3.46	18.66
	10	-2.08	53.74	-12.39	-169.12	-3.46	10.35
	11	-4.97	31.88	-11.15	-152.21	-3.11	34.25
	12	-2.82	45.62	-11.15	-152.21	-3.11	16.93
	13	-2.61	42.38	-14.26	-190.71	-4.32	12.93
8	1	2.61	56.80	0.00	27.80	0.00	-12.93
	2	0.00	-14.40	0.00	0.00	0.00	0.00
	3	0.00	10.40	0.00	0.00	0.00	0.00
	4	0.00	0.00	-14.27	-218.55	4.34	0.00
	5	-4.30	6.40	0.00	0.00	0.00	34.63
	6	0.00	0.00	-1.23	-20.69	0.00	0.00
	7	2.61	67.20	-14.27	-190.75	4.34	-12.93
	8	-1.36	50.56	-11.41	-152.60	3.47	17.36
	9	1.05	55.29	-11.41	-152.60	3.47	-2.03
	10	2.08	53.76	-12.40	-169.16	3.47	-10.35
	11	-1.22	45.50	-11.16	-152.24	3.13	15.62
	12	0.93	49.79	-11.16	-152.24	3.13	-1.69
	13	2.61	42.40	-14.27	-190.75	4.34	-12.93

MEMBER END FORCES STRUCTURE TYPE = SPACE

ALL UNITS ARE -- KIP FEET

MEMBER	LOAD	JT	AXIAL	SHEAR-Y	SHEAR-Z	TORSION	MOM-Y	MOM-Z
1	1	1	0.00	0.00	0.00	0.00	0.00	0.00
		2	0.00	11.88	0.00	0.00	0.00	-106.92
	2	1	0.00	0.00	0.00	0.00	0.00	0.00
		2	0.00	0.00	0.00	0.00	0.00	0.00
	3	1	0.00	0.00	0.00	0.00	0.00	0.00
		2	0.00	0.00	0.00	0.00	0.00	0.00
	4	1	0.00	0.00	0.00	0.00	0.00	0.00
		2	0.00	0.00	-9.18	0.00	-82.62	0.00
	5	1	0.00	0.00	0.00	0.00	0.00	0.00
		2	0.00	0.00	0.00	0.00	0.00	0.00
	6	1	0.00	0.00	0.00	0.00	0.00	0.00
		2	0.00	0.00	0.00	0.00	0.00	0.00
	7	1	0.00	0.00	0.00	0.00	0.00	0.00
		2	0.00	11.88	-9.18	0.00	-82.62	-106.92
	8	1	0.00	0.00	0.00	0.00	0.00	0.00
		2	0.00	9.50	-7.34	0.00	-66.10	-85.54
	9	1	0.00	0.00	0.00	0.00	0.00	0.00
		2	0.00	9.50	-7.34	0.00	-66.10	-85.54
	10	1	0.00	0.00	0.00	0.00	0.00	0.00
		2	0.00	9.50	-7.34	0.00	-66.10	-85.54
	11	1	0.00	0.00	0.00	0.00	0.00	0.00
		2	0.00	8.55	-6.61	0.00	-59.49	-76.98
	12	1	0.00	0.00	0.00	0.00	0.00	0.00
		2	0.00	8.55	-6.61	0.00	-59.49	-76.98
	13	1	0.00	0.00	0.00	0.00	0.00	0.00
		2	0.00	11.88	-9.18	0.00	-82.62	-106.92
2	1	2	0.00	-11.88	0.00	-17.88	0.00	106.92
		3	0.00	16.29	0.00	20.16	0.00	-133.92
	2	2	0.00	0.00	0.00	0.00	0.00	0.00
		3	0.00	0.00	0.00	0.00	0.00	0.00
	3	2	0.00	0.00	0.00	0.00	0.00	0.00
		3	0.00	0.00	0.00	0.00	0.00	0.00
	4	2	0.00	0.00	9.18	0.00	82.62	0.00
		3	0.00	0.00	-10.35	0.00	-101.34	0.00
	5	2	0.00	0.00	0.00	0.00	0.00	0.00
		3	0.00	0.00	0.00	0.00	0.00	0.00
	6	2	0.00	0.00	0.00	1.85	0.00	0.00
		3	0.00	0.00	0.00	-1.85	0.00	0.00
	7	2	0.00	-11.88	9.18	-17.88	82.62	106.92
		3	0.00	16.29	-10.35	20.16	-101.34	-133.92
	8	2	0.00	-9.50	7.34	-14.30	66.10	85.54
		3	0.00	13.03	-8.28	16.13	-81.07	-107.13
	9	2	0.00	-9.50	7.34	-14.30	66.10	85.54
		3	0.00	13.03	-8.28	16.13	-81.07	-107.13

MEMBER END FORCES STRUCTURE TYPE = SPACE

ALL UNITS ARE -- KIP FEET

MEMBER	LOAD	JT	AXIAL	SHEAR-Y	SHEAR-Z	TORSION	MOM-Y	MOM-Z
	10	2	0.00	-9.50	7.34	-12.82	66.10	85.54
		3	0.00	13.03	-8.28	14.65	-81.07	-107.13
	11	2	0.00	-8.55	6.61	-11.54	59.49	76.98
		3	0.00	11.73	-7.45	13.18	-72.96	-96.42
	12	2	0.00	-8.55	6.61	-11.54	59.49	76.98
		3	0.00	11.73	-7.45	13.18	-72.96	-96.42
	13	2	0.00	-11.88	9.18	-17.88	82.62	-106.92
		3	0.00	16.29	-10.35	20.16	-101.34	-133.92
3	1	3	-2.61	14.75	0.00	7.64	0.00	106.93
		4	2.61	14.76	0.00	7.63	0.00	-106.98
	2	3	0.00	0.00	0.00	0.00	0.00	0.00
		4	0.00	0.00	0.00	0.00	0.00	0.00
	3	3	0.00	0.00	0.00	0.00	0.00	0.00
		4	0.00	0.00	0.00	0.00	0.00	0.00
	4	3	0.00	0.00	-3.91	-0.02	97.01	0.00
		4	0.00	0.00	-3.92	0.02	-97.03	0.00
	5	3	0.00	-4.87	0.00	0.00	0.00	-31.25
		4	0.00	4.87	0.00	0.00	0.00	-31.25
	6	3	0.00	0.00	0.00	0.00	0.00	0.00
		4	0.00	0.00	0.00	0.00	0.00	0.00
	7	3	-2.61	14.75	-3.91	7.62	97.01	106.93
		4	2.61	14.76	-3.92	7.65	-97.03	-106.98
	8	3	-2.08	7.91	-3.13	6.10	77.61	60.55
		4	2.08	15.71	-3.13	6.12	-77.62	-110.58
	9	3	-2.08	10.63	-3.13	6.10	77.61	78.05
		4	2.08	12.98	-3.13	6.12	-77.62	-93.09
	10	3	-2.08	11.80	-3.13	6.10	77.61	85.55
		4	2.08	11.81	-3.13	6.12	-77.62	-85.59
	11	3	-1.88	7.12	-2.82	5.49	69.85	54.49
		4	1.88	14.13	-2.82	5.51	-69.86	-99.52
	12	3	-1.88	9.55	-2.82	5.49	69.85	70.12
		4	1.88	11.70	-2.82	5.51	-69.86	-83.90
	13	3	-2.61	14.75	-3.91	7.62	97.01	106.93
		4	2.61	14.76	-3.92	7.65	-97.03	-106.98
4	1	4	0.00	16.30	0.00	20.16	0.00	133.97
		5	0.00	-11.88	0.00	-17.88	0.00	-106.92
	2	4	0.00	0.00	0.00	0.00	0.00	0.00
		5	0.00	0.00	0.00	0.00	0.00	0.00
	3	4	0.00	0.00	0.00	0.00	0.00	0.00
		5	0.00	0.00	0.00	0.00	0.00	0.00
	4	4	0.00	0.00	-10.35	0.00	101.37	0.00
		5	0.00	0.00	9.18	0.00	-82.62	0.00
	5	4	0.00	0.00	0.00	0.00	0.00	0.00
		5	0.00	0.00	0.00	0.00	0.00	0.00
	6	4	0.00	0.00	0.00	-1.85	0.00	0.00
		5	0.00	0.00	0.00	1.85	0.00	0.00

MEMBER END FORCES STRUCTURE TYPE = SPACE

ALL UNITS ARE -- KIP FEET

MEMBER	LOAD	JT	AXIAL	SHEAR-Y	SHEAR-Z	TORSION	MOM-Y	MOM-Z
	7	4	0.00	16.30	-10.35	20.16	101.37	133.97
		5	0.00	-11.88	9.18	-17.88	-82.62	-106.92
	8	4	0.00	13.04	-8.28	16.13	81.10	107.18
		5	0.00	-9.50	7.34	-14.30	-66.10	-85.54
	9	4	0.00	13.04	-8.28	16.13	81.10	107.18
		5	0.00	-9.50	7.34	-14.30	-66.10	-85.54
	10	4	0.00	13.04	-8.28	14.65	81.10	107.18
		5	0.00	-9.50	7.34	-12.82	-66.10	-85.54
	11	4	0.00	11.73	-7.45	13.19	72.99	96.46
		5	0.00	-8.55	6.61	-11.54	-59.49	-76.98
	12	4	0.00	11.73	-7.45	13.19	72.99	96.46
		5	0.00	-8.55	6.61	-11.54	-59.49	-76.98
	13	4	0.00	16.30	-10.35	20.16	101.37	133.97
		5	0.00	-11.88	9.18	-17.88	-82.62	-106.92
5	1	5	0.00	11.88	0.00	0.00	0.00	106.92
		6	0.00	0.00	0.00	0.00	0.00	0.00
	2	5	0.00	0.00	0.00	0.00	0.00	0.00
		6	0.00	0.00	0.00	0.00	0.00	0.00
	3	5	0.00	0.00	0.00	0.00	0.00	0.00
		6	0.00	0.00	0.00	0.00	0.00	0.00
	4	5	0.00	0.00	-9.18	0.00	82.62	0.00
		6	0.00	0.00	0.00	0.00	0.00	0.00
	5	5	0.00	0.00	0.00	0.00	0.00	0.00
		6	0.00	0.00	0.00	0.00	0.00	0.00
	6	5	0.00	0.00	0.00	0.00	0.00	0.00
		6	0.00	0.00	0.00	0.00	0.00	0.00
	7	5	0.00	11.88	-9.18	0.00	82.62	106.92
		6	0.00	0.00	0.00	0.00	0.00	0.00
	8	5	0.00	9.50	-7.34	0.00	66.10	85.54
		6	0.00	0.00	0.00	0.00	0.00	0.00
	9	5	0.00	9.50	-7.34	0.00	66.10	85.54
		6	0.00	0.00	0.00	0.00	0.00	0.00
	10	5	0.00	9.50	-7.34	0.00	66.10	85.54
		6	0.00	0.00	0.00	0.00	0.00	0.00
	11	5	0.00	8.55	-6.61	0.00	59.49	76.98
		6	0.00	0.00	0.00	0.00	0.00	0.00
	12	5	0.00	8.55	-6.61	0.00	59.49	76.98
		6	0.00	0.00	0.00	0.00	0.00	0.00
	13	5	0.00	11.88	-9.18	0.00	82.62	106.92
		6	0.00	0.00	0.00	0.00	0.00	0.00
6	1	3	45.44	2.61	0.00	0.00	-27.80	26.98
		7	-56.78	-2.61	0.00	0.00	27.80	12.93
	2	3	-14.40	0.00	0.00	0.00	0.00	0.00
		7	14.40	0.00	0.00	0.00	0.00	0.00
	3	3	10.40	0.00	0.00	0.00	0.00	0.00
		7	-10.40	0.00	0.00	0.00	0.00	0.00

MEMBER END FORCES STRUCTURE TYPE = SPACE

ALL UNITS ARE -- KIP FEET

MEMBER	LOAD	JT	AXIAL	SHEAR-Y	SHEAR-Z	TORSION	MOM-Y	MOM-Z
	4	3	0.00	0.00	14.26	-4.32	0.02	0.00
		7	0.00	0.00	-14.26	4.32	-218.51	0.00
	5	3	-12.50	4.30	0.00	0.00	0.00	31.25
		7	12.50	-4.30	0.00	0.00	0.00	34.63
	6	3	0.00	0.00	1.23	0.00	1.85	0.00
		7	0.00	0.00	-1.23	0.00	-20.69	0.00
	7	3	55.84	2.61	14.26	-4.32	-27.78	26.98
		7	-67.18	-2.61	-14.26	4.32	-190.71	12.93
	8	3	26.35	5.52	11.41	-3.46	-22.23	46.58
		7	-35.42	-5.52	-11.41	3.46	-152.57	38.05
	9	3	41.67	3.12	11.41	-3.46	-22.23	29.09
		7	-50.74	-3.12	-11.41	3.46	-152.57	18.66
	10	3	44.67	2.08	12.39	-3.46	-20.75	21.59
		7	-53.74	-2.08	-12.39	3.46	-169.12	10.35
	11	3	23.72	4.97	11.15	-3.11	-18.67	41.93
		7	-31.88	-4.97	-11.15	3.11	-152.21	34.25
	12	3	37.46	2.82	11.15	-3.11	-18.67	26.30
		7	-45.62	-2.82	-11.15	3.11	-152.21	16.93
	13	3	31.04	2.61	14.26	-4.32	-27.78	26.98
		7	-42.38	-2.61	-14.26	4.32	-190.71	12.93
7	1	4	45.46	-2.61	0.00	0.00	-27.80	-26.99
		8	-56.80	2.61	0.00	0.00	27.80	-12.93
	2	4	-14.40	0.00	0.00	0.00	0.00	0.00
		8	14.40	0.00	0.00	0.00	0.00	0.00
	3	4	10.40	0.00	0.00	0.00	0.00	0.00
		8	-10.40	0.00	0.00	0.00	0.00	0.00
	4	4	0.00	0.00	14.27	4.34	-0.02	0.00
		8	0.00	0.00	-14.27	-4.34	-218.55	0.00
	5	4	6.40	4.30	0.00	0.00	0.00	31.25
		8	-6.40	-4.30	0.00	0.00	0.00	34.63
	6	4	0.00	0.00	1.23	0.00	1.85	0.00
		8	0.00	0.00	-1.23	0.00	-20.69	0.00
	7	4	55.86	-2.61	14.27	4.34	-27.82	-26.99
		8	-67.20	2.61	-14.27	-4.34	-190.75	-12.93
	8	4	41.49	1.36	11.41	3.47	-22.25	3.41
		8	-50.56	-1.36	-11.41	-3.47	-152.60	17.36
	9	4	46.22	-1.05	11.41	3.47	-22.25	-14.09
		8	-55.29	1.05	-11.41	-3.47	-152.60	-2.03
	10	4	44.69	-2.08	12.40	3.47	-20.77	-21.59
		8	-53.76	2.08	-12.40	-3.47	-169.16	-10.35
	11	4	37.34	1.22	11.16	3.13	-18.70	3.07
		8	-45.50	-1.22	-11.16	-3.13	-152.24	15.62
	12	4	41.63	-0.93	11.16	3.13	-18.70	-12.56
		8	-49.79	0.93	-11.16	-3.13	-152.24	-1.69
	13	4	31.06	-2.61	14.27	4.34	-27.82	-26.99
		8	-42.40	2.61	-14.27	-4.34	-190.75	-12.93

********** END OF LATEST ANALYSIS RESULT **********

75. PRINT FORCE ENVELOPE NSECTION 10 LIST 1 TO 7

MEMBER FORCE ENVELOPE

ALL UNITS ARE KIP FEET

MEMB	DISTANCE		FY	LD	MZ	LD	FZ	LD	MY	LD
1	0.00	MAX.	0.00	5	0.00	5	0.00	1	0.00	4
		MIN.	0.00	13	0.00	13	0.00	4	0.00	1
	1.80	MAX.	0.00	5	1.07	13	0.92	13	0.83	13
		MIN.	-1.19	13	0.00	2	0.00	5	0.00	1
	3.60	MAX.	0.00	5	4.28	13	1.84	13	3.30	13
		MIN.	-2.38	13	0.00	2	0.00	5	0.00	1
	5.40	MAX.	0.00	5	9.62	13	2.75	13	7.44	13
		MIN.	-3.56	13	0.00	2	0.00	5	0.00	1
	7.20	MAX.	0.00	5	17.11	13	3.67	13	13.22	13
		MIN.	-4.75	13	0.00	2	0.00	5	0.00	1
	9.00	MAX.	0.00	5	26.73	13	4.59	13	20.66	13
		MIN.	-5.94	13	0.00	2	0.00	5	0.00	1
	10.80	MAX.	0.00	5	38.49	13	5.51	13	29.74	13
		MIN.	-7.13	13	0.00	2	0.00	5	0.00	6
	12.60	MAX.	0.00	5	52.39	13	6.43	13	40.48	13
		MIN.	-8.32	13	0.00	3	0.00	5	0.00	6
	14.40	MAX.	0.00	5	68.43	13	7.34	13	52.88	13
		MIN.	-9.50	13	0.00	3	0.00	5	0.00	6
	16.20	MAX.	0.00	5	86.61	13	8.26	13	66.92	13
		MIN.	-10.69	13	0.00	3	0.00	5	0.00	6
	18.00	MAX.	0.00	5	106.92	13	9.18	13	82.62	13
		MIN.	-11.88	13	0.00	5	0.00	5	0.00	5

MAX/MIN FORCES FOR MEMBER 1,AMONGST ALL SECT LOCATIONS

	FY/ FZ	DIST DIST	LD LD	MZ/ MY	DIST DIST	LD LD	FX	DIST	LD
MAX.	0.00	0.00	5	106.92	18.00	1			
	9.18	18.00	4	82.62	18.00	4	0.00	0.00	1
MIN.	-11.88	18.00	13	0.00	0.00	13			
	0.00	0.00	4	0.00	0.00	1	0.00	18.00	13

2	0.00	MAX.	0.00	5	106.92	13	9.18	13	82.62	13
		MIN.	-11.88	13	0.00	3	0.00	6	0.00	5
	0.19	MAX.	0.00	5	109.24	13	9.30	13	84.39	13
		MIN.	-12.32	13	0.00	3	0.00	6	0.00	5
	0.38	MAX.	0.00	5	111.64	13	9.41	13	86.18	13
		MIN.	-12.76	13	0.00	3	0.00	6	0.00	5
	0.58	MAX.	0.00	5	114.13	13	9.53	13	88.00	13
		MIN.	-13.20	13	0.00	3	0.00	6	0.00	5

	0.77	MAX.	0.00	5	116.70	13	9.65	13	89.84	13
		MIN.	-13.64	13	0.00	3	0.00	6	0.00	6
	0.96	MAX.	0.00	5	119.36	13	9.76	13	91.70	13
		MIN.	-14.08	13	0.00	3	0.00	6	0.00	6
	1.15	MAX.	0.00	5	122.10	13	9.88	13	93.58	13
		MIN.	-14.53	13	0.00	3	0.00	6	0.00	6
	1.34	MAX.	0.00	5	124.93	13	10.00	13	95.49	13
		MIN.	-14.97	13	0.00	5	0.00	6	0.00	6
	1.53	MAX.	0.00	5	127.84	13	10.12	13	97.41	13
		MIN.	-15.41	13	0.00	5	0.00	6	0.00	6
	1.73	MAX.	0.00	5	130.84	13	10.23	13	99.36	13
		MIN.	-15.85	13	0.00	5	0.00	6	0.00	6
	1.92	MAX.	0.00	5	133.92	13	10.35	13	101.34	13
		MIN.	-16.29	13	0.00	3	0.00	6	0.00	1

MAX/MIN FORCES FOR MEMBER 2,AMONGST ALL SECT LOCATIONS

	FY/ FZ	DIST DIST	LD LD	MZ/ MY	DIST DIST	LD LD	FX	DIST	LD
MAX.	0.00	0.00	5	133.92	1.92	1			
	10.35	1.92	4	101.34	1.92	4	0.00 C	0.00	5
MIN.	-16.29	1.92	13	0.00	1.73	5			
	0.00	1.92	6	0.00	1.73	6	0.00 T	1.92	13

3	0.00	MAX.	14.75	13	106.93	13	0.00	1	97.01	4
		MIN.	-4.87	5	-31.25	5	-3.91	4	0.00	1
	1.28	MAX.	11.80	13	89.89	13	0.00	1	92.49	4
		MIN.	-4.87	5	-25.00	5	-3.13	4	0.00	1
	2.57	MAX.	8.85	13	76.64	13	0.00	1	88.98	4
		MIN.	-4.87	5	-18.75	5	-2.35	4	0.00	1
	3.85	MAX.	5.90	13	67.17	13	0.00	1	86.47	4
		MIN.	-4.87	5	-12.50	5	-1.56	4	0.00	1
	5.13	MAX.	2.95	13	61.50	13	0.00	1	84.96	4
		MIN.	-4.87	5	-6.25	5	-0.78	4	0.00	1
	6.42	MAX.	0.00	3	59.61	13	0.00	13	84.46	13
		MIN.	-4.87	5	0.00	3	0.00	5	0.00	1
	7.70	MAX.	0.00	3	61.51	13	0.78	13	84.97	13
		MIN.	-6.26	8	0.00	3	0.00	5	0.00	6
	8.98	MAX.	0.00	3	67.19	13	1.57	13	86.48	13
		MIN.	-8.62	8	0.00	3	0.00	5	0.00	6
	10.27	MAX.	0.00	3	76.67	13	2.35	13	88.99	13
		MIN.	-10.98	8	0.00	3	0.00	5	0.00	6
	11.55	MAX.	0.00	3	91.94	8	3.13	13	92.51	13
		MIN.	-13.34	8	0.00	3	0.00	5	0.00	6
	12.83	MAX.	0.00	3	110.58	8	3.92	13	97.03	13
		MIN.	-15.71	8	0.00	3	0.00	5	0.00	6

MAX/MIN FORCES FOR MEMBER 3,AMONGST ALL SECT LOCATIONS

	FY/ FZ	DIST DIST	LD LD	MZ/ MY	DIST DIST	LD LD	FX	DIST	LD
MAX.	14.75	0.00	1	110.58	12.83	8			
	3.92	12.83	7	97.03	12.83	7	0.00 C	0.00	5
MIN.	-15.71	12.83	8	-31.25	0.00	5			
	-3.91	0.00	4	0.00	0.00	1	2.61 T	12.83	13

4	0.00	MAX.	16.30	13	133.97	13	0.00	1	101.37	13
		MIN.	0.00	3	0.00	5	-10.35	13	0.00	6
	0.19	MAX.	15.85	13	130.88	13	0.00	1	99.39	13
		MIN.	0.00	3	0.00	5	-10.23	13	0.00	6
	0.38	MAX.	15.41	13	127.88	13	0.00	1	97.44	13
		MIN.	0.00	3	0.00	5	-10.12	13	0.00	6
	0.58	MAX.	14.97	13	124.96	13	0.00	1	95.51	13
		MIN.	0.00	3	0.00	5	-10.00	13	0.00	6
	0.77	MAX.	14.53	13	122.13	13	0.00	1	93.60	13
		MIN.	0.00	3	0.00	5	-9.88	13	0.00	6
	0.96	MAX.	14.09	13	119.38	13	0.00	1	91.71	13
		MIN.	0.00	3	0.00	5	-9.77	13	0.00	6
	1.15	MAX.	13.65	13	116.72	13	0.00	1	89.85	13
		MIN.	0.00	3	0.00	5	-9.65	13	0.00	6
	1.34	MAX.	13.20	13	114.14	13	0.00	1	88.01	13
		MIN.	0.00	3	0.00	5	-9.53	13	0.00	6
	1.54	MAX.	12.76	13	111.65	13	0.00	1	86.19	13
		MIN.	0.00	3	0.00	5	-9.41	13	0.00	6
	1.73	MAX.	12.32	13	109.24	13	0.00	1	84.39	13
		MIN.	0.00	3	0.00	5	-9.30	13	0.00	6
	1.92	MAX.	11.88	13	106.92	13	0.00	1	82.62	13
		MIN.	0.00	3	0.00	3	-9.18	13	0.00	6

MAX/MIN FORCES FOR MEMBER 4,AMONGST ALL SECT LOCATIONS

	FY/ FZ	DIST DIST	LD LD	MZ/ MY	DIST DIST	LD LD	FX	DIST	LD
MAX.	16.30	0.00	1	133.97	0.00	1			
	0.00	0.00	1	101.37	0.00	4	0.00 C	0.00	3
MIN.	0.00	1.92	3	0.00	0.00	5			
	-10.35	0.00	13	0.00	0.00	6	0.00	1.92	13

5	0.00	MAX.	11.88	13	106.92	13	0.00	6	82.62	13
		MIN.	0.00	2	0.00	5	-9.18	13	0.00	6
	1.80	MAX.	10.69	13	86.61	13	0.00	6	66.92	13
		MIN.	0.00	2	0.00	5	-8.26	13	0.00	6
	3.60	MAX.	9.50	13	68.43	13	0.00	6	52.88	13
		MIN.	0.00	2	0.00	5	-7.34	13	0.00	6

5.40	MAX.	8.32	13	52.39	13	0.00	6	40.48	13
	MIN.	0.00	2	0.00	5	-6.43	13	0.00	6
7.20	MAX.	7.13	13	38.49	13	0.00	6	29.74	13
	MIN.	0.00	2	0.00	5	-5.51	13	0.00	6
9.00	MAX.	5.94	13	26.73	13	0.00	6	20.66	13
	MIN.	0.00	2	0.00	5	-4.59	13	0.00	1
10.80	MAX.	4.75	13	17.11	13	0.00	6	13.22	13
	MIN.	0.00	2	0.00	5	-3.67	13	0.00	1
12.60	MAX.	3.56	13	9.62	13	0.00	6	7.44	13
	MIN.	0.00	2	0.00	5	-2.75	13	0.00	1
14.40	MAX.	2.38	13	4.28	13	0.00	6	3.30	13
	MIN.	0.00	2	0.00	5	-1.84	13	0.00	1
16.20	MAX.	1.19	13	1.07	13	0.00	6	0.83	13
	MIN.	0.00	2	0.00	5	-0.92	13	0.00	1
18.00	MAX.	0.00	5	0.00	13	0.00	6	0.00	6
	MIN.	0.00	13	0.00	5	0.00	13	0.00	13

MAX/MIN FORCES FOR MEMBER 5,AMONGST ALL SECT LOCATIONS

	FY/ FZ	DIST DIST	LD LD	MZ/ MY	DIST DIST	LD LD	FX	DIST	LD
MAX.	11.88	0.00	1	106.92	0.00	1			
	0.00	0.00	6	82.62	0.00	4	0.00	0.00	1
MIN.	0.00	18.00	13	0.00	16.20	5			
	-9.18	0.00	13	0.00	18.00	13	0.00 T	18.00	5

6	0.00	MAX.	5.52	8	46.58	8	14.26	4	1.85	6
		MIN.	0.00	3	0.00	3	0.00	1	-27.80	1
	1.53	MAX.	5.52	8	38.12	8	14.26	4	21.87	4
		MIN.	0.00	3	0.00	3	0.00	1	-27.80	1
	3.06	MAX.	5.52	8	29.66	8	14.26	4	43.72	4
		MIN.	0.00	3	0.00	3	0.00	1	-27.80	1
	4.60	MAX.	5.52	8	21.19	8	14.26	4	65.56	4
		MIN.	0.00	3	0.00	3	0.00	1	-27.80	1
	6.13	MAX.	5.52	8	12.73	8	14.26	4	87.41	4
		MIN.	0.00	3	0.00	3	0.00	1	-27.80	1
	7.66	MAX.	5.52	8	7.02	13	14.26	4	109.26	4
		MIN.	0.00	3	-1.69	5	0.00	1	-27.80	1
	9.19	MAX.	5.52	8	3.03	13	14.26	4	131.11	4
		MIN.	0.00	3	-8.28	5	0.00	1	-27.80	1
	10.72	MAX.	5.52	8	0.00	3	14.26	4	152.96	4
		MIN.	0.00	3	-14.87	5	0.00	1	-27.80	1
	12.26	MAX.	5.52	8	0.00	3	14.26	4	174.81	4
		MIN.	0.00	3	-21.45	5	0.00	1	-27.80	1
	13.79	MAX.	5.52	8	0.00	3	14.26	4	196.66	4
		MIN.	0.00	3	-29.59	8	0.00	1	-27.80	1
	15.32	MAX.	5.52	8	0.00	3	14.26	4	218.51	4
		MIN.	0.00	3	-38.05	8	0.00	1	-27.80	1

MAX/MIN FORCES FOR MEMBER 6,AMONGST ALL SECT LOCATIONS

	FY/ FZ	DIST DIST	LD LD	MZ/ MY	DIST DIST	LD LD	FX	DIST	LD
MAX.	5.52	0.00	8	46.58	0.00	8			
	14.26	0.00	4	218.51	15.32	4	67.18 C	15.32	7
MIN.	0.00	15.32	3	-38.05	15.32	8			
	0.00	15.32	1	-27.80	15.32	1	14.40 T	15.32	2

7	0.00	MAX.	4.30	5	31.25	5	14.27	13	1.85	6
		MIN.	-2.61	13	-26.99	13	0.00	5	-27.82	13
	1.53	MAX.	4.30	5	24.66	5	14.27	13	21.84	4
		MIN.	-2.61	13	-22.99	13	0.00	5	-27.80	1
	3.06	MAX.	4.30	5	18.07	5	14.27	13	43.70	4
		MIN.	-2.61	13	-19.00	13	0.00	5	-27.80	1
	4.60	MAX.	4.30	5	11.48	5	14.27	13	65.55	4
		MIN.	-2.61	13	-15.01	13	0.00	5	-27.80	1
	6.13	MAX.	4.30	5	4.90	5	14.27	13	87.41	4
		MIN.	-2.61	13	-11.02	13	0.00	5	-27.80	1
	7.66	MAX.	4.30	5	0.00	3	14.27	13	109.27	4
		MIN.	-2.61	13	-7.03	13	0.00	5	-27.80	1
	9.19	MAX.	4.30	5	0.00	3	14.27	13	131.12	4
		MIN.	-2.61	13	-9.05	8	0.00	5	-27.80	1
	10.72	MAX.	4.30	5	0.96	13	14.27	13	152.98	4
		MIN.	-2.61	13	-14.87	5	0.00	5	-27.80	1
	12.26	MAX.	4.30	5	4.95	13	14.27	13	174.84	4
		MIN.	-2.61	13	-21.45	5	0.00	5	-27.80	1
	13.79	MAX.	4.30	5	8.94	13	14.27	13	196.69	4
		MIN.	-2.61	13	-28.04	5	0.00	5	-27.80	1
	15.32	MAX.	4.30	5	12.93	13	14.27	13	218.55	4
		MIN.	-2.61	13	-34.63	5	0.00	5	-27.80	1

MAX/MIN FORCES FOR MEMBER 7,AMONGST ALL SECT LOCATIONS

	FY/ FZ	DIST DIST	LD LD	MZ/ MY	DIST DIST	LD LD	FX	DIST	LD
MAX.	4.30	0.00	5	31.25	0.00	5			
	14.27	0.00	7	218.55	15.32	4	67.20 C	15.32	7
MIN.	-2.61	15.32	13	-34.63	15.32	5			
	0.00	15.32	5	-27.82	0.00	13	14.40 T	15.32	2

********** END OF FORCE ENVELOPE FROM INTERNAL STORAGE **********

76. FINISH

```
*********** END OF THE STAAD.Pro RUN ***********

**** DATE= JUL  8,2002   TIME= 13:24:47 ****

*********************************************************
*     For questions on STAAD.Pro, please contact :      *
*  By Email - North America  : support@ca.reiusa.com    *
*  By Email - International  : support@reiusa.com       *
*  Tel. (USA) : 714-974-2500 ; Fax (USA) : 714-974-4771 *
*********************************************************
```

INPUT VERIFICATION only DPC 6/02

87th Ped.lpo

Licensed to: Sergio Oliden

DMJM+HARRIS

PROGRAM LPILE plus Version 3.0
(C) COPYRIGHT 1997 ENSOFT, INC.
ALL RIGHTS RESERVED

BHOC 87th Ave Ped Bridge 30" Dia. Shafts at Abutments (18ft wingwalls)

UNITS--ENGLISH UNITS

I N P U T I N F O R M A T I O N

THE LOADING IS STATIC

PILE GEOMETRY AND PROPERTIES

PILE LENGTH = 300.00 IN (25 ft)
2 POINTS

X	DIAMETER	MOMENT OF INERTIA	AREA	MODULUS OF ELASTICITY
IN	IN	IN**4	IN**2	LBS/IN**2
.00	30.000	.398E+05	.707E+03	.320E+07
300.00	30.000	.398E+05	.707E+03	.320E+07

SOILS INFORMATION

X AT THE GROUND SURFACE = 36.00 IN

SLOPE ANGLE AT THE GROUND SURFACE = .00 DEG.

2 LAYER(S) OF SOIL

LAYER 1
THE SOIL IS A STIFF CLAY WITH NO FREE WATER
X AT THE TOP OF THE LAYER = 36.00 IN
X AT THE BOTTOM OF THE LAYER = 348.00 IN
MODULUS OF SUBGRADE REACTION = .500E+03 LBS/IN**3

LAYER 2
THE SOIL IS A SAND - P-Y CRITERIA BY REESE ET AL, 1974
X AT THE TOP OF THE LAYER = 348.00 IN

```
X AT THE BOTTOM OF THE LAYER      =    1000.00 IN
MODULUS OF SUBGRADE REACTION      =   .200E+03 LBS/IN**3


DISTRIBUTION OF EFFECTIVE UNIT WEIGHT WITH DEPTH
                    4 POINTS
            X,IN     WEIGHT,LBS/IN**3
             .00        .64E-01
          348.00        .64E-01
          348.00        .67E-01
         1000.00        .67E-01

DISTRIBUTION OF STRENGTH PARAMETERS WITH DEPTH
                    4 POINTS
            X,IN       C,LBS/IN**2     PHI,DEGREES     E50
             .00       .278E+01           .000       .600E-02
          348.00       .278E+01           .000       .600E-02
          348.00       .000E+00       .300E+02       -----
         1000.00       .000E+00       .300E+02       -----


BOUNDARY AND LOADING CONDITIONS
-------------------------------


LOADING NUMBER   1

BOUNDARY-CONDITION CODE                =          1
LATERAL LOAD AT THE PILE HEAD          =   .143E+05 LBS
MOMENT AT THE PILE HEAD                =   .333E+06 IN-LBS
AXIAL LOAD AT THE PILE HEAD            =   .310E+05 LBS
```

member 6
jt 3
LC # 13

```
LOADING NUMBER   2

BOUNDARY-CONDITION CODE                =          1
LATERAL LOAD AT THE PILE HEAD          =   .114E+05 LBS
MOMENT AT THE PILE HEAD                =   .267E+06 IN-LBS
AXIAL LOAD AT THE PILE HEAD            =   .264E+05 LBS
```

member 6
jt 3
LC # 8

```
FINITE-DIFFERENCE PARAMETERS
NUMBER OF PILE INCREMENTS                                  =         50
DEFLECTION TOLERANCE ON DETERMINATION OF CLOSURE           =   .100E-11 IN
MAXIMUM NUMBER OF ITERATIONS ALLOWED FOR PILE ANALYSIS     =        100
MAXIMUM ALLOWABLE DEFLECTION                               =    .16E+03 IN


OUTPUT CODES
KOUTPT =  1
KPYOP  =  1
INC    =  1

     DEPTH      DIAM       C        CAVG    GAMMA AVG      E50
       IN        IN    LBS/IN**2 LBS/IN**3 LBS/IN**3
     210.00    30.000   .28E+01   .33E+01   .75E-01    .600E-02
                            Y                  P
                           IN                LBS/IN
                        .000E+00           .000E+00
                        .720E-04           .422E+02
                        .360E-03           .631E+02
```

.720E-03	.750E+02
.360E-02	.112E+03
.720E-02	.133E+03
.360E-01	.199E+03
.720E-01	.237E+03
.180E+00	.298E+03
.360E+00	.355E+03
.540E+00	.393E+03
.720E+00	.422E+03
.180E+01	.530E+03
.360E+01	.631E+03
.720E+01	.750E+03
.810E+01	.750E+03
.900E+01	.750E+03

DEPTH IN	DIAM IN	C LBS/IN**2	CAVG LBS/IN**3	GAMMA AVG LBS/IN**3	E50
222.00	30.000	.28E+01	.32E+01	.74E-01	.600E-02

Y IN	P LBS/IN
.000E+00	.000E+00
.720E-04	.422E+02
.360E-03	.631E+02
.720E-03	.750E+02
.360E-02	.112E+03
.720E-02	.133E+03
.360E-01	.199E+03
.720E-01	.237E+03
.180E+00	.298E+03
.360E+00	.355E+03
.540E+00	.393E+03
.720E+00	.422E+03
.180E+01	.530E+03
.360E+01	.631E+03
.720E+01	.750E+03
.810E+01	.750E+03
.900E+01	.750E+03

DEPTH IN	DIAM IN	C LBS/IN**2	CAVG LBS/IN**3	GAMMA AVG LBS/IN**3	E50
234.00	30.000	.28E+01	.32E+01	.74E-01	.600E-02

Y IN	P LBS/IN
.000E+00	.000E+00
.720E-04	.422E+02
.360E-03	.631E+02
.720E-03	.750E+02
.360E-02	.112E+03
.720E-02	.133E+03
.360E-01	.199E+03
.720E-01	.237E+03
.180E+00	.298E+03
.360E+00	.355E+03
.540E+00	.393E+03
.720E+00	.422E+03
.180E+01	.530E+03
.360E+01	.631E+03
.720E+01	.750E+03
.810E+01	.750E+03
.900E+01	.750E+03

DEPTH IN	DIAM IN	C LBS/IN**2	CAVG LBS/IN**3	GAMMA AVG LBS/IN**3	E50
270.00	30.000	.28E+01	.31E+01	.72E-01	.600E-02

Y IN	P LBS/IN
.000E+00	.000E+00
.720E-04	.422E+02
.360E-03	.631E+02
.720E-03	.750E+02
.360E-02	.112E+03
.720E-02	.133E+03
.360E-01	.199E+03
.720E-01	.237E+03
.180E+00	.298E+03
.360E+00	.355E+03
.540E+00	.393E+03
.720E+00	.422E+03
.180E+01	.530E+03
.360E+01	.631E+03
.720E+01	.750E+03
.810E+01	.750E+03
.900E+01	.750E+03

DEPTH IN	DIAM IN	PHI	GAMMA AVG LBS/IN**3	A	B	PST	PSD
330.00	30.00	30.0	.708E-01	2.41	1.77	.146E+03	.201E+05

Y IN	P LBS/IN
.000E+00	.000E+00
.417E-01	.127E+03
.833E-01	.155E+03
.125E+00	.174E+03
.167E+00	.189E+03
.208E+00	.201E+03
.250E+00	.212E+03
.292E+00	.221E+03
.333E+00	.230E+03
.375E+00	.238E+03
.417E+00	.245E+03
.458E+00	.252E+03
.500E+00	.258E+03
.113E+01	.351E+03
.311E+02	.351E+03
.611E+02	.351E+03
.911E+02	.351E+03

O U T P U T I N F O R M A T I O N

```
**************************************************
* COMPUTE LOAD-DISTRIBUTION AND LOAD-DEFLECTION *
* CURVES FOR LATERAL LOADING                    *
**************************************************
```

LOADING NUMBER 1

BOUNDARY CONDITION CODE = 1
LATERAL LOAD AT THE PILE HEAD = .143E+05 LBS
MOMENT AT THE PILE HEAD = .333E+06 IN-LBS
AXIAL LOAD AT THE PILE HEAD = .310E+05 LBS

X IN	DEFLECTION IN	MOMENT LBS-IN	SHEAR LBS	SLOPE RAD.	TOTAL STRESS LBS/IN**2	FLEXURAL RIGIDITY LBS-IN**2	SOIL REACTION LBS/IN
*****	*********	*********	*********	*********	*********	*********	*********
.0	.168E+00	.333E+06	.143E+05	-.160E-02	.170E+03	.127E+12	.000E+00
6.0	.158E+00	.419E+06	.143E+05	-.158E-02	.202E+03	.127E+12	.000E+00
12.0	.149E+00	.505E+06	.143E+05	-.156E-02	.234E+03	.127E+12	.000E+00
18.0	.140E+00	.591E+06	.143E+05	-.153E-02	.267E+03	.127E+12	.000E+00
24.0	.131E+00	.677E+06	.143E+05	-.150E-02	.299E+03	.127E+12	.000E+00
30.0	.122E+00	.763E+06	.143E+05	-.147E-02	.332E+03	.127E+12	.000E+00
36.0	.113E+00	.848E+06	.140E+05	-.143E-02	.364E+03	.127E+12	-.885E+02
42.0	.105E+00	.931E+06	.129E+05	-.139E-02	.395E+03	.127E+12	-.260E+03
48.0	.964E-01	.100E+07	.114E+05	-.134E-02	.423E+03	.127E+12	-.255E+03
54.0	.884E-01	.107E+07	.989E+04	-.129E-02	.447E+03	.127E+12	-.250E+03
60.0	.808E-01	.112E+07	.841E+04	-.124E-02	.468E+03	.127E+12	-.244E+03
66.0	.736E-01	.117E+07	.696E+04	-.119E-02	.485E+03	.127E+12	-.238E+03
72.0	.666E-01	.121E+07	.556E+04	-.113E-02	.499E+03	.127E+12	-.229E+03
78.0	.600E-01	.124E+07	.422E+04	-.107E-02	.510E+03	.127E+12	-.218E+03
84.0	.537E-01	.126E+07	.293E+04	-.101E-02	.519E+03	.127E+12	-.210E+03
90.0	.478E-01	.127E+07	.169E+04	-.955E-03	.524E+03	.127E+12	-.204E+03
96.0	.423E-01	.128E+07	.483E+03	-.894E-03	.526E+03	.127E+12	-.198E+03
102.0	.371E-01	.128E+07	-.693E+03	-.834E-03	.526E+03	.127E+12	-.194E+03
108.0	.323E-01	.127E+07	-.184E+04	-.774E-03	.523E+03	.127E+12	-.189E+03
114.0	.278E-01	.126E+07	-.296E+04	-.714E-03	.518E+03	.127E+12	-.185E+03
120.0	.237E-01	.124E+07	-.406E+04	-.656E-03	.510E+03	.127E+12	-.180E+03
126.0	.199E-01	.121E+07	-.511E+04	-.598E-03	.500E+03	.127E+12	-.172E+03
132.0	.165E-01	.117E+07	-.612E+04	-.542E-03	.487E+03	.127E+12	-.164E+03
138.0	.134E-01	.113E+07	-.708E+04	-.487E-03	.472E+03	.127E+12	-.156E+03
144.0	.107E-01	.109E+07	-.799E+04	-.435E-03	.455E+03	.127E+12	-.147E+03
150.0	.820E-02	.104E+07	-.884E+04	-.385E-03	.436E+03	.127E+12	-.138E+03
156.0	.604E-02	.984E+06	-.964E+04	-.337E-03	.415E+03	.127E+12	-.128E+03
162.0	.416E-02	.924E+06	-.104E+05	-.292E-03	.392E+03	.127E+12	-.116E+03
168.0	.253E-02	.859E+06	-.110E+05	-.250E-03	.368E+03	.127E+12	-.103E+03
174.0	.116E-02	.791E+06	-.116E+05	-.211E-03	.342E+03	.127E+12	-.844E+02
180.0	.701E-10	.720E+06	-.118E+05	-.176E-03	.316E+03	.127E+12	-.132E+01
186.0	-.951E-03	.649E+06	-.116E+05	-.143E-03	.289E+03	.127E+12	.804E+02
192.0	-.172E-02	.581E+06	-.111E+05	-.114E-03	.263E+03	.127E+12	.932E+02
198.0	-.232E-02	.516E+06	-.105E+05	-.883E-04	.239E+03	.127E+12	.101E+03
204.0	-.278E-02	.455E+06	-.989E+04	-.654E-04	.216E+03	.127E+12	.105E+03
210.0	-.311E-02	.398E+06	-.925E+04	-.453E-04	.194E+03	.127E+12	.108E+03
216.0	-.332E-02	.344E+06	-.860E+04	-.278E-04	.174E+03	.127E+12	.110E+03
222.0	-.344E-02	.294E+06	-.794E+04	-.128E-04	.155E+03	.127E+12	.111E+03
228.0	-.348E-02	.249E+06	-.727E+04	.220E-07	.138E+03	.127E+12	.111E+03
234.0	-.344E-02	.207E+06	-.660E+04	.108E-04	.122E+03	.127E+12	.111E+03
240.0	-.335E-02	.170E+06	-.594E+04	.197E-04	.108E+03	.127E+12	.110E+03
246.0	-.320E-02	.136E+06	-.528E+04	.269E-04	.952E+02	.127E+12	.109E+03
252.0	-.302E-02	.106E+06	-.463E+04	.326E-04	.840E+02	.127E+12	.107E+03
258.0	-.281E-02	.803E+05	-.400E+04	.370E-04	.742E+02	.127E+12	.105E+03
264.0	-.258E-02	.582E+05	-.337E+04	.402E-04	.659E+02	.127E+12	.103E+03
270.0	-.233E-02	.398E+05	-.276E+04	.425E-04	.589E+02	.127E+12	.101E+03
276.0	-.207E-02	.251E+05	-.216E+04	.441E-04	.534E+02	.127E+12	.977E+02

282.0	-.180E-02	.139E+05	-.159E+04	.450E-04	.491E+02	.127E+12	.943E+02
288.0	-.153E-02	.604E+04	-.103E+04	.455E-04	.462E+02	.127E+12	.906E+02
294.0	-.126E-02	.147E+04	-.502E+03	.456E-04	.445E+02	.127E+12	.862E+02
300.0	-.983E-03	.000E+00	.000E+00	.457E-04	.439E+02	.127E+12	.811E+02

OUTPUT VERIFICATION

THE MAXIMUM MOMENT IMBALANCE FOR ANY ELEMENT = -.130E-05 IN-LBS
THE MAX. LATERAL FORCE IMBALANCE FOR ANY ELEMENT = .106E-06 LBS

OUTPUT SUMMARY

PILE-HEAD DEFLECTION = .168E+00 IN
COMPUTED SLOPE AT PILE HEAD = -.160E-02
MAXIMUM BENDING MOMENT = .128E+07 LBS-IN = 106.7 K-ft
MAXIMUM SHEAR FORCE = .143E+05 LBS = 14.3 K
NO. OF ITERATIONS = 81
NO. OF ZERO DEFLECTION POINTS = 1

USED IN RECD FOR EARTH PLUS M = 20.6 FOR RST

LOADING NUMBER 2

BOUNDARY CONDITION CODE = 1
LATERAL LOAD AT THE PILE HEAD = .114E+05 LBS
MOMENT AT THE PILE HEAD = .267E+06 IN-LBS
AXIAL LOAD AT THE PILE HEAD = .264E+05 LBS

X IN	DEFLECTION IN	MOMENT LBS-IN	SHEAR LBS	SLOPE RAD.	TOTAL STRESS LBS/IN**2	FLEXURAL RIGIDITY LBS-IN**2	SOIL REACTION LBS/IN
.0	.112E+00	.267E+06	.114E+05	-.114E-02	.138E+03	.127E+12	.000E+00
6.0	.105E+00	.335E+06	.114E+05	-.113E-02	.164E+03	.127E+12	.000E+00
12.0	.980E-01	.404E+06	.114E+05	-.111E-02	.190E+03	.127E+12	.000E+00
18.0	.914E-01	.473E+06	.114E+05	-.109E-02	.216E+03	.127E+12	.000E+00
24.0	.850E-01	.541E+06	.114E+05	-.107E-02	.241E+03	.127E+12	.000E+00
30.0	.786E-01	.610E+06	.114E+05	-.104E-02	.267E+03	.127E+12	.000E+00
36.0	.725E-01	.679E+06	.112E+05	-.101E-02	.293E+03	.127E+12	-.792E+02
42.0	.665E-01	.744E+06	.102E+05	-.975E-03	.318E+03	.127E+12	-.233E+03
48.0	.608E-01	.802E+06	.886E+04	-.938E-03	.340E+03	.127E+12	-.227E+03
54.0	.553E-01	.851E+06	.751E+04	-.899E-03	.358E+03	.127E+12	-.222E+03
60.0	.500E-01	.892E+06	.619E+04	-.858E-03	.374E+03	.127E+12	-.217E+03
66.0	.450E-01	.925E+06	.491E+04	-.815E-03	.386E+03	.127E+12	-.211E+03
72.0	.402E-01	.951E+06	.367E+04	-.771E-03	.396E+03	.127E+12	-.202E+03
78.0	.357E-01	.970E+06	.249E+04	-.726E-03	.403E+03	.127E+12	-.192E+03
84.0	.315E-01	.981E+06	.137E+04	-.680E-03	.408E+03	.127E+12	-.184E+03
90.0	.276E-01	.986E+06	.283E+03	-.633E-03	.409E+03	.127E+12	-.178E+03
96.0	.239E-01	.985E+06	-.766E+03	-.587E-03	.409E+03	.127E+12	-.172E+03
102.0	.205E-01	.977E+06	-.178E+04	-.540E-03	.406E+03	.127E+12	-.167E+03
108.0	.174E-01	.964E+06	-.277E+04	-.495E-03	.401E+03	.127E+12	-.162E+03
114.0	.146E-01	.944E+06	-.373E+04	-.450E-03	.394E+03	.127E+12	-.157E+03
120.0	.120E-01	.919E+06	-.466E+04	-.406E-03	.384E+03	.127E+12	-.152E+03
126.0	.974E-02	.889E+06	-.554E+04	-.363E-03	.372E+03	.127E+12	-.144E+03
132.0	.769E-02	.853E+06	-.638E+04	-.322E-03	.359E+03	.127E+12	-.136E+03
138.0	.587E-02	.812E+06	-.717E+04	-.283E-03	.344E+03	.127E+12	-.127E+03

144.0	.429E-02	.767E+06	-.790E+04	-.246E-03	.327E+03	.127E+12	-.117E+03
150.0	.293E-02	.717E+06	-.857E+04	-.211E-03	.308E+03	.127E+12	-.107E+03
156.0	.177E-02	.664E+06	-.917E+04	-.178E-03	.288E+03	.127E+12	-.939E+02
162.0	.791E-03	.607E+06	-.969E+04	-.148E-03	.266E+03	.127E+12	-.768E+02
168.0	-.108E-04	.548E+06	-.984E+04	-.121E-03	.244E+03	.127E+12	.263E+02
174.0	-.658E-03	.489E+06	-.954E+04	-.963E-04	.222E+03	.127E+12	.733E+02
180.0	-.117E-02	.433E+06	-.906E+04	-.746E-04	.201E+03	.127E+12	.846E+02
186.0	-.155E-02	.381E+06	-.854E+04	-.554E-04	.181E+03	.127E+12	.909E+02
192.0	-.183E-02	.331E+06	-.798E+04	-.386E-04	.162E+03	.127E+12	.947E+02
198.0	-.202E-02	.285E+06	-.741E+04	-.241E-04	.145E+03	.127E+12	.970E+02
204.0	-.212E-02	.242E+06	-.682E+04	-.117E-04	.129E+03	.127E+12	.983E+02
210.0	-.216E-02	.203E+06	-.623E+04	-.119E-05	.114E+03	.127E+12	.987E+02
216.0	-.214E-02	.167E+06	-.564E+04	.754E-05	.100E+03	.127E+12	.984E+02
222.0	-.207E-02	.135E+06	-.505E+04	.147E-04	.883E+02	.127E+12	.976E+02
228.0	-.196E-02	.107E+06	-.447E+04	.204E-04	.775E+02	.127E+12	.963E+02
234.0	-.182E-02	.817E+05	-.390E+04	.248E-04	.681E+02	.127E+12	.946E+02
240.0	-.166E-02	.600E+05	-.333E+04	.282E-04	.599E+02	.127E+12	.924E+02
246.0	-.148E-02	.417E+05	-.279E+04	.306E-04	.530E+02	.127E+12	.899E+02
252.0	-.129E-02	.265E+05	-.226E+04	.322E-04	.473E+02	.127E+12	.869E+02
258.0	-.110E-02	.146E+05	-.175E+04	.331E-04	.428E+02	.127E+12	.833E+02
264.0	-.897E-03	.558E+04	-.126E+04	.336E-04	.394E+02	.127E+12	.792E+02
270.0	-.694E-03	-.550E+03	-.798E+03	.337E-04	.375E+02	.127E+12	.743E+02
276.0	-.492E-03	-.400E+04	-.370E+03	.336E-04	.388E+02	.127E+12	.682E+02
282.0	-.291E-03	-.500E+04	.138E+02	.334E-04	.392E+02	.127E+12	.598E+02
288.0	-.910E-04	-.385E+04	.327E+03	.332E-04	.387E+02	.127E+12	.447E+02
294.0	.108E-03	-.108E+04	.322E+03	.331E-04	.377E+02	.127E+12	-.466E+02
300.0	.306E-03	.000E+00	.000E+00	.331E-04	.373E+02	.127E+12	-.606E+02

OUTPUT VERIFICATION

THE MAXIMUM MOMENT IMBALANCE FOR ANY ELEMENT = .748E-07 IN-LBS
THE MAX. LATERAL FORCE IMBALANCE FOR ANY ELEMENT = .139E-07 LBS

OUTPUT SUMMARY

PILE-HEAD DEFLECTION = .112E+00 IN
COMPUTED SLOPE AT PILE HEAD = -.114E-02
MAXIMUM BENDING MOMENT = .986E+06 LBS-IN = 82.17 K-ft
MAXIMUM SHEAR FORCE = .114E+05 LBS = 11.40 K
NO. OF ITERATIONS = 78
NO. OF ZERO DEFLECTION POINTS = 2

S U M M A R Y T A B L E

BOUNDARY CONDITION BC1	BOUNDARY CONDITION BC2	AXIAL LOAD LBS	PILE HEAD DEFLECTION IN	MAX. MOMENT IN-LBS	MAX. SHEAR LBS
.1426E+05	.3334E+06	.3104E+05	.1679E+00	.1279E+07	.1426E+05
.1141E+05	.2668E+06	.2635E+05	.1116E+00	.9864E+06	.1141E+05

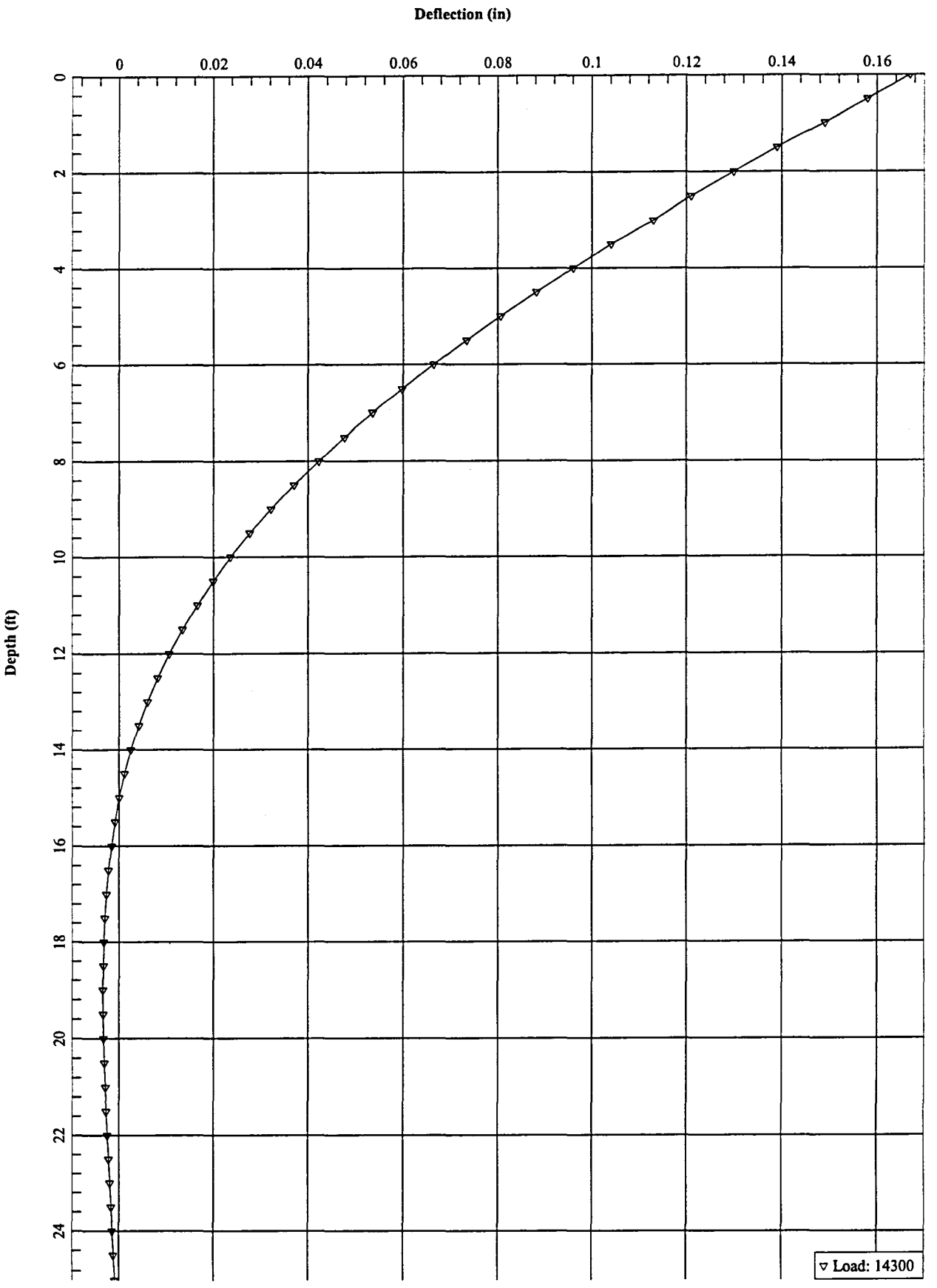
Deflection (in)
0
0.02
0.04
0.06
0.08
0.1
0.12
0.14
0.16
Depth (ft)
0
2
4
6
8
10
12
14
16
18
20
22
24
▽ Load: 14300

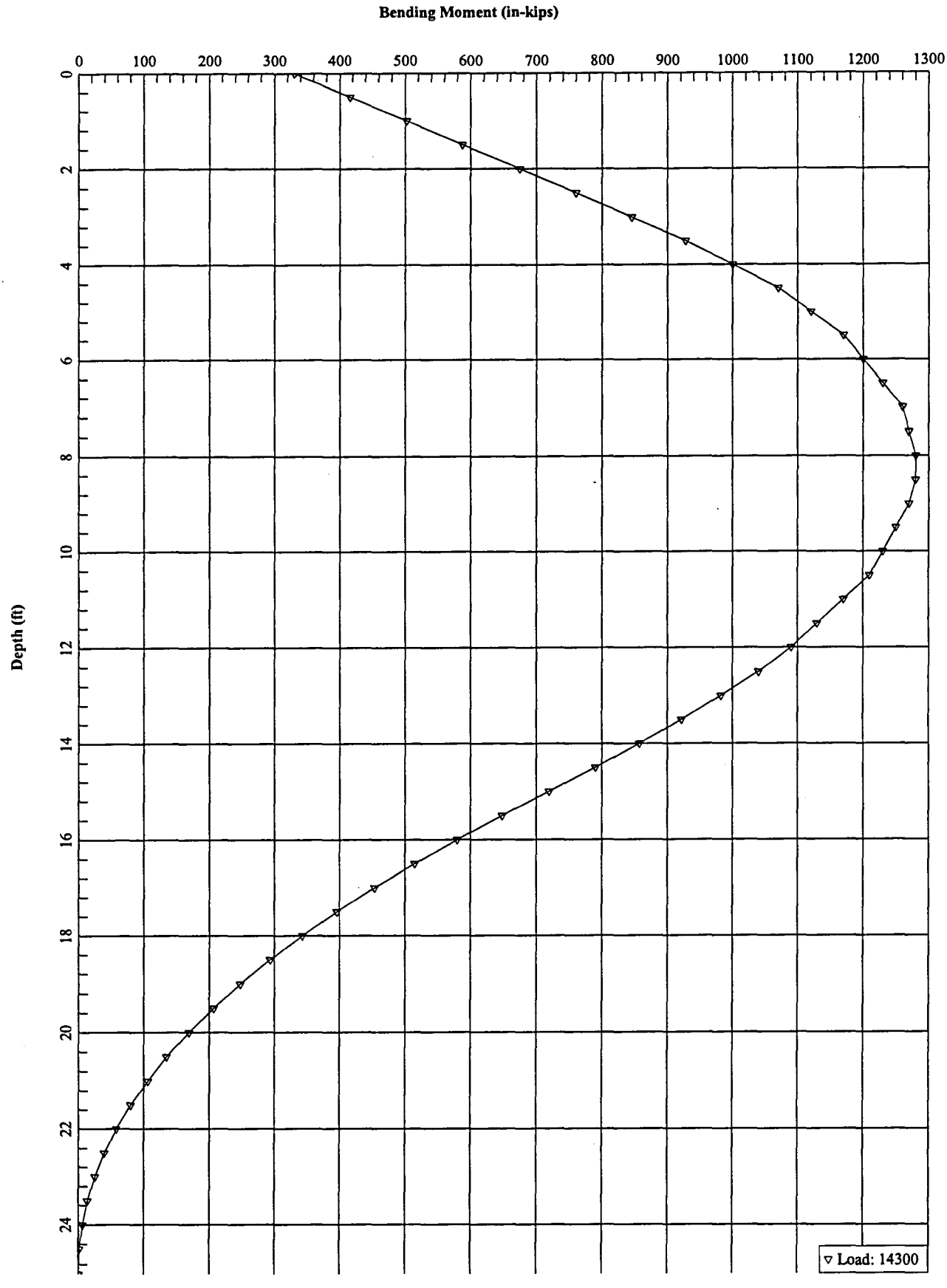
Bending Moment (in-kips)
0
100
200
300
400
500
600
700
800
900
1000
1100
1200
1300
Depth (ft)
0
2
4
6
8
10
12
14
16
18
20
22
24
Load: 14300

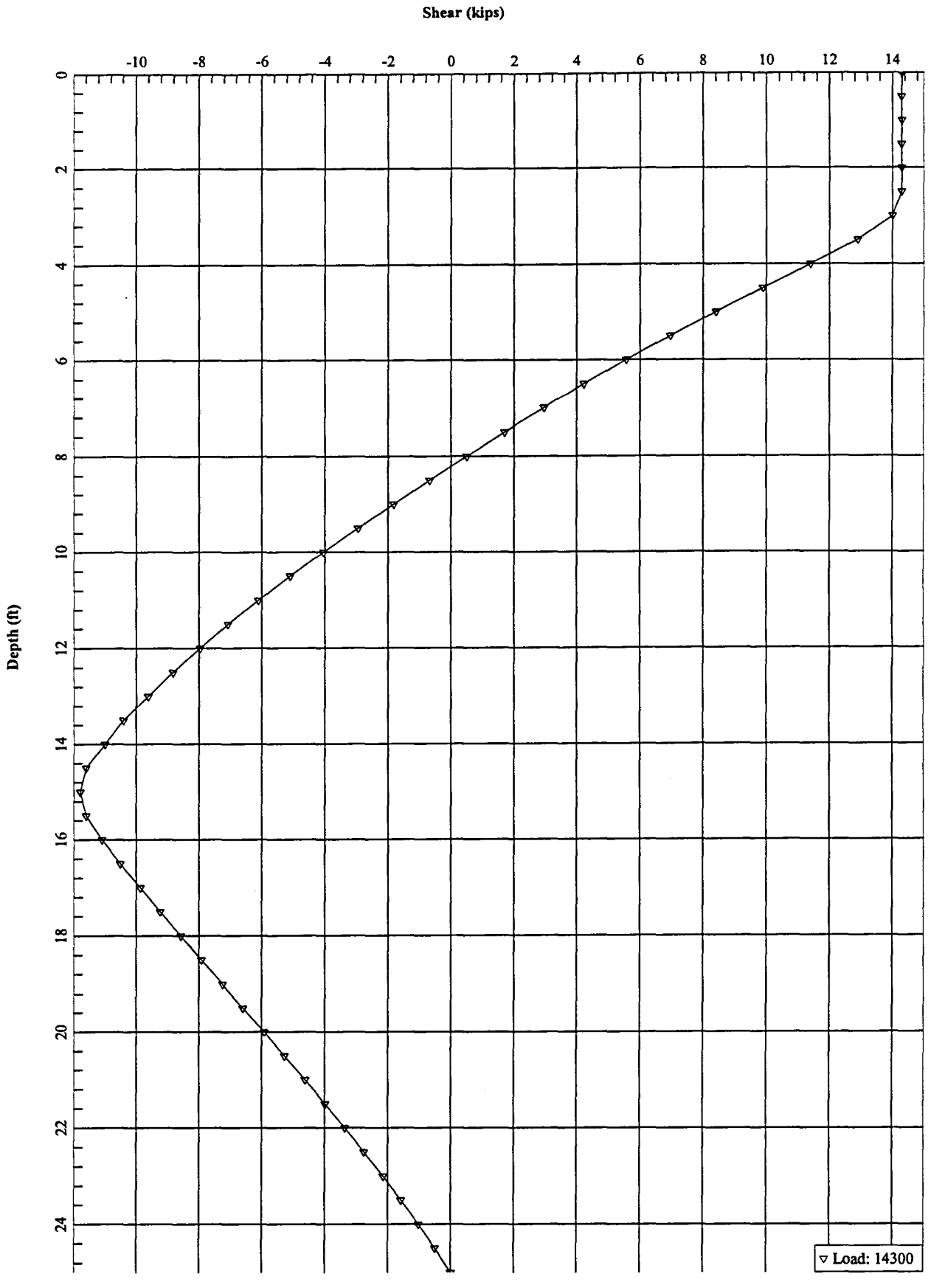
Shear (kips)
-10
-8
-6
-4
-2
0
2
4
6
8
10
12
14
Depth (ft)
0
2
4
6
8
10
12
14
16
18
20
22
24
Load: 14300

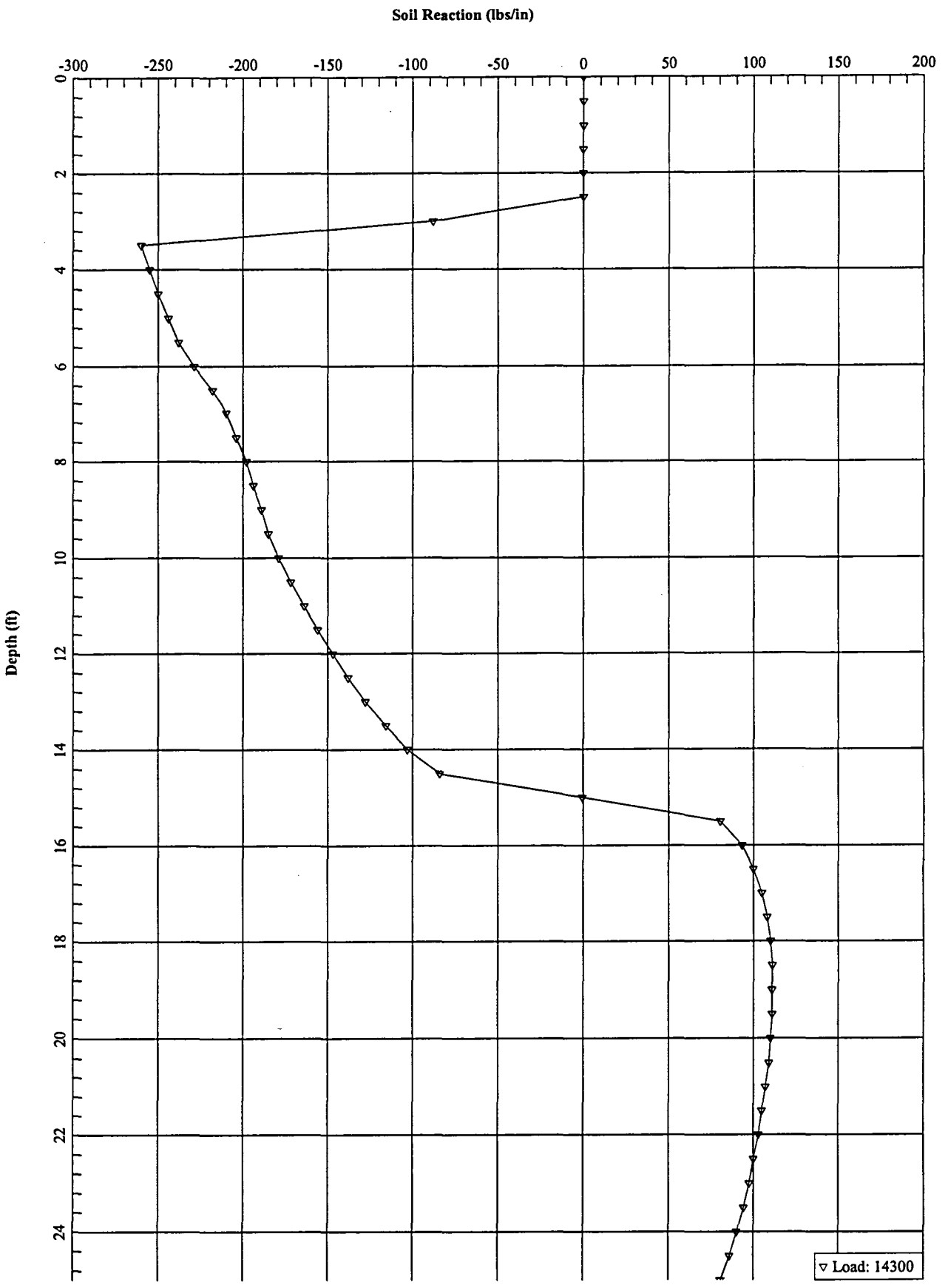
Soil Reaction (lbs/in)
-300
-250
-200
-150
-100
-50
0
50
100
150
200
Depth (ft)
0
2
4
6
8
10
12
14
16
18
20
22
24
Load: 14300

depth= 0 - 348; Stiff clay w/o free water

unit wt.= 0.0637
Ø= 0; c= 2.778

depth= 348 - 1000; Sand

unit wt.= 0.0665
Ø= 30; c= 0.78

Input Verification only
DPC 6/02

```
*************************************************************************
*                              IAI-RECOL                                *
*                        Reinforced Column Design                       *
*                                                                       *
*                                                                       *
*                    By: Imbsen and Associates, Inc.                    *
*                      Version 3.3.1     12-OCT-99                      *
*************************************************************************
```

********** Licensed to: DMJM - Phoenix, AZ **********

87PEDDS1.doc

Project Title:87th Ped Bridge

```
COLUMN TYPE                    =  9  (CIRCULAR)
CONCRETE LOOPS                 =  1
TOTAL NO. OF CONCRETE COORD.   = 40
STEEL REBAR PATTERN            =  4  (CONCENTRIC LOOPS)
NUMBER OF STEEL REBAR LOOPS    =  1
TOTAL NO. OF STEEL REBARS      = 12
PLOT TYPE                      =  0  (NO PLOT)
DESIGN TYPE                    =  2  (CHECK)
PERCENT STEEL LIMITS           =     (1.00 % MIN.  8.00 % MAX.)
```

```
*************
* BENT DATA *
*****************************************************************************

NUMBER OF COLUMNS IN BENT                    =     2
OUT TO OUT DISTANCE (DIAMETER) OF SPIRAL     = 24.00 INCHES
DISTANCE FROM TOP COLUMN PLASTIC HINGE TO
CENTER OF GRAVITY OF THE SUPERSTRUCTURE      =  2.25 FEET
CENTER TO CENTER SPACING OF COLUMNS          = 12.83 FEET
```

```
******************************
* MATERIAL PROPERTIES  (PSI) *
*****************************************************************************

ULTIMATE CONCRETE COMPRESSIVE STRESS - FC =     4000.
YOUNG'S MODULUS FOR CONCRETE         - EC =  3604997.
YOUNG'S MODULUS FOR STEEL BARS       - ES = 29000000.
ULTIMATE CONCRETE COMPRESSIVE STRAIN - EO =      .003
YIELDING STRESS FOR STEEL BARS       - FY =    60000.
```

Project Title:87th Ped Bridge

CIRCULAR CROSS-SECTION

HX(IN)
30.00

CONCRETE COORDINATES (INCHES)

COORD	X	Y
1	15.00	0.00
2	14.82	2.35
3	14.27	4.64
4	13.37	6.81
5	12.14	8.82
6	10.61	10.61
7	8.82	12.14
8	6.81	13.37
9	4.64	14.27
10	2.35	14.82
11	0.00	15.00
12	-2.35	14.82
13	-4.64	14.27
14	-6.81	13.37
15	-8.82	12.14
16	-10.61	10.61
17	-12.14	8.82
18	-13.37	6.81
19	-14.27	4.64
20	-14.82	2.35
21	-15.00	0.00
22	-14.82	-2.35
23	-14.27	-4.64
24	-13.37	-6.81
25	-12.14	-8.82
26	-10.61	-10.61
27	-8.82	-12.14
28	-6.81	-13.37
29	-4.64	-14.27
30	-2.35	-14.82
31	0.00	-15.00
32	2.35	-14.82
33	4.64	-14.27
34	6.81	-13.37
35	8.82	-12.14
36	10.61	-10.61
37	12.14	-8.82
38	13.37	-6.81
39	14.27	-4.64
40	14.82	-2.35

Project Title:87th Ped Bridge

CONCENTRIC CIRCLE PATTERN

LOOP	RADIUS (IN)	AREA (IN**2)	BARS
1	11.06	0.60	12

STEEL REBAR COORDINATES (INCHES)

COORD	X	Y
1	11.06	0.00
2	9.58	5.53
3	5.53	9.58
4	0.00	11.06
5	-5.53	9.58
6	-9.58	5.53
7	-11.06	0.00
8	-9.58	-5.53
9	-5.53	-9.58
10	0.00	-11.06
11	5.53	-9.58
12	9.58	-5.53

THE MAIN LONGITUDINAL STEEL IS ASSUMED TO BE # 7 BARS.

***WARNING: THE CONCRETE COVER IS GREATER THAN 2 INCHES IN THE X-DIRECTION

***WARNING: THE CONCRETE COVER IS GREATER THAN 2 INCHES IN THE Y-DIRECTION

```
*************************
* INITIAL REFERENCE DATA *
*************************************************************************

TOTAL AREA OF THE SECTION                AG =      4.89 FT**2
NOMINAL AXIAL LOAD STRENGTH              PO =   2800.97 KIPS
TOTAL REINFORCEMENT AREA                AST =      7.20 IN**2
PERCENT STEEL                             =      1.02 %

GROSS MOMENT OF INERTIA ABOUT Y-AXIS   IYC =      1.90 FT**4
GROSS MOMENT OF INERTIA ABOUT X-AXIS   IXC =      1.90 FT**4

STEEL MOMENT OF INERTIA ABOUT Y-AXIS   IYS =    0.0212 FT**4
STEEL MOMENT OF INERTIA ABOUT X-AXIS   IXS =    0.0212 FT**4
```

```
**********************************
* COLUMN LOAD DATA (KIP, KIP-FT) *
**************************************************************************
```

LOAD NAME: Abut loading - Top of DS
FOOTING DATA FILE: NO
TYPE FOOTING:

SEISMIC ANALYSIS SPECIFICATIONS:

DESIGN CRITERIA (SDC)	PERFORMANCE CATEGORY (SPC)
CAL	

MOMENT DISTRIBUTION FACT :---TOP---: DAY	DAX	:---BOTTOM---: DBY	DBX	PERCENT IMPACT	COLUMN LENGTH (FEET)	STEEL TIE=1 SPIRAL=0	LOCATION TOP=1 BOTTOM=0	DUCTILITY FACTOR (Z)
0.99	0.99	0.00	0.00	30.00	15.32	0	1	5.00

COLUMN GROUP LOADS - SERVICE (KIP, KIP-FT)

	DEAD LOAD	PRE STRESS	TRANS MY-MAX	LONG MX-MAX	AXIAL N-MAX	WIND	WL	LF	CF-MY	TEMP	SF& BY
			:---- LL+IMPACT ---:								
			CASE 1	CASE 2	CASE 3						
MY	26.	0.	0.	0.	0.	31.	0.	0.	0.	0.	0.
MX	27.	0.	0.	0.	0.	0.	0.	0.	0.	20.	106.
P	31.	0.	0.	0.	10.	-12.	0.	0.	0.	0.	0.
PMY			0.	0.	0.				0.		
PMX			0.	0.	0.				0.		
P			0.	0.	0.				0.		

COLUMN SEISMIC AND ARBITRARY LOADS (KIP, KIP-FT)

(ARS)	UNREDUCED SEISMIC CASE 1 MAX TRAN	CASE 2 MAX LONG	ARBITRARY LOADS SERVICE AL1	SERVICE AL2	ARBITRARY LOADS FACTORED AL1	FACTORED AL2
MY TRAN	0.	0.	0.	0.	0.	0.
MX LONG	0.	0.	0.	0.	0.	0.
P AXIAL	0.	0.	0.	0.	0.	0.

****
* FACTORED LOADS FOR COLUMN DESIGN CHECK (KIP, KIP-FT) *
****

APPLIED FACTORED MOMENTS ARE MAGNIFIED FOR SLENDERNESS IN ACCORDANCE WITH CALTRANS BRIDGE DESIGN SPECIFICATIONS. (ART 8.16.5)

LENGTH = 15.320 FT FC = 4.00 KSI FY = 60.00 KSI
STEEL = 1.02 % AST = 7.20 SQ IN

		:------ APPLIED FACTORED ------:				CAPACITY			
GROUP	CASE	TRANS MY	LONG MX	COMB M	AXIAL P	(PHI*MN) MU	PHI	RATIO MU/M	
IH	1	27.	167.	169.	30.	378.	0.88	2.23	OK
IH	2	27.	167.	169.	30.	378.	0.88	2.23	OK
IH	3	36.	178.	181.	63.	395.	0.87	2.18	OK
IP	1	27.	167.	169.	30.	378.	0.88	2.23	OK
IP	2	27.	167.	169.	30.	378.	0.88	2.23	OK
IP	3	36.	177.	180.	40.	383.	0.88	2.12	OK
II		67.	166.	179.	14.	369.	0.89	2.05	OK
III	1	39.	167.	171.	25.	375.	0.89	2.19	OK
III	2	39.	167.	171.	25.	375.	0.89	2.19	OK
III	3	48.	177.	184.	49.	388.	0.87	2.11	OK
IV	1	27.	194.	196.	30.	377.	0.88	1.92	OK
IV	2	27.	194.	196.	30.	377.	0.88	1.92	OK
IV	3	36.	205.	208.	54.	390.	0.87	1.88	OK
V		65.	186.	197.	13.	368.	0.89	1.87	OK
VI	1	37.	186.	190.	24.	374.	0.89	1.97	OK
VI	2	37.	186.	190.	24.	374.	0.89	1.97	OK
VI	3	46.	196.	202.	47.	387.	0.87	1.92	OK
VII	1	27.	28.	39.	31.	496.	1.18	12.79	OK
VII	2	27.	28.	39.	31.	496.	1.18	12.79	OK

NOTE: FOR CALTRANS AND SPC-C AND SPC-D ONLY THE UNREDUCED SEISMIC MOMENTS ARE REDUCED BY THE Z OR R FACTOR. FOR SPC-B BOTH THE UNREDUCED SEISMIC AXIAL AND MOMENTS ARE REDUCED BY THE Z OR R FACTOR.

```
*************************************************
* MOMENT MAGNIFICATION AND BUCKLING CALCULATIONS *
*************************************************************************

REFERENCE: "CALTRANS BRIDGE DESIGN SPECIFICATIONS" (ART 8.16.5)
          (COLUMN ASSUMED TO BE UNBRACED AGAINST SIDESWAY.)

MAGY   = MOMENT MAGNIFACTION FACTOR ABOUT Y-AXIS
MAGX   = MOMENT MAGNIFACTION FACTOR ABOUT X-AXIS

PCY    = CRITICAL BUCKLING LOAD ABOUT Y-AXIS
PCX    = CRITICAL BUCKLING LOAD ABOUT X-AXIS

KY     = EFFECTIVE LENGTH FACTOR ABOUT Y-AXIS =  2.10
KX     = EFFECTIVE LENGTH FACTOR ABOUT X-AXIS =  2.10

KY*L/R = SLENDERNESS RATIO ABOUT Y-AXIS       = 52.
KX*L/R = SLENDERNESS RATIO ABOUT X-AXIS       = 52.

IYS    = STEEL MOMENT OF INERTIA ABOUT Y-AXIS =   0.0212 FT**4
IXS    = STEEL MOMENT OF INERTIA ABOUT X-AXIS =   0.0212 FT**4
```

		MOMENT MAGNIFICATION			CRACKED TRANSFORMED SECTION		CRITICAL BUCKLING		AXIAL
GR	CA	TRAN MAGY	LONG MAGX	COMB MAG	E*IY	E*IX	TRAN PCY	LONG PCX	LOAD P
					(KIP-FT**2)	(KIP-FT**2)	(KIPS)	(KIPS)	(KIPS)
IH	1	1.013	1.008	1.008	271454.	466630.	2588.	4450.	30.
IH	2	1.013	1.008	1.008	271454.	466630.	2588.	4450.	30.
IH	3	1.029	1.017	1.018	271454.	449914.	2588.	4290.	63.
IP	1	1.013	1.008	1.008	271454.	466630.	2588.	4450.	30.
IP	2	1.013	1.008	1.008	271454.	466630.	2588.	4450.	30.
IP	3	1.018	1.011	1.011	271454.	449914.	2588.	4290.	40.
II		1.004	1.004	1.004	389732.	466630.	3716.	4450.	14.
III	1	1.009	1.006	1.007	322510.	466630.	3075.	4450.	25.
III	2	1.009	1.006	1.007	322510.	466630.	3075.	4450.	25.
III	3	1.019	1.013	1.014	311635.	449914.	2972.	4290.	49.
IV	1	1.013	1.008	1.008	271454.	475963.	2588.	4539.	30.
IV	2	1.013	1.008	1.008	271454.	475963.	2588.	4539.	30.
IV	3	1.024	1.014	1.015	271454.	460429.	2588.	4390.	54.
V		1.004	1.003	1.003	389732.	475963.	3716.	4539.	13.
VI	1	1.009	1.006	1.006	322510.	475963.	3075.	4539.	24.
VI	2	1.009	1.006	1.006	322510.	475963.	3075.	4539.	24.
VI	3	1.018	1.012	1.013	311635.	460429.	2972.	4390.	47.
VII	1	1.000	1.000	1.000	271454.	271454.	2588.	2588.	31.
VII	2	1.000	1.000	1.000	271454.	271454.	2588.	2588.	31.

Project Title:87th Ped Bridge

COLUMN SERVICE LOADS (KIP, K-FT) AND MAXIMUM WORKING STRESSES (PSI)

YOUNG S MODULUS FOR CONCRETE - EC = 3604997. PSI
MODULAR RATIO (ES/EC) - N = 8.0

		:--- SERVICE LOADS (KIP, K-FT) ---:				:--- MAX STRESS (PSI) ---:		
GP	CASE	TRANS MY	LONG MX	COMB M	AXIAL P	CONC COMP	STEEL TEN	STEEL COMP
IH	1	27.	134.	137.	31.	1398.	22970.	5760.
IH	2	27.	134.	137.	31.	1398.	22970.	5760.
IH	3	27.	134.	137.	41.	1377.	21301.	5884.
II		47.	108.	117.	15.	1214.	21718.	4936.
III	1	29.	108.	111.	22.	1142.	19043.	4466.
III	2	29.	108.	111.	22.	1142.	19043.	4466.
III	3	29.	108.	111.	30.	1125.	17708.	4579.
IV	1	22.	124.	126.	25.	1293.	21764.	5309.
IV	2	22.	124.	126.	25.	1293.	21764.	5309.
IV	3	22.	124.	126.	33.	1277.	20416.	5411.
V		42.	111.	118.	13.	1231.	22123.	4865.
VI	1	26.	111.	114.	19.	1169.	19996.	4611.
VI	2	26.	111.	114.	19.	1169.	19996.	4611.
VI	3	26.	111.	114.	27.	1155.	18794.	4713.
DL		27.	28.	39.	31.	339.	3177.	1745.

****
* PROBABLE PLASTIC MOMENT (1.3 X NOMINAL MOMENT) (KIP, KIP-FT) *
****

CODE (8.16.4.4) AND MEMO TO DESIGNERS 15-10

FC = 4.00 KSI FY = 60.00 KSI
EO = 0.0030 IN/IN AST = 7.20 SQ IN

ANGLE	TRANS MPY	LONG MPX	COMB MP	AXIAL P	P-BALANCE (APPROX)
90.0	953.2	0.0	953.2	1680.4	1064.
	1033.6	0.0	1033.6	1400.3	
	1067.1	0.0	1067.1	1120.2	
	1044.8	0.0	1044.8	840.5	
	942.0	0.0	942.0	560.4	
	770.1	0.0	770.1	280.3	
	549.4	0.0	549.4	31.2	
	519.9	0.0	519.9	0.2	
	372.5	0.0	372.5	-139.8	
	208.4	0.0	208.4	-280.0	

DESIGN ASSUMPTIONS:

1. ALL COLUMNS ARE THE SAME I.E., PRISMATIC, EQUAL LENGTH, EQUAL SPACING.
2. PLASTIC HINGES FORM AT THE TOP AND BOTTOM OF THE COLUMNS.
3. THE DISTANCE BETWEEN THE PLASTIC HINGES IS TAKEN AS THE COLUMN LENGTH.
4. THE OVER-TURNING FORCE ACTS THROUGH THE C.G. OF THE SUPERSTRUCTURE AT A DISTANCE 'CGS' ABOVE THE TOP OF THE COLUMN.
5. THE COLUMNS ARE NUMBERED FROM LEFT TO RIGHT AND THE OVERTURNING FORCE ACTS TO THE RIGHT.

DETERMINATION OF COLUMN LATERAL REINFORCEMENT

NUMBER OF COLUMNS IN BENT		=	2	
OUT TO OUT DISTANCE (DIAMETER) OF LATERAL REINFORCEMENT		=	24.00	IN
DISTANCE FROM TOP COLUMN PLASTIC HINGE TO CENTER OF GRAVITY OF SUPERSTURCTURE		=	2.25	FT
CENTER TO CENTER SPACING OF COLUMNS		=	12.83	FT
COMPRESSIVE STRENGTH OF CONCRETE	- FC	=	4.00	KSI
YIELD STRENGTH OF REINFORCEMENT	- FY	=	60.00	KSI
CONCRETE GROSS AREA (2" COVER)	- AG	=	4.28	FT**2
CONCRETE CORE AREA	- AC	=	3.14	FT**2
TRANSVERSE DIRECTION	- BW	=	24.00	IN
TRANSVERSE DIRECTION	- D	=	19.20	IN
LONGITUDINAL DIRECTION	- BW	=	24.00	IN
LONGITUDINAL DIRECTION	- D	=	19.20	IN

AMOUNT OF REINFORCEMENT CONFORMS TO THE FOLLOWING BRIDGE DESIGN SPECIFICATIONS:

CASE A - CONFINEMENT REINFORCEMENT - (CODE 8.18.2.2)

```
PS1 = .45 (AG/AC - 1) FC/FY (.5 + 1.25 P/(FC * AG))
PS2 =             .12 FC/FY (.5 + 1.25 P/(FC * AG))
PS3 = .45 (AG/AC - 1) FC/FY
```

CASE B - APPLIED SHEAR REINFORCEMENT - (CODE 8.16.6)

```
VU <= PHI * VN                (8-46)
VN  = VC + VS                 (8-47)
VC  = 2 * SQRT(FC) * BW * D   (8-51)
VS  = (AV * FY * D) / S       (8-53)
```

CASE C - MINIMUM SHEAR REINFORCEMENT - (CODE 8.19.1.1)

```
AV = (50 * BW * S)/FY         (8-63)
```

****
* TRANSVERSE DIRECTION *
****

LOADS RESULTING FROM PLASTIC HINGING OF COLUMN NO. 1

TOP OF COLUMN	AXIAL FORCE	P =	18.	KIPS
	PLASTIC MOMENT	MP =	0.	K-FT
BOTTOM OF COLUMN	AXIAL FORCE	P =	29.	KIPS
	PLASTIC MOMENT	MP =	548.	K-FT

DESIGN SHEAR FORCE:	VU =	36.	KIPS
CONCRETE FACTORED SHEAR STRENGTH:	.85 * VC =	5.	KIPS
STEEL FACTORED SHEAR STRENGTH:	.85 * VS =	31.	KIPS

NOTE: THE AVERAGE COMPRESSIVE STRESS (P/AC) IS LESS THAN .10 * FC.
THEREFORE, VC IS LESS THAN 2 * SQRT(FC) * B * D (CODE 8.16.6.11.4(A))

MAXIMUM CENTER TO CENTER SPACING (PITCH) OF LATERAL REINFORCEMENT. (IN)

BAR SIZE	CASE A CONFINEMENT	CASE B APP SHEAR	CASE C MIN SHEAR	CONFINEMENT RATIO	EQUATION
4	3.005	12.731	20.000	0.01083	3
5	4.632	19.733	31.000	0.01083	3
6	6.521	28.008	44.000	0.01083	3
7	8.846	38.193	60.000	0.01083	3
8	11.582	50.287	79.000	0.01083	3

```
************************
* TRANSVERSE DIRECTION *
****************************************************************************
```

LOADS RESULTING FROM PLASTIC HINGING OF COLUMN NO. 2

TOP OF COLUMN	AXIAL FORCE	P =	44.	KIPS
	PLASTIC MOMENT	MP =	0.	K-FT
BOTTOM OF COLUMN	AXIAL FORCE	P =	55.	KIPS
	PLASTIC MOMENT	MP =	572.	K-FT

DESIGN SHEAR FORCE:	VU =	37.	KIPS
CONCRETE FACTORED SHEAR STRENGTH:	.85 * VC =	12.	KIPS
STEEL FACTORED SHEAR STRENGTH:	.85 * VS =	25.	KIPS

NOTE: THE AVERAGE COMPRESSIVE STRESS (P/AC) IS LESS THAN .10 * FC.
THEREFORE, VC IS LESS THAN 2 * SQRT(FC) * B * D (CODE 8.16.6.11.4(A))

MAXIMUM CENTER TO CENTER SPACING (PITCH) OF LATERAL REINFORCEMENT. (IN)

BAR SIZE	CASE A CONFINEMENT	CASE B APP SHEAR	CASE C MIN SHEAR	CONFINEMENT RATIO	EQUATION
4	3.005	15.473	20.000	0.01083	3
5	4.632	23.983	31.000	0.01083	3
6	6.521	34.040	44.000	0.01083	3
7	8.846	46.419	60.000	0.01083	3
8	11.582	61.118	79.000	0.01083	3

NOTE:

THE UNREDUCED ELASTIC ARS + DEAD LOAD MOMENT (27. K-FT)
IS LESS THAN THE PROBABLE PLASTIC MOMENT (572. K-FT)
THEREFORE, PLASTIC HINGING DOES NOT CONTROL.
(CODE 8.16.6.11.1)

THE DESIGNER MUST CHECK THE SHEAR REINFORCEMENT (CASE B)
FOR GROUP LOADS I TO VII
(USE UNREDUCED ELASTIC ARS + DEAD LOAD SHEAR FOR GROUP VII)

THE MAXIMUM SPACING OF LATERAL REINFORCEMENT SHALL NOT EXCEED ONE-FIFTH OF THE LEAST DIMENSION OF THE COLUMN, 6 TIMES THE NOMINAL DIAMETER OF THE LONGITUDINAL REINFORCEMENT, OR 8 INCHES. (8.21.1.1)

THE MINIMUM SPACING SHALL NOT BE LESS THAN 1.5 BAR DIAMETERS, 1.5 TIMES THE MAXIMUM SIZE COARSE AGGREGATE, OR 1.5 INCHES. (8.21.1)

FACTORED SHEAR STRENGTH .85 * (VS + VC) BASED ON MAXIMUM AND MINIMUM CENTER TO CENTER SPACING (PITCH) OF LATERAL REINFORCEMENT:

			1.0" AGG	
BAR SIZE	MAX PITCH (IN)	SHEAR STRENGTH (KIPS)	MIN PITCH (IN)	SHEAR STRENGTH (KIPS)
4	5.250	124.	2.000	245.
5	5.250	165.	2.125	248.
6	5.250	214.	2.250	248.
7	5.250	248.	2.375	248.
8	5.250	248.	2.500	248.

NOTE:

THE ABOVE FACTORED SHEAR STRENGTH VALUES ARE BASED ON A FACTORED CONCRETE SHEAR STRENGTH (.85 * VC) OF 50. KIPS.

IF THE APPLIED AXIAL LOAD IS LESS THAN 181. KIPS, THEN THE FACTORED CONCRETE SHEAR STRENGTH DECREASES FROM 50. KIPS TO 0. KIPS AND THE VALUES IN THE ABOVE TABLE MUST BE APPROPRIATELY ADJUSTED.

IF THE DESIGNER SELECTS A LATERAL BAR SIZE DIFFERENT THAN THE ONE ASSUMED, HE SHOULD CONSIDER ADJUSTING THE RADIUS OF THE MAIN STEEL BAR LOOP AND RE-RUN THE PROBLEM.

MAXIMUM SHEAR CAPACITY OF THE SECTION:
VMAX = .85 * 10 * SQRT(FC) * B * D = 248. KIPS

```
**************************
* LONGITUDINAL DIRECTION *
**************************************************************************
```

LOADS RESULTING FROM PLASTIC HINGING OF COLUMN NO. 1

TOP OF COLUMN	AXIAL FORCE	P =	31.	KIPS
	PLASTIC MOMENT	MP =	0.	K-FT
BOTTOM OF COLUMN	AXIAL FORCE	P =	42.	KIPS
	PLASTIC MOMENT	MP =	560.	K-FT

DESIGN SHEAR FORCE:	VU =	37.	KIPS
CONCRETE FACTORED SHEAR STRENGTH:	.85 * VC =	8.	KIPS
STEEL FACTORED SHEAR STRENGTH:	.85 * VS =	28.	KIPS

NOTE: THE AVERAGE COMPRESSIVE STRESS (P/AC) IS LESS THAN .10 * FC.
THEREFORE, VC IS LESS THAN 2 * SQRT(FC) * B * D (CODE 8.16.6.11.4(A))

MAXIMUM CENTER TO CENTER SPACING (PITCH) OF LATERAL REINFORCEMENT. (IN)

BAR SIZE	CASE A CONFINEMENT	CASE B APP SHEAR	CASE C MIN SHEAR	CONFINEMENT RATIO	EQUATION
4	3.005	13.967	20.000	0.01083	3
5	4.632	21.649	31.000	0.01083	3
6	6.521	30.728	44.000	0.01083	3
7	8.846	41.901	60.000	0.01083	3
8	11.582	55.170	79.000	0.01083	3

NOTE:

THE UNREDUCED ELASTIC ARS + DEAD LOAD MOMENT (28. K-FT)
IS LESS THAN THE PROBABLE PLASTIC MOMENT (560. K-FT)
THEREFORE, PLASTIC HINGING DOES NOT CONTROL.
(CODE 8.16.6.11.1)

THE DESIGNER MUST CHECK THE SHEAR REINFORCEMENT (CASE B)
FOR GROUP LOADS I TO VII
(USE UNREDUCED ELASTIC ARS + DEAD LOAD SHEAR FOR GROUP VII)

THE MAXIMUM SPACING OF LATERAL REINFORCEMENT SHALL NOT EXCEED ONE-FIFTH OF THE LEAST DIMENSION OF THE COLUMN, 6 TIMES THE NOMINAL DIAMETER OF THE LONGITUDINAL REINFORCEMENT, OR 8 INCHES. (8.21.1.1)

THE MINIMUM SPACING SHALL NOT BE LESS THAN 1.5 BAR DIAMETERS, 1.5 TIMES THE MAXIMUM SIZE COARSE AGGREGATE, OR 1.5 INCHES. (8.21.1)

FACTORED SHEAR STRENGTH .85 * (VS + VC) BASED ON MAXIMUM AND MINIMUM CENTER TO CENTER SPACING (PITCH) OF LATERAL REINFORCEMENT:

BAR SIZE	MAX PITCH (IN)	SHEAR STRENGTH (KIPS)	1.0" AGG MIN PITCH (IN)	SHEAR STRENGTH (KIPS)
4	5.250	124.	2.000	245.
5	5.250	165.	2.125	248.
6	5.250	214.	2.250	248.
7	5.250	248.	2.375	248.
8	5.250	248.	2.500	248.

NOTE:

THE ABOVE FACTORED SHEAR STRENGTH VALUES ARE BASED ON A FACTORED CONCRETE SHEAR STRENGTH (.85 * VC) OF 50. KIPS.

IF THE APPLIED AXIAL LOAD IS LESS THAN 181. KIPS, THEN THE FACTORED CONCRETE SHEAR STRENGTH DECREASES FROM 50. KIPS TO 0. KIPS AND THE VALUES IN THE ABOVE TABLE MUST BE APPROPRIATELY ADJUSTED.

IF THE DESIGNER SELECTS A LATERAL BAR SIZE DIFFERENT THAN THE ONE ASSUMED, HE SHOULD CONSIDER ADJUSTING THE RADIUS OF THE MAIN STEEL BAR LOOP AND RE-RUN THE PROBLEM.

MAXIMUM SHEAR CAPACITY OF THE SECTION:
VMAX = .85 * 10 * SQRT(FC) * B * D = 248. KIPS

DMJM HARRIS	PROJECT: BHOC 83rd Ave Ped Bridge	JOB NO. 6833	SHEET 1 of 1
		DESIGNED BY SEO	DATE Aug 02
SUBJECT: Table of Contents		CHECKED BY	DATE

Description of Calculation	Sheet
Superstructure Loads	1
Anchor Bolts / Min. Seat Requirements	2
Bearing Pad Design	3 ~ 5
Abutment Cap Design	6 ~ 12
Wingwall Design	13 ~ 18
Retaining Wall Design	19 ~ 29
Drilled Shaft Design	30 ~ 33
Geometry	34 ~ 39
Quantities.	40 ~ 52

Registered Professional Engineer (Civil)
CERTIFICATE NO.
23984
MARK K.
GILLILAND
Date Signed 9/10/02
ARIZONA, U.S.A.

DMJM HARRIS	PROJECT: BHOC 83RD AVE PED BRIDGE	JOB NO. 6888	SHEET 1 of 12
		DESIGNED BY S.E.D	DATE JUN 02
SUBJECT: SUBSTRUCTURE DESIGN		CHECKED BY BPC	DATE 6/02

LOADS FROM SUPERSTRUCTURE

I) LIVE LOADS

1. H10:

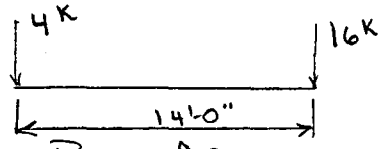

MAXIMUM AXLE LOAD PER ABUTMENT = 18.83 KIPS

2. PEDESTRIAN LOAD:

BRIDGE LENGTH = 48'-0" , ℄ BRG TO ℄ BRG = 46.20 ft

BRIDGE CLEAR WIDTH = 12 ft

A_1 = DECK INFLUENCE AREA = (48 ft)(12 ft) = 576 SF > 400 SF

$w = 85(0.25 + (15/\sqrt{576})) = 74.4$ psf < 65 psf OK

USE 74.4 psf

TOTAL LIVE LOAD PER ABUTMENT = (74.4 psf)(576 SF) ÷ 2 = 21.43 (control)

3. VEHICLE LOAD WILL NOT CONTROL

MAXIMUM LIVE LOAD REACTION PER ABUTMENT = 21.43 K.

II) DEAD LOAD

1. MAXIMUM TRUSS WEIGHT INCLUDING METAL DECKING (INFORMATION OBTAINED FROM SUPPLIERS).

(50 PSF)(48 ft)(12 ft) = 28.8 Kips

2. CONCRETE DECKING.

ASSUME REINFORCED CONCRETE, w = 115 pcf

FLOOR BEAM SPACING = 8 ft

ASSUMED CORRUGATED DEPTH = 2 1/2"

TOP CLEAR TO REINFORCING = 1 1/2"

BOTT. CLEAR TO REINFORCING = 1"

4 @ BOTH WAYS 1"

$(4\frac{3}{4}''\ A_{vg})(1/12)(12\ ft)(48\ ft)(0.115\ K/ft^3) = 26.3$ Kips

TOTAL DEAD LOAD REACTION PER ABUTMENT INCLUDING 10% = 30.3 K.

DMJM HARRIS	PROJECT: BHOC 83RD AVE PED BRIDGE	JOB NO. 6888	SHEET 2 of 12
		DESIGNED BY SED	DATE JUN 02
SUBJECT: SUPERSTRUCTURE TO SUBSTRUCTURE CONN		CHECKED BY DPK	DATE 6/02

AASHTO SECTION 10.29.6 : ANCHOR BOLTS

SPANS 50 ft or less : 2 bolts/Brg, 1" ϕ, SET 10" IN THE MASONRY.
ANCHORS SHALL BE SWEDGED OR THREADED.

CHECK 1" ϕ BOLTS FOR HORIZONTAL LOADS FROM SEISMIC SPC "A"

TOTAL LOAD = (0.2)(30.3K)(1/2)(1/2) = 1.52 Kips/bolt

1.52 K/bolt < Allowable Shear on 1" ϕ bolt ≈ 7.9 Kips OK

AASHTO 5.3 : MIN SEAT REQUIREMENTS

$N = (8 + 0.02L + 0.08H)(1 + 0.000125S^2)$

$N = (8 + (0.02)(48.0') + (0.08)(0))(1)$

$N \approx 9''$

$N_{PROVIDED} = 1'\text{-}9'' > 9''$ OK.

DMJM HARRIS	PROJECT: BHOC 83RD AVE PED. BRIDGE	JOB NO. 6888	SHEET 3 of 12
		DESIGNED BY SEO	DATE JUN 02
SUBJECT: BEARING PAD DESIGN		CHECKED BY DPC	DATE 6/02

LOADS FROM SUPERSTRUCTURE

LL/PAD = 10.72 K

DL/PAD = 15.15 K.

DEFLECTIONS (FOR BRG PAD DESIGN)

- MAXIMUM PEDESTRIAN LL DEFLECTION (L/500) = (46.26x12)/500 = 1.11"
- MAXIMUM DEAD LOAD DEFLECTION (TREAT AS % OF LL DEFLECTION)
  [(1.0(28.8K + 26.3K)/(21.43K x 2)] (1.11") = 1.57"
- MAXIMUM CHANGE IN ELEVATION = 0.78 ft

FRAME SHORTENING

- COEFF. OF EXPANSION = 0.0000065/°F

DMJM	PROJECT: BHOC 83rd Ave Pedestrian Bridge	JOB NO. 6888.002	SHEET 4 OF 12
		DESIGNED BY: SEO	DATE 7-02
SUBJECT: BEARING PAD DESIGN - Abutments		CHECKED BY: BPC	DATE 6/02

ELASTOMERIC BEARING PAD DESIGN - Method A (Reinforced with Steel)(AASHTO Section 14.6.6)

ABUTMENT NO 1 & 2

DESIGN CRITERIA

SHEAR MODULUS (G) = 130 PSI	C = 6.5 X 10-6
HARDNESS = 55 DURO	TEMP. RANGE = 70 DEG F
1/2 " ELASTOMERIC LAYERS	LONG TERM SHRINK. & CREEP = 1/2 " / 100 FT
14 GA STEEL LAMINATES	GIRDER LENGTH = 46.26 FT
ELASTOMER CREEP = 4%	SHRINKAGE LENGTH = 46.26 FT

DESIGN LOADS

P_{DL} = 15.2 KIPS
P_{LL} = 10.7 KIPS
P_{TL} = 25.9 KIPS

TRY A 8 x 8 BEARING PAD (A = 64 sq. in)

S = Plan Area / Area of Perimeter Free to Bulge
= 8 x 8 / 2 x 0.5 (8 + 8) = 4
σ_{LL} = 10.7 / 8 x 8 = 0.17 ksi
$\sigma_{TL} \leq$ 1.0 ksi
$\sigma_{TL} \leq$ 1.0 GS = 0.52 ksi
σ_{TL} = 15.15 + 10.7 / 8 x 8
= 0.4 ksi < 0.52 ksi ∴ **OK**

SHEAR DEFORMATION

R+S+T = 46.26 ft. x 70 deg F x 0.000006 + 46.26 ft. x 1/2 " / 100 ft = 0.25 in
ADDT'L FRAME Δ = 0 in
$\therefore \Delta_s$ = 0.25 in
$\therefore h_{rt}$ = 2 x 0.25 in = 0.51 in
t_p = 0.5 * 0.51 in / (0.5 in - 0.078 in) = 0.6 in **USE A 2" PAD**
$t_p \leq$ L / 3 = 2.7" & W / 3 = 2.7" ∴ **OK**

COMPRESSIVE DEFLECTION

$\delta_i = \Sigma \epsilon_i h_{ri}$ Where: ϵ_i = Compressive Strain Per Figure 14.6.5.3.3-1 = 4 %
h_{ri} = Thickness of Elastomeric Layer = 1/2"
δ_i = 2 in x 4 = 0.08 in
δ_f = 0.08 in x 1.30 = 0.1 in **< 1/8" OK**

ROTATION

θ_{Grade} = -0.78 ft / 46.26 ft = -0.0169 rads
$\theta_{Prestress}$ = 3.2 x 0 in / 46.26 ft = 0 rads
θ_{DL+LL} = 3.2 x -2.68 in / 46.26 ft = -0.0154 rads
θ_{const} = 0.005 rads
θ_m = 0.0373 rads
$\sigma_{TL} \geq 0.5GS\theta_m(L / h_{rt})^2$
0.5 x 130 psi x 4 x 0.0373 x (8" / 1.69")^2
0.22 ksi < 0.4 ksi ∴ **OK**

REINFORCEMENT

$h_s \geq 3.0 h_{rmax}\sigma_{TL} / Fy$
3.0 * 0.5 * 0.4 / 36 = 0.017 in
$h_s \geq 2.0 h_{rmax}\sigma_{LL} / Fsr$
2.0 * 0.5 * 0.17 / 24 = 0.007 in
h_s = 0.078" ≤ 0.017" ∴ **OK**
7

ABUTMENT NO 1 & 2
USE A 8x8x2 BEARING PAD
DESIGN METHOD A
SHEAR MODULUS = 130 psi
DUROMETER HARDNESS = 55

Table 14.6.5.2-2 Low temperature zones and elastomer grades

Low Temperature Zone	A	B	C	D	E
50 year low temperature (°F)	0	−20	−30	−45	all others
Max. no. of days below 32°F	3	7	14	N/A	N/A
Low temp. elastomer grade without special provisions	0	2	3	4	5
Low temp. elastomer grade with special provisions	0	0	2	3	5

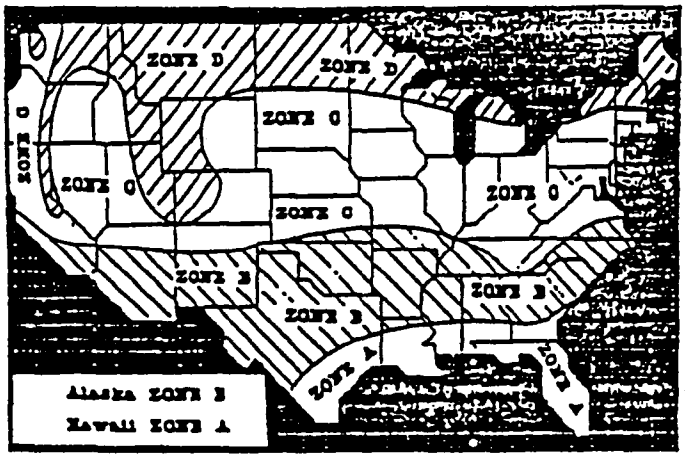

FIGURE 14.6.5.2-1 Map of Low Temperature Zones

Values for ϵ_i shall be determined from test results or by rational analysis. The effects of creep of the elastomer shall be added to the instantaneous deflection when considering long-term deflections. They should be computed from information relevant to the elastomeric compound used. In the absence of material-specific data, the values given in Article 14.6.5.2 shall be used. In the absence of information specific to the particular bearing to be used, Figure 14.6.5.3.3-1 may be used.

14.6.5.3.4 Shear

The horizontal movement of the bridge superstructure, Δ_0, shall be taken as the maximum possible displacement

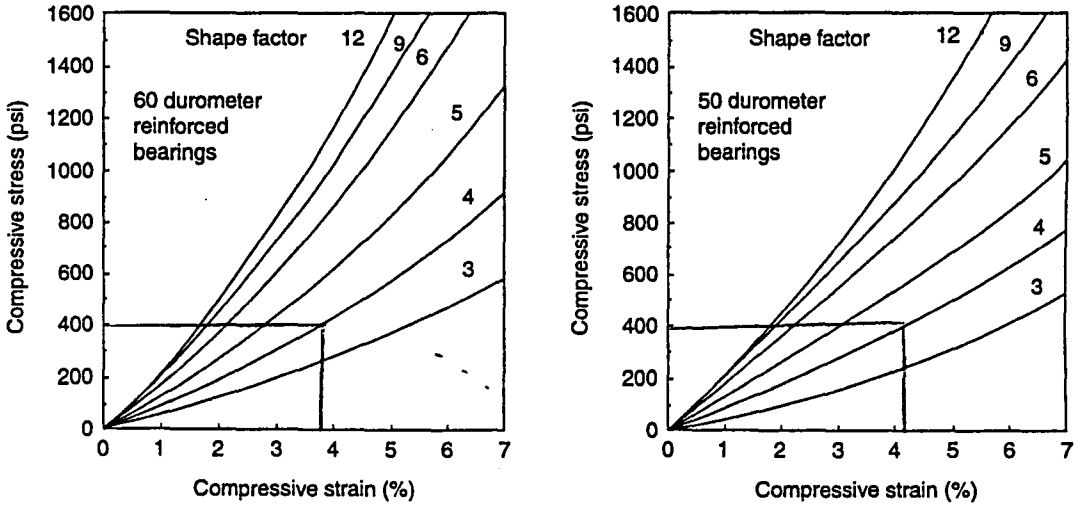

FIGURE 14.6.5.3.3-1 Load Deflection Behavior of Elastomeric Bearings

DMJM HARRIS	PROJECT: BHOC 83RD PED BRIDGE	JOB NO. 6888	SHEET 6 of 12
		DESIGNED BY SEO	DATE JUN 02
SUBJECT: ABUTMENT CAP DESIGN		CHECKED BY DPC	DATE 6/02

LOADING CONDITION 1:

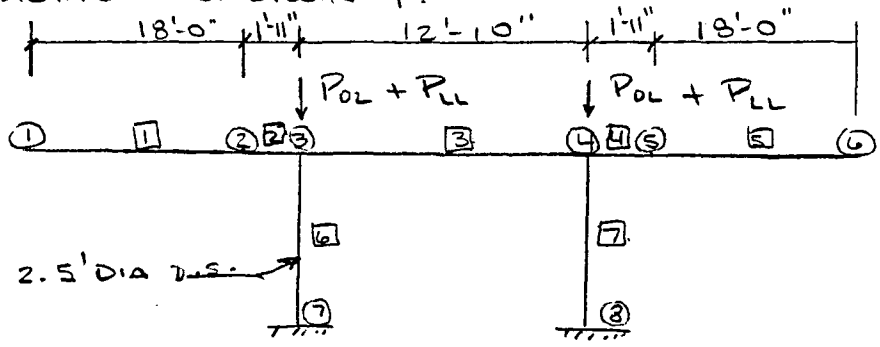

Elev 1086.74

Elev 1070.00

WINGWALL = 1'-2" x 3'-9" Avg Depth

CAP = 3'-0" DEEP x 3'-10" WIDE.

LOADS

✓ $P_{DL\ SUPER}$ = 15.15 K ↓

✓ $P_{DL\ WW}$ = (4'-6" + 3'-0")(0.5)(1'-2")(0.15 KCF) = 0.66 K/ft

✓ P_{LL} = 10.72K / Brg ↓

✓ $P_{DL\ CAP}$ = (3.83')(3.0')(0.15KCF) = 1.72 K/ft ↓

✓ $P_{DL\ BACKWALL}$ = (1.62')(1.16')(0.15KCF) = 0.28 K/ft ↓

✓ $M_{BACKWALL}$ = (0.28K/ft)(1.50 ft) = 0.42K-ft/ft ↻

✓ $P_{APP.\ SEAT}$ = (1.5 SF)(0.15KCF) = 0.3K/ft ↓

✓ $M_{APP.\ SEAT}$ = (0.3 K/ft)(2.58ft) = 0.77 K-ft/ft ↻

✓ P_{DL-DS} = (π/4)(2.5 ft)^2 (0.15 Kcf) = 0.74 K/ft ↓

✓ EARTH PRESSURE, $V_{E_{ABUT}}$ = (1/2)(4.5 ft)^2 (35 psf)(1/1000) = 0.35 K/ft → (ABUT

$V_{E_{WW}}$ = (1/2)(3.75 ft)^2 (35 psf)(1/1000) = 0.25 K/ft → (WING

Surcharge: (2 ft)(35 psf-surcharge)(3.75') = 0.26 K/ft →

DMJM HARRIS	PROJECT: BHOC 83RD AVE PED BRIDGE	JOB NO. 6888	SHEET 7 of 12
		DESIGNED BY SED	DATE JUN 02
SUBJECT: ABUTMENT CAP DESIGN		CHECKED BY DPC	DATE 6/02

WIND ON SUPERSTRUCTURE:

✓ $V_{W\ SUPER\ T}$ = (50 psf Avg)(7'-6")(48'-0")(0.5) = 9.0 K $\xrightarrow{X}$ OR 4.50K/SUP

$M_{W\ SUPER\ T}$ = (9.0 K)(7.5' + (0.5)(3.0 ft))(0.5) = 40.50 K-ft

apply moment as a couple:

(40.50 K-ft)(1/12.83 ft) = 3.16 K ↑↓

OVERTURNING FORCES:

V_{OT} = (20 psf)(48.0 ft)(13'-2")(1/2) = 6.3 K ↑

FORCE IS APPLIED AT (1/4)(13'-2") = 3.3 ft from end of cap

RESULTING REACTIONS AT SUPPORTS = 0.68 K ↓, 5.62 K ↓

R+S+T

H_m = (G)(A)(Δ_s)(1/h_{rt})

G = 130 psi

A = 8 × 8 = 64 in²

Δ_s = 0.25"

h_{rt} = 1.69"

H_m = (130)(64)(0.25")(1/1.69") = 1.23 K < (25.9 K)(0.2) = 5.18 K

V_{R+S+T} = 1.23 K $\xrightarrow{Z}$

$M_{X\ R+S+T}$ = (1.23 K)(0.5)(3.0 ft) = 1.85 K-ft

DMJM HARRIS	PROJECT: BHOC 83RD AVE PED BRIDGE	JOB NO. 6888	SHEET 8 of 12
		DESIGNED BY SED	DATE JUN 02
SUBJECT: ABUTMENT DESIGN		CHECKED BY DPC	DATE 6/02

ANALYSIS

ASD , $f'_c = 4000$ psi $n = 8$ $f_c = 1600$ psi

$f_s = 24000$ psi $E = 3{,}604{,}997$ psi

DEPTH = 36"

WIDTH = 46"

STAAD PRO RESULTS: MEMBER 4, JT 4, LOAD CASE 13

$V_y = 16.30$ K ✓ $M_y = 101.37$ K-ft ✓

$V_z = 10.35$ K ✓ $M_z^{(-)} = 133.97$ K-ft

TORSION = 20.16 K-ft ✓ $M_z^{(+)} =$ IT IS AN NEGATIVE MOMENT

SHEAR, V_y

$V_y = 16.30^K$

$$v_y = \frac{(16.30^K)(1000)}{(46")(31")} = 11.4 \text{ psi}$$

$$d = 36" - 4" - 1/2" - (0.5)(0.79") = 31"$$

$$(1/2)(V_c) = (1/2)(0.95)(4000)^{1/2} = 30.04 \text{ psi} > 11.4 \text{ psi}$$

NO MIN REINF. IS REQUIRED

SHEAR, V_z

$V_z = 10.35^K$

$$v_z = \frac{(10.35^K)(1000)}{(36")(43")} = 6.69 \text{ psi}$$

$$d = 46" - 2" - 1/2" - (1/2)(0.79") = 43"$$

NO MIN REINF. IS REQUIRED

TORSION:

$T = 20.16^K\text{-ft}$

Neglect Torsion if $T_u \le \phi\sqrt{f'_c}\left(\frac{A_{cp}^2}{P_{cp}}\right)$

where $A_{cp} = [46 - (2)(2")][36" - 2" - 4"] = 1260 \text{ in}^2$

$P_{cp} = (46" + 36")(2) = 164"$

$$T \le (0.55)(4000 \text{ psi})^{1/2}\left(\frac{(1260)^2}{164"}\right)(1/12000) = 28.06 \text{ K-ft}$$

$\therefore$ IGNORE TORSIONAL EFFECTS

DMJM HARRIS	PROJECT: BHOC 83RD AVE PED BRIDGE	JOB NO. 6828	SHEET 10 of 12
		DESIGNED BY SED	DATE JUN 02
SUBJECT: ABUTMENT DESIGN		CHECKED BY DPC	DATE 6/02

BENDING, M_y — ASSUME ABUT CAP RESISTS ALL THE MOMENT. (NEGLECT BACKWALL)

$M_y = 101.37$ k-ft

TRY $A_s = 1.23 \text{ in}^2$

$$\rho = \frac{1.23 \text{ in}^2}{(36")(43")} = 0.0008, \quad K = 0.107 \quad J = 0.964$$

$$f_s = \frac{(101.37 \text{ k-ft})(12000)}{(1.23 \text{ in}^2)(0.964)(43.0")} = 23{,}858 \text{ psi} < 24000 \text{ psi} \quad \text{OK}$$

$$f_c = \frac{(2)(101.37 \text{ k-ft})(12000)}{(0.107)(0.964)(36")(43")^2} = 354 \text{ psi} < 1600 \text{ psi} \quad \text{OK}$$

HOWEVER, INCREASE A_s BY (1/3) TO MEET MIN REINF. SAY 4 # 6, $A_s = 1.76 \text{ in}^2$

BENDING, $M_z^{(-)}$ — ASSUME TOP TWO BARS ON BACKWALL RESIST ALL THE MOMENT

$M_z = 133.97$ k-ft

TRY 2 # 8 TO MATCH WINGWALL REINFORCING, $A_s = 1.58 \text{ in}^2$

$$\rho = \frac{1.58 \text{ in}^2}{(14")(51")} = 0.0022, \quad K = 0.170, \quad J = 0.943$$

$$f_s = \frac{(133.97 \text{ k-ft})(12000)}{(0.943)(1.58 \text{ in}^2)(51")} = 21{,}157 \text{ psi} < 24000 \text{ psi} \quad \text{OK}$$

$$f_c = \frac{(2)(133.97 \text{ k-ft})(12000)}{(0.170)(0.943)(14")(51")^2} = 551 \text{ psi} < 1600 \text{ psi} \quad \text{OK}$$

$$\phi M_n = (0.90)\left[(1.58 \text{ in}^2)(60000 \text{ psi})(51" - (1.99)(1/2))\right](1/12000) = 356 \text{ k-ft}$$

$$a = \frac{(1.58 \text{ in}^2)(60000 \text{ psi})}{(0.85)(4000 \text{ psi})(14")} = 1.99"$$

$$(1.2)(M_{cr}) = (1.2)(7.5)(4000 \text{ psi})^{1/2}(14")(54")^2(1/6)(1/12000) = 322.7 \text{ k-ft}$$

$\phi M_n > 1.2 M_{cr}$ OK

DMJM HARRIS	PROJECT: BHOC 83RD AVE PED BRIDGE	JOB NO. 6888	SHEET 11 of 12
		DESIGNED BY SED	DATE JUN 02
SUBJECT: ABUTMENT DESIGN		CHECKED BY DPC	DATE 6/02

BENDING, $M_z^{(-)}$ ASSUME TOP BARS IN ABUT CAP RESIST ALL THE MOMENT.

$M_y = 133.97$ K-ft

TRY $A_s = 2.13 \text{ in}^2$

$$\rho = \frac{2.13 \text{ in}^2}{(46")(33")} = 0.0014 \quad , \quad K = 0.139 \quad J = 0.954$$

$$d = 36" - 2" - 1/2" - (0.5)(0.875") = 33"$$

$$f_s = \frac{(133.97 \text{ K-ft})(12000)}{(0.954)(2.13 \text{ in}^2)(33")} = 23{,}975 \text{ psi} < 24000 \text{ psi} \quad \text{OK}$$

$$f_c = \frac{(2)(133.97 \text{ K-ft})(12000)}{(0.139)(0.954)(46")(33")^2} = 484 \text{ psi} < 1600 \text{ psi} \quad \text{OK}$$

HOWEVER, INCREASE A_s BY (1/3) TO MEET MIN REINF. SAY 4 #8, $A_s = 3.16 \text{ in}^2$

DMJM HARRIS	PROJECT: BHOC 83RD AVE PED BRIDGE	JOB NO. 6888	SHEET 12 of 12
		DESIGNED BY SEO	DATE JUN 02
SUBJECT: ABUTMENT DESIGN		CHECKED BY DPR	DATE 6/02

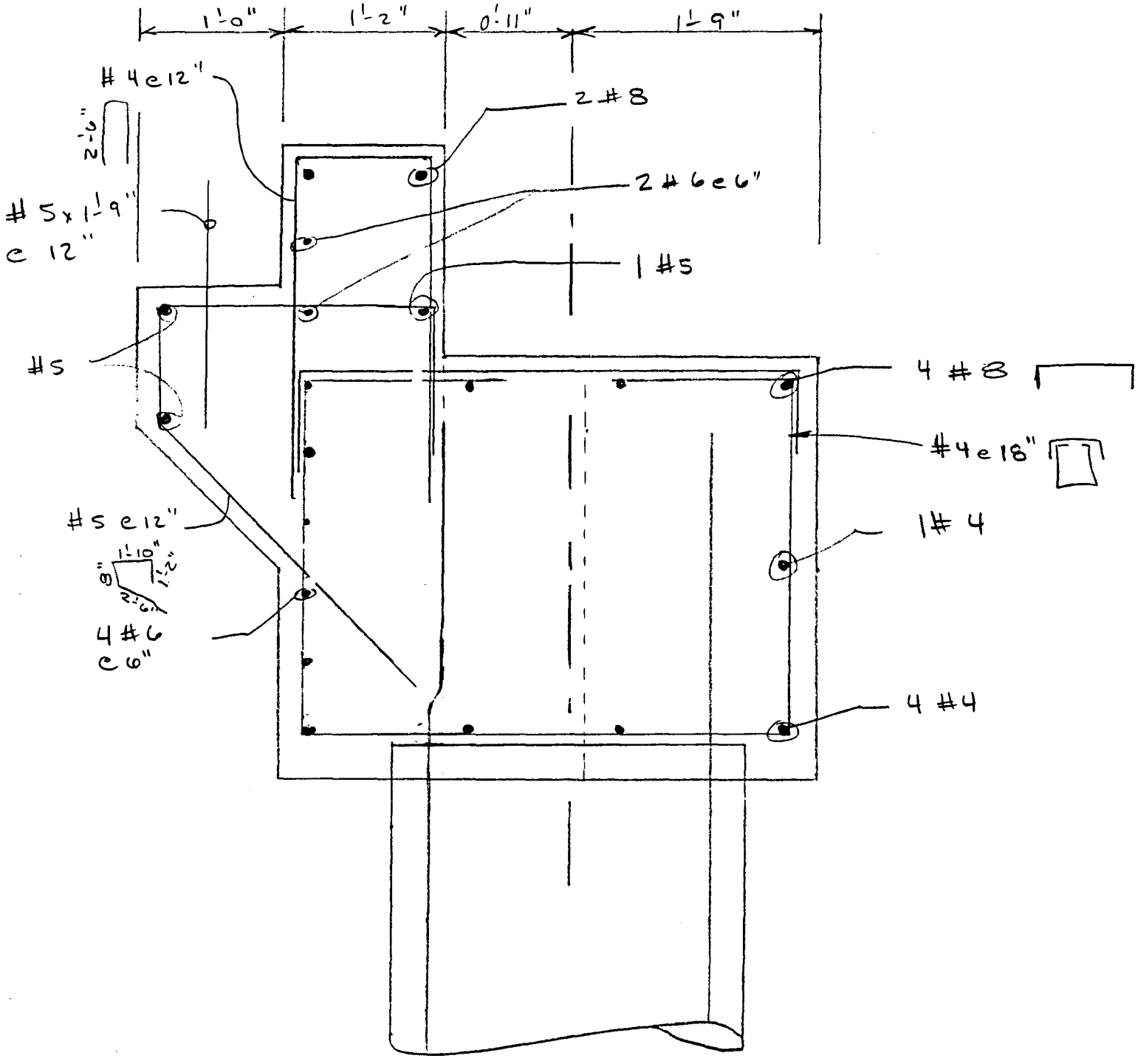

DMJM HARRIS	PROJECT: BHOC 83RD AVE PED BRIDGE	JOB NO. 6888	SHEET 1 of 6
		DESIGNED BY SEO	DATE JUN 02
SUBJECT: WINGWALL DESIGN		CHECKED BY RPC	DATE 6/02

ANALYSIS.

ASD, $f'_c = 4000$ psi $n = 8$ $f_c = 1600$ psi $f_s = 24000$ psi

$E = 3{,}604{,}997$ psi

DESIGN LENGTH = 18'-0"

DESIGN HEIGTH = 3'-9" Avg.

DESIGN LOADS:

ACTIVE PRESSURE = 35 pcf

ADD 2 FT OF EARTH SURCHARGE TO ACCOUNT FOR POSSIBLE LIVE LOAD SURCHARGE PRESSURE.

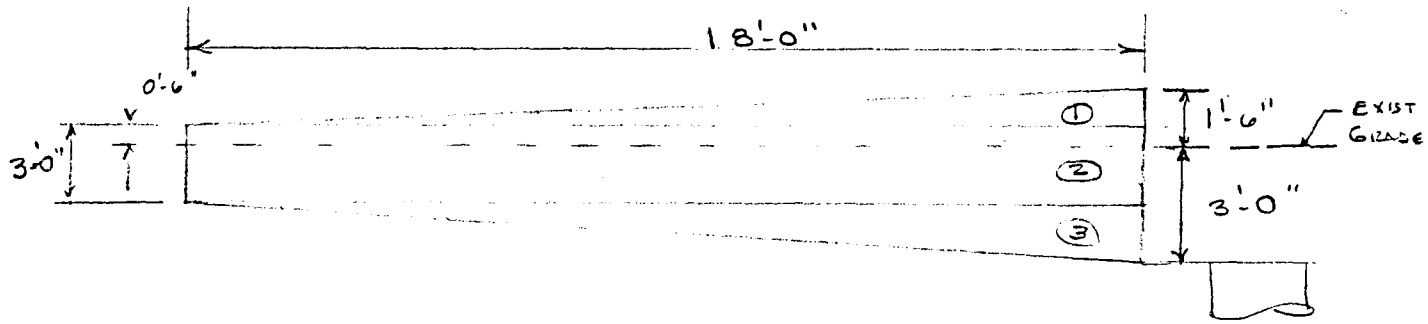

STAAD PRO RESULTS:

$V_y = 11.88$ K ✓ $V_z = 9.18$ K. ✓

$M_y = 82.62$ K-ft

$M_z = 106.92$ K-ft ✓

THE MOMENTS AND SHEARS WILL NOT BE REDUCED FOR THE USE OF FILLETS AS ALLOWED BY AASHTO (CONSERVATIVE).

DMJM HARRIS	PROJECT: BHOC 83RD AVE PED BRIDGE	JOB NO. 6888	SHEET 2 of 6
		DESIGNED BY SEO	DATE JUN 02
SUBJECT: WINGWALL DESIGN		CHECKED BY DPR	DATE 6/02

SHEAR, V_y

$V_y = 11.88$ K

$$v_y = \frac{(11.88^K)(1000)}{(52")(1'\text{-}2")(12")} = 16.32 \text{ psi}$$

$d = (4'\text{-}6")(12") - 2" = 52"$

$$\left(\tfrac{1}{2}\right)(V_c) = \left(\tfrac{1}{2}\right)(0.95)(4000)^{1/2} = 30.04 \text{ psi} > 16.32 \text{ psi} \quad \text{OK.}$$

$\therefore$ No Min Shear Reinf is Required

BENDING, M_y

$M_{E+LL} = 82.62$ K-ft

$M/ft = 82.62^{K\text{-}ft}/4'\text{-}6" = 18.36$ K-ft

Try # 6 @ 6": , $A_s = 0.88 \text{ in}^2$

$$\rho = \frac{0.88 \text{ in}^2}{(12")(11.50")} = 0.006 \Rightarrow K = 0.265 \quad J = 0.911$$

$d = 14" - 2" - (1/2)(0.75") \approx 11.5"$

$$f_s = \frac{(18.36 \text{ K-ft})(12")}{(0.911)(0.88 \text{ in}^2)(11.50")} = 23.90 \text{ ksi} < 24.0 \text{ ksi} \quad \text{OK.}$$

$$f_c = \frac{(2)(18.36 \text{ K-ft})(12")}{(0.265)(0.911)(12")(11.50")^2} = 1.15 \text{ ksi} < 1.6 \text{ ksi} \quad \text{OK.}$$

CHECK MIN REINFORCING:

$\phi M_n > 1.2 M_{cr}$

$$(1.2)(M_{cr}) = (1.2)(7.5)(4000)^{1/2}(12")(14")^2(1/6)(1/12000) = 18.59 \text{ K-ft/ft}$$

$$\phi M_n = (0.9)(0.88 \text{ in}^2)(60.0 \text{ ksi})(11.50" - (1/2)(1.29")) (1/12)$$

$$a = \frac{(0.88 \text{ in}^2)(60.0 \text{ ksi})}{(0.85)(4.0 \text{ ksi})(12")} = 1.29"$$

$\phi M_n = 42.98$ K-ft > 18.59 K-ft OK.

Development Length, $l_d = 18"$

$\leq$ 1.. 1. +1 $(10.)(1.7) = 30.6"$ SAY 2'-8" For #6

DMJM HARRIS	PROJECT: BHOC 83RD AVE PED BRIDGE	JOB NO. 6888	SHEET 3 of 6
		DESIGNED BY SEO	DATE JUN 02
SUBJECT: WINGWALL DESIGN		CHECKED BY DPL	DATE 6/02

SHEAR, V_z

$V = 9.18^K$

$$v = \frac{(9.18^K)(1000)}{(4'\text{-}6')(12'')(11.50'')} = 14.78 \text{ psi} < 30.04 \text{ psi} \quad \text{OK.}$$

$$d = 14'' - 2'' - (1/2)(0.75'') \approx 11.50''$$

No Min Shear Reinf. is required.

BENDING, M_z

$M_z = 106.92^{K\text{-}ft}$

TRY $A_s = 1.08 \text{ in}^2$

$$\rho = \frac{1.08 \text{ in}^2}{(14'')(52'')} = 0.0015, \Rightarrow K = 0.143 \quad J = 0.952$$

$$f_s = \frac{(106.92^{K\text{-}ft})(12'')}{(0.952)(1.08'')(52'')} = 23.99 \text{ Ksi} \approx 24.0 \text{ Ksi} \quad \text{OK.}$$

$$f_c = \frac{(2)(106.92^{K\text{-}ft})(12'')}{(0.143)(0.952)(14'')(52'')^2} = 0.50 \text{ Ksi} < 1.6 \text{ Ksi} \quad \text{OK}$$

PROVIDE 2 #7, $A_s = 1.20 \text{ in}^2$

MIN REINF. - SEE ABUTMENT CAP CALCULATIONS, OK

SPLICE LENGTH: $(22.8'')(1.4)(0.8)\left(\frac{1.08}{1.20}\right)(1.7) = 39''$ SAY $3'\text{-}4''$

DMJM HARRIS	PROJECT: BHOC 83RD AVE PED BRIDGE	JOB NO. 6888	SHEET 4 of 6
		DESIGNED BY SEO	DATE JUN 02
SUBJECT: WINGWALL DESIGN		CHECKED BY DPC	DATE 6/02

CHECK DEFLECTION (ASSUMES BACKFILL FROM ROAD SIDE ONLY)

ASSUME UNIFORM LOAD FOR GENERATION OF MOMENT

$$W_{equiv} = \frac{(2)(M)}{\ell^2} = \frac{(2)(82.62\ K\text{-}ft)}{(4.5')(18.0\ ft)^2} = 0.11\ K/ft = 9.44\ \#/in$$

$$\Delta_{max} = \frac{(W)(\ell)^4}{(8)(E)(I_e)}$$

$$I_e = \left(\frac{M_{cr}}{M_{max}}\right)^3 I_g + \left[1 - \left(\frac{M_{cr}}{M_{max}}\right)^3\right] I_{cr}$$

$M_{cr} = (18.59\ K\text{-}ft)(1/1.2) = 15.49\ K\text{-}ft$

$M_{max} = 18.36\ K\text{-}ft$

$I_g = (12")(14")^3(1/12) = 2744\ in^4$

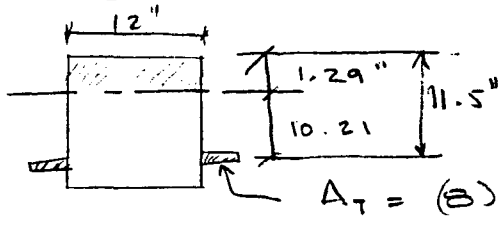

$A_T = (8)(0.88\ in^2) = 7.04\ in^2$

$I_{cr} = \left(\frac{1}{3}\right)(12")(1.29")^3 + 7.04\ in^2(11.5" - 1.29")^2$

$= 743.0\ in^4$

$$\therefore I_e = \left(\frac{15.49\ K\text{-}ft}{18.36\ K\text{-}ft}\right)^3 (2744\ in^4) + \left[1 - \left(\frac{15.49\ Kft}{18.36\ Kft}\right)^3\right](743.0\ in^4)$$

$I_e = 1945.0\ in^4$

$$\Delta_{max} = \frac{(9.44\ \#/in)(18\ ft \times 12")^4}{(8)(3604997\ psi)(1945.0\ in^4)} = 0.37"$$

THIS MAX DEFLECTION WILL BE REDUCED CONSIDERABLY IF WINGWALL IS BACKFILLED SIMULTANEOUSLY ON BOTH SIDES.

OK.

DMJM HARRIS	PROJECT: BHOC 83RD AVE PED. BRIDGE	JOB NO. 6888	SHEET 5 of 6
		DESIGNED BY SED	DATE JUN 02
SUBJECT: WINGWALL DESIGN		CHECKED BY DPC	DATE 6/02

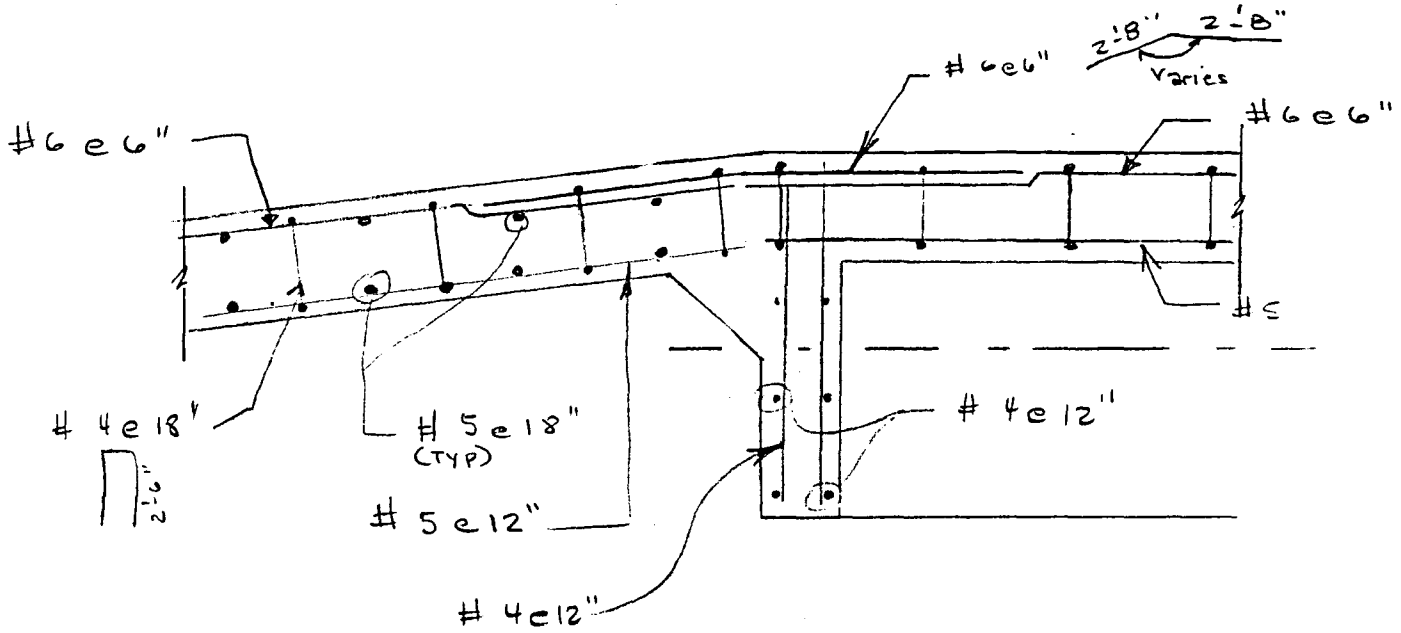

SECTION D-D

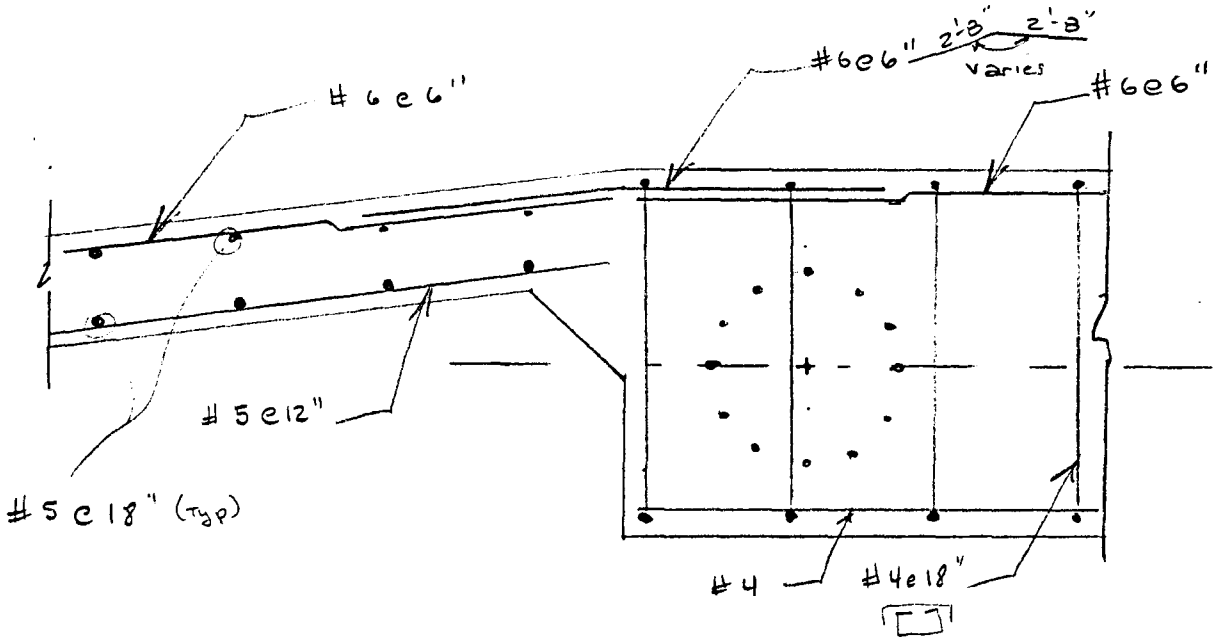

SECTION E-E

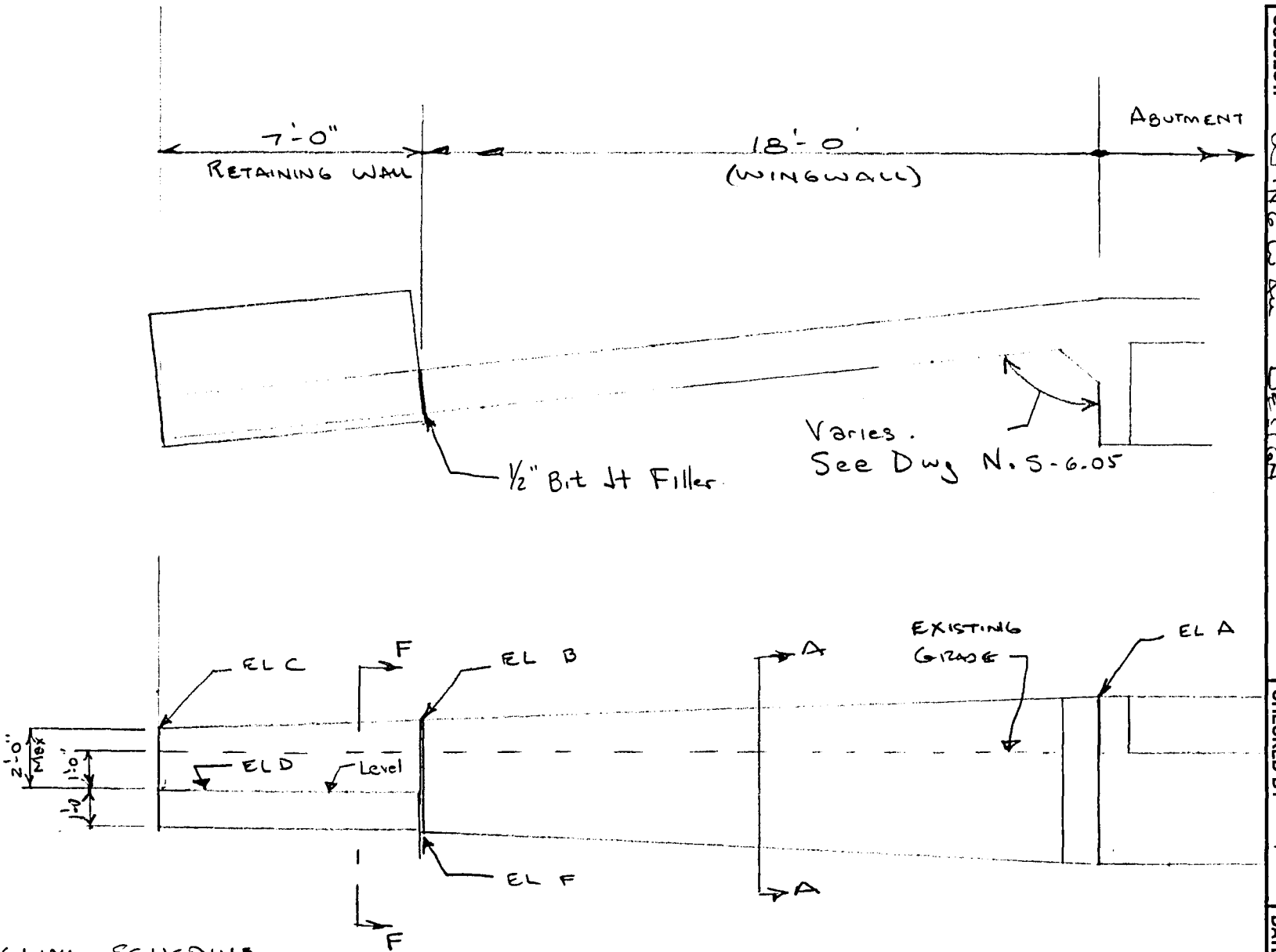

WINGWALL SCHEDULE

LOCATION		EL A	EL B	EL C	EL D	EL F
ABUT 1	EAST	1089.86	1089.14	1088.86	1087.42	1086.14
	WEST	1089.86	1089.14	1088.86	1087.33	1086.14
ABUT 2	EAST	1089.00	1088.28	1088.00	1086.68	1085.28
	WEST	1089.00	1088.28	1088.00	1086.82	1085.28

DMJM HARRIS

PROJECT: BHOC
B3RD AVE PED BRIDGE

SUBJECT: WINGWALL DESIGN

JOB NO. 6888

SHEET 6 of 6

DESIGNED BY SEO

DATE 6/02

CHECKED BY DPC

DATE 6/02

DMJM HARRIS	PROJECT: BHOC 83RD AVE PED BRIDGE	JOB NO. 6888	SHEET 1 of 11
		DESIGNED BY SEO	DATE JUN 02
SUBJECT: RETAINING WALL DESIGN		CHECKED BY DPC	DATE 6/02

ANALYSIS

ASD , $f'_c = 3000$ psi , $E = 3,122,019$ psi , $n = 9$

$f_c = 1200$ psi $\quad f_s = 24000$ psi

DESIGN HEIGHT = 2.0 ft.

DESIGN LOADS

AT REST PRESSURE = 55 psf.

PASSIVE PRESSURE = 300 psf.

$\mu = 0.40$

2 ft SURCHARGE LOAD OR 16 K POINT LOAD.

DMJM HARRIS	PROJECT: BHOC 83RD AVE PED BRIDGE	JOB NO. 6888	SHEET 2 of 11
		DESIGNED BY SEO	DATE JUN 02
SUBJECT: RETAINING WALL DESIGN.		CHECKED BY DPC	DATE 6/02

EXTERNAL STABILITY

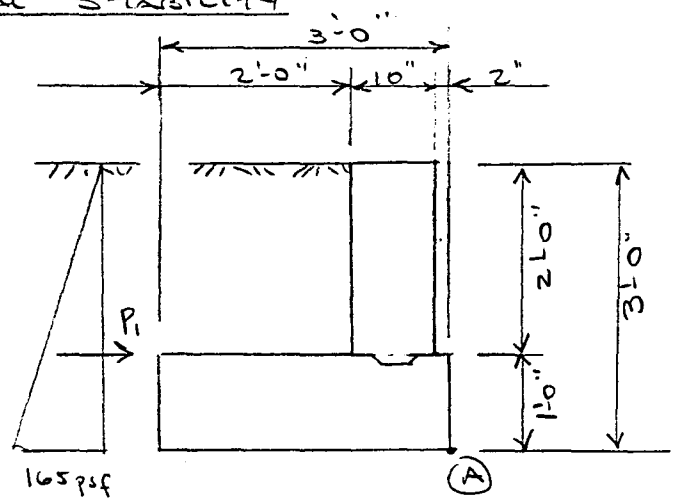

$(\gamma)(K_o) = 55$ psf

$(\gamma)(K_p) = 300$ psf

$\gamma_{backfill} = 120$ pcf

$\mu = 0.40$

Allowable Brg Pressure = 1500 psf

CASE I : BACKFILL ONLY

CHECK OVERTURNING:

SOURCE	F_x (#)	F_y (#)	ARM TO (A) (ft)	$M_{DRIVING}$ (#-ft)	$M_{RESISTING}$ (#-ft)
P_1	248 #		1.0	248.0	
SOIL		480	2.0		960.0
FT_g		450	1.5		675.0
WALL		250	0.58		146.0
	248	1180		248.0	1781.0

$$FS_{OT} = \frac{1781.0}{248.0} = 7.18 > 2.0 \text{ OK}$$

CHECK SLIDING

DRIVING FORCES = 248 #

RESISTING FORCES = (1180#)(0.4) = 472.0 #

$$FS_{SLIDING} = \frac{472.0}{248\ \#} = 1.90 > 1.5 \text{ OK.}$$

LOCATION OF RESULTANT = (1781.0)(1/1180) = 1.5' from A. OK.

[illegible] = 202 psf < 1500 psf OK

DMJM HARRIS	PROJECT: BHOC 83RD AVE PED BRIDGE	JOB NO. 6888	SHEET 3 of 11
		DESIGNED BY SED	DATE JUN 02
SUBJECT: RETAINING WALL DESIGN		CHECKED BY DRC	DATE 6/02

CASE II: BACKFILL + POINT LOAD (16000 #)

THE POINT LOAD WILL INDUCE LATERAL EARTH PRESSURES, AND A VERTICAL LOAD ON THE FOOTING. THESE LOADS WILL BE DISTRIBUTED AT AN ASSUMED DISTANCE OF 3 ft (BOTH WAYS)

$m = \frac{2'0''}{3'0''} = 0.67$ $\quad P_q = \frac{(1.77)(P)(m)^2(n)^2}{(H)^2(m^2+n^2)^3}$

m	n	P_q
0.67	0.17	374
0.67	0.33	886
0.67	0.66	889
0.67	1.00	464

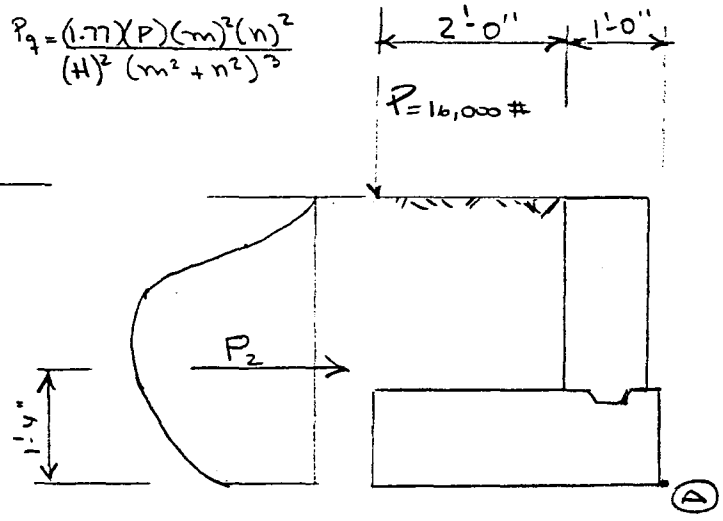

$P_2 = (1350\ \# + 750\ \#)(1/3\ ft) = 700\ \#/ft$ (EQUATES TO 5 FT OF SURCHARGE LOAD)

VERTICAL PRESSURE ON FTG: $(16{,}000\ \#)(1/9\ SF) = 1778\ psf$

$\therefore\ (1778\ psf)(2\ ft) = 3656\ \#/ft$

CHECK OVERTURNING

SOURCE	F_x (#)	F_y (#)	ARM TO (A) (ft)	M DRIVING (#-ft)	M RESISTING (#-ft)
P_1	248 #		1.0	248.0	
P_2	700 #		1.33	933.0	
SOIL		480	2.0		960.0
FTG		450	1.5		675.0
WALL		250	0.58		146.0
LL LOAD ON FTG		3656 #	2.0		7312.0
	948	4836		1181.0	9093

$FS_{OT} = \frac{9093}{1181.0} = 7.7 > 2.0$ OK

DMJM HARRIS	PROJECT: BHOC 33RD AVE PED BRIDGE	JOB NO. 6888	SHEET 4 of 11
		DESIGNED BY SEO	DATE JUN 02
SUBJECT: RETAINING WALL DESIGN		CHECKED BY DPC	DATE 6/02

CHECK SLIDING

$F_{DRIVING} = 948\ \#$

$F_{RESISTING} = (4836)(0.4) = 1934\ \#$

$FS_{sliding} = \frac{1934\ \#}{948\ \#} = 2.0 > 1.5$ OK.

LATERAL WALL PRESSURES DUE TO LINE LOADS AND POINT LOADS

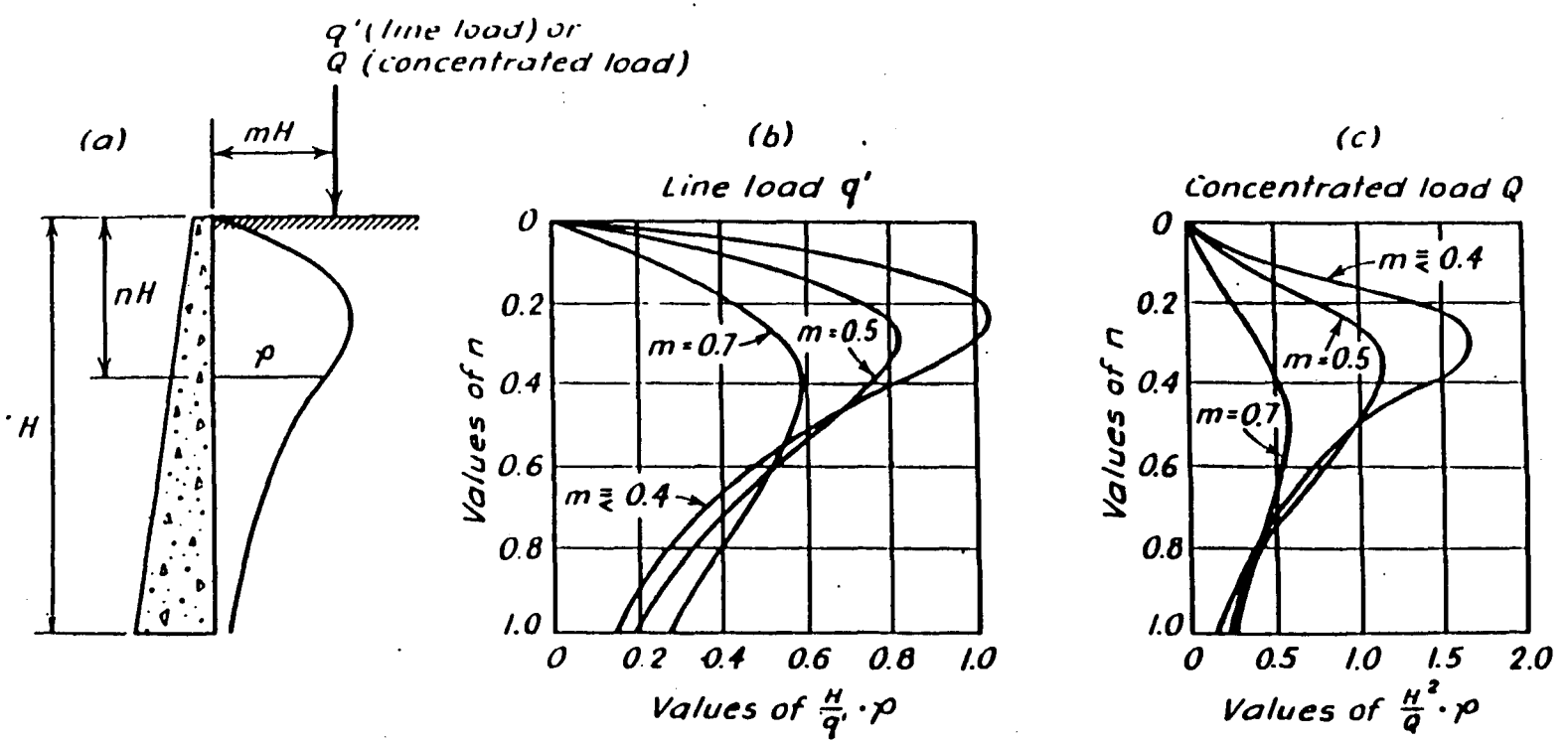

AT-REST SOIL PRESSURE

The active and passive pressures predicted by the Rankine and Coulomb theories assume the wall moves slightly. Lateral movement as little as $H/200$ is sufficient for the active/passive distributions to develop. In some situations, however, the soil is completely confined and cannot move. This "at rest" case is appropriate for soil next to bridge abutments, basement walls restrained at their tops, walls bearing on rock, and walls with soft-clay backfill, as well as for sand deposits of infinite depth and extent.

The horizontal pressure at rest depends on the *coefficient of earth pressure at rest*, k_o, which varies from 0.4 to 0.5 for untamped sand, from 0.5 to 0.7 for normally consolidated clays, and from 1.0 and up for overconsolidated clays.

$$p_o = k_o p_v \qquad 37.20$$

$$k_o \approx 1 - \sin\phi \qquad 37.21$$

$$R_o = \tfrac{1}{2} k_o \rho g H^2 \quad \text{[SI]} \qquad 37.22(a)$$

$$R_o = \tfrac{1}{2} k_o \gamma H^2 \quad \text{[U.S.]} \qquad 37.22(b)$$

Table 37.2 Typical Range of Earth Pressure Coefficients

condition	granular soil	cohesive soil
active	0.33–0.22	1–0.5
passive	3–14	1–2
at rest	0.4–0.6	0.4–0.8

8. GRAPHICAL SOLUTIONS

Appendix 37.A provides a convenient graphical method of evaluating the horizontal and vertical earth pressures for various soil types. Since average values of soil density have been incorporated, K_h and K_v have units of lbf/ft^3 (lbf/ft^2 per lineal foot of wall). H is defined as shown: the height of the soil directly above the heel.

$$R_{a,h} = \tfrac{1}{2} K_h H^2 \qquad 37.23$$

$$R_{a,v} = \tfrac{1}{2} K_v H^2 \qquad 37.24$$

$$R_a = \sqrt{R_{a,h}^2 + R_{a,v}^2} \qquad 37.25$$

$$\theta = \arctan\left(\frac{R_v}{R_h}\right) \qquad 37.26$$

Most complications involving irregular and stratified backfill, irregular surcharges, and sloping water tables require more complex calculations. However, App. 37.B provides a way of evaluating retaining walls with *broken slope backfill*.

9. SURCHARGE LOADING

A surcharge is an additional force applied at the exposed upper surface of the restrained soil. A surcharge can result from a uniform load, point load, line load, or strip load. (Line and strip loads are parallel to the wall.)

With a *uniform load surcharge* of q (in lbf/ft^2 (N/m^2)) at the surface, there will be an additional active force, R_q. R_q acts horizontally at $H/2$ above the base. This surcharge resultant is in addition to the backfill active force that acts at $H/3$ above the base.

$$p_q = k_a q \qquad 37.27$$

$$R_q = k_a q H \times \text{(wall width)} \qquad 37.28$$

If a vertical *point load surcharge* (e.g., a truck wheel), V_q, in pounds (newtons) is applied a distance x back from the wall face, the approximate distribution of pressure behind the wall can be found from Eq. 37.29 or 37.30. These equations assume elastic soil performance and a Poisson's ratio of 0.5. The coefficients have been adjusted to bring the theoretical results into agreement with observed values.

$$p_q = \frac{1.77 V_q m^2 n^2}{H^2 (m^2 + n^2)^3} \quad [m > 0.4] \qquad 37.29$$

$$p_q = \frac{0.28 V_q n^2}{H^2 (0.16 + n^2)^3} \quad [m \le 0.4] \qquad 37.30$$

$$R_q \approx \frac{0.78 V_q}{H} \quad [m = 0.4] \qquad 37.31$$

$$R_q \approx \frac{0.60 V_q}{H} \quad [m = 0.5] \qquad 37.32$$

$$R_q \approx \frac{0.46 V_q}{H} \quad [m = 0.6] \qquad 37.33$$

$$m = \frac{x}{H} \qquad 37.34$$

$$n = \frac{y}{H} \qquad 37.35$$

For a *line load surcharge*, L_q (in lbf/ft (N/m)), the distribution of pressure behind the wall is given by Eqs. 37.36 and 37.38.

$$p_q = \frac{4 L_q m^2 n}{\pi H (m^2 + n^2)^2} \quad [m > 0.4] \qquad 37.36$$

$$R_q = \frac{0.64 L_q}{m^2 + 1} \qquad 37.37$$

$$p_q = \frac{0.203 L_q n}{H (0.16 + n^2)^2} \quad [m \le 0.4] \qquad 37.38$$

$$R_q = 0.55 L_q \qquad 37.39$$

Sidewalks, railways, and roadways parallel to the retaining wall are examples of *strip surcharges*. The effect of a strip surcharge, S_q (in lbf/ft^2 (N/m^2)), is covered in most soils textbooks.

Geotechnical

DMJM HARRIS	PROJECT: BHOC 83RD AVE PED BRIDGE	JOB NO. 6888	SHEET 7 of 11
		DESIGNED BY SEO	DATE JUN 02
SUBJECT: RETAINING WALL DESIGN		CHECKED BY DR	DATE 6/02

CASE II: POINT LOAD AT 1'-0" AWAY FROM BACK FACE OF WALL. P = 16,000 #

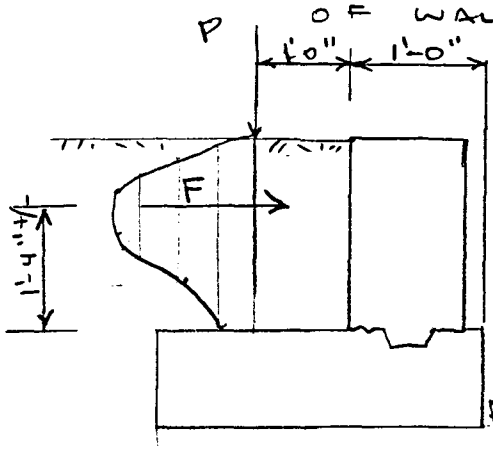

m	n	q_p (psf)
0.50	0.25	3625
0.50	0.50	3540
0.50	0.75	1856
0.50	1.00	906

F = Resultant Force = 2000 + 1400 + 800 + 600 = 4800

P_z = (4800 #)(1/3 ft) = 1600 #/ft
(EQUATES TO 7.6 ft OF SURCHARGE LOAD)

CHECK SHEAR:

$$V = \frac{F}{(b)(d)} = \frac{1600}{(12")(7.69")} = 17.4 \text{ psi}$$

$$d = 10" - 2" - (1/2)(0.625) = 7.69"$$

$$V_c = (0.95)(\sqrt{f'_c}) = 52.03 \text{ psi}$$

$V < (\frac{1}{2})(V_c)$ ∴ NO MIN SHEAR REINF IS REQUIRED

CHECK SLIDING FRICTION:

$$A_{vf} = \frac{V}{(f_s)(\mu)} = \frac{1600 \text{ \#/ft}}{(24000 \text{ psi})(0.6)} = 0.11 \text{ in}^2/\text{ft}$$

FLEXURAL DESIGN

$M = (1600\ \#/ft)(1'4") = 2133\ \#\text{-}ft$

TRY $A_s = 0.16\ in^2/ft.$

$\rho = \frac{0.16}{(12")(7.69")} = 0.0017$, $K = 0.1586$, $J = 0.947$

$f_s = \frac{(2133\ \#\text{-}ft)(12")}{(0.16\ in^2)(0.947)(7.69")} = 21{,}967\ psi < 24000\ psi$ OK

$f_c = \frac{(2)(2133\ \#\text{-}ft)(12")}{(0.947)(0.159)(12")(7.69")^2} = 479\ psi < 1600\ psi$ OK

CHECK MIN REINFORCING:

$\phi M_n > 1.2 M_{cr}$

$\phi M_n = (0.9)\left[(0.16\ in^2)(60{,}000\ psi)(7.69")\left(1 - (0.6)(0.0017)\frac{(60.0)}{3.0}\right)\right](1/1$

$= 5424\ \#\text{-}ft$

$1.2 M_{cr} = (1.2)(7.5)(3000)^{1/2}(12")(10")^2(1/6)(1/12") = 8216\ \#\text{-}ft$

$\phi M_n < 1.2 M_{cr}$

$\therefore$ INCREASE A_s BY $(1/3)$, $A_s = (1.33)(0.16\ in^2/ft) = 0.21\ in^2$

A_s FOR SLIDING FRICTION + FLEXURAL $= 0.11\ in^2/ft + 0.21\ in^2/ft$

$A_s = 0.33\ in^2/ft.$

SAY # 5 @ 12", $A_s = 0.31\ in^2/ft$

PLUS ADD 2x4 CONT. KEYWAY.

DEVELOPMENT LENGTH OF #5 @12":

$$l_{hb} = (1200)(0.625")(1/(3000)^{1/2}) = 13.69"$$

$$(l_{hb})(0.7) = (13.69")(0.7) = 9.6" \text{ MIN} \quad \text{SAY } 10"$$

TEMPERATURE AND SHRINKAGE

USE # 4 @ 18" BOTH FACES and for outside face Vertical.

EMBED OUTSIDE FACE VERTICAL INTO FOOTING TO ADD FIXITY.

FOOTING HEEL EXTENSION (CASE II GOVERNS)

$$F_{Y_{wheel}} = (1778 \text{ psf})(2'-0") = 3556 \text{ \#/ft} \quad (\text{wheel load})$$

$$F_{Y_{soil}} = (2.0')(2'-0")(120 \text{ pcf}) = 480 \text{ \#/ft}$$

$$F_{ftg} = (1.0')(2'-0")(150 \text{ pcf}) = 300 \text{ \#/ft}$$

$$M = (3556\#)(1'-0") + (480\#)(1'-0") + (300\#)(1'-0") = 4336 \text{ \#-ft}$$

TRY $A_s = 0.26 \text{ in}^2/\text{ft}$

$$\rho = \frac{0.26 \text{ in}^2}{(12")(9.75")} = 0.0022 \quad , \quad K = 0.18 \quad , \quad J = 0.935$$

$$d = 12" - 2" - (1/2)(0.5") = 9.75"$$

$f_s = 21,843$ psi OK, $f_c = 536.$ OK

$$\phi M_n = (0.9)(60{,}000 \text{ psi})(0.26)(9.75") \left[1 - (0.6)(0.0022)\frac{(60)}{3.0}\right](1/12)$$

$$= 11377 \text{ \#-ft.}$$

$$1.2 M_{cr} = (1.2)(7.5)(3000)^{1/2}(12")(12")^2(1/6)(1/12) = 11031 \text{ \#-ft}$$

$$A_{s\,min} = \text{[illegible]} \quad A_{s\,req} = (0.26)(1.33) = 0.35 \text{ in}^2/\text{ft}$$

DMJM HARRIS	PROJECT: BHOC 83RD AVE PED BRIDGE	JOB NO. 6888	SHEET 10 of 11
		DESIGNED BY SED	DATE JUN 02
SUBJECT: RETAINING WALL DESIGN		CHECKED BY DPC	DATE 6/02

LONGITUDINAL REINFORCING ON FOOTING

$A_s = (0.002)(1'\text{-}0")(1'\text{-}0")(144\ in^2/ft) = 0.29\ in^2/ft$

SAY #5 @ 12"

DMJM HARRIS	PROJECT: BHOC 83RD AVE PED BRIDGE	JOB NO. 6888	SHEET 11 of 11
		DESIGNED BY SKD	DATE JUN 02
SUBJECT: RETAINING WALL DESIGN		CHECKED BY DPC	DATE 6/02

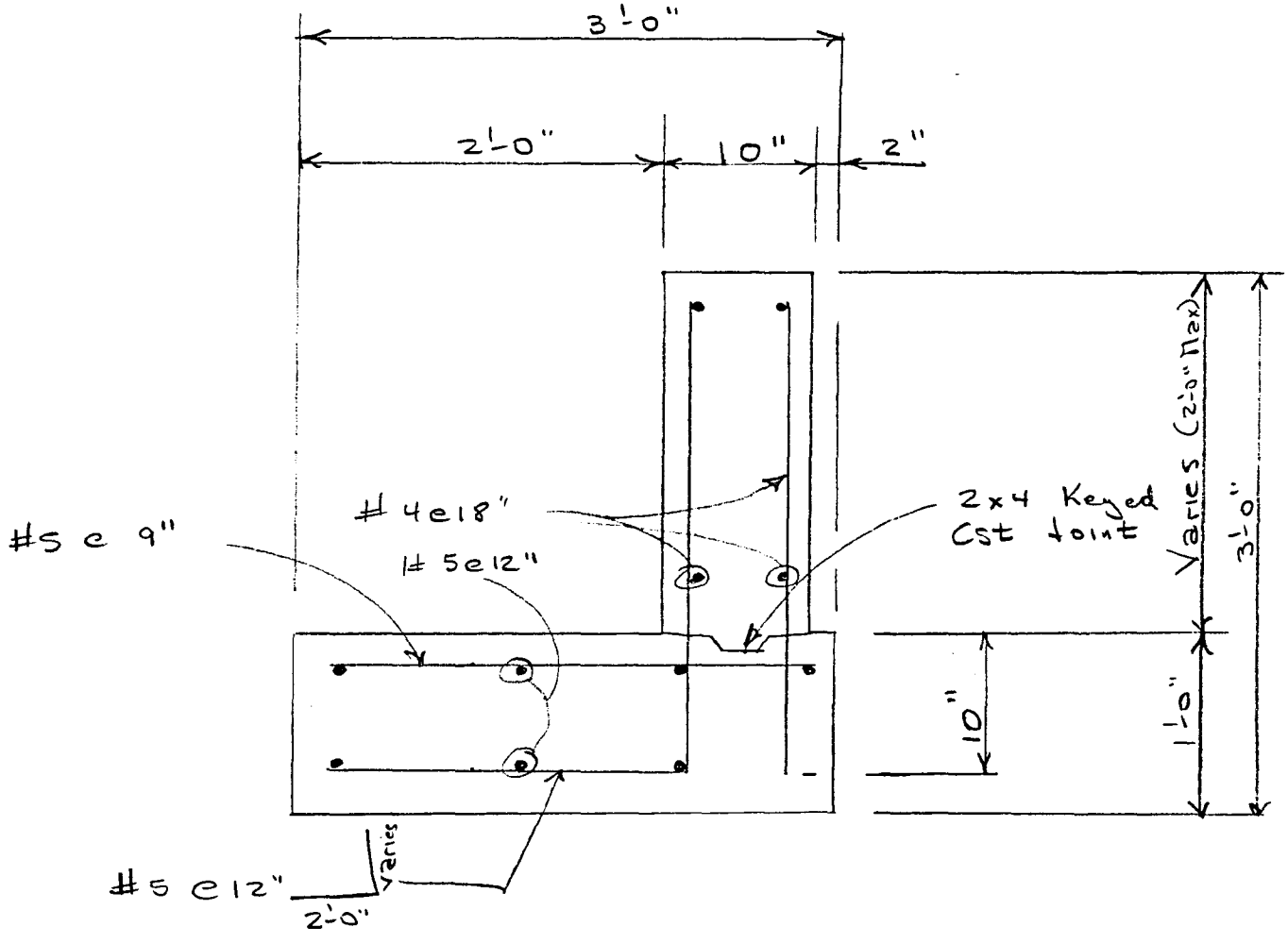

DMJM HARRIS	PROJECT: BHOC 33RD AVE PED BRIDGE	JOB NO. 6888	SHEET 1 of 4
		DESIGNED BY SEO	DATE JUN 02
SUBJECT: DRILLED SHAFT DESIGN		CHECKED BY DPL	DATE 6/02

DRILLED SHAFT DIAMETER = 30"

AREA = $\pi(30")^2/4$ = 706.9 in²

MIN AREA OF STL = 7.07 in², MAX AREA OF STL = 5.66 in²

LFD

F_Y = 60,000 psi

f'_c = 4000 psi

E = 3,604,997

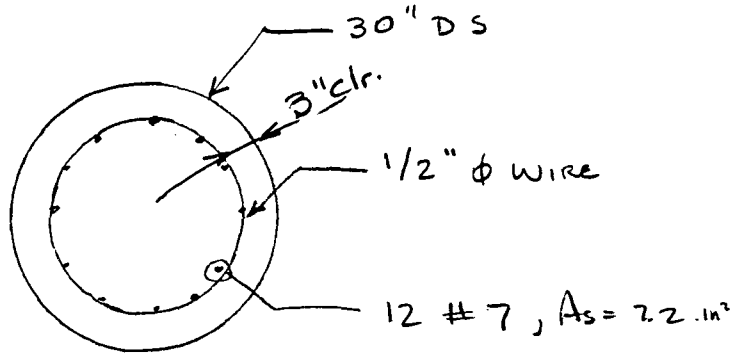

CIRCUMFERENCE OF LONG. BARS = $\pi(30" - (2)(3") - (2)(1/2") - 0.875")$ 69"

NUMBER OF BARS IN OUTER LOOP = 12 EA

CLEAR SPACING = 5.75" − 0.875 = 4.89"

OUTER LOOP RADIUS = $(1/2)(30" - (2)(3") - (2)(1/2") - 0.875") = 11.00"$

NUMBER OF DS IN BENT = 2 EA

D.S. LENGTH = 35 ft (10 ft to MAX MOMENT)

DISTRIBUTION FACTORS : 0.99 TOP & 0.0 BOTTOM BOTH DIRECTION

DUCTILITY FACTOR = 5.0

CENTER OF GRAVITY TO SUPERSTRUCTURE = 2.25 ft

LOADS AND CROSS SECTIONS AT TOP OF DS

DEVELOPMENT LENGTH:

$l_d = (0.04)(0.60\ in^2)(60{,}000)(1/\sqrt{4000}) = 22.8$ in

$(l_d)(1.4) = 32"$

NOTE: 30" MAX l_d IS available. SO 30" OK (A_s required / A_s provided)

DMJM HARRIS	PROJECT: BHOC 83RD AVE PED BRIDGE	JOB NO. 6888	SHEET 2 of 4
		DESIGNED BY SEO	DATE JUN 02
SUBJECT: DRILLED SHAFT DESIGN		CHECKED BY DPC	DATE 6/02

LATERAL REINFORCEMENT

$V_y = 14.40$ Kips

$$v = \frac{(14.40\text{ Kips})(1000)}{(30'')(30'' - 3'' - 1/2'' - (.5)(0.875))} = 18.42 \text{ psi}$$

$v_c = (0.95)(4000)^{1/2} = 60$ psi

$v < (0.5)v_c)$ ∴ No Reinf is Required. However, Provide $A_{s\,min.}$

$$A_v = \frac{(50)(b_w)(s)}{f_y} = \frac{(50)(30)(12'')}{60{,}000} = 0.30 \text{ in}^2/\text{ft}$$

1/2" Dia Spiral:

$$\rho_s \geq (0.45)\left(\frac{A_g}{A_c} - 1\right)\left(\frac{f'_c}{f_y}\right)$$

where A_c = Area of core measured to the outside diameter of the spiral.

$A_c = \pi(30'' - (2)(3''))^2/4 = 452.4 \text{ in}^2$

$A_g = \pi(30'')^2/4 = 706.9 \text{ in}^2$

$$\rho_s \geq (0.45)\left(\frac{706.9 \text{ in}^2}{452.4 \text{ in}^2} - 1\right)\left(\frac{4000}{60000}\right) = 0.017$$

$$\rho_s = \frac{\text{Spiral Reinforcement}}{\text{Volume of Core}}$$

TRY 1/2" @ 6", $A_s = 0.80 \text{ in}^2/\text{ft} > 0.30 \text{ in}^2/\text{ft}$ ∴ OK.

$$\rho_s = \frac{(\pi)(23.5'')(0.40 \text{ in}^2)}{(452.4 \text{ in}^2)(6'')} = 0.011 < 0.017 \quad \text{N.G.}$$

However, Provide 1/2" @ 6" since shear reinf is not required by analysis

DMJM HARRIS	PROJECT: BHOC B3RD AVE PED BRIDGE	JOB NO. 6888	SHEET 3 of 4
		DESIGNED BY [illegible]	DATE JUN 02
SUBJECT: DRILLED SHAFT DESIGN		CHECKED BY DPC	DATE 6/02

DESIGN AXIAL LOADS P = 69.32 K

THE LATERAL LOADING WILL CONTROL THE DESIGN LENGTH.

DEPTH REQUIRED FOR LATERAL LOADING = 30 ft

	TOP EL	BOTT EL
ABUT 1	1085.49	1055.49
ABUT 2	1084.71	1054.71

CAPACITY OF 30" DIA SHAFT @ 30 ft = 190.0 K

Figure 2 - Recommended Allowable Downward Capacity of Drilled Shafts - 83rd Avenue Pedestrian Bridge

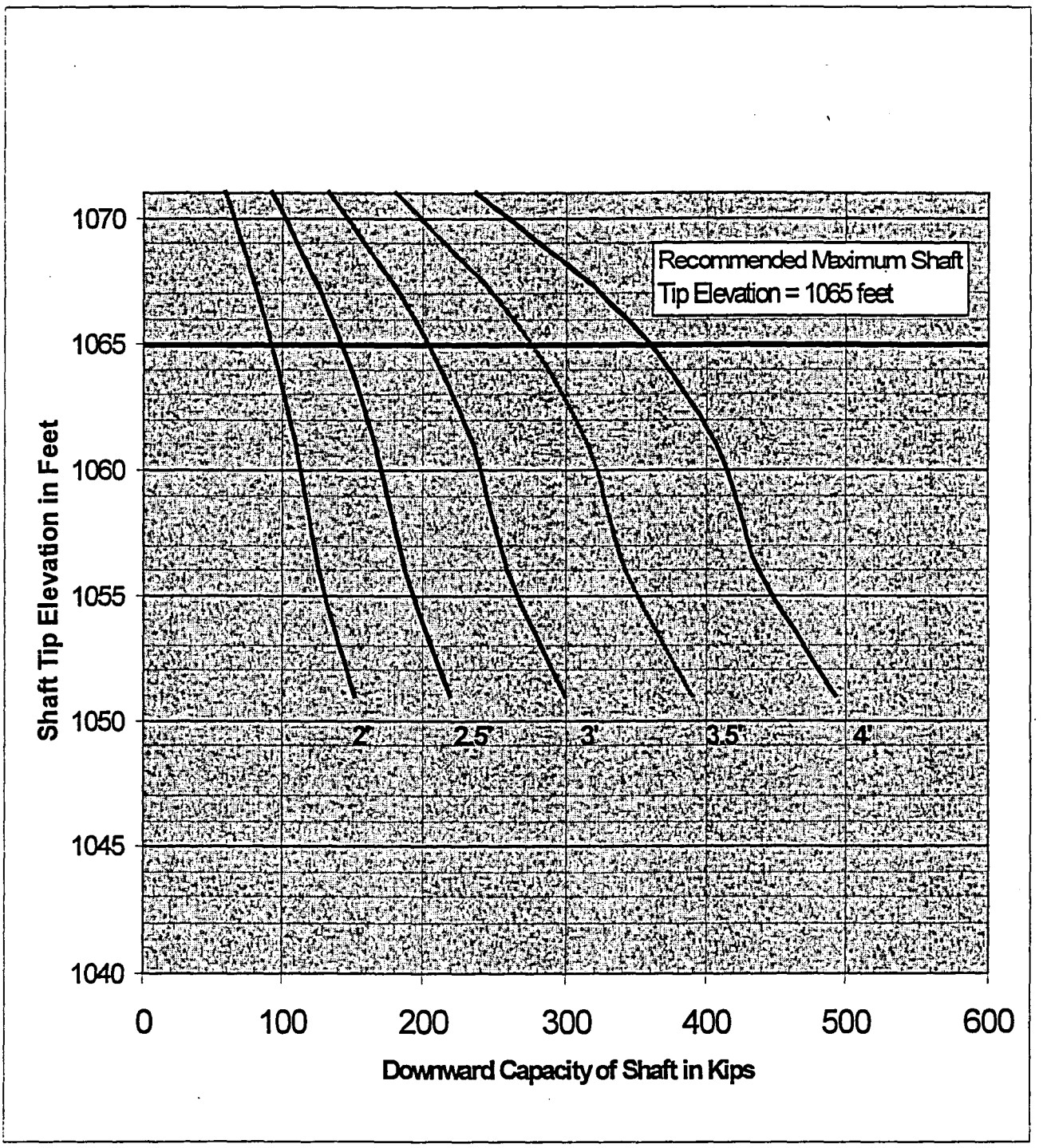

DMJM HARRIS	PROJECT: BHOC 83RD AVE PED BRIDGE	JOB NO. 6888	SHEET 1 of 6
		DESIGNED BY SED	DATE JUN 02
SUBJECT: GEOMETRY		CHECKED BY DPC	DATE 6/02

ABUTMENT GEOMETRY.

TOP OF ABUTMENT TO BE LEVEL WITH THE EXISTING GRADE:

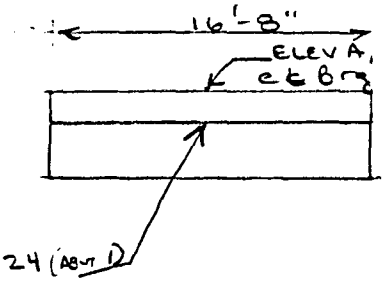

2" BEARING PAD

1" ALLOWANCE FOR BRG PLATES

1'-4" SUPERSTRUCTURE DEPTH

TOTAL = 1'-7"

ELEV A ℄ ℄ Brg ABUT 1 = 1089.82

ELEV A ℄ ℄ Brg ABUT 2 = 1089.04

% GRADE BETWEEN ℄ Brg ABUT 1 & 2 = $\frac{89.82 - 89.04}{46'-3\frac{1}{8}''} = 0.01686$

BEGIN OF BRIDGE ELEVATION = 1089.82 + (0.01686)(2'-1") = 1089.86

END OF BRIDGE ELEVATION = 1089.04 − (0.01686)(2'-1") = 1089.00

WING WALL TO ABUTMENT SKEW WAS MEASURED FROM MICRO STATION. THE ANGLE ALLOWS THE END OF THE WING WALL TO BE 1-foot AWAY FROM THE TOP OF BANK. THE SKEWS VARY DUE TO THE CANAL ALIGNMENT BEING ON A CURVE AT THE BRIDGE LOCATION

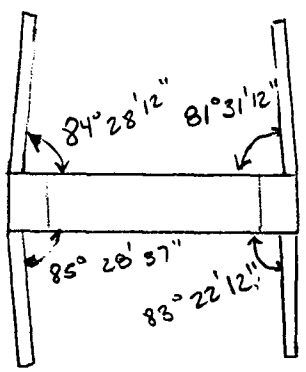

DMJM HARRIS	PROJECT: BHOC 83RD PED BRIDGE	JOB NO. 6887	SHEET 2 of 6
		DESIGNED BY SEO	DATE JUN 02
SUBJECT: WINGWALL ELEVATIONS		CHECKED BY DPC	DATE 6/02

ABUTMENT 1

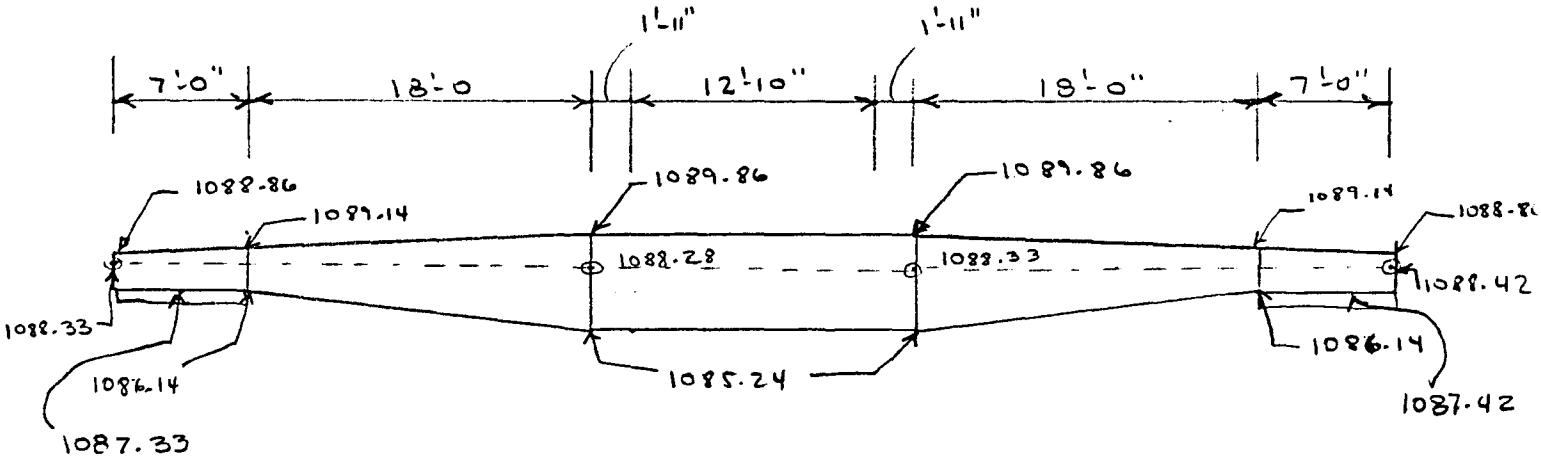

ELEVATION
(LOOKING TOWARDS ABUT 2)

ABUTMENT 2

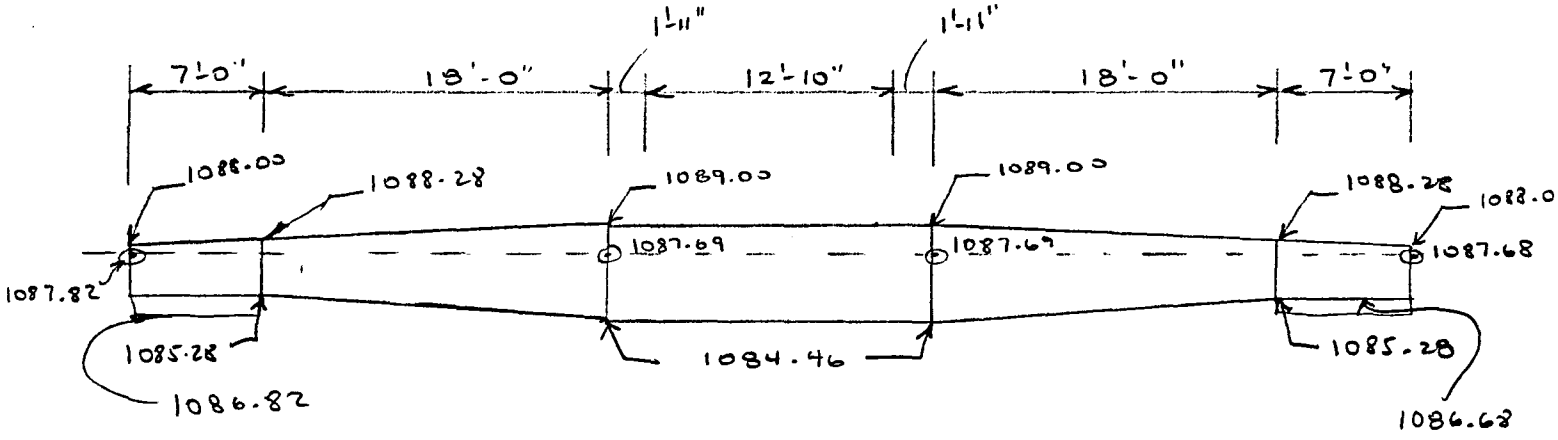

ELEVATION

```
5009,918275.849284,599326.001989,1073.279267,NE Cor Wingwall
5010,918278.077118,599301.127331,1073.084779,NE Cor Abut 2
5011,918274.241365,599301.041100,1073.155511,SE Cor Abut 2
5012,918274.558012,599284.354268,1072.940517,SW Cor Abut 2
5013,918278.386291,599284.354906,1072.959721,NW Cor Abut 2
5014,918277.119588,599259.381537,1072.708900,NW Cor Wingwall
5015,918232.228669,599283.504183,1073.130812,SW Cor Abut 1
5016,918236.069152,599283.610453,1072.548876,NW Cor Abut 1
5017,918234.462652,599258.657159,1073.106092,SW Cor Wingwall
5018,918231.916346,599300.196371,1073.150426,SE Cor Abut 1
5019,918235.752688,599300.299715,1072.939038,NE Cor Abut 1
5020,918233.172949,599325.145254,1073.133292,SE Cor Wingwall
5024,918109.772231,602966.411415,1087.683700,SE Cor Wingwall
5025,918127.465518,602948.789937,1087.693639,SE Cor Abut 2
5026,918124.832723,602946.046993,1087.214864,SW Cor Abut 2
5027,918137.151580,602934.765375,1087.614505,NW Cor Abut 2
5028,918139.735234,602937.599441,1087.693062,NE Cor Abut 2
5029,918156.754521,602919.158480,1087.824207,NE Cor Wingwall
5030,918124.666014,602883.974593,1088.327428,NW Cor Wingwall
5031,918106.578094,602901.240114,1088.284959,NW Cor Abut 1
5032,918109.150239,602904.163183,1087.793887,NE Cor Abut 1
5033,918096.853385,602915.397999,1088.277906,SE Cor Abut 1
5034,918094.269988,602912.493043,1088.327558,SW Cor Abut 1
5035,918077.485240,602931.046329,1088.418856,SW Cor Wingwall
5038,917984.374139,603110.964227,1085.136392,TOE ST
5039,917978.810778,603104.250514,1088.008208,ERD ST
5040,917969.676185,603093.814281,1088.268288,ERD1 ST
5041,917968.688958,603092.888381,1087.791375,CNL ST
5042,917948.405137,603111.543840,1087.665427,CNL
5043,917949.352438,603112.948922,1088.091573,ERD1
5044,917956.421350,603122.418325,1088.689834,ERD
5045,917955.523523,603124.227123,1088.547258,PP
5046,917964.462822,603129.906795,1085.073307,TOE
5047,917944.560517,603148.535248,1085.028908,TOE
5048,917936.830619,603142.779120,1088.628123,ERD
5049,917929.189698,603132.750686,1088.402517,ERD1
5050,917927.622311,603131.310211,1087.809194,CNL
5051,917908.930427,603148.419471,1087.772308,CNL
5052,917910.589342,603150.102360,1088.541032,ERD1
5053,917919.280197,603159.991291,1088.529404,ERD
5054,917924.702207,603166.299837,1085.046770,TOE
5055,917905.024931,603185.728633,1084.948553,TOE
5056,917899.254506,603179.368392,1088.395175,ERD
5057,917889.831504,603168.060706,1088.396165,ERD1
5058,917888.271034,603166.234685,1087.651484,CNL
5059,917868.815234,603183.004565,1087.488907,CNL
5060,917870.671269,603185.120035,1088.533469,ERD1
5061,917880.242650,603196.429527,1088.272438,ERD
5062,917885.220071,603201.992081,1085.294775,TOE
5063,918094.035782,602976.164773,1087.585868,CNL ST
5064,918094.662034,602976.845395,1087.660783,ERD ST
5065,918102.223087,602985.527060,1087.455010,ERD1 ST
5066,918111.933781,602995.114182,1085.444314,TOE ST
5067,918131.172222,602976.322740,1085.627854,TOE
5068,918122.194357,602966.763882,1087.532844,ERD1
5069,918113.313732,602959.029080,1087.614678,ERD
5070,918112.361657,602957.794899,1087.401092,CNL
5071,918130.113973,602939.947327,1087.288819,CNL
5072,918131.546051,602940.430744,1087.444186,ERD
5073,918139.920241,602949.543416,1087.573410,ERD1
5074,918144.326789,602954.184239,1085.998281,TOE
5075,918161.852872,602936.420848,1086.198819,TOE
5076,918156.374013,602931.237540,1087.755061,ERD1
```

```
5077,918147.530180,602923.070785,1087.655207,ERD
5078,918146.897413,602922.369477,1087.503239,CNL
5079,918163.916465,602903.122818,1087.476974,CNL
5080,918165.088177,602904.402280,1088.069642,ERD
5081,918174.218030,602912.937289,1087.799280,ERD1
5082,918179.143457,602917.623545,1086.265213,TOE
5083,917841.044486,603152.644728,1087.791882,CNL ST
5084,917840.313576,603151.787282,1088.038307,ERD ST
5085,917830.474869,603136.249829,1087.987052,ERD1 ST
5086,917823.518434,603128.554781,1086.260105,TOE ST
5087,917849.881512,603111.903689,1086.975648,TOE
5088,917853.607123,603116.273328,1087.917277,ERD1
5089,917864.891364,603129.526399,1088.124753,ERD
5090,917865.391590,603130.401455,1087.844633,CNL
5091,917884.786918,603112.763677,1087.766587,CNL
5092,917883.965385,603111.891034,1088.117560,ERD
5093,917871.422710,603098.265933,1087.911373,ERD1
5094,917869.083344,603095.165508,1086.590052,TOE
5095,917887.285168,603075.996979,1086.330356,TOE
5096,917891.303396,603080.731369,1087.475802,ERD1
5097,917903.469669,603094.409055,1088.228749,ERD
5098,917904.076941,603095.442491,1087.766911,CNL
5099,917922.992378,603078.235616,1087.857626,CNL
5100,917922.736191,603077.079107,1088.208727,ERD
5101,917911.289641,603064.612371,1087.440324,ERD1
5102,917906.221863,603058.174649,1086.181998,TOE
5103,917924.073639,603041.209519,1086.142504,TOE
5104,917929.978625,603048.051384,1087.294219,ERD1
5105,917940.605707,603060.858827,1088.056546,ERD
5106,917941.084916,603061.678655,1087.844924,CNL
5107,918068.045720,602945.001151,1087.728433,CNL ST
5108,918066.856656,602943.902158,1088.211520,ERD ST
5109,918054.959244,602930.673715,1088.223961,ERD1 ST
5110,918044.872015,602919.875411,1086.391308,TOE ST
5111,918061.497866,602903.354629,1085.819504,TOE
5112,918072.481797,602914.215845,1087.876685,ERD1
5113,918084.972090,602926.686769,1088.261700,ERD
5114,918085.776244,602927.370100,1087.788273,CNL
5115,918103.561072,602910.237360,1087.820665,CNL
5116,918102.848085,602909.305649,1088.251480,ERD
5117,918091.111332,602897.188533,1087.782178,ERD1
5118,918077.498652,602882.992183,1085.278893,TOE
5119,918095.772205,602862.904198,1085.199349,TOE
5120,918108.698541,602876.376356,1087.623479,ERD1
5121,918121.954288,602889.173493,1088.211061,ERD
5122,918124.162469,602889.103051,1087.846501,CNL
5123,918139.489106,602872.236738,1087.612605,CNL
5124,918138.017640,602871.166330,1088.218622,ERD
5125,918125.388167,602859.968811,1087.566501,ERD1
5126,918116.608731,602850.435893,1085.632129,TOE
5127,918133.038923,602928.135624,1081.677008,TOE ST
5128,917921.976796,603128.431943,1081.780090,TOE
5129,918127.558012,602895.462709,1081.574033,TOE ST
5130,917686.390200,603300.980659,1082.150149,TOE
5131,918238.877446,603346.630761,1087.132370,BSCK
5200,918309.599146,599558.393402,1071.907049,BSCK
5201,918278.396785,599284.314637,1073.006195,FSCK
5202,918301.762272,599343.161902,1072.385671,TOP ST
5203,918301.738371,599318.481560,1072.167844,TOP
5204,918302.113226,599292.337290,1071.954926,TOP
5205,918301.698939,599267.580039,1071.850524,TOP
5206,918301.837332,599242.397268,1071.756834,TOP
5207,918274.216398,599242.574787,1072.412253,TOP1 ST
```

1031XT01.ASC

```
5208,918273.888601,599267.743151,1072.605957,TOP1
5209,918273.921158,599292.539448,1073.010934,TOP1
5210,918274.620527,599317.552799,1073.125470,TOP1
5211,918274.906546,599342.643772,1073.345221,TOP1
5212,918271.858979,599342.768616,1071.391755,GB ST
5213,918271.433258,599317.717401,1071.239373,GB
5214,918271.392649,599292.679299,1071.357589,GB
5215,918271.775625,599267.722664,1071.423394,GB
5216,918271.911585,599242.703482,1071.103744,GB
5217,918212.787726,599241.816782,1072.071956,TOP ST
5218,918212.702171,599266.426440,1072.221225,TOP
5219,918212.603394,599291.732107,1072.443882,TOP
5220,918212.395654,599316.735812,1072.023073,TOP
5221,918212.421299,599341.623672,1072.093094,TOP
5222,918234.549321,599341.877757,1073.045862,TOP1 ST
5223,918236.984221,599341.791052,1071.424093,GB ST
5224,918237.542025,599316.827089,1071.215389,GB
5225,918234.893460,599316.786763,1073.016503,TOP1
5226,918234.839106,599291.723929,1072.938611,TOP1
5227,918237.535127,599291.872181,1071.254069,GB
5228,918238.338457,599266.603915,1071.155300,GB
5229,918235.410387,599266.912643,1073.036653,TOP1
5230,918235.346096,599241.809622,1073.027738,TOP1
5231,918237.962474,599241.745417,1071.144054,GB
5232,918222.009211,599241.656438,1072.658398,ERD ST
5233,918222.246300,599266.508256,1072.722778,ERD
5234,918221.658799,599291.771751,1072.806820,ERD
5235,918221.490418,599316.642314,1072.901796,ERD
5236,918221.032515,599340.816545,1072.920240,ERD
5237,918219.465021,599241.417633,1072.535220,OHE ST
5238,918220.057231,599284.930734,1073.221240,PP OHE
5239,918219.246362,599313.806916,1073.141226,DG
5240,918219.055645,599341.523875,1072.823293,OHE
5241,918243.498542,599242.197124,1065.675672,TOE ST
5242,918243.563995,599266.971747,1065.825299,TOE
5243,918243.162771,599291.474304,1066.004386,TOE
5244,918242.776515,599316.921510,1065.945409,TOE
5245,918242.089851,599342.075836,1066.022749,TOE
5246,918266.681139,599342.575614,1065.794172,TOE1 ST
5247,918266.369345,599317.723807,1065.704123,TOE1
5248,918266.492989,599292.734160,1065.900818,TOE1
5249,918266.383795,599267.605358,1065.567558,TOE1
5250,918266.568014,599242.912745,1065.428791,TOE1
5251,918309.599147,599558.393435,1071.881624,BSCK2
5252,918212.829100,602852.415900,1081.630000,TOE10
5253,917829.130300,603216.542700,1081.830000,TOE10
5254,918204.861900,602824.405900,1081.470000,TOE11
5255,917859.403400,603141.948500,1081.920000,TOE11
```

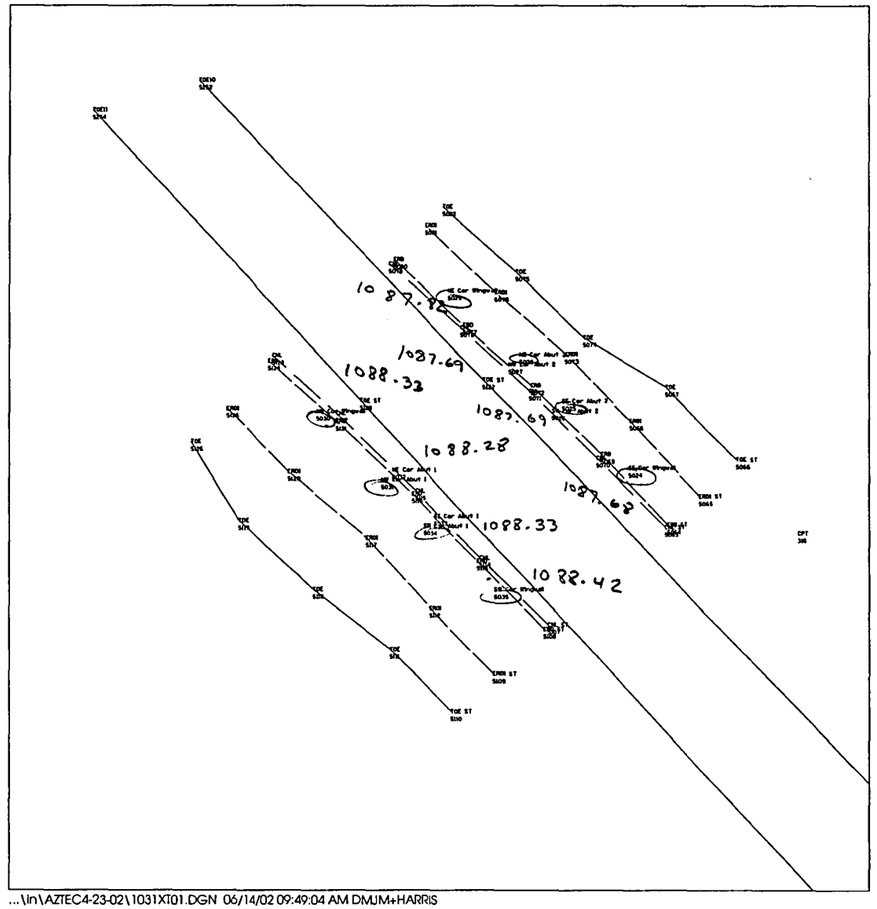

...\In\AZTEC4-23-02\1031XT01.DGN 06/14/02 09:49:04 AM DMJM+HARRIS

50 SCALE
83RD AVE PED BRIDGE

General Unit Definitions

$kips := 1000lbf$ $\quad pcf := \frac{lbf}{ft^3}$ $\quad CY := 27ft^3$ $\quad lf := ft$

$kcf := 1000pcf$ $\quad ksi := 1000psi$ $\quad sqft := ft^2$ $\quad sqyd := 9ft^2$

$wconc := 150pcf$ weight of concrete

Structural Quantities (f'c = 4000 psi) - CLASS AA

Includes:
- Abutment caps
- Backwalls
- Wingwalls
- Retaining Walls
- Approach slabs

Abutment 1

$abut1maincap := (1088.24ft - 1085.24ft)\cdot[12ft + 10in + 2\cdot(1ft + 11in)]\cdot(1ft + 9in + 11in + 14in)$

$abut1maincap = 7.1\,CY$

$abut1stem := [12ft + 10in + 2\cdot(1ft + 11in)]\cdot(14\cdot in\cdot 1.62\cdot ft) + 10\cdot ft\cdot 1.5\cdot ft\cdot 1\cdot ft + 2\cdot(10\cdot in)\cdot(1.62\cdot ft)\cdot(1\cdot ft + 9\cdot in + 11\cdot in)$

$abut1stem = 2\,CY$

$abut1wing := 2\cdot(68.58sqft)\cdot(14in)$

$abut1wing = 5.9\,CY$

$abut1retwall := (4.36\cdot sqft)\cdot(7\cdot ft)\cdot 2$

$abut1retwall = 2.3\,CY$

$fillets := 0.17\cdot CY$

$abut1TOTAL := abut1maincap + abut1stem + abut1wing + abut1retwall + fillets$ $\quad \boxed{abut1TOTAL = 17.4\,CY}$

Abutment 2

$abut2maincap := (1087.46ft - 1084.46ft)\cdot[12ft + 10in + 2\cdot(1ft + 11in)]\cdot(1ft + 9in + 11in + 14in)$

$abut2maincap = 7.1\,CY$

$abut2stem := [12ft + 10in + 2\cdot(1ft + 11in)]\cdot(14in\cdot 1.54\cdot ft) + 10\cdot ft\cdot 1.5\cdot ft\cdot 1\cdot ft + 2\cdot(10\cdot in)\cdot(1.54\cdot ft)\cdot(1\cdot ft + 9\cdot in + 11\cdot in)$

$abut2stem = 1.9\,CY$

$abut2wing := 2\cdot(68.58\cdot sqft)\cdot(14in)$

$abut2wing = 5.9\,CY$

Checked by: CA
Date: 7/10/02

$abut2retwall := (4.29 \cdot sqft) \cdot (7 \cdot ft) \cdot 2$

$abut2retwall = 2.2\,CY$

$fillets = 0.17\,CY$

$abut2TOTAL := abut2maincap + abut2stem + abut2wing + abut2retwall + fillets$ $\boxed{abut2TOTAL = 17.3\,CY}$

Approach Slabs (2)

$apprslab := 2 \cdot 10ft \cdot 16 \cdot ft \cdot 1 \cdot ft$

$\boxed{apprslab = 11.9\,CY}$

Drilled Shafts

Abutment Drilled Shafts - ~~24"~~ 30" ϕ

$Abut1shaft := 2 \cdot (1085.49ft - 1055.49ft)$ $Abut1shaft = 60\,lf$

$Abut2shaft := 2 \cdot (1084.71ft - 1054.71ft)$ $Abut2shaft = 60\,lf$

Shotcrete

$Abut1shot := 10sqyd$ $Abut1shot = 10\,sqyd$

$Abut2shot := 10sqyd$ $Abut2shot = 10\,sqyd$

Reinforcing Steel - by location - calculated utilzing spreadsheet

$reinfabut1 := 2415 \cdot lb$

$reinfabut2 := 2413 \cdot lb$

$reinfapprslab := 219\cancel{4}2 \cdot lb$

$reinftotal := reinfabut1 + reinfabut2 + reinfapprslab$ $reinftotal = 7022\,lb$

Checked by: GAL
Date: 7/10/02

Concrete Painting

Wingwall and Retaining Walls

$Paint := 4 \cdot 18 \cdot ft \cdot (1.22 \cdot ft + 0.5 \cdot ft + 1.167 \cdot ft) + 4 \cdot 7 \cdot ft \cdot (0.46 \cdot ft + 0.5 \cdot ft + 0.8333 \cdot ft)$

$Paint = 258.1\, ft^2$

Excavation - Abutment 1

Excavation to include abutment cap, wingwalls, and retaining walls

Abutments

$abut1excv := [\,16ft + 8in + 2 \cdot (1ft + 6in)\,] \cdot (3ft) \cdot [\,1 \cdot (3.83 \cdot ft) + 2 \cdot (1ft + 6in)\,]$

$abut1excv = 14.9\, CY$

Wingwalls

$wing1excv := 2 \cdot [\,14in + 2 \cdot (1ft + 6in)\,] \cdot 2.64ft \cdot (18 \cdot ft - 1.5 \cdot ft)$

$wing1excv = 13.4\, CY$

$retwallexcv := 2 \cdot (7 \cdot ft + 1.5 \cdot ft) \cdot (2 \cdot ft) \cdot [\,3 \cdot ft + 2(1.5 \cdot ft)\,]$

$retwallexcv = 7.6\, CY$

$Total1EXCV := abut1excv + wing1excv + retwallexcv$

$\boxed{Total1EXCV = 35.9\, CY}$

Excavation - Abutment 2

Excavation to include abutment cap, wingwalls, and retaining walls.

Abutments

$abut2excv := [\,16ft + 8in + 2 \cdot (1ft + 6in)\,] \cdot (3ft) \cdot [\,1 \cdot (3.83 \cdot ft) + 2 \cdot (1ft + 6in)\,]$

$abut2excv = 14.9\, CY$

Wingwalls

$wing2excv := 2 \cdot [\,14in + 2 \cdot (1ft + 6in)\,] \cdot 2.64 \cdot ft \cdot (18.0ft - 1.5 \cdot ft)$

$wing2excv = 13.4\, CY$

$Total2EXCV := abut2excv + wing2excv + retwallexcv$

$\boxed{Total2EXCV = 35.9\, CY}$

Checked by: CAL
Date: 7/10/02

Backfill - Abutment 1

Abutments

$abut1back := (16ft + 8in)\cdot(3ft)\cdot(4.62ft)$

$abut1back = 8.6\,CY$

Approach Slab

$AppSlab1 := 1\cdot ft\cdot(16\cdot ft - 3\cdot ft)\cdot 10\cdot ft$

$AppSlab1 = 4.8\,CY$

Wingwalls

$wing1back := 2\cdot(3.81ft)\cdot(18\cdot ft)\cdot 3\cdot ft$

$wing1back = 15.2\,CY$

$retwallback := 2\cdot 3\cdot ft\cdot 2\cdot ft\cdot 7\cdot ft$

$retwallback = 3.1\,CY$

$Total1back := abut1back + wing1back + AppSlab1 + retwallback$

$\boxed{Total1back = 31.7\,CY}$

Backfill - Abutment 2

Abutments

$abut2back := (16ft + 8in)\cdot(3ft)\cdot(4.54ft)$

$abut2back = 8.4\,CY$

Approach Slab

$AppSlab2 := 1\cdot ft\cdot(16\cdot ft - 3\cdot ft)\cdot 10\cdot ft$

$AppSlab2 = 4.8\,CY$

Wingwalls

$wing2back := 2\cdot(3.77ft)\cdot(18\cdot ft)\cdot 3\cdot ft$

$wing2back = 15.1\,CY$

$Total2back := abut2back + wing2back + AppSlab2 + retwallback$

$\boxed{Total2back = 31.4\,CY}$

Checked by: CAL
Date: 7/10/02

Superstructure Steel

Sheet Description	Reinforcement (lbs)
TOTAL	lb

Abutment 1 Steel

Sheet Description	Reinforcement (lbs)
Abutment 1 Cap and Backwall	1042
Wingwalls and Retaining Walls	1373
Approach Slab	1096
TOTAL	3512 lb

Abutment 2 Steel

Sheet Description	Reinforcement (lbs)
Abutment 2 Cap and Backwall	1042
Wingwalls and Retaining Walls	1371
Approach Slab	1096
TOTAL	3509 lb

Pier Steel

Sheet Description	Reinforcement (lbs)
TOTAL	7021 lb

S-6.05 Abutment 1 Plan, Elevation & Section

Abutment Length = 16.670 ft

Bar Size	Metric or English?	Description	Bar Lengths - Enter in ft. or meters depending on unit system: Bend 1	Bend 2	Bend 3	Bend 4	Bend 5	Bend 6	# Laps	Lap length	Bar Space (ft)	# bars	Bar Wt. per ft. or m	Total Wt. lb or kg.
4	English	Stirrup Bottom section	3.500	2.500	0.670	0.670						12	0.668	59
4	English	Stirrup Top Section	3.500	0.670	0.670							12	0.668	39
5	English	Approach Slab Seat	2.500	0.670	1.830	1.170						11	1.043	71
4	English	U bars backwall	2.500	0.833	2.500							12	0.668	47
4	English	Bottom Cap - Cont.	16.340									4	0.668	44
6	English	Top Cap - Cont.	1.170	16.340	1.170							4	2.670	200
4	English	Abut Face - Cont.	16.340									1	0.668	11
6	English	Abut Face -Cont.	16.34									4	1.502	98
6	English	Backwall - Cont.	16.34									2	1.502	49
5	English	Backwall - Cont.	16.34									1	1.043	17
5	English	Approach Slab Seat - Cont.	9.67									2	1.043	20
5	English	Approach Slab Seat - Verts	1.750									11	1.043	20
4	English	Shear keys - Verts	4.290									12	0.668	34
4	English	Shear keys - Hortz.	3.500									14	0.668	33
6	English	Splice Bars to Wingwall	2.670	2.670								16	1.502	128
7	English	Splice Bars to Wingwall	2.670	2.670								4	2.044	44
5	English	Splice Bars to Wingwall	2.000	2.000	2.000							10	1.043	63
7	English	Backwall - Cont.	16.34									2	2.044	67
													#N/A	0
													#N/A	0
													#N/A	0
													#N/A	0
													#N/A	0
													#N/A	0
													#N/A	0
													#N/A	0
													#N/A	0
													#N/A	0
Note: Straight bars are indicated as having only one "bend." *** See Quantity Calculations													TOTAL	1042

S-6.05 Abutment 2 Plan, Elevation & Section

Abutment Length = 16.670 ft

Bar Size	Metric or English?	Description	Bar Lengths - Enter in ft. or meters depending on unit system: Bend 1	Bend 2	Bend 3	Bend 4	Bend 5	Bend 6	# Laps	Lap length	Bar Space (ft)	# bars	Bar Wt. per ft. or m	Total Wt. lb or kg.
4	English	Stirrup Bottom section	3.500	2.500	0.670	0.670						12	0.668	59
4	English	Stirrup Top Section	3.500	0.670	0.670							12	0.668	39
5	English	Approach Slab Seat	2.500	0.670	1.830	1.170						11	1.043	71
4	English	U bars backwall	2.500	0.833	2.500							12	0.668	47
4	English	Bottom Cap - Cont.	16.340									4	0.668	44
8	English	Top Cap - Cont.	1.170	16.340	1.170							4	2.670	200
4	English	Abut Face - Cont.	16.340									1	0.668	11
6	English	Abut Face -Cont.	16.34									4	1.502	98
6	English	Backwall - Cont.	16.34									2	1.502	49
5	English	Backwall - Cont.	16.34									1	1.043	17
5	English	Approach Slab Seat - Cont.	9.67									2	1.043	20
5	English	Approach Slab Seat - Verts	1.750									11	1.043	20
4	English	Shear keys - Verts	4.240									12	0.668	34
4	English	Shear keys - Hortz.	3.500									14	0.668	33
6	English	Splice Bars to Wingwall	2.670	2.670								16	1.502	128
7	English	Splice Bars to Wingwall	2.670	2.670								4	2.044	44
5	English	Splice Bars to Wingwall	2.000	2.000	2.000							10	1.043	63
7	English	Backwall - Cont.	16.34									2	2.044	67
													#N/A	0
													#N/A	0
													#N/A	0
													#N/A	0
													#N/A	0
													#N/A	0
													#N/A	0
													#N/A	0
													#N/A	0
													#N/A	0
Note: Straight bars are indicated as having only one "bend." *** See Quantity Calculations													TOTAL	1042

S-6.06 Wingwalls Abutment 1

Wingwall Length = 18.000 ft

Bar Size	Metric or English?	Description	Bar Lengths - Enter in ft. or meters depending on unit system: Bend 1	Bend 2	Bend 3	Bend 4	Bend 5	Bend 6	# Lap	Lap length	Bar Space (ft)	# bars	Bar Wt. per ft. or m	Total Wt. lb or kg.
8	English	Top -Cont.	17.670									4	2.670	189
6	English	Wall - Cont.	17.670									16	1.502	425
5	English	Wall - Cont.	17.670									10	1.043	184
4	English	U Bars	2.500	0.833	2.500							26	0.668	101
5	English	Verts	3.480									52	1.043	189
													#N/A	0
													#N/A	0
													#N/A	0
													#N/A	0
													#N/A	0
													#N/A	0
													#N/A	0
													#N/A	0
													#N/A	0
													#N/A	0
													#N/A	0
													#N/A	0
													#N/A	0
													#N/A	0
													#N/A	0
													#N/A	0
													#N/A	0
													#N/A	0
													#N/A	0
													#N/A	0
													#N/A	0
													#N/A	0
													#N/A	0
													#N/A	0
Note: Straight bars are indicated as having only one "bend." *** See Quantity Calculations													TOTAL	1088

S-6.06 Wingwalls Abutment 2

Wingwall Length = 18.000 ft

Bar Size	Metric or English?	Description	Bar Lengths - Enter in ft. or meters depending on unit system: Bend 1	Bend 2	Bend 3	Bend 4	Bend 5	Bend 6	# Laps	Lap length	Bar Space (ft)	# bars	Bar Wt. per ft. or m	Total Wt. lb or kg.
8	English	Top -Cont.	17.670									4	2.670	189
6	English	Wall - Cont.	17.670									16	1.502	425
5	English	Wall - Cont.	17.670									10	1.043	184
4	English	U Bars	2.500	0.833	2.500							26	0.668	101
5	English	Verts	3.440									52	1.043	187
													#N/A	0
													#N/A	0
													#N/A	0
													#N/A	0
													#N/A	0
													#N/A	0
													#N/A	0
													#N/A	0
													#N/A	0
													#N/A	0
													#N/A	0
													#N/A	0
													#N/A	0
													#N/A	0
													#N/A	0
													#N/A	0
													#N/A	0
													#N/A	0
													#N/A	0
													#N/A	0
													#N/A	0
													#N/A	0
													#N/A	0
Note: Straight bars are indicated as having only one "bend." *** See Quantity Calculations													TOTAL	1086

S-6.06 Retaining Walls Abutment 1

RW Length = 7.000 ft

			Bar Lengths - Enter in ft. or meters depending on unit system								Bar		Bar Wt.	Total Wt.
Bar Size	Metric or English?	Description	Bend 1	Bend 2	Bend 3	Bend 4	Bend 5	Bend 6	# Laps	Lap length	Space (ft)	# bars	per ft. or m	lb or kg.
5	English	Ftg into Wall Verts	2.000	2.583								16	1.043	76
4	English	Wall Verts	2.583									12	0.668	21
5	English	Top Transverse Bars Ftg	2.667									20	1.043	56
5	English	Ftg- Long.	6.667									14	1.043	97
4	English	Wall - Cont.	6.667									8	0.668	36
													#N/A	0
													#N/A	0
													#N/A	0
													#N/A	0
													#N/A	0
													#N/A	0
													#N/A	0
													#N/A	0
													#N/A	0
													#N/A	0
													#N/A	0
													#N/A	0
													#N/A	0
													#N/A	0
													#N/A	0
													#N/A	0
													#N/A	0
													#N/A	0
													#N/A	0
													#N/A	0
													#N/A	0
													#N/A	0
													#N/A	0
Note: Straight bars are indicated as having only one "bend." *** See Quantity Calculations													TOTAL	286

S-6.06 Retaining Walls Abutment2

RW Length = 7.000 ft

Bar Size	Metric or English?	Description	Bar Lengths - Enter in ft. or meters depending on unit system: Bend 1	Bend 2	Bend 3	Bend 4	Bend 5	Bend 6	# Laps	Lap length	Bar Space (ft)	# bars	Bar Wt. per ft. or m	Total Wt. lb or kg.
5	English	Ftg into Wall Verts	2.000	2.583								16	1.043	76
4	English	Wall Verts	2.583									12	0.668	21
5	English	Top Transverse Bars Ftg	2.667									20	1.043	56
5	English	Ftg- Long.	6.667									14	1.043	97
4	English	Wall - Cont.	6.667									8	0.668	36
													#N/A	0
													#N/A	0
													#N/A	0
													#N/A	0
													#N/A	0
													#N/A	0
													#N/A	0
													#N/A	0
													#N/A	0
													#N/A	0
													#N/A	0
													#N/A	0
													#N/A	0
													#N/A	0
													#N/A	0
													#N/A	0
													#N/A	0
													#N/A	0
													#N/A	0
													#N/A	0
													#N/A	0
													#N/A	0
													#N/A	0
Note: Straight bars are indicated as having only one "bend." *** See Quantity Calculations													TOTAL	286

(3) of (6)

S-6.06 Approach Slab 1

Approach Slab Lengtl 16.000 ft

Bar Size	Metric or English?	Description	Bar Lengths - Enter in ft. or meters depending on unit system								Bar		Bar Wt.	Total Wt.
			Bend 1	Bend 2	Bend 3	Bend 4	Bend 5	Bend 6	# Laps	Lap length	Space (ft)	# bars	per ft. or m	lb or kg.
4	English	Top Long.	15.667									8	0.668	84
8	English	Bott Long.	15.670									15	2.670	628
4	English	U Bars	1.000	0.540	1.000							8	0.668	14
4	English	U Bars	4.000	0.540	0.750							8	0.668	28
5	English	Top and Bottom Transverse	9.667									34	1.043	343
													#N/A	0
													#N/A	0
													#N/A	0
													#N/A	0
													#N/A	0
													#N/A	0
													#N/A	0
													#N/A	0
													#N/A	0
													#N/A	0
													#N/A	0
													#N/A	0
													#N/A	0
													#N/A	0
													#N/A	0
													#N/A	0
													#N/A	0
													#N/A	0
													#N/A	0
													#N/A	0
													#N/A	0
													#N/A	0
													#N/A	0
Note: Straight bars are indicated as having only one "bend." *** See Quantity Calculations													TOTAL	1096

S-6.06 Approach Slab 2

Approach Slab Lengtl 16.000 ft

			Bar Lengths - Enter in ft. or meters depending on unit system								Bar		Bar Wt.	Total Wt.
Bar Size	Metric or English?	Description	Bend 1	Bend 2	Bend 3	Bend 4	Bend 5	Bend 6	# Laps	Lap length	Space (ft)	# bars	per ft. or m	lb or kg.
4	English	Top Long.	15.667									8	0.668	84
8	English	Bott Long.	15.670									15	2.670	628
4	English	U Bars	1.000	0.540	1.000							8	0.668	14
4	English	U Bars	4.000	0.540	0.750							8	0.668	28
5	English	Top and Bottom Transverse	9.667									34	1.043	343
													#N/A	0
													#N/A	0
													#N/A	0
													#N/A	0
													#N/A	0
													#N/A	0
													#N/A	0
													#N/A	0
													#N/A	0
													#N/A	0
													#N/A	0
													#N/A	0
													#N/A	0
													#N/A	0
													#N/A	0
													#N/A	0
													#N/A	0
													#N/A	0
													#N/A	0
													#N/A	0
													#N/A	0
													#N/A	0
													#N/A	0
Note: Straight bars are indicated as having only one "bend." *** See Quantity Calculations													TOTAL	1096

(6) 0 ¶ (6)

```
**************************************************
*                                                *
*           STAAD.Pro                            *
*           Version  2001    Build 1005          *
*           Proprietary Program of               *
*           RESEARCH ENGINEERS, Intl.            *
*           Date=    JUL  3, 2002                *
*           Time=    16: 4:49                    *
*                                                *
*      USER ID: Frederic R. Harris, Inc.         *
**************************************************
```

INPUT VERIFICATION ONLY
DRC 6/02

```
 1. STAAD SPACE ABUTMENTS
 2. START JOB INFORMATION
 3. JOB NAME BHOC - 83RD PED BRIDGE
 4. JOB CLIENT FCD
 5. JOB NO 046106888.0020
 6. JOB COMMENT ABUT ANALYSIS
 7. ENGINEER NAME SEO
 8. ENGINEER DATE JUN-02
 9. END JOB INFORMATION
10. INPUT WIDTH 79
11. UNIT FEET KIP
12. JOINT COORDINATES
13. 1 0 1086.74 0; 2 18 1086.74 0; 3 19.9167 1086.74 0; 4 32.75 1086.74 0
14. 5 34.67 1086.74 0; 6 52.67 1086.74 0; 7 19.9166 1070 0; 8 32.75 1070 0
15. MEMBER INCIDENCES
16. 1 1 2; 2 2 3; 3 3 4; 4 4 5; 5 5 6; 6 3 7; 7 4 8
17. MEMBER PROPERTY AMERICAN
18. 1 5 PRIS YD 3.75 ZD 1.17
19. 2 TO 4 PRIS YD 3 ZD 3.83
20. 6 7 PRIS YD 2.5
21. UNIT INCHES KIP
22. CONSTANTS
23. E 3605 MEMB 1 TO 7
24. POISSON 0.17 MEMB 1 TO 7
25. DENSITY 8.68E-005 MEMB 1 TO 7
26. ALPHA 6.5E-006 MEMB 1 TO 7
27. UNIT FEET KIP
28. SUPPORTS
29. 7 8 FIXED
30. LOAD 1 DL AND SDL - SUPER
31. MEMBER LOAD
32. 1 5 UNI GY -0.66
33. 2 TO 4 UNI GY -2.30
34. 2 TO 4 UMOM GX -1.19
35. 6 7 UNI GY -0.74
36. JOINT LOAD
37. 3 4 FY -15.15
38. 2 5 MX -17.88
39. LOAD 2 EXCLUSION OF SUPERSTRUCTURE DEAD LOAD
40. JOINT LOAD
41. 3 4 FY 15.15
```

```
42. LOAD 3 LIVE LOAD
43. JOINT LOAD
44. 3 4 FY -10.72
45. LOAD 4 EARTH PRESSURE
46. MEMBER LOAD
47. 1 5 UNI GZ 0.51
48. 2 TO 4 UNI GZ 0.61
49. LOAD 5 WIND ON SUPERSTRUCTURE
50. JOINT LOAD
51. 3 4 FX 4.5
52. 3 FY 8.78
53. 4 FY -2.48
54. LOAD 6 RST
55. JOINT LOAD
56. 3 4 FZ 1.23
57. 2 5 MX 1.85
58. LOAD COMB 7 SERVICE LOAD GROUP I
59. 1 1.0 3 1.0 4 1.0
60. LOAD COMB 8 SERVICE LOAD GROUP II
61. 1 0.8 4 0.8 5 0.8
62. LOAD COMB 9 SERVICE LOAD GROUP III
63. 1 0.8 3 0.8 4 0.8 5 0.24
64. LOAD COMB 10 SERVICE LOAD GROUP IV
65. 1 0.8 3 0.8 4 0.8 6 0.8
66. LOAD COMB 11 GROUP V
67. 1 0.72 4 0.72 5 0.72 6 0.72
68. LOAD COMB 12 GROUP VI
69. 1 0.72 3 0.72 4 0.72 5 0.22 6 0.72
70. LOAD COMB 13 GROUP I WITHOUT SUPERSTRUCTURE LOADING
71. 1 1.0 2 1.0 4 1.0
72. PERFORM ANALYSIS


        P R O B L E M   S T A T I S T I C S
        -----------------------------------

  NUMBER OF JOINTS/MEMBER+ELEMENTS/SUPPORTS =     8/     7/     2
  ORIGINAL/FINAL BAND-WIDTH=     4/     4/     12 DOF
  TOTAL PRIMARY LOAD CASES =     6, TOTAL DEGREES OF FREEDOM =     36
  SIZE OF STIFFNESS MATRIX =       1 DOUBLE  KILO-WORDS
  REQRD/AVAIL. DISK SPACE  =    12.0/   769.9 MB,  EXMEM =  925.2 MB

++ Processing Element Stiffness Matrix.              16: 4:50
++ Processing Global Stiffness Matrix.               16: 4:50
++ Processing Triangular Factorization.              16: 4:50
++ Calculating Joint Displacements.                  16: 4:50
++ Calculating Member  Forces.                       16: 4:50

73. LOAD LIST ALL
74. PRINT ANALYSIS RESULTS
```

JOINT DISPLACEMENT (INCH RADIANS) STRUCTURE TYPE = SPACE

JOINT	LOAD	X-TRANS	Y-TRANS	Z-TRANS	X-ROTAN	Y-ROTAN	Z-ROTAN
1	1	-0.00003	-0.08285	-0.04695	-0.00048	0.00000	0.00040
	2	0.00000	0.00119	0.00000	0.00000	0.00000	0.00000
	3	0.00000	-0.00085	0.00000	0.00000	0.00000	0.00000
	4	0.00000	0.00000	0.60640	0.00201	0.00201	0.00000
	5	0.02527	0.00858	0.00000	0.00000	0.00000	-0.00003
	6	0.00000	0.00000	0.02657	0.00021	0.00000	0.00000
	7	-0.00003	-0.08369	0.55944	0.00153	0.00201	0.00040
	8	0.02020	-0.05941	0.44755	0.00122	0.00161	0.00030
	9	0.00604	-0.06489	0.44755	0.00122	0.00161	0.00031
	10	-0.00002	-0.06695	0.46881	0.00139	0.00161	0.00032
	11	0.01818	-0.05347	0.42193	0.00125	0.00145	0.00027
	12	0.00554	-0.05837	0.42193	0.00125	0.00145	0.00028
	13	-0.00003	-0.08165	0.55944	0.00153	0.00201	0.00040
2	1	-0.00003	-0.00743	-0.04696	-0.00048	0.00000	0.00016
	2	0.00000	0.00119	0.00000	0.00000	0.00000	0.00000
	3	0.00000	-0.00085	0.00000	0.00000	0.00000	0.00000
	4	0.00000	0.00000	0.27402	0.00201	0.00010	0.00000
	5	0.02527	0.00185	0.00000	0.00000	0.00000	-0.00003
	6	0.00000	0.00000	0.02657	0.00021	0.00000	0.00000
	7	-0.00003	-0.00828	0.22707	0.00153	0.00010	0.00016
	8	0.02020	-0.00447	0.18165	0.00122	0.00008	0.00010
	9	0.00604	-0.00618	0.18165	0.00122	0.00008	0.00012
	10	-0.00002	-0.00662	0.20291	0.00139	0.00008	0.00013
	11	0.01818	-0.00402	0.18262	0.00125	0.00007	0.00009
	12	0.00554	-0.00555	0.18262	0.00125	0.00007	0.00011
	13	-0.00003	-0.00624	0.22707	0.00153	0.00010	0.00016
3	1	-0.00003	-0.00413	-0.04696	-0.00047	0.00000	0.00011
	2	0.00000	0.00119	0.00000	0.00000	0.00000	0.00000
	3	0.00000	-0.00085	0.00000	0.00000	0.00000	0.00000
	4	0.00000	0.00000	0.27184	0.00201	0.00008	0.00000
	5	0.02527	0.00113	0.00000	0.00000	0.00000	-0.00003
	6	0.00000	0.00000	0.02657	0.00020	0.00000	0.00000
	7	-0.00003	-0.00497	0.22488	0.00154	0.00008	0.00011
	8	0.02020	-0.00240	0.17990	0.00123	0.00006	0.00006
	9	0.00604	-0.00371	0.17990	0.00123	0.00006	0.00008
	10	-0.00002	-0.00398	0.20116	0.00140	0.00006	0.00009
	11	0.01818	-0.00216	0.18104	0.00126	0.00006	0.00006
	12	0.00554	-0.00333	0.18104	0.00126	0.00006	0.00007
	13	-0.00003	-0.00294	0.22488	0.00154	0.00008	0.00011
4	1	0.00003	-0.00413	-0.04696	-0.00047	0.00000	-0.00011
	2	0.00000	0.00119	0.00000	0.00000	0.00000	0.00000
	3	0.00000	-0.00085	0.00000	0.00000	0.00000	0.00000
	4	0.00000	0.00000	0.27186	0.00201	-0.00008	0.00000
	5	0.02527	-0.00064	0.00000	0.00000	0.00000	-0.00003
	6	0.00000	0.00000	0.02657	0.00020	0.00000	0.00000
	7	0.00003	-0.00498	0.22491	0.00154	-0.00008	-0.00011
	8	0.02024	-0.00381	0.17993	0.00123	-0.00006	-0.00011
	9	0.00609	-0.00413	0.17993	0.00123	-0.00006	-0.00010

SAY STAAD PRO MOD
IS OK - COMPARED T
L-PILE.

JOINT DISPLACEMENT (INCH RADIANS) STRUCTURE TYPE = SPACE

JOINT	LOAD	X-TRANS	Y-TRANS	Z-TRANS	X-ROTAN	Y-ROTAN	Z-ROTAN
	10	0.00002	-0.00398	0.20118	0.00140	-0.00006	-0.00009
	11	0.01822	-0.00343	0.18106	0.00126	-0.00006	-0.00010
	12	0.00558	-0.00372	0.18106	0.00126	-0.00006	-0.00009
	13	0.00003	-0.00294	0.22491	0.00154	-0.00008	-0.00011
5	1	0.00003	-0.00744	-0.04696	-0.00048	0.00000	-0.00016
	2	0.00000	0.00119	0.00000	0.00000	0.00000	0.00000
	3	0.00000	-0.00085	0.00000	0.00000	0.00000	0.00000
	4	0.00000	0.00000	0.27406	0.00201	-0.00010	0.00000
	5	0.02527	-0.00135	0.00000	0.00000	0.00000	-0.00003
	6	0.00000	0.00000	0.02657	0.00021	0.00000	0.00000
	7	0.00003	-0.00828	0.22711	0.00153	-0.00010	-0.00016
	8	0.02024	-0.00703	0.18169	0.00122	-0.00008	-0.00015
	9	0.00609	-0.00695	0.18169	0.00122	-0.00008	-0.00014
	10	0.00002	-0.00663	0.20294	0.00139	-0.00008	-0.00013
	11	0.01822	-0.00633	0.18265	0.00125	-0.00007	-0.00014
	12	0.00558	-0.00626	0.18265	0.00125	-0.00007	-0.00012
	13	0.00003	-0.00625	0.22711	0.00153	-0.00010	-0.00016
6	1	0.00003	-0.08289	-0.04696	-0.00048	0.00000	-0.00040
	2	0.00000	0.00119	0.00000	0.00000	0.00000	0.00000
	3	0.00000	-0.00085	0.00000	0.00000	0.00000	0.00000
	4	0.00000	0.00000	0.60653	0.00201	-0.00201	0.00000
	5	0.02527	-0.00809	0.00000	0.00000	0.00000	-0.00003
	6	0.00000	0.00000	0.02657	0.00021	0.00000	0.00000
	7	0.00003	-0.08373	0.55957	0.00153	-0.00201	-0.00040
	8	0.02024	-0.07278	0.44766	0.00122	-0.00161	-0.00035
	9	0.00609	-0.06893	0.44766	0.00122	-0.00161	-0.00033
	10	0.00002	-0.06698	0.46891	0.00139	-0.00161	-0.00032
	11	0.01822	-0.06550	0.42202	0.00125	-0.00145	-0.00031
	12	0.00558	-0.06207	0.42202	0.00125	-0.00145	-0.00030
	13	0.00003	-0.08169	0.55957	0.00153	-0.00201	-0.00040
7	1	0.00000	0.00000	0.00000	0.00000	0.00000	0.00000
	2	0.00000	0.00000	0.00000	0.00000	0.00000	0.00000
	3	0.00000	0.00000	0.00000	0.00000	0.00000	0.00000
	4	0.00000	0.00000	0.00000	0.00000	0.00000	0.00000
	5	0.00000	0.00000	0.00000	0.00000	0.00000	0.00000
	6	0.00000	0.00000	0.00000	0.00000	0.00000	0.00000
	7	0.00000	0.00000	0.00000	0.00000	0.00000	0.00000
	8	0.00000	0.00000	0.00000	0.00000	0.00000	0.00000
	9	0.00000	0.00000	0.00000	0.00000	0.00000	0.00000
	10	0.00000	0.00000	0.00000	0.00000	0.00000	0.00000
	11	0.00000	0.00000	0.00000	0.00000	0.00000	0.00000
	12	0.00000	0.00000	0.00000	0.00000	0.00000	0.00000
	13	0.00000	0.00000	0.00000	0.00000	0.00000	0.00000
8	1	0.00000	0.00000	0.00000	0.00000	0.00000	0.00000
	2	0.00000	0.00000	0.00000	0.00000	0.00000	0.00000
	3	0.00000	0.00000	0.00000	0.00000	0.00000	0.00000
	4	0.00000	0.00000	0.00000	0.00000	0.00000	0.00000
	5	0.00000	0.00000	0.00000	0.00000	0.00000	0.00000

JOINT DISPLACEMENT (INCH RADIANS) STRUCTURE TYPE = SPACE

JOINT	LOAD	X-TRANS	Y-TRANS	Z-TRANS	X-ROTAN	Y-ROTAN	Z-ROTAN
	6	0.00000	0.00000	0.00000	0.00000	0.00000	0.00000
	7	0.00000	0.00000	0.00000	0.00000	0.00000	0.00000
	8	0.00000	0.00000	0.00000	0.00000	0.00000	0.00000
	9	0.00000	0.00000	0.00000	0.00000	0.00000	0.00000
	10	0.00000	0.00000	0.00000	0.00000	0.00000	0.00000
	11	0.00000	0.00000	0.00000	0.00000	0.00000	0.00000
	12	0.00000	0.00000	0.00000	0.00000	0.00000	0.00000
	13	0.00000	0.00000	0.00000	0.00000	0.00000	0.00000

SUPPORT REACTIONS -UNIT KIP FEET STRUCTURE TYPE = SPACE

JOINT	LOAD	FORCE-X	FORCE-Y	FORCE-Z	MOM-X	MOM-Y	MOM Z
7	1	-2.25	58.58	0.00	27.80	0.00	12.25
	2	0.00	-15.15	0.00	0.00	0.00	0.00
	3	0.00	10.72	0.00	0.00	0.00	0.00
	4	0.00	0.00	-14.26	-238.76	-3.97	0.00
	5	-4.50	-14.36	0.00	0.00	0.00	39.52
	6	0.00	0.00	-1.23	-22.44	0.00	0.00
	7	-2.25	69.30	-14.26	-210.97	-3.97	12.25
	8	-5.40	35.38	-11.41	-168.77	-3.18	41.42
	9	-2.88	51.99	-11.41	-168.77	-3.18	19.29
	10	-1.80	55.44	-12.39	-186.73	-3.18	9.80
	11	-4.86	31.84	-11.15	-168.05	-2.86	37.28
	12	-2.61	46.74	-11.15	-168.05	-2.86	17.52
	13	-2.25	43.43	-14.26	-210.97	-3.97	12.25
8	1	2.25	58.60	0.00	27.80	0.00	-12.25
	2	0.00	-15.15	0.00	0.00	0.00	0.00
	3	0.00	10.72	0.00	0.00	0.00	0.00
	4	0.00	0.00	-14.27	-238.81	3.99	0.00
	5	-4.50	8.06	0.00	0.00	0.00	39.52
	6	0.00	0.00	-1.23	-22.44	0.00	0.00
	7	2.25	69.32	-14.27	-211.01	3.99	-12.25
	8	-1.80	53.33	-11.41	-168.81	3.19	21.81
	9	0.72	57.39	-11.41	-168.81	3.19	-0.32
	10	1.80	55.45	-12.40	-186.76	3.19	-9.80
	11	-1.62	47.99	-11.16	-168.08	2.87	19.63
	12	0.63	51.68	-11.16	-168.08	2.87	-0.13
	13	2.25	43.45	-14.27	-211.01	3.99	-12.25

MEMBER END FORCES STRUCTURE TYPE = SPACE

ALL UNITS ARE -- KIP FEET

MEMBER	LOAD	JT	AXIAL	SHEAR-Y	SHEAR-Z	TORSION	MOM-Y	MOM-Z
1	1	1	0.00	0.00	0.00	0.00	0.00	0.00
		2	0.00	11.88	0.00	0.00	0.00	-106.92
	2	1	0.00	0.00	0.00	0.00	0.00	0.00
		2	0.00	0.00	0.00	0.00	0.00	0.00
	3	1	0.00	0.00	0.00	0.00	0.00	0.00
		2	0.00	0.00	0.00	0.00	0.00	0.00
	4	1	0.00	0.00	0.00	0.00	0.00	0.00
		2	0.00	0.00	-9.18	0.00	-82.62	0.00
	5	1	0.00	0.00	0.00	0.00	0.00	0.00
		2	0.00	0.00	0.00	0.00	0.00	0.00
	6	1	0.00	0.00	0.00	0.00	0.00	0.00
		2	0.00	0.00	0.00	0.00	0.00	0.00
	7	1	0.00	0.00	0.00	0.00	0.00	0.00
		2	0.00	11.88	-9.18	0.00	-82.62	-106.92
	8	1	0.00	0.00	0.00	0.00	0.00	0.00
		2	0.00	9.50	-7.34	0.00	-66.10	-85.54
	9	1	0.00	0.00	0.00	0.00	0.00	0.00
		2	0.00	9.50	-7.34	0.00	-66.10	-85.54
	10	1	0.00	0.00	0.00	0.00	0.00	0.00
		2	0.00	9.50	-7.34	0.00	-66.10	-85.54
	11	1	0.00	0.00	0.00	0.00	0.00	0.00
		2	0.00	8.55	-6.61	0.00	-59.49	-76.98
	12	1	0.00	0.00	0.00	0.00	0.00	0.00
		2	0.00	8.55	-6.61	0.00	-59.49	-76.98
	13	1	0.00	0.00	0.00	0.00	0.00	0.00
		2	0.00	11.88	-9.18	0.00	-82.62	-106.92
2	1	2	0.00	-11.88	0.00	-17.88	0.00	106.92
		3	0.00	16.29	0.00	20.16	0.00	-133.92
	2	2	0.00	0.00	0.00	0.00	0.00	0.00
		3	0.00	0.00	0.00	0.00	0.00	0.00
	3	2	0.00	0.00	0.00	0.00	0.00	0.00
		3	0.00	0.00	0.00	0.00	0.00	0.00
	4	2	0.00	0.00	9.18	0.00	82.62	0.00
		3	0.00	0.00	-10.35	0.00	-101.34	0.00
	5	2	0.00	0.00	0.00	0.00	0.00	0.00
		3	0.00	0.00	0.00	0.00	0.00	0.00
	6	2	0.00	0.00	0.00	1.85	0.00	0.00
		3	0.00	0.00	0.00	-1.85	0.00	0.00
	7	2	0.00	-11.88	9.18	-17.88	82.62	106.92
		3	0.00	16.29	-10.35	20.16	-101.34	-133.92
	8	2	0.00	-9.50	7.34	-14.30	66.10	85.54
		3	0.00	13.03	-8.28	16.13	-81.07	-107.13
	9	2	0.00	-9.50	7.34	-14.30	66.10	85.54
		3	0.00	13.03	-8.28	16.13	-81.07	-107.13

MEMBER END FORCES STRUCTURE TYPE = SPACE

ALL UNITS ARE -- KIP FEET

MEMBER	LOAD	JT	AXIAL	SHEAR-Y	SHEAR-Z	TORSION	MOM-Y	MOM-Z
	10	2	0.00	-9.50	7.34	-12.82	66.10	85.54
		3	0.00	13.03	-8.28	14.65	-81.07	-107.13
	11	2	0.00	-8.55	6.61	-11.54	59.49	76.98
		3	0.00	11.73	-7.45	13.18	-72.96	-96.42
	12	2	0.00	-8.55	6.61	-11.54	59.49	76.98
		3	0.00	11.73	-7.45	13.18	-72.96	-96.42
	13	2	0.00	-11.88	9.18	-17.88	82.62	106.92
		3	0.00	16.29	-10.35	20.16	-101.34	-133.92
3	1	3	-2.25	14.75	0.00	7.64	0.00	108.53
		4	2.25	14.76	0.00	7.63	0.00	-108.58
	2	3	0.00	0.00	0.00	0.00	0.00	0.00
		4	0.00	0.00	0.00	0.00	0.00	0.00
	3	3	0.00	0.00	0.00	0.00	0.00	0.00
		4	0.00	0.00	0.00	0.00	0.00	0.00
	4	3	0.00	0.00	-3.91	-0.02	97.36	0.00
		4	0.00	0.00	-3.92	0.02	-97.38	0.00
	5	3	0.00	-5.58	0.00	0.00	0.00	-35.81
		4	0.00	5.58	0.00	0.00	0.00	-35.81
	6	3	0.00	0.00	0.00	0.00	0.00	0.00
		4	0.00	0.00	0.00	0.00	0.00	0.00
	7	3	-2.25	14.75	-3.91	7.62	97.36	108.53
		4	2.25	14.76	-3.92	7.65	-97.38	-108.58
	8	3	-1.80	7.34	-3.13	6.10	77.89	58.17
		4	1.80	16.27	-3.13	6.12	-77.90	-115.51
	9	3	-1.80	10.46	-3.13	6.10	77.89	78.23
		4	1.80	13.15	-3.13	6.12	-77.90	-95.46
	10	3	-1.80	11.80	-3.13	6.10	77.89	86.82
		4	1.80	11.81	-3.13	6.12	-77.90	-86.86
	11	3	-1.62	6.60	-2.82	5.49	70.10	52.36
		4	1.62	14.65	-2.82	5.51	-70.11	-103.96
	12	3	-1.62	9.40	-2.82	5.49	70.10	70.26
		4	1.62	11.86	-2.82	5.51	-70.11	-86.06
	13	3	-2.25	14.75	-3.91	7.62	97.36	108.53
		4	2.25	14.76	-3.92	7.65	-97.38	-108.58
4	1	4	0.00	16.30	0.00	20.16	0.00	133.97
		5	0.00	-11.88	0.00	-17.88	0.00	-106.92
	2	4	0.00	0.00	0.00	0.00	0.00	0.00
		5	0.00	0.00	0.00	0.00	0.00	0.00
	3	4	0.00	0.00	0.00	0.00	0.00	0.00
		5	0.00	0.00	0.00	0.00	0.00	0.00
	4	4	0.00	0.00	-10.35	0.00	101.37	0.00
		5	0.00	0.00	9.18	0.00	-82.62	0.00
	5	4	0.00	0.00	0.00	0.00	0.00	0.00
		5	0.00	0.00	0.00	0.00	0.00	0.00
	6	4	0.00	0.00	0.00	-1.85	0.00	0.00
		5	0.00	0.00	0.00	1.85	0.00	0.00

MEMBER END FORCES STRUCTURE TYPE = SPACE

ALL UNITS ARE -- KIP FEET

MEMBER	LOAD	JT	AXIAL	SHEAR-Y	SHEAR-Z	TORSION	MOM-Y	MOM-Z
	7	4	0.00	16.30	-10.35	20.16	101.37	133.97
		5	0.00	-11.88	9.18	-17.88	-82.62	-106.92
	8	4	0.00	13.04	-8.28	16.13	81.10	107.18
		5	0.00	-9.50	7.34	-14.30	-66.10	-85.54
	9	4	0.00	13.04	-8.28	16.13	81.10	107.18
		5	0.00	-9.50	7.34	-14.30	-66.10	-85.54
	10	4	0.00	13.04	-8.28	14.65	81.10	107.18
		5	0.00	-9.50	7.34	-12.82	-66.10	-85.54
	11	4	0.00	11.73	-7.45	13.19	72.99	96.46
		5	0.00	-8.55	6.61	-11.54	-59.49	-76.98
	12	4	0.00	11.73	-7.45	13.19	72.99	96.46
		5	0.00	-8.55	6.61	-11.54	-59.49	-76.98
	13	4	0.00	16.30	-10.35	20.16	101.37	133.97
		5	0.00	-11.88	9.18	-17.88	-82.62	-106.92
5	1	5	0.00	11.88	0.00	0.00	0.00	106.92
		6	0.00	0.00	0.00	0.00	0.00	0.00
	2	5	0.00	0.00	0.00	0.00	0.00	0.00
		6	0.00	0.00	0.00	0.00	0.00	0.00
	3	5	0.00	0.00	0.00	0.00	0.00	0.00
		6	0.00	0.00	0.00	0.00	0.00	0.00
	4	5	0.00	0.00	-9.18	0.00	82.62	0.00
		6	0.00	0.00	0.00	0.00	0.00	0.00
	5	5	0.00	0.00	0.00	0.00	0.00	0.00
		6	0.00	0.00	0.00	0.00	0.00	0.00
	6	5	0.00	0.00	0.00	0.00	0.00	0.00
		6	0.00	0.00	0.00	0.00	0.00	0.00
	7	5	0.00	11.88	-9.18	0.00	82.62	106.92
		6	0.00	0.00	0.00	0.00	0.00	0.00
	8	5	0.00	9.50	-7.34	0.00	66.10	85.54
		6	0.00	0.00	0.00	0.00	0.00	0.00
	9	5	0.00	9.50	-7.34	0.00	66.10	85.54
		6	0.00	0.00	0.00	0.00	0.00	0.00
	10	5	0.00	9.50	-7.34	0.00	66.10	85.54
		6	0.00	0.00	0.00	0.00	0.00	0.00
	11	5	0.00	8.55	-6.61	0.00	59.49	76.98
		6	0.00	0.00	0.00	0.00	0.00	0.00
	12	5	0.00	8.55	-6.61	0.00	59.49	76.98
		6	0.00	0.00	0.00	0.00	0.00	0.00
	13	5	0.00	11.88	-9.18	0.00	82.62	106.92
		6	0.00	0.00	0.00	0.00	0.00	0.00
6	1 DL	3	46.19	2.25	0.00	0.00	-27.80	25.39
		7	-58.58	-2.25	0.00	0.00	27.80	12.25
	2 2DL7	3	-15.15	0.00	0.00	0.00	0.00	0.00
		7	15.15	0.00	0.00	0.00	0.00	0.00
	3 LL	3	10.72	0.00	0.00	0.00	0.00	0.00
		7	-10.72	0.00	0.00	0.00	0.00	0.00

MEMBER END FORCES STRUCTURE TYPE = SPACE

ALL UNITS ARE -- KIP FEET

MEMBER	LOAD	JT	AXIAL	SHEAR-Y	SHEAR-Z	TORSION	MOM-Y	MOM-Z
	4 Earth	3	0.00	0.00	14.26	-3.97	0.02	0.00
		7	0.00	0.00	-14.26	3.97	-238.76	0.00
	5 W	3	-14.36	4.50	0.00	0.00	0.00	35.81
		7	14.36	-4.50	0.00	0.00	0.00	39.52
	6 RST	3	0.00	0.00	1.23	0.00	1.85	0.00
		7	0.00	0.00	-1.23	0.00	-22.44	0.00
	7	3	56.91	2.25	14.26	-3.97	-27.78	25.39
		7	-69.30	-2.25	-14.26	3.97	-210.97	12.25
	8	3	25.47	5.40	11.41	-3.18	-22.23	48.96
		7	-35.38	-5.40	-11.41	3.18	-168.77	41.42
	9	3	42.08	2.88	11.41	-3.18	-22.23	28.90
		7	-51.99	-2.88	-11.41	3.18	-168.77	19.29
	10	3	45.53	1.80	12.39	-3.18	-20.75	20.31
		7	-55.44	-1.80	-12.39	3.18	-186.73	9.80
	11	3	22.92	4.86	11.15	-2.86	-18.67	44.06
		7	-31.84	-4.86	-11.15	2.86	-168.05	37.28
	12	3	37.82	2.61	11.15	-2.86	-18.67	26.16
		7	-46.74	-2.61	-11.15	2.86	-168.05	17.52
	13	3	31.04	2.25	14.26	-3.97	-27.78	25.39
		7	-43.43	-2.25	-14.26	3.97	-210.97	12.25
7	1	4	46.21	-2.25	0.00	0.00	-27.80	-25.39
		8	-58.60	2.25	0.00	0.00	27.80	-12.25
	2	4	-15.15	0.00	0.00	0.00	0.00	0.00
		8	15.15	0.00	0.00	0.00	0.00	0.00
	3	4	10.72	0.00	0.00	0.00	0.00	0.00
		8	-10.72	0.00	0.00	0.00	0.00	0.00
	4	4	0.00	0.00	14.27	3.99	-0.02	0.00
		8	0.00	0.00	-14.27	-3.99	-238.81	0.00
	5	4	8.06	4.50	0.00	0.00	0.00	35.81
		8	-8.06	-4.50	0.00	0.00	0.00	39.52
	6	4	0.00	0.00	1.23	0.00	1.85	0.00
		8	0.00	0.00	-1.23	0.00	-22.44	0.00
	7	4	56.93	-2.25	14.27	3.99	-27.82	-25.39
		8	-69.32	2.25	-14.27	-3.99	-211.01	-12.25
	8	4	43.42	1.80	11.41	3.19	-22.25	8.34
		8	-53.33	-1.80	-11.41	-3.19	-168.81	21.81
	9	4	47.48	-0.72	11.41	3.19	-22.25	-11.72
		8	-57.39	0.72	-11.41	-3.19	-168.81	-0.32
	10	4	45.54	-1.80	12.40	3.19	-20.77	-20.31
		8	-55.45	1.80	-12.40	-3.19	-186.76	-9.80
	11	4	39.07	1.62	11.16	2.87	-18.70	7.50
		8	-47.99	-1.62	-11.16	-2.87	-168.08	19.63
	12	4	42.76	-0.63	11.16	2.87	-18.70	-10.40
		8	-51.68	0.63	-11.16	-2.87	-168.08	-0.13
	13	4	31.06	-2.25	14.27	3.99	-27.82	-25.39
		8	-43.45	2.25	-14.27	-3.99	-211.01	-12.25

********** END OF LATEST ANALYSIS RESULT **********

75. PRINT FORCE ENVELOPE NSECTION 10 LIST 1 TO 7

MEMBER FORCE ENVELOPE

ALL UNITS ARE KIP FEET

MEMB	DISTANCE		FY	LD	MZ	LD	FZ	LD	MY	LD
1	0.00	MAX.	0.00	2	0.00	2	0.00	1	0.00	13
		MIN.	0.00	1	0.00	7	0.00	4	0.00	5
	1.80	MAX.	0.00	2	1.07	13	0.92	13	0.83	13
		MIN.	-1.19	13	0.00	5	0.00	6	0.00	5
	3.60	MAX.	0.00	2	4.28	13	1.84	13	3.30	13
		MIN.	-2.38	13	0.00	5	0.00	6	0.00	5
	5.40	MAX.	0.00	2	9.62	13	2.75	13	7.44	13
		MIN.	-3.56	13	0.00	3	0.00	6	0.00	5
	7.20	MAX.	0.00	2	17.11	13	3.67	13	13.22	13
		MIN.	-4.75	13	0.00	2	0.00	6	0.00	5
	9.00	MAX.	0.00	2	26.73	13	4.59	13	20.66	13
		MIN.	-5.94	13	0.00	2	0.00	6	0.00	5
	10.80	MAX.	0.00	2	38.49	13	5.51	13	29.74	13
		MIN.	-7.13	13	0.00	2	0.00	6	0.00	5
	12.60	MAX.	0.00	2	52.39	13	6.43	13	40.48	13
		MIN.	-8.32	13	0.00	2	0.00	6	0.00	6
	14.40	MAX.	0.00	2	68.43	13	7.34	13	52.88	13
		MIN.	-9.50	13	0.00	2	0.00	6	0.00	6
	16.20	MAX.	0.00	2	86.61	13	8.26	13	66.92	13
		MIN.	-10.69	13	0.00	2	0.00	6	0.00	6
	18.00	MAX.	0.00	2	106.92	13	9.18	13	82.62	13
		MIN.	-11.88	13	0.00	2	0.00	6	0.00	6

MAX/MIN FORCES FOR MEMBER 1,AMONGST ALL SECT LOCATIONS

	FY/ FZ	DIST DIST	LD LD	MZ/ MY	DIST DIST	LD LD	FX	DIST	LD
MAX.	0.00	0.00	2	106.92	18.00	1			
	9.18	18.00	4	82.62	18.00	4	0.00	0.00	1
MIN.	-11.88	18.00	13	0.00	0.00	7			
	0.00	0.00	4	0.00	18.00	6	0.00	18.00	13

2	0.00	MAX.	0.00	6	106.92	13	9.18	13	82.62	13
		MIN.	-11.88	13	0.00	3	0.00	1	0.00	6
	0.19	MAX.	0.00	6	109.24	13	9.30	13	84.39	13
		MIN.	-12.32	13	0.00	3	0.00	1	0.00	6
	0.38	MAX.	0.00	6	111.64	13	9.41	13	86.18	13
		MIN.	-12.76	13	0.00	3	0.00	1	0.00	1
	0.58	MAX.	0.00	6	114.13	13	9.53	13	88.00	13
		MIN.	-13.20	13	0.00	3	0.00	1	0.00	1

	0.77	MAX.	0.00	6	116.70	13	9.65	13	89.84	13
		MIN.	-13.64	13	0.00	3	0.00	1	0.00	1
	0.96	MAX.	0.00	6	119.36	13	9.76	13	91.70	13
		MIN.	-14.08	13	0.00	3	0.00	1	0.00	1
	1.15	MAX.	0.00	6	122.10	13	9.88	13	93.58	13
		MIN.	-14.53	13	0.00	3	0.00	1	0.00	1
	1.34	MAX.	0.00	6	124.93	13	10.00	13	95.49	13
		MIN.	-14.97	13	0.00	3	0.00	1	0.00	1
	1.53	MAX.	0.00	6	127.84	13	10.12	13	97.41	13
		MIN.	-15.41	13	0.00	3	0.00	1	0.00	1
	1.73	MAX.	0.00	6	130.84	13	10.23	13	99.36	13
		MIN.	-15.85	13	0.00	3	0.00	1	0.00	1
	1.92	MAX.	0.00	6	133.92	13	10.35	13	101.34	13
		MIN.	-16.29	13	0.00	2	0.00	1	0.00	6

MAX/MIN FORCES FOR MEMBER 2,AMONGST ALL SECT LOCATIONS

	FY/ FZ	DIST DIST	LD LD	MZ/ MY	DIST DIST	LD LD	FX	DIST	LD
MAX.	0.00	0.00	4	133.92	1.92	1			
	10.35	1.92	4	101.34	1.92	4	0.00 C	0.00	5
MIN.	-16.29	1.92	13	0.00	0.00	3			
	0.00	1.92	1	0.00	1.73	1	0.00 T	1.92	13

3	0.00	MAX.	14.75	13	108.53	13	0.00	1	97.36	4
		MIN.	-5.58	5	-35.81	5	-3.91	4	0.00	1
	1.28	MAX.	11.80	13	91.49	13	0.00	1	92.85	4
		MIN.	-5.58	5	-28.65	5	-3.13	4	0.00	1
	2.57	MAX.	8.85	13	78.24	13	0.00	1	89.33	4
		MIN.	-5.58	5	-21.49	5	-2.35	4	0.00	1
	3.85	MAX.	5.90	13	68.77	13	0.00	1	86.82	4
		MIN.	-5.58	5	-14.32	5	-1.56	4	0.00	1
	5.13	MAX.	2.95	13	63.09	13	0.00	1	85.32	4
		MIN.	-5.58	5	-7.16	5	-0.78	4	0.00	1
	6.42	MAX.	0.00	2	61.21	13	0.00	13	84.81	13
		MIN.	-5.58	5	0.00	5	0.00	5	0.00	6
	7.70	MAX.	0.00	2	63.11	13	0.78	13	85.32	13
		MIN.	-6.83	8	0.00	3	0.00	5	0.00	6
	8.98	MAX.	0.00	2	68.79	13	1.57	13	86.83	13
		MIN.	-9.19	8	0.00	3	0.00	5	0.00	6
	10.27	MAX.	0.00	2	79.80	8	2.35	13	89.34	13
		MIN.	-11.55	8	0.00	3	0.00	5	0.00	6
	11.55	MAX.	0.00	2	96.14	8	3.13	13	92.86	13
		MIN.	-13.91	8	0.00	3	0.00	5	0.00	6
	12.83	MAX.	0.00	2	115.51	8	3.92	13	97.38	13
		MIN.	-16.27	8	0.00	3	0.00	5	0.00	6

MAX/MIN FORCES FOR MEMBER 3,AMONGST ALL SECT LOCATIONS

	FY/ FZ	DIST DIST	LD LD	MZ/ MY	DIST DIST	LD LD	FX	DIST	LD
MAX.	14.75	0.00	1	115.51	12.83	8			
	3.92	12.83	7	97.38	12.83	7	0.00 C	0.00	5
MIN.	-16.27	12.83	8	-35.81	0.00	5			
	-3.91	0.00	4	0.00	0.00	1	2.25 T	12.83	13

4	0.00	MAX.	16.30	13	133.97	13	0.00	1	101.37	13
		MIN.	0.00	5	0.00	5	-10.35	13	0.00	6
	0.19	MAX.	15.85	13	130.88	13	0.00	1	99.39	13
		MIN.	0.00	5	0.00	5	-10.23	13	0.00	6
	0.38	MAX.	15.41	13	127.88	13	0.00	1	97.44	13
		MIN.	0.00	5	0.00	5	-10.12	13	0.00	5
	0.58	MAX.	14.97	13	124.96	13	0.00	1	95.51	13
		MIN.	0.00	5	0.00	5	-10.00	13	0.00	5
	0.77	MAX.	14.53	13	122.13	13	0.00	1	93.60	13
		MIN.	0.00	5	0.00	2	-9.88	13	0.00	5
	0.96	MAX.	14.09	13	119.38	13	0.00	1	91.71	13
		MIN.	0.00	5	0.00	2	-9.77	13	0.00	5
	1.15	MAX.	13.65	13	116.72	13	0.00	1	89.85	13
		MIN.	0.00	5	0.00	2	-9.65	13	0.00	5
	1.34	MAX.	13.20	13	114.14	13	0.00	1	88.01	13
		MIN.	0.00	5	0.00	2	-9.53	13	0.00	5
	1.54	MAX.	12.76	13	111.65	13	0.00	1	86.19	13
		MIN.	0.00	5	0.00	2	-9.41	13	0.00	5
	1.73	MAX.	12.32	13	109.24	13	0.00	1	84.39	13
		MIN.	0.00	5	0.00	2	-9.30	13	0.00	5
	1.92	MAX.	11.88	13	106.92	13	0.00	1	82.62	13
		MIN.	0.00	5	0.00	3	-9.18	13	0.00	1

MAX/MIN FORCES FOR MEMBER 4,AMONGST ALL SECT LOCATIONS

	FY/ FZ	DIST DIST	LD LD	MZ/ MY	DIST DIST	LD LD	FX	DIST	LD
MAX.	16.30	0.00	1	133.97	0.00	1			
	0.00	0.00	1	101.37	0.00	4	0.00 C	0.00	2
MIN.	0.00	1.92	5	0.00	0.00	5			
	-10.35	0.00	13	0.00	0.00	6	0.00 T	1.92	7

5	0.00	MAX.	11.88	13	106.92	13	0.00	5	82.62	13
		MIN.	0.00	6	0.00	6	-9.18	13	0.00	6
	1.80	MAX.	10.69	13	86.61	13	0.00	5	66.92	13
		MIN.	0.00	6	0.00	6	-8.26	13	0.00	6
	3.60	MAX.	9.50	13	68.43	13	0.00	5	52.88	13
		MIN.	0.00	6	0.00	6	-7.34	13	0.00	6

5.40	MAX.	8.32	13	52.39	13	0.00	5	40.48	13
	MIN.	0.00	6	0.00	5	-6.43	13	0.00	6
7.20	MAX.	7.13	13	38.49	13	0.00	5	29.74	13
	MIN.	0.00	6	0.00	5	-5.51	13	0.00	6
9.00	MAX.	5.94	13	26.73	13	0.00	5	20.66	13
	MIN.	0.00	6	0.00	5	-4.59	13	0.00	6
10.80	MAX.	4.75	13	17.11	13	0.00	5	13.22	13
	MIN.	0.00	6	0.00	5	-3.67	13	0.00	6
12.60	MAX.	3.56	13	9.62	13	0.00	5	7.44	13
	MIN.	0.00	6	0.00	5	-2.75	13	0.00	6
14.40	MAX.	2.38	13	4.28	13	0.00	5	3.30	13
	MIN.	0.00	6	0.00	5	-1.84	13	0.00	6
16.20	MAX.	1.19	13	1.07	13	0.00	5	0.83	13
	MIN.	0.00	6	0.00	5	-0.92	13	0.00	6
18.00	MAX.	0.00	5	0.00	6	0.00	5	0.00	4
	MIN.	0.00	6	0.00	5	0.00	6	0.00	1

MAX/MIN FORCES FOR MEMBER 5,AMONGST ALL SECT LOCATIONS

	FY/ FZ	DIST DIST	LD LD	MZ/ MY	DIST DIST	LD LD	FX	DIST	LD
MAX.	11.88	0.00	1	106.92	0.00	1			
	0.00	0.00	2	82.62	0.00	4	0.00	0.00	4
MIN.	0.00	18.00	6	0.00	16.20	5			
	-9.18	0.00	13	0.00	16.20	6	0.00 T	18.00	13

6	0.00	MAX.	5.40	8	48.96	8	14.26	4	1.85	6
		MIN.	0.00	3	0.00	3	0.00	1	-27.80	1
	1.67	MAX.	5.40	8	39.92	8	14.26	4	23.89	4
		MIN.	0.00	3	0.00	3	0.00	1	-27.80	1
	3.35	MAX.	5.40	8	30.88	8	14.26	4	47.77	4
		MIN.	0.00	3	0.00	3	0.00	1	-27.80	1
	5.02	MAX.	5.40	8	21.84	8	14.26	4	71.64	4
		MIN.	0.00	3	0.00	3	0.00	1	-27.80	1
	6.70	MAX.	5.40	8	12.81	8	14.26	4	95.52	4
		MIN.	0.00	3	0.00	3	0.00	1	-27.80	1
	8.37	MAX.	5.40	8	6.57	13	14.26	4	119.39	4
		MIN.	0.00	3	-1.85	5	0.00	1	-27.80	1
	10.04	MAX.	5.40	8	2.80	13	14.26	4	143.27	4
		MIN.	0.00	3	-9.39	5	0.00	1	-27.80	1
	11.72	MAX.	5.40	8	0.00	2	14.26	4	167.14	4
		MIN.	0.00	3	-16.92	5	0.00	1	-27.80	1
	13.39	MAX.	5.40	8	0.00	3	14.26	4	191.02	4
		MIN.	0.00	3	-24.45	5	0.00	1	-27.80	1
	15.07	MAX.	5.40	8	0.00	3	14.26	4	214.89	4
		MIN.	0.00	3	-32.38	8	0.00	1	-27.80	1
	16.74	MAX.	5.40	8	0.00	3	14.26	4	238.76	4
		MIN.	0.00	3	-41.42	8	0.00	1	-27.80	1

MAX/MIN FORCES FOR MEMBER 6,AMONGST ALL SECT LOCATIONS

	FY/ FZ	DIST DIST	LD LD	MZ/ MY	DIST DIST	LD LD	FX	DIST	LD
MAX.	5.40	0.00	8	48.96	0.00	8			
	14.26	0.00	4	238.76	16.74	4	69.30 C	16.74	7
MIN.	0.00	16.74	3	-41.42	16.74	8			
	0.00	16.74	1	-27.80	16.74	1	15.15 T	16.74	2

7	0.00	MAX.	4.50	5	35.81	5	14.27	13	1.85	6
		MIN.	-2.25	13	-25.39	13	0.00	5	-27.82	13
	1.67	MAX.	4.50	5	28.28	5	14.27	13	23.87	4
		MIN.	-2.25	13	-21.62	13	0.00	5	-27.80	1
	3.35	MAX.	4.50	5	20.75	5	14.27	13	47.75	4
		MIN.	-2.25	13	-17.86	13	0.00	5	-27.80	1
	5.02	MAX.	4.50	5	13.21	5	14.27	13	71.63	4
		MIN.	-2.25	13	-14.10	13	0.00	5	-27.80	1
	6.70	MAX.	4.50	5	5.68	5	14.27	13	95.51	4
		MIN.	-2.25	13	-10.33	13	0.00	5	-27.80	1
	8.37	MAX.	4.50	5	0.00	3	14.27	13	119.39	4
		MIN.	-2.25	13	-6.74	8	0.00	5	-27.80	1
	10.04	MAX.	4.50	5	0.00	3	14.27	13	143.28	4
		MIN.	-2.25	13	-9.75	8	0.00	5	-27.80	1
	11.72	MAX.	4.50	5	0.96	13	14.27	13	167.16	4
		MIN.	-2.25	13	-16.92	5	0.00	5	-27.80	1
	13.39	MAX.	4.50	5	4.72	13	14.27	13	191.04	4
		MIN.	-2.25	13	-24.45	5	0.00	5	-27.80	1
	15.07	MAX.	4.50	5	8.49	13	14.27	13	214.92	4
		MIN.	-2.25	13	-31.99	5	0.00	5	-27.80	1
	16.74	MAX.	4.50	5	12.25	13	14.27	13	238.81	4
		MIN.	-2.25	13	-39.52	5	0.00	5	-27.80	1

MAX/MIN FORCES FOR MEMBER 7,AMONGST ALL SECT LOCATIONS

	FY/ FZ	DIST DIST	LD LD	MZ/ MY	DIST DIST	LD LD	FX	DIST	LD
MAX.	4.50	0.00	5	35.81	0.00	5			
	14.27	0.00	7	238.81	16.74	4	69.32 C	16.74	7
MIN.	-2.25	16.74	13	-39.52	16.74	5			
	0.00	16.74	5	-27.82	0.00	13	15.15 T	16.74	2

********** END OF FORCE ENVELOPE FROM INTERNAL STORAGE **********

76. FINISH

```
*********** END OF THE STAAD.Pro RUN ***********

  **** DATE= JUL  3,2002   TIME= 16: 4:50 ****

**********************************************************
*     For questions on STAAD.Pro, please contact :       *
*  By Email - North America  : support@ca.reiusa.com     *
*  By Email - International  : support@reiusa.com        *
*  Tel. (USA) : 714-974-2500 ; Fax (USA) : 714-974-4771 *
**********************************************************
```

INPUT VERIFICATION ONLY DPC 6/02

83rd Ped-A.lpo

Licensed to: Sergio Oliden

DMJM+HARRIS

PROGRAM LPILE plus Version 3.0
(C) COPYRIGHT 1997 ENSOFT, INC.
ALL RIGHTS RESERVED

BHOC 83RD Ave Ped Bridge 24" Dia. Shafts at Abutments (18ft wingwalls)

UNITS--ENGLISH UNITS

I N P U T I N F O R M A T I O N

THE LOADING IS STATIC

PILE GEOMETRY AND PROPERTIES

PILE LENGTH = 360.00 IN (30 ft)
2 POINTS

X	DIAMETER	MOMENT OF INERTIA	AREA	MODULUS OF ELASTICITY
IN	IN	IN**4	IN**2	LBS/IN**2
.00	30.000	.398E+05	.707E+03	.320E+07
360.00	30.000	.398E+05	.707E+03	.320E+07

SOILS INFORMATION

X AT THE GROUND SURFACE = 36.00 IN

SLOPE ANGLE AT THE GROUND SURFACE = .00 DEG.

2 LAYER(S) OF SOIL

LAYER 1
THE SOIL IS A STIFF CLAY WITH NO FREE WATER
X AT THE TOP OF THE LAYER = 36.00 IN
X AT THE BOTTOM OF THE LAYER = 447.00 IN
MODULUS OF SUBGRADE REACTION = .500E+03 LBS/IN**3

LAYER 2
THE SOIL IS A SAND - P-Y CRITERIA BY REESE ET AL, 1974
X AT THE TOP OF THE LAYER = 447.00 IN

```
X AT THE BOTTOM OF THE LAYER      =    1000.00 IN
MODULUS OF SUBGRADE REACTION      =   .200E+03 LBS/IN**3


DISTRIBUTION OF EFFECTIVE UNIT WEIGHT WITH DEPTH
                    4 POINTS
            X,IN     WEIGHT,LBS/IN**3
             .00        .64E-01
          447.00        .64E-01
          447.00        .69E-01
         1000.00        .69E-01

DISTRIBUTION OF STRENGTH PARAMETERS WITH DEPTH
                    4 POINTS
            X,IN       C,LBS/IN**2     PHI,DEGREES     E50
             .00       .208E+01           .000       .700E-02
          447.00       .208E+01           .000       .700E-02
          447.00       .000E+00       .300E+02       -----
         1000.00       .000E+00       .300E+02       -----


BOUNDARY AND LOADING CONDITIONS
-------------------------------


LOADING NUMBER   1

BOUNDARY-CONDITION CODE                =          1
LATERAL LOAD AT THE PILE HEAD          =   .143E+05 LBS     MEMBER 6
MOMENT AT THE PILE HEAD                =   .333E+06 IN-LBS  Jt 3
AXIAL LOAD AT THE PILE HEAD            =   .310E+05 LBS     LC # 13

LOADING NUMBER   2

BOUNDARY-CONDITION CODE                =          1
LATERAL LOAD AT THE PILE HEAD          =   .114E+05 LBS     MEMBER 6
MOMENT AT THE PILE HEAD                =   .267E+06 IN-LBS  Jt 3
AXIAL LOAD AT THE PILE HEAD            =   .255E+05 LBS     LC # 8

FINITE-DIFFERENCE PARAMETERS
NUMBER OF PILE INCREMENTS                                  =        60
DEFLECTION TOLERANCE ON DETERMINATION OF CLOSURE           =   .100E-11 IN
MAXIMUM NUMBER OF ITERATIONS ALLOWED FOR PILE ANALYSIS     =       100
MAXIMUM ALLOWABLE DEFLECTION                               =    .16E+03 IN


OUTPUT CODES
KOUTPT =  1
KPYOP  =  1
INC    =  1


     DEPTH      DIAM        C         CAVG    GAMMA AVG      E50
       IN        IN     LBS/IN**2 LBS/IN**3 LBS/IN**3
     210.00    30.000    .21E+01   .24E+01    .75E-01     .700E-02
                            Y                    P
                           IN                  LBS/IN
                         .000E+00            .000E+00
                         .840E-04            .316E+02
                         .420E-03            .473E+02
```

.840E-03	.562E+02
.420E-02	.841E+02
.840E-02	.100E+03
.420E-01	.150E+03
.840E-01	.178E+03
.210E+00	.224E+03
.420E+00	.266E+03
.630E+00	.294E+03
.840E+00	.316E+03
.210E+01	.398E+03
.420E+01	.473E+03
.840E+01	.562E+03
.945E+01	.562E+03
.105E+02	.562E+03

DEPTH IN	DIAM IN	C LBS/IN**2	CAVG LBS/IN**3	GAMMA AVG LBS/IN**3	E50
222.00	30.000	.21E+01	.24E+01	.74E-01	.700E-02

Y IN	P LBS/IN
.000E+00	.000E+00
.840E-04	.316E+02
.420E-03	.473E+02
.840E-03	.562E+02
.420E-02	.841E+02
.840E-02	.100E+03
.420E-01	.150E+03
.840E-01	.178E+03
.210E+00	.224E+03
.420E+00	.266E+03
.630E+00	.294E+03
.840E+00	.316E+03
.210E+01	.398E+03
.420E+01	.473E+03
.840E+01	.562E+03
.945E+01	.562E+03
.105E+02	.562E+03

DEPTH IN	DIAM IN	C LBS/IN**2	CAVG LBS/IN**3	GAMMA AVG LBS/IN**3	E50
234.00	30.000	.21E+01	.24E+01	.74E-01	.700E-02

Y IN	P LBS/IN
.000E+00	.000E+00
.840E-04	.316E+02
.420E-03	.473E+02
.840E-03	.562E+02
.420E-02	.841E+02
.840E-02	.100E+03
.420E-01	.150E+03
.840E-01	.178E+03
.210E+00	.224E+03
.420E+00	.266E+03
.630E+00	.294E+03
.840E+00	.316E+03
.210E+01	.398E+03
.420E+01	.473E+03
.840E+01	.562E+03
.945E+01	.562E+03
.105E+02	.562E+03

DEPTH IN	DIAM IN	C LBS/IN**2	CAVG LBS/IN**3	GAMMA AVG LBS/IN**3	E50
270.00	30.000	.21E+01	.24E+01	.72E-01	.700E-02

Y IN	P LBS/IN
.000E+00	.000E+00
.840E-04	.316E+02
.420E-03	.473E+02
.840E-03	.562E+02
.420E-02	.841E+02
.840E-02	.100E+03
.420E-01	.150E+03
.840E-01	.178E+03
.210E+00	.224E+03
.420E+00	.266E+03
.630E+00	.294E+03
.840E+00	.316E+03
.210E+01	.398E+03
.420E+01	.473E+03
.840E+01	.562E+03
.945E+01	.562E+03
.105E+02	.562E+03

DEPTH IN	DIAM IN	C LBS/IN**2	CAVG LBS/IN**3	GAMMA AVG LBS/IN**3	E50
330.00	30.000	.21E+01	.23E+01	.71E-01	.700E-02

Y IN	P LBS/IN
.000E+00	.000E+00
.840E-04	.316E+02
.420E-03	.473E+02
.840E-03	.562E+02
.420E-02	.841E+02
.840E-02	.100E+03
.420E-01	.150E+03
.840E-01	.178E+03
.210E+00	.224E+03
.420E+00	.266E+03
.630E+00	.294E+03
.840E+00	.316E+03
.210E+01	.398E+03
.420E+01	.473E+03
.840E+01	.562E+03
.945E+01	.562E+03
.105E+02	.562E+03

O U T P U T I N F O R M A T I O N

```
**********************************

*************************************************
* COMPUTE LOAD-DISTRIBUTION AND LOAD-DEFLECTION *
* CURVES FOR LATERAL LOADING                    *
*************************************************
```

LOADING NUMBER 1

BOUNDARY CONDITION CODE = 1
LATERAL LOAD AT THE PILE HEAD = .143E+05 LBS
MOMENT AT THE PILE HEAD = .333E+06 IN-LBS
AXIAL LOAD AT THE PILE HEAD = .310E+05 LBS

X IN	DEFLECTION IN	MOMENT LBS-IN	SHEAR LBS	SLOPE RAD.	TOTAL STRESS LBS/IN**2	FLEXURAL RIGIDITY LBS-IN**2	SOIL REACTION LBS/IN
*****	*********	*********	*********	*********	*********	*********	*********
.0	.240E+00	.333E+06	.143E+05	-.198E-02	.170E+03	.127E+12	.000E+00
6.0	.229E+00	.419E+06	.143E+05	-.197E-02	.202E+03	.127E+12	.000E+00
12.0	.217E+00	.505E+06	.143E+05	-.194E-02	.235E+03	.127E+12	.000E+00
18.0	.205E+00	.591E+06	.143E+05	-.192E-02	.267E+03	.127E+12	.000E+00
24.0	.194E+00	.677E+06	.143E+05	-.189E-02	.299E+03	.127E+12	.000E+00
30.0	.183E+00	.763E+06	.143E+05	-.185E-02	.332E+03	.127E+12	.000E+00
36.0	.172E+00	.849E+06	.140E+05	-.182E-02	.364E+03	.127E+12	-.709E+02
42.0	.161E+00	.932E+06	.132E+05	-.177E-02	.396E+03	.127E+12	-.209E+03
48.0	.150E+00	.101E+07	.120E+05	-.173E-02	.424E+03	.127E+12	-.206E+03
54.0	.140E+00	.108E+07	.107E+05	-.168E-02	.450E+03	.127E+12	-.202E+03
60.0	.130E+00	.114E+07	.954E+04	-.163E-02	.473E+03	.127E+12	-.198E+03
66.0	.120E+00	.119E+07	.836E+04	-.157E-02	.493E+03	.127E+12	-.195E+03
72.0	.111E+00	.124E+07	.720E+04	-.151E-02	.511E+03	.127E+12	-.191E+03
78.0	.102E+00	.128E+07	.607E+04	-.146E-02	.526E+03	.127E+12	-.187E+03
84.0	.938E-01	.131E+07	.496E+04	-.139E-02	.539E+03	.127E+12	-.183E+03
90.0	.856E-01	.134E+07	.388E+04	-.133E-02	.549E+03	.127E+12	-.179E+03
96.0	.778E-01	.136E+07	.282E+04	-.127E-02	.557E+03	.127E+12	-.174E+03
102.0	.704E-01	.137E+07	.178E+04	-.120E-02	.562E+03	.127E+12	-.170E+03
108.0	.633E-01	.138E+07	.776E+03	-.114E-02	.565E+03	.127E+12	-.166E+03
114.0	.567E-01	.138E+07	-.205E+03	-.107E-02	.565E+03	.127E+12	-.161E+03
120.0	.504E-01	.138E+07	-.116E+04	-.101E-02	.564E+03	.127E+12	-.157E+03
126.0	.446E-01	.137E+07	-.208E+04	-.944E-03	.560E+03	.127E+12	-.152E+03
132.0	.391E-01	.135E+07	-.298E+04	-.880E-03	.555E+03	.127E+12	-.147E+03
138.0	.340E-01	.133E+07	-.385E+04	-.816E-03	.547E+03	.127E+12	-.142E+03
144.0	.293E-01	.131E+07	-.468E+04	-.754E-03	.537E+03	.127E+12	-.137E+03
150.0	.250E-01	.128E+07	-.549E+04	-.693E-03	.526E+03	.127E+12	-.131E+03
156.0	.210E-01	.124E+07	-.626E+04	-.634E-03	.513E+03	.127E+12	-.126E+03
162.0	.174E-01	.120E+07	-.699E+04	-.576E-03	.498E+03	.127E+12	-.120E+03
168.0	.141E-01	.116E+07	-.769E+04	-.520E-03	.481E+03	.127E+12	-.114E+03
174.0	.111E-01	.111E+07	-.836E+04	-.467E-03	.463E+03	.127E+12	-.107E+03
180.0	.848E-02	.106E+07	-.898E+04	-.416E-03	.443E+03	.127E+12	-.100E+03
186.0	.613E-02	.100E+07	-.956E+04	-.367E-03	.422E+03	.127E+12	-.924E+02
192.0	.407E-02	.944E+06	-.101E+05	-.321E-03	.400E+03	.127E+12	-.834E+02
198.0	.228E-02	.882E+06	-.106E+05	-.278E-03	.377E+03	.127E+12	-.722E+02
204.0	.732E-03	.818E+06	-.109E+05	-.238E-03	.352E+03	.127E+12	-.543E+02
210.0	-.581E-03	.751E+06	-.109E+05	-.201E-03	.327E+03	.127E+12	.513E+02
216.0	-.168E-02	.686E+06	-.106E+05	-.167E-03	.303E+03	.127E+12	.669E+02
222.0	-.259E-02	.624E+06	-.102E+05	-.136E-03	.279E+03	.127E+12	.745E+02
228.0	-.332E-02	.564E+06	-.970E+04	-.108E-03	.257E+03	.127E+12	.793E+02
234.0	-.389E-02	.508E+06	-.922E+04	-.830E-04	.235E+03	.127E+12	.825E+02
240.0	-.431E-02	.454E+06	-.871E+04	-.604E-04	.215E+03	.127E+12	.847E+02
246.0	-.461E-02	.403E+06	-.820E+04	-.402E-04	.196E+03	.127E+12	.861E+02
252.0	-.480E-02	.355E+06	-.768E+04	-.223E-04	.178E+03	.127E+12	.869E+02
258.0	-.488E-02	.311E+06	-.716E+04	-.656E-05	.161E+03	.127E+12	.873E+02
264.0	-.488E-02	.270E+06	-.664E+04	.712E-05	.146E+03	.127E+12	.873E+02
270.0	-.479E-02	.231E+06	-.611E+04	.189E-04	.131E+03	.127E+12	.869E+02
276.0	-.465E-02	.196E+06	-.559E+04	.290E-04	.118E+03	.127E+12	.863E+02
282.0	-.445E-02	.164E+06	-.508E+04	.375E-04	.106E+03	.127E+12	.853E+02

288.0	-.420E-02	.135E+06	-.457E+04	.446E-04	.949E+02	.127E+12	.841E+02
294.0	-.391E-02	.109E+06	-.407E+04	.503E-04	.851E+02	.127E+12	.826E+02
300.0	-.359E-02	.863E+05	-.358E+04	.549E-04	.765E+02	.127E+12	.809E+02
306.0	-.325E-02	.663E+05	-.310E+04	.585E-04	.689E+02	.127E+12	.789E+02
312.0	-.289E-02	.491E+05	-.264E+04	.613E-04	.624E+02	.127E+12	.766E+02
318.0	-.252E-02	.346E+05	-.218E+04	.632E-04	.570E+02	.127E+12	.740E+02
324.0	-.213E-02	.228E+05	-.175E+04	.646E-04	.525E+02	.127E+12	.710E+02
330.0	-.174E-02	.136E+05	-.133E+04	.654E-04	.490E+02	.127E+12	.675E+02
336.0	-.135E-02	.682E+04	-.941E+03	.659E-04	.465E+02	.127E+12	.633E+02
342.0	-.951E-03	.230E+04	-.577E+03	.661E-04	.448E+02	.127E+12	.580E+02
348.0	-.554E-03	-.124E+03	-.251E+03	.662E-04	.440E+02	.127E+12	.507E+02
354.0	-.157E-03	-.728E+03	.124E+02	.662E-04	.442E+02	.127E+12	.370E+02
360.0	.240E-03	.000E+00	.000E+00	.662E-04	.439E+02	.127E+12	-.411E+02

OUTPUT VERIFICATION

THE MAXIMUM MOMENT IMBALANCE FOR ANY ELEMENT = .175E-06 IN-LBS
THE MAX. LATERAL FORCE IMBALANCE FOR ANY ELEMENT = -.358E-07 LBS

OUTPUT SUMMARY

PILE-HEAD DEFLECTION = .240E+00 IN
COMPUTED SLOPE AT PILE HEAD = -.198E-02
MAXIMUM BENDING MOMENT = .138E+07 LBS-IN = 115.0 K-ft
MAXIMUM SHEAR FORCE = .143E+05 LBS = 14.3 K
NO. OF ITERATIONS = 84
NO. OF ZERO DEFLECTION POINTS = 2

USED IN RECO
FOR EARTH
PLUS M = 22.
FOR RST.

LOADING NUMBER 2

BOUNDARY CONDITION CODE = 1
LATERAL LOAD AT THE PILE HEAD = .114E+05 LBS
MOMENT AT THE PILE HEAD = .267E+06 IN-LBS
AXIAL LOAD AT THE PILE HEAD = .255E+05 LBS

X IN	DEFLECTION IN	MOMENT LBS-IN	SHEAR LBS	SLOPE RAD.	TOTAL STRESS LBS/IN**2	FLEXURAL RIGIDITY LBS-IN**2	SOIL REACTION LBS/IN
.0	.158E+00	.267E+06	.114E+05	-.141E-02	.137E+03	.127E+12	.000E+00
6.0	.150E+00	.335E+06	.114E+05	-.140E-02	.163E+03	.127E+12	.000E+00
12.0	.141E+00	.404E+06	.114E+05	-.138E-02	.188E+03	.127E+12	.000E+00
18.0	.133E+00	.473E+06	.114E+05	-.136E-02	.214E+03	.127E+12	.000E+00
24.0	.125E+00	.541E+06	.114E+05	-.133E-02	.240E+03	.127E+12	.000E+00
30.0	.117E+00	.610E+06	.114E+05	-.131E-02	.266E+03	.127E+12	.000E+00
36.0	.109E+00	.679E+06	.112E+05	-.128E-02	.292E+03	.127E+12	-.633E+02
42.0	.102E+00	.745E+06	.105E+05	-.124E-02	.317E+03	.127E+12	-.187E+03
48.0	.946E-01	.805E+06	.936E+04	-.121E-02	.340E+03	.127E+12	-.183E+03
54.0	.874E-01	.858E+06	.827E+04	-.117E-02	.360E+03	.127E+12	-.180E+03
60.0	.806E-01	.904E+06	.720E+04	-.113E-02	.377E+03	.127E+12	-.176E+03
66.0	.739E-01	.945E+06	.616E+04	-.108E-02	.392E+03	.127E+12	-.172E+03
72.0	.676E-01	.979E+06	.514E+04	-.104E-02	.405E+03	.127E+12	-.168E+03
78.0	.615E-01	.101E+07	.414E+04	-.989E-03	.416E+03	.127E+12	-.165E+03
84.0	.557E-01	.103E+07	.316E+04	-.941E-03	.424E+03	.127E+12	-.161E+03

90.0	.502E-01	.104E+07	.221E+04	-.892E-03	.430E+03	.127E+12	-.156E+03
96.0	.450E-01	.106E+07	.129E+04	-.843E-03	.434E+03	.127E+12	-.152E+03
102.0	.401E-01	.106E+07	.388E+03	-.793E-03	.436E+03	.127E+12	-.148E+03
108.0	.355E-01	.106E+07	-.486E+03	-.743E-03	.436E+03	.127E+12	-.143E+03
114.0	.312E-01	.105E+07	-.133E+04	-.693E-03	.434E+03	.127E+12	-.139E+03
120.0	.272E-01	.104E+07	-.215E+04	-.644E-03	.430E+03	.127E+12	-.134E+03
126.0	.235E-01	.103E+07	-.294E+04	-.595E-03	.424E+03	.127E+12	-.129E+03
132.0	.200E-01	.101E+07	-.370E+04	-.547E-03	.417E+03	.127E+12	-.124E+03
138.0	.169E-01	.985E+06	-.443E+04	-.500E-03	.408E+03	.127E+12	-.119E+03
144.0	.140E-01	.956E+06	-.513E+04	-.454E-03	.397E+03	.127E+12	-.114E+03
150.0	.115E-01	.924E+06	-.580E+04	-.410E-03	.384E+03	.127E+12	-.108E+03
156.0	.913E-02	.887E+06	-.643E+04	-.367E-03	.371E+03	.127E+12	-.102E+03
162.0	.705E-02	.847E+06	-.702E+04	-.326E-03	.355E+03	.127E+12	-.957E+02
168.0	.522E-02	.803E+06	-.757E+04	-.287E-03	.339E+03	.127E+12	-.888E+02
174.0	.361E-02	.756E+06	-.808E+04	-.250E-03	.321E+03	.127E+12	-.810E+02
180.0	.221E-02	.706E+06	-.854E+04	-.216E-03	.302E+03	.127E+12	-.716E+02
186.0	.102E-02	.653E+06	-.893E+04	-.184E-03	.283E+03	.127E+12	-.590E+02
192.0	.499E-05	.599E+06	-.916E+04	-.154E-03	.262E+03	.127E+12	-.156E+02
198.0	-.836E-03	.544E+06	-.904E+04	-.127E-03	.241E+03	.127E+12	.562E+02
204.0	-.152E-02	.490E+06	-.867E+04	-.103E-03	.221E+03	.127E+12	.653E+02
210.0	-.207E-02	.440E+06	-.826E+04	-.811E-04	.202E+03	.127E+12	.705E+02
216.0	-.250E-02	.391E+06	-.783E+04	-.615E-04	.184E+03	.127E+12	.738E+02
222.0	-.281E-02	.346E+06	-.738E+04	-.441E-04	.166E+03	.127E+12	.761E+02
228.0	-.303E-02	.303E+06	-.692E+04	-.288E-04	.150E+03	.127E+12	.775E+02
234.0	-.316E-02	.263E+06	-.645E+04	-.155E-04	.135E+03	.127E+12	.783E+02
240.0	-.321E-02	.225E+06	-.598E+04	-.398E-05	.121E+03	.127E+12	.786E+02
246.0	-.320E-02	.191E+06	-.551E+04	.583E-05	.108E+03	.127E+12	.786E+02
252.0	-.314E-02	.159E+06	-.504E+04	.141E-04	.961E+02	.127E+12	.782E+02
258.0	-.303E-02	.130E+06	-.457E+04	.209E-04	.852E+02	.127E+12	.775E+02
264.0	-.289E-02	.104E+06	-.411E+04	.264E-04	.754E+02	.127E+12	.766E+02
270.0	-.272E-02	.810E+05	-.365E+04	.308E-04	.666E+02	.127E+12	.754E+02
276.0	-.252E-02	.604E+05	-.321E+04	.341E-04	.588E+02	.127E+12	.740E+02
282.0	-.231E-02	.425E+05	-.277E+04	.366E-04	.521E+02	.127E+12	.724E+02
288.0	-.208E-02	.272E+05	-.234E+04	.382E-04	.463E+02	.127E+12	.706E+02
294.0	-.185E-02	.144E+05	-.192E+04	.392E-04	.415E+02	.127E+12	.685E+02
300.0	-.161E-02	.413E+04	-.152E+04	.396E-04	.376E+02	.127E+12	.662E+02
306.0	-.137E-02	-.378E+04	-.113E+04	.396E-04	.375E+02	.127E+12	.636E+02
312.0	-.114E-02	-.940E+04	-.754E+03	.393E-04	.396E+02	.127E+12	.607E+02
318.0	-.902E-03	-.128E+05	-.400E+03	.388E-04	.409E+02	.127E+12	.572E+02
324.0	-.671E-03	-.142E+05	-.692E+02	.382E-04	.414E+02	.127E+12	.532E+02
330.0	-.444E-03	-.137E+05	.234E+03	.375E-04	.412E+02	.127E+12	.480E+02
336.0	-.221E-03	-.114E+05	.499E+03	.369E-04	.403E+02	.127E+12	.403E+02
342.0	-.115E-05	-.771E+04	.652E+03	.365E-04	.389E+02	.127E+12	.108E+02
348.0	.216E-03	-.360E+04	.564E+03	.362E-04	.374E+02	.127E+12	-.401E+02
354.0	.433E-03	-.944E+03	.301E+03	.361E-04	.364E+02	.127E+12	-.477E+02
360.0	.649E-03	.000E+00	.000E+00	.361E-04	.360E+02	.127E+12	-.527E+02

OUTPUT VERIFICATION

THE MAXIMUM MOMENT IMBALANCE FOR ANY ELEMENT = -.360E-06 IN-LBS
THE MAX. LATERAL FORCE IMBALANCE FOR ANY ELEMENT = .499E-07 LBS

OUTPUT SUMMARY

PILE-HEAD DEFLECTION = .158E+00 IN
COMPUTED SLOPE AT PILE HEAD = -.141E-02
MAXIMUM BENDING MOMENT = .106E+07 LBS-IN = 88.3 K-ft
MAXIMUM SHEAR FORCE = .114E+05 LBS = 11.4 K
NO. OF ITERATIONS = 70
NO. OF ZERO DEFLECTION POINTS = 2

S U M M A R Y T A B L E
****

BOUNDARY CONDITION BC1	BOUNDARY CONDITION BC2	AXIAL LOAD LBS	PILE HEAD DEFLECTION IN	MAX. MOMENT IN-LBS	MAX. SHEAR LBS
.1426E+05	.3334E+06	.3104E+05	.2404E+00	.1383E+07	.1426E+05
.1141E+05	.2668E+06	.2547E+05	.1582E+00	.1061E+07	.1141E+05

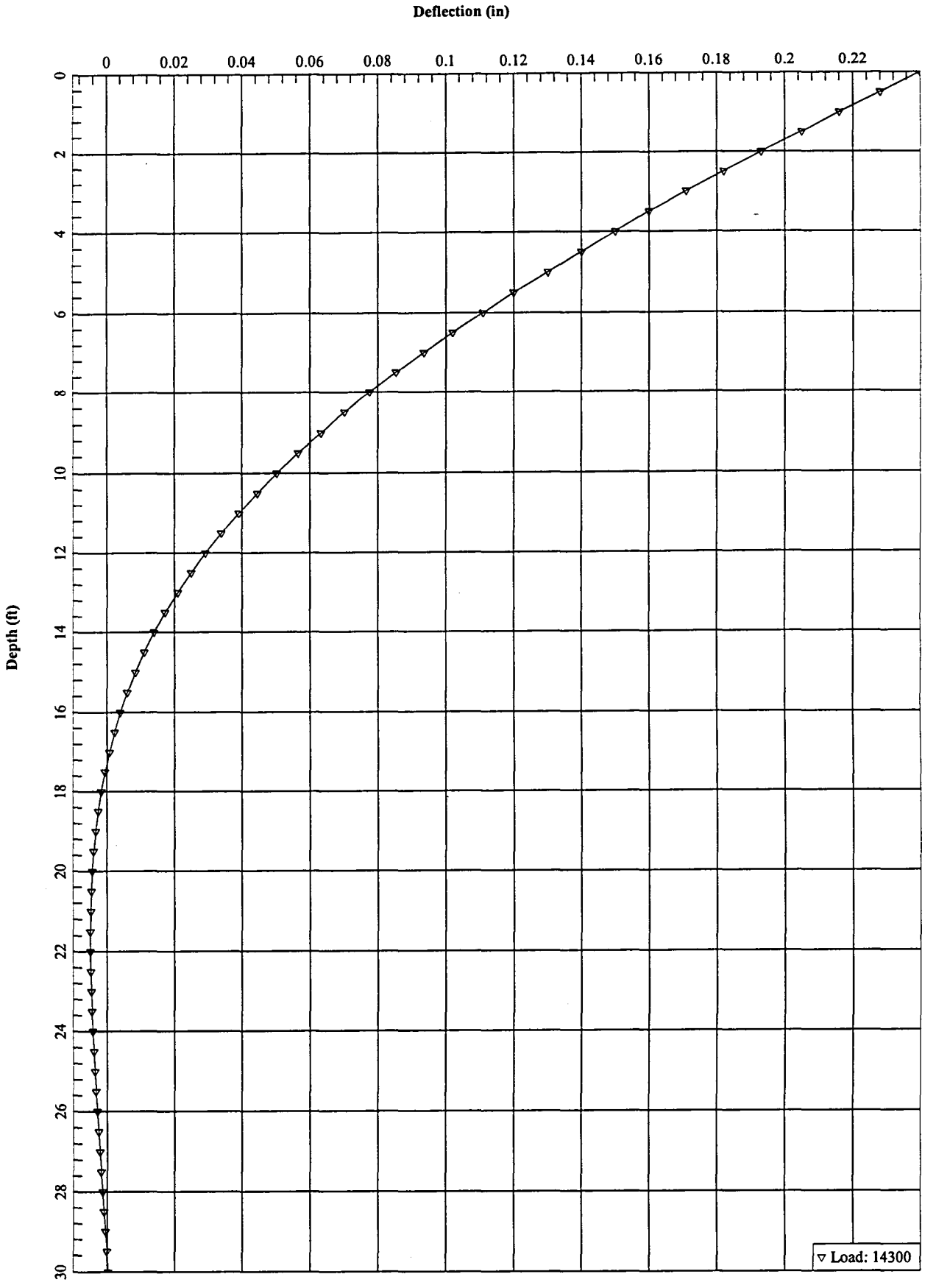
Deflection (in)
0
0.02
0.04
0.06
0.08
0.1
0.12
0.14
0.16
0.18
0.2
0.22
Depth (ft)
0
2
4
6
8
10
12
14
16
18
20
22
24
26
28
30
Load: 14300

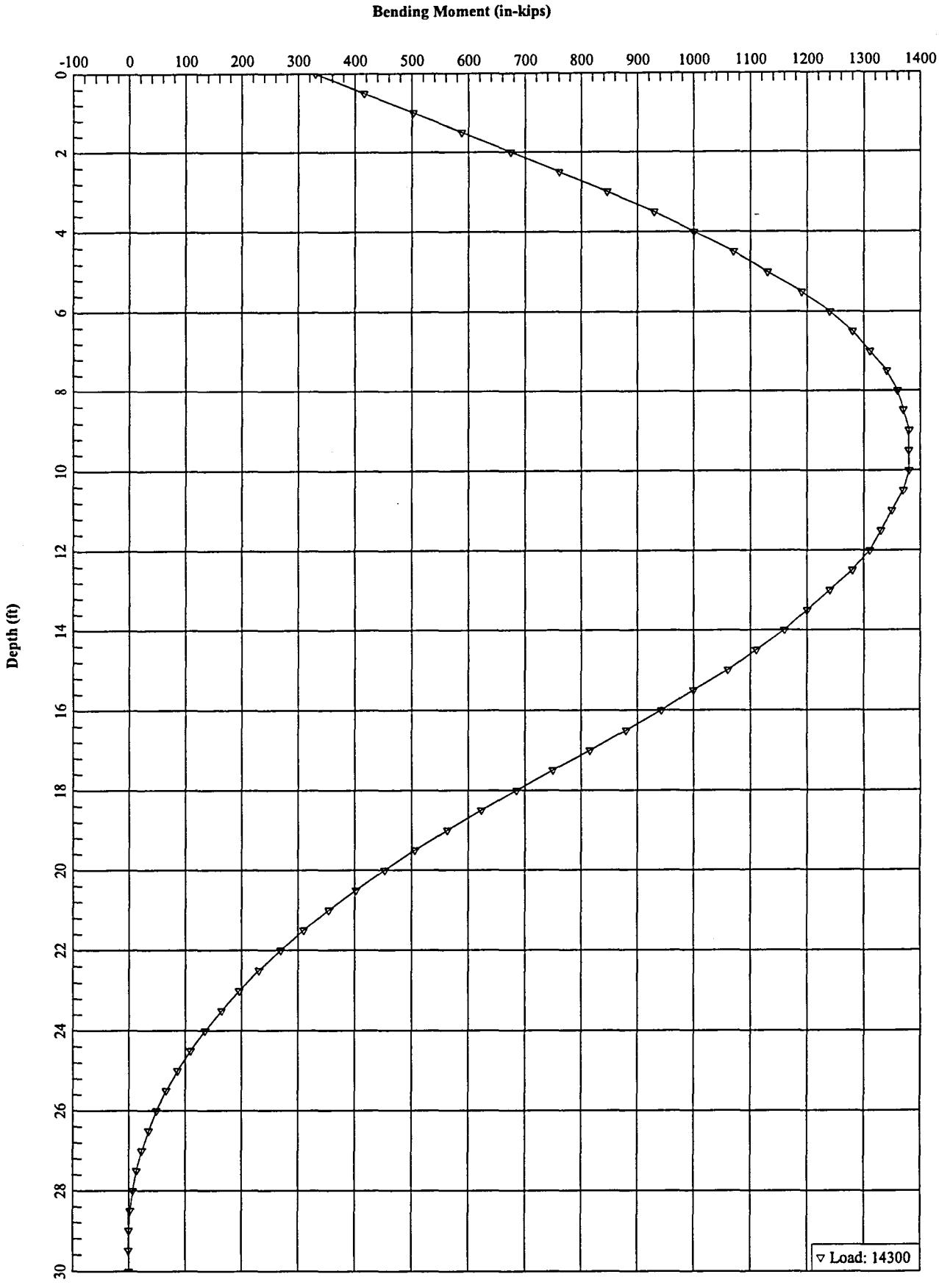
Bending Moment (in-kips)
-100
0
100
200
300
400
500
600
700
800
900
1000
1100
1200
1300
1400
Depth (ft)
0
2
4
6
8
10
12
14
16
18
20
22
24
26
28
30
Load: 14300

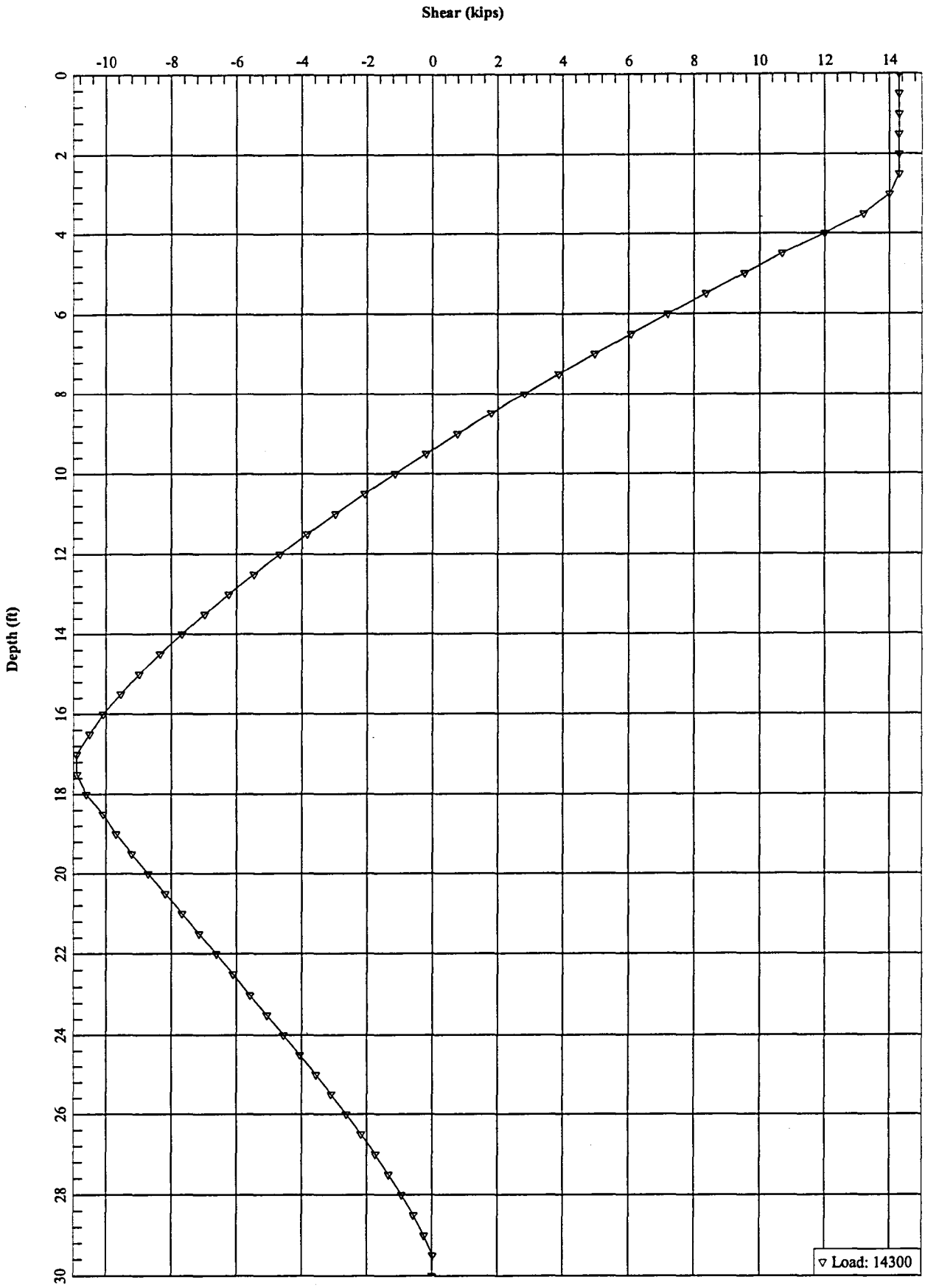
Shear (kips)
-10
-8
-6
-4
-2
0
2
4
6
8
10
12
14
Depth (ft)
0
2
4
6
8
10
12
14
16
18
20
22
24
26
28
30
Load: 14300

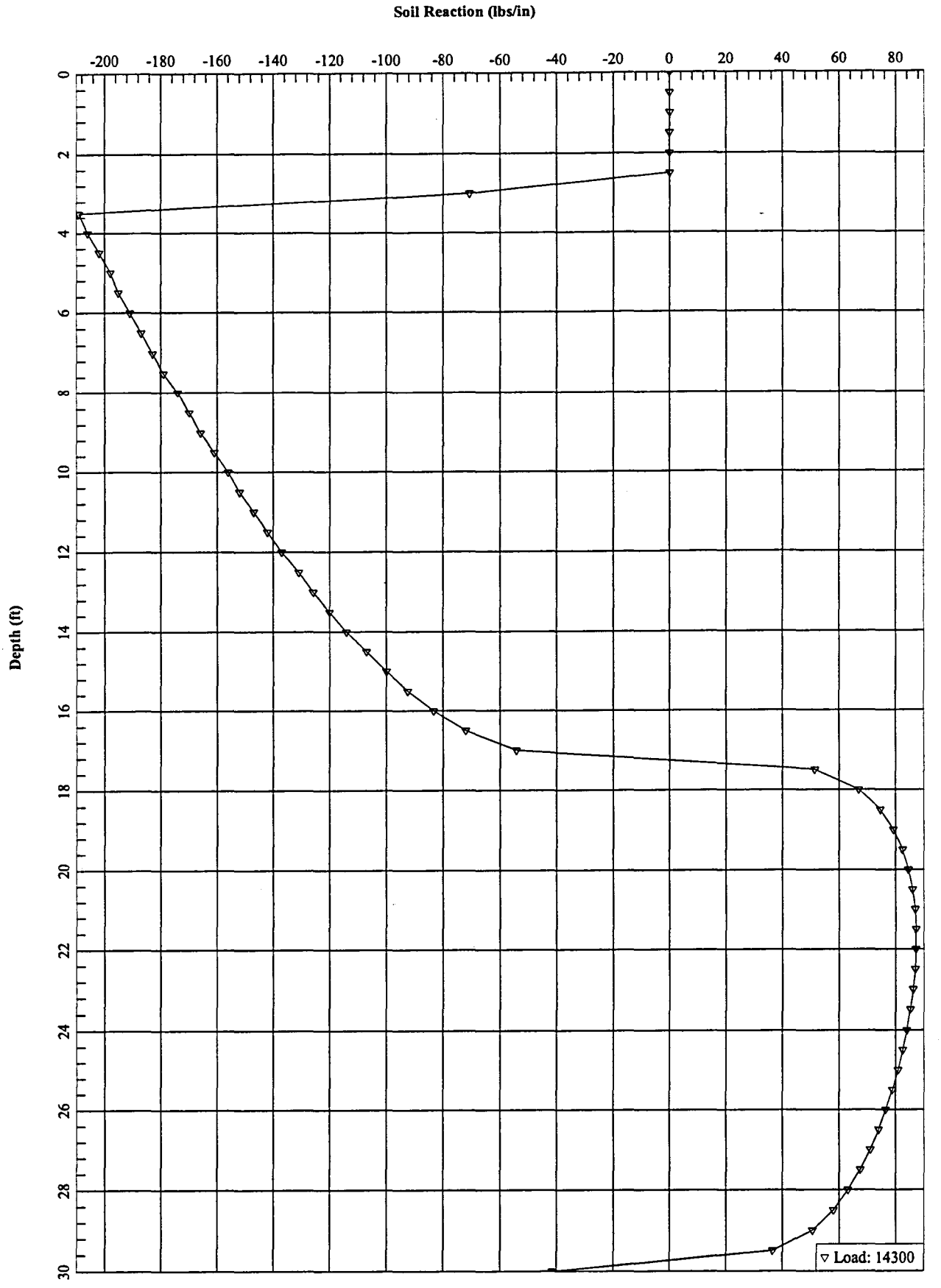
Soil Reaction (lbs/in)
-200
-180
-160
-140
-120
-100
-80
-60
-40
-20
0
20
40
60
80
Depth (ft)
0
2
4
6
8
10
12
14
16
18
20
22
24
26
28
30
Load: 14300

depth= 0 - 447; Stiff clay w/o free water

unit wt.= 0.0637
Ø= 0; c= 2.083

depth= 447 - 1000; Sand

unit wt.= 0.0694
Ø= 30; c= 0)83

INPUT VERIFICATION ONLY
DPC 6/02

```
*************************************************************************
*                              IAI-RECOL                                *
*                       Reinforced Column Design                        *
*                                                                       *
*                                                                       *
*                   By: Imbsen and Associates, Inc.                     *
*                     Version 3.3.1     12-OCT-99                       *
*************************************************************************
```

********** Licensed to: DMJM - Phoenix, AZ **********

Project Title:83rd ped bridge

```
COLUMN TYPE                    =  9  (CIRCULAR)
CONCRETE LOOPS                 =  1
TOTAL NO. OF CONCRETE COORD.   = 40
STEEL REBAR PATTERN            =  4  (CONCENTRIC LOOPS)
NUMBER OF STEEL REBAR LOOPS    =  1
TOTAL NO. OF STEEL REBARS      = 12
PLOT TYPE                      =  0  (NO PLOT)
DESIGN TYPE                    =  2  (CHECK)
PERCENT STEEL LIMITS           =     (1.00 % MIN.  8.00 % MAX.)
```

```
*************
* BENT DATA *
*****************************************************************************

NUMBER OF COLUMNS IN BENT                    =     2
OUT TO OUT DISTANCE (DIAMETER) OF SPIRAL     = 24.00 INCHES
DISTANCE FROM TOP COLUMN PLASTIC HINGE TO
CENTER OF GRAVITY OF THE SUPERSTRUCTURE      =  2.25 FEET
CENTER TO CENTER SPACING OF COLUMNS          = 12.83 FEET
```

```
******************************
* MATERIAL PROPERTIES  (PSI) *
*****************************************************************************

ULTIMATE CONCRETE COMPRESSIVE STRESS - FC =     4000.
YOUNG'S MODULUS FOR CONCRETE         - EC =  3604997.
YOUNG'S MODULUS FOR STEEL BARS       - ES = 29000000.
ULTIMATE CONCRETE COMPRESSIVE STRAIN - EO =      .003
YIELDING STRESS FOR STEEL BARS       - FY =    60000.
```

Project Title:83rd ped bridge

CIRCULAR CROSS-SECTION

HX(IN)
30.00

CONCRETE COORDINATES (INCHES)

COORD	X	Y
1	15.00	0.00
2	14.82	2.35
3	14.27	4.64
4	13.37	6.81
5	12.14	8.82
6	10.61	10.61
7	8.82	12.14
8	6.81	13.37
9	4.64	14.27
10	2.35	14.82
11	0.00	15.00
12	-2.35	14.82
13	-4.64	14.27
14	-6.81	13.37
15	-8.82	12.14
16	-10.61	10.61
17	-12.14	8.82
18	-13.37	6.81
19	-14.27	4.64
20	-14.82	2.35
21	-15.00	0.00
22	-14.82	-2.35
23	-14.27	-4.64
24	-13.37	-6.81
25	-12.14	-8.82
26	-10.61	-10.61
27	-8.82	-12.14
28	-6.81	-13.37
29	-4.64	-14.27
30	-2.35	-14.82
31	0.00	-15.00
32	2.35	-14.82
33	4.64	-14.27
34	6.81	-13.37
35	8.82	-12.14
36	10.61	-10.61
37	12.14	-8.82
38	13.37	-6.81
39	14.27	-4.64
40	14.82	-2.35

Project Title:83rd ped bridge

CONCENTRIC CIRCLE PATTERN

LOOP	RADIUS (IN)	AREA (IN**2)	BARS
1	11.06	0.60	12

STEEL REBAR COORDINATES (INCHES)

COORD	X	Y
1	11.06	0.00
2	9.58	5.53
3	5.53	9.58
4	0.00	11.06
5	-5.53	9.58
6	-9.58	5.53
7	-11.06	0.00
8	-9.58	-5.53
9	-5.53	-9.58
10	0.00	-11.06
11	5.53	-9.58
12	9.58	-5.53

THE MAIN LONGITUDINAL STEEL IS ASSUMED TO BE # 7 BARS.

***WARNING: THE CONCRETE COVER IS GREATER THAN 2 INCHES IN THE X-DIRECTION

***WARNING: THE CONCRETE COVER IS GREATER THAN 2 INCHES IN THE Y-DIRECTION

```
*************************
* INITIAL REFERENCE DATA *
*************************************************************************

TOTAL AREA OF THE SECTION                AG =      4.89 FT**2
NOMINAL AXIAL LOAD STRENGTH              PO =   2800.97 KIPS
TOTAL REINFORCEMENT AREA                AST =      7.20 IN**2
PERCENT STEEL                             =      1.02 %

GROSS MOMENT OF INERTIA ABOUT Y-AXIS   IYC =      1.90 FT**4
GROSS MOMENT OF INERTIA ABOUT X-AXIS   IXC =      1.90 FT**4

STEEL MOMENT OF INERTIA ABOUT Y-AXIS   IYS =    0.0212 FT**4
STEEL MOMENT OF INERTIA ABOUT X-AXIS   IXS =    0.0212 FT**4
```

Project Title:83rd ped bridge

```
**********************************
* COLUMN LOAD DATA (KIP, KIP-FT) *
**********************************
```

LOAD NAME: Abut loading - Top of DS
FOOTING DATA FILE: NO
TYPE FOOTING:

SEISMIC ANALYSIS SPECIFICATIONS:

DESIGN CRITERIA (SDC)	PERFORMANCE CATEGORY (SPC)
CAL	

MOMENT DISTRIBUTION FACT :---TOP---:		:---BOTTOM---:		PERCENT IMPACT	COLUMN LENGTH (FEET)	STEEL TIE=1 SPIRAL=0	LOCATION TOP=1 BOTTOM=0	DUCTILITY FACTOR (Z)
DAY	DAX	DBY	DBX					
0.99	0.99	0.00	0.00	30.00	16.74	0	1	5.00

COLUMN GROUP LOADS - SERVICE (KIP, KIP-FT)

				:---- LL+IMPACT ---: CASE 1 MY-MAX	CASE 2 MX-MAX	CASE 3 N-MAX						SF&
	DEAD LOAD	PRE STRESS	TRANS		LONG	AXIAL	WIND	WL	LF	CF-MY	TEMP	BY
MY	25.	0.		0.	0.	0.	35.	0.	0.	0.	0.	0.
MX	27.	0.		0.	0.	0.	0.	0.	0.	0.	22.	115.
P	31.	0.		0.	0.	10.	-14.	0.	0.	0.	0.	0.
PMY				0.	0.	0.				0.		
PMX				0.	0.	0.				0.		
P				0.	0.	0.				0.		

COLUMN SEISMIC AND ARBITRARY LOADS (KIP, KIP-FT)

(ARS)	UNREDUCED SEISMIC CASE 1 MAX TRAN	CASE 2 MAX LONG	ARBITRARY LOADS SERVICE AL1	SERVICE AL2	ARBITRARY LOADS FACTORED AL1	FACTORED AL2
MY TRAN	0.	0.	0.	0.	0.	0.
MX LONG	0.	0.	0.	0.	0.	0.
P AXIAL	0.	0.	0.	0.	0.	0.

```
*******************************************************
* FACTORED LOADS FOR COLUMN DESIGN CHECK (KIP, KIP-FT) *
*************************************************************************
```

APPLIED FACTORED MOMENTS ARE MAGNIFIED FOR SLENDERNESS IN ACCORDANCE WITH CALTRANS BRIDGE DESIGN SPECIFICATIONS. (ART 8.16.5)

LENGTH = 16.740 FT FC = 4.00 KSI FY = 60.00 KSI
STEEL = 1.02 % AST = 7.20 SQ IN

GROUP	CASE	:------ APPLIED FACTORED ------: TRANS MY	LONG MX	COMB M	AXIAL P	CAPACITY (PHI*MN) MU	PHI	RATIO MU/M	
IH	1	25.	178.	180.	30.	377.	0.88	2.10	OK
IH	2	25.	178.	180.	30.	377.	0.88	2.10	OK
IH	3	34.	189.	193.	64.	395.	0.87	2.05	OK
IP	1	25.	178.	180.	30.	377.	0.88	2.10	OK
IP	2	25.	178.	180.	30.	377.	0.88	2.10	OK
IP	3	34.	188.	191.	40.	383.	0.88	2.01	OK
II		72.	177.	191.	12.	367.	0.89	1.92	OK
III	1	39.	178.	182.	25.	374.	0.89	2.05	OK
III	2	39.	178.	182.	25.	374.	0.89	2.05	OK
III	3	48.	189.	195.	49.	388.	0.87	1.99	OK
IV	1	25.	207.	209.	30.	377.	0.88	1.80	OK
IV	2	25.	207.	209.	30.	377.	0.88	1.80	OK
IV	3	34.	218.	221.	54.	390.	0.87	1.76	OK
V		69.	198.	210.	11.	367.	0.89	1.75	OK
VI	1	38.	199.	203.	24.	374.	0.89	1.85	OK
VI	2	38.	199.	203.	24.	374.	0.89	1.85	OK
VI	3	46.	209.	214.	47.	387.	0.88	1.80	OK
VII	1	25.	28.	38.	31.	496.	1.18	13.16	OK
VII	2	25.	28.	38.	31.	496.	1.18	13.16	OK

NOTE: FOR CALTRANS AND SPC-C AND SPC-D ONLY THE UNREDUCED SEISMIC MOMENTS ARE REDUCED BY THE Z OR R FACTOR. FOR SPC-B BOTH THE UNREDUCED SEISMIC AXIAL AND MOMENTS ARE REDUCED BY THE Z OR R FACTOR.

```
************************************************
* MOMENT MAGNIFICATION AND BUCKLING CALCULATIONS *
**************************************************************************

REFERENCE: "CALTRANS BRIDGE DESIGN SPECIFICATIONS" (ART 8.16.5)
          (COLUMN ASSUMED TO BE UNBRACED AGAINST SIDESWAY.) -

MAGY   = MOMENT MAGNIFACTION FACTOR ABOUT Y-AXIS
MAGX   = MOMENT MAGNIFACTION FACTOR ABOUT X-AXIS

PCY    = CRITICAL BUCKLING LOAD ABOUT Y-AXIS
PCX    = CRITICAL BUCKLING LOAD ABOUT X-AXIS

KY     = EFFECTIVE LENGTH FACTOR ABOUT Y-AXIS =  2.10
KX     = EFFECTIVE LENGTH FACTOR ABOUT X-AXIS =  2.10

KY*L/R = SLENDERNESS RATIO ABOUT Y-AXIS       = 56.
KX*L/R = SLENDERNESS RATIO ABOUT X-AXIS       = 56.

IYS    = STEEL MOMENT OF INERTIA ABOUT Y-AXIS =   0.0212 FT**4
IXS    = STEEL MOMENT OF INERTIA ABOUT X-AXIS =   0.0212 FT**4
```

		MOMENT MAGNIFICATION			CRACKED TRANSFORMED SECTION		CRITICAL BUCKLING		AXIAL
GR	CA	TRAN MAGY	LONG MAGX	COMB MAG	E*IY	E*IX	TRAN PCY	LONG PCX	LOAD P
					(KIP-FT**2)	(KIP-FT**2)	(KIPS)	(KIPS)	(KIPS)
IH	1	1.016	1.009	1.009	271454.	470670.	2168.	3759.	30.
IH	2	1.016	1.009	1.009	271454.	470670.	2168.	3759.	30.
IH	3	1.035	1.021	1.021	271454.	454439.	2168.	3629.	64.
IP	1	1.016	1.009	1.009	271454.	470670.	2168.	3759.	30.
IP	2	1.016	1.009	1.009	271454.	470670.	2168.	3759.	30.
IP	3	1.022	1.013	1.013	271454.	454439.	2168.	3629.	40.
II		1.004	1.003	1.004	403002.	470670.	3219.	3759.	12.
III	1	1.011	1.007	1.008	331178.	470670.	2645.	3759.	25.
III	2	1.011	1.007	1.008	331178.	470670.	2645.	3759.	25.
III	3	1.022	1.016	1.016	318854.	454439.	2546.	3629.	49.
IV	1	1.016	1.009	1.009	271454.	479645.	2168.	3831.	30.
IV	2	1.016	1.009	1.009	271454.	479645.	2168.	3831.	30.
IV	3	1.030	1.017	1.017	271454.	464638.	2168.	3711.	54.
V		1.004	1.003	1.003	403002.	479645.	3219.	3831.	11.
VI	1	1.010	1.007	1.007	331178.	479645.	2645.	3831.	24.
VI	2	1.010	1.007	1.007	331178.	479645.	2645.	3831.	24.
VI	3	1.021	1.015	1.015	318854.	464638.	2546.	3711.	47.
VII	1	1.000	1.000	1.000	271454.	271454.	2168.	2168.	31.
VII	2	1.000	1.000	1.000	271454.	271454.	2168.	2168.	31.

Project Title:83rd ped bridge

COLUMN SERVICE LOADS (KIP, K-FT) AND MAXIMUM WORKING STRESSES (PSI)

YOUNG S MODULUS FOR CONCRETE - EC = 3604997. PSI
MODULAR RATIO (ES/EC) - N = 8.0

		:--- SERVICE LOADS (KIP, K-FT) ---:				:--- MAX STRESS (PSI) ---:		
GP	CASE	TRANS MY	LONG MX	COMB M	AXIAL P	CONC COMP	STEEL TEN	STEEL COMP
IH	1	25.	143.	145.	31.	1484.	24639.	6131.
IH	2	25.	143.	145.	31.	1484.	24639.	6131.
IH	3	25.	143.	145.	42.	1462.	22910.	6258.
II		49.	114.	124.	13.	1291.	23409.	5193.
III	1	29.	114.	118.	21.	1208.	20446.	4736.
III	2	29.	114.	118.	21.	1208.	20446.	4736.
III	3	29.	114.	118.	30.	1192.	19063.	4853.
IV	1	20.	132.	134.	25.	1374.	23360.	5654.
IV	2	20.	132.	134.	25.	1374.	23360.	5654.
IV	3	20.	132.	134.	33.	1357.	21965.	5759.
V		44.	118.	126.	12.	1311.	23838.	5125.
VI	1	26.	118.	121.	19.	1244.	21493.	4908.
VI	2	26.	118.	121.	19.	1244.	21493.	4908.
VI	3	26.	118.	121.	27.	1229.	20248.	5013.
DL		25.	28.	38.	31.	326.	2995.	1714.

****
* PROBABLE PLASTIC MOMENT (1.3 X NOMINAL MOMENT) (KIP, KIP-FT) *
****

CODE (8.16.4.4) AND MEMO TO DESIGNERS 15-10

FC = 4.00 KSI FY = 60.00 KSI
EO = 0.0030 IN/IN AST = 7.20 SQ IN

ANGLE	TRANS MPY	LONG MPX	COMB MP	AXIAL P	P-BALANCE (APPROX)
90.0	953.2	0.0	953.2	1680.4	1064.
	1033.6	0.0	1033.6	1400.3	
	1067.1	0.0	1067.1	1120.2	
	1044.8	0.0	1044.8	840.5	
	942.0	0.0	942.0	560.4	
	770.1	0.0	770.1	280.3	
	549.4	0.0	549.4	31.2	
	519.9	0.0	519.9	0.2	
	372.5	0.0	372.5	-139.8	
	208.4	0.0	208.4	-280.0	

DESIGN ASSUMPTIONS:

1. ALL COLUMNS ARE THE SAME I.E., PRISMATIC, EQUAL LENGTH, EQUAL SPACING.
2. PLASTIC HINGES FORM AT THE TOP AND BOTTOM OF THE COLUMNS.
3. THE DISTANCE BETWEEN THE PLASTIC HINGES IS TAKEN AS THE COLUMN LENGTH.
4. THE OVER-TURNING FORCE ACTS THROUGH THE C.G. OF THE SUPERSTRUCTURE AT A DISTANCE 'CGS' ABOVE THE TOP OF THE COLUMN.
5. THE COLUMNS ARE NUMBERED FROM LEFT TO RIGHT AND THE OVERTURNING FORCE ACTS TO THE RIGHT.

DETERMINATION OF COLUMN LATERAL REINFORCEMENT

NUMBER OF COLUMNS IN BENT		=	2	
OUT TO OUT DISTANCE (DIAMETER) OF LATERAL REINFORCEMENT		=	24.00	IN
DISTANCE FROM TOP COLUMN PLASTIC HINGE TO CENTER OF GRAVITY OF SUPERSTURCTURE		=	2.25	FT
CENTER TO CENTER SPACING OF COLUMNS		=	12.83	FT
COMPRESSIVE STRENGTH OF CONCRETE	- FC	=	4.00	KSI
YIELD STRENGTH OF REINFORCEMENT	- FY	=	60.00	KSI
CONCRETE GROSS AREA (2" COVER)	- AG	=	4.28	FT**2
CONCRETE CORE AREA	- AC	=	3.14	FT**2
TRANSVERSE DIRECTION	- BW	=	24.00	IN
TRANSVERSE DIRECTION	- D	=	19.20	IN
LONGITUDINAL DIRECTION	- BW	=	24.00	IN
LONGITUDINAL DIRECTION	- D	=	19.20	IN

AMOUNT OF REINFORCEMENT CONFORMS TO THE FOLLOWING BRIDGE DESIGN SPECIFICATIONS:

CASE A - CONFINEMENT REINFORCEMENT - (CODE 8.18.2.2)

```
PS1 = .45 (AG/AC - 1) FC/FY (.5 + 1.25 P/(FC * AG))
PS2 =             .12 FC/FY (.5 + 1.25 P/(FC * AG))
PS3 = .45 (AG/AC - 1) FC/FY
```

CASE B - APPLIED SHEAR REINFORCEMENT - (CODE 8.16.6)

```
VU <= PHI * VN                (8-46)
VN  = VC + VS                 (8-47)
VC  = 2 * SQRT(FC) * BW * D   (8-51)
VS  = (AV * FY * D) / S       (8-53)
```

CASE C - MINIMUM SHEAR REINFORCEMENT - (CODE 8.19.1.1)

```
AV = (50 * BW * S)/FY         (8-63)
```

****
* TRANSVERSE DIRECTION *
****

LOADS RESULTING FROM PLASTIC HINGING OF COLUMN NO. 1

TOP OF COLUMN	AXIAL FORCE	P =	19.	KIPS
	PLASTIC MOMENT	MP =	0.	K-FT
BOTTOM OF COLUMN	AXIAL FORCE	P =	32.	KIPS
	PLASTIC MOMENT	MP =	550.	K-FT

DESIGN SHEAR FORCE:	VU =	33.	KIPS
CONCRETE FACTORED SHEAR STRENGTH:	.85 * VC =	5.	KIPS
STEEL FACTORED SHEAR STRENGTH:	.85 * VS =	28.	KIPS

NOTE: THE AVERAGE COMPRESSIVE STRESS (P/AC) IS LESS THAN .10 * FC.
THEREFORE, VC IS LESS THAN 2 * SQRT(FC) * B * D (CODE 8.16.6.11.4(A))

MAXIMUM CENTER TO CENTER SPACING (PITCH) OF LATERAL REINFORCEMENT. (IN)

BAR SIZE	CASE A CONFINEMENT	CASE B APP SHEAR	CASE C MIN SHEAR	CONFINEMENT RATIO	EQUATION
4	3.005	14.212	20.000	0.01083	3
5	4.632	22.028	31.000	0.01083	3
6	6.521	31.266	44.000	0.01083	3
7	8.846	42.635	60.000	0.01083	3
8	11.582	56.136	79.000	0.01083	3

```
************************
* TRANSVERSE DIRECTION *
****************************************************************************
```

LOADS RESULTING FROM PLASTIC HINGING OF COLUMN NO. 2

TOP OF COLUMN	AXIAL FORCE	P =	43.	KIPS
	PLASTIC MOMENT	MP =	0.	K-FT
BOTTOM OF COLUMN	AXIAL FORCE	P =	55.	KIPS
	PLASTIC MOMENT	MP =	572.	K-FT

DESIGN SHEAR FORCE:	VU =	34.	KIPS
CONCRETE FACTORED SHEAR STRENGTH:	.85 * VC =	12.	KIPS
STEEL FACTORED SHEAR STRENGTH:	.85 * VS =	22.	KIPS

NOTE: THE AVERAGE COMPRESSIVE STRESS (P/AC) IS LESS THAN .10 * FC.
THEREFORE, VC IS LESS THAN 2 * SQRT(FC) * B * D (CODE 8.16.6.11.4(A))

MAXIMUM CENTER TO CENTER SPACING (PITCH) OF LATERAL REINFORCEMENT. (IN)

BAR SIZE	CASE A CONFINEMENT	CASE B APP SHEAR	CASE C MIN SHEAR	CONFINEMENT RATIO	EQUATION
4	3.005	17.455	20.000	0.01083	3
5	4.632	27.056	31.000	0.01083	3
6	6.521	38.402	44.000	0.01083	3
7	8.846	52.366	60.000	0.01083	3
8	11.582	68.949	79.000	0.01083	3

NOTE:

THE UNREDUCED ELASTIC ARS + DEAD LOAD MOMENT (25. K-FT)
IS LESS THAN THE PROBABLE PLASTIC MOMENT (572. K-FT)
THEREFORE, PLASTIC HINGING DOES NOT CONTROL.
(CODE 8.16.6.11.1)

THE DESIGNER MUST CHECK THE SHEAR REINFORCEMENT (CASE B)
FOR GROUP LOADS I TO VII
(USE UNREDUCED ELASTIC ARS + DEAD LOAD SHEAR FOR GROUP VII)

THE MAXIMUM SPACING OF LATERAL REINFORCEMENT SHALL NOT EXCEED ONE-FIFTH OF THE LEAST DIMENSION OF THE COLUMN, 6 TIMES THE NOMINAL DIAMETER OF THE LONGITUDINAL REINFORCEMENT, OR 8 INCHES. (8.21.1.1)

THE MINIMUM SPACING SHALL NOT BE LESS THAN 1.5 BAR DIAMETERS, 1.5 TIMES THE MAXIMUM SIZE COARSE AGGREGATE, OR 1.5 INCHES. (8.21.1)

FACTORED SHEAR STRENGTH .85 * (VS + VC) BASED ON MAXIMUM AND MINIMUM CENTER TO CENTER SPACING (PITCH) OF LATERAL REINFORCEMENT:

BAR SIZE	MAX PITCH (IN)	SHEAR STRENGTH (KIPS)	1.0" AGG MIN PITCH (IN)	SHEAR STRENGTH (KIPS)
4	5.250	124.	2.000	245.
5	5.250	165.	2.125	248.
6	5.250	214.	2.250	248.
7	5.250	248.	2.375	248.
8	5.250	248.	2.500	248.

NOTE:

THE ABOVE FACTORED SHEAR STRENGTH VALUES ARE BASED ON A FACTORED CONCRETE SHEAR STRENGTH (.85 * VC) OF 50. KIPS.

IF THE APPLIED AXIAL LOAD IS LESS THAN 181. KIPS, THEN THE FACTORED CONCRETE SHEAR STRENGTH DECREASES FROM 50. KIPS TO 0. KIPS AND THE VALUES IN THE ABOVE TABLE MUST BE APPROPRIATELY ADJUSTED.

IF THE DESIGNER SELECTS A LATERAL BAR SIZE DIFFERENT THAN THE ONE ASSUMED, HE SHOULD CONSIDER ADJUSTING THE RADIUS OF THE MAIN STEEL BAR LOOP AND RE-RUN THE PROBLEM.

MAXIMUM SHEAR CAPACITY OF THE SECTION:
VMAX = .85 * 10 * SQRT(FC) * B * D = 248. KIPS

```
**************************
* LONGITUDINAL DIRECTION *
******************************************************************************
```

LOADS RESULTING FROM PLASTIC HINGING OF COLUMN NO. 1

TOP OF COLUMN	AXIAL FORCE	P =	31.	KIPS
	PLASTIC MOMENT	MP =	0.	K-FT
BOTTOM OF COLUMN	AXIAL FORCE	P =	43.	KIPS
	PLASTIC MOMENT	MP =	561.	K-FT

DESIGN SHEAR FORCE:	VU =	33.	KIPS
CONCRETE FACTORED SHEAR STRENGTH:	.85 * VC =	8.	KIPS
STEEL FACTORED SHEAR STRENGTH:	.85 * VS =	25.	KIPS

NOTE: THE AVERAGE COMPRESSIVE STRESS (P/AC) IS LESS THAN .10 * FC.
THEREFORE, VC IS LESS THAN 2 * SQRT(FC) * B * D (CODE 8.16.6.11.4(A))

MAXIMUM CENTER TO CENTER SPACING (PITCH) OF LATERAL REINFORCEMENT. (IN)

BAR SIZE	CASE A CONFINEMENT	CASE B APP SHEAR	CASE C MIN SHEAR	CONFINEMENT RATIO	EQUATION
4	3.005	15.666	20.000	0.01083	3
5	4.632	24.283	31.000	0.01083	3
6	6.521	34.466	44.000	0.01083	3
7	8.846	46.999	60.000	0.01083	3
8	11.582	61.882	79.000	0.01083	3

NOTE:

THE UNREDUCED ELASTIC ARS + DEAD LOAD MOMENT (28. K-FT)
IS LESS THAN THE PROBABLE PLASTIC MOMENT (561. K-FT)
THEREFORE, PLASTIC HINGING DOES NOT CONTROL.
(CODE 8.16.6.11.1)

THE DESIGNER MUST CHECK THE SHEAR REINFORCEMENT (CASE B)
FOR GROUP LOADS I TO VII
(USE UNREDUCED ELASTIC ARS + DEAD LOAD SHEAR FOR GROUP VII)

THE MAXIMUM SPACING OF LATERAL REINFORCEMENT SHALL NOT EXCEED ONE-FIFTH OF THE LEAST DIMENSION OF THE COLUMN, 6 TIMES THE NOMINAL DIAMETER OF THE LONGITUDINAL REINFORCEMENT, OR 8 INCHES. (8.21.1.1)

THE MINIMUM SPACING SHALL NOT BE LESS THAN 1.5 BAR DIAMETERS, 1.5 TIMES THE MAXIMUM SIZE COARSE AGGREGATE, OR 1.5 INCHES. (8.21.1)

FACTORED SHEAR STRENGTH .85 * (VS + VC) BASED ON MAXIMUM AND MINIMUM CENTER TO CENTER SPACING (PITCH) OF LATERAL REINFORCEMENT:

BAR SIZE	MAX PITCH (IN)	SHEAR STRENGTH (KIPS)	1.0" AGG MIN PITCH (IN)	SHEAR STRENGTH (KIPS)
4	5.250	124.	2.000	245.
5	5.250	165.	2.125	248.
6	5.250	214.	2.250	248.
7	5.250	248.	2.375	248.
8	5.250	248.	2.500	248.

NOTE:

THE ABOVE FACTORED SHEAR STRENGTH VALUES ARE BASED ON A FACTORED CONCRETE SHEAR STRENGTH (.85 * VC) OF 50. KIPS.

IF THE APPLIED AXIAL LOAD IS LESS THAN 181. KIPS, THEN THE FACTORED CONCRETE SHEAR STRENGTH DECREASES FROM 50. KIPS TO 0. KIPS AND THE VALUES IN THE ABOVE TABLE MUST BE APPROPRIATELY ADJUSTED.

IF THE DESIGNER SELECTS A LATERAL BAR SIZE DIFFERENT THAN THE ONE ASSUMED, HE SHOULD CONSIDER ADJUSTING THE RADIUS OF THE MAIN STEEL BAR LOOP AND RE-RUN THE PROBLEM.

MAXIMUM SHEAR CAPACITY OF THE SECTION:
VMAX = .85 * 10 * SQRT(FC) * B * D = 248. KIPS

POLE FDTN
& TRAILS

GENERAL NOTES FOR LIGHTING

1. THE LOCATION OF UTILITIES, INCLUDING EXISTING ROADWAY LIGHTING FEATURES (POLES, LUMINAIRES, PULL BOXES AND CONDUIT) ARE APPROXIMATE. THE CONTRACTOR SHALL BE RESPONSIBLE FOR CONTACTING ALL UTILITIES FOR EXACT LOCATIONS PRIOR TO ANY CONSTRUCTION ACTIVITY. THE CONTRACTOR IS RESPONSIBLE FOR MAINTAINING PROPER CLEARANCES AS REQUIRED BY THE UTILITY COMPANY.
2. EACH POLE MOUNTED LUMINAIRE SHALL BE INDIVIDUALLY FUSED WITH IN-LINE, WATERPROOF CONNECTORS.
3. ALL HORIZONTAL MOUNT LUMINAIRES SHALL BE ENERGIZED FOR 100 HOURS BEFORE FINAL ACCEPTANCE. THE CONTRACTOR SHALL BE RESPONSIBLE FOR CORRECTING ANY MALFUNCTIONS FOR SIX MONTHS AFTER THE LUMINAIRES PASS A FINAL INSPECTION.
4. THE ELECTRICAL SERVICE REQUIREMENTS AND CONNECTIONS SHALL BE COORDINATED WITH S.R.P.. REPRESENTATIVE MR. GREG WILSON, (602) 236-8643.
5. THE CONTRACTOR SHALL VERIFY THE ACTUAL LOCATION OF THE ELECTRICAL SERVICE WITH THE UTILITY COMPANY PRIOR TO TRENCHING AND INSTALLING THE SERVICE PULL BOX (MAXIMUM 2 FEET FROM SERVICE POINT). THE CONTRACTOR SHALL PROVIDE A MINIMUM OF 5 FEET OF SLACK FOR EACH CONDUCTOR IN THE SERVICE PULL BOX. THE UTILITY COMPANY SHALL MAKE THIS CONNECTION AND THE CONTRACTOR SHALL COORDINATE THE WORK.
6. NEW RIGHT-OF-WAY AND EASEMENTS ARE NOT REQUIRED.
7. ALL SPLICES SHALL BE WATERPROOF. CONTRACTOR TO SUBMIT METHOD OF WATERPROOFING FOR REVIEW AND APPROVAL.

LEGEND

- 250W HPS Fixture
- 70 Watt H.I.D. Fixture, 240V
- 70 Watt H.I.D., Underpass Fxture, 240V
- ADOT No. 3½ Pull Box
- 1½" PVC Conduit
- Irrigation Controller, 120V
- New No. 5 Pull Box
- Load Center
- X = Pole Number; Y = Circuit

GENERAL NOTES FOR LIGHT POLE FOUNDATION

Construction Specification -
Maricopa Association of Governments (MAG) Uniform Specifications for Public Works Construction, 1992 Edition and Interims to Date.

Reinforcing steel shall conform to ASTM Standard A 615. All reinforcing shall be furnished as grade 60.

All concrete shall be MAG Class AA unless otherwise noted.

Drilled shaft spiral reinforcement shall be ⅜" diameter cold drawn steel wire conforming to AASHTO M-32 except that the minimum tensile strength shall be 60,000 psi.

Anchorage of spiral reinforcement shall be provided by 1½ extra turns of the spiral at the end of the spiral unit. Splices in spiral reinforcement shall be lap splices of 48 bar diameters but not less than 12 inches or shall be welded.

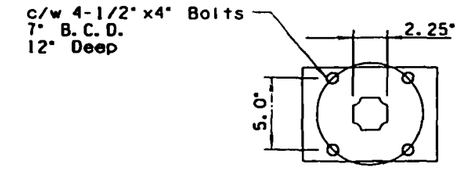

Detail A

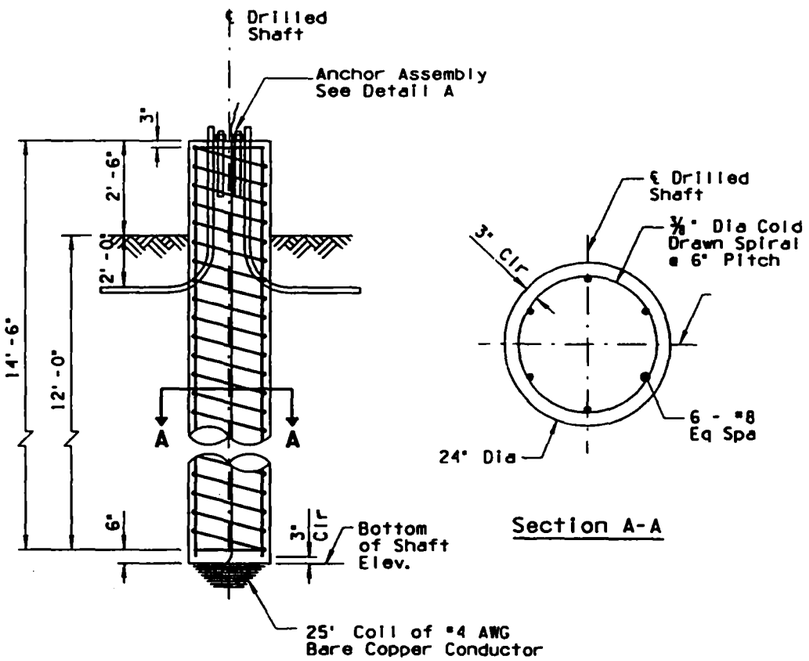

Section A-A

LIGHT POLE FOUNDATION DETAIL

NO.	REVISION	BY	DATE
3			
2			
1			

FLOOD CONTROL DISTRICT OF MARICOPA COUNTY

BETHANY HOME OUTFALL CHANNEL, PHASE II
SR 101L TO 83RD AVENUE
PCN NO. 620 03 32

PRELIMINARY 90% Review NOT FOR CONSTRUCTION OR RECORDING		BY	DATE
	DESIGNED	JJP	06/02
	DRAWN	CMJ	06/02
	CHECKED	JJP	06/02

DMJM HARRIS
2777 E. CAMELBACK ROAD SUITE 200
PHOENIX, AZ. 85016-4302 (602) 337-2777

DRAWING NO. E-1.01 | GENERAL NOTES, LEGEND & POLE DETAIL | SHEET OF

DMJM HARRIS	PROJECT: BHOC LIGHT POLES ON TRAIL	JOB NO. 6888	SHEET 1 of 4
		DESIGNED BY SEO	DATE APR 02
SUBJECT: FOUNDATION DESIGN		CHECKED BY DPC	DATE 6/02

ASSUMPTIONS

ASD, $f'_c = 4000$ psi $\quad f_s = 24{,}000$ psi

COHESIVE SOILS $\quad C = 200$ psf

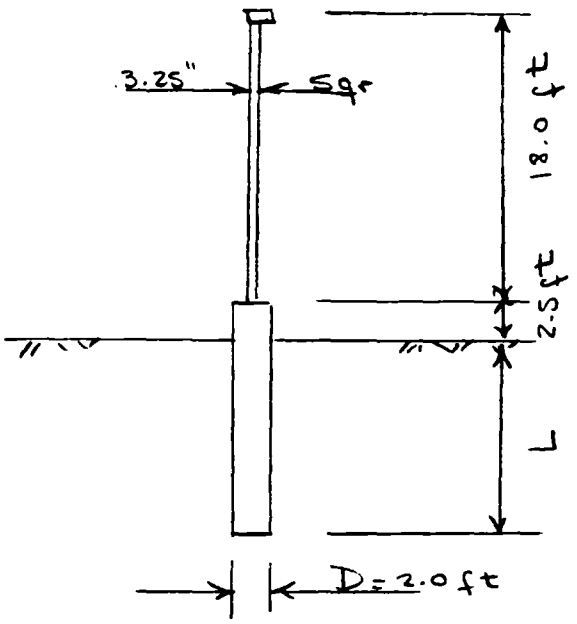

DESIGN LOADS

1) DL = 0.65 K ↓

2) WIND (Std Specs for Structural Supports for Highway Signs, Luminaires and Traffic Signals)

$$P_z = 0.00256\,(1.3\,V_{fm})^2\,C_d\,C_h \quad (\text{psf})$$

$V_{fm} = 68$ mph

$C_d = 1.25$

$C_h = 1.00$

$P_z = 25$ psf

$$V_x = (25\text{ psf})\left[(3.25''/12'')(18.0\text{ ft}) + (2.0\text{ ft})(2.5\text{ ft})\right] = 0.25\text{ K} \rightarrow$$

$$M_x = (25\text{ psf})(3.25''/12'')(18.0\text{ ft})^2(1/2) = 1.1\text{ K-ft}$$

DMJM HARRIS	PROJECT: BHOC Light Poles on Trail	JOB NO. 6888	SHEET 2 of 4
		DESIGNED BY SEO	DATE APR 02
SUBJECT: Foundation Design		CHECKED BY EPC	DATE 6/02

3) Stream Force

$V_{MAX} = 17.5$ psf , $V_{MIN} = 0.0$ Say $V_{avg} = 8.75$ psf

$V_{avg} < P_z$ ∴ Wind Force Governs

4) LL

Assume $P_{LL} = 2.0$ K

$M_{LL} = (2.0K)(2.5ft) = 5.0$ K-ft

Load Combinations I : DL + LL @ 100% V = 2.0 K, M = 5.0 K-ft

II : W @ 125% V = 0.19 K, M = 0.82 K-ft

III : DL + LL + 0.3W @ 125% V = 1.56 K, M = 4.0 K-ft

$$FS = \frac{\text{Overload Factor}}{\text{Under-capacity Factor}} = \frac{2}{0.7} = 2.86 \text{ say } 3.0$$

∴

$V_f = (2.0\ K)(3.0) = 6.00$ K

$M_f = (5.0\ K\text{-}ft)(3.0) = 15.0$ K-ft

For Cohesive Soils:

$$L = 1.5D + q\left[1 + \sqrt{2 + \frac{(4H + 6D)}{q}}\right]$$

$$H = \frac{M_F}{V_F} = \frac{15.0\ K\text{-}ft}{6.0\ K} = 2.50\ ft$$

$$q = \frac{V_F}{9cD} = \frac{6.00\ K}{(9)(0.20\ ksf)(2.0\ ft)} = 1.67\ ft$$

$L = 11.17$ ft say <u>12.0 ft</u>

DMJM HARRIS	PROJECT: BHOC LIGHT POLE ON TRAIL	JOB NO. 6888	SHEET 3 of 4
		DESIGNED BY CEO	DATE APRIL
SUBJECT: FOUNDATION DESIGN		CHECKED BY DPC	DATE 6/92

MAXIMUM MOMENT

$$M_{FMAX} = V_f \left[H + (1.5)(D) + (0.5)(q) \right]$$

$$= 6.00K \left[2.80ft + (1.5)(2.0ft) + (0.5)(1.67ft) \right]$$

$$= 38.01 \text{ K-ft}$$

LOCATED AT $(1.5)(D) + q$ BELOW GROUNDLINE:

$$(1.5)(2.0ft) + 1.67ft = 4.67 \text{ ft}$$

DMJM HARRIS	PROJECT: BHOC LIGHT POLES ON TRAIL	JOB NO. 6888	SHEET 4 of 4
		DESIGNED BY SEO	DATE APR 02
SUBJECT: FOUNDATION DESIGN		CHECKED BY DPC	DATE 6/02

AN EVALUATION OF LENGTH REQUIREMENTS FOR THE 24"DIA CS CAN BE PERFORMED WITH L-PILE. SEE L-PILE OUTPUT.

THE L-PILE RUN WAS FOR A DESIGN LENGTH OF 10.0 ft.

INPUT VERIFICATION ONLY
JPC 6/02

pole.lpo

Licensed to: Sergio Oliden

DMJM+HARRIS

PROGRAM LPILE plus Version 3.0
(C) COPYRIGHT 1997 ENSOFT, INC.
ALL RIGHTS RESERVED

BHOC Light Pole 24" Dia. Shafts

UNITS--ENGLISH UNITS

I N P U T I N F O R M A T I O N

THE LOADING IS STATIC

PILE GEOMETRY AND PROPERTIES

PILE LENGTH = 120.00 IN
2 POINTS

X	DIAMETER	MOMENT OF INERTIA	AREA	MODULUS OF ELASTICITY
IN	IN	IN**4	IN**2	LBS/IN**2
.00	24.000	.163E+05	.452E+03	.320E+07
120.00	24.000	.163E+05	.452E+03	.320E+07

SOILS INFORMATION

X AT THE GROUND SURFACE = .00 IN

SLOPE ANGLE AT THE GROUND SURFACE = .00 DEG.

2 LAYER(S) OF SOIL

LAYER 1
THE SOIL IS A STIFF CLAY WITH NO FREE WATER
X AT THE TOP OF THE LAYER = .00 IN
X AT THE BOTTOM OF THE LAYER = 150.00 IN
MODULUS OF SUBGRADE REACTION = .150E+03 LBS/IN**3

LAYER 2
THE SOIL IS A STIFF CLAY WITH WATER-INDUCED EROSION
X AT THE TOP OF THE LAYER = 150.00 IN

```
    X AT THE BOTTOM OF THE LAYER      =    1000.00 IN
    MODULUS OF SUBGRADE REACTION      =   .150E+04 LBS/IN**3


    DISTRIBUTION OF EFFECTIVE UNIT WEIGHT WITH DEPTH
                        4 POINTS
                X,IN     WEIGHT,LBS/IN**3
                 .00        .61E-01
              150.00        .61E-01
              150.00        .64E-01
             1000.00        .64E-01

    DISTRIBUTION OF STRENGTH PARAMETERS WITH DEPTH
                        4 POINTS
                X,IN       C,LBS/IN**2     PHI,DEGREES     E50
                 .00       .139E+01           .000       .150E-01
              150.00       .139E+01           .000       .150E-01
              150.00       .556E+01           .000       .650E-02
             1000.00       .556E+01           .000       .650E-02


BOUNDARY AND LOADING CONDITIONS
-------------------------------


    LOADING NUMBER   1

    BOUNDARY-CONDITION CODE                  =          1
    LATERAL LOAD AT THE PILE HEAD            =   .200E+04 LBS
    MOMENT AT THE PILE HEAD                  =   .600E+05 IN-LBS
    AXIAL LOAD AT THE PILE HEAD              =   .650E+03 LBS


FINITE-DIFFERENCE PARAMETERS
    NUMBER OF PILE INCREMENTS                                =         20
    DEFLECTION TOLERANCE ON DETERMINATION OF CLOSURE         =   .100E-11 IN
    MAXIMUM NUMBER OF ITERATIONS ALLOWED FOR PILE ANALYSIS =        100
    MAXIMUM ALLOWABLE DEFLECTION                             =    .16E+03 IN


OUTPUT CODES
    KOUTPT =  1
    KPYOP  =  1
    INC    =  1


        DEPTH      DIAM         C       CAVG    GAMMA AVG    E50
          IN        IN    LBS/IN**2  LBS/IN**2  LBS/IN**2
         246.00    24.000   .56E+01   .56E+01   .62E-01    .650E-02

        AS =.60     AC =.30     Y,IN             P,LBS/IN
                              .000E+00          .000E+00
                              .468E-01          .402E+03
                              .936E-01          .568E+03
                              .140E+00          .662E+03
                              .187E+00          .723E+03
                              .234E+00          .765E+03
                              .281E+00          .793E+03
                              .328E+00          .810E+03
                              .374E+00          .818E+03
                              .421E+00          .819E+03
                              .468E+00          .815E+03
```

.515E+00	.804E+03
.562E+00	.789E+03
.936E+00	.569E+03
.131E+01	.349E+03
.168E+01	.129E+03
.187E+02	.129E+03

DEPTH IN	DIAM IN	C LBS/IN**2	CAVG LBS/IN**2	GAMMA AVG LBS/IN**2	E50
258.00	24.000	.56E+01	.56E+01	.62E-01	.650E-02

AS =.60 AC =.30

Y,IN	P,LBS/IN
.000E+00	.000E+00
.468E-01	.402E+03
.936E-01	.568E+03
.140E+00	.662E+03
.187E+00	.723E+03
.234E+00	.765E+03
.281E+00	.793E+03
.328E+00	.810E+03
.374E+00	.818E+03
.421E+00	.819E+03
.468E+00	.815E+03
.515E+00	.804E+03
.562E+00	.789E+03
.936E+00	.569E+03
.131E+01	.349E+03
.168E+01	.129E+03
.187E+02	.129E+03

DEPTH IN	DIAM IN	C LBS/IN**2	CAVG LBS/IN**2	GAMMA AVG LBS/IN**2	E50
270.00	24.000	.56E+01	.56E+01	.62E-01	.650E-02

AS =.60 AC =.30

Y,IN	P,LBS/IN
.000E+00	.000E+00
.468E-01	.402E+03
.936E-01	.568E+03
.140E+00	.662E+03
.187E+00	.723E+03
.234E+00	.765E+03
.281E+00	.793E+03
.328E+00	.810E+03
.374E+00	.818E+03
.421E+00	.819E+03
.468E+00	.815E+03
.515E+00	.804E+03
.562E+00	.789E+03
.936E+00	.569E+03
.131E+01	.349E+03
.168E+01	.129E+03
.187E+02	.129E+03

DEPTH IN	DIAM IN	C LBS/IN**2	CAVG LBS/IN**2	GAMMA AVG LBS/IN**2	E50
306.00	24.000	.56E+01	.56E+01	.62E-01	.650E-02

AS =.60 AC =.30

Y,IN	P,LBS/IN
.000E+00	.000E+00
.468E-01	.402E+03

.936E-01	.568E+03
.140E+00	.662E+03
.187E+00	.723E+03
.234E+00	.765E+03
.281E+00	.793E+03
.328E+00	.810E+03
.374E+00	.818E+03
.421E+00	.819E+03
.468E+00	.815E+03
.515E+00	.804E+03
.562E+00	.789E+03
.936E+00	.569E+03
.131E+01	.349E+03
.168E+01	.129E+03
.187E+02	.129E+03

DEPTH IN	DIAM IN	C LBS/IN**2	CAVG LBS/IN**2	GAMMA AVG LBS/IN**2	E50
366.00	24.000	.56E+01	.56E+01	.62E-01	.650E-02

AS =.60 AC =.30

Y,IN	P,LBS/IN
.000E+00	.000E+00
.468E-01	.402E+03
.936E-01	.568E+03
.140E+00	.662E+03
.187E+00	.723E+03
.234E+00	.765E+03
.281E+00	.793E+03
.328E+00	.810E+03
.374E+00	.818E+03
.421E+00	.819E+03
.468E+00	.815E+03
.515E+00	.804E+03
.562E+00	.789E+03
.936E+00	.569E+03
.131E+01	.349E+03
.168E+01	.129E+03
.187E+02	.129E+03

O U T P U T I N F O R M A T I O N

```
*************************************************
* COMPUTE LOAD-DISTRIBUTION AND LOAD-DEFLECTION *
* CURVES FOR LATERAL LOADING                    *
*************************************************
```

LOADING NUMBER 1

BOUNDARY CONDITION CODE	=	1
LATERAL LOAD AT THE PILE HEAD	=	.200E+04 LBS
MOMENT AT THE PILE HEAD	=	.600E+05 IN-LBS
AXIAL LOAD AT THE PILE HEAD	=	.650E+03 LBS

X IN	DEFLECTION IN	MOMENT LBS-IN	SHEAR LBS	SLOPE RAD.	TOTAL STRESS LBS/IN**2	FLEXURAL RIGIDITY LBS-IN**2	SOIL REACTION LBS/IN
*****	*********	*********	*********	*********	*********	*********	*********
.0	.254E+00	.600E+05	.200E+04	-.310E-02	.456E+02	.521E+11	-.365E+02
6.0	.236E+00	.714E+05	.177E+04	-.309E-02	.540E+02	.521E+11	-.404E+02
12.0	.217E+00	.813E+05	.152E+04	-.308E-02	.613E+02	.521E+11	-.441E+02
18.0	.199E+00	.896E+05	.124E+04	-.307E-02	.674E+02	.521E+11	-.476E+02
24.0	.180E+00	.962E+05	.946E+03	-.306E-02	.723E+02	.521E+11	-.508E+02
30.0	.162E+00	.101E+06	.633E+03	-.305E-02	.758E+02	.521E+11	-.536E+02
36.0	.144E+00	.104E+06	.303E+03	-.304E-02	.779E+02	.521E+11	-.561E+02
42.0	.126E+00	.105E+06	-.396E+02	-.303E-02	.785E+02	.521E+11	-.582E+02
48.0	.108E+00	.103E+06	-.394E+03	-.301E-02	.776E+02	.521E+11	-.598E+02
54.0	.895E-01	.999E+05	-.755E+03	-.300E-02	.751E+02	.521E+11	-.607E+02
60.0	.716E-01	.943E+05	-.112E+04	-.299E-02	.709E+02	.521E+11	-.609E+02
66.0	.537E-01	.865E+05	-.148E+04	-.298E-02	.652E+02	.521E+11	-.598E+02
72.0	.358E-01	.765E+05	-.183E+04	-.297E-02	.578E+02	.521E+11	-.570E+02
78.0	.180E-01	.645E+05	-.215E+04	-.296E-02	.490E+02	.521E+11	-.504E+02
84.0	.257E-03	.507E+05	-.236E+04	-.296E-02	.388E+02	.521E+11	-.183E+02
90.0	-.175E-01	.362E+05	-.225E+04	-.295E-02	.281E+02	.521E+11	.548E+02
96.0	-.352E-01	.237E+05	-.189E+04	-.295E-02	.189E+02	.521E+11	.667E+02
102.0	-.528E-01	.136E+05	-.146E+04	-.295E-02	.115E+02	.521E+11	.738E+02
108.0	-.705E-01	.616E+04	-.101E+04	-.294E-02	.598E+01	.521E+11	.794E+02
114.0	-.882E-01	.157E+04	-.515E+03	-.294E-02	.259E+01	.521E+11	.839E+02
120.0	-.106E+00	.000E+00	.000E+00	-.294E-02	.144E+01	.521E+11	.878E+02

OUTPUT VERIFICATION

THE MAXIMUM MOMENT IMBALANCE FOR ANY ELEMENT = .126E-06 IN-LBS
THE MAX. LATERAL FORCE IMBALANCE FOR ANY ELEMENT = .192E-07 LBS

OUTPUT SUMMARY

PILE-HEAD DEFLECTION = .254E+00 IN
COMPUTED SLOPE AT PILE HEAD = -.310E-02
MAXIMUM BENDING MOMENT = .105E+06 LBS-IN
MAXIMUM SHEAR FORCE = -.236E+04 LBS
NO. OF ITERATIONS = 92
NO. OF ZERO DEFLECTION POINTS = 1

S U M M A R Y T A B L E

BOUNDARY CONDITION BC1	BOUNDARY CONDITION BC2	AXIAL LOAD LBS	PILE HEAD DEFLECTION IN	MAX. MOMENT IN-LBS	MAX. SHEAR LBS
.2000E+04	.6000E+05	.6500E+03	.2544E+00	.1046E+06	-.2361E+04

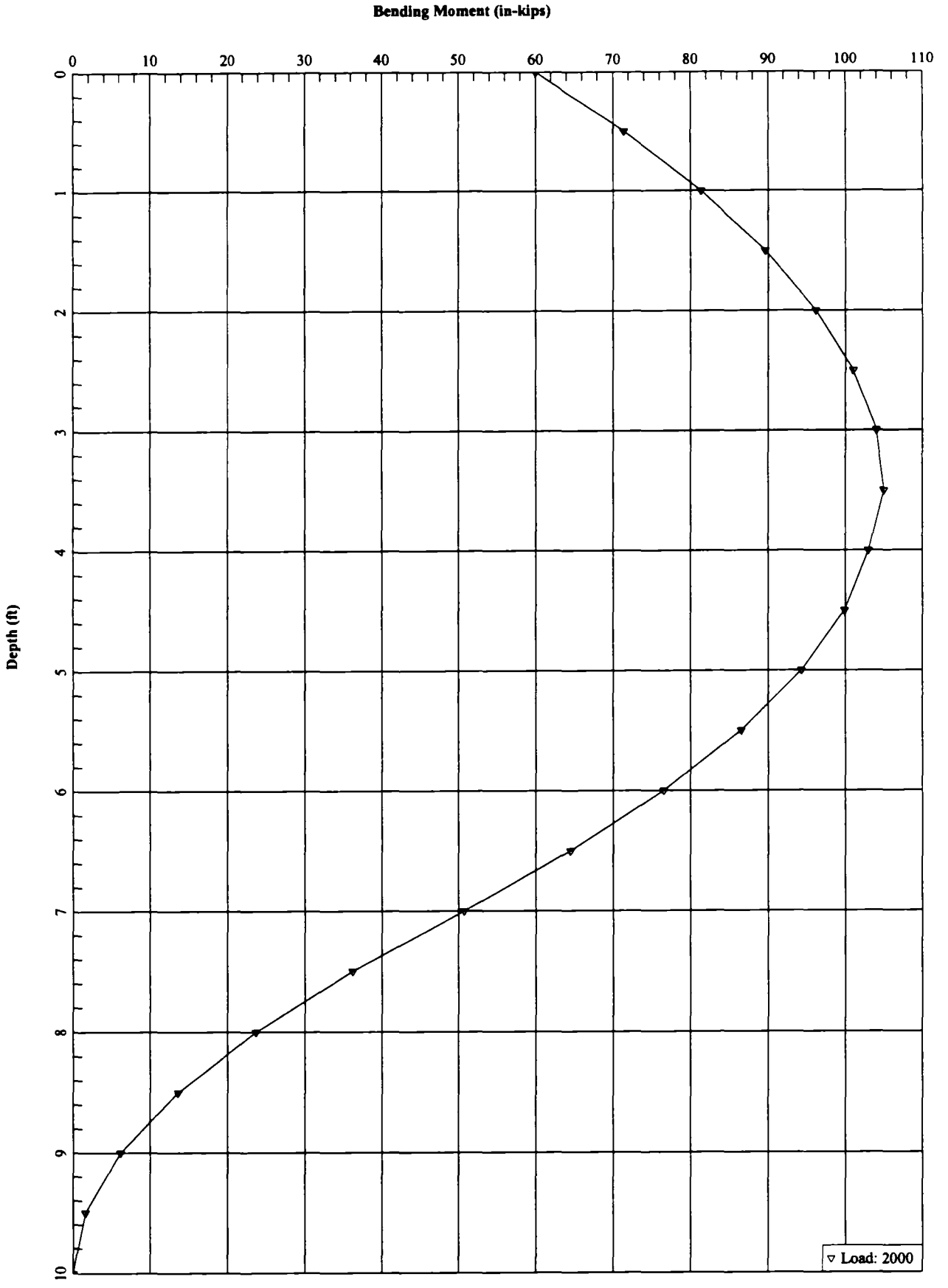
Bending Moment (in-kips)
0
10
20
30
40
50
60
70
80
90
100
110
Depth (ft)
0
1
2
3
4
5
6
7
8
9
10
Load: 2000

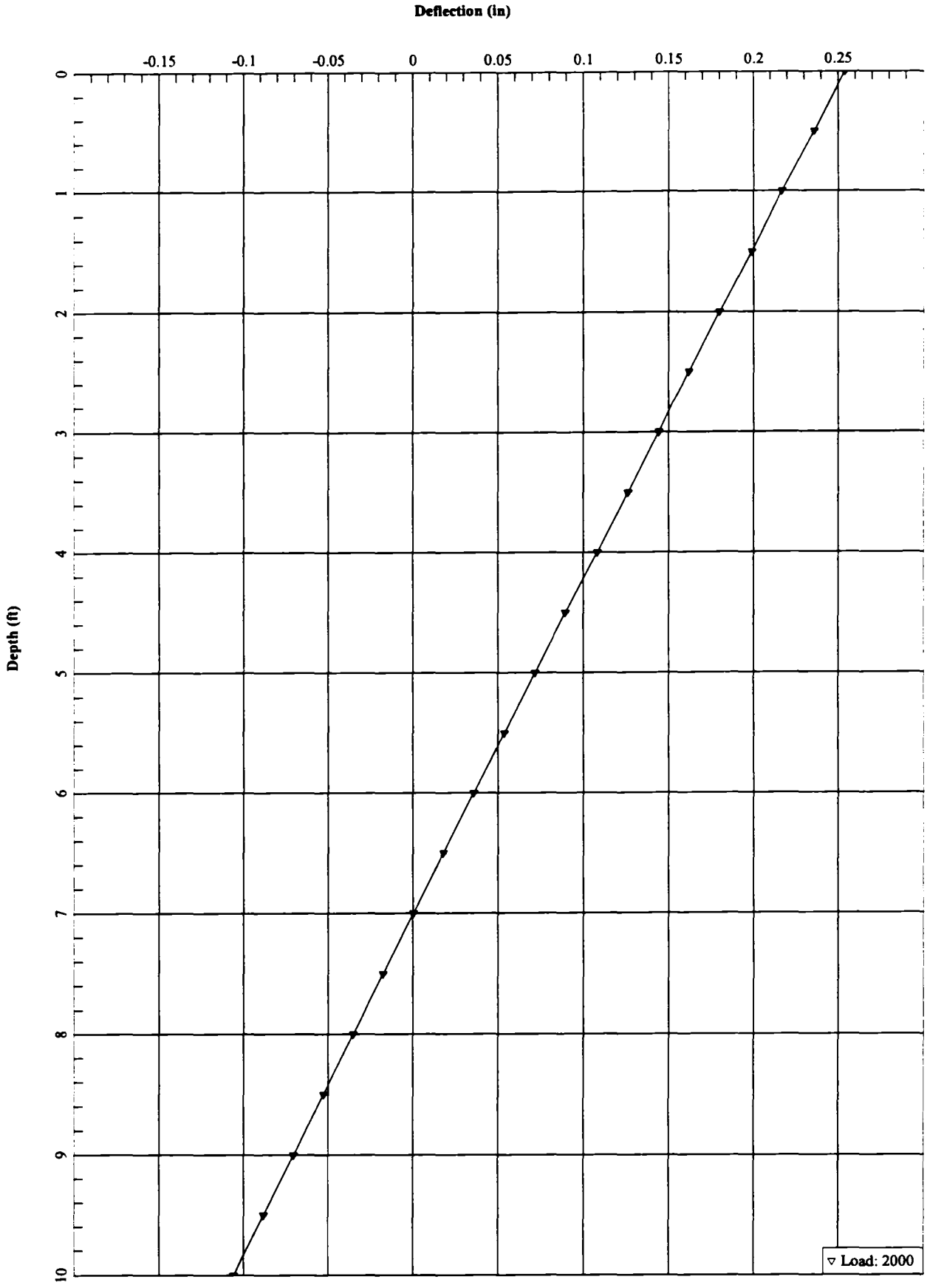
Deflection (in)
-0.15
-0.1
-0.05
0
0.05
0.1
0.15
0.2
0.25
Depth (ft)
0
1
2
3
4
5
6
7
8
9
10
Load: 2000

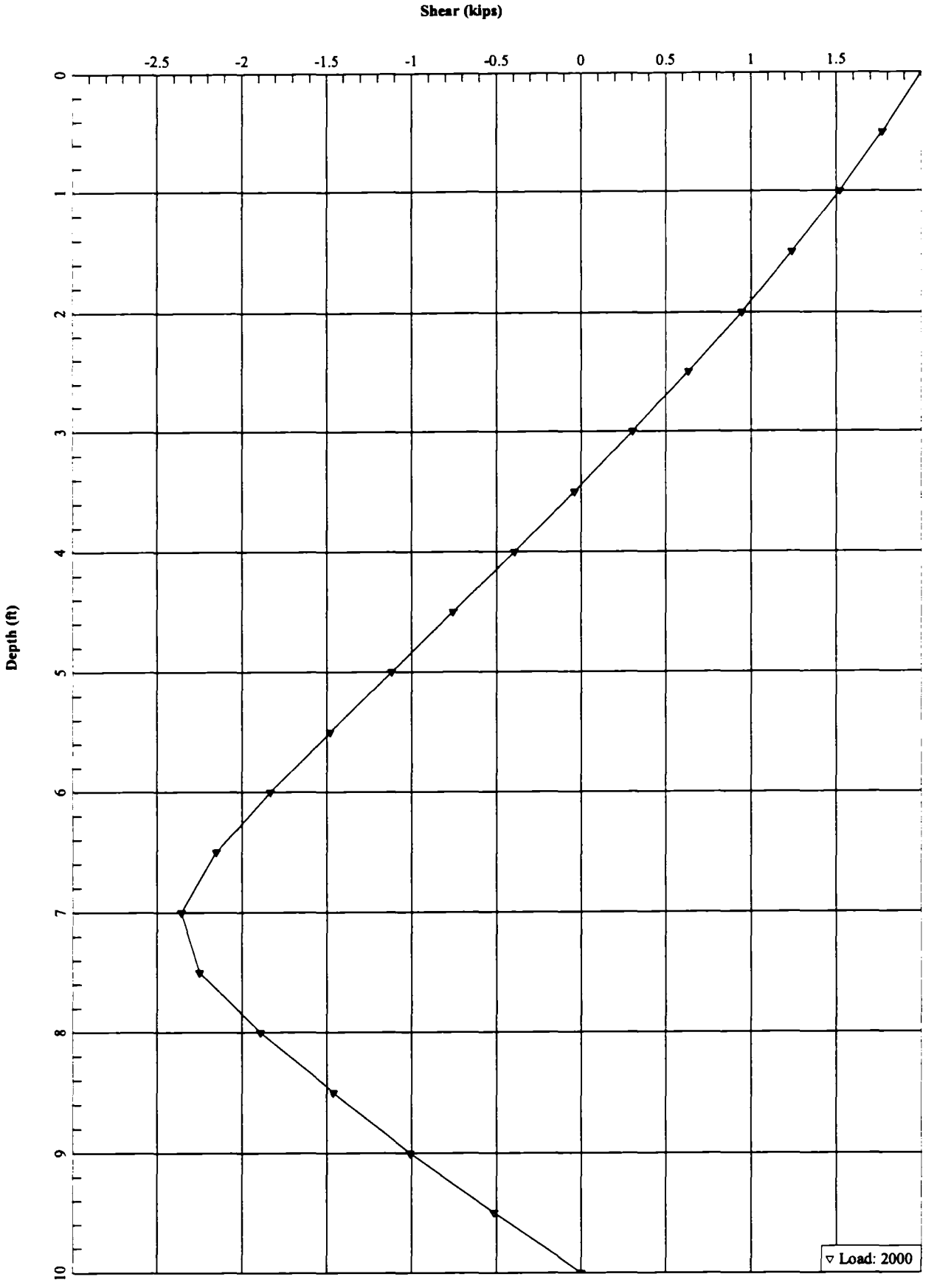
Shear (kips)
-2.5
-2
-1.5
-1
-0.5
0
0.5
1
1.5
Depth (ft)
0
1
2
3
4
5
6
7
8
9
10
Load: 2000

depth= 0 - 150; Stiff clay w/o free water

unit wt.= 0.0608
Ø= 0; c= 1.389

unit wt.= 0.06366
Ø= 0; c= 5.569

depth= 150 - 1000; Stiff clay w/free water

DMJM HARRIS	PROJECT: 8HOC LIGHT POLES ON TRAIL	JOB NO.	SHEET 5 of
		DESIGNED BY SED	DATE APR 07
SUBJECT: FOUNDATION DESIGN		CHECKED BY	DATE

DRILLED SHAFT DESIGN:

DIAMETER = 24"

AREA = $\pi (24")^2/4 = 452.4 \text{ in}^2$

1% STL = 4.52 in^2 Min.

6 #8, $A_s = 4.74 \text{ in}^2$

BENDING: BY INSPECTION THE SECTION IS ADEQUATE.

SHEAR: $V_{MAX} = 2.36$ K BY INSPECTION, NO SHEAR REINF IS NECESSARY. USE 3/8" DIA SPIRAL

Pappi Lighting

X-Tron Poles

Technical Specifications
3.25" Straight Square

All X-tron poles are manufactured from extruded aluminum 6063 T6 alloy. The durability and excellent finishing characteristics provide superior appearance and performance. X-tron aluminum poles are never welded. Instead, a mechanical compression method of joining components is utilized to take advantage of the full 25,000 P.S.I. yield strength. All internal fasteners carry 500 hour salt spray plating and stainless steel is utilized for all exposed fasteners. X-tron offers a two piece aluminum 713 alloy base casting designed to exceed the maximum pole loading. The hot-dipped, galvanized 'Richmond' anchor cage and wooden positioning template ensure proper alignment.

CAT. #	Height ft (m)	EPA 70mph	Wind 80mph	Velocity 90mph	100mph	Pole Weight lbs (Kgs)
SA3310	10 (3.0)	15.7	11.6	8.7	6.7	20 (9.3)
SA3312	12 (3.7)	12.5	9.0	6.6	4.9	24 (11.2)
SA3315	15 (4.6)	7.2	4.9	3.4	2.3	30 (13.9)
SA3318	18 (5.5)	5.1	3.3	2.0	1.1	36 (16.7)
SA3320	20 (6.1)	4.0	2.3	1.2	0.4	40 (18.6)

Note: EPA. calculations are based on AASHTO specs including a 30% gust factor and allowances for snow and ice build-up.

Mounting Configurations

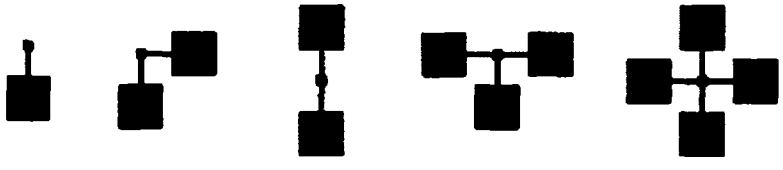

B-1 B-2 90° B-2 180° B-3 B-4

Custom mounting is available to order. Please specify with drawings.

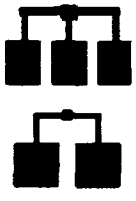

Anchor Assembly

c/w 4-1/2" X 4" bolts
7" (178mm) B.C.D.
12" (304mm) Deep

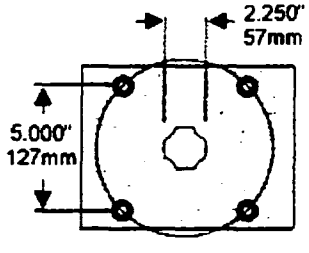

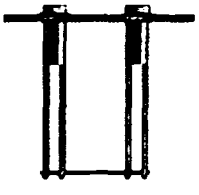

Tenon Mount Specs

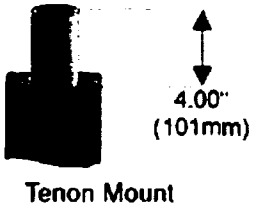

Tenon Mount
2-3/8" Dia. (TN1)

Other Features

Color

Paint

- White (WHI)
- Black (MBK)
- Bronze (SBZ)
- Special (SPC)*

* color chip required

Anodizing

- Clear (CLA)
- Black (BKA)
- Bronze (BZA)

Options

- Photo Cell (PC)
- Recepticle (RCTL)
- Bannar Arms (BA)

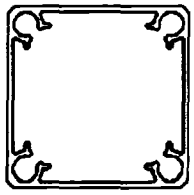

Technical specifications for other X-Tron Poles:

- 3.25" Straight Square
- 4" Straight Square
- 5" Straight Square
- 4.5" Straight Deesquare
- 4.3" Straight Round
- 5.5" Straight Round
- 5" Straight Quadarc
- 6" Straight Triarc

Return to X-Tron page

| Linear Fluorescent | Area & Roadway | Architectural Area | Garage & Under Canopy |

| HOME | PRODUCTS | ABOUT US | OUR CLIENTS | GETTING A QUOTE |

© Pappi Lighting Limited

Pappi Lighting

Auraform Series
Technical Specifications
Auraform Two

Housing

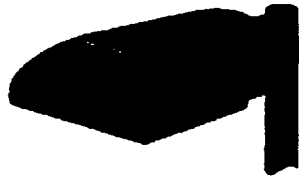

Extruded 6063 T6 aluminum Min 0.100" (2.5mm) max 0.470" (12mm) incorporating precision, no-weld clamp joint construction. For clarity, sealed optical chamber utilizes 200 micron airflow filter element.

Reflector

Optics re segmented, multifaceted and rotatable. Eight (8) Area lighting distributions are avaliable. Types are: FM, FF, V, VS, VR, VE, III, and II.

Lens / Frame

6063 T6 extruded aluminum alloy. Self-hinge that opens to 120 degrees. Single handed tool-less access and removal is standard. Tempered safety glass encased with EPDM gasket is standard.

Electrical

High power factor ballasts rated to -30 C (-20 F) mounted to tool-less entry, hinged 'heat-sink door' for increased ballast life. 4 KV rated medium base lamp holders are utilized for all reflector types.

Finish

For long life, oven baked polyester powder coatings utilizing muti stage pre-treatment are supplied as standard. Hard color anodizing is optional.

Dimensions

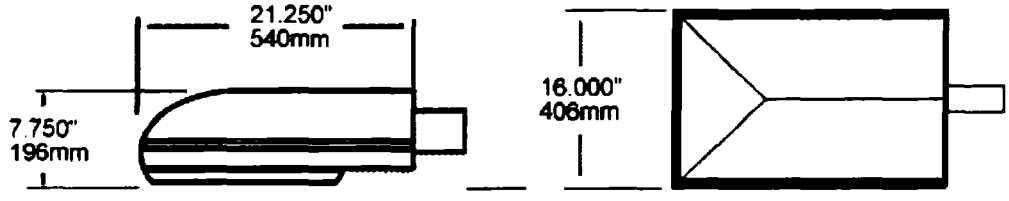

Other Features

Wattage	Options	Color/Finish
• 175	• Photo Control (PC)	• White (WHI)
• 150	• Quartz Restrike (Q)	• Black (MBK)
• 100	• Fuse (F)	• Bronze (BZS)
→ • 70	• Modular Discon. (MD)	• Special (SPC)
• 50	• House Side Shield (HS)	Color chip required
• 35	• 10" Mounting Arm (AS10)	• **Anodizing**

- 4" Mounting Arm (AS4)
  - Clear (CLA)
  - Black (MBA)
  - Bronze (BZA)

Technical specifications for other Architechural Area Lighting:

- Auraform One
- Auraform Two
- Miniarcline
- Midarcline
- Arcline

Return to Architechural Area page

| Linear Fluorescent | Area & Roadway | Garage & Under Canopy | X-Tron Poles |

| HOME | PRODUCTS | ABOUT US | OUR CLIENTS | GETTING A QUOTE |

© Pappi Lighting Limited

Oliden, Sergio

From: Labye, Chris
Sent: Friday, June 21, 2002 9:56 AM
To: Oliden, Sergio
Subject: Wall area

Sergio,

Here's a summary of the wall info for BHOC.

87th Avenue
Inlet retaining walls = 1554 square feet
Inlet headwall = 433 square feet
Outlet retaining walls = 1092 square feet
Outlet headwall = 499 square feet

83rd Avenue
Inlet retaining walls = 1077 square feet
Inlet Headwall = 334 square feet
Outlet retaining walls = 2709 square feet
Outlet headwall = 317 square feet

Christopher Labye,
Bridge Engineer

DMJM+HARRIS

General Unit Definitions

$kips := 1000lbf$ $pcf := \frac{lbf}{ft^3}$ $CY := 27ft^3$ $lf := ft$

$kcf := 1000pcf$ $ksi := 1000psi$ $sqft := ft^2$ $sqyd := 9ft^2$

$wconc := 150pcf$ weight of concrete

Inlet Retaining Walls

Concrete quantities are per ADOT Std B-18.30

$seinletwall := 30ft \cdot 1.048\frac{CY}{ft} + 32ft \cdot 0.645\frac{CY}{ft} + (30ft + 10in) \cdot 0.421\frac{CY}{ft}$

$swinletwall := 30ft \cdot 1.048\frac{CY}{ft} + 25ft \cdot 0.645\frac{CY}{ft} + (12ft + 8in) \cdot 0.421\frac{CY}{ft}$

$inletwall := seinletwall + swinletwall$

$\boxed{inletwall = 118CY}$

Inlet Class A (f'c=3000 psi) Headwall

$inletheight := 1070.54ft - (10.5in) - 1058.17ft - 5ft$

$inletheight = 6.5ft$

$inletheadwall := inletheight \cdot 12in \cdot 66.5ft$ Length as measured in Microstation

$\boxed{inletheadwall = 16CY}$

See spreadsheet for reinforcing

Inlet Channel Liner

Note -- channel slopes at this location, so slope is adjusted by 1.030 (approx. 4:1 slope) -- with a flat spot at beginning of culvert

$$inletliner := 64.58ft \cdot (11ft + 2.5in) \cdot 1.030$$

$$\boxed{inletliner = 82.8\,sqyd}$$

Inlet Safety Railing

Length is measured in Microstation

$$\boxed{inletrail := 228.5ft}$$

Outlet Retaining Walls

Concrete quantities are per ADOT Std B-18.30

$$nwoutletwall := 21ft \cdot 1.048\frac{CY}{ft} + 20ft \cdot 0.645\frac{CY}{ft} + (15ft + 11.5in) \cdot 0.372\frac{CY}{ft}$$

$$neoutletwall := 20ft \cdot 1.048\frac{CY}{ft} + 20ft \cdot 0.645\frac{CY}{ft} + (15ft + 6.5in) \cdot 0.372\frac{CY}{ft}$$

$$outletwall := nwoutletwall + neoutletwall$$

$$\boxed{outletwall = 80.5\,CY}$$

Outlet Class A (f'c=3000 psi) Headwall

$outletheight := 1070.43ft - (10.5in) - 1058.05ft - 5ft$

$outletheight = 6.5ft$

$outletheadwall := outletheight \cdot 12in \cdot 76.7ft$ Length as measured in Microstation

$\boxed{outletheadwall = 18.5CY}$

See spreadsheet for reinforcing

Outlet Pedestrian Rail

Length is measured in Microstation

$\boxed{outletrail := 191.4ft}$

Excavation

Assume existing ground elevation is 1070 ft for inlet and outlet (a little low for inlet, but higher for outlet -- averages out)

SE Wall

$sewallexcv := 30ft \cdot (1070ft - 1056.54ft + 1.25ft) \cdot (9ft + 3ft) + 32ft \cdot (1070ft - 1061.54ft + 1.16ft) \cdot (6.25ft + 3ft) + 30.83ft \cdot (1070ft - 1064.54ft + 1ft) \cdot (4.5ft + 3ft) + 92.83ft \cdot 1.25ft \cdot 1.5ft$

$sewallexcv = 363.4CY$

SW Wall

$swwallexcv := 30ft \cdot (1070ft - 1056.54ft + 1.25ft) \cdot (9ft + 3ft) + 25ft \cdot (1070ft - 1061.54ft + 1.16ft) \cdot (6.25ft + 3ft) + 12.66ft \cdot (1070ft - 1064.54ft + 1ft) \cdot (4.5ft + 3ft) + 67.66ft \cdot 1.25ft \cdot 1.5ft$

$swwallexcv = 305.9CY$

NW Wall

$nwwallexcv := 21ft \cdot (1070ft - 1056.43ft + 1.25ft) \cdot (9ft + 3ft) + 20ft \cdot (1070ft - 1061.43ft + 1.16ft) \cdot (6.25ft + 3ft) + 15.96ft \cdot (1070ft - 1065.43ft + 1ft) \cdot (4ft + 3ft) + 56.96ft \cdot 1.25ft \cdot 1.5ft$

$nwwallexcv = 232CY$

NE Wall

$newallexcv := 20ft \cdot (1070ft - 1056.43ft + 1.25ft) \cdot (9ft + 3ft) + 20ft \cdot (1070ft - 1061.43ft + 1.16ft) \cdot (6.25ft + 3ft) + 15.54ft \cdot (1070ft - 1065.43ft + 1ft) \cdot (4ft + 3ft) + 55.54ft \cdot 1.25ft \cdot 1.5ft$

$newallexcv = 224.7CY$

Backfill

Backfill includes headwalls

SE Wall

$sewallback := 30ft \cdot (1070ft - 1056.54ft + 1.25ft) \cdot (3ft) + 32ft \cdot (1070ft - 1061.54ft + 1.16ft) \cdot (3ft) + 30.83ft \cdot (1070ft - 1064.54ft + 1ft) \cdot (3ft)$

$sewallback = 105.4CY$

SW Wall

$swwallback := 30ft \cdot (1070ft - 1056.54ft + 1.25ft) \cdot (3ft) + 25ft \cdot (1070ft - 1061.54ft + 1.16ft) \cdot (3ft) + 12.66ft \cdot (1070ft - 1064.54ft + 1ft) \cdot (3ft)$

$swwallback = 84.8CY$

NW Wall

$nwwallback := 21ft \cdot (1070ft - 1056.43ft + 1.25ft) \cdot (3ft) + 20ft \cdot (1070ft - 1061.43ft + 1.16ft) \cdot (3ft) + 15.96ft \cdot (1070ft - 1065.43ft + 1ft) \cdot (3ft)$

$nwwallback = 66.1CY$

NE Wall

$newallback := 20ft \cdot (1070ft - 1056.43ft + 1.25ft) \cdot (3ft) + 20ft \cdot (1070ft - 1061.43ft + 1.16ft) \cdot (3ft) + 15.54ft \cdot (1070ft - 1065.43ft + 1ft) \cdot (3ft)$

$newallback = 64.2CY$

Inlet Headwall

$inletback := (6.5ft - 0.5ft) \cdot 66.5ft \cdot 3ft$ $inletback = 44.3CY$

Outlet Headwall

$outletback := (6.5ft - 0.5ft) \cdot 76.7ft \cdot 3ft$ $outletback = 51.1CY$

Totals (reinforcing -- see spreadsheet)

conctotal := outletwall + outletheadwall + inletwall + inletheadwall

conctotal = 232.9CY

pedrail := inletrail + outletrail

pedrail = 419.9ft

extotal := sewallexcv + swwallexcv + nwwallexcv + newallexcv

extotal = 1126CY

backtotal := sewallback + swwallback + nwwallback + newallback + inletback + outletback

backtotal = 415.9CY

General Unit Definitions

$kips := 1000lbf$ $\quad pcf := \frac{lbf}{ft^3}$ $\quad CY := 27ft^3$ $\quad lf := ft$

$kcf := 1000pcf$ $\quad ksi := 1000psi$ $\quad sqft := ft^2$ $\quad sqyd := 9ft^2$

$wconc := 150pcf$ weight of concrete

Inlet Retaining Walls Painting

$inletwall1 := 1.02 \cdot \left[16in \cdot (92.83ft + 9.5in) + 697sqft + 92ft^2\right]$ SE Wall measured in Microstation, 2% added as well as as top of and backside (6") -- includes culvert area

$inletwall2 := 1.02 \cdot \left[16in \cdot (67.66ft + 9.5in) + 509sqft\right]$ SW Wall measured in Microstation, 2% added as well and backside (6")

$inlettotal := inletwall1 + inletwall2$ $\quad \boxed{inlettotal = 1544.4ft^2}$

Inlet Class A (f'c=3000 psi) Headwall Painting

$inletheadwall := 66.5ft \cdot (6.5ft + 12.75in + 6in)$ Length as measured in Microstation

$\boxed{inletheadwall = 536.2sqft}$

Outlet Retaining Walls Painting

$$outletwall1 := 1.02 \cdot \left[16in \cdot (56.96ft + 9.5in) + 430sqft + \frac{92ft^2}{\cos\left(30 \cdot \frac{3.14}{180}\right)}\right]$$

$$outletwall2 := 1.02 \cdot \left[16in \cdot (55.54ft + 9.5in) + 420sqft\right]$$

NW Wall measured in Microstation, 2% added as well as as top of and backside (6") -- includes skewed culvert area (wall 1)

NE Wall measured in Microstation, 2% added as well as as top of and backside (6") (wall 2)

$outlettotal := outletwall1 + outletwall2$ $\quad \boxed{outlettotal = 1130.5ft^2}$

Outlet Class A (f'c=3000 psi) Headwall Painting

$outletheadwall := 76.7ft \cdot (6.5ft + 12.75in + 6in)$ Length as measured in Microstation

$\boxed{outletheadwall = 618.4ft^2}$

$painttotal := inlettotal + outlettotal + inletheadwall + outletheadwall$ $\quad \boxed{painttotal = 3829.4sqft}$

Aesthetic Treatments

Inlet Headwall

$aesthinlethead := 66.5ft \cdot (6.5ft)$ $\boxed{aesthinlethead = 432.3sqft}$

Inlet Retaining Wall

$aesthinletwall := 697ft^2 + 509ft^2$ $\boxed{aesthinletwall = 1206sqft}$

Outlet Headwall

$aesthoutlethead := 76.7ft \cdot 7ft$ $\boxed{aesthoutlethead = 536.9sqft}$

Outlet Retaining Wall

$aesthoutletwall := 430ft^2 + 420ft^2$ $\boxed{aesthoutletwall = 850sqft}$

$aesthtotal := aesthinlethead + aesthinletwall + aesthoutlethead + aesthoutletwall$

$\boxed{aesthtotal = 3025.2sqft}$

Reinforcing Steel

Sheet Description	Reinforcement (lbs)
Inlet Retaining Walls	10957
Outlet Retaining Walls	7450
Inlet Headwall	2331
Outlet Headwall	2678
TOTAL	**23416 lb**

Inlet Retaining Walls Reinforcing

Wall Length (ft)	Reinforcment lb/ft (ADOT Std B-18.30)	Reinforcing Steel (lbs)
30.000	105	**3150**
32.000	55	**1760**
30.833	35	**1079**
30.000	105	**3150**
25.000	55	**1375**
12.667	35	**443**
	TOTAL	**10957**

Outlet Retaining Walls Reinforcing

Wall Length (ft)	Reinforcment lb/ft (ADOT Std B-18.30)	Reinforcing Steel (lbs)
21.000	105	**2205**
20.000	55	**1100**
15.958	30	**479**
20.000	105	**2100**
20.000	55	**1100**
15.542	30	**466**
	TOTAL	**7450**

Inlet Headwall Reinforcing

Bar Size	Metric or English?	Description	Bar Lengths - Enter in feet or meter depending on unit system							# bars	Bar Wt. per ft. or m	Total Wt. lb or kg.
			Bend 1	Bend 2	Bend 3	Bend 4	Bend 5	Bend 6	Bend 7			
4	English	Each face, horizontal bars, 2" clear from edge of wall (lap incl)	66.08	1.500						16	0.668	722
4	English	Vertical bars @ 12"	6.167							68	0.668	280
5	English	Vertical bars @ 12"	6.167							68	1.043	437
5	English	Vertical hooks (3 bends)	3.000	2.320	1.250					68	1.043	466
5	English	Vertical hooks (right-angles)	3.000	3.000						68	1.043	426
	English										#N/A	0
	English										#N/A	0
	English										#N/A	0
	English										#N/A	0
	English										#N/A	0
	English										#N/A	0
	English										#N/A	0
	English										#N/A	0
	English										#N/A	0
	English										#N/A	0
	English										#N/A	0
	English										#N/A	0
	English										#N/A	0
Note: Straight bars are indicated as having only one "bend."											TOTAL	2331

Outlet Headwall Reinforcing

Bar Size	Metric or English?	Description	Bend Lengths - Enter in inches or meters depending on unit system								Bar Wt. per ft. or m.	Total Wt. lb or kg.
			Bend 1	Bend 2	Bend 3	Bend 4	Bend 5	Bend 6	Bend 7	Bend 8		
4	English	Each face, horizontal bars, 2" clear from edge of wall	76.37	1.500						16	0.668	832
4	English	Vertical bars @ 12"	6.167							78	0.668	321
5	English	Vertical bars @ 12"	6.167							78	1.043	502
5	English	Vertical hooks (3 bends)	3.000	2.320	1.250					78	1.043	534
5	English	Vertical hooks (right-angles)	3.000	3.000						78	1.043	488
	English										#N/A	0
	English										#N/A	0
	English										#N/A	0
	English										#N/A	0
	English										#N/A	0
	English										#N/A	0
	English										#N/A	0
	English										#N/A	0
	English										#N/A	0
	English										#N/A	0
	English										#N/A	0
	English										#N/A	0
	English										#N/A	0
	English										#N/A	0
Note: Straight bars are indicated as having only one "bend."											TOTAL	2678

83RD AVE
RCBC

General Unit Definitions

$kips := 1000lbf$ $pcf := \frac{lbf}{ft^3}$ $CY := 27ft^3$ $lf := ft$

$kcf := 1000pcf$ $ksi := 1000psi$ $sqft := ft^2$ $sqyd := 9ft^2$

$wconc := 150pcf$ weight of concrete

Inlet Retaining Walls

Concrete quantities are per ADOT Std B-18.30

$southinletwall := 10ft \cdot 1.988\frac{CY}{ft} + 10ft \cdot 1.285\frac{CY}{ft} + (13ft + 4.5in) \cdot \left(0.790\frac{CY}{ft}\right)$

$northinletwall := 10ft \cdot 1.988\frac{CY}{ft} + 10ft \cdot 1.285\frac{CY}{ft} + (17ft + 2.75in) \cdot \left(0.790\frac{CY}{ft}\right)$

$inletwall := southinletwall + northinletwall$

$\boxed{inletwall = 89.6CY}$

Inlet Class A (f'c=3000 psi) Headwall

$inletheight := 1085.66ft - (1ft + 0.5in) - 1066.73ft - 8ft$

$inletheight = 9.9ft$

$inletheadwall := inletheight \cdot 12in \cdot 33.7ft$ Length as measured in Microstation

$\boxed{inletheadwall = 12.3CY}$

See spreadsheet calculations for reinforcing.

Inlet Pedestrian Rail

Length is measured in Microstation

$\boxed{inletrail := \cancel{104.3ft}}$ 0.0

Outlet Retaining Walls

Concrete quantities are per ADOT Std B-18.30

$nwoutletwall := 30ft \cdot 1.988 \frac{CY}{ft} + 30ft \cdot 1.163 \frac{CY}{ft} + (27ft + 0.25in) \cdot 0.725 \frac{CY}{ft}$

$swoutletwall := 30ft \cdot 1.988 \frac{CY}{ft} + 30ft \cdot 1.163 \frac{CY}{ft} + \left(27ft + 10in + \frac{5}{16}in\right) \cdot 0.725 \frac{CY}{ft}$

$outletwall := nwoutletwall + swoutletwall$

$\boxed{outletwall = 228.8CY}$

Outlet Class A (f'c=3000 psi) Headwall

$outletheight := 1084.80ft - (1ft + 0.5in) - 1066.35ft - 8ft$

$outletheight = 9.4ft$

$outletheadwall := outletheight \cdot 12in \cdot 33.7ft$ Length as measured in Microstation

$\boxed{outletheadwall = 11.7CY}$

See spreadsheet for reinforcing

Outlet Pedestrian Rail

Length is measured in Microstation

$\boxed{outletrail := 209.2ft}$

Excavation

Assume existing ground elevation is 1085.1 ft for inlet and 1084.3 outlet

N Wall

$Nwallexcv := 10ft \cdot (1085.1ft - 1064.66ft + 1.83ft) \cdot (12.5ft + 3ft) + 10ft \cdot (1085.1ft - 1069.66ft + 1.42ft) \cdot (10ft + 3ft) + 17.23ft \cdot (1085.1ft - 1074.66ft + 1ft) \cdot (7.5ft + 3ft) + 37.23ft \cdot 1.25$

$Nwallexcv = 288.3CY$

S Wall

$Swallexcv := 10ft \cdot (1085.1ft - 1064.66ft + 1.83ft) \cdot (12.5ft + 3ft) + 10ft \cdot (1085.1ft - 1069.66ft + 1.42ft) \cdot (10ft + 3ft) + 13.38ft \cdot (1085.1ft - 1074.66ft + 1ft) \cdot (7.5ft + 3ft) + 33.38ft \cdot 1.25$

$Swallexcv = 270.9CY$

NW Wall

$nwwallexcv := 30ft \cdot (1084.3ft - 1063.8ft + 1.83ft) \cdot (12.5ft + 3ft) + 30ft \cdot (1084.3ft - 1069.8ft + 1.33ft) \cdot (9.5ft + 3ft) + 27.02ft \cdot (1084.3ft - 1074.8ft + 1ft) \cdot (6.83ft + 3ft) + 87.02ft \cdot 1.25ft$

$nwwallexcv = 713.8CY$

SW Wall

$SWwallexcv := 30ft \cdot (1084.3ft - 1063.8ft + 1.83ft) \cdot (12.5ft + 3ft) + 30ft \cdot (1084.3ft - 1069.8ft + 1.33ft) \cdot (9.5ft + 3ft) + 27.86ft \cdot (1084.3ft - 1074.8ft + 1ft) \cdot (6.83ft + 3ft) + 87.86ft \cdot 1.25f$

$SWwallexcv = 717CY$

Backfill

Backfill includes headwalls

N Wall

$Nwallback := 10ft \cdot (1085.1ft - 1064.66ft + 1.83ft) \cdot (3ft) + 10ft \cdot (1085.1ft - 1069.66ft + 1.42ft) \cdot (3ft) + 17.23ft \cdot (1085.1ft - 1074.66ft + 1ft) \cdot (3ft)$

$Nwallback = 65.4CY$

S Wall

$Swallback := 10ft \cdot (1085.1ft - 1064.66ft + 1.83ft) \cdot (3ft) + 10ft \cdot (1085.1ft - 1069.66ft + 1.42ft) \cdot (3ft) + 13.38ft \cdot (1085.1ft - 1074.66ft + 1ft) \cdot (3ft)$

$Swallback = 60.5CY$

NW Wall

$nwwallback := 30ft \cdot (1084.3ft - 1063.8ft + 1.83ft) \cdot (3ft) + 30ft \cdot (1084.3ft - 1069.8ft + 1.33ft) \cdot (3ft) + 27.02ft \cdot (1084.3ft - 1074.8ft + 1ft) \cdot (3ft)$

$nwwallback = 158.7CY$

SW Wall

$SWwallback := 30ft \cdot (1084.3ft - 1063.8ft + 1.83ft) \cdot (3ft) + 30ft \cdot (1084.3ft - 1069.8ft + 1.33ft) \cdot (3ft) + 27.86ft \cdot (1084.3ft - 1074.8ft + 1ft) \cdot (3ft)$

$SWwallback = 159.7CY$

Inlet Headwall

$inletback := (9.9ft - 0.5ft) \cdot 33.7ft \cdot 3ft$ $\quad$ $inletback = 35.2CY$

Outlet Headwall

$outletback := (9.4ft - 0.5ft) \cdot 33.7ft \cdot 3ft$ $\quad$ $outletback = 33.3CY$

Totals (reinforcing -- see spreadsheet)

conctotal := outletwall + outletheadwall + inletwall + inletheadwall

$\boxed{conctotal = 342.6CY}$

pedrail := inletrail + outletrail

$\boxed{pedrail = \cancel{313.5ft}}$ 210

extotal := Nwallexcv + Swallexcv + nwwallexcv + SWwallexcv $\quad$ $\boxed{extotal = 1989.9CY}$

backtotal := Nwallback + Swallback + nwwallback + SWwallback + inletback + outletback $\quad$ $\boxed{backtotal = 512.8CY}$

General Unit Definitions

$kips := 1000lbf$ $\quad pcf := \frac{lbf}{ft^3}$ $\quad CY := 27ft^3$ $\quad lf := ft$

$kcf := 1000pcf$ $\quad ksi := 1000psi$ $\quad sqft := ft^2$ $\quad sqyd := 9ft^2$

$wconc := 150pcf$ weight of concrete

Inlet Retaining Walls Painting

$inletwall1 := 0sqft$

$inletwall2 := 0sqft$

No paint or aesthetics for inlet retaining walls since they are temporary

$inlettotal := inletwall1 + inletwall2$ $\quad \boxed{inlettotal = 0ft^2}$

Inlet Class A (f'c=3000 psi) Headwall Painting

$inletheadwall := 0sqft$

$\boxed{inletheadwall = 0sqft}$

Outlet Retaining Walls Painting

$outletwall1 := 1.02 \cdot [16in \cdot (87.02ft + 9.5in) + 920sqft + 66sqft]$ IW Wall measured in Microstation, 2% added as well as as top of and backside (6") -- includes culvert area

$outletwall2 := 1.02 \cdot [16in \cdot (87.86ft + 9.5in) + 929sqft]$ SW Wall measured in Microstation, 2% added as well as as top of and backside (6")

$outlettotal := outletwall1 + outletwall2$ $\quad \boxed{outlettotal = 2193.3ft^2}$

Outlet Class A (f'c=3000 psi) Headwall Painting

$outletheadwall := 33.7ft \cdot (9.4ft + 12.75in + 6in) \cdot 1.02$ Length as measured in Microstation, 2% added

$\boxed{outletheadwall = 376.8ft^2}$

$painttotal := inlettotal + outlettotal + inletheadwall + outletheadwall$ $\quad \boxed{painttotal = 2570.1sqft}$

Aesthetic Treatments

Inlet Headwall

$aesthinlethead := 0sqft$ $\boxed{aesthinlethead = 0sqft}$

Inlet Retaining Wall

$aesthinletwall := 0sqft$ $\boxed{aesthinletwall = 0sqft}$

Outlet Headwall

$aesthoutlethead := 33.7ft \cdot 9.4ft$ $\boxed{aesthoutlethead = 316.8sqft}$

Outlet Retaining Wall

$aesthoutletwall := 920ft^2 + 929ft^2$ $\boxed{aesthoutletwall = 1849sqft}$

$aesthtotal := aesthinlethead + aesthinletwall + aesthoutlethead + aesthoutletwall$

$\boxed{aesthtotal = 2165.8sqft}$

Reinforcing Steel

Sheet Description	Reinforcement (lbs)
Inlet Retaining Walls	9042
Outlet Retaining Walls	23967
Inlet Headwall	3144
Outlet Headwall	3080
TOTAL	**39233 lb**

Inlet Retaining Walls Reinforcing

Wall Length (ft)	Reinforcment lb/ft (ADOT Std B-18.30)	Reinforcing Steel (lbs)
10.000	220	**2200**
10.000	125	**1250**
17.229	70	**1206**
10.000	220	**2200**
10.000	125	**1250**
13.375	70	**936**
	TOTAL	**9042**

Outlet Retaining Walls Reinforcing

Wall Length (ft)	Reinforcment lb/ft (ADOT Std B-18.30)	Reinforcing Steel (lbs)
30.000	220	**6600**
30.000	120	**3600**
27.021	65	**1756**
30.000	220	**6600**
30.000	120	**3600**
27.859	65	**1811**
	TOTAL	**23967**

Inlet Headwall Reinforcing

Bar Size	Metric or English?	Description	[illegible]	[illegible]	[illegible]	[illegible]	[illegible]	[illegible]	[illegible]	# bars	Bar Wt. per ft or m	Total Wt. lb or kg.
4	English	Each face, horizontal bars, 2" clear from edge of wall	33.33							22	0.668	490
4	English	Vertical bars @ 12"	9.567							35	0.668	224
6	English	Vertical bars @ 6"	9.567							70	1.502	1006
6	English	Vertical hooks (3 bends)	3.000	2.550	2.000					70	1.502	794
6	English	Vertical hooks (right-angles)	3.000	3.000						70	1.502	631
	English										#N/A	0
	English										#N/A	0
	English										#N/A	0
	English										#N/A	0
	English										#N/A	0
	English										#N/A	0
	English										#N/A	0
	English										#N/A	0
	English										#N/A	0
	English										#N/A	0
	English										#N/A	0
	English										#N/A	0
	English										#N/A	0
Note: Straight bars are indicated as having only one "bend."											TOTAL	3144

Outlet Headwall Reinforcing

Bar Size	Metric or English?	Description	[illegible]	[illegible]	[illegible]	[illegible]	[illegible]	[illegible]	[illegible]	[illegible]	[illegible]	Total Wt. lb or kg.
4	English	Each face, horizontal bars, 2" clear from edge of wall	33.33							22	0.668	490
4	English	Vertical bars @ 12"	9.067							35	0.668	212
6	English	Vertical bars @ 6"	9.067							70	1.502	953
6	English	Vertical hooks (3 bends)	3.000	2.550	2.000					70	1.502	794
6	English	Vertical hooks (right-angles)	3.000	3.000						70	1.502	631
	English										#N/A	0
	English										#N/A	0
	English										#N/A	0
	English										#N/A	0
	English										#N/A	0
	English										#N/A	0
	English										#N/A	0
	English										#N/A	0
	English										#N/A	0
	English										#N/A	0
	English										#N/A	0
	English										#N/A	0
	English										#N/A	0
Note: Straight bars are indicated as having only one "bend."											TOTAL	3080

LOW FLOW
CROSSING

General Unit Definitions

$kips := 1000lbf$ $\quad pcf := \frac{lbf}{ft^3}$ $\quad CY := yd^3$ $\quad psf := \frac{lbf}{ft^2}$

$kcf := 1000pcf$ $\quad ksi := 1000psi$ $\quad ksf := \frac{kips}{ft^2}$

Low-flow Channel Crossing Design

Precast concrete slabs will be designed to accomodate an H10 load. The following conditions shall apply:

- Lightweight concrete (115 pcf) will be utilized to allow for easier lifting by maintenance personnel.
- Precast widths will be limited to 8'.
- Panels will span approximatetly 6'-10" plus 2 x 3.5" to a total of an 8'-0" CL brg to CL brg dimension.
- Assume 100 lb/ft for optional pedestrian handrail.

$f_c := 3000psi$ Concrete strength

$f_{allowable} := 0.4 \cdot f_c$ $\quad f_{allowable} = 1200psi$

$fy := 60ksi$

$fs := 24ksi$ Reinforcement strength -- ADOT, Grade 60

$n := 7.58$ Modulus ratio

H10 Load

$P_{axial} := 9000lbf$ $\quad w_{h10} := 320\frac{lbf}{ft}$ $\quad impact := 0.30$ $\quad pedrail := 0\frac{lbf}{ft}$ Pedestrian rail will be located off-structure

$L := 7ft + 10in + 2 \cdot \frac{1}{2} \cdot 7in$ CL Brg to CL Brg

$L = 8.42\,ft$

$$Mult := (1 + impact) \cdot \left[P_{axial} \cdot \frac{L}{4} + \frac{w_{h10} \cdot (L)^2}{8} \right] \cdot \frac{1}{10ft} + \frac{pedrail \cdot L^2}{8} \cdot \frac{1}{8ft}$$

Divide by lane width of 10' and pedestrian rail by 8' to get moment on per foot basis

$Mult = 2830\,lbf \cdot \frac{ft}{ft}$

Moment Capacity

Try #6 at 12" and an 8" slab

$slab := 8in$ $bar := 6$ $space := 12in$ $A_{bar} := \frac{\pi}{4}\cdot\left[\frac{(bar\cdot in)}{8}\right]^2$ $A_{bar} = 0.44\,in^2$

$slab_{weight} := 115pcf\cdot 8in\cdot 1ft$ $slab_{weight} = 76.67\frac{lbf}{ft}$ **Utilize lightweight concrete**

$b := 1ft$

$d := slab - \frac{1}{2}\frac{bar}{8}\cdot in - 2in$ $d = 5.62\,in$

$A_s := \frac{A_{bar}}{space}$ $A_s = 0.44\frac{in^2}{ft}$

$\rho := \frac{A_s\cdot 1ft}{b\cdot d}$ $k := \left[2\cdot\rho\cdot n + (\rho\cdot n)^2\right]^{0.5} - \rho\cdot n$

$j := 1 - \frac{k}{3}$

$k = 0.27$
$j = 0.91$

$fcheck := \frac{2\cdot Mult\cdot 1ft}{j\cdot k\cdot b\cdot d^2}$ $fsnew := \frac{Mult\cdot 1ft}{A_s\cdot 1ft\cdot j\cdot d}$

$fcheck = 730\,psi$ $fsnew = 15015\,psi$

Crack Control Check -- AASHTO 8.16.8.4

Assume severe exposure conditions -- per foot basis. Per AASHTO, clear cover shall not be taken greater than 2".

$z := 130\frac{kips}{in}$

$d_c := 2in + \frac{bar\cdot in}{8}\cdot\frac{1}{2}$ $d_c = 2.38\,in$

$A := 2\cdot\frac{\left(2in + \frac{bar\cdot in}{8}\cdot\frac{1}{2}\right)\cdot 12in}{\left(\frac{12in}{space}\right)}$ $A = 57\,in^2$

$f_{sc} := \frac{z}{(d_c\cdot A)^{\frac{1}{3}}}$ $f_{sc} = 25318.03\,psi$ < $0.6\cdot fy = 36000\,psi$

Shear Check

$b_{slab} := 8ft$

$$v_{ult} := \left[\frac{P_{axial}}{b_{slab} \cdot d} + \frac{(320 + 100)\frac{lbf}{ft} \cdot 8ft}{2 \cdot b_{slab} \cdot d} \right] \cdot (1 + impact)$$

$v_{ult} = 25.71\,psi$

$$v_c := 0.95 \cdot \sqrt{\frac{f_c}{psi}} \cdot psi$$

AASHTO 8.15.5.2.1 -- conservative limit on allowable shear stress

$v_c = 52.03\,psi$ > $v_{ult} = 25.71\,psi$

Development Lengths - Reinforcement

Note -- to maintain continuity of the joint, add same reinforcement from headwall in box culvert top wall with appropriate development.

$$l_d := \frac{0.04 \cdot A_{bar} \cdot \frac{fy}{psi \cdot in}}{\sqrt{\frac{f_c}{psi}}} \cdot 1.3$$

$l_d = 25.17\,in$

Basic development length **lightweight concrete utilized**
-- conservatively ignore reduction for As required versus As provided