RIVER BANK STABILIZATION

Perryville Acres
Gila River South of Avondale, Arizona

Registered Professional Engineer (Civil)
CERTIFICATE NO. 5979
TOM W. THOMAS
Date Signed 6/16/82
ARIZONA, U.S.A.

Prepared for

Camp, Dresser & McKee, Inc.
2701 North 16th Street
Phoenix, Arizona

THOMAS-HARTIG & ASSOCIATES, INC.
SOIL & FOUNDATION ENGINEERS

A650.924

THOMAS-HARTIG & ASSOCIATES, INC.

SOIL AND FOUNDATION ENGINEERS

Tom W. Thomas, P.E.
Harry E. Hartig, P.E.

2720 South Hardy Drive
Tempe, Arizona 85282

John P. Boyd, P.E.
Charles H. Atkinson, P.E.
James R. Morrow, Lab Director

Camp Dresser and McKee, Inc.
710 S. Broadway, Suite 210
Walnut Creek, California 84596

15 June 1982

Attention: Roger G. Fry, Associate

Project: Bank Stabilization
Perryville Acres

Project No: 82-379P

In accordance with your authorization, test borings were drilled and backhoe inspection pits were excavated adjacent to the north crest of the Gila River embankment along an approximate 1600 linear foot section of the embankment which is to be stabilized to resist scour during periods of heavy river flow. The location of the embankment to be stabilized is shown on the accompanying vicinity plan, and the location of the test borings and inspection pits are shown on the accompanying site plan.

The methods of proposed stabilization are shown on the following sketch received from Camp, Dresser and McKee, Inc. (see page 2).

Five (5) test borings (1P - 5P) were drilled on 300 to 500 foot spacings along the crest of the embankment. The borings were drilled and sampled to depths of approximately 10 feet below the adjacent riverbed level (as received by Hess, Fogt & Rountree, Inc.) using a truck mounted CME-55 drilling rig equipped with continuous hollow-stem flight augers. Driven samples were taken on 5 foot intervals during drilling, and auger cutting samples were taken of all strata encountered. A driven ring-lined sampler (3.0" O.D. and 2.42" I.D.) was used in the predominantly fine-grained soils, and a standard penetration test drive sampler (ASTM: D1586) was used in the predominantly coarse grained soils. Samples taken during the test drilling were subjected to the following laboratory tests (see page 3).

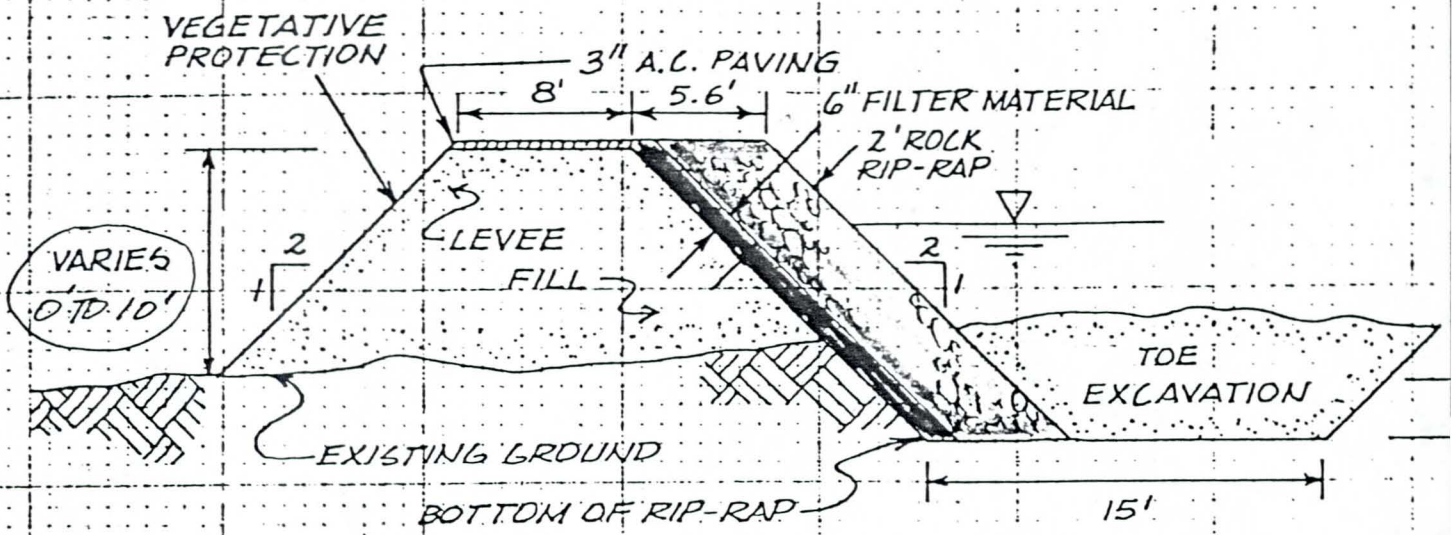

TYPICAL LEVEE

NOT TO SCALE

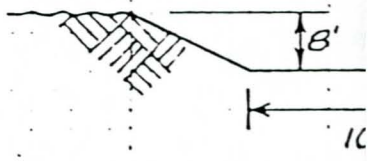

TYPICAL LOW

NOT TO SCALE

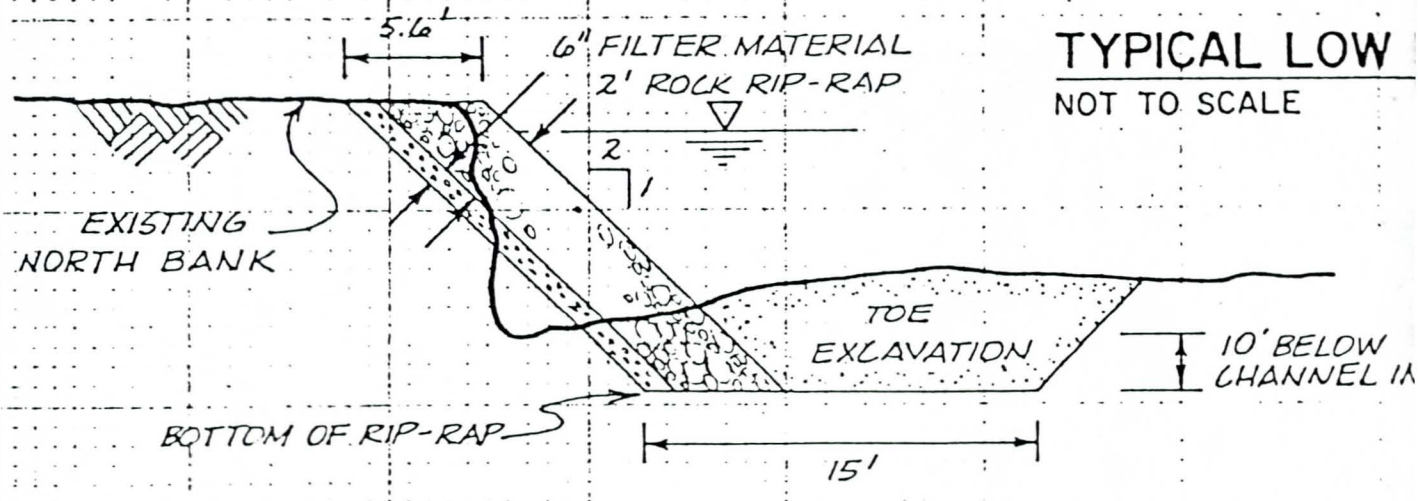

TYPICAL BANK STABILIZATION

NOT TO SCALE

Received from Roger G. Fry, Associate
Camp, Dresser and McKee, Inc.

Test	Sample(s)	Purpose
Dry Density & Moisture Content	Driven Ring Samples (17)	In-situ density and field moisture
Gradation & Plastcitiy	Auger Cutting Samples (9)	Laboratory classification
Direct Shear	*Ring Samples (3)	Shear Strength
Compression	*Ring Samples (3)	Compressibility potential

*Lowest density fine-grained subsoils were selected for analyses.

Three (3) backhoe inspection pits (6P - 8P) were also excavated adjacent to a section of the crest where large rocks (rip-rap) had been placed. Portions of the embankment had been scoured during periods of heavy river flow, and those portions had been restored with fill materials by local farmers. Rubble containing considerable large concrete fragments had been placed along much of the embankment, with a section of large rocks placed along an approximate 190 foot long section. The three (3) backhoe pits were excavated to better determine the thickness of the rock zone.

A number of backhoe inspection pits also would have been excavated in the adjacent river bottom, but access into the river bottom was not possible without extensive dozer work.

The findings of the test drilling and test pits are presented in "Field Results", and the findings of the testing are presented in "Laboratory Results". Their results are discussed as follows.

Subsoil Stratification: The embankment soils are predominantly fine sandy silts and clays, and medium to fine sands containing small amounts of silt and fine gravel. These soils overlie sand and gravel mixtures which are also the typical river bottom materials. The following tabulation presents a generalization of the depths and thicknesses of the predominant strata.

Test Boring	*Height of Crest	Fine Sandy Silts and Clays	Medium to Fine Sands	Sand & Gravel Mixtures
1P	20'	0 - 9'	9' - 21'	21' - 30'
2P	20'	0 - 14'	14' - 23'	23' - 30'
3P	21'	**0 - 12'	12' - 22'	22' - 31'
4P	18'	0 - 17'	---	17' - 28'
5P	17'	0 - 8'	8' - 18'	18' - 27'

*From Hess, Fogt and Rountree, Inc.

**Contains some rubble (apparently fill materials placed by local farmers while restoring the embankments).

Groundwater: Free ground water was encountered in the test borings at depths of 1 to 5 feet below the level of the adjacent river bottom. No surface water was present in the channel at the time of investigation.

Rock (Rip-Rap) Zone: Although rubble has been placed throughout much of the approximate 1600 linear feet of the embankment, clean rock was exposed along an approximate 190 foot section (between stations 1009 + 80 to 1011 + 70). The rock sizes were generally 24 to 36 inches. The top width of the rock zone ranged from 10 to 20 feet at the 3 locations of investigation.

Please do not hesitate to call if there are any questions.

Respectfully submitted,

THOMAS-HARTIG & ASSOCIATES, INC.

By: _____ Reviewed by: _____

Tom W. Thomas, P.E. John P. Boyd, P.E.

/sdf

Copies to: Addressee (4)
Hess, Fogt and Rountree, Inc./Attn: Jay Rountree (1)

FIELD RESULTS

Vicinity Plan

Site Plan

Legend of Soil Classification

Test Boring Logs

Test Pit Logs

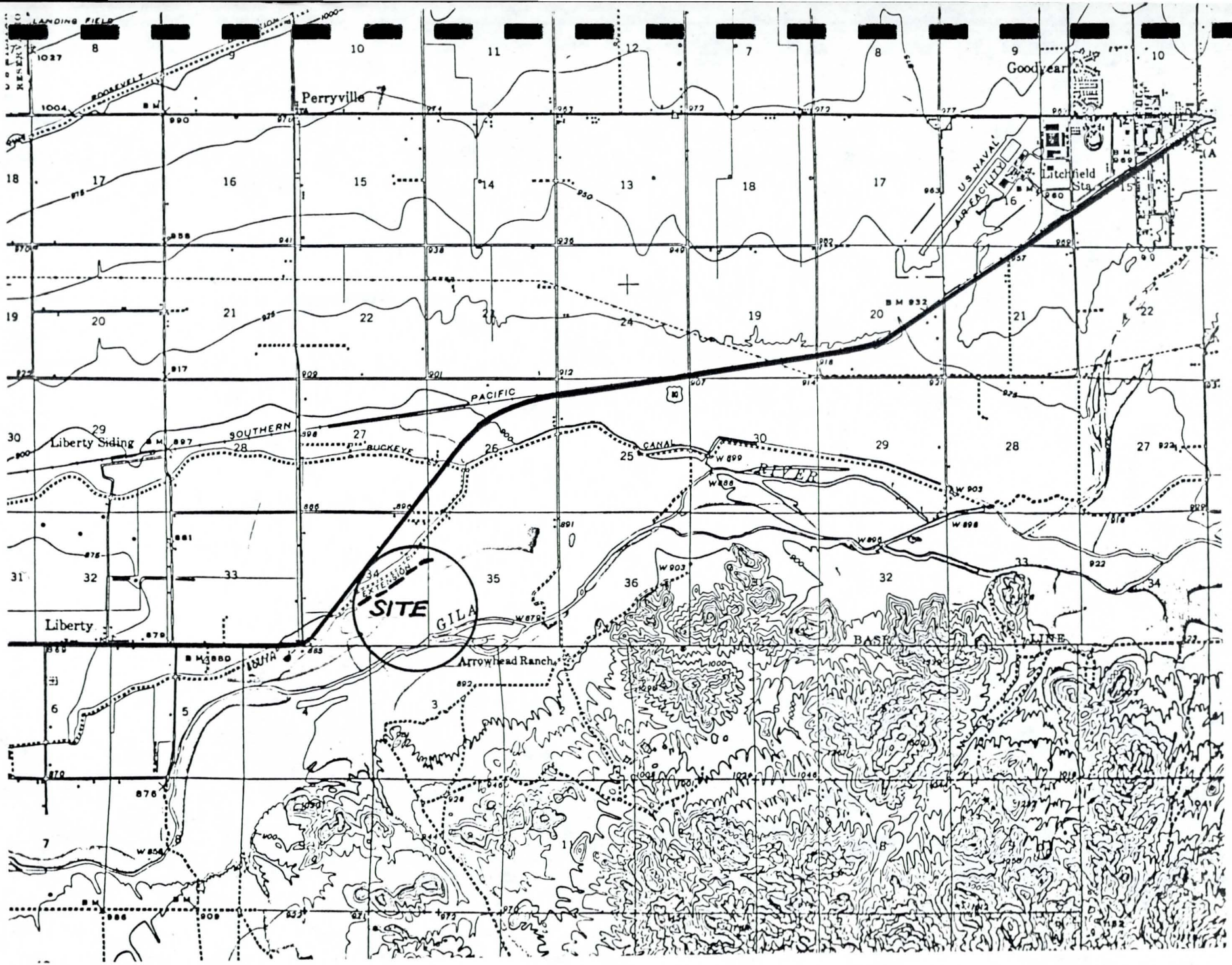

VICINITY PLAN

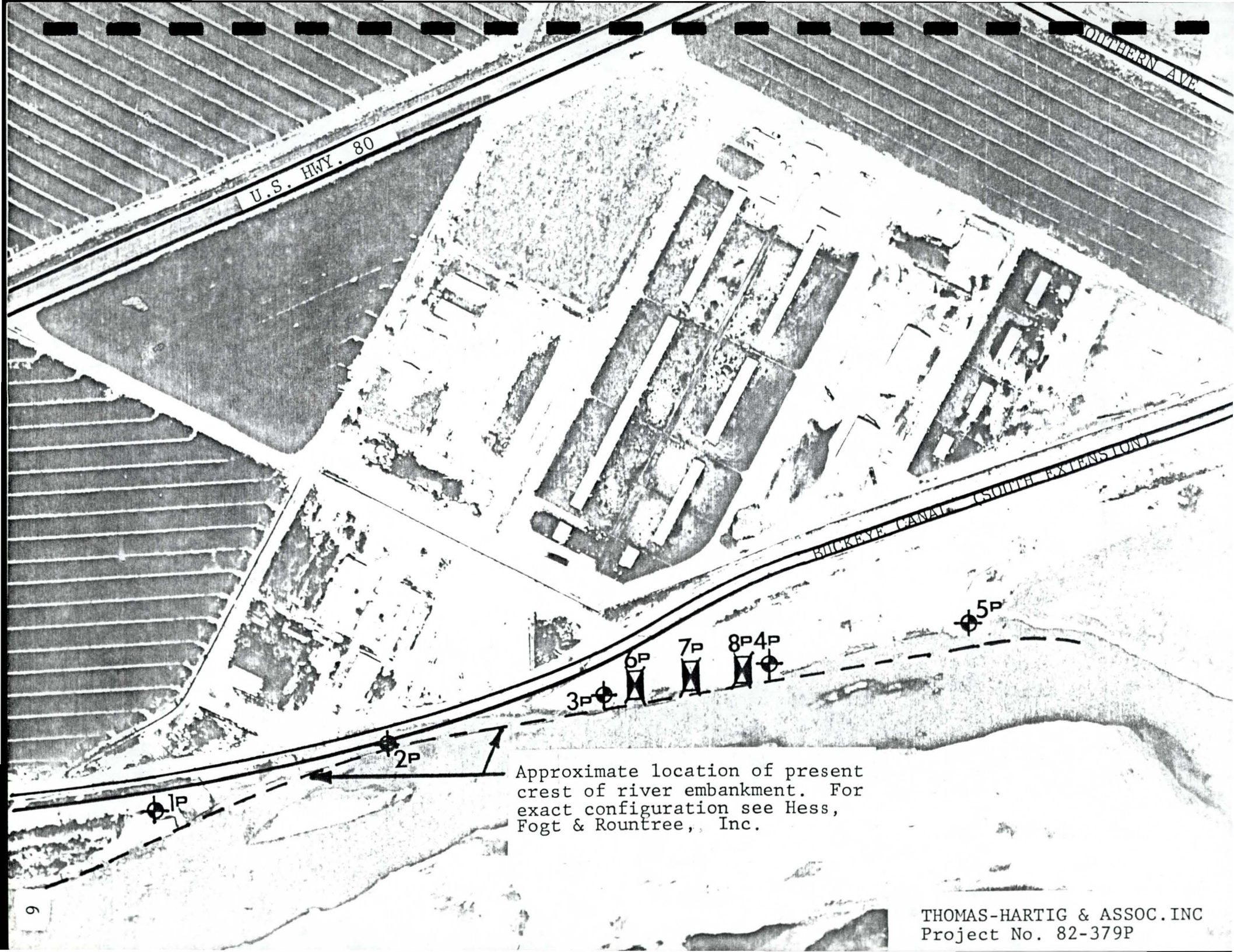

Approximate location of present crest of river embankment. For exact configuration see Hess, Fogt & Rountree, Inc.

THOMAS-HARTIG & ASSOC. INC
Project No. 82-379P

LEGEND

SOIL CLASSIFICATION ASTM: D2487

COARSE-GRAINED SOIL

MORE THAN 50% LARGER THAN 200 SIEVE SIZE

Symbol	Letter	DESCRIPTION	MAJOR DIVISIONS
	GW	WELL-GRADED GRAVELS OR GRAVEL-SAND MIXTURES, LESS THAN 5% - 200 FINES	GRAVELS More than half of coarse fraction is larger than No. 4 Sieve size.
	GP	POORLY-GRADED GRAVELS OR GRAVEL-SAND MIXTURES, LESS THAN 5% - 200 FINES	
	GM	SILTY GRAVELS, GRAVEL-SAND-SILT MIXTURES, MORE THAN 12% - 200 FINES	
	GC	CLAYEY GRAVELS, GRAVEL-SAND-CLAY MIXTURES, MORE THAN 12% - 200 FINES	
	SW	WELL-GRADED SANDS OR GRAVELLY SANDS, LESS THAN 5% - 200 FINES	SANDS More than half of coarse fraction is smaller than No. 4 sieve size.
	SP	POORLY-GRADED SANDS OR GRAVELLY SANDS, LESS THAN 5% - 200 FINES	
	SM	SILTY SANDS, SAND-SILT MIXTURES MORE THAN 12% - 200 FINES	
	SC	CLAYEY SANDS, SAND-CLAY MIXTURES MORE THAN 12% - 200 FINES	

FINE-GRAINED SOIL

MORE THAN 50% SMALLER THAN 200 SIEVE SIZE

Symbol	Letter	DESCRIPTION	MAJOR DIVISIONS
	ML	INORGANIC SILTS AND VERY FINE SANDS, ROCK FLOUR, SILTY OR CLAYEY FINE SANDS OR CLAYEY SILTS WITH SLIGHT PLASTICITY	SILTS AND CLAYS Liquid limit less than 50
	CL	INORGANIC CLAYS OF LOW TO MEDIUM PLASTICITY, GRAVELLY CLAYS, SANDY CLAYS, SILTY CLAYS, LEAN CLAYS	
	OL	ORGANIC SILTS AND ORGANIC SILT-CLAYS OF LOW PLASTICITY	
	MH	INORGANIC SILTS, MICACEOUS OR DIATOMACEOUS, FINE SANDY OR SILTY SOILS, ELASTIC SILTS	SILTS AND CLAYS Liquid limit greater than 50
	CH	INORGANIC CLAYS OF HIGH PLASTICITY, FAT CLAYS	
	OH	ORGANIC CLAYS OF MEDIUM TO HIGH PLASTICITY, ORGANIC SILTS	
	PT	PEAT AND OTHER HIGHLY ORGANIC SOILS	

log denotes visual approximation unless accompanied by mechanical analysis and Atterberg limits.

GRAIN SIZES

U.S. STANDARD SERIES SIEVE: 200, 50, 16, 4

CLEAR SQUARE SIEVE OPENINGS: ¾", 3", 6"

SILTS & CLAYS DISTINGUISHED ON BASIS OF PLASTICITY	SAND			GRAVEL		COBBLES	BOULDERS
	FINE	MEDIUM	COARSE	FINE	COARSE		

MOISTURE CONDITION (INCREASING MOISTURE ⟶)

DRY	SLIGHTLY DAMP	DAMP	MOIST	VERY MOIST	WET (SATURATED)
		(PL)			(LL)

DEFINITIONS

Penetration Resistance — Blows per foot using 'A' rod and 140 lb. hammer with 30 inch free fall unless otherwise noted.

N Standard Penetration Resistance (ASTM:D1586), 2.0 inch O.D. split barrel sampler.

C Continuous Penetration Resistance, 2.0 inch O.D. Bull Nose.

R Penetration Resistance, 2.42 inch I.D. Ring Sampler

Sample Type

R - Ring T - Shelby Tube S - Standard Split Barrel B - Block
G - Grab C - Cutting V - Vertical Face Cut

CONSISTENCY			RELATIVE DENSITY	
CLAYS & SILTS	BLOWS/FOOT*	STRENGTH‡	SANDS & GRAVELS	BLOWS/FOOT*
VERY SOFT	0-2	0-¼	VERY LOOSE	0-4
SOFT	2-4	¼-½	LOOSE	4-10
FIRM	4-8	½-1	MEDIUM DENSE	10-30
STIFF	8-16	1-2	DENSE	30-50
VERY STIFF	16-32	2-4	VERY DENSE	OVER 50
HARD	OVER 32	OVER 4		

* Number of blows of 140 pound hammer falling 30 inches to drive a 2 inch O.D. (1-⅜ inch I.D.) split spoon (ASTM D-1588).

‡ Unconfined compressive strength in tons/sq. ft. Read from a pocket penetrometer.

Project No. 82-379P

THOMAS-HARTIG & ASSOCIATES, INC.

SOIL BORING LOG

Station 1000 + 68; 285' RT

NO. 1P ELEV: 893.5 ft. SIZE OF HOLE 7" FIELD ENGR: JT DATE: 5-26-82

DEPTH FT	PENETRATION RESISTANCE BLOWS/FT C	PENETRATION RESISTANCE BLOWS/FT R & N	SAMPLE TYPE	DRY DENSITY PCF	MOISTURE CONTENT	DESCRIPTION	SOIL CLASSIFICATION	GRADATION WELL	GRADATION MED	GRADATION POOR	GRAIN SHAPE ANGULAR	GRAIN SHAPE SUBANGULAR	GRAIN SHAPE ROUNDED	GRAIN SHAPE SUBROUNDED	RELATIVE DENSITY LOW	RELATIVE DENSITY MED	RELATIVE DENSITY HIGH	PLASTICITY NONE	PLASTICITY LOW	PLASTICITY MEDIUM	PLASTICITY HIGH	CONSISTENCY SOFT	CONSISTENCY FIRM	CONSISTENCY STIFF	CONSISTENCY VERY STIFF	CONSISTENCY HARD	CEMENTATION NONE	CEMENTATION WEAK	CEMENTATION MEDIUM	CEMENTATION STRONG
1			C1		moist	Fine Sandy Silt; Brown	ML-			X		X		X					X				X	X			X			
2						Small amount clay	CL																							
3																														
4																														
5		11	R	94.3	19.2																									
6																														
7																														
8																														
9																														
10		24	R	107.4	14.3	Sand; Brown	SP-		X	X				X		X		X									X			
1			C2		damp	Small amount silt and gravel	SM																							
2																														
3																														
4						Sand predominately medium to																								
5		19	R	110.6	2.6	fine graded.																								
6																														
7																														
8																														
9																														
20		32	R	94.3	6.1																									
1																														
2			C3		wet	Sand & Gravel Mixture	SP-		X				X	X		X		X									X			
3						Brown	GP																							
4																														
5		21	S																											
6																														
7																														
8																														
9																														
30		12	S																											
1																														
2																														
3						C1 = 0 - 9 ft.																								
4						C2 = 9 - 21 ft.																								
5						C3 = 21 - 30 ft.																								
6																														
7																														
8																														
9																														
40																														

Stopped test drilling at: 30 feet

Ground water encountered: 21 feet

NOTE: Location and elevation from Hess, Fogt & Rountree.

Project No. 82-379P

THOMAS-HARTIG & ASSOCIATES, INC.

SOIL BORING LOG

Station 1005 + 00; 10' RT

NO. 2P ELEV: 894.4 ft. SIZE OF HOLE 7" FIELD ENGR: JT DATE: 5-26-82

DEPTH FT.	PENETRATION RESISTANCE BLOWS/FT. C	PENETRATION RESISTANCE BLOWS/FT. R & N	SAMPLE TYPE	DRY DENSITY PCF	MOISTURE CONTENT	DESCRIPTION	SOIL CLASSIFICATION	GRADATION WELL	GRADATION MED	GRADATION POOR	GRAIN SHAPE ANGULAR	GRAIN SHAPE SUBANGULAR	GRAIN SHAPE ROUNDED	GRAIN SHAPE SUBROUNDED	RELATIVE DENSITY LOW	RELATIVE DENSITY MED	RELATIVE DENSITY HIGH	PLASTICITY NONE	PLASTICITY LOW	PLASTICITY MEDIUM	PLASTICITY HIGH	CONSISTENCY SOFT	CONSISTENCY FIRM	CONSISTENCY STIFF	CONSISTENCY VERY STIFF	CONSISTENCY HARD	CEMENTATION NONE	CEMENTATION WEAK	CEMENTATION MEDIUM	CEMENTATION STRONG
1			C4		moist	Fine Sandy Silt; Brown	ML-			X		X		X					X				X	X			X			
2						Small amount clay.	CL																							
3																														
4					damp																									
5		6	R	88.4	11.9																									
6			C5																											
7																														
8																														
9					moist																									
10		9	R	88.3	26.0																									
1																														
2			C6																											
3																														
4																														
5		14	R	108.2	4.1	Sand; Brown	SP-		X	X				X		X		X								X				
6			C7		damp	Small amount silt and gravel	SM																							
7																														
8																														
9						Sand predominately medium to																								
20		23	R	102.3	3.7	fine graded.																								
1																														
2																														
3																														
4			C8		damp	Sand & Gravel Mixture	SP-		X				X	X		X		X								X				
5		41	S			Brown	GP																							
6					wet																									
7																														
8																														
9																														
30		35	S																											
1																														
2																														
3						C4 = 0 - 4 ft.																								
4						C5 = 4 - 11 ft.																								
5						C6 = 11 - 14 ft.																								
6						C7 = 14 - 23 ft.																								
7						C8 = 23 - 30 ft.																								
8																														
9																														
40																														

Stopped test drilling at: 30 feet

Ground water encountered: 25 feet

NOTE: Location and elevation from Hess, Fogt & Rountree

Project No. 82-379P

THOMAS-HARTIG & ASSOCIATES, INC.

SOIL BORING LOG

Station 1009 + 00; 36.5' RT

NO. 3P ELEV: 893.2 ft. SIZE OF HOLE 7" FIELD ENGR: JT DATE: 5-26-82

DEPTH FT	PENETRATION RESISTANCE BLOWS/FT C	PENETRATION RESISTANCE BLOWS/FT R & N	SAMPLE TYPE	DRY DENSITY PCF	MOISTURE CONTENT	DESCRIPTION	SOIL CLASSIFICATION	GRADATION WELL	GRADATION MED	GRADATION POOR	GRAIN SHAPE ANGULAR	GRAIN SHAPE SUBANGULAR	GRAIN SHAPE ROUNDED	GRAIN SHAPE SUBROUNDED	RELATIVE DENSITY LOW	RELATIVE DENSITY MED	RELATIVE DENSITY HIGH	PLASTICITY NONE	PLASTICITY LOW	PLASTICITY MEDIUM	PLASTICITY HIGH	CONSISTENCY SOFT	CONSISTENCY FIRM	CONSISTENCY STIFF	CONSISTENCY VERY STIFF	CONSISTENCY HARD	CEMENTATION NONE	CEMENTATION WEAK	CEMENTATION MEDIUM	CEMENTATION STRONG
1			C9		damp	Fill: Fine Sandy Silt	Fill																							
2						mixed with concrete and																								
3						miscellaneous rubble.																								
4																														
5		10	S																											
6																														
7																														
8																														
9																														
10		7	R	96.2	6.2																									
1																														
2																														
3			C10		damp	Sand; Brown	SP-		X	X				X	X		X									X				
4						Small amount silt and gravel	SM																							
5		27	R	106.7	1.3																									
6																														
7						Sand predominately medium to																								
8						fine graded.																								
9																														
20		30	R	98.3	13.3																									
1																														
2																														
3			C11		damp	Sand & Gravel Mixture	SP-		X				X	X		X		X								X				
4						Brown	GP																							
5		11	S		wet																									
6																														
7																														
8						Some clayey lenses																								
9																														
30																														
1		38	S																											
2																														
3						C9 = 0 - 12 ft.																								
4						C10 = 12 - 22 ft.																								
5						C11 = 22 - 31 ft.																								
6																														
7																														
8																														
9																														
40																														

Stopped test drilling at: 31 feet

Ground water encountered: 24 feet

NOTE: Location and elevation from Hess, Fogt & Rountree.

Project No. 82-379P

THOMAS-HARTIG & ASSOCIATES, INC.

SOIL BORING LOG

Station 1012 + 00; 4' RT

NO. 4P ELEV: 889.2 ft. SIZE OF HOLE 7" FIELD ENGR: JT DATE: 5-26-82

DEPTH FT.	PENETRATION RESISTANCE BLOWS/FT. C	R & N	SAMPLE TYPE	DRY DENSITY PCF	MOISTURE CONTENT	DESCRIPTION	SOIL CLASSIFICATION	GRADATION WELL	MED	POOR	GRAIN SHAPE ANGULAR	SUBANGULAR	ROUNDED	SUBROUNDED	RELATIVE DENSITY LOW	MED	HIGH	PLASTICITY NONE	LOW	MEDIUM	HIGH	CONSISTENCY SOFT	FIRM	STIFF	VERY STIFF	HARD	CEMENTATION NONE	WEAK	MEDIUM	STRONG
1			Cl2		damp	Fine Sandy Clay; Brown	CL			X		X		X					X	X				X	X		X			
2																														
3																														
4																														
5		20	R	96.6	23.3																									
6																														
7					moist																									
8																														
9																														
10		22	R	94.9	30.7																									
1						Some clean sand lenses																								
2						below 10 feet.																								
3																														
4																														
5		14	R	91.8	26.7																									
6																														
7																														
8			Cl3		damp	Sand & Gravel Mixture	SP-		X				X	X		X		X								X			
9						Brown	GP																							
20		17	S																											
1					wet																									
2																														
3																														
4																														
5		28	S																											
6																														
7																														
8																														
9																														
30						Cl2 = 0 - 17 ft.																								
1						Cl3 = 17 - 28 ft.																								
2																														
3																														
4																														
5																														
6																														
7																														
8																														
9																														
40																														

Stopped test drilling at: 28 feet

Ground water encountered: 20 feet

NOTE: Location and elevation from Hess, Fogt & Rountree.

Project No. 82-379P

THOMAS-HARTIG & ASSOCIATES, INC.

SOIL BORING LOG

Station 1016 + 48; 55' RT

NO. 5P ELEV: 885.0 ft. SIZE OF HOLE 7" FIELD ENGR: JT DATE: 5-26-82

DEPTH FT	PENETRATION RESISTANCE BLOWS/FT. C	PENETRATION RESISTANCE BLOWS/FT. R & N	SAMPLE TYPE	DRY DENSITY PCF	MOISTURE CONTENT	DESCRIPTION	SOIL CLASSIFICATION	GRADATION WELL	GRADATION MED	GRADATION POOR	GRAIN SHAPE ANGULAR	GRAIN SHAPE SUBANGULAR	GRAIN SHAPE ROUNDED	GRAIN SHAPE SUBROUNDED	RELATIVE DENSITY LOW	RELATIVE DENSITY MED	RELATIVE DENSITY HIGH	PLASTICITY NONE	PLASTICITY LOW	PLASTICITY MEDIUM	PLASTICITY HIGH	CONSISTENCY SOFT	CONSISTENCY FIRM	CONSISTENCY STIFF	CONSISTENCY VERY STIFF	CONSISTENCY HARD	CEMENTATION NONE	CEMENTATION WEAK	CEMENTATION MEDIUM	CEMENTATION STRONG
1			C14		sli	Fine Sandy Silt; Brown	ML-			X		X		X					X				X	X			X			
2					damp		CL																							
3			C15		moist	Fine Sandy Clay; Brown	CL			X		X		X					X	X				X	X		X			
4																														
5		22	R	96.1	26.1																									
6																														
7																														
8																														
9			C16		damp	Sand; Brown	SP-		X	X				X		X		X									X			
10		14	R	102.5	3.5	Small amount silt and gravel	SM																							
1																														
2																														
3						Sand predominately medium to																								
4						fine graded.																								
5		15	R	108.9	7.3																									
6																														
7					wet																									
8																														
9			C17		wet	Sand & Gravel Mixture	SP-		X				X	X		X		X									X			
20		47	S			Brown	GP																							
1																														
2																														
3																														
4																														
5		45	S																											
6																														
7																														
8																														
9																														
30																														
1																														
2						C14 = 0 - 2 ft.																								
3						C15 = 2 - 8 ft.																								
4						C16 = 8 - 18 ft.																								
5						C17 = 18 - 27 ft.																								
6																														
7																														
8																														
9																														
40																														

Stopped test drilling at: 27 feet

Ground water encountered: 16 feet

NOTE: Location and elevation from Hess, Fogt & Rountree.

Project No. 82-379P

THOMAS-HARTIG & ASSOCIATES, INC.

TEST PIT LOG

STATION 1009+80

(South end of rock rip-rap zone)

No: 6P Elev: top of crest Size of Hole backhoe Field Engr: TWT Date: 6-7-82

DEPTH FT.	SAMPLE TYPE	DRY DENSITY PCF	MOISTURE CONTENT	DESCRIPTION	SOIL CLASSIFICATION	GRADATION: WELL	GRADATION: MED	GRADATION: POOR	GRAIN SHAPE: ANGULAR	GRAIN SHAPE: SUBANGULAR	GRAIN SHAPE: ROUNDED	GRAIN SHAPE: SUBROUNDED	RELATIVE DENSITY: LOW	RELATIVE DENSITY: MED	RELATIVE DENSITY: HIGH	PLASTICITY: NONE	PLASTICITY: LOW	PLASTICITY: MEDIUM	PLASTICITY: HIGH	CONSISTENCY: SOFT	CONSISTENCY: FIRM	CONSISTENCY: STIFF	CONSISTENCY: VERY STIFF	CONSISTENCY: HARD	CEMENTATION: NONE	CEMENTATION: WEAK	CEMENTATION: MEDIUM	CEMENTATION: STRONG
				The top width of large rock																								
1				extended back from crest for																								
				a distance of approximately																								
2				20 feet																								
3																												
4																												
5																												
6																												
7																												
8																												
9																												
10																												
11																												
12																												
13																												
14																												
15																												
16																												
17																												
18																												
19																												
20																												

Stopped at: 4 feet

Ground water encountered: none

Project No. 82-379P

THOMAS-HARTIG & ASSOCIATES, INC.

TEST PIT LOG

STATION 1010+70

(approximate center of rock rip-rap zone)

No: 7P Elev: top of crest Size of Hole backhoe Field Engr: TWT Date: 6-7-82

DEPTH FT.	SAMPLE TYPE	DRY DENSITY PCF	MOISTURE CONTENT	DESCRIPTION	SOIL CLASSIFICATION	GRADATION: WELL	GRADATION: MED	GRADATION: POOR	GRAIN SHAPE: ANGULAR	GRAIN SHAPE: SUBANGULAR	GRAIN SHAPE: ROUNDED	GRAIN SHAPE: SUBROUNDED	RELATIVE DENSITY: LOW	RELATIVE DENSITY: MED	RELATIVE DENSITY: HIGH	PLASTICITY: NONE	PLASTICITY: LOW	PLASTICITY: MEDIUM	PLASTICITY: HIGH	CONSISTENCY: SOFT	CONSISTENCY: FIRM	CONSISTENCY: STIFF	CONSISTENCY: VERY STIFF	CONSISTENCY: HARD	CEMENTATION: NONE	CEMENTATION: WEAK	CEMENTATION: MEDIUM	CEMENTATION: STRONG
				The top width of large rocks																								
1				extended back from the crest																								
				for a distrance of																								
2				approximately 14 feet																								
3																												
4																												
5																												
6																												
7																												
8																												
9																												
10																												
11																												
12																												
13																												
14																												
15																												
16																												
17																												
18																												
19																												
20																												

Stopped at: 4 feet

Ground water encountered: none

Project No. 82-379P

THOMAS-HARTIG & ASSOCIATES, INC.

TEST PIT LOG

STATION 1011+70

(North end of rock rip-rap zone)

No: 8P Elev: Top of crest Size of Hole backhoe Field Engr: TWT Date: 6-7-82

DEPTH FT.	SAMPLE TYPE	DRY DENSITY PCF	MOISTURE CONTENT	DESCRIPTION	SOIL CLASSIFICATION	GRADATION: WELL	GRADATION: MED	GRADATION: POOR	GRAIN SHAPE: ANGULAR	GRAIN SHAPE: SUBANGULAR	GRAIN SHAPE: ROUNDED	GRAIN SHAPE: SUBROUNDED	RELATIVE DENSITY: LOW	RELATIVE DENSITY: MED	RELATIVE DENSITY: HIGH	PLASTICITY: NONE	PLASTICITY: LOW	PLASTICITY: MEDIUM	PLASTICITY: HIGH	CONSISTENCY: SOFT	CONSISTENCY: FIRM	CONSISTENCY: STIFF	CONSISTENCY: VERY STIFF	CONSISTENCY: HARD	CEMENTATION: NONE	CEMENTATION: WEAK	CEMENTATION: MEDIUM	CEMENTATION: STRONG
				The top width of large																								
1				rocks extended back from																								
				the crest for a distance																								
2				of approximately 10 feet.																								
3																												
4																												
5																												
				NOTE: The size of the rock																								
6				rip-rap was less than at																								
				locations 6P and 7P																								
7																												
8																												
9																												
10																												
11																												
12																												
13																												
14																												
15																												
16																												
17																												
18																												
19																												
20																												

Stopped at: 4 feet

Ground water encountered: none

Project No. 82-379P

THOMAS-HARTIG & ASSOCIATES, INC.

LABORATORY RESULTS

Dry Density and Field Moisture

Gradation and Plasticity Tests

Direct Shear Tests

Compression Tests

REPORT ON LABORATORY TESTS

SAMPLE: Date 6-11-82

Source Perryville Acres

Type Driven Ring Samples

Material Subsoil

Sampled By Thompson

TESTED: Dry Density and Field Moisture

RESULTS:

Sample	Dry Density	*Field Moisture
1P; 4-5'	94.3 pcf	19.2%
9-10'	107.4 pcf	14.3%
14-15'	110.6 pcf	2.6%
19-20'	94.3 pcf	6.1%
2P; 4-5'	88.4 pcf	11.9%
9-10'	88.3 pcf	26.0%
14-15'	108.2 pcf	4.1%
19-20'	102.3 pcf	3.7%
3P; 9-10'	96.2 pcf	6.2%
14-15'	106.7 pcf	1.3%
19-20'	98.3 pcf	13.3%
4P; 4-5'	96.6 pcf	23.3%
9-10'	94.9 pcf	30.7%
14-15'	91.8 pcf	26.7%
5P; 4-5'	96.1 pcf	26.1%
9-10'	102.5 pcf	3.5%
14-15'	108.9 pcf	7.3%

*Percentage of dry weight.

Project No. 2-379P

THOMAS-HARTIG & ASSOCIATES, INC.

REPORT ON LABORATORY TESTS

SAMPLE: Date 6-11-82

Source Perryville Acres

Type Auger Drill Cuttings

Material Subsoils

Sampled By Thompson

TESTED: Gradation & Plasticity Index

RESULTS:

Sample	LL	PI	Sieve Size - Accum. % Passing 200	100	50	30	16	8	4	3/4"	1"	2"	3"	* Class
2P; 0-3.5'	28	1	81	91	94	96	97	98	99	100				ML
2P; 3.5-11'	27	4	86	98	99	100								ML CL
2P; 11-14'	29	4	86	92	96	99	100							ML CL
2P; 14-23'	-	N.P.	9	17	51	88	95	96	97	99	100			SM SP
2P; 23-30'	-	N.P.	12	22	44	59	61	62	63	66	73	100		SM SP
5P; 0-2'	24	2	63	83	95	99	100							ML
5P; 2-8'	31	13	69	79	87	97	98	99	100					CL
5P; 8-18'	-	N.P.	7	11	34	81	94	96	97	100				SM SP
5P; 18-28'	-	N.P.	7	9	15	35	67	82	89	99	100			SM SP

* Unified Soil Classification

Project No. 82-379P

THOMAS-HARTIG & ASSOCIATES, INC.

REPORT ON LABORATORY TESTS

SAMPLE: Date 6/15/82

Source: Perryville Acres; Test boring 2P; 4'-5'

Type: Driven ring sample

Material: Subsoil; 88.4 pcf dry density

Sampled By: Thompson

TESTED: Direct Shear

RESULTS:

Friction Angle (Ø) = 27.8° Cohesion (c) = Nil

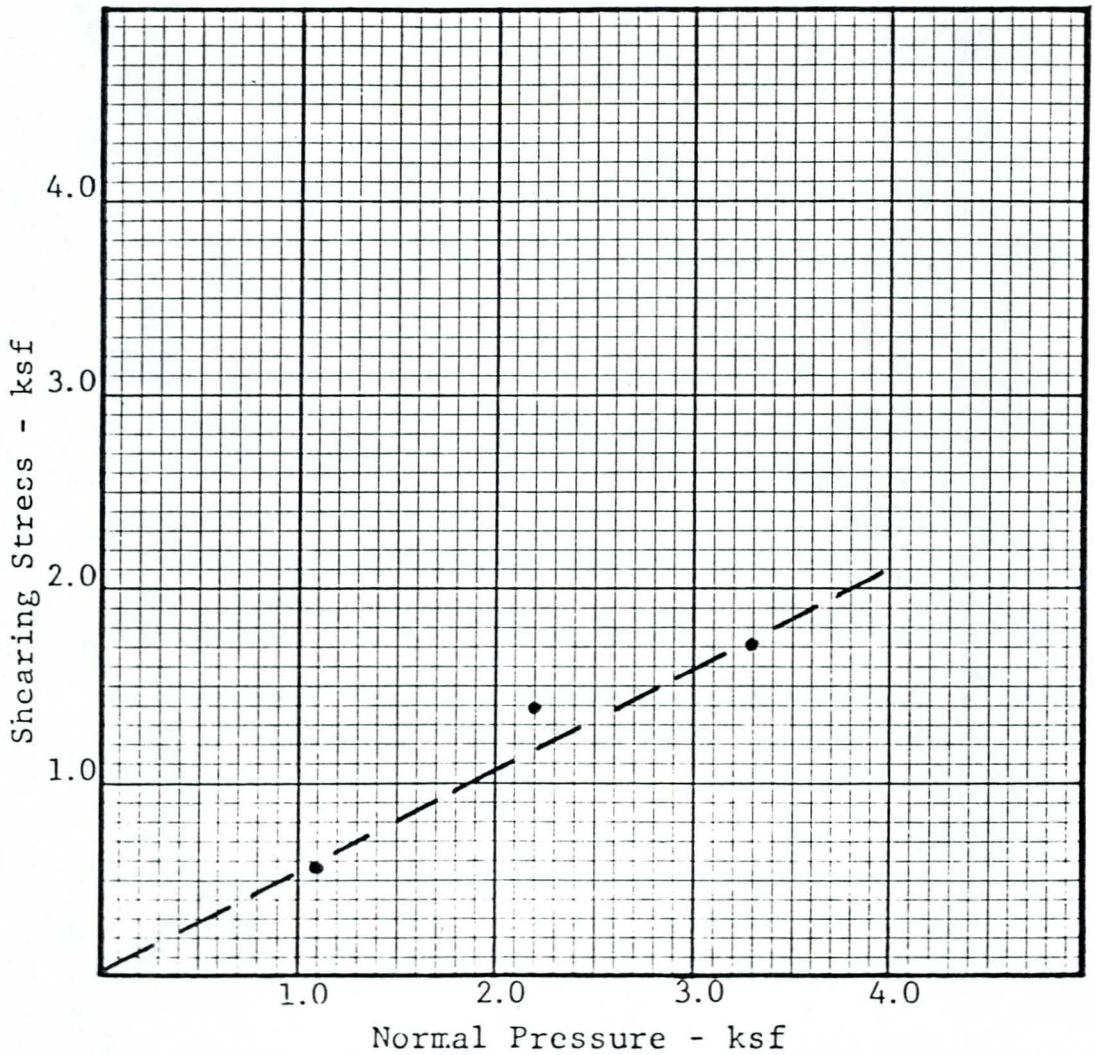

Project No. 82-379

THOMAS-HARTIG & ASSOCIATES, INC

REPORT ON LABORATORY TESTS

SAMPLE: Date 6/15/82

Source Perryville Acres: Test boring 2P; 9'-10'

Type Driven ring sample

Material Subsoil; 88.3 pcf dry density

Sampled By Thompson

TESTED: Direct Shear

RESULTS:

Friction Angle (Ø) = 31.4° Cohesion (c) = nil

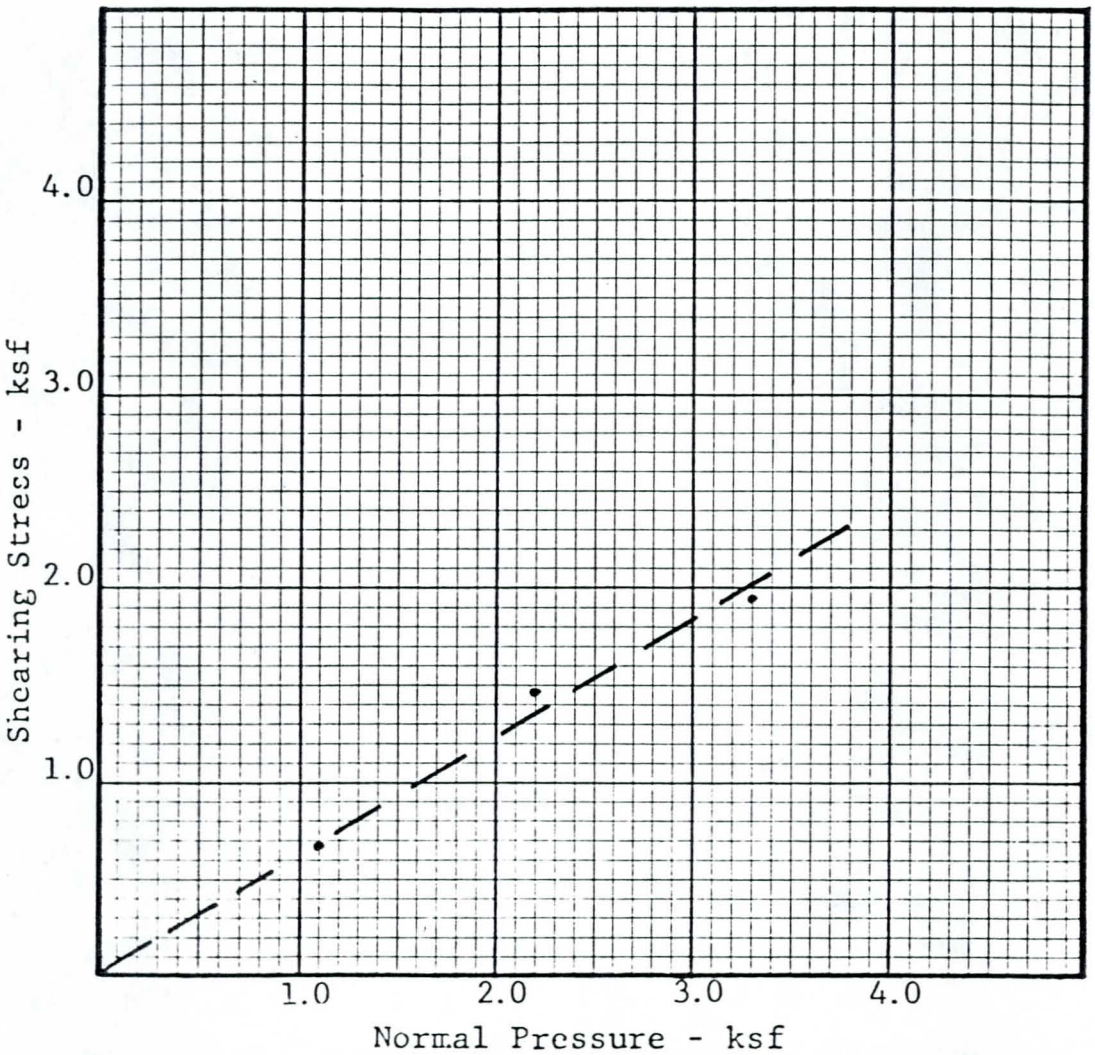

Project No. 82-379

THOMAS-HARTIG & ASSOCIATES, INC.

REPORT ON LABORATORY TESTS

SAMPLE: Date 6/15/82

Source Perryville Acres: Test boring 4P; 14'-15;

Type Driven ring sample

Material Subsoil; 91.8 pcf dry density

Sampled By Thompson

TESTED: Direct Shear

RESULTS:

Friction Angle (Ø) = 33.8° Cohesion (c) = 0.2 ksf

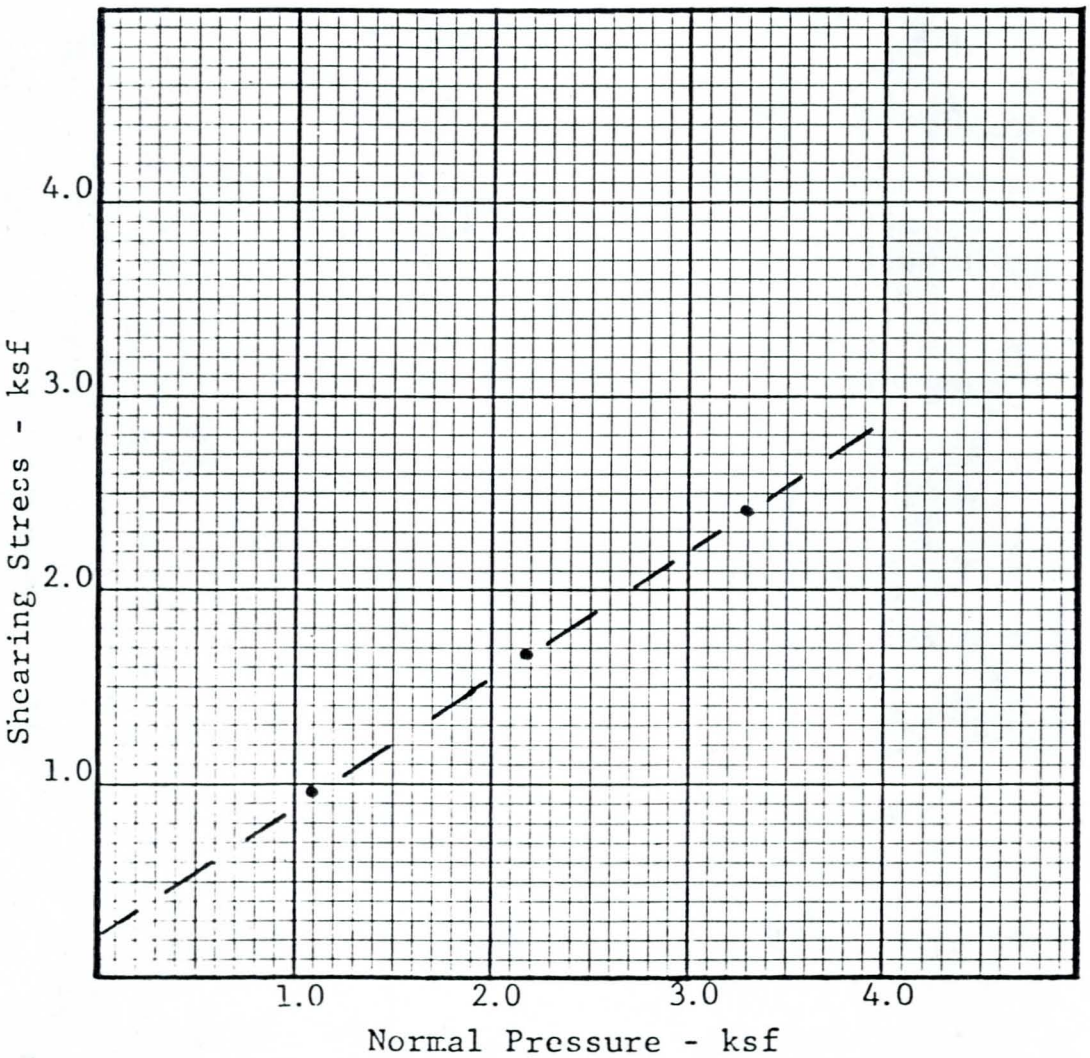

Project No. 82-379

THOMAS-HARTIG & ASSOCIATES, INC.

REPORT ON LABORATORY TESTS

SAMPLE: Date 6-11-82

Source Test Borings - Perryville Acres

Type Driven Ring Samples

Material Subsoil

Sampled By Thompson

TESTED: Percent Compression

RESULTS:

Sample	Dry Density	Field Moisture	Surcharge Pressure	Percent Compression In-Situ	Percent Compression After Soaking
2P; 4-5'	88.4 pcf	11.9%	500 psf	nil	2.4%
2P, 9-10'	88.3 pcf	26.0%	1000 psf	nil	4.2%
4P, 14-15'	91.8 pcf	26.7%	1500 psf	nil	1.1%

Project No. 82-379P

THOMAS-HARTIG & ASSOCIATES, INC.