Reference
DACW09-78-B-0011

PS-16

Property of
Flood Control District of MC Library
Please Return to
2801 W. Durango
Phoenix, AZ 85009

SPECIFICATIONS

for

INDIAN BEND WASH

INDIAN SCHOOL PARK

AND

GREENBELT TRAIL SYSTEM

MARICOPA COUNTY, ARIZONA

Gila River Basin, Arizona

Appropriation: 96x3122 Construction General
Corps of Engineers, Civil

96x8862 Contributed Funds, Other

U S Army Engineer District
Los Angeles
Corps of Engineers

A680.507

RECEIVED

MAY 24'78

1	CH ENG		HYDRO
	ASST		LMgt
	ADMIN		SUSP
	C & O	3	FILE
2	ENGR		DESTROY
REMARKS			

Reference DACW09-78-B-0011-0008

Bid Opening Date: 26 May 1978

U. S. ARMY ENGINEER DISTRICT, LOS ANGELES
P. O. Box 2711
Los Angeles, California 90053

19 May 1978

AMENDMENT NO. 8

I. Specifications, Reference No. DACW09-78-B-0011, covering "Indian Bend Wash, Indian School Park and Greenbelt Trail System, Maricopa County, Gila River Basin, Arizona," and the drawings are modified as follows:

33. PART I, SPECIAL PROVISIONS.

33.1 Page S-1, paragraph 1.1, to the Completion Schedule add:

Fill In Required Fill Area 1 September 1978

34. SECTION 3A, EARTHWORK.

34.1 Page 3A-1, paragraph 3.3.2, line 3. Delete "site of the work" and insert: site of the work or placed in the designated landfill site.

34.2 Page 3A-2.

34.2.1 Paragraph 3.6, lines 4 and 5. Delete sentence "Material shall be disposed of as directed."

34.2.2 Paragraph 4, line 10. Delete "in the waste areas shown" and insert: as specified herein.

34.2.3 After paragraph 4, add:

4A. DISPOSAL AREAS.

4A.1 General. Disposal Areas are designated as Haul Sites 1, 2, 3, and Salt River Landfill Disposal Site. These disposal areas may be used at the option of the Contractor for disposal of materials as specified hereinafter.

4A-2 Haul Sites 1, 2, and 3 . Material placed in Haul Sites 1, 2, and 3 shall be clean material conforming to the requirements for fills and embankments. Material may be placed in uniform layers not exceeding 36 inches in depth within limits as indicated. Compaction other than that obtained by controlled movement of the construction equipment will not be required.

4A-3 SALT RIVER LANDFILL DISPOSAL SITE. Salt River Landfill Disposal Site is located approximately 6 1/2 miles from the project site near the intersection of McDowell Road and Phoenix-Payson Beeline Highway next to Salt River. Material shall consist of any unsuitable material for haul sites, pavement, or any organic and inorganic trash. The size or shape of the material to be disposed shall be such that no special handling is required. The operator will provide the Contractor, without charge, a weigh ticket for each acceptable load. Weigh tickets shall be presented by the Contractor to the Contracting Officer at the end of each days work. Person to contact is Mr. David Easchief, Salt River Landfill Project, Route 1 - Box 216, Scottsdale, Arizona, Telephone (602) 949-7234.

Am. 8

35. DRAWINGS.

35.1 Drawing File No. 246/70.

35.1.1 Details 3 L35 L36 and 4 L35 L36 add: AND CERAMIC LETTERS.

35.1.2 Under symbol 5-9 L35 L36

CERAMIC SIGN

35.1.3 Details 7 L35 L36, 9 L35 L36, 10 L35 L36.

These signs including lettering and figures are made of ceramic.

35.2 Drawing File No. 246/71. Add NOTE to drawing:

NOTE: The entire park directory sign is made of ceramic, including lettering and figures.

II. This amendment shall be attached to and shall become a part of the specifications.

HUGH G. ROBINSON
Colonel, Corps of Engineers
District Engineer

NOTICE: Bidders are required to acknowledge receipt of this amendment on the Bid Form, in the space provided, or by separate letter or telegram prior to opening of bids. Failure to acknowledge all amendments may cause rejection of the bid.

Necessity
Verified

Am. 8
ARMY - C. of E. - Los Angeles

Reference DACW09-78-B-0011-0004

Bid Opening Date: 10 May 1978

U. S. ARMY ENGINEER DISTRICT, LOS ANGELES
P. O. Box 2711
Los Angeles, California 90053

4 May 1978

AMENDMENT NO. 4

I. Specifications, Reference No. DACW09-78-B-0011, covering "Indian Bend Wash, Indian School Park and Greenbelt Trail System, Maricopa County, Gila River Basin, Arizona," are modified as follows:

21. INVITATION FOR BIDS.

21.1 Page I-3, paragraph 10. Delete the entire paragraph and insert:

10. HAND CARRIED BIDS. Hand carried bids shall be deposited in Room 1030 (South Tower), 2721 North Central Avenue, Phoenix, Arizona prior to the time and date set for opening of bids.

II. This amendment shall be attached to and shall become a part of the specifications.

FLOOD CONTROL DISTRICT
RECEIVED
MAY 08 '78

HUGH G. ROBINSON
Colonel, Corps of Engineers
District Engineer

1	ENG		HYDRO
			LMgt
			SUSP
		3	FILE
2	NGR		DESTROY
REMARKS			

NOTICE: Bidders are required to acknowledge receipt of this amendment on the Bid Form, in the space provided, or by separate letter or telegram prior to opening of bids. Failure to acknowledge all amendments may cause rejection of the bid.

Necessity
Verified

Am. 4
ARMY - C. of E. - Los Angeles

Reference DACW09-78-B-0011-0005

Bid Opening Date: 26 May 1978

U. S. ARMY ENGINEER DISTRICT, LOS ANGELES
P. O. BOX 2711
Los Angeles, California 90053

8 May 1978

AMENDMENT NO. 5

I. Specifications, Reference No. DACW09-78-B-0011, covering "Indian Bend Wash, Indian School Park and Greenbelt Trail System, Maricopa County, Gila River Basin, Arizona," are modified as follows:

22. INVITATION FOR BIDS.

22.1 Page I-1. Delete the bid opening date "10 May 1978" and insert: 26 May 1978.

NOTE: This amendment is in confirmation of telegraphic amendment dated 8 May 1978.

II. This amendment shall be attached to and shall become a part of the specifications.

HUGH G. ROBINSON
Colonel, Corps of Engineers
District Engineer

NOTICE: Bidders are required to acknowledge receipt of this amendment on the Bid Form, in the space provided, or by separate letter or telegram prior to opening of bids. Failure to acknowledge all amendments may cause rejection of the bid.

SMA
Necessity
Verified

FLOOD CONTROL DISTRICT
RECEIVED

MAY 15'78

1	CH ENG		HYDRO
2	ASST		LMgt
	ADMIN		SUSP
	C & O	5	FILE
3	ENGR		DESTROY
4	NPK		
REMARKS			

Am. 5
ARMY - C. of E. - Los Angeles

FLOOD CONTROL DISTRICT
RECEIVED

MAY 15 '78

Reference DACW09-78-B-0011-0006

Bid Opening Date: 26 May 1978

	CH ENG		HYDRO
	ASST		LMgt
	ADMIN		SUSP
	D & O		FILE
	INSP		DESTROY

REMARKS

U. S. ARMY ENGINEER DISTRICT, LOS ANGELES
P. O. Box 2711
Los Angeles, California 90053

9 May 1978

AMENDMENT NO. 6

I. Specifications, Reference No. DACW09-78-B-0011, covering "Indian Bend Wash, Indian School Park and Greenbelt Trail System, Maricopa County, Gila River Basin, Arizona," are modified as follows:

23. Wage Determination Decision. Following Standard Form 23, insert Modification No. 8, dated 28 April 1978, to Rates of Wages, Decision No. AZ 77-5058.

24. INVITATION TO BIDS.

24.1 Page I-3, paragraphs 15, 15.1, and 15.2. Delete entire paragraphs.

25. PART I, SPECIAL PROVISIONS.

25.1 Page S-8. After paragraph 13 add:

14. CONTINUING CONTRACTS (1977 OCT OCE).

14.1 This is a continuing contract, as authorized by Section 10 of the River and Harbor Act of September 22, 1922 (33 U.S. Code 261). The payment of some portion of the contract price is dependent upon reservations of funds from future appropriations. The responsibilities of the Government are limited by this clause notwithstanding any contrary provision of the "Payments to Contractor" clause or any other clause of this contract.

14.2 The sum of $2,000,000.00 has been reserved for this contract and is available for payments to the Contractor during the current fiscal year. It is expected that Congress will make appropriations for future fiscal year from which additional funds will be reserved for this contract.

14.3 Failure to make payments in excess of the amount currently reserved, or that may be reserved from time to time, shall not entitle the Contractor to a price adjustment under the terms of this contract except as specifically provided in paragraphs 14.6 thru 14.9 below. No such failure shall constitute a breach of this contract, except that this provision shall not bar a breach-of contract action if an amount finally determined to be due as a termination allowance remains unpaid for one year due solely to a failure to reserve sufficient additional funds therefor.

14.4 The Government may at any time reserve additional funds for payments under the contract if there are funds available for such purpose. The Contracting Officer will promptly notify the Contractor in writing of any additional funds reserved for the contract.

14.5 If earnings will be such that funds reserved for the contract will be exhausted before the end of any fiscal year, the Contractor shall give written notice to the Contracting Officer of the estimated date of exhaustion and the amount of additional funds which will be needed to meet payments due or to become due under the contract during that fiscal year. This notice shall be given not less than 45 nor more than 60 days prior to the estimated date of exhaustion.

14.6 No payments will be made after exhaustion of funds except to the extent that additional funds are reserved for the contract. The Contractor shall be entitled to simple interest on any payment that the Contracting Officer determines was actually earned under the terms of the contract and would have been made except for exhaustion of funds. Interest shall be computed from the time such payment would otherwise have been made until actually or constructively made, and shall be at the rate established by the Secretary of the Treasury pursuant to Public Law 92-41, 85 STAT 97, for the Renegotiation Board, as in effect on the first day of the delay in such payment.

Am. 6

14.7 Any suspension, delay, or interruption of work arising from exhaustion or anticipated exhaustion of funds shall not constitute a breach of this contract and shall not entitle the Contractor to any price adjustment under the "Suspension of Work" clause or in any other manner under this contract.

14.8 An equitable adjustment in performance time shall be made for any increase in the time required for performance of any part of the work arising from exhaustion of funds or the reasonable anticipation of exhaustion of funds.

14.9 If, upon the expiration of sixty (60) days after the beginning of the fiscal year following an exhaustion of funds, the Government has failed to reserve sufficient additional funds to cover payments otherwise due, the Contractor, by written notice delivered to the Contracting Officer at any time before such additional funds are reserved, may elect to treat his right to proceed with the work as having been terminated. Such a termination shall be considered a termination for the convenience of the Government.

14.10 If at any time it becomes apparent that the funds reserved for any fiscal year are in excess of the funds required to meet all payments due or to become due the Contractor because of work performed and to be performed under the contract during the fiscal year, the Government reserves the right, after notice to the Contractor, to reduce said reservation by the amount of such excess.

II. This amendment shall be attached to and shall become a part of the specifications.

HUGH G. ROBINSON
Colonel, Corps of Engineers
District Engineer

1 Incl
Rates of Wages, Mod. No. 8

NOTICE: Bidders are required to acknowledge receipt of this amendment on the Bid Form, in the space provided, or by separate letter or telegram prior to opening of bids. Failure to acknowledge all amendments may cause rejection of the bid.

SMA
Necessity
Verified

Am. 6
ARMY - C. of E. - Los Angeles

DECISION #AZ77-5058 - Mod. #8 (42 FR 31056 - June 17, 1977) Statewide, Arizona					
Change:					
Painters: (Flagstaff Area):					
Zone A: From Flagstaff Courthouse to 20 miles:					
Brush; Soft Floor Layers	$10.70	.90	.60		.20
Brush, steel and bridge	11.20	.90	.60		.20
Spray	11.15	.90	.60		.20
Spray, steel and bridge	11.70	.90	.60		.20
Zone B: 20-35 miles from Courthouse in Flagstaff:					
Brush; Soft Floor Layers	11.45	.90	.60		.20
Brush, steel and bridge	11.95	.90	.60		.20
Spray	11.85	.90	.60		.20
Spray, steel and bridge	12.45	.90	.60		.20
Zone C: 35-80 miles from Courthouse in Flagstaff:					
Brush; Soft Floor Layers	12.45	.90	.60		.20
Brush, steel and bridge	12.95	.90	.60		.20
Spray	12.85	.90	.60		.20
Spray, steel and bridge	13.45	.90	.60		.20
Zone D: 80 miles and over from Courthouse in Flagstaff:					
Brush; Soft Floor Layers	12.70	.90	.60		.20
Brush, steel and bridge	13.20	.90	.60		.20
Spray	13.10	.90	.60		.20
Spray, steel and bridge	13.70	.90	.60		.20
Sprinkler Fitters	12.74	.75	1.05		.08

FLOOD CONTROL DISTRICT
RECEIVED

MAY 22'78

Reference DACW09-78-B-0011-0007

Bid Opening Date: 26 May 1978

/	CH ENG		HYDRO
	ASST		LMgt
	ADMIN		SUSP
	C & O	3	FILE
2	ENGR		DESTROY

REMARKS:

U. S. ARMY ENGINEER DISTRICT, LOS ANGELES
P. O. Box 2711
Los Angeles, California 90053

16 May 1978

AMENDMENT NO. 7

1. Specifications, Reference No. DACW09-78-B-0011, covering "Indian Bend Wash, Indian School Park and Greenbelt Trail System, Maricopa County, Gila River Basin, Arizona," and Amendment No. 6, dated 9 May 1978 and the drawings are modified as follows:

26. INVITATION FOR BIDS.

26.1 Delete page I-5 and insert the inclosed page I-5 (Revised).

27. CONSTRUCTION CONTRACT.

27.1 Index of General Provisions.

27.1.1 Delete "74. Local Affirmative Action Plan" and insert: 74. Standard Federal Equal Employment Opportunity Construction Contract Specifications.

27.2 Delete pages 23 and 24 and insert the inclosed pages 23 (Revised), 24 (Revised), 25, 26, and 27.

28. PART I, SPECIAL PROVISIONS.

28.1 Page S-1, paragraph 1.2, line 2. Delete "26 May 1978 and insert: 9 June 1978.

29. SECTION 4K, REINFORCED MASONRY.

29.1 Page 4K-4.

29.1.1 Paragraph 7.7.1. Delete "ASTM C331" and insert: ASTM C331 or C33.

29.1.2 After paragraph 7.7.3.1, insert: 7.7.3.2 Concrete masonry units shall be manufactured with the manufacturers' standard intregal color admixture. The finish color shall be spanish brown as supplied by Superlite Builders Supply Inc., Phoenix, Arizona or approved equal. Approved standard colors from other manufacturers' or suppliers will be compared with the Federal standard color indicated or superlite spanish brown color.

30. SECTION 16B, ELECTRICAL-DISTRIBUTION AND PARK-LIGHTING SYSTEM; UNDERGROUND.

30.1 Page 16B-8, paragraph 11.1.3, lines 2 and 3. Delete sentence "Breakers shall have *** amperes at 208V." and insert: Breakers shall have a minimum interrupting capacity as shown on the drawings.

30.2 Page 16B-9.

30.2.1 Paragraph 17, lines 1 and 2. Delete "black baked acrylic enamel finish" and insert: prime grey finish and field finish painted black as specified in section: PAINTING, GENERAL.

30.2.2 Paragraph 18, line 2. Delete "black baked acrylic enamel finish" and insert: prime grey finish and field finish painted black as specified in section: PAINTING, GENERAL.

30.3 Page 16B-9, paragraph 19. Delete the entire paragraph and insert:

19. Multi-purpose field lighting poles shall be nominal 100 foot steel, round tapered, or sectional telescoping poles with welded joints. Structural calculations shall be furnished by Registered Structural Engineer showing adequacy of the pole design for the number of fixtures specified, including all provisions for future additions, under an isotach zone rating of 80 NPH. Allowable steel stresses shall be per AISC steel construction manual.

Poles shall be prime grey finish inside and outside, and field finish painted shall conform to the applicable requirements as specified in section: PAINTING, GENERAL. Each pole shall be provided with (6) 2 1/4 inch by 96 inch galvanized steel anchor bolts, threaded at the top end. The steel plate base flange shall be provided with an external grounding nut. Steps of 3/4" X 6" galvanized steel carriage bolts threaded into forged nuts welded to pole shall begin at 12 feet from the base and be spaced at 15" intervals on alternating sides of pole. Safety cable for climbing and handrails for platforms shall be designed, furnished and installed in accordance with the applicable OSHA Standards.

31. DRAWINGS.

31.1 Drawing File No. 246/111.

31.1.1 To the drawing add the following note:

NOTE. 1. Multi-purpose field lighting standard "AA" located between field 1 & 2 shall have 12 fixtures as shown, plus all platforms and supports for 12 additional fixtures, to be added in future, on reverse side. All other "AA" poles have no provisions for future additions.

2. Multi-purpose field lighting standard "BB" located between fields 1 & 2 shall have 24 fixtures as shown, plus all platforms and supports for additional luminaires, to be added in future on reverse side.

32. AMENDMENT NO. 6.

32.1 Modification 25.1

32.1.1 Line 1. Delete "paragraph 13" and insert: paragraph 14.

32.1.2 Delete paragraph numbers "14, 14.1, 14.2, 14.3, 14.4, 14.5, 14.6, 14.7, 14.8, 14.9, and 14.10" and insert respectively: 15, 15.1, 15.2, 15.3, 15.4, 15.5, 15.6, 15.7, 15.8, 15.9, and 15.10.

II. This amendment shall be attached to and shall become a part of the specifications.

HUGH G. ROBINSON
Colonel, Corps of Engineers
District Engineer

2 Incl
1. Pg. I-5 (Revised)
2. Constr. Contract
Pgs. 23 (Revised), 24 (Revised)
25, 26, and 27

NOTICE: Bidders are required to acknowledge receipt of this amendment on the Bid Form, in the space provided, or by separate letter or telegram prior to opening of bids. Failure to acknowledge all amendments may cause rejection of the bid.

SMA.
Necessity
Verified

Am. 7
ARMY - C. of E. - Los Angeles

NOTICE OF REQUIREMENT FOR AFFIRMATIVE ACTION TO ENSURE EQUAL EMPLOYMENT OPPORTUNITY (EXECUTIVE ORDER 11246)

1. The Offeror's or Bidder's attention is called to the "Equal Opportunity Clause" and the "Standard Federal Equal Employment Opportunity Construction Contract Specifications" set forth herein.

2. The goals and timetables for minority and female particpation, expressed in percentage terms for the Contractor's aggregate workforce in each trade on all construction work in the covered area, are as follows:

Timetables	Goals for minority participation for each trade	Goals for female participation in each trade
4/1/78 until 3/31/79	25.0 to 30.0	3.1
4/1/79 until 3/31/80	25.0 to 30.0	5.0
4/1/80 until 3/31/81	25.0 to 30.0	6.9

These goals are applicable to all the Contractor's construction work (whether or not it is Federal or federally assisted) performed in the covered area.

The Contractor's compliance with the Executive Order and the regulations in 41 CFR Part 60-4 shall be based on its implementation of the Equal Opportunity Clause, specific affirmative action obligations required by the specifications set forth in 41 CFR 60-4.3(a), and its efforts to meet the goals established for the geographical area where the contract resulting from this solicitation is to be performed. The hours of minority and female employment and training must be substantially uniform throughout the length of the contract, and in each trade, and the contractor shall make a good faith effort to employ minorities and women evenly on each of its projects. The transfer of minority or female employees or trainees from Contractor to Contractor or from project to project for the sole purpose of meeting the Contractor's goals shall be a violation of the contract, the Executive Order and the regulations in 41 CFR Part 60-4. Compliance with the goals will be measured against the total work hours performed.

3. The Contractor shall provide written notification to the Director of the Office of Federal Contract Compliance Programs within 10 working days of award of any construction subcontract in excess of $10,000 at any tier for construction work under the contract resulting from this solicitation. The notification shall list the name, address and telephone number of the subcontractor; employer identification number; estimated dollar amount of the subcontract; estimated starting and completion dates of the subcontract; and the geographical area in which the contract is to be performed.

4. As used in this Notice, and in the contract resulting from this solicitation, the "covered area" is The City of Scottsdale, Maricopa County, Arizona.

74. STANDARD FEDERAL EQUAL EMPLOYMENT OPPORTUNITY CONSTRUCTION CONTRACT SPECIFICATIONS (EXECUTIVE ORDER 11246)

1. As used in these specifications:

a. "Covered area" means the geographical area described in the solicitation from which this contract resulted;

b. "Director" means Director, Office of Federal Contract Compliance Programs, United States Department of Labor, or any person to whom the Director delegates authority;

c. "Employer identification number" means the Federal Social Security number used on the Employer's Quarterly Federal Tax Return, U.S. Treasury Department Form 941.

d. "Minority" includes:

(i) Black (all persons having origins in any of the Black African racial groups not of Hispanic origin);

(ii) Hispanic (all persons of Mexican, Puerto Rican, Cuban, Central or South American or other Spanish Culture or origin, regardless of race);

(iii) Asian and Pacific Islander (all persons having origins in any of the original peoples of the Far East, Southeast Asia, the Indian Subcontinent, or the Pacific Islands); and

(iv) American Indian or Alaskan Native (all persons having origins in any of the original peoples of North America and maintaining identifiable tribal affiliations through membership and participation or community identification).

2. Whenever the Contractor, or any Subcontractor at any tier, subcontracts a portion of the work involving any construction trade, it shall physically include in each subcontract in excess of $10,000 the provisions of these specifications and the Notice which contains the applicable goals for minority and female participation and which is set forth in the solicitations from which this contract resulted.

3. If the Contractor is participating (pursuant to 41 CFR 60-4.5) in a Hometown Plan approved by the U.S. Department of Labor in the covered area either individually or through an association, its affirmative action obligations on all work in the Plan area (including goals and timetables) shall be in accordance with that Plan for those trades which have unions participating in the Plan. Contractors must be able to demonstrate their participation in and compliance with the provisions of any such Hometown Plan. Each Contractor or Subcontractor participating in an approved Plan is individually required to comply with its obligations under the EEO clause, and to make a good faith effort to achieve each goal under the Plan, in each trade in which it has employees. The overall good faith performance by other Contractors or Subcontractors toward a goal in an approved Plan does not excuse any covered Contractor's or Subcontractor's failure to take good faith efforts to achieve the Plan goals and timetables.

4. The Contractor shall implement the specific affirmative action standards provided in paragraphs 7a through p of these specifications. The goals set forth in the solicitation from which this contract resulted are expressed as percentages of the total hours of employment and training of minority and female utilization the Contractor should reasonably be able to achieve in each construction trade in which it has employees in the covered area. The Contractor is expected to make substantially uniform progress toward its goals in each craft during the period specified.

5. Neither the provisions of any collective bargaining agreement, nor the failure by a union with whom the Contractor has a collective bargaining agreement, to refer either minorities or women shall excuse the Contractor's obligations under these specifications, Executive Order 11246, or the regulations promulgated pursuant thereto.

6. In order for the nonworking training hours of apprentices and trainees to be counted in meeting the goals, such apprentices and trainees must be employed by the Contractor during the training period, and the Contractor must have made a commitment to employ the apprentices and trainees at the completion of their training, subject to the availability of employment opportunities. Trainees must be trained pursuant to training programs approved by the U.S. Department of Labor.

7. The Contractor shall take specific affirmative actions to ensure equal employment opportunity. The evaluation of the Contractor's compliance with these specifications shall be based upon its effort to achieve maximum results from its actions. The Contractor shall document these efforts fully, and shall implement affirmative action steps at least as extensive as the following:

a. Ensure and maintain a working environment free of harassment, intimidation, and coercion at all sites, and in all facilities at which the Contractor's employees are assigned to work. The Contractor, where possible, will assign two or more women to each construction project. The Contractor shall specifically ensure that all foremen, superintendents, and other on-site supervisory personnel are aware of and carry out the Contractor's obligation to maintain such a working environment, with specific attention to minority or female individuals working at such sites or in such facilities.

b. Establish and maintain a current list of minority and female recruitment sources, provide written notification to minority and female recruitment sources and to community organizations when the Contractor or its unions have employment opportunities available, and maintain a record of the organizations' responses.

c. Maintain a current file of the names, addresses and telephone numbers of each minority and female off-the-street applicant and minority or female referral from a union, a recruitment source or community organization and of what action was taken with respect to each such individual. If such individual was sent to the union hiring hall for referral and was not referred back to the Contractor by the union or, if referred, not employed by the Contractor, this shall be documented in the file with the reason therefor, along with whatever additional actions the Contractor may have taken.

d. Provide immediate written notification to the Director when the union or unions with which the Contractor has a collective bargaining agreement has not referred to the Contractor a minority person or woman sent by the Contractor, or when the Contractor has other information that the union referral process has impeded the Contractor's efforts to meet its obligations.

e. Develop on-the-job training opportunities and/or participate in training programs for the area which expressly include minorities and women, including upgrading programs and apprenticeship and trainee programs relevant to the Contractor's employment needs, especially those programs funded or approved by the Department of Labor. The Contractor shall provide notice of these programs to the sources compiled under 7b above.

f. Disseminate the Contractor's EEO policy by providing notice of the policy to unions and training programs and requesting their cooperation in assisting the Contractor in meeting its EEO obligations; by including it in any policy manual and collective bargaining agreement; by publicizing it in the company newspaper, annual report, etc.; by specific review of the policy with all management personnel and with all minority and female employees at least once a year; and by posting the company EEO policy on bulletin boards accessible to all employees at each location where construction work is performed.

g. Review, at least annually, the company's EEO policy and affirmative action obligations under these specifications with all employees having any responsibility for hiring, assignment, layoff, termination or other employment decisions including specific review of these items with onsite supervisory personnel such as Superintendents, General Foremen, etc., prior to the initiation of construction work at any job site. A written record shall be made and maintained identifying the time and place of these meetings, persons attending, subject matter discussed, and disposition of the subject matter.

h. Disseminate the Contractor's EEO policy externally by including it in any advertising in the news media, specifically including minority and female news media, and providing written notification to and discussing the Contractor's EEO policy with other Contractors and Subcontractors with whom the Contractor does or anticipates doing business.

i. Direct its recruitment efforts, both oral and written, to minority, female and community organizations, to schools with minority and female students and to minority and female recruitment and training organizations serving the Contractor's recruitment area and employment needs. Not later than one month prior to the date for the acceptance of applications for apprenticeship or other training by any recruitment source, the Contractor shall send written notification to organizations such as the above, describing the openings, screening procedures, and tests to be used in the selection process.

j. Encourage present minority and female employees to recruit other minority persons and women and, where reasonable, provide after school, summer and vacation employment to minority and female youth both on the site and in other areas of a Contractor's workforce.

k. Validate all tests and other selection requirements where there is an obligation to do so under 41 CFR Part 60-3.

l. Conduct, at least annually, an inventory and evaluation at least of all minority and female personnel for promotional opportunities and encourage these employees to seek or to prepare for, through appropriate training, etc., such opportunities.

m. Ensure that seniority practices, job classifications, work assignments and other personnel practices, do not have a discriminatory effect by continually monitoring all personnel and employment related activities to ensure that the EEO policy and the Contractor's obligations under these specifications are being carried out.

n. Ensure that all facilities and company activities are nonsegregated except that separate or single-user toilet and necessary changing facilities shall be provided to assure privacy between the sexes.

o. Document and maintain a record of all solicitations of offers for subcontracts from minority and female construction contractors and suppliers, including circulation of solicitations to minority and female contractor associations and other business associations.

p. Conduct a review, at least annually, of all supervisors' adherence to and performance under the Contractor's EEO policies and affirmative action obligations.

8. Contractors are encouraged to participate in voluntary associations which assist in fulfilling one or more of their affirmative action obligations (7a through p). The efforts of a contractor association, joint contractor-union, contractor-community, or other similar group of which the contractor is a member and participant, may be asserted as fulfilling any one or more of its obligations under 7a through p of these Specifications provided that the contractor actively participates in the group, makes every effort to assure that the group has a positive impact on the employment of minorities and women in the industry, ensures that the concrete benefits of the program are reflected in the Contractor's minority and female workforce participation, makes a good faith effort to meet its individual goals and timetables, and can provide access to documentation which demonstrates the effectiveness of actions taken on behalf of the Contractor. The obligation to comply, however, is the Contractor's and failure of such a group to fulfill an obligation shall not be a defense for the Contractor's noncompliance.

9. A single goal for minorities and a separate single goal for women have been established. The Contractor, however, is required to provide equal employment opportunity and to take affirmative action for all minority groups, both male and female, and all women, both minority and non-minority groups, both male and female, and all women, both minority and non-minority. Consequently, the Contractor may be in violation of the Executive Order if a particular group is employed in a substantially disparate manner (for example, even though the Contractor has achieved its goals for women generally, the Contractor may be in violation of the Executive Order if a specific minority group of women is underutilized).

10. The Contractor shall not use the goals and timetables or affirmative action standards to discriminate against any person because of race, color, religion, sex, or national origin.

11. The Contractor shall not enter into any Subcontract with any person or firm debarred from Government contracts pursuant to Executive Order 11246.

12. The Contractor shall carry out such sanctions and penalties for violation of these specifications and of the Equal Opportunity Clause, including suspension, termination and cancellation of existing subcontracts as may be imposed or ordered pursuant to Executive Order 11246, as amended, and its implementing regulations, by the Office of Federal Contract Compliance Programs. Any Contractor who fails to carry out such sanctions and penalties shall be in violation of these specifications and Executive Order 11246, as amended.

13. The Contractor, in fulfilling its obligations under these specifications, shall implement specific affirmative action steps, at least as extensive as those standards prescribed in paragraph 7 of these specifications, so as to achieve maximum results from its efforts to ensure equal employment opportunity. If the Contractor fails to comply with the requirements of the Executive Order, the implementing regulations, or these specifications, the Director shall proceed in accordance with 41 CFR 60-4.8.

14. The Contractor shall designate a responsible official to monitor all employment related activity to ensure that the company EEO policy is

being carried out, to submit reports relating to the provisions hereof as may be required by the Government and to keep records. Records shall at least include for each employee the name, address, telephone numbers, construction trade, union affiliation if any, employee identification number when assigned, social security number, race, sex, status (e.g., mechanic, apprentice, trainee, helper, or laborer), dates of changes in status, hours worked per week in the indicated trade, rate of pay, and locations at which the work was performed. Records shall be maintained in an easily understandable and retrievable form; however, to the degree that existing records satisfy this requirement, contractors shall not be required to maintain separate records.

15. Nothing herein provided shall be construed as a limitation upon the application of other laws which establish different standards of compliance or upon the application of requirementsa for the hiring of local or other area residents (e.g., those under the Public Works Employment Act of 1977 and the Community Development Block Grant Program).

STANDARD FORM 20
JANUARY 1961 EDITION
GENERAL SERVICES ADMINISTRATION
FED. PROC. REG. (41 CFR) 1-16.401

REFERENCE

DACW09-78-B-0011

INVITATION FOR BIDS
(CONSTRUCTION CONTRACT)

DATE

10 April 1978

NAME AND LOCATION OF PROJECT

INDIAN SCHOOL PARK AND
GREENBELT TRAIL SYSTEM,
INDIAN BEND WASH,
MARICOPA COUNTY,
ARIZONA

DEPARTMENT OR AGENCY

DEPARTMENT OF THE ARMY

BY (*Issuing office*)

U. S. ARMY ENGINEER DISTRICT, LOS ANGELES

Sealed bids in duplicate for the work described herein will be received until 1 p.m. local time at the place of bid opening, 10 May 1978

at Room 1030 (South Tower), 2721 North Central Avenue, Phoenix, Arizona 85004

and at that time publicly opened.

Information regarding bidding material, bid guarantee, and bonds

BID BONDS. Each bidder shall submit with his bid a Bid Bond (Standard Form 24) with good and sufficient surety or sureties acceptable to the Government, or other security as provided in paragraph 4 of Instructions to Bidders (Standard Form 22) in the form of 20% of the bid price or $3,000,000, whichever is lesser. The bid bond penalty may be expressed in terms of a percentage of the bid price or may be expressed in dollars and cents.

PERFORMANCE AND PAYMENT BONDS. Within 5 days after the prescribed forms are presented to the bidder to whom award is made for signature, a written contract on the form prescribed by the specifications shall be executed and two bonds, each with good and sufficient surety or sureties acceptable to the Government, furnished; namely a performance bond (Standard Form 25) and a payment bond (Standard Form 25-A). The penal sums of such bonds will be as follows:

(a) Performance Bond. The penal sum of the performance bond shall equal 100% of the contract price.

(b) Payment Bond.

(1) When the contract price is $1,000,000 or less, the penal sum will be 50% of the contract price

(2) When the contract price is in excess of $1,000,000, but not more than $5,000,000 the penal sum shall be 40% of the contract price.

(3) When the contract price is more than $5,000,000, the penal sum shall be $2,500,000.

Any bonds furnished will be furnished by the Contractor to the Government prior to commencement of contract performance.

Description of work

The work consists of buildings, road relocation, storm drains, utilities, playing surfaces, parking areas, pedestrian underpass, various types of concrete surfacing and finishes, masonry walls, turf, planting, irrigation pump and distribution system and appurtenant work required for construction of Indian School Park and Greenbelt Trail System, complete.

☆ U.S. GOVERNMENT PRINTING OFFICE: 1959—O-572726

READ THE FOLLOWING IN CONJUNCTION WITH INSTRUCTIONS TO BIDDERS (U. S. STANDARD FORM 22).

1. PLANT AND EQUIPMENT. Each bidder shall, upon request of the Contracting Officer, furnish a list of the plant available to the bidder and proposed for use on the work. 10/11/65

2. MODIFICATIONS PRIOR TO DATE SET FOR OPENING BIDS. The right is reserved, as the interest of the Government may require, to revise or amend the specifications or drawings, or both prior to the date set for opening bids. Such revisions and amendments, if any, will be announced by an amendment or amendments to this Invitation for Bids. If the revisions and amendments are of a nature which requires material changes in quantities or prices bid or both, the date set for opening bids may be postponed by such number of days as in the opinion of the District Engineer will enable bidders to revise their bids. In such cases, the amendment will include an announcement of the new date for opening bids. 3/22/65

3. BIDDERS are required to acknowledge receipt of all amendments to this Invitation on the Bid Form (Standard Form 21) in the space provided, or by separate letter or telegram prior to opening of Bids. Failure to acknowledge all amendments may cause the rejection of the bid. 1/13/65

4. NOTICE REGARDING BUY AMERICAN ACT (1970 SEP). The Buy American Act (41 U.S.C. 10a-10d) generally requires that only domestic construction material be used in the performance of this contract. Exception from the Buy American Act shall be permitted only in the case of nonavailability of domestic construction materials. A bid or proposal offering nondomestic construction material will not be accepted unless specifically approved by the Government. When a bidder or offeror proposes to furnish nondomestic construction material, his bid or proposal must set forth an itemization of the quantity, unit price, and intended use of each item of such nondomestic construction material. When offering nondomestic construction material pursuant to this paragraph, bids or proposals may also offer, at stated prices, any available comparable domestic construction material, so as to avoid the possibility that failure of a nondomestic construction material to be acceptable under this paragraph will cause rejection of the entire bid. 12/1/70

5. AVAILABILITY OF SPECIFICATIONS, STANDARDS AND DESCRIPTIONS (1977 JUN) Specifications, standards and descriptions cited in this solicitation are available as indicated below:

5.1 Unclassified Federal, Military and Other Specifications and Standards (Excluding Commercial), and Data Item Descriptions. Submit request on DD Form 1425 (Specifications and Standards Requisition) to:

Commanding Officer
U.S. Naval Publications and Forms Center
5801 Tabor Avenue – Philadelphia, Pa. 19120

The Acquisition Management Systems and Data Requirements Control List, DoD Directive 5000.19-L, Volume II, may be ordered on the DD Form 1425. The Department of Defense Index of Specifications and Standards (DODISS) may be purchased from the Superintendent of Documents, U.S. Government Printing Office, Washington, D. C., 20402. When requesting a specification or standard, the request shall indicate the title, number, date and any applicable amendment thereto by number and date. When requesting a data item description, the request shall cite the applicable data item number set forth in the solicitation. When DD Form 1425 is not available, the request may be submitted in letter form, giving the same information as listed above, and the solicitation or contract number involved. Such requests may also be made to the activity by Telex No. 834295, Western Union No. 710-670-1685, or telephone (area code 215-697-3321) in case of urgency. 8/25/77

5.2 Commercial Specifications, Standards and Descriptions. These specifications, standards and descriptions are not available from Government sources. They may be obtained from the publishers.

6. AVAILABILITY FOR EXAMINATION OF SPECIFICATIONS, STANDARDS, DRAWINGS, AND OTHER PERTINENT DOCUMENTS. The specifications, standards, drawings, and other pertinent documents cited in this solicitation may be examined at the following location:

U.S. Army Engineer District, Los Angeles
300 No. Los Angeles Street
Los Angeles, California 90053

7. In addition to the immediate site of construction, the Department of Labor has stated that the Davis-Bacon Act applies to Contractor's operations connected with temporary facilities located off the immediate site of construction such as batch plants, sand pits, rock quarries and similar operations which have been set up exclusively to furnish materials for the contract. Therefore, employees related to these temporary facilities are considered on-site employees, and the Contractor shall maintain complete records as set out in the Labor Standards Provisions of the contract. 4/15/71

8. The Government further reserves the right to make award of any or all schedules of any bid, unless the bidder qualifies such bid by specific limitation; also to make award to the bidder whose aggregate bid on any combination of bid schedules is low. For the purpose of this Invitation for Bids, the word "item" as used in paragraph 10(c) of Standard Form 22, shall be considered to mean "schedule."

Read the following in conjunction with instructions to bidders (U.S. Standard Form 22.)

9. DRAWINGS. Sets of drawings, half-size, and of specifications will be furnished upon receipt of payment of $10.00 per set. If individual plan sheets are requested, they will be furnished at the rate of $0.10 for half-size, $0.50 for full-size, for each sheet requested, but with a minimum charge of $1.00. The maximum charge shall not exceed the charge for a full set of plans. No refund of the payment for drawings will be made and the drawings need not be returned to the District Engineer. Additional copies of the specifications alone will be furnished an applicant at the rate of $1.00 per copy. Payments will be made by cash, check or money order and delivered to the U. S. Army Engineer District, Los Angeles, 300 North Los Angeles Street, Los Angeles, California. Checks and money orders should be made payable to "Treasurer of the United States."

10. HAND CARRIED BIDS. Hand carried bids shall be deposited in Room 6202, 300 North Los Angeles Street, Los Angeles, California, prior to the time and date set for opening of bids or bids may be delivered to Room 6048 immediately prior to bid opening time.

11. TELEGRAPHIC MODIFICATIONS TO BIDS should be addressed to:

U. S. Army Engineer District, Los Angeles
Resident Office
2721 North Central Avenue
Phoenix, Arizona 85004

12. NOTE THE AFFIRMATIVE ACTION REQUIREMENT OF THE EQUAL OPPORTUNITY CLAUSE WHICH MAY APPLY TO THE CONTRACT RESULTING FROM THIS SOLICITATION.

13. NOTE THE CERTIFICATION OF NONSEGREGATED FACILITIES IN THIS SOLICITATION. Bidders, offerors and applicants are cautioned to note the "Certification of Non-Segregated Facilities" in the solicitation. Failure of a bidder or offeror to agree to the certification will render his bid or offer nonresponsive to the terms of solicitations involving awards of contracts exceeding $10,000 which are not exempt from the provisions of the Equal Opportunity clause. (1975 OCT)

14. ADDITIONAL INFORMATION pertaining to these plans and specifications may be obtained by writing or calling (collect calls not accepted) U. S. Army Engineer District, Los Angeles, Attn: Mr. S. M. Ackerman, P. O. Box 2711, Los Angeles, California 90053. Telephone 213 688-5493.

15. NOTICE OF TOTAL SMALL BUSINESS SET-ASIDE. (1972 JUL)

15.1 Restriction. Offers under this procurement are solicited from small business concerns only and this procurement is to be awarded only to one or more small business concerns. This action is based on a determination by the Contracting Officer, alone or in conjunction with a representative of the Small Business Administration that it is in the interest of maintaining or mobilizing the Nation's full productive capacity, in the interest of war or national defense programs, or in the interest of assuring that a fair proportion of Government procurement is placed with small business concerns. Offers received from firms which are not small business concerns shall be considered nonresponsive and shall be rejected.

15.2 Definition. A "Small Business Concern" is a concern, including its affiliates, which is independently owned and operated, is not dominant in the field of operation in which it is offering on Government contracts, and can further qualify under the criteria set forth in regulations of the Small Business Administration (Code of Federal Regulations, Title 13, Section 121.3-8). For the purpose of this Invitation for Bids, in order to qualify as a "Small Business Concern" the average annual receipts of the concern and its affiliates for its preceding three fiscal years must not exceed $12,000,000, except that if the concern has 50 percent or more of its annual sales or receipts attributable to business activity within Alaska, such average annual receipts must not exceed $15,000,000.

16. ARITHMETIC DISCREPANCIES.

(a) For the purpose of initial evaluation of bids, the following will be utilized in resolving arithmetic discrepancies found on the face of the bidding schedule as submitted by bidders:

(1) Obviously misplaced decimal points will be corrected:

(2) In case of discrepancy between unit price and extended price, the unit price will govern;

(3) Apparent errors in extension of unit prices will be corrected; and

(4) Apparent errors in addition of lump-sum and extended prices will be corrected.

(b) For the purposes of bid evaluation, the Government will proceed on the assumption that the bidder intends his bid to be evaluated on the basis of the unit prices, extensions, and totals arrived at by resolution of arithmetic discrepancies as provided above and the bid will be so reflected on the abstract of bids.

17. MINIMUM ACCEPTANCE PERIOD (1975 MAR). Bids allowing less than the number of calendar days specified in the "Bid" portion of SF 19 (or on the reverse of SF 21 as applicable) for acceptance by the Government will be rejected as nonresponsive.

18. ADDITIVE ITEMS (APR. 1968). The low bidder for purposes of award shall be the conforming responsible bidder offering the low aggregate amount for the first or base bid item, plus (in the order of priority listed in the schedule) those additive bid items providing the most features of the work within the funds determined by the Government to be available before bids are opened. If addition of another bid item in the listed order of priority would make the award exceed such funds for all bidders, it shall be skipped and the next subsequent additive bid item in a lower amount shall be added if award thereon can be made within such funds. For example, when the amount available is $100,000; and a bidder's base bid and four successive additives are $85,000, $10,000, $8,000, $6,000 and $4,000, the aggregate amount of the bid for purposes of award would be $99,000 for the base bid plus the first and fourth additives, the second and third additives being skipped because each of them would cause the aggregate bid to exceed $100,000. In any case all bids shall be evaluated on the basis of the same additive bid items, determined as above provided. The listed order of priority need be followed only for determining the low bidder. After determination of the low bidder as stated, award in the best interests of the Government may be made to him on his base bid and any combination of his additive bid for which funds are determined to be available at the time of the award, provided that award on such combination of bid items does not exceed the amount offered by any other conforming responsible bidder for the same combination of bid items.

* * * * *

NOTICE OF REQUIREMENT FOR AFFIRMATIVE ACTION TO ENSURE EQUAL EMPLOYMENT OPPORTUNITY

The Bidder's attention is called to the "EQUAL OPPORTUNITY" and "LOCAL AFFIRMATIVE ACTION PLAN" clauses of the contract.

The acceptable ranges of minority manpower utilization, expressed in percentage terms, are as follows:

BIDDER'S MINORITY MANPOWER UTILIZATION GOALS
(Percentage of Total Manhours)

TRADE		
All Construction Trades to be used in the performance of the contract	Until 11/30/71	5.0% - 10.0%
	From 12/1/71 Until 11/30/72	10.0% - 15.0%
	From 12/1/72 Until 11/30/73	15.0% - 20.0%
	From 12/1/73 Until 11/30/74	20.0% - 25.0%
	From 12/1/74 Until 11/30/76	25.0% - 30.0%

In the event that under a contract which is subject to these Bid Conditions any work is performed in a year later than the latest year for which acceptable ranges of minority manpower utilization have been determined herein, the ranges for 1974-1976 shall be applicable to such work.

The Bidder shall, within 5 days after a request therefor by the Contracting Officer or his duly authorized representative, submit the following information:

(a) A list of the construction trades he intends to use, either directly or through subcontractors at any tier, in the performance of the work covered by this solicitation; and

(b) A list of all current construction work or contracts to which he is a party in any capacity in the covered area.

As used in this NOTICE and the contract to result from this solicitation:

(a) "the covered area" means the area of jurisdiction of the Tucson and Phoenix Building and Construction Trades Council.

(b) "Director, OFCC" means the Director, Office of Federal Contract Compliance, United States Department of Labor, or any person to whom he delegates authority; and

(c) "minority" means Negro, Spanish-surnamed American, Oriental, and American Indian, and includes both men and women.

STANDARD FORM 22
OCTOBER 1969 EDITION
GENERAL SERVICES ADMINISTRATION
FED. PROC. REG. (41 CFR) 1-16.401

INSTRUCTIONS TO BIDDERS

(CONSTRUCTION CONTRACT)

1. Explanations to Bidders. Any explanation desired by a bidder regarding the meaning or interpretation of the invitation for bids, drawings, specifications, etc., must be requested in writing and with sufficient time allowed for a reply to reach bidders before the submission of their bids. Any interpretation made will be in the form of an amendment of the invitation for bids, drawings, specifications, etc., and will be furnished to all prospective bidders. Its receipt by the bidder must be acknowledged in the space provided on the Bid Form (Standard Form 21) or by letter or telegram received before the time set for opening of bids. Oral explanations or instructions given before the award of the contract will not be binding.

2. Conditions Affecting the Work. Bidders should visit the site and take such other steps as may be reasonably necessary to ascertain the nature and location of the work, and the general and local conditions which can affect the work or the cost thereof. Failure to do so will not relieve bidders from responsibility for estimating properly the difficulty or cost of successfully performing the work. The Government will assume no responsibility for any understanding or representations concerning conditions made by any of its officers or agents prior to the execution of the contract, unless included in the invitation for bids, the specifications, or related documents.

3. Bidder's Qualifications. Before a bid is considered for award, the bidder may be requested by the Government to submit a statement regarding his previous experience in performing comparable work, his business and technical organization, financial resources, and plant available to be used in performing the work.

4. Bid Guarantee. Where a bid guarantee is required by the invitation for bids, failure to furnish a bid guarantee in the proper form and amount, by the time set for opening of bids, may be cause for rejection of the bid.

A bid guarantee shall be in the form of a firm commitment, such as a bid bond, postal money order, certified check, cashier's check, irrevocable letter of credit or, in accordance with Treasury Department regulations, certain bonds or notes of the United States. Bid guarantees, other than bid bonds, will be returned (*a*) to unsuccessful bidders as soon as practicable after the opening of bids, and (*b*) to the successful bidder upon execution of such further contractual documents and bonds as may be required by the bid as accepted.

If the successful bidder, upon acceptance of his bid by the Government within the period specified therein for acceptance (sixty days if no period is specified) fails to execute such further contractual documents, if any, and give such bond(s) as may be required by the terms of the bid as accepted within the time specified (ten days if no period is specified) after receipt of the forms by him, his contract may be terminated for default. In such event he shall be liable for any cost of procuring the work which exceeds the amount of his bid, and the bid guarantee shall be available toward offsetting such difference.

5. Preparation of Bids. (*a*) Bids shall be submitted on the forms furnished, or copies thereof, and must be manually signed. If erasures or other changes appear on the forms, each erasure or change must be initialed by the person signing the bid. Unless specifically authorized in the invitation for bids, telegraphic bids will not be considered.

(*b*) The bid form may provide for submission of a price or prices for one or more items, which may be lump sum bids, alternate prices, scheduled items resulting in a bid on a unit of construction or a combination thereof, etc. Where the bid form explicitly requires that the bidder bid on all items, failure to do so will disqualify the bid. When submission of a price on all items is not required, bidders should insert the words "no bid" in the space provided for any item on which no price is submitted.

(*c*) Unless called for, alternate bids will not be considered.

(*d*) Modifications of bids already submitted will be considered if received at the office designated in the invitation for bids by the time set for opening of bids. Telegraphic modifications will be considered, but should not reveal the amount of the original or revised bid.

6. Submission of Bids. Bids must be sealed, marked, and addressed as directed in the invitation for bids. Failure to do so may result in a premature opening of, or a failure to open, such bid.

7. LATE BIDS, MODIFICATIONS OF BIDS OR WITHDRAWAL OF BIDS (1977 APR)

(a) Any bid received at the office designated in the solicitation after the exact time specified for receipt will not be considered unless it is received before award is made and either:

(i) it was sent by registered or certified mail not later than the fifth calendar day prior to the date specified for receipt of bids (e.g., a bid submitted in response to a solicitation requiring receipt of bids by the 20th of the month must have been mailed by the 15th or earlier); or,

(ii) it was sent by mail (or telegram if authorized) and it is determined by the Government that the late receipt was due solely to mishandling by the Government after receipt at the Government installation.

(b) Any modification or withdrawal of bid is subject to the same conditions as in (a) above. A bid may also be withdrawn in person by a bidder or his authorized representative, *provided* his identity is made known and he signs a receipt for the bid, but only if the withdrawal is made prior to the exact time set for receipt of bids.

(c) The only acceptable evidence to establish:

(i) the date of mailing of a late bid, modification or withdrawal sent either by registered or certified mail is the U.S. Postal Service postmark on the wrapper or on the original receipt from the U.S. Postal Service. If neither postmark shows a legible date, the bid, modification or withdrawal shall be deemed to have been mailed late. (The term "postmark" means a printed, stamped, or otherwise placed impression that is readily identifiable without further action as having been supplied and affixed on the date of mailing by employees of the U.S. Postal Service.)

(ii) the time of receipt at the Government installation is the time/date stamp of such installation on the bid wrapper or other documentary evidence of receipt maintained by the installation.

(d) Notwithstanding the above, a late modification of an otherwise successful bid which makes its terms more favorable to the Government will be considered at any time it is received and may be accepted.

NOTE: The term "telegram" includes mailgrams.

8. Deleted

9. Public Opening of Bids. Bids will be publicly opened at the time set for opening in the invitation for bids. Their content will be made public for the information of bidders and others interested, who may be present either in person or by representative.

10. Award of Contract. (*a*) Award of contract will be made to that responsible bidder whose bid, conforming to the invitation for bids, is most advantageous to the Government, price and other factors considered.

(*b*) The Government may, when in its interest, reject any or all bids or waive any informality in bids received.

(*c*) The Government may accept any item or combination of items of a bid, unless precluded by the invitation for bids or the bidder includes in his bid a restrictive limitation.

11. Contract and Bonds. The bidder whose bid is accepted will, within the time established in the bid, enter into a written contract with the Government and, if required, furnish performance and payment bonds on Government standard forms in the amounts indicated in the invitation for bids or the specifications.

☆ U. S. GOVERNMENT PRINTING OFFICE: 1971—423—808

12. Minority Business Subcontracting. Bidders are cautioned that compliance with the General Provision entitled Minority Business Enterprises Subcontracting Program requires the solicitation of minority business enterprise subcontractors and suppliers at the time of bid preparation where time or other circumstances would not permit such solicitation after award. Bidders desiring assistance in developing a source list of minority business enterprises are encouraged to contact minority contractor associations and appropriate Offices of Minority Business Enterprise, addresses of which may be obtained from U.S. Army Engineer District, Los Angeles, Office of Counsel, Labor Relations Advisor, 300 North Los Angeles Street, Los Angeles, California, 90053, telephone (213) 688-5390.

STANDARD FORM 21
DECEMBER 1965 EDITION
GENERAL SERVICES ADMINISTRATION
FED. PROC. REG. (41 CFR) 1-16.401

BID FORM
(CONSTRUCTION CONTRACT)

REFERENCE
DACW09-78-B-0011

Read the Instructions to Bidders (Standard Form 22)
This form to be submitted in duplicate

DATE OF INVITATION
10 April 1978

NAME AND LOCATION OF PROJECT
INDIAN SCHOOL PARK AND
GREENBELT TRAIL SYSTEM,
INDIAN BEND WASH,
MARICOPA COUNTY,
ARIZONA

NAME OF BIDDER *(Type or print)*

(Date)

TO: U. S. ARMY ENGINEER DISTRICT, LOS ANGELES
P. O. Box 2711
Los Angeles, California 90053

In compliance with the above-dated invitation for bids, the undersigned hereby proposes to perform all work for the construction of Indian School Park and Greenbelt Trail System,

in strict accordance with the General Provisions, specifications, schedules, drawings, and conditions, for the amounts set forth in the attached Bidding Schedule.

21-108

(Continue on other side)

EQUAL EMPLOYMENT COMPLIANCE (1974 APR) By submission of this offer, the offeror represents that, to the best of his knowledge and belief except as noted below, up to the date of this offer no written notice such as a show cause letter, a letter indicating probable cause, or any other formal written notification citing specific deficiencies, has been received by the offeror from any Federal Government agency or representative thereof that the offeror or any of its divisions or affiliates or know first-tier subcontractors is in violation of any of the provisions of Executive Order No. 11246 of September 24, 1965, Executive Order No. 11375 of October 13, 1967, or rules and regulations of the Secretary of Labor (41 CFR, Chapter 60) and specifically as to not having an acceptable affirmative action program or being in noncompliance with any other aspect of the Equal Employment Opportunity Program. It is further agreed that should there be any change in the status or circumstances between this date and the date of expiration of this offer or any extension thereof, the Contracting Officer will be notified promptly. (ASPR 7-2003.14(b)(3).

The undersigned agrees that, upon written acceptance of this bid, mailed or otherwise furnished within 30 calendar days [redacted] **after the date of opening of bids, he will within** 5 **calendar days (unless a longer period is allowed) after receipt of the prescribed forms, execute Standard Form 23, Construction Contract, and give performance and payment bonds on Government standard forms with good and sufficient surety.** (See paragraph No. 18 of the Invitation for Bids).

The undersigned agrees, if awarded the contract, to commence and to complete the work in accordance with the stipulations of Paragraph 1. of the SPECIAL PROVISIONS.

RECEIPT OF AMENDMENTS: *The undersigned acknowledges receipt of the following amendments of the invitation for bids, drawings, and/or specifications, etc. (Give number and date of each):*

The representations and certifications on the accompanying STANDARD FORM 19-B are made a part of this bid.

ENCLOSED IS BID GUARANTEE, CONSISTING OF	IN THE AMOUNT OF
NAME OF BIDDER (*Type or print*)	FULL NAME OF ALL PARTNERS (*Type or print*)
BUSINESS ADDRESS (*Type or print*) (*Include "ZIP Code"*)	
BY (*Signature in ink. Type or print name under signature*)	
TITLE (*Type or print*)	

DIRECTIONS FOR SUBMITTING BIDS: *Envelopes containing bids, guarantee, etc., must be sealed, marked, and addressed as follows:*

Envelopes shall be marked in the upper left hand corner
Bid Under Reference No.
DACW09-78-B-0011

Envelopes shall be addressed:
U.S. ARMY ENGINEER DISTRICT
LOS ANGELES
ARIZONA RESIDENT OFFICE
2721 North Central Avenue
Phoenix, Arizona 85004

CAUTION—Bids should not be qualified by exceptions to the bidding conditions.

☆ U S GOVERNMENT PRINTING OFFICE 1966 O—205-147—(15-F)

BIDDING SCHEDULE

Item No.	Description	Estimated Quantity	Unit	Unit Price	Estimated Amount
1.	DIVERSION AND CONTROL OF WATER	1	Job	L.S.	_____
2.	SITE PREPARATION	1	Job	L.S.	_____
3.	STRIPPING LAKE BORROW AREA	6290	Cu. Yd.	_____	_____
4.	EXCAVATION	280,700	Cu. Yd.	_____	_____
5.	FILL	95,000	Cu. Yd.	_____	_____
6.	DELETED			_____	_____
7.	DELETED			_____	_____
8.	LAKE LINING FILL	11,200	Cu. Yd.	_____	_____
9.	REMOVE EXISTING PAVEMENT	1	Job	L.S.	_____
10.	REMOVE EXISTING CONCRETE CURB RETURN, CURB AND GUTTER	1	Job	L.S.	_____
11.	SUBGRADE PREPARATION, HAYDEN ROAD RELOCATION	15,045	Sq. Yd.	_____	_____
12.	SUBGRADE PREPARATION, PARKING LOTS	17,552	Sq. Yd.	_____	_____
13.	AGGREGATE BASE (ABC), HAYDEN ROAD	3,950	Cu. Yd.	_____	_____
14.	AGGREGATE BASE (ABC), PARKING LOTS	2,925	Cu. Yd.	_____	_____

BIDDING SCHEDULE (Continued)

Item No.	Description	Estimated Quantity	Unit	Unit Price	Estimated Amount
15.	ASPHALT CONCRETE PAVEMENT, HAYDEN ROAD	2,170	Ton	_____	_____
16.	ASPHALT CONCRETE PAVEMENT, PARKING LOTS	1,970	Ton	_____	_____
17.	DRIVEWAY ENTRANCES	1	Job	L.S.	_____
18.	SIDEWALK RAMPS AT HAYDEN ROAD CURB RETURNS	1	Job	L.S.	_____
19.	PEDESTRIAN UNDERPASS	1	Job	L.S.	_____
20.	CONCRETE CURBS, HAYDEN ROAD	1	Job	L.S.	_____
21.	CONCRETE CURBS, PARK AND PARKING AREAS	1	Job	L.S.	_____
22.	DETOURS AND TRAFFIC CONTROL	1	Job	L.S.	_____
23.	PAVEMENT MARKING, HAYDEN ROAD	1	Job	L.S.	_____
24.	PAVEMENT MARKING, PARKING LOTS	1	Job	L.S.	_____
25.	STORM DRAIN MODIFICATION NEAR HAYDEN ROAD, STATION 26+81	1	Job	L.S.	_____
26.	STORM DRAIN AT HAYDEN ROAD, STATIONS 8+14.75 AND 10+62.22	1	Job	L.S.	_____
27.	STORM DRAIN "F"	1	Job	L.S.	_____

BIDDING SCHEDULE (Continued)

Item No.	Description	Estimated Quantity	Unit	Unit Price	Estimated Amount
28.	STORM DRAIN "E", "G", "H", "I", "J" AND "K"	1	Job	L.S.	_____
29.	GROUTED RIPRAP (STONE) PROTECTION	1	Job	L.S.	_____
30.	WASTE WATER STREAM	1	Job	L.S.	_____
31.	CONCRETE PAVING FOR WALKS, PROMENADE, PLAZAS, PICNIC AREAS AND RAMADAS	1	Job	L.S.	_____
32.	MASONRY RETAINING WALLS	1	Job	L.S.	_____
33.	CHEEK WALL	1	Job	L.S.	_____
34.	SEAT WALL	1	Job	L.S.	_____
35.	BOLLARDS AND CHAIN	1	Job	L.S.	_____
36.	FENCING	1	Job	L.S.	_____
37.	POTABLE WATER SYSTEM	1	Job	L.S.	_____
38.	IRRIGATION SYSTEM	1	Job	L.S.	_____
39.	IRRIGATION SYSTEM PUMP STATION	1	Job	L.S.	_____
40.	SANITARY SEWERS	1	Job	L.S.	_____
41.	GRAVEL AND DECOMPOSED GRANITE SURFACING	1	Job	L.S.	_____
42.	TURF	1	Job	L.S.	_____
43.	PLANTING	1	Job	L.S.	_____
44.	TOT LOT SAND FILL AND BOULDERS	1	Job	L.S.	_____

BIDDING SCHEDULE (Continued)

Item No.	Description	Estimated Quantity	Unit	Unit Price	Estimated Amount
45.	LANDSCAPE BOULDERS	1	Job	L.S.	_____
46.	TENNIS COURTS	1	Job	L.S.	_____
47.	CROQUET COURT	1	Job	L.S.	_____
48.	VOLLEYBALL COURTS	1	Job	L.S.	_____
49.	HORSESHOE COURT	1	Job	L.S.	_____
50.	MULTIPURPOSE (BASEBALL) FIELD	1	Job	L.S.	_____
51.	BIKE RACKS	1	Job	L.S.	_____
52.	SIGNS AND GRAPHICS	1	Job	L.S.	_____
53.	PREFABRICATED METAL BUILDING	1	Job	L.S.	_____
54.	RAMADAS	1	Job	L.S.	_____
55.	PARK CONTROL BUILDING	1	Job	L.S.	_____
56.	VISITOR CENTER	1	Job	L.S.	_____
57.	EXTERIOR ELECTRICAL AND LIGHTING	1	Job	L.S.	_____
58.	GREENBELT TRAIL SYSTEM	1	Job	L.S.	_____

TOTAL AMOUNT $_____

BIDDING SCHEDULE (Continued)

Item No.	Description	Estimated Quantity	Unit	Unit Price	Estimated Amount
	ADDITIVE ITEMS				
59.	HANDBALL COURTS AND LIGHTING	1	Job	L.S.	_____
60.	CONCRETE PATH	1	Job	L.S.	_____
61.	BASKETBALL COURTS AND LIGHTING	1	Job	L.S.	_____
62.	TOT LOT EQUIPMENT	1	Job	L.S.	_____
63.	SHUFFLEBOARD COURT AND LIGHTING	1	Job	L.S.	_____
64.	PARK CONTROL BUILDING LOCKERS	1	Job	L.S.	_____
65.	KIOSKS	1	Job	L.S.	_____

NOTE: All extensions of the unit prices shown will be subject to verification by the Government. In case of variation between the unit price and the extension, the unit price will be considered to be the bid.

If a bid or modification to a bid based on unit prices is submitted which provides for a lump sum adjustment to the total estimated cost, the application of the lump sum adjustment to each unit price in the bidding schedule must be stated. If it is not stated, the bidder agrees that the lump sum adjustment shall be applied on a pro rata basis to every unit price in the bidding schedule.

Amounts and prices shall be indicated in either figures or words, not both.

Bids shall be submitted on all items of the Bidding Schedule.

REPRESENTATIONS AND CERTIFICATIONS

(Construction and Architect-Engineer Contract)

(For use with Standard Forms 19, 21 and 252)

REFERENCE *(Enter same No.(s) as on SF 19, 21 and 252)*

NAME AND ADDRESS OF BIDDER *(No., Street, City, State, and ZIP Code)*

DATE OF BID

In negotiated procurements, "bid" and "bidder" shall be construed to mean "offer" and "offeror."

The bidder makes the following representations and certifications as a part of the bid identified above. *(Check appropriate boxes.)*

1. SMALL BUSINESS

He ☐ is, ☐ is not, a small business concern. (A small business concern for the purpose of Government procurement is a concern, including its affiliates, which is independently owned and operated, is not dominant in the field of operations in which it is bidding on Government contracts, and can further qualify under the criteria concerning number of employees, average annual receipts, or other criteria as prescribed by the Small Business Administration. For additional information see governing regulations of the Small Business Administration (13 CFR Part 121)).

2. MINORITY BUSINESS ENTERPRISE

He ☐ is, ☐ is not a minority business enterprise. A minority business enterprise is defined as a "business, at least 50 percent of which is owned by minority group members or, in case of publicly owned businesses, at least 51 percent of the stock of which is owned by minority group members." For the purpose of this definition, minority group members are Negroes, Spanish-speaking American persons, American-Orientals, American-Indians, American-Eskimos, and American-Aleuts."

3. CONTINGENT FEE

(a) He ☐ has, ☐ has not, employed or retained any company or person (other than a full-time bona fide employee working solely for the bidder) to solicit or secure this contract, and *(b)* he ☐ has, ☐ has not, paid or agreed to pay any company or person (other than a full-time bona fide employee working solely for the bidder) any fee, commission, percentage or brokerage fee, contingent upon or resulting from the award of this contract; and agrees to furnish information relating to *(a)* and *(b)* above as requested by the Contracting Officer. *(For interpretation of the representation, including the term "bona fide employee," see Code of Federal Regulations, Title 41, Subpart 1-1.5.)*

4. TYPE OF ORGANIZATION

He operates as an ☐ individual, ☐ partnership, ☐ joint venture, ☐ corporation, incorporated in State of .....

5. INDEPENDENT PRICE DETERMINATION

(a) By submission of this bid, each bidder certifies, and in the case of a joint bid each party thereto certifies as to his own organization, that in connection with this procurement:

(1) The prices in this bid have been arrived at independently, without consultation, communication, or agreement, for the purpose of restricting competition, as to any matter relating to such prices with any other bidder or with any competitor;

(2) Unless otherwise required by law, the prices which have been quoted in this bid have not been knowingly disclosed by the bidder and will not knowingly be disclosed by the bidder prior to opening, in the case of a bid, or prior to award, in the case of a proposal, directly or indirectly to any other bidder or to any competitor; and

(3) No attempt has been made or will be made by the bidder to induce any other person or firm to submit or not to submit a bid for the purpose of restricting competition.

(b) Each person signing this bid certifies that:

(1) He is the person in the bidder's organization responsible within that organization for the decision as to the prices being bid herein and that he has not participated, and will not participate, in any action contrary to *(a)*(1) through *(a)*(3) above; or

(2) (i) He is not the person in the bidder's organization responsible within that organization for the decision as to the prices being bid herein but that he has been authorized in writing to act as agent for the persons responsible for such decision in certifying that such persons have not participated, and will not participate, in any action contrary to *(a)*(1) through *(a)* (3) above, and as their agent does hereby so certify; and (ii) he has not participated, and will not participate, in any action contrary to *(a)*(1) through *(a)*(3) above.

(c) This certification is not applicable to a foreign bidder submitting a bid for a contract which requires performance or delivery outside the United States, its possessions, and Puerto Rico.

(d) A bid will not be considered for award where *(a)*(1), *(a)*(3), or *(b)* above, has been deleted or modified. Where *(a)*(2) above, has been deleted or modified, the bid will not be considered for award unless the bidder furnishes with the bid a signed statement which sets forth in detail the circumstances of the disclosure and the head of the agency, or his designee, determines that such disclosure was not made for the purpose of restricting competition.

NOTE.—Bids must set forth full, accurate, and complete information as required by this invitation for bids (including attachments). The penalty for making false statements in bids is prescribed in 18 U.S.C. 1001.

STANDARD FORM 19-B, JUNE 1976 EDITION
GENERAL SERVICES ADMINISTRATION
FED. PROC. REG. (41 CFR) 1-16.401 AND 1-16.701

THE FOLLOWING NEED BE CHECKED ONLY IF BID EXCEEDS $10,000 IN AMOUNT.

6. EQUAL OPPORTUNITY

He ☐ has, ☐ has not, participated in a previous contract or subcontract subject to the Equal Opportunity Clause herein, the clause originally contained in Section 301 of Executive Order No. 10925, or the clause contained in Section 201 of Executive Order No. 11114; he ☐ has, ☐ has not, filed all required compliance reports; and representations indicating submission of required compliance reports, signed by proposed subcontractors, will be obtained prior to subcontract awards.

(The above representations need not be submitted in connection with contracts or subcontracts which are exempt from the equal opportunity clause.)

7. PARENT COMPANY AND EMPLOYER IDENTIFICATION NUMBER

Each bidder shall furnish the following information by filling in the appropriate blocks:

(a) Is the bidder owned or controlled by a parent company as described below? ☐ Yes ☐ No. *(For the purpose of this bid, a parent company is defined as one which either owns or controls the activities and basic business policies of the bidder. To own another company means the parent company must own at least a majority (more than 50 percent) of the voting rights in that company. To control another company, such ownership is not required; if another company is able to formulate, determine, or veto basic business policy decisions of the bidder, such other company is considered the parent company of the bidder. This control may be exercised through the use of dominant minority voting rights, use of proxy voting, contractual arrangements, or otherwise.)*

(b) If the answer to *(a)* above is "Yes," bidder shall insert in the space below the name and main office address of the parent company.

NAME OF PARENT COMPANY	MAIN OFFICE ADDRESS *(No., Street, City, State, and ZIP Code)*

(c) Bidder shall insert in the applicable space below, if he has no parent company, his own Employer's Identification Number (E.I. No.) *(Federal Social Security Number used on Employer's Quarterly Federal Tax Return, U.S. Treasury Department Form 941)*, or, if he has a parent company, the E.I. No. of his parent company.

EMPLOYER IDENTIFICATION NUMBER OF ➤	PARENT COMPANY	BIDDER

8. CERTIFICATION OF NONSEGREGATED FACILITIES

(Applicable to (1) contracts, (2) subcontracts, and (3) agreements with applicants who are themselves performing federally assisted construction contracts, exceeding $10,000 which are not exempt from the provisions of the Equal Opportunity clause.)

By the submission of this bid, the bidder, offeror, applicant, or subcontractor certifies that he does not maintain or provide for his employees any segregated facilities at any of his establishments, and that he does not permit his employees to perform their services at any location, under his control, where segregated facilities are maintained. He certifies further that he will not maintain or provide for his employees any segregated facilities at any of his establishments, and that he will not permit his employees to perform their services at any location, under his control, where segregated facilities are maintained. The bidder, offeror, applicant, or subcontractor agrees that a breach of this certification is a violation of the Equal Opportunity clause in this contract. As used in this certification, the term "segregated facilities" means any waiting rooms, work areas, rest rooms and wash rooms, restaurants and other eating areas, time clocks, locker rooms and other storage or dressing areas, parking lots, drinking fountains, recreation or entertainment areas, transportation, and housing facilities provided for employees which are segregated by explicit directive or are in fact segregated on the basis of race, color, religion, or national origin, because of habit, local custom, or otherwise. He further agrees that (except where he has obtained identical certifications from proposed subcontractors for specific time periods) he will obtain identical certificatons from proposed subcontractors prior to the award of subcontractors exceeding $10,000 which are not exempt from the provisions of the Equal Opportunity clause; that he will retain such certifications in his files; and that he will forward the following notice to such proposed subcontractors (except where the proposed subcontractors have submitted identical certifications for specific time periods):

NOTICE TO PROSPECTIVE SUBCONTRACTORS OF REQUIREMENT FOR CERTIFICATIONS OF NONSEGREGATED FACILITIES

A Certification of Nonsegregated Facilities must be submitted prior to the award of a subcontract exceeding $10,000 which is not exempt from the provisions of the Equal Opportunity clause. The certification may be submitted either for each subcontract or for all subcontracts during a period (i.e., quarterly, semiannually, or annually).

NOTE: The penalty for making false statements in offers is prescribed in 18 U.S.C. 1001.

9. CLEAN AIR AND WATER

(Applicable if the bid or offer exceeds $100,000, or the contracting officer has determined that orders under an indefinite quantity contract in any year will exceed $100,000, or a facility to be used has been the subject of a conviction under the Clean Air Act (42 U.S.C. 1857c-8(c)(1)) or the Federal Water Pollution Control Act (33 U.S.C. 1319(c)) and is listed by EPA, or is not otherwise exempt.)

The bidder or offeror certifies as follows:

(a) Any facility to be utilized in the performance of this proposed contract has ☐, has not ☐, been listed on the Environmental Protection Agency List of Violating Facilities.

(b) He will promptly notify the contracting officer, prior to award, of the receipt of any communication from the Director, Office of Federal Activities, Environmental Protection Agency, indicating that any facility which he proposes to use for the performance of the contract is under consideration to be listed on the EPA List of Violating Facilities.

(c) He will include substantially this certification, including this paragraph (c), in every nonexempt subcontract.

☆U. S. GPO:1977-0-241-530/3364

STANDARD FORM 23
JANUARY 1961 EDITION
GENERAL SERVICES ADMINISTRATION
FED PROC REG (41 CFR) 1-16.401

Rev. LAD Nov. 70

CONSTRUCTION CONTRACT

(See instructions on reverse)

CONTRACT NO

DATE OF CONTRACT

NAME AND ADDRESS OF CONTRACTOR

CHECK APPROPRIATE BOX

- [ ] Individual
- [ ] Partnership
- [ ] Joint Venture
- [ ] Corporation, incorporated in the State of _____

DEPARTMENT OR AGENCY

CONTRACT FOR *(Work to be performed)*

PLACE

CONTRACT PRICE *(Express in words and figures)*

ADMINISTRATIVE DATA *(Optional)*

The United States of America (hereinafter called the Government), represented by the Contracting Officer executing this contract, and the individual, partnership, joint venture, or corporation named above (hereinafter called the Contractor), mutually agree to perform this contract in strict accordance with the General Provisions, and the following designated specifications, schedules, drawings, and conditions:

WORK SHALL BE STARTED	WORK SHALL BE COMPLETED

Alterations. The following alterations were made in this contract before it was signed by the parties hereto:

In witness whereof, the parties hereto have executed this contract as of the date entered on the first page hereof.

THE UNITED STATES OF AMERICA	CONTRACTOR
By _____	_____ (Name of Contractor)
_____ (Official title)	By _____ (Signature)
	_____ (Title)

INSTRUCTIONS

1. The full name and business address of the Contractor must be inserted in the space provided on the face of the form. The Contractor shall sign in the space provided above with his usual signature and typewrite or print his name under the signature.

2. An officer of a corporation, a member of a partnership, or an agent signing for the Contractor shall place his signature and title after the word "By" under the name of the Contractor. A contract executed by an attorney or agent on behalf of the Contractor shall be accompanied by two authenticated copies of his power of attorney or other evidence of his authority to act on behalf of the Contractor.

U.S. GOVERNMENT PRINTING OFFICE: 1960 OF—572728—4d

INDEX OF GENERAL PROVISIONS
(Construction Contract)

1.1. Definitions

1.2. Definitions

2. Specifications and Drawings

3. Changes

4. Differing Site Conditions

5. Termination for Default – Damages for Delay – Time Extensions

6. Disputes

7. Payments to Contractor

8. Assignment of Claims

9. Material and Workmanship

10. Inspection and Acceptance

11. Superintendence by Contractor

12. Permits and Responsibilities

13. Conditions Affecting the Work

14. Other Contracts

15. Shop Drawings

16. Use and Possession Prior to Completion

17. Suspension of Work

18. Termination for Convenience of the Government – Construction

19. Payment of Interest on Contractors' Claims

20. Pricing of Adjustments

21. Patent Indemnity

22. Additional Bond Security

23. Examination of Records by Comptroller General

24. Buy American Act

25. Equal Opportunity

26. Covenant Against Contingent Fees

27. Officials Not to Benefit

28. Convict Labor

29. Utilization of Small Business Concerns

30. Utilization of Minority Business Enterprises

31. Federal, State and Local Taxes

32. Davis–Bacon Act

33. Contract Work Hours and Safety Standards Act – Overtime Compensation

34. Apprentices and Trainees

35. Payrolls and Basic Records

36. Compliance with Copeland Regulations

37. Withholding of Funds

38. Subcontracts

39. Contract Termination – Debarment

40. Disputes Concerning Labor Standards

41. Contractor Inspection System

42. Gratuities

43. Small Business Subcontracting Program (Maintenance, Repair and Construction)

44. Renegotiation

45. Notice and Assistance Regarding Patent and Copyright Infringement

46. Authorization and Consent

47. Composition of Contractor

48. Site Investigation

49. Protection of Existing Vegetation, Structures, Utilities, and Improvements

50. Operations and Storage Areas

51. Modification Proposals – Price Breakdown

52. Subcontractors

53. Cleaning Up

54. Additional Definitions

55. Accident Prevention

56. Government Inspectors

57. Rights in Shop Drawings

58. Minority Business Enterprises Subcontracting Program

59. Affirmative Action for Disabled Veterans and Veterans of the Vietnam Era

60. Value Engineering Incentive

61. Affirmative Action for Handicapped Workers

62. Clean Air and Water

63. Notice to the Government of Labor Disputes

64. Contract Prices – Bidding Schedule

65. Priorities, Allocations, and Allotments

66. Price Reduction for Defective Cost of Pricing Data – Price Adjustments

67. Interest

68. Audit by Department of Defense

69. Subcontractor Cost or Pricing Data – Price Adjustments

70.1 Government–Furnished Property (Short Form)

70.2 Government Property (Fixed Price)

71. Variations in Estimated Quantities

72. Progress Charts and Requirements for Overtime Work

73. Environmental Litigation

74. Local Affirmative Action Plan

GENERAL PROVISIONS
(Construction Contract)
Issued By: Department of the Army, Corps of Engineers

(General Provisions 1 through 31 and 32 through 40 are those prescribed by the General Services Administration in Standard Form 23–A, April 1975 edition and Standard Form 19–A, November 1972 edition, respectively, as amended pursuant to the latest revisions of the Armed Services Procurement Regulation and Engineer Contract Instructions, ER 1180–1–1.)

1.1 DEFINITIONS

(The following clause is applicable if the procurement instrument identification number is prefixed by the letters "DACW")

(a) The term "head of the agency" or "Secretary" as used herein means the Secretary of the Army; and the term "his duly authorized representative" means the Chief of Engineers, Department of the Army, or an individual or board designated by him.

(b) The term "Contracting Officer" as used herein means the person executing this contract on behalf of the Government and includes a duly appointed successor or authorized representative. (ASPR 7–602.1 & ECI 7–070)

1.2 DEFINITIONS (1964 JUN)

(The following clause is applicable if the procurement instrument identification number is prefixed by the letters "DACA")

(a) The term "head of the agency" or "Secretary" as used herein means the Secretary, the Under Secretary, any Assistant Secretary, or any other head or assistant head of the executive or military department or other Federal agency; and the term "his duly authorized representative" means any person or persons or board (other than the Contracting Officer) authorized to act for the head of the agency or the Secretary.

(b) The term "Contracting Officer" as used herein means the person executing this contract on behalf of the Government and includes a duly appointed successor or authorized representative. (ASPR 7–602.1)

2. SPECIFICATIONS AND DRAWINGS (1964 JUN)

The Contractor shall keep on the work a copy of the drawings and specifications and shall at all times give the Contracting Officer access thereto. Anything mentioned in the specifications and not shown on the drawings, or shown on the drawings and not mentioned in the specifications, shall be of like effect as if shown or mentioned in both. In case of difference between drawings and specifications, the specifications shall govern. In case of discrepancy either in the figures, in the drawings, or in the specifications, the matter shall be promptly submitted to the Contracting Officer, who shall promptly make a determination in writing. Any adjustment by the Contractor without such a determination shall be at his own risk and expense. The Contracting Officer shall furnish from time to time such detail drawings and other information as he may consider necessary, unless otherwise provided. (ASPR 7–602.2)

3. CHANGES (1968 FEB)

(a) The Contracting Officer may, at any time, without notice to the sureties, by written order designated or indicated to be a change order, make any change in the work within the general scope of the contract, including but not limited to changes:

(i) in the specifications (including drawings and designs);

(ii) in the method or manner of performance of the work;

(iii) in the Government–furnished facilities, equipment, materials, services, or site; or

(iv) directing acceleration in the performance of the work.

(b) Any other written order or an oral order (which terms as used in this paragraph (b) shall include direction, instruction, interpretation or determination) from the Contracting Officer, which causes any such change, shall be treated as a change order under this clause, *provided* that the Contractor gives the Contracting Officer written notice stating the date, circumstances, and source of the order and that the Contractor regards the order as a change order.

(c) Except as herein provided, no order, statement, or conduct of the Contracting Officer shall be treated as a change under this clause or entitle the Contractor to an equitable adjustment hereunder.

(d) If any change under this clause causes an increase or decrease in the Contractor's cost of, or the time required for, the performance of any part of the work under this contract, whether or not changed by any order, an equitable adjustment shall be made and the contract modified in writing accordingly: *Provided, however,* That except for claims based on defective specifications, no claim for any change under (b) above shall be allowed for any costs incurred more than 20 days before the Contractor gives written notice as therein required: *And provided further,* That in the case of defective specifications for which the Government is responsible, the equitable adjustment shall include any increased cost reasonably incurred by the Contractor in attempting to comply with such defective specifications.

(e) If the Contractor intends to assert a claim for an equitable adjustment under this clause, he must, within 30 days after receipt of a written change order under (a) above or the furnishing of a written notice under (b) above, submit to the Contracting Officer a written statement setting forth the general nature and monetary extent of such claim, unless this period is extended by the Government. The statement of claim hereunder may be included in the notice under (b) above.

(f) No claim by the Contractor for an equitable adjustment hereunder shall be allowed if asserted after final payment under this contract. (ASPR 7–602.3)

4. DIFFERING SITE CONDITIONS (1968 FEB)

(a) The Contractor shall promptly, and before such conditions are disturbed, notify the Contracting Officer in writing of: (1) subsurface or latent physical conditions at the site differing materially from those indicated in this contract, or (2) unknown physical conditions at the site, of an unusual nature, differing materially from those ordinarily encountered and generally recognized as inhering in work of the character provided for in this contract. The Contracting Officer shall promptly investigate the conditions, and if he finds that such conditions do materially so differ and cause an increase or decrease in the Contractor's cost of, or the time required for, performance of any part of the work under this

contract, whether or not changed as a result of such conditions, an equitable adjustment shall be made and the contract modified in writing accordingly.

(b) No claim of the Contractor under this clause shall be allowed unless the Contractor has given the notice required in (a) above; *provided,* however, the time prescribed therefor may be extended by the Government.

(c) No claim by the Contractor for an equitable adjustment hereunder shall be allowed if asserted after final payment under this contract. (ASPR 7–602.4)

5. TERMINATION FOR DEFAULT – DAMAGES FOR DELAY – TIME EXTENSIONS (1969 AUG)

(a) If the Contractor refuses or fails to prosecute the work, or any separable part thereof, with such diligence as will insure its completion within the time specified in this contract, or any extension thereof, or fails to complete said work within such time, the Government may, by written notice to the Contractor, terminate his right to proceed with the work or such part of the work as to which there has been delay. In such event the Government may take over the work and prosecute the same to completion, by contract or otherwise, and may take possession of and utilize in completing the work such materials, appliances, and plant as may be on the site of the work and necessary therefor. Whether or not the Contractor's right to proceed with the work is terminated, he and his sureties shall be liable for any damage to the Government resulting from his refusal or failure to complete the work within the specified time.

(b) If fixed and agreed liquidated damages are provided in the contract and if the Government so terminates the Contractor's right to proceed, the resulting damage will consist of such liquidated damages until such reasonable time as may be required for final completion of the work together with any increased costs occasioned the Government in completing the work.

(c) If fixed and agreed liquidated damages are provided in the contract and if the Government does not so terminate the Contractor's right to proceed, the resulting damage will consist of such liquidated damages until the work is completed or accepted.

(d) The Contractor's right to proceed shall not be so terminated nor the Contractor charged with resulting damage if:

(1) The delay in the completion of the work arises from causes other than normal weather beyond the control and without the fault or negligence of the Contractor, including but not restricted to, acts of God, acts of the public enemy, acts of the Government in either its sovereign or contractual capacity, acts of another contractor in the performance of a contract with the Government, fires, floods, epidemics, quarantine restrictions, strikes, freight embargoes, unusually severe weather, or delays of subcontractors or suppliers arising from causes other than normal weather beyond the control and without the fault or negligence of both the Contractor and such subcontractors or suppliers; and

(2) The Contractor, within 10 days from the beginning of any such delay (unless the Contracting Officer grants a further period of time before the date of final payment under the contract), notifies the Contracting Officer in writing of the causes of delay. The Contracting Officer shall ascertain the facts and the extent of the delay and extend the time for completing the work when, in his judgment, the findings of fact justify such an extension, and his findings of fact shall be final and conclusive on the parties, subject only to appeal as provided in the "Disputes" clause of this contract.

(e) If, after notice of termination of the Contractor's right to proceed under the provisions of this clause, it is determined for any reason that the Contractor was not in default under the provisions of this clause, or that the delay was excusable under the provisions of this clause, the rights and obligations of the parties shall, if the contract contains a clause providing for termination for convenience of the Government, be the same as if the notice of termination had been issued pursuant to such clause. If, in the foregoing circumstances, this contract does not contain a clause providing for termination for convenience of the Government, the contract shall be equitably adjusted to compensate for such termination and the contract modified accordingly; failure to agree to any such adjustment shall be a dispute concerning a question of fact within the meaning of the clause of this contract entitled "Disputes".

(f) The rights and remedies of the Government provided in this clause are in addition to any other rights and remedies provided by law or under this contract.

(g) As used in paragraph (d)(1) of this clause, the term "subcontractors or suppliers" means subcontractors or suppliers at any tier. (ASPR 7–602.5)

6. DISPUTES (1964 JUN)

(a) Except as otherwise provided in this contract, any dispute concerning a question of fact arising under this contract which is not disposed of by agreement shall be decided by the Contracting Officer, who shall reduce his decision to writing and mail or otherwise furnish a copy thereof to the Contractor. The decision of the Contracting Officer shall be final and conclusive unless, within 30 days from the date of receipt of such copy, the Contractor mails or otherwise furnishes to the Contracting Officer a written appeal addressed to the head of the agency involved. The decision of the head of the agency or his duly authorized representative for the determination of such appeals shall be final and conclusive. This provision shall not be pleaded in any suit involving a question of fact arising under this contract as limiting judicial review of any such decision to cases where fraud by such official or his representative or board is alleged: *Provided, however,* that any such decision shall be final and conclusive unless the same is fraudulent or capricious or arbitrary or so grossly erroneous as necessarily to imply bad faith or is not supported by substantial evidence. In connection with any appeal proceeding under this clause, the Contractor shall be afforded an opportunity to be heard and to offer evidence in support of his appeal. Pending final decision of a dispute hereunder, the Contractor shall proceed diligently with the performance of the contract and in accordance with the Contracting Officer's decision.

(b) This "Disputes" clause does not preclude consideration of questions of law in connection with decisions provided for in paragraph (a) above. Nothing in this contract, however, shall be construed as making final the decision of any administrative official, representative, or board on a question of law. (ASPR 7–602.6(a))

7. PAYMENTS TO CONTRACTOR (1976 MAR)

(a) The Government will pay the contract price as hereinafter provided.

(b) The Government will make progress payments monthly as the work proceeds, or at more frequent intervals as determined by the Contracting Officer, on estimates approved by the Contracting Officer. If requested by the Contracting Officer, the Contractor shall furnish a breakdown of the total contract price showing the amount included therein for each principal category of the work, in

such detail as requested, to provide a basis for determining progress payments. In the preparation of estimates the Contracting Officer, at his discretion, may authorize material delivered on the site and preparatory work done to be taken into consideration. Material delivered to the Contractor at locations other than the site may also be taken into consideration (1) if such consideration is specifically authorized by the contract and (2) if the Contractor furnishes satisfactory evidence that he has acquired title to such material and that it will be utilized on the work covered by this contract.

(c) In making such progress payments, there shall be retained 10 percent of the estimated amount until final completion and acceptance of the contract work. However, if the Contracting Officer finds that satisfactory progress was achieved during any period for which a progress payment is to be made, he may authorize such payment to be made in full without retention of a percentage. Also, whenever the work is substantially complete, the Contracting Officer shall retain an amount he considers adequate for the protection of the Government, and, at his discretion, may release to the Contractor all or a portion of any excess amount. Furthermore, on completion and acceptance of each separate building, public work, or other division of the contract, on which the price is stated separately in the contract, payment may be made therefor without retention of a percentage.

(d) All material and work covered by progress payments made shall thereupon become the sole property of the Government, but this provision shall not be construed as relieving the Contractor from the sole responsibility for all material and work upon which payments have been made or the restoration of any damaged work, or as waiving the right of the Government to require the fulfillment of all of the terms of the contract.

(e) Upon completion and acceptance of all work, the amount due the Contractor under this contract shall be paid upon the presentation of a properly executed voucher and after the Contractor shall have furnished the Government with a release of all claims against the Government arising by virtue of this contract, other than claims in stated amounts as may be specifically excepted by the Contractor from the operation of the release. If the Contractor's claim to amounts payable under the contract has been assigned under the Assignment of Claims Act of 1940, as amended (31 U.S.C. 203, 41 U.S.C. 15), a release may also be required of the assignee. (ASPR 7–602.7)

8. ASSIGNMENT OF CLAIMS (1976 OCT)

(a) Pursuant to the provisions of the Assignment of Claims Act of 1940, as amended (31 U.S.C. 203, 41 U.S.C. 15), if this contract provides for payments aggregating $1,000 or more, claims for moneys due or to become due the Contractor from the Government under this contract may be assigned to a bank, trust company, or other financing institution, including any Federal lending agency, and may thereafter be further assigned and reassigned to any such institution. Any such assignment or reassignment shall cover all amounts payable under this contract and not already paid, and shall not be made to more than one party, except that any such assignment or reassignment may be made to one party as agent or trustee for two or more parties participating in such financing. Unless otherwise provided in this contract, payments to assignee of any moneys due or to become due under this contract shall not, to the extent provided in said Act, as amended, be subject to reduction or setoff. (The preceding sentence applies only if this contract is made in time of war or national emergency as defined in said Act and is with the Department of Defense, the General Services Administration, the Energy Research and Development Administration, the National Aeronautics and Space Administration, the Federal Aviation Administration, or any other department or agency of the United States designated by the President pursuant to Clause 4 of the proviso of section 1 of the Assignment of Claims Act of 1940, as amended by the Act of May 15, 1951, 65 Stat. 41.)

(b) In no event shall copies of this contract or of any plans, specifications, or other similar documents relating to work under this contract, if marked "Top Secret," "Secret," or "Confidential," be furnished to any assignee of any claim arising under this contract or to any other person not entitled to receive the same. However, a copy of any part or all of this contract so marked may be furnished, or any information contained therein may be disclosed, to such assignee upon the prior written authorization of the Contracting Officer. (ASPR 7–602.8)

9. MATERIAL AND WORKMANSHIP (1964 JUN)

(a) Unless otherwise specifically provided in this contract, all equipment, material, and articles incorporated in the work covered by this contract are to be new and of the most suitable grade for the purpose intended. Unless otherwise specifically provided in this contract, reference to any equipment, material, article, or patented process, by trade name, make, or catalog number, shall be regarded as establishing a standard of quality and shall not be construed as limiting competition, and the Contractor may, at his option, use any equipment, material, article, or process which, in the judgment of the Contracting Officer, is equal to that named. The Contractor shall furnish to the Contracting Officer for his approval the name of the manufacturer, the model number, and other identifying data and information respecting the performance, capacity, nature, and rating of the machinery and mechanical and other equipment which the Contractor contemplates incorporating in the work. When required by this contract or when called for by the Contracting Officer, the Contractor shall furnish the Contracting Officer for approval full information concerning the material or articles which he contemplates incorporating in the work. When so directed, samples shall be submitted for approval at the Contractor's expense, with all shipping charges prepaid. Machinery, equipment, material, and articles installed or used without required approval shall be at the risk of subsequent rejection.

(b) All work under this contract shall be performed in a skillful and workmanlike manner. The Contracting Officer may, in writing, require the Contractor to remove from the work any employee the Contracting Officer deems incompetent, careless, or otherwise objectionable. (ASPR 7–602.9)

10. INSPECTION AND ACCEPTANCE (1976 OCT)

(a) All work (which term includes but is not restricted to materials, workmanship, and manufacture and fabrication of components) shall be subject to inspection and test by the Government at all reasonable times and at all places prior to acceptance. Any such inspection and test is for the sole benefit of the Government and shall not relieve the Contractor of the responsibility of providing quality control measures to assure that the work strictly complies with the contract requirements. No inspection or test by the Government shall be construed as constituting or implying acceptance. Inspection or test shall not relieve the Contractor of responsibility for damage to or loss of

the material prior to acceptance, nor in any way affect the continuing rights of the Government after acceptance of the completed work under the terms of paragraph (f) of this clause, except as hereinabove provided.

(b) The Contractor shall, without charge, replace any material or correct any workmanship found by the Government not to conform to the contract requirements, unless in the public interest the Government consents to accept such material or workmanship with an appropriate adjustment in contract price. The Contractor shall promptly segregate and remove rejected material from the premises.

(c) If the Contractor does not promptly replace rejected material or correct rejected workmanship, the Government (1) may, by contract or otherwise, replace such material or correct such workmanship and charge the cost thereof to the Contractor, or (2) may terminate the Contractor's right to proceed in accordance with the clause of this contract entitled "Termination for Default – Damages for Delay – Time Extensions."

(d) The Contractor shall furnish promptly, without additional charge, all facilities, labor, and material reasonably needed for performing such safe and convenient inspection and test as may be required by the Contracting Officer. All inspection and test by the Government shall be performed in such manner as not unnecessarily to delay the work. Special, full size, and performance tests shall be performed as described in this contract. The Government reserves the right to charge to the Contractor any additional cost of inspection or test when material or workmanship is not ready at the time specified by the Contractor for inspection or test or when reinspection or retest is necessitated by prior rejection.

(e) Should it be considered necessary or advisable by the Government at any time before acceptance of the entire work to make an examination of work already completed, by removing or tearing out same, the Contractor shall, on request, promptly furnish all necessary facilities, labor and material. If such work is found to be defective or nonconforming in any material respect, due to the fault of the Contractor or his subcontractors, he shall defray all the expenses of such examination and of satisfactory reconstruction. If, however, such work is found to meet the requirements of the contract, an equitable adjustment shall be made in the contract price to compensate the Contractor for the additional services involved in such examination and reconstruction and, if completion of the work has been delayed thereby, he shall, in addition, be granted a suitable extension of time.

(f) Unless otherwise provided in this contract, acceptance by the Government shall be made as promptly as practicable after completion and inspection of all work required by this contract, or that portion of the work that the Contracting Officer determines can be accepted separately. Acceptance shall be final and conclusive except as regards latent defects, fraud, or such gross mistakes as may amount to fraud or as regards the Government's rights under any warranty or guarantee. (ASPR 7–602.11)

11. SUPERINTENDENCE BY CONTRACTOR (1976 OCT)

The Contractor, at all times during performance and until the work is completed and accepted, shall give his personal superintendence to the work or have on the work a competent superintendent, satisfactory to the Contracting Officer and with authority to act for the Contractor. (ASPR 7–602.12)

12. PERMITS AND RESPONSIBILITIES (1964 JUN)

The Contractor shall, without additional expense to the Government, be responsible for obtaining any necessary licenses and permits, and for complying with any applicable Federal, State, and municipal laws, codes, and regulations, in connection with the prosecution of the work. He shall be similarly responsible for all damages to persons or property that occur as a result of his fault or negligence. He shall take proper safety and health precautions to protect the work the workers, the public, and the property of others. He shall also be responsible for all materials delivered and work performed until completion and acceptance of the entire construction work, except for any completed unit of construction thereof which theretofore may have been accepted. (ASPR 7–602.13)

13. CONDITIONS AFFECTING THE WORK (1964 JUN)

The Contractor shall be responsible for having taken steps reasonably necessary to ascertain the nature and location of the work and the general and local conditions which can affect the work or the cost thereof. Any failure by the Contractor to do so will not relieve him from responsibility for successfully performing the work without additional expense to the Government. The Government assumes no responsibility for any understanding or representations concerning conditions made by any of its officers or agents prior to the execution of this contract, unless such understanding or representations by the Government are expressly stated in the contract. (ASPR 7–602.14)

14. OTHER CONTRACTS (1964 JUN)

The Government may undertake or award other contracts for additional work and the Contractor shall fully cooperate with such other contractors and Government employees and carefully fit his own work to such additional work as may be directed by the Contracting Officer. The Contractor shall not commit or permit any act which will interfere with the performance of work by any other contractor or by Government employees. (ASPR 7–602.15)

15. SHOP DRAWINGS (1976 OCT)

(a) The term *"shop drawings"* includes drawings, diagrams, layouts, schematics, descriptive literature, illustrations, schedules, performance and test data; and similar materials furnished by the Contractor to explain in detail specific portions of the work required by the contract.

(b) If this contract requires shop drawings, the Contractor shall coordinate all such drawings, and review them for accuracy, completeness, and compliance with contract requirements and shall indicate his approval thereon as evidence of such coordination and review. Shop drawings submitted to the Contracting Officer without evidence of the Contractor's approval may be returned for resubmission. The Contracting Officer will indicate his approval or disapproval of the shop drawings and if not approved as submitted shall indicate his reasons therefor. Any work done prior to such approval shall be at the Contractor's risk. Approval by the Contracting Officer shall not relieve the Contractor from responsibility for any errors or omissions in such drawings, nor from responsibility for complying with the requirements of this contract, except with respect to variations described and approved in accordance with (c) below.

(c) If shop drawings show variations from the contract requirements, the Contractor shall describe such variations in writing, separate from the drawings, at the time of submission. If the Contracting Officer approves any such variation(s), he shall issue an appropriate contract

modification, except that, if the variation is minor and does not involve a change in price or in time of performance, a modification need not be issued.

(d) The Contractor shall submit to the Contracting Officer for approval four copies (unless otherwise indicated herein) of all shop drawings as called for under the various headings of these specifications. Three sets (unless otherwise indicated herein) of all shop drawings will be retained by the Contracting Officer and one set will be returned to the Contractor. (ASPR 7–602.54(a))

16. USE AND POSSESSION PRIOR TO COMPLETION (1976 OCT)

The Government shall have the right to take possession of or use any completed or partially completed part of the work. Prior to such possession or use, the Contracting Officer shall furnish the Contractor an itemized list of work remaining to be performed or corrected on such portions of the project as are to be possessed or used by the Government, *provided* that failure to list any item of work shall not relieve the Contractor of responsibility for compliance with the terms of the contract. Such possession or use shall not be deemed an acceptance of any work under the contract. While the Government has such possession or use, the Contractor, notwithstanding the provisions of the clause of this contract entitled "Permits and Responsibilities," shall be relieved of the responsibility for the loss or damage to the work resulting from the Government's possession or use. If such prior possession or use by the Government delays the progress of the work or causes additional expense to the Contractor, an equitable adjustment in the contract price or the time of completion will be made and the contract shall be modified in writing accordingly. (ASPR 7–602.39)

17. SUSPENSION OF WORK (1968 FEB)

(a) The Contracting Officer may order the Contractor in writing to suspend, delay, or interrupt all or any part of the work for such period of time as he may determine to be appropriate for the convenience of the Government.

(b) If the performance of all or any part of the work is, for an unreasonable period of time, suspended, delayed, or interrupted by an act of the Contracting Officer in the administration of this contract, or by his failure to act within the time specified in this contract (or if no time is specified, within a reasonable time), an adjustment shall be made for any increase in the cost of performance of this contract (excluding profit) necessarily caused by such unreasonable suspension, delay, or interruption and the contract modified in writing accordingly. However, no adjustment shall be made under this clause for any suspension, delay, or interruption to the extent (1) that performance would have been so suspended, delayed, or interrupted by any other cause, including the fault or negligence of the Contractor or (2) for which an equitable adjustment is provided for or excluded under any other provision of this contract.

(c) No claim under this clause shall be allowed (1) for any costs incurred more than 20 days before the Contractor shall have notified the Contracting Officer in writing of the act or failure to act involved (but this requirement shall not apply as to a claim resulting from a suspension order), and (2) unless the claim, in an amount stated, is asserted in writing as soon as practicable after the termination of such suspension, delay, or interruption, but not later than the date of final payment under the contract. (ASPR 7–602.46)

18. TERMINATION FOR CONVENIENCE OF THE GOVERNMENT–CONSTRUCTION (1974 APR)

(a) The performance of work under this contract may be terminated by the Government in accordance with this clause in whole, or from time to time in part, whenever the Contracting Officer shall determine that such termination is in the best interest of the Government. Any such termination shall be effected by delivery to the Contractor of a Notice of Termination specifying the extent to which performance of work under the contract is terminated, and the date upon which such termination becomes effective.

(b) After receipt of a Notice of Termination, and except as otherwise directed by the Contracting Officer, the Contractor shall:

(i) stop work under the contract on the date and to the extent specified in the Notice of Termination;

(ii) place no further orders or subcontracts for materials, services or facilities, except as may be necessary for completion of such portion of the work under the contract as is not terminated;

(iii) terminate all orders and subcontracts to the extent that they relate to the performance of work terminated by the Notice of Termination;

(iv) assign to the Government, in the manner, at the times, and to the extent directed by the Contracting Officer, all of the right, title, and interest of the Contractor under the orders and subcontracts so terminated, in which case the Government shall have the right, in its discretion, to settle or pay any or all claims arising out of the termination of such orders and subcontracts;

(v) settle all outstanding liabilities and all claims arising out of such termination of orders and subcontracts, with the approval or ratification of the Contracting Officer, to the extent he may require, which approval or ratification shall be final for all the purposes of this clause;

(vi) transfer title and deliver to the Government, in the manner, at the times, and to the extent, if any, directed by the Contracting Officer, (A) the fabricated or unfabricated parts, work in process, completed work supplies, and other material produced as a part of, or acquired in connection with the performance of, the work terminated by the Notice of Termination, and (B) the completed or partially completed plans, drawings, information, and other property which, if the contract had been completed, would have been required to be furnished to the Government;

(vii) use his best efforts to sell, in the manner, at the times, to the extent, and at the price or prices directed or authorized by the Contracting Officer, any property of the types referred to in (vi) above; *provided*, however, that the Contractor (A) shall not be required to extend credit to any purchaser, and (B) may acquire any such property under the conditions prescribed by and at a

price or prices approved by the Contracting Officer; and *provided further* that the proceeds of any such transfer or disposition shall be applied in reduction of any payments to be made by the Government to the Contractor under this contract or shall otherwise be credited to the price or cost of the work covered by this contract or paid in such other manner as the Contracting Officer may direct;

(viii) complete performance of such part of the work as shall not have been terminated by the Notice of Termination; and

(ix) take such action as may be necessary, or as the Contracting Officer may direct, for the protection and preservation of the property related to this contract which is in the possession of the Contractor and in which the Government has or may acquire an interest.

At any time after expiration of the plant clearance period, as defined in Section VIII, Armed Services Procurement Regulation, as it may be amended from time to time, the Contractor may submit to the Contracting Officer a list, certified as to quantity and quality, of any or all items of termination inventory not previously disposed of, exclusive of items the disposition of which has been directed or authorized by the Contracting Officer, and may request the Government to remove such items or enter into a storage agreement covering them. Not later than fifteen (15) days thereafter, the Government will accept title to such items and remove them or enter into a storage agreement covering the same; *provided,* that the list submitted shall be subject to verification by the Contracting Officer upon removal of the items, or if the items are stored, within forty–five (45) days from the date of submission of the list, and any necessary adjustment to correct the list as submitted shall be made prior to final settlement.

(c) After receipt of a Notice of Termination, the Contractor shall submit to the Contracting Officer his termination claim, in the form and with certification prescribed by the Contracting Officer. Such claim shall be submitted promptly but in no event later than one year from the effective date of termination, unless one or more extensions in writing are granted by the Contracting Officer, upon request of the Contractor made in writing within such one year period or authorized extension thereof. However, if the Contracting Officer determines that the facts justify such action, he may receive and act upon any such termination claim at any time after such one year period or any extension thereof. Upon failure of the Contractor to submit his termination claim within the time allowed, the Contracting Officer may determine, on the basis of information available to him, the amount, if any, due to the Contractor by reason of the termination and shall thereupon pay to the Contractor the amount so determined.

(d) Subject to the provisions of paragraph (c), the Contractor and the Contracting Officer may agree upon the whole or any part of the amount or amounts to be paid to the Contractor by reason of the total or partial termination of work pursuant to this clause, which amount or amounts may include a reasonable allowance for profit on work done; *provided,* that such agreed amount or amounts, exclusive of settlement costs, shall not exceed the total contract price as reduced by the amount of payments otherwise made and as further reduced by the contract price of work not terminated. The contract shall be amended accordingly, and the Contractor shall be paid the agreed amount. Nothing in paragraph (e) of this clause, prescribing the amount to be paid to the Contractor in the event of failure of the Contractor and the Contracting Oficer to agree upon the whole amount to be paid to the Contractor by reason of the termination of work pursuant to this clause, shall be deemed to limit, restrict, or otherwise determine or affect the amount or amounts which may be agreed upon to be paid to the Contractor pursuant to this paragraph (d).

(e) In the event of the failure of the Contractor and the Contracting Officer to agree, as provided in paragraph (d), upon the whole amount to be paid to the Contractor by reason of the termination of work pursuant to this clause, the Contracting Officer shall pay to the Contractor the amounts determined by the Contracting Officer as follows, but without duplication of any amounts agreed upon in accordance with paragraph (d):

(i) with respect to all contract work performed prior to the effective date of the Notice of Termination, the total (without duplication of any items) of–

(A) the cost of such work;

(B) the cost of settling and paying claims arising out of the termination of work under subcontracts or orders as provided in paragraph (b)(v) above, exclusive of the amounts paid or payable on account of supplies or materials delivered or services furnished by the subcontractor prior to the effective date of the Notice of Termination of Work under this contract, which amounts shall be included in the cost on account of which payment is made under (A) above; and

(C) a sum, as profit on (A) above, determined by the Contracting Officer pursuant to 8–303 of the Armed Services Procurement Regulation, in effect as of the date of execution of this contract, to be fair and reasonable; *provided,* however, that if it appears that the Contractor would have sustained a loss on the entire contract had it been completed, no profit shall be included or allowed under this subdivision (C) and an appropriate adjustment shall be made reducing the amount of the settlement to reflect the indicated rate of loss; and

(ii) the reasonable cost of the preservation and protection of property incurred pursuant to paragraph (b)(ix); and any other reasonable cost incidental to termination of work under this contract, including expense incidental to the determination of the amount due to the Contractor as the result of the termination of work under this contract.

The total sum to be paid to the Contractor under (i) above shall not exceed the total contract price as reduced by the amount of payments otherwise made and as further reduced by the contract price of work not terminated. Except for normal spoilage, and except to the extent that the Government shall have otherwise expressly assumed the

risk of loss, there shall be excluded from the amounts payable to the Contractor under (i) above, the fair value, as determined by the Contracting Officer, of property which is destroyed, lost, stolen, or damaged so as to become undeliverable to the Government, or to a buyer pursuant to paragraph (b)(vii).

(f) Costs claimed, agreed to, or determined pursuant to (c), (d), (e), and (i) hereof shall be in accordance with Section XV of the Armed Services Procurement Regulation as in effect on the date of this contract.

(g) The Contractor shall have the right of appeal, under the clause of this contract entitled "Disputes", from any determination made by the Contracting Officer under paragraph (c), (e), or (i) hereof, except that if the Contractor has failed to submit his claim within the time provided in paragraph (c) or (i) hereof, and has failed to request extension of such time, he shall have no such right of appeal. In any case where the Contracting Officer has made a determination of the amount due under paragraph (c), (e) or (i) hereof, the Government shall pay to the Contractor the following: (i) if there is no right of appeal hereunder or if no timely appeal has been taken, the amount so determined by the Contracting Officer, or (ii) if an appeal has been taken, the amount finally determined on such appeal.

(h) In arriving at the amount due the Contractor under this clause there shall be deducted (i) all unliquidated advance or other payments on account theretofore made to the Contractor, applicable to the terminated portion of this contract, (ii) any claim which the Government may have against the Contractor in connection with this contract, and (iii) the agreed price for, or the proceeds of sale of, any materials, supplies, or other things acquired by the Contractor or sold, pursuant to the provisions of this clause, and not otherwise recovered by or credited to the Government.

(i) If the termination hereunder be partial, the Contractor may file with the Contracting Officer a claim for an equitable adjustment of the price or prices specified in the contract relating to the continued portion of the contract (the portion not terminated by the Notice of Termination), and such equitable adjustment as may be agreed upon shall be made in such price or prices. Any claim by the Contractor for an equitable adjustment under this clause must be asserted within ninety (90) days from the effective date of the termination notice, unless an extension is granted in writing by the Contracting Officer.

(j) The Government may from time to time, under such terms and conditions as it may prescribe, make partial payments and payments on account against costs incurred by the Contractor in connection with the terminated portion of this contract whenever in the opinion of the Contracting Officer the aggregate of such payments shall be within the amount to which the Contractor will be entitled hereunder. If the total of such payments is in excess of the amount finally agreed or determined to be due under this clause, such excess shall be payable by the Contractor to the Government upon demand, together with interest computed at the rate established by the Secretary of the Treasury pursuant to Public Law 92–41, 85 STAT 97 for the Renegotiation Board, for the period from the date such excess payment is received by the Contractor to the date on which such excess is repaid to the Government; *provided*, however, that no interest shall be charged with respect to any such excess payment attributable to a reduction in the Contractor's claim by reason of retention or other disposition of termination inventory until ten days after the date of such retention or disposition, or such later date as determined by the Contracting Officer by reason of the circumstances.

(k) Unless otherwise provided for in this contract, or by applicable statute, the Contractor shall – from the effective date of termination until the expiration of three years after final settlement under this contract – preserve and make available to the Government at all reasonable times at the office of the Contractor but without direct charge to the Government, all his books, records, documents and other evidence bearing on the costs and expenses of the Contractor under this contract and relating to the work terminated hereunder, or, to the extent approved by the Contracting Officer, photographs, microphotographs, or other authentic reproductions thereof. (ASPR 7–602.29(a))

19. PAYMENT OF INTEREST ON CONTRACTORS' CLAIMS (1976 JUL)

(a) If an appeal is filed by the Contractor from a final decision of the Contracting Officer under the "Disputes" clause of this contract, denying a claim arising under the contract, simple interest on the amount of the claim finally determined owed by the Government shall be payable to the Contractor. Such interest shall be at the rate established by the Secretary of the Treasury pursuant to Public Law 92–41; 85 STAT 97, from the date the Contractor furnishes to the Contracting Officer his written appeal under the "Disputes" clause of this contract, to the date of (i) a final judgment by a court of competent jurisdiction, or (ii) mailing to the Contractor of a supplemental agreement for execution either confirming completed negotiations between the parties or carrying out a decision of a board of contract appeals.

(b) Notwithstanding (a) above, (i) interest shall be applied only from the date payment was due, if such date is later than the filing of appeal; and (ii) interest shall not be paid for any period of time that the Contracting Officer determines the Contractor has unduly delayed in pursuing his remedies before a board of contract appeals or a court of competent jurisdiction. (ASPR 7–104.82)

20. PRICING OF ADJUSTMENTS (1970 JUL)

When costs are a factor in any determination of a contract price adjustment pursuant to the "Changes" clause or any other provision of this contract, such costs shall be in accordance with Section XV of the Armed Services Procurement Regulation as in effect on the date of this contract. (ASPR 7–103.26)

21. PATENT INDEMNITY (1964 JUN)

Except as otherwise provided, the Contractor agrees to indemnify the Government and its officers, agents, and employees against liability, including costs and expenses, for infringement upon any Letters Patent of the United States (except Letters Patent issued upon an application which is now or may hereafter be, for reasons of national security, ordered by the Government to be kept secret or otherwise withheld from issue) arising out of the performance of this contract or out of the use or disposal by or for the account of the Government of supplies furnished or construction work performed hereunder. (ASPR 7–602.16(a))

22. ADDITIONAL BOND SECURITY (1976 OCT)

If any surety upon any bond furnished in connection with this contract becomes unacceptable to the Government, or if any such surety fails to furnish reports as to his financial condition from time to time as requested by the Government, or if the contract price is increased to such an extent that the penal sum of any bond becomes

inadequate in the opinion of the Contracting Officer, the Contractor shall promptly furnish such additional security as may be required from time to time to protect the interests of the Government and of persons supplying labor or materials in the prosecution of the work contemplated by this contract. (ASPR 7-602.17)

23. EXAMINATION OF RECORDS BY COMPTROLLER GENERAL (1975 JUN)

(a) This clause is applicable if the amount of this contract exceeds $10,000 and was entered into by means of negotiation, including small business restricted advertising but is not applicable if this contract was entered into by means of formal advertising.

(b) The Contractor agrees that the Comptroller General of the United States or any of his duly authorized representatives shall, until the expiration of three years after final payment under this contract or such lesser time specified in either Appendix M of the Armed Services Procurement Regulation or the Federal Procurement Regulations Part 1-20, as appropriate, have access to and the right to examine any directly pertinent books, documents, papers, and records of the Contractor involving transactions related to this contract.

(c) The Contractor further agrees to include in all his subcontracts hereunder a provision to the effect that the subcontractor agrees that the Comptroller General of the United States or any of his duly authorized representatives shall, until the expiration of three years after final payment under the subcontract or such lesser time specified in either Appendix M of the Armed Services Procurement Regulation or the Federal Procurement Regulations Part 1-20, as appropriate, have access to and the right to examine any directly pertinent books, documents, papers, and records of such subcontractor, involving transactions related to the subcontract. The term "subcontract" as used in this clause excludes (i) purchase orders not exceeding $10,000 and (ii) subcontracts or purchase orders for public utility services at rates established for uniform applicability to the general public.

(d) The periods of access and examination described in (b) and (c) above for records which relate to (i) appeals under the "Disputes" clause of this contract, (ii) litigation or the settlement of claims arising out of the performance of this contract, or (iii) costs and expenses of this contract as to which exception has been taken by the Comptroller General or any of his duly authorized representatives, shall continue until such appeals, litigation, claims or exceptions have been disposed of. (ASPR 7-104.15)

24. BUY AMERICAN ACT (1966 OCT)

(a) *Agreement.* In accordance with the Buy American Act (41 U.S.C. 10a-10d), the Contractor agrees that only domestic construction material will be used (by the Contractor, subcontractors, materialmen, and suppliers) in the performance of this contract, except for nondomestic construction material listed in the "Nondomestic Construction Materials" clause, if any, of this contract.

(b) *Domestic construction material.* "Construction material" means any article, material, or supply brought to the construction site for incorporation in the building or work. An unmanufactured construction material is a "domestic construction material" if it has been mined or produced in the United States. A manufactured construction material is a "domestic construction material" if it has been manufactured in the United States and if the cost of its components which have been mined, produced, or manufactured in the United States exceeds 50 percent of the cost of all its components. "Component" means any article, material, or supply directly incorporated in a construction material.

(c) *Domestic component.* A component shall be considered to have been "mined, produced, or manufactured in the United States" (regardless of its source in fact) if the article, material, or supply in which it is incorporated was manufactured in the United States and the component is of a class or kind determined by the Government to be not mined, produced, or manufactured in the United States in sufficient and reasonably available commercial quantities and of a satisfactory quality. (ASPR 7-602.20)

25. EQUAL OPPORTUNITY (1976 JUL)

(The following clause is not applicable if this contract is exempt under ASPR 12-805. Exemptions include contracts and subcontracts not exceeding $10,000, and work under contracts and subcontracts which is to be performed outside the United States by employees who were not recruited within the United States. The requirements of paragraph (3) of the clause shall be satisfied whenever the prime contractor or subcontractor posts copies of the notification prescribed by or pursuant to paragraph (1) of the clause (ASPR 12-804(e)(2).)

During the performance of this contract, the Contractor agrees as follows:

(1) The Contractor will not discriminate against any employee or applicant for employment because of race, color, religion, sex, or national origin. The Contractor will take affirmative action to ensure that applicants are employed, and that employees are treated during employment, without regard to their race, color, religion, sex, or national origin. Such action shall include but not be limited to the following: Employment, upgrading, demotion, or transfer, recruitment or recruitment advertising: layoff or termination, rates of pay or other forms of compensation; and selection for training, including apprenticeship. The Contractor agrees to post in conspicuous places, available to employees and applicants for employment, notices to be provided by the Contracting Officer setting forth the provisions of this Equal Opportunity clause.

(2) The Contractor will, in all solicitations or advertisements for employees placed by or on behalf of the Contractor, state that all qualified applicants will receive consideration for employment without regard to race, color, religion, sex, or national origin.

(3) The Contractor will send to each labor union or representative of workers with which he has a collective bargaining agreement or other contract or understanding a notice to be provided by the agency Contracting Officer, advising the labor union or workers' representative of the contractor's commitments under this Equal Opportunity clause and shall post copies of the notice in conspicuous places available to employees and applicants for employment.

(4) The Contractor will comply with all provisions of Executive Order No. 11246 of September 24, 1965, as amended by Executive Order No. 11375 of October 13, 1967, and of the rules, regulations, and relevant orders of the Secretary of Labor.

(5) The Contractor will furnish all information and reports required by Executive Order No. 11246 of September 24, 1965, as amended by Executive Order No. 11375 of October 13, 1967, and by the rules, regulations, and orders of the Secretary of Labor or pursuant thereto, and will permit access to his books, records, and accounts by the contracting agency and the Secretary of Labor for purposes of investigation to ascertain compliance with such rules, regulations and orders.

(6) In the event of the Contractor's noncompliance with the Equal Opportunity clause of this contract or with any of the said rules, regulations, or orders, this contract

may be canceled, terminated or suspended in whole or in part, and the Contractor may be declared ineligible for further Government contracts in accordance with procedures authorized in Executive Order No. 11246 of September 24, 1965 as amended by Executive Order No. 11375 of October 13, 1967, and such other sanctions may be imposed and remedies invoked as provided in Executive Order No. 11246 of September 24, 1965, as amended by Executive Order No. 11375 of October 13, 1967, or by rule, regulation, or order of the Secretary of Labor, or as otherwise provided by law. *

(7) The Contractor will include the provisions of paragraphs (1) through (7) in every subcontract or purchase order unless exempted by rules, regulations, or orders of the Secretary of Labor issued pursuant to Section 204 of Executive Order No. 11246 of September 24, 1965, as amended by Executive Order No. 11375 of October 13, 1967, so that such provisions will be binding upon each subcontractor or vendor. The Contractor will take such action with respect to any subcontract or purchase order as the contracting agency may direct as a means of enforcing such provisions including sanctions for noncompliance: *Provided,* however, that in the event the Contractor becomes involved in, or is threatened with, litigation with a subcontractor or vendor as a result of such direction by the contracting agency, the Contractor may request the United States to enter into such litigation to protect the interests of the United States. (ASPR 7–103.18(a))

26. COVENANT AGAINST CONTINGENT FEES (1958 JAN)

The contractor warrants that no person or selling agency has been employed or retained to solicit or secure this contract upon an agreement or understanding for a commission, percentage, brokerage, or contingent fee, excepting bona fide employees or bona fide established commercial or selling agencies maintained by the Contractor for the purpose of securing business. For breach or violation of this warranty the Government shall have the right to annul this contract without liability or in its discretion, to deduct from the contract price or consideration, or otherwise recover, the full amount of such commission, percentage, brokerage or contingent fee. (ASPR 7–103.20)

27. OFFICIALS NOT TO BENEFIT (1949 JUL)

No member of or delegate to Congress, or resident commissioner, shall be admitted to any share or part of this contract, or to any benefit that may arise therefrom; but this provision shall not be construed to extend to this contract if made with a corporation for its general benefit. (ASPR 7–103.19)

28. CONVICT LABOR (1975 OCT)

In connection with the performance of work under this contract, the Contractor agrees not to employ any person undergoing sentence of imprisonment except as provided by Public Law 89–176, September 10, 1965 (18 U.S.C. 4082(c)(2)) and Executive Order 11755, December 29, 1973. (ASPR 7–104.17)

29. UTILIZATION OF SMALL BUSINESS CONCERNS (1958 JAN)

(a) It is the policy of the Government as declared by the Congress that a fair proportion of the purchases and contracts for supplies and services for the Government be placed with small business concerns.

(b) The Contractor agrees to accomplish the maximum amount of subcontracting to small business concerns that the Contractor finds to be consistent with the efficient performance of this contract. (ASPR 7–104.14(a))

30. UTILIZATION OF MINORITY BUSINESS ENTERPRISES (1971 NOV)

(a) It is the policy of the Government that Minority Business Enterprises shall have the maximum practicable opportunity to participate in the performance of Government contracts.

(b) The Contractor agrees to use his best efforts to carry out this policy in the award of his subcontracts to the fullest extent consistent with the efficient performance of this contract. As used in this contract, the term "minority business enterprise" means a business, at least 50 percent of which is owned by minority group members or, in case of publicly–owned businesses, at least 51 percent of the stock of which is owned by minority group members. For the purposes of this definition, minority group members are Negroes, Spanish–speaking American persons, American–Orientals, American–Indians, American Eskimos, and American Aleuts. Contractors may rely on written representations by subcontractors regarding their status as minority business enterprises in lieu of an independent investigation. (ASPR 7–104.36(a))

31. FEDERAL, STATE, AND LOCAL TAXES (1971 NOV)

(a) Except as may be otherwise provided in this contract, the contract price includes all applicable Federal, State, and local taxes and duties.

(b) Nevertheless, with respect to any Federal excise tax or duty on the transactions or property covered by this contract, if a statute, court decision, written ruling, or regulation takes effect after the contract date, and –

(1) results in the Contractor being required to pay or bear the burden of any such Federal excise tax or duty or increase in the rate thereof which would not otherwise have been payable on such transactions or property, the contract price shall be increased by the amount of such tax or duty or rate increase, *provided* the Contractor warrants in writing that no amount for such newly imposed Federal excise tax or duty or rate increase was included in the contract price as a contingency reserve or otherwise; or

(2) results in the Contractor not being required to pay or bear the burden of, or in his obtaining a refund or drawback of, any such Federal excise tax or duty which would otherwise have been payable on such transactions or property or which was the basis of an increase in the contract price, the contract price shall be decreased by the amount of the relief, refund, or drawback or that amount shall be paid to the Government, as directed by the Contracting Officer. The contract price shall be similarly decreased if the Contractor, through his fault or negligence or his failure to follow instructions of the Contracting Officer, is required to pay or bear the burden of, or does not obtain a refund or drawback of, any such Federal excise tax or duty.

(c) Paragraph (b) above shall not be applicable to social security taxes or to any other employment tax.

(d) No adjustment of less than $100 shall be made in the contract price pursuant to paragraph (b) above.

(e) As used in paragraph (b) above, the term "contract date" means the date set for bid opening, or if this is a negotiated contract, the contract date. As to additional supplies or services procured by modification to this contract, the term "contract date" means the date of such modification.

(f) Unless there does not exist any reasonable basis to sustain an exemption, the Government upon the

request of the Contractor shall, without further liability, furnish evidence appropriate to establish exemption from any Federal, State, or local tax; *provided* that, evidence appropriate to establish exemption from any Federal excise tax or duty which may give rise to either an increase or decrease in the contract price will be furnished only at the discretion of the Government.

(g) The Contractor shall promptly notify the Contracting Officer of matters which will result in either an increase or decrease in the contract price and shall take action with respect thereto as directed by the Contracting Officer. (ASPR 7–103.10(a))

32. DAVIS–BACON ACT (40 U.S.C. 276a–276a–7)

(a) All mechanics and laborers, including apprentices and trainees, employed or working directly upon the site of the work shall be paid unconditionally and not less often than once a week, and without subsequent deduction or rebate on any account (except such payroll deductions as are permitted by the Copeland Regulations, 29 CFR Part 3), the full amounts due at time of payment computed at wage rates not less than the aggregate of the basic hourly rates and the rates of payments, contributions, or costs for any fringe benefits contained in the wage determination decision of the Secretary of Labor which is attached hereto and made a part hereof, regardless of any contractual relationship which may be alleged to exist between the Contractor or subcontractor and such laborers and mechanics. A copy of such wage determination decision shall be kept posted by the Contractor at the site of the work in a prominent place where it can be easily seen by the workers.

(b) The Contractor may discharge his obligation under this clause to workers in any classification for which the wage determination decision contains:

(1) Only a basic hourly rate of pay, by making payment at not less than such basic hourly rate, except as otherwise provided in the Copeland Regulations. (29 CFR Part 3); or

(2) Both a basic hourly rate of pay and fringe benefits payments, by making payment in cash, by irrevocably making contributions pursuant to a fund, plan, or program for, and/or by assuming an enforceable commitment to bear the cost of, bona fide fringe benefits contemplated by the Davis–Bacon Act, or by any combination thereof. Contributions made, or costs assumed, on other than a weekly basis shall be considered as having been constructively made or assumed during a weekly period to the extent that they apply to such period. Where a fringe benefit is expressed in a wage determination in any manner other than as an hourly rate and the Contractor pays a cash equivalent or provides an alternative fringe benefit, he shall furnish information with his payrolls showing how he determined that the cost incurred to make the cash payment or to provide the alternative fringe benefit is equal to the cost of the wage determination fringe benefit. In any case where the Contractor provides a fringe benefit different from any contained in the wage determination, he shall similarly show how he arrived at the hourly rate shown therefor. In the event of disagreement between or among the interested parties as to an equivalent of any fringe benefit, the Contracting Officer shall submit the question, together with his recommendation, to the Secretary of Labor for final determination.

(c) The assumption of an enforceable commitment to bear the cost of fringe benefits, or the provision of any fringe benefits not expressly listed in section 1(b)(2) of the Davis–Bacon Act or in the wage determination decision forming a part of the contract, may be considered as payment of wages only with the approval of the Secretary of Labor pursuant to a written request by the Contractor. The Secretary of Labor may require the Contractor to set aside assets, in a separate account, to meet his obligations under any unfunded plan or program.

(d) The Contracting Officer shall require that any class of laborers or mechanics, including apprentices and trainees, which is not listed in the wage determination decision and which is to be employed under the contract shall be classified or reclassified conformably to the wage determination decision, and shall report the action taken to the Secretary of Labor. If the interested parties cannot agree on the proper classification or reclassification of a particular class of laborers or mechanics to be used, the Contracting Officer shall submit the question, together with his recommendation, to the Secretary of Labor for final determination. Apprentices and trainees may be added under this clause only where they are employed pursuant to an apprenticeship or trainee program meeting the requirements of the Apprentices and Trainees clause below.

(e) In the event it is found by the Contracting Officer that any laborer or mechanic, including apprentices and trainees, employed by the Contractor or any subcontractor directly on the site of the work covered by this contract has been or is being paid at a rate of wages less than the rate of wages required by paragraph (a) of this clause, the Contracting Officer may (1) by written notice to the Government Prime Contractor terminate his right to proceed with the work, or such part of the work as to which there has been a failure to pay said required wages, and (2) prosecute the work to completion by contract or otherwise, whereupon such Contractor and Subcontractor and his sureties shall be liable to the Government for any excess costs occasioned the Government thereby.

(f) Paragraphs (a) through (e) of the clause shall apply to this contract to the extent that it is (1) a prime contract with the Government subject to the Davis–Bacon Act or (2) a subcontract also subject to the Davis–Bacon Act under such prime contract.

33. CONTRACT WORK HOURS AND SAFETY STANDARDS ACT – OVERTIME COMPENSATION (40 U.S.C. 327–333)

This contract is subject to the Contract Work Hours and Safety Standards Act and to the applicable rules, regulations, and interpretations of the Secretary of Labor.

(a) The Contractor shall not require or permit any laborer or mechanic, including apprentices, trainees, watchmen, and guards, in any workweek in which he is employed on any work under this contract to work in excess of 8 hours in any calendar day or in excess of 40 hours in such workweek on work subject to the provisions of the Contract Work Hours and Safety Standards Act unless such laborer or mechanic, including apprentices, trainees, watchmen, and guards, receives compensation at a rate not less than 1½ times his basic rate of pay for all such hours worked in excess of 8 hours in any calendar day or in excess of 40 hours in such workweek, whichever is the greater number of overtime hours. The "basic rate of pay," as used in this clause, shall be the amount paid per hour exclusive of the Contractor's contribution or cost for fringe benefits, and any cash payment made in lieu of providing fringe benefits, or the basic hourly rate contained in the wage determination, whichever is greater.

(b) In the event of any violation of the provisions of paragraph (a), the Contractor shall be liable to any affected employee for any amounts due, and to the United States for liquidated damages. Such liquidated damages shall be computed with respect to each individual laborer or mechanic, including an apprentice, trainee, watchman, or

guard, employed in violation of the provisions of paragraph (a) in the sum of $10 for each calendar day on which such employee was required or permitted to be employed on such work in excess of 8 hours or in excess of the standard workweek of 40 hours without payment of the overtime wages required by paragraph (a).

34. APPRENTICES AND TRAINEES

(a) Apprentices will be permitted to work at less than the predetermined rate for the work they performed when they are employed and individually registered in a bona fide apprenticeship program registered with the U.S. Department of Labor, Manpower Administration, Bureau of Apprenticeship and Training, or with the State Apprenticeship Agency recognized by the Bureau, or if the person is employed in his first 90 days of probationary employment as an apprentice in such an apprenticeship program, who is not individually registered in the program, but who has been certified by the Bureau of Apprenticeship and Training or the State Apprenticeship Agency (where appropriate) to be eligible for probationary employment as an apprentice. The allowable ratio of apprentices to journeyman in any craft classification employed on this contract shall not be greater than the ratio permitted to the contractor as to his entire work force under the registered program. Any employee listed on a payroll at an apprentice wage rate, who is not a trainee as defined in subparagraph (b) of this clause or is not registered or otherwise employed as stated above, shall be paid the wage rate determined by the Secretary of Labor for the classification of work he actually performed. The contractor or subcontractor will be required to furnish to the contracting officer or a representative of the Wage–Hour Division of the U.S. Department of Labor written evidence of the registration of his program and apprentices as well as the appropriate ratios and wage rates (expressed in percentages of the journeyman hourly rates), for the area of construction prior to using any apprentices on the contract work. The wage paid apprentices shall be not less than the appropriate percentage of the journeyman's rate contained in the applicable wage determination.

(b) Trainees will be permitted to work at less than the predetermined rate for the work performed when they are employed pursuant to and individually registered in a program which has received prior approval, evidenced by formal certification, by the U.S. Department of Labor, Manpower Administration, Bureau of Apprenticeship and Training. The ratio of trainees to journeymen employed on this contract shall not be greater than permitted under the plan approved by the Bureau of Apprenticeship and Training. Every trainee must be paid at not less than the rate specified in the approved program for his level of progress. Any employee listed on the payroll at a trainee rate who is not registered and not participating in a training plan approved by the Bureau of Apprenticeship and Training shall be paid not less than the wage rate determined by the Secretary of Labor for the classification of work he actually performed. The contractor or subcontractor will be required to furnish the contracting officer or representative of the Wage–Hour Division of the U.S. Department of Labor written evidence of the certification of his program, the registration of the trainees, and the ratios and wage rates prescribed in that program. In the event the Bureau of Apprenticeship and Training withdraws the approval of a training program, the contractor will no longer be permitted to utilize trainees at less than the applicable predetermined rate for the work performed until an acceptable program is approved.

(c) The utilization of apprentices, trainees and journeymen under this part shall be in conformity with the equal employment opportunity requirements of this contract.

35. PAYROLLS AND BASIC RECORDS

(a) The Contractor shall maintain payrolls and basic records relating thereto during the course of the work and shall preserve them for a period of three (3) years thereafter for all laborers and mechanics, including apprentices, trainees, watchmen, and guards working at the site of the work. Such records shall contain the name and address of each such employee, his correct classification, rate of pay (including rates of contributions for, or costs assumed to provide, fringe benefits), daily and weekly number of hours worked, deductions made and actual wages paid. Whenever the Contractor has obtained approval from the Secretary of Labor as provided in paragraph (c) of the clause entitled "Davis–Bacon Act," he shall maintain records which show the commitment, its approval, written communication of the plan or program to the laborers or mechanics affected, and the costs anticipated or incurred under the plan or program.

(b) The Contractor shall submit weekly a copy of all payrolls to the Contracting Officer. The Government Prime Contractor shall be responsible for the submission of copies of payrolls of all subcontractors. The copy shall be accompanied by a statement signed by the Contractor indicating that the payrolls are correct and complete, that the wage rates contained therein are not less than those determined by the Secretary of Labor, and that the classifications set forth for each laborer or mechanic, including apprentices and trainees, conform with the work he performed. Submission of the "Weekly Statement of Compliance" required under this contract and the Copeland Regulations of the Secretary of Labor (29 CFR Part 3) shall satisfy the requirement for submission of the above statement. The Contractor shall submit also a copy of any approval by the Secretary of Labor with respect to fringe benefits which is required by paragraph (c) of the clause entitled "Davis–Bacon Act."

(c) The Contractor shall make the records required under this clause available for inspection by authorized representatives of the Contracting Officer and the Department of Labor, and shall permit such representatives to interview employees during working hours on the job.

36. COMPLIANCE WITH COPELAND REGULATIONS

The Contractor shall comply with the Copeland Regulations of the Secretary of Labor (29 CFR Part 3) which are incorporated herein by reference.

37. WITHHOLDING OF FUNDS

(a) The Contracting Officer may withhold or cause to be withheld from the Government Prime Contractor so much of the accrued payments or advances as may be considered necessary (1) to pay laborers and mechanics, including apprentices, trainees, watchmen, and guards employed by the Contractor or any subcontractor on the work the full amount of wages required by the contract, and (2) to satisfy any liability of any Contractor and Subcontractor for liquidated damages under paragraph (b) of the clause entitled "Contract Work Hours and Safety Standards Act–Overtime Compensation."

(b) If any Contractor or subcontractor fails to pay any laborer, mechanic, apprentice, trainee, watchman, or guard employed or working on the site of work, all or part of the wages required by the contract, the Contracting Officer may, after written notice to the Government Prime

Contractor, take such action as may be necessary to cause suspension of any further payments or advances until such violations have ceased.

38. SUBCONTRACTS (1972 FEB)

The Contractor agrees to insert the clauses hereof entitled "Davis–Bacon Act," "Contract Work Hours and Safety Standards Act–Overtime Compensation," "Apprentices and Trainees," "Payrolls and Basic Records," "Compliance with Copeland Regulations," "Withholding of Funds," "Subcontracts," and "Contract Termination–Debarment" in all subcontracts. The term "Contractor" as used in such clauses in any subcontract shall be deemed to refer to the subcontractor except in the phrase "Government Prime Contractor." (ASPR 7–602.23(a)(vii)

39. CONTRACT TERMINATION–DEBARMENT (1972 APR)

A breach of the clauses hereof entitled "Davis–Bacon Act," "Contract Work Hours and Safety Standards Act–Overtime Compensation," "Apprentices and Trainees," "Payrolls and Basic Records," "Compliance with Copeland Regulations," "Withholding of Funds," and "Subcontracts" may be grounds for termination of the contract, and for debarment as provided in 29 CFR 5.6 (ASPR 7–602.23(a)(viii)

40. DISPUTES CONCERNING LABOR STANDARDS (1965 JAN)

Disputes arising out of the labor standards provisions of this contract shall be subject to the Disputes clause except to the extent such disputes involve the meaning of classifications or wage rates contained in the wage determination decision of the Secretary of Labor or the applicability of the labor provisions of this contract which questions shall be referred to the Secretary of Labor in accordance with the procedures of the Department of Labor. (ASPR 7–603.26)

41. CONTRACTOR INSPECTION SYSTEM (1964 NOV)

The Contractor shall (i) maintain an adequate inspection system and perform such inspections as will assure that the work performed under the contract conforms to contract requirements, and (ii) maintain and make available to the Government adequate records of such inspections. (ASPR 7–602.10(a))

42. GRATUITIES (1952 MAR)

(a) The Government may, by written notice to the Contractor, terminate the right of the Contractor to proceed under this contract if it is found, after notice and hearing, by the Secretary or his duly authorized representative, that gratuities (in the form of entertainment, gifts, or otherwise) were offered or given by the Contractor, or any agent or representative of the Contractor, to any officer or employee of the Government with a view toward securing a contract or securing favorable treatment with respect to the awarding or amending, or the making of any determinations with respect to the performing of such contract; *provided,* that the existence of the facts upon which the Secretary or his duly authorized representative makes such findings shall be in issue and may be reviewed in any competent court.

(b) In the event this contract is terminated as provided in paragraph (a) hereof, the Government shall be entitled (i) to pursue the same remedies against the Contractor as it could pursue in the event of a breach of the contract by the Contractor, and (ii) as a penalty in addition to any other damages to which it may be entitled by law, to exemplary damages in an amount (as determined by the Secretary or his duly authorized representative) which shall be not less than three nor more than ten times the costs incurred by the Contractor in providing any such gratuities to any such officer or employee.

(c) The rights and remedies of the Government provided in this clause shall not be exclusive and are in addition to any other rights and remedies provided by law or under this contract. (ASPR 7–104.16)

43. SMALL BUSINESS SUBCONTRACTING PROGRAM (MAINTENANCE, REPAIR AND CONSTRUCTION) (1976 OCT)

(The following clause is applicable if this contract is in excess of $500,000)

(a) The Contractor agrees to establish and conduct a small business subcontracting program which will enable small business concerns to be considered fairly as subcontractors, including suppliers, under this contract. In this connection, the Contractor shall designate an individual to (i) maintain liaison with the Government on small business matters, and (ii) administer the Contractor's Small Business Subcontracting Program.

(b) The Contractor shall submit DD Form 1140–1 each quarter in accordance with the instructions provided on the form, except that where the Contractor submits the report on a corporate basis rather than a plant basis, he may submit his reports to the Department having the responsibility for the Small Business Subcontracting Program at the corporate headquarters. The reporting requirements of this subparagraph (b) do not apply to small business contractors, small business subcontractors, or educational and nonprofit institutions.

(c) The Contractor further agrees (i) to insert the "Utilization of Small Business Concerns" clause in subcontracts which offer substantial subcontracting opportunities, and (ii) to insert in each such subcontract exceeding $500,000 a clause conforming substantially to the language of this clause except that subcontractors shall submit DD Form 1140–1 direct to the Government addressees prescribed on the Form The Contractor will notify the Contracting Officer of the name and address of each subcontractor that will be required to submit a report on DD Form 1140–1. (ASPR 7–602.26(b))

44. RENEGOTIATION (1959 OCT)

(a) To the extent required by law, this contract is subject to the Renegotiation Act of 1951 (50 U.S.C. App. 1211, et seq.), as amended, and to any subsequent act of Congress providing for the renegotation of contracts. Nothing contained in this clause shall impose any renegotiation obligation with respect to this contract or any subcontract hereunder which is not imposed by an act of Congress heretofore or hereafter enacted. Subject to the foregoing this contract shall be deemed to contain all the provisions required by section 104 of the Renegotiation Act of 1951, and by any such other act, without subsequent contract amendment specifically incorporating such provisions.

(b) The Contractor agrees to insert the provisions of this clause, including this paragraph (b), in all subcontracts, as that term is defined in section 103g of the Renegotiation Act of 1951, as amended. (ASPR 7–103.13(a))

45. NOTICE AND ASSISTANCE REGARDING PATENT AND COPYRIGHT INFRINGEMENT (1965 JAN)

(The provisions of this clause shall be applicable only

if the amount of this contract exceeds $10,000.)

(a) The Contractor shall report to the Contracting Officer, promptly and in reasonable written detail, each notice or claim of patent or copyright infringement based on the performance of this contract of which the Contractor has knowledge.

(b) In the event of any claim or suit against the Government on account of any alleged patent or copyright infringement arising out of the performance of this contract or out of the use of any supplies furnished or work or services performed hereunder, the Contractor shall furnish to the Government, when requested by the Contracting Officer, all evidence and information in possession of the Contractor pertaining to such suit or claim. Such evidence and information shall be furnished at the expense of the Government except where the Contractor has agreed to indemnify the Government.

(c) This clause shall be included in all subcontracts. (ASPR 7–103.23)

46. AUTHORIZATION AND CONSENT (1964 MAR)

The Government hereby gives its authorization and consent (without prejudice to any rights of indemnification) for all use and manufacture, in the performance of this contract or any part hereof or any amendment hereto or any subcontract hereunder (including any lower–tier subcontract), of any invention described in and covered by a patent of the United States (i) embodied in the structure or composition of any article the delivery of which is accepted by the Government under this contract, or (ii) utilized in the machinery, tools, or methods the use of which necessarily results from compliance by the Contractor or the using subcontractor with (a) specifications or written provisions now or hereafter forming a part of this contract, or (b) specific written instructions given by the Contracting Officer directing the manner of performance. The entire liability to the Government for infringement of a patent of the United States shall be determined solely by the provisions of the indemnity clauses, if any, included in this contract or any subcontract hereunder (including any lower–tier subcontract), and the Government assumes liability for all other infringement to the extent of the authorization and consent hereinabove granted. (ASPR 7–103.22)

47. COMPOSITION OF CONTRACTOR (1965 JAN)

If the Contractor hereunder is comprised of more than one legal entity, each such entity shall be jointly and severally liable hereunder. (ASPR 7–602.32)

48. SITE INVESTIGATION (1965 JAN)

The Contractor acknowledges that he has investigated and satisfied himself as to the conditions affecting the work, including but not restricted to those bearing upon transportation, disposal, handling and storage of materials, availability of labor, water, electric power, roads and uncertainties of weather, river stages, tides or similar physical conditions at the site, the conformation and conditions of the ground, the character of equipment and facilities needed preliminary to and during prosecution of the work. The Contractor further acknowledges that he has satisfied himself as to the character, quality and quantity of surface and subsurface materials or obstacles to be encountered insofar as this information is reasonably ascertainable from an inspection of the site, including all exploratory work done by the Government, as well as from information presented by the drawings and specifications made a part of this contract. Any failure by the Contractor to acquaint himself with the available information will not relieve him from responsibility for estimating properly the difficulty or cost of successfully performing the work. The Government assumes no responsibility for any conclusions or interpretations made by the Contractor on the basis of the information made available by the Government. (ASPR 7–602.33)

49. PROTECTION OF EXISTING VEGETATION, STRUCTURES, UTILITIES, AND IMPROVEMENTS (1965 JAN)

(a) The Contractor will preserve and protect all existing vegetation such as trees, shrubs, and grass on or adjacent to the site of work which is not to be removed and which does not unreasonably interfere with the construction work. Care will be taken in removing trees authorized for removal to avoid damage to vegetation to remain in place. Any limbs or branches of trees broken during such operations or by the careless operation of equipment, or by workmen, shall be trimmed with a clean cut and painted with an approved tree pruning compound as directed by the Contracting Officer.

(b) The Contractor will protect from damage all existing improvements or utilities at or near the site of the work, the location of which is made known to him, and will repair or restore any damage to such facilities resulting from failure to comply with the requirements of this contract or the failure to exercise reasonable care in the performance of the work. If the Contractor fails or refuses to repair any such damage promptly, the Contracting Officer may have the necessary work performed and charge the cost thereof to the Contractor. (ASPR 7–602.34)

50. OPERATIONS AND STORAGE AREAS (1965 JAN)

(a) All operations of the Contractor (including storage of materials) upon Government premises shall be confined to areas authorized or approved by the Contracting Officer. The Contractor shall hold and save the Government, its officers and agents, free and harmless from liability of any nature occasioned by his operations.

(b) Temporary buildings (storage sheds, shops, offices, etc.) may be erected by the Contractor only with the approval of the Contracting Officer, and shall be built with labor and materials furnished by the Contractor without expense to the Government. Such temporary buildings and utilities shall remain the property of the Contractor and shall be removed by him at his expense upon the completion of the work. With the written consent of the Contracting Officer, such buildings and utilities may be abandoned and need not be removed.

(c) The Contractor shall, under regulations prescribed by the Contracting Officer, use only established roadways or construct and use such temporary roadways as may be authorized by the Contracting Officer. Where materials are transported in the prosecution of the work, vehicles shall not be loaded beyond the loading capacity recommended by the manufacturer of the vehicle or prescribed by any Federal, State or local law or regulation. When it is necessary to cross curbings or sidewalks, protection against damage shall be provided by the Contractor and any damaged roads, curbings, or sidewalks shall be repaired by, or at the expense of the Contractor. (ASPR 7–602.35)

51. MODIFICATION PROPOSALS – PRICE BREAKDOWN (1968 APR)

The Contractor, in connection with any proposal he makes for a contract modification, shall furnish a price breakdown, itemized as required by the Contracting

Officer. Unless otherwise directed, the breakdown shall be in sufficient detail to permit an analysis of all material, labor, equipment, subcontract, and overhead costs, as well as profit, and shall cover all work involved in the modification, whether such work was deleted, added or changed. Any amount claimed for subcontracts shall be supported by a similar price breakdown. In addition, if the proposal includes a time extension, a justification therefor shall also be furnished. The proposal, together with the price breakdown and time extension justification, shall be furnished by the date specified by the Contracting Officer. (ASPR 7–602.36)

52. SUBCONTRACTORS (1972 FEB)

Within seven days after the award of any subcontract either by himself or a subcontractor, the Contractor shall deliver to the Contracting Officer a statement setting forth the name and address of the subcontractor and a summary description of the work subcontracted. The Contractor shall at the same time furnish a statement signed by the subcontractor acknowledging the inclusion in his subcontract of the clauses of this contract entitled "Equal Opportunity," "Davis–Bacon Act," "Contract Work Hours and Safety Standards Act – Overtime Compensation," "Apprentices and Trainees," "Payrolls and Basic Records," "Compliance with Copeland Regulations," "Withholding of Funds," "Subcontracts" and "Contract Termination – Debarment." Nothing contained in this contract shall create any contractual relation between the subcontractor and the Government. (ASPR 7–602.37)

53. CLEANING UP (1965 JAN)

The Contractor shall at all times keep the construction area, including storage areas used by him, free from accumulations of waste material or rubbish and prior to completion of the work remove any rubbish from the premises and all tools, scaffolding, equipment, and materials not the property of the Government. Upon completion of the construction the Contractor shall leave the work and premises in a clean, neat and workmanlike condition satisfactory to the Contracting Officer. (ASPR 7–602.40)

54. ADDITIONAL DEFINITIONS (1965 JAN)

(a) Wherever in the specifications or upon the drawings the words "directed," "required," "ordered," "designated," "prescribed," or words of like import are used, it shall be understood that the "direction," "requirement," "ordered," "designation," or "prescription," of the Contracting Officer is intended and similarly the words "approved," "acceptable," "satisfactory" or words of like import shall mean "approved by" or "acceptable to," or "satisfactory to" the Contracting Officer, unless otherwise expressly stated.

(b) Where "as shown," "as indicated," "as detailed," or words of similar import are used, it shall be understood that the reference is made to the drawings accompanying this contract unless stated otherwise. The word "provided" as used herein shall be understood to mean "provided complete in place," that is "furnished and installed." (ASPR 7–602 4I)

55. ACCIDENT PREVENTION (1977 JUN)

(a) In order to provide safety controls for protection to the life and health of employees and other persons; for prevention of damage to property, materials, supplies, and equipment; and for avoidance of work interruptions in the performance of this contract, the Contractor shall comply with all pertinent provisions of Corps of Engineers Manual, EM 385–1–1, dated 1 June 1977, entitled "General Safety Requirements", as amended, and will also take or cause to be taken such additional measures as the Contracting Officer may determine to be reasonably necessary for the purpose.

(b) The Contractor will maintain an accurate record of, and will report to the Contracting Officer in the manner and on the forms prescribed by the Contracting Officer, exposure data and all accidents resulting in death, traumatic injury, occupational disease, and damage to property, materials, supplies and equipment incident to work performed under this contract.

(c) The Contracting Officer will notify the Contractor of any noncompliance with the foregoing provisions and the action to be taken. The Contractor shall, after receipt of such notice, immediately take corrective action. Such notice, when delivered to the Contractor or his representative at the site of the work, shall be deemed sufficient for the purpose. If the Contractor fails or refuses to comply promptly, the Contracting Officer may issue an order stopping all or part of the work until satisfactory corrective action has been taken. No part of the time lost due to any such stop orders shall be made the subject of claim for extension of time or for excess costs or damages by the Contractor.

(d) Compliance with the provisions of this clause by subcontractors will be the responsibility of the Contractor.

(e) Prior to commencement of the work the Contractor will:

(1) submit in writing his proposals for effectuating this provision for accident prevention;

(2) meet in conference with representatives of the Contracting Officer to discuss and develop mutual understandings relative to administration of the over–all safety program. (ASPR 7–602.42(a) & (b))

56. GOVERNMENT INSPECTORS (1965 JAN)

The work will be conducted under the general direction of the Contracting Officer and is subject to inspection by his appointed inspectors to insure strict compliance with the terms of the contract. No inspector is authorized to change any provision of the specifications without written authorization of the Contracting Officer, nor shall the presence or absence of an inspector relieve the Contractor from any requirements of the contract. (ASPR 7–602.43)

57. RIGHTS IN SHOP DRAWINGS (1966 APR)

(Applicable to all contracts calling for the delivery of shop drawings)

(a) Shop drawings for construction means drawings, submitted to the Government by the Construction Contractor, subcontractor or any lower tier subcontractor pursuant to a construction contract, showing in detail (i) the proposed fabrication and assembly of structural elements and (ii) the installation (i.e., form, fit, and attachment details) of materials or equipment. The Government may duplicate, use, and disclose in any manner and for any purpose shop drawings delivered under this contract.

(b) This clause, including this paragraph (b), shall be included in all subcontracts hereunder at any tier. (ASPR 7–602.47)

58. MINORITY BUSINESS ENTERPRISES SUBCONTRACTING PROGRAM (1971 NOV)

(The following clause is applicable if this contract is in excess of $500,000)

(a) The Contractor agrees to establish and conduct

a program which will enable minority business enterprises (as defined in the clause, entitled, "Utilization of Minority Business Enterprises") to be considered fairly as subcontractors and suppliers under this contract. In this connection, the Contractor shall:

(1) Designate a liaison officer who will administer the Contractor's "Minority Business Enterprises Program."

(2) Provide adequate and timely consideration of the potentialities of known minority business enterprises in all "make-or-buy" decisions.

(3) Assure that known minority business enterprises will have an equitable opportunity to compete for subcontracts, particularly by arranging solicitations, time for the preparation of bids, quantities, specifications, and delivery schedules so as to facilitate the participation of minority business enterprises.

(4) Maintain records showing (i) procedures which have been adopted to comply with the policies set forth in this clause, including the establishment of a source list of minority business enterprises, (ii) awards to minority business enterprises on the source list, and (iii) specific efforts to identify and award contracts to minority business enterprises.

(5) Include the "Utilization of Minority Business Enterprises" clause in subcontracts which offer substantial minority business enterprise subcontracting opportunities.

(6) Cooperate with the Contracting Officer in any studies and surveys of the Contractor's minority business enterprises procedures and practices that the Contracting Officer may from time to time conduct.

(7) Submit periodic reports of subcontracting to known minority business enterprises with respect to the records referred to in subparagraph (4) above, in such form and manner and at such time (not more often than quarterly) as the Contracting Officer may prescribe.

(b) The Contractor further agrees to insert, in any subcontract hereunder which may exceed $500,000 provisions which shall conform substantially to the language of this clause, including this paragraph (b), and to notify the Contracting Officer of the names of such subcontractors. (ASPR 7-104.36(b))

CONTINUED ON NEXT PAGE

CONTINUED ON NEXT PAGE

59. AFFIRMATIVE ACTION FOR DISABLED VETERANS AND VETERANS OF THE VIETNAM ERA (1976 JUL)

(This clause is applicable pursuant to 41 C.F.R. 60–250, if this contract is for $10,000 or more.)

(a) The contractor will not discriminate against any employee or applicant for employment because he or she is a disabled veteran or veteran of the Vietnam era in regard to any position for which the employee or applicant for employment is qualified. The contractor agrees to take affirmative action to employ, advance in employment and otherwise treat qualified disabled veterans and veterans of the Vietnam era without discrimination based upon their disability or veterans status in all employment practices such as the following: employment upgrading, demotion or transfer, recruitment, advertising, layoff or termination, rates of pay or other forms of compensation, and selection for training, including apprenticeship.

(b) The contractor agrees that all suitable employment openings of the contractor which exist at the time of the execution of this contract and those which occur during the performance of this contract, including those not generated by this contract and including those occurring at an establishment of the contractor other than the one wherein the contract is being performed but excluding those of independently operated corporate affiliates, shall be listed at an appropriate local office of the State employment service system wherein the opening occurs. The contractor further agrees to provide such reports to such local office regarding employment openings and hires as may be required.

State and local government agencies holding Federal contracts of $10,000 or more shall also list all their suitable openings with the appropriate office of the State employment service, but are not required to provide those reports set forth in paragraphs (d) and (e).

(c) Listing of employment openings with the employment service system pursuant to this clause shall be made at least concurrently with the use of any other recruitment source or effort and shall involve the normal obligations which attach to the placing of a bona fide job order, including the acceptance of referrals of veterans and nonveterans. The listing of employment openings does not require the hiring of any particular job applicant or from any particular group of job applicants, and nothing herein is intended to relieve the contractor from any requirements in Executive Orders or regulations regarding nondiscrimination in employment.

(d) The reports required by paragraph (b) of this clause shall include, but not be limited to, periodic reports which shall be filed at least quarterly with the appropriate local office or, where the contractor has more than one hiring location in a State, with the central office of that State employment service. Such reports shall indicate for each hiring location (1) the number of individuals hired during the reporting period, (2) the number of nondisabled veterans of the Vietnam era hired, (3) the number of disabled veterans of the Vietnam era hired, and (4) the total number of disabled veterans hired. The reports should include covered veterans hired for on–the–job training under 38 USC 1787. The contractor shall submit a report within 30 days after the end of each reporting period wherein any performance is made on this contract identifying data for each hiring location. The contractor shall maintain at each hiring location copies of the reports submitted until the expiration of one year after final payment under the contract, during which time these reports and related documentation shall be made available, upon request, for examination by any authorized representatives of the contracting officer or of the Secretary of Labor. Documentation would include personnel records respecting job openings, recruitment and placement.

(e) Whenever the contractor becomes contractually bound to the listing provisions of this clause, it shall advise the employment service system in each State where it has establishments of the name and location of each hiring location in the State. As long as the contractor is contractually bound to these provisions and has so advised the State system, there is no need to advise the State system of subsequent contracts. The contractor may advise the State system when it is no longer bound by this contract clause.

(f) This clause does not apply to the listing of employment openings which occur and are filled outside of the 50 States, the District of Columbia, Puerto Rico, Guam, and the Virgin Islands.

(g) The provisions of paragraphs (b), (c), (d) and (e) of this clause do not apply to openings which the contractor proposes to fill from within his own organization or to fill pursuant to a customary and traditional employer–union hiring arrangement. This exclusion does not apply to a particular opening once an employer decides to consider applicants outside of his own organization or employer–union arrangement for that opening.

(h) As used in this clause: (1) "All suitable employment openings" includes, but is not limited to, openings which occur in the following job categories: production and nonproduction; plant and office; laborers and mechanics; supervisory and nonsupervisory; technical; and executive, administrative, and professional openings as are compensated on a salary basis of less than $25,000 per year. This term includes full–time employment, temporary employment of more than 3 days' duration, and part–time employment. It does not include openings which the contractor proposes to fill from within his own organization or to fill pursuant to a customary and traditional employer–union hiring arrangement nor openings in an educational institution which are restricted to students of that institution. Under the most compelling circumstances an employment opening may not be suitable for listing, including such situations where the needs of the Government cannot reasonably be otherwise supplied, where listing would be contrary to national security, or where the requirement of listing would otherwise not be for the best interest of the Government.

(2) "Appropriate office of the State employment service system" means the local office of the Federal–State national system of public employment offices with assigned responsibility for serving the area where the employment opening is to be filled, including the District of Columbia, Guam, Puerto Rico, and the Virgin Islands.

(3) "Openings which the contractor proposes to

fill from within his own organization" means employment openings for which no consideration will be given to persons outside the contractor's organization (including any affiliates, subsidiaries, and the parent companies) and includes any openings which the contractor proposes to fill from regularly established "recall" lists.

(4) "Openings which the contractor proposes to fill pursuant to a customary and traditional employer–union hiring arrangement" means employment openings which the contractor proposes to fill from union halls, which is part of the customary and traditional hiring relationship which exists between the contractor and representatives of his employees.

(i) The contractor agrees to comply with the rules, regulations, and relevant orders of the Secretary of Labor issued pursuant to the Vietnam Veterans Readjustment Act, hereinafter referred to as the "Act" (38 U.S.C. 2012).

(j) In the event of the contractor's noncompliance with the requirements of this clause, actions for noncompliance may be taken in accordance with the rules, regulations, and relevant orders of the Secretary of Labor issued pursuant to the Act.

(k) The contractor agrees to post in conspicuous places, available to employees and applicants for employment, notices in a form to be prescribed by the Director, Office of Federal Contract Compliance Programs, provided by or through the contracting officer. Such notice shall state the contractor's obligation under the law to take affirmative action to employ and advance in employment qualified disabled veterans and veterans of the Vietnam era for employment, and the rights of applicants and employees.

(l) The contractor will notify each labor union or representative of workers with which it has a collective bargaining agreement or other contract understanding, that the contractor is bound by the terms of the Vietnam Era Veterans Readjustment Assistance Act, and is committed to take affirmative action to employ and advance in employment qualified disabled veterans and veterans of the Vietnam Era.

(m) The contractor will include the provisions of this clause in every subcontract or purchase order of $10,000 or more unless exempted by rules, regulations, or orders of the Secretary issued pursuant to the Act, so that such provisions will be binding upon each subcontractor or vendor. The contractor will take such action with respect to any subcontract or purchase order as the Director of the Office of Federal Contract Compliance Programs may direct to enforce such provisions, including action for noncompliance. (ASPR 7–103.27)

60. VALUE ENGINEERING INCENTIVE (1977 AUG)

(The following clause is applicable if this contract is in excess of $100,000)

(a) Application. This clause applies to a Contractor developed and documented Value Engineering Change Proposal (VECP) which:

(i) requires a change to this contract to implement the VECP; and

(ii) reduces the contract price without impairing essential function or characteristics, provided that it is not based solely on a change in deliverable end item quantities.

(b) Documentation. As a minimum, the following information shall be submitted by the contractor with each VECP:

(i) a description of the difference between the existing contract requirement and the proposed change, and the comparative advantages and disadvantages of each; justification where function or characteristics of a work item is being altered; and the effect of the change on the performance of the end item;

(ii) an analysis and itemization of the requirements of the contract which must be changed if the VECP is accepted and a recommendation as to how to make each such change (e.g., a suggested specification revision);

(iii) a separate detailed cost estimate for both the existing contract requirement and the proposed change to provide an estimate of the reduction in costs, if any, that will result from acceptance of the VECP, taking into account the costs of development and implementation by the Contractor (including any amount attributable to subcontracts in accordance with paragraph (f) below);

(iv) a prediction of any effects the proposed change would have on related costs to the Military Department such as Government furnished property costs, and costs of maintenance and operation;

(v) a statement of the time by which a change order adopting the VECP must be issued so as to obtain the maximum cost reduction during the remainder of this contract, noting any effect on the contract completion time or delivery schedule; and

(vi) identification of any previous submission of the VECP, including the dates submitted, the agencies involved, the numbers of the Government contracts involved, and the previous actions by the Government, if known.

(c) Submission. To expedite a determination, VECPs shall be submitted to the Resident Engineer at the worksite with a copy to the Contracting Officer. Proposals shall be processed expeditiously; however, the Government shall not be liable for any delay in acting upon any proposal submitted pursuant to this clause. If the evaluation period is likely to exceed 45 calendar days, the PCO shall promptly notify the Contractor of the estimated decision date and provide the reasons for the additional time required. The Contractor has the right to withdraw, in whole or in part, any VECP not accepted by the Government within the period specified in the VECP.

(d) Acceptance. The Contracting Officer may accept, in whole or in part, by contract modification any VECP submitted pursuant to this clause. The Contracting Officer may accept the VECP even though an agreement on price reduction has not been reached, by issuing the Contractor a notice to proceed with the change. Until a notice to proceed is issued or a contract modification applies a VECP to this contract, the Contractor shall remain obligated to perform in accordance with this contract. Contract modifications made pursuant to this clause will so state. The decision of the Contracting Officer as to the acceptance of any VECP under this contract shall be final and shall not be subject to the "Disputes" clause of this contract.

(e) Sharing. If a VECP submitted by the Contractor pursuant to this clause is accepted, the contract price shall be adjusted without regard to profit in accordance with the following provisions:

(i) Definition:

(A) Instant contract savings to the Contractor (ICS) are the estimated reduction in the Contractor's cost

of performance resulting from the acceptance of the VECP. The proposed cost reduction includes estimated allowable Contractor development and implementation costs (CC). The Contractor's development and implementation costs include any subcontractor development and implementation costs (see (f) below). For purposes of this clause, Contractor development costs are those costs incurred after the Contractor has identified a specific VE project and prior to acceptance and implementation by the Government.

(B) Government Costs (GC) are those DOD costs which directly result from development and implementation of the VECP, such as test and evaluation of the VECP.

(ii) Calculations and Actions.
Multiply ICS by 45% and GC by 55%. Add these two results, e.g., (.45 ICS + .55 GC) and subtract from the contract price.

(f) Subcontracts. The Contractor shall include appropriate VE arrangements in any subcontract of $50,000 or greater, and may include such arrangements in contracts of lesser value. To compute any adjustment in the contract price under paragraph (e) above, the Contractor's cost of development and implementation of a VECP which is accepted under this contract shall include any development and implementation costs of a subcontractor which clearly pertains to such VECP, but shall exclude any VE incentive payments which the Contractor may make to a subcontractor. The Contractor may make whatever VE incentive payment arrangements he chooses with his subcontractors, *provided* that any payments to subcontractors under such arrangements are made from the Contractor's, and not the Government's, share of the savings resulting from the VECP.

(g) Data. The Contractor may restrict the Government's right to use any sheet of a VECP or of the supporting data, submitted pursuant to this clause, in accordance with the terms of the following legend if it is marked on such sheet:

> "This data furnished pursuant to the Value Engineering Incentive clause of contract _____ shall not be disclosed outside the Government, or duplicated, used, or disclosed, in whole or in part, for any purpose other than to evaluate a VECP submitted under said clause. This restriction does not limit the Government's right to use information contained in this data if it is or has been obtained, or is otherwise available, from the Contractor or from another source, without limitations."

In the event of acceptance of a VECP, the Contractor hereby grants to the Government unlimited rights, as defined in the clause of ASPR 7–104.9(a), in the VECP and supporting data, except that, with respect to data which qualifies as and is submitted as limited rights technical data in accordance with the clause of ASPR 7–104.9(a), the Government shall have the rights specified in the contract modification referred to in paragraph (d) hereof and the data shall be appropriately marked. (ASPR 7–602.50)

61. AFFIRMATIVE ACTION FOR HANDICAPPED WORKERS (1976 MAY)

(a) The contractor will not discriminate against any employee or applicant for employment because of physical or mental handicap in regard to any position for which the employee or applicant for employment is qualified. The contractor agrees to take affirmative action to employ, advance in employment and otherwise treat qualified handicapped individuals without discrimination based upon their physical or mental handicap in all employment practices such as the following: employment, upgrading, demotion or transfer, recruitment, advertising, layoff or termination, rates of pay or other forms of compensation, and selection for training, including apprenticeship.

(b) The contractor agrees to comply with the rules, regulations, and relevant orders of the Secretary of Labor issued pursuant to the Act.

(c) In the event of the contractor's noncompliance with the requirements of this clause, action for noncompliance may be taken in accordance with the rules, regulations and relevant orders of the Secretary of Labor issued pursuant to the Act.

(d) The contractor agrees to post in conspicuous places, available to employees and applicants for employment, notices in a form to be prescribed by the Director, provided by or through the contracting officer. Such notices shall state the contractor's obligation under the law to take affirmative action to employ and advance in employment qualified handicapped employees and applicants for employment, and the rights of applicants and employees.

(e) The contractor will notify each labor union or representative of workers with which it has a collective bargaining agreement or other contract understanding, that the contractor is bound by the terms of section 503 of the Rehabilitation Act of 1973, and is committed to take affirmative action to employ and advance in employment physically and mentally handicapped individuals.

(f) The contractor will include the provisions of this clause in every subcontract or purchase order of $2,500 or more unless exempted by rules, regulations, or orders of the Secretary issued pursuant to section 503 of the Act, so that such provisions will be binding upon each subcontractor or vendor. The contractor will take such action with respect to any subcontract or purchase order as the Director of the Office of Federal Contract Compliance Programs may direct to enforce such provisions, including action for noncompliance. (ASPR 7–103.28)

62. CLEAN AIR AND WATER (1975 OCT)

(Applicable only if the contract exceeds $100,000, or the contracting officer has determined that orders under an indefinite quantity contract in any one year will exceed $100,000, or a facility to be used has been the subject of a conviction under the Clean Air Act (42 U.S.C. 1857c–8(c)(1)) or the Federal Water Pollution Control Act (33 U.S.C. 1319(c)) and is listed by EPA, or the contract is not otherwise exempt.)

(a) The Contractor agrees as follows:

(i) To comply with all the requirements of section 114 of the Clean Air Act, as amended (42 U.S.C. 1857, et seq., as amended by Public Law 91–604) and section 308 of the Federal Water Pollution Control Act (33 U.S.C. 1251, as amended by Public Law 92–500), respectively, relating to inspection, monitoring, entry, reports, and information, as well as other requirements specified in section 114 and section 308 of the Air Act and the Water Act, respectively, and all regulations and guidelines issued thereunder before the award of this contract;

(ii) That no portion of the work required by this prime contract will be performed in a facility listed on the Environmental Protection Agency List of Violating Facilities on the date this contract was awarded unless and until the EPA eliminates the name of such facility or facilities from such listing;

(iii) To use his best efforts to comply with clean air standards and clean water standards at the facilities in which the contract is being performed; and

(iv) To insert the substance of the provisions of this clause in any nonexempt subcontract, including this paragraph (iv).

(b) The terms used in this clause have the following meanings.

(i) The term *"Air Act"* means the Clean Air Act, as amended (42 U.S.C. 1857 et seq., as amended by Public Law 91–604).

(ii) The term *"Water Act"* means Federal Water Pollution Control Act, as amended (33 U.S.C. 1251 et seq., as amended by Public Law 92–500).

(iii) The term *"clean air standards"* means any enforceable rules, regulations, guidelines, standards, limitations, orders, controls, prohibitions, or other requirements which are contained in, issued under, or otherwise adopted pursuant to the Air Act or Executive Order 11738, an applicable implementation plan as described in section 110(d) of the Clean Air Act (42 U.S.C. 1857c–5(d), an approved implementation procedure or plan under section 111(c) or section 111(d), respectively, of the Air Act (42 U.S.C. 1857c–6(c) or (d)), or an approved implementation procedure under section 112(d) of the Air Act (42 U.S.C. 1857c–7(d)).

(iv) The term *"clean water standards"* means any enforceable limitation, control, condition, prohibition, standard or other requirement which is promulgated pursuant to the Water Act or contained in a permit issued to a discharger by the Environmental Protection Agency or by a State under an approved program, as authorized by section 402 of the Water Act (33 U.S.C. 1342), or by a local government to ensure compliance with pretreatment regulations as required by section 307 of the Water Act (33 U.S.C. 1317).

(v) The term *"compliance"* means compliance with clean air or water standards. Compliance shall also mean compliance with a schedule or plan ordered or approved by a court of competent jurisdiction, the Environmental Protection Agency or an air or water pollution control agency in accordance with the requirement of the Air Act or Water Act and regulations issued pursuant thereto.

(vi) The term *"facility"* means any building, plant, installation, structure, mine, vessel or other floating craft, location, or site of operations, owned, leased, or supervised by a contractor, subcontractor, to be utilized in the performance of a contract or subcontract. Where a location or site of operations contains or includes more than one building, plant, installation, or structure, the entire location or site shall be deemed to be a facility except where the Director, Office of Federal Activities, Environmental Protection Agency, determines that independent facilities are colocated in one geographical area.

(vii) The term *"nonexempt contract or subcontract"* means a contract or subcontract of more than $100,000 which is not otherwise exempted pursuant to the EPA regulations implementing the Air Act and Water Act (40 CFR 15.5), as further implemented in ASPR 1–2302.4 or in FPR 1–1.2302–4 (whichever is applicable) and the procedures of the Department awarding the contract. (ASPR 7–103.29)

63. NOTICE TO THE GOVERNMENT OF LABOR DISPUTES (1958 SEP)

(a) Whenever the Contractor has knowledge that any actual or potential labor dispute is delaying or threatens to delay the timely performance of this contract, the Contractor shall immediately give notice thereof, including all relevant information with respect thereto, to the Contracting Oficer.

(b) The Contractor agrees to insert the substance of this clause, including this paragraph (b), in any subcontract hereunder as to which a labor dispute may delay the timely performance of this contract; except that each such subcontract shall provide that in the event its timely performance is delayed or threatened by delay by any actual or potential labor dispute, the subcontractor shall immediately notify his next higher tier subcontractor, or the prime contractor, as the case may be, of all relevant information with respect to such dispute. (ASPR 7–104.4)

64. CONTRACT PRICES – BIDDING SCHEDULE (1968 APR)

(The following clause is applicable to contracts containing unit prices)

Payment for the various items listed in the Bidding Schedule shall constitute full compensation for furnishing all plant, labor, equipment, appliances, and materials, and for performing all operations required to complete the work in conformity with the drawings and specifications. All costs for work not specifically mentioned in the Bidding Schedule shall be included in the contract prices for the items listed. (ASPR 7–603.5)

65. PRIORITIES, ALLOCATIONS, AND ALLOTMENTS (1975 OCT)

(The following clause is applicable to rateable contracts)

The Contractor shall follow the provisions of DMS Reg. 1 or DPS Reg. 1 and all other applicable regulations and orders of the Bureau of Domestic Commerce in obtaining controlled materials and other products and materials needed to fill this order. (ASPR 7–104.18)

66. PRICE REDUCTION FOR DEFECTIVE COST OR PRICING DATA – PRICE ADJUSTMENT (1970 JAN)

(The following clause is applicable if this contract is in excess of $100,000)

(a) This clause shall become operative only with respect to any modification of this contract which involves aggregate increases and/or decreases in costs plus applicable profits in excess of $100,000 unless the modification is priced on the basis of adequate competition, established catalog or market prices of commercial items sold in substantial quantities to the general public, or prices set by law or regulation. The right to price reduction under this clause is limited to defects in data relating to such modification.

(b) If any price, including profit, or fee, negotiated

in connection with any price adjustment under this contract was increased by any significant sums because:

(i) the Contractor furnished cost or pricing data which was not complete, accurate and current as certified in the Contractor's Certificate of Current Cost or Pricing Data;

(ii) a subcontractor, pursuant to the clause of this contract entitled "Subcontractor Cost or Pricing Data" or "Subcontractor Cost or Pricing Data – Price Adjustments" or any subcontract clause therein required, furnished cost or pricing data which was not complete, accurate and current as certified in the subcontractor's Certificate of Current Cost or Pricing Data;

(iii) a subcontractor or prospective subcontractor furnished cost or pricing data which was required to be complete, accurate and current and to be submitted to support a subcontract cost estimate furnished by the Contractor but which was not complete, accurate and current as of the date certified in the Contractor's Certificate of Current Cost or Pricing Data; or

(iv) the Contractor or a subcontractor or prospective subcontractor furnished any data, not within (i), (ii) or (iii) above, which was not accurate, as submitted;

the price shall be reduced accordingly and the contract shall be modified in writing as may be necessary to reflect such reduction. However, any reduction in the contract price due to defective subcontract data of a prospective subcontractor, when the subcontract was not subsequently awarded to such subcontractor, will be limited to the amount (plus applicable overhead and profit markup) by which the actual subcontract, or actual cost to the Contractor if there was no subcontract, was less than the prospective subcontract cost estimate submitted by the Contractor, *provided* the actual subcontract price was not affected by defective cost or pricing data.

Note: Since the contract is subject to reduction under this clause by reason of defective cost or pricing data submitted in connection with certain subcontracts, it is expected that the contractor may wish to include a clause in each such subcontract requiring the subcontractor to appropriately indemnify the contractor. However, the inclusion of such a clause and the terms thereof are matters for negotiation and agreement between the contractor and the subcontractor, *provided* that they are consistent with ASPR 23–203 relating to Disputes provisions in subcontracts. It is also expected that any subcontractor subject to such indemnification will generally require substantially similar indemnification for defective cost or pricing data required to be submitted by his lower tier subcontractors. (ASPR 7–104.29(b))

67. INTEREST (1972 MAY)

Notwithstanding any other provision of this contract, unless paid within thirty (30) days, all amounts that become payable by the Contractor to the Government under this contract (net of any applicable tax credit under the Internal Revenue Code) shall bear interest from the date due until paid and shall be subject to adjustments as provided by Part 6 of Appendix E of the Armed Services Procurement Regulation, as in effect on the date of this contract. The interest rate per annum shall be the interest rate in effect which has been established by the Secretary of the Treasury pursuant to Public Law 92–41; 85 STAT 97 for the Renegotiation Board, as of the date the amount becomes due as herein provided. Amounts shall be due upon the earliest one of (i) the date fixed pursuant to this contract; (ii) the date of the first written demand for payment, consistent with this contract, including demand consequent upon default termination; (iii) the date of transmittal by the Government to the Contractor of a proposed supplemental agreement to confirm completed negotiations fixing the amount; or (iv) if this contract provides for revision of prices, the date of written notice to the Contractor stating the amount of refund payable in connection with a pricing proposal or in connection with a negotiated pricing agreement not confirmed by contract supplement. (ASPR 7–104.39)

68. AUDIT BY DEPARTMENT OF DEFENSE (1975 JUN)

(The following clause is applicable unless this contract was entered into by formal advertising and is not in excess of $100,000)

(a) *General.* The Contracting Officer or his representatives shall have the audit and inspection rights described in the applicable paragraphs (b), (c) and (d) below.

(b) *Examination of Costs.* If this is a cost reimbursement type, incentive, time and materials, labor hour, or price redeterminable contract, or any combination thereof, the Contractor shall maintain, and the Contracting Officer or his representatives shall have the right to examine books, records, documents, and other evidence and accounting procedures and practices, sufficient to reflect properly all direct and indirect costs of whatever nature claimed to have been incurred and anticipated to be incurred for the performance of this contract. Such right of examination shall include inspection at all reasonable times of the Contractor's plants, or such parts thereof, as may be engaged in the performance of this contract.

(c) *Cost or Pricing Data.* If the Contractor submitted cost or pricing data in connection with the pricing of this contract or any change or modification thereto, unless such pricing was based on adequate price competition, established catalog or market prices of commercial items sold in substantial quantities to the general public, or prices set by law or regulation, the Contracting Officer or his representatives who are employees of the United States Government shall have the right to examine all books, records, documents and other data of the Contractor related to the negotiation, pricing or performance of such contract, change or modification, for the purpose of evaluating the accuracy, completeness and currency of the cost or pricing data submitted. Additionally, in the case of pricing any change or modification exceeding $100,000 to formally advertised contracts, the Comptroller General of the United States or his representatives who are employees of the United States Government shall have such rights. The right of examination shall extend to all documents necessary to permit adequate evaluation of the cost or pricing data submitted, along with the computations and projections used therein.

(d) *Reports.* If the Contractor is required to furnish Cost Information Reports (CIR) or Contract Fund Status Reports (CFSR), the Contracting Officer or his representatives shall have the right to examine books, records, documents, and supporting materials, for the purpose of evaluating (i) the effectiveness of the Contractor's policies and procedures to produce data compatible with the objectives of these reports, and (ii) the data reported.

(e) *Availability.* The materials described in (b), (c) and (d) above shall be made available at the office of the Contractor, at all reasonable times, for inspection, audit, or reproduction, until the expiration of three years

from the date of final payment under this contract or such lesser time specified in Appendix M of the Armed Services Procurement Regulation, and for such longer period, if any, as is required by applicable statute, or by other clauses of this contract, or by (1) and (2) below:

(1) If this contract is completely or partially terminated, the records relating to the work terminated shall be made available for a period of three years from the date of any resulting final settlement.

(2) Records which relate to appeals under the "Disputes" clause of this contract, or litigation or the settlement of claims arising out of the performance of this contract, shall be made available until such appeals, litigation, or claims have been disposed of.

(f) The Contractor shall insert a clause containing all the provisions of this clause, including this paragraph (f), in all subcontracts exceeding $10,000 hereunder, except altered as necessary for proper identification of the contracting parties and the Contracting Officer under the Government prime contract. (ASPR 7–104.41(a))

69. SUBCONTRACTOR COST OR PRICING DATA – PRICE ADJUSTMENTS (1970 JAN)

(The following clause is applicable if this contract is in excess of $100,000)

(a) Paragraphs (b) and (c) of this clause shall become operative only with respect to any modification made pursuant to one or more provisions of this contract which involves aggregate increases and/or decreases in costs plus applicable profits expected to exceed $100,000. The requirements of this clause shall be limited to such modifications.

(b) The Contractor shall require subcontractors hereunder to submit cost or pricing data under the following circumstances: (i) prior to the award of any subcontract the amount of which is expected to exceed $100,000 when entered into; (ii) prior to the pricing of any subcontract modification which involves aggregate increases and/or decreases in costs plus applicable profits expected to exceed $100,000; except where the price is based on adequate price competition, established catalog or market prices of commercial items sold in substantial quantities to the general public, or prices set by law or regulation.

(c) The Contractor shall require subcontractors to certify that to the best of their knowledge and belief the cost and pricing data submitted under (b) above is accurate, complete, and current as of the date of agreement on the negotiated price of the subcontract or subcontract change or modification.

(d) The Contractor shall insert the substance of this clause including this paragraph (d) in each subcontract which exceeds $100,000. (ASPR 7–104.42(b))

70.1 GOVERNMENT–FURNISHED PROPERTY (SHORT FORM) (1964 NOV)

(The following clause is applicable when Government Property having an acquisition cost of $25,000 or less is furnished to or acquired by the Contractor)

(a) The Government shall deliver to the Contractor, for use only in connection with this contract, the property described in the schedule or specifications (hereinafter referred to as "Government–furnished property"), at the times and locations stated therein. If the Government–furnished property, suitable for its intended use, is not so delivered to the Contractor, the Contracting Officer shall, upon timely written request made by the Contractor, and if the facts warrant such action, equitably adjust any affected provision of this contract pursuant to the procedures of the "Changes" clause hereof.

(b) Title to Government–furnished property shall remain in the Government. The Contractor shall maintain adequate property control records of Government–furnished property in accordance with sound industrial practice.

(c) Unless otherwise provided in this contract, the Contractor, upon delivery to him of any Government–furnished property, assumes the risk of, and shall be responsible for, any loss thereof or damage thereto except for reasonable wear and tear, and except to the extent that such property is consumed in the performance of this contract.

(d) The Contractor shall, upon completion of this contract, prepare for shipment, deliver f.o.b. origin, or dispose of all Government–furnished property not consumed in the performance of this contract or not theretofore delivered to the Government, as may be directed or authorized by the Contracting Officer. The net proceeds of any such disposal shall be credited to the contract price or paid in such other manner as the Contracting Officer may direct. (ASPR 7–104.24(f))

70.2 GOVERNMENT PROPERTY (FIXED PRICE) (1968 SEP)

(The following clause is applicable when Government Property having an acquisition cost in excess of $25,000 is furnished to or acquired by the Contractor)

(a) *Government–Furnished Property.* The Government shall deliver to the Contractor, for use in connection with and under the terms of this contract, the property described as Government–furnished property in the Schedule or specifications, together with such related data and information as the Contractor may request and as may reasonably be required for the intended use of such property (hereinafter referred to as "Government–furnished property"). The delivery or performance dates for the supplies or services to be furnished by the Contractor under this contract are based upon the expectation that Government–furnished property suitable for use (except for such property furnished "as is") will be delivered to the Contractor at the times stated in the Schedule or, if not so stated, in sufficient time to enable the Contractor to meet such delivery or performance dates. In the event that Government–furnished property is not delivered to the Contractor by such time or times, the Contracting Officer shall, upon timely written request made by the Contractor, make a determination of the delay, if any, occasioned the Contractor thereby, and shall equitably adjust the delivery or performance dates or the contract price, or both, and any other contractual provision affected by any such delay, in accordance with the procedures provided for in the clause of this contract entitled "Changes." Except for Government–furnished property furnished "as is," in the event the Government–furnished property is received by the Contractor in a condition not suitable for the intended use the Contractor shall, upon receipt thereof, notify the Contracting Officer of such fact and, as directed by the Contracting Officer, either (i) return such property at the Government's expense or otherwise dispose of the property, or (ii) effect repairs or modifications. Upon the completion of (i) or (ii) above, the Contracting Officer upon written request of the Contractor shall equitably adjust the delivery or performance dates or the contract price, or both, and any other contractual provision affected by the rejection or disposition, or the repair or modification, in accordance with the procedures provided for in the clause of this contract entitled "Changes." The foregoing provisions for adjustment are exclusive and the Government shall not be liable to suit for breach of contract by reason of any delay in delivery of Government–furnished property or delivery of such property in a condition not suitable for its

intended use.

(b) *Changes in Government-furnished Property.*

(1) By notice in writing, the Contracting Officer may (i) decrease the property provided or to be provided by the Government under this contract, or (ii) substitute other Government-owned property for property to be provided by the Government, or to be acquired by the Contractor for the Government, under this contract. The Contractor shall promptly take such action as the Contracting Officer may direct with respect to the removal and shipping of property covered by such notice.

(2) In the event of any decrease in or substitution of property pursuant to subparagraph (1) above, or any withdrawal of authority to use property provided under any other contract or lease, which property the Government had agreed in the Schedule to make available for the performance of this contract, the Contracting Officer, upon the written request of the Contractor (or, if the substitution of property causes a decrease in the cost of performance, on his own initiative), shall equitably adjust such contractual provisions as may be affected by the decrease, substitution, or withdrawal, in accordance with the procedures provided for in the "Changes" clause of this contract.

(c) *Title.* Title to all property furnished by the Government shall remain in the Government. In order to define the obligations of the parties under this clause, title to each item of facilities, special test equipment, and special tooling (other than that subject to a "Special Tooling" clause) acquired by the Contractor for the Government pursuant to this contract shall pass to and vest in the Government when its use in the performance of this contract commences, or upon payment therefor by the Government, whichever is earlier, whether or not title previously vested. All Government-furnished property, together with all property acquired by the Contractor title to which vests in the Government under this paragraph, is subject to the provisions of this clause and is hereinafter collectively referred to as "Government property." Title to Government property shall not be affected by the incorporation or attachment thereof to any property not owned by the Government, nor shall such Government property, or any part thereof, be or become a fixture or lose its identity as personalty by reason of affixation to any realty.

(d) *Property Administration.* The Contractor shall comply with the provisions of Appendix B, Armed Services Procurement Regulation, as in effect on the date of the contract, which is hereby incorporated by reference and made a part of this contract. Material to be furnished by the Government shall be ordered or returned by the Contractor, when required, in accordance with the "Manual for Military Standard Requisitioning and Issue Procedure (MILSTRIP) for Defense Contractors" (Appendix H, Armed Services Procurement Regulation) as in effect on the date of this contract, which Manual is hereby incorporated by reference and made a part of this contract.

(e) *Use of Government Property.* The Government property shall, unless otherwise provided herein or approved by the Contracting Officer, be used only for the performance of this contract.

(f) *Utilization, Maintenance and Repair of Government Property.* The Contractor shall maintain and administer, in accordance with sound industrial practice, and in accordance with applicable provisions of Appendix B, a program for the utilization, maintenance, repair, protection, and preservation of Government property until disposed of by the Contractor in accordance with this clause. In the event that any damage occurs to Government property the risk of which has been assumed by the Government under this contract, the Government shall replace such items or the Contractor shall make such repair of the property as the Government directs; *provided,* however, that if the Contractor cannot effect such repair within the time required, the Contractor shall dispose of such property in the manner directed by the Contracting Officer. The contract price includes no compensation to the Contractor for the performance of any repair or replacement for which the Government is responsible, and an equitable adjustment will be made in any contractual provisions affected by such repair or replacement of Government property made at the direction of the Government, in accordance with the procedures provided for in the "Changes" clause of this contract. Any repair or replacement for which the Contractor is responsible under the provisions of this contract shall be accomplished by the Contractor at his own expense.

(g) *Risk of Loss.* Unless otherwise provided in this contract, the Contractor assumes the risk of, and shall be responsible for, any loss of or damage to Government property provided under this contract upon its delivery to him or upon passage of title thereto to the Government as provided in paragraph (c) hereof, except for reasonable wear and tear and except to the extent that such property is consumed in the performance of this contract.

(h) *Access.* The Government, and any persons designated by it, shall at all reasonable times have access to the premises wherein any Government property is located, for the purpose of inspecting the Government property.

(i) *Final Accounting and Disposition of Government Property.* Upon the completion of this contract, or at such earlier dates as may be fixed by the Contracting Officer, the Contractor shall submit, in a form acceptable to the Contracting Officer, inventory schedules covering all items of Government property not consumed in the performance of this contract (including any resulting scrap) or not theretofore delivered to the Government, and shall prepare for shipment, deliver f.o.b. origin, or dispose of the Government property, as may be directed or authorized by the Contracting Officer. The net proceeds of any such disposal shall be credited to the contract price or shall be paid in such other manner as the Contracting Officer may direct.

(j) *Restoration of Contractor's Premises and Abandonment.* Unless otherwise provided herein, the Government:

(i) may abandon any Government property in place, and thereupon all obligations of the Government regarding such abandoned property shall cease; and

(ii) has no obligation to the Contractor with regard to restoration or rehabilitation of the Contractor's premises, neither in case of abandonment (paragraph (j)(i) above), disposition on completion of need or of the contract (paragraph (i) above), nor otherwise, except for restoration or rehabilitation costs which are properly included in an equitable adjustment under paragraph (b) above.

(k) *Communications.* All communications issued pursuant to this clause shall be in writing or in accordance with the "Manual for Military Standard Requisitioning and Issue Procedure (MILSTRIP) for Defense Contractors" (Appendix H, Armed Services Procurement Regulation). (ASPR 7–104.24(a))

71. VARIATIONS IN ESTIMATED QUANTITIES (1968 APR)

(The following clause is not applicable to bid items listed in the "Variations in Estimated Quantities – Subdivided Items" clause, and also is not applicable to contracts for dredging work which contain the "Variations in Estimated Quantities – Dredging" clause.)

Where the quantity of a pay item in this contract is an estimated quantity and where the actual quantity of such pay item varies more than fifteen percent (15%) above or below the estimated quantity stated in this contract, an equitable adjustment in the contract price shall be made upon demand of either party. The equitable adjustment shall be based upon any increase or decrease in costs due solely to the variation above one hundred fifteen percent (115%) or below eighty–five percent (85%) of the estimated quantity. If the quantity variation is such as to cause an increase in the time necessary for completion, the Contracting Officer shall, upon receipt of a written request for an extension of time within ten (10) days from the beginning of such delay, or within such further period of time which may be granted by the Contracting Oficer prior to the date of final settlement of the contract, ascertain the facts and make such adjustment for extending the completion date as in his judgment the findings justify. (ASPR 7–603.27)

72. PROGRESS CHARTS AND REQUIREMENTS FOR OVERTIME WORK (1965 JAN)

(a) The Contractor shall within 5 days or within such time as determined by the Contracting Officer, after date of commencement of work prepare and submit to the Contracting Officer for approval a practicable schedule, showing the order in which the Contractor proposes to carry on the work, the date on which he will start the several salient features (including procurement of materials, plant and equipment) and the contemplated dates for completing the same. The schedule shall be in the form of a progress chart of suitable scale to indicate appropriately the percentage of work scheduled for completion at any time. The Contractor shall enter on the chart the actual progress at such intervals as directed by the Contracting Officer, and shall immediately deliver to the Contracting Officer three copies thereof. If the Contractor fails to submit a progress schedule within the time herein prescribed, the Contracting Officer may withhold approval of progress payment estimates until such time as the Contractor submits the required progress schedule.

(b) If, in the opinion of the Contracting Officer, the Contractor falls behind the progress schedule, the Contractor shall take such steps as may be necessary to improve his progress and the Contracting Officer may require him to increase the number of shifts, or overtime operations, days of work, or the amount of construction plant, or all of them, and to submit for approval such supplementary schedule or schedules in chart form as may be deemed necessary to demonstrate the manner in which the agreed rate of progress will be regained, all without additional cost to the Government.

(c) Failure of the Contractor to comply with the requirements of the Contracting Officer under this provision shall be grounds for determination by the Contracting Officer that the Contractor is not prosecuting the work with such diligence as will insure completion within the time specified. Upon such determination the Contracting Officer may terminate the Contractor's right to proceed with the work or any separable part thereof, in accordance with the clause of the contract entitled "Termination for Default – Damages for Delay – Time Extensions." (ASPR 7–603.48)

73. ENVIRONMENTAL LITIGATION (1974 NOV)(OCE)

(a) If the performance of all or any part of the work is suspended, delayed, or interrupted due to an order of a court of competent jurisdiction as a result of environmental litigation, as defined below, the Contracting Officer, at the request of the Contractor, shall determine whether the order is due in any part to the acts or omissions of the Contractor or a Subcontractor at any tier not required by the terms of this contract. If it is determined that the order is not due in any part to acts or omissions of the Contractor or a Subcontractor at any tier other than as required by the terms of this contract, such suspension, delay, or interruption shall be considered as if ordered by the Contracting Officer in the administration of this contract under the terms of the "Suspension of Work" clause of this contract. The period of such suspension, delay or interruption shall be considered unreasonable, and an adjustment shall be made for any increase in the cost of performance of this contract (excluding profit) as provided in that clause, subject to all the provisions thereof.

(b) The term "environmental litigation", as used herein, means a lawsuit alleging that the work will have an adverse effect on the environment or that the Government has not duly considered, either substantively or procedurally, the effect of the work on the environment. (ECI 7–671.10)

74. LOCAL AFFIRMATIVE ACTION PLAN (1972 DEC)(REVISED)

(a) As used in this clause:

(1) "Hometown Plan" or "Plan" means the formal agreement among contractors, unions, and minority representatives described in the solicitation from which this contract resulted;

(2) "the covered area" means the geographical area described in the solicitation from which this contract resulted;

(3) "Director, OFCC" means the Director, Office of Federal Contract Compliance, United States Department of Labor, or any person to whom he delegates authority; and

(4) "minority" means Negro, Spanish-surnamed American, Oriental, and American Indian, and includes both men and women.

(b) Whenever the Contractor, or any subcontractor at any tier, subcontracts a portion of the work involving any construction trade, he shall include in each such subcontract exceeding $10,000 the provisions of this clause and any applicable minority manpower utilization goals under this contract, which shall be adopted by his subcontractor, who shall with regard to his own employees and subcontractors be bound thereby to the full extent as if he were the Contractor.

(c) If the Contractor is signatory to the Plan either individually or through an association, his affirmative action program shall be in accordance with the Plan. In such case, paragraphs (a), (b), (c), (1) and (m) of this clause shall apply. However, to the extent that the Contractor, or any subcontractor at any tier, employs construction trades that are not covered by the Plan, all of the provisions of this clause shall apply. For the purposes of this paragraph (c), construction trades shall be considered not covered by the Plan: (i) if the Contractor violates a substantial requirement of the Plan or ceases to be signatory thereto; (ii) if the Director, OFCC, determines that the Plan is no longer an acceptable affirmative action plan; (iii) if the employing subcontractor is not or ceases to be signatory to the Plan, either individually or through an association; (iv) if the construction trade is not one of the trades participating in the Plan; or (v) if the construction trade, though participating, is not subject to a specific goal for minority manpower utilization and has not been exempted from such a goal by the Director, OFCC.

(d) If the Contractor is not signatory to the Plan, his affirmative action program shall be in accordance with this clause. However, if the Contractor subsequently becomes signatory to the Plan, his affirmative action program shall be in accordance with the Plan, subject to the provisions of paragraph (c) above.

(e) The Contractor shall make good faith efforts to meet at least the minimum minority manpower utilization goals set forth in the solicitation from which this contract resulted. These goals constitute a commitment of the manhours of employment and training of minority workers the Contractor will undertake in each construction trade as a percentage of the total manhours to be worked in that construction trade on all of the Contractor's construction work in the covered area during the term of this contract. The percentage of manhours for minority employment and training shall be substantially uniform throughout the term of this contract for each construction trade and for all projects. Minority employees or trainees shall not be transferred from employer-to-employer or from project-to-project for the sole purpose of meeting minority manpower utilization goals.

(f) Minority manpower utilization goals shall be satisfied, whenever possible, by employment of qualified minority journeymen; provided, however, that the Contractor shall comply with the "Apprentices and Trainees" clause of this contract.

(g) In order for the nonworking training hours of trainees to be counted in meeting the minority manpower utilization goals, such trainees must be employed by the Contractor during the training period, the Contractor must have made a commitment to employ the trainees at the completion of their training, and the trainees must be trained pursuant to established training programs which must be the equivalent, with respect to the nature, extent and duration of training offered, of the training programs provided for in the Plan.

(h) The Contractor shall take affirmative action to increase his minority manpower utilization, which action shall be at least as extensive and as specific as the following steps:

(i) Notify community organizations that the Contractor has employment opportunities available and maintain records of the organizations' response.

(ii) Maintain a file of the names and addresses of each minority worker referred to him and what action was taken with respect to each such referred worker. If such worker was neither sent to the union hiring hall for referral, nor employed by the Contractor, the Contractor's file should document this fact and the reasons therefor.

(iii) Promptly notify the Director, OFCC, when any union with whom the Contractor has a collective bargaining agreement has not referred to the Contractor a minority worker sent by the Contractor, or the Contractor has other information that the union referral process has impeded him in his efforts to meet his goal.

(iv) Participate in training programs in the area, especially those funded by the Department of Labor.

(v) Disseminate his EEO policy within his own organization by including it in any policy manual; by publicizing it in company newspapers, annual report, etc.; by conducting staff, employee and union representatives' meetings to explain and discuss the policy; by posting of the policy; and by specific review of the policy with minority employees.

(vi) Disseminate his EEO policy externally by informing, and discussing it with, all recruitment sources; by advertising in news media, specifically including minority news media; and by notifying, and discussing it with, all subcontractors and suppliers.

(vii) Make specific and constant personal (both written and oral) recruitment efforts directed at all minority organizations, schools with minority students, minority recruitment organizations and minority training organizations, within the Contractor's recruitment area.

(viii) Make specific efforts to encourage present minority employees to recruit their friends and relatives.

(ix) Validate all man specifications, selection

requirements, tests, etc.

(x) Make every effort to provide after-school, summer and vacation employment to minority youths.

(xi) Develop on-the-job training opportunities and participate and assist in any association or employer-group training programs relevant to the Contractor's employee needs consistent with his obligations under this Local Affirmative Action Plan clause.

(xii) Continually inventory and evaluate all minority personnel for promotion opportunities and encourage minority employees to seek such opportunities.

(xiii) Make sure that seniority practices, job classifications, etc., do not have a discriminatory effect.

(xiv) Make certain that all facilities and company activities are non-segregated.

(xv) Continually monitor all personnel activities to ensure that his EEO policy is being carried out.

(xvi) Solicit bids for subcontracts from available minority subcontractors engaged in the trades covered by his commitment, including circulation of minority contractor associations.

(i) The Contractor shall not, in any event, utilize the goals, timetables or affirmative action steps in such a manner as to cause or result in discrimination against any person on account of race, color, religion, sex or national origin.

(j) The Contractor shall be deemed to have met his commitment to the minority manpower utilization goals if he has not denied equal employment opportunity and if his minority manpower utilization rate meets the goals on the total of all of the Contractor's work in the covered area. The minority manpower utilization of subcontractors shall not be considered in determining whether the Contractor has met the minority manpower utilization goals. The Contractor shall not be found to be in noncompliance with the obligations of the affirmative action plan solely because of failure to meet the applicable minority manpower utilization goals. In the event of such a failure, the Contractor shall be given the opportunity to demonstrate that he has instituted all of the affirmative action steps specified in (h) above and has made every good faith effort to make these steps work toward the attainment of the goals, all to the purpose of expanding minority manpower utilization on all his projects in the covered area. If the Contractor meets the goals or if he can demonstrate that he has made every "good faith" effort to meet those goals, no formal sanctions or proceedings leading toward sanctions shall be instituted unless it is otherwise determined that he is not providing equal employment opportunity. If the Contractor has failed to comply with the requirements of Executive Order 11246, as amended, the implementing regulations, or his obligations hereunder, action will be taken to impose such sanctions as may be appropriate under the Executive Order and the regulations. When the Government proceeds with such formal action, it has the burden of proving that the Contractor has not met the requirements of his commitment hereunder, but proof of the Contractor's failure to meet the goals shall shift to him the requirement to come forward with evidence to show that he has met the "good faith" requirements of his commitment. It shall be no excuse that a union with which the Contractor has a collective bargaining agreement providing for exclusive referral failed to refer minority employees.

(k) In the event that any work or activity under this contract takes place in a year later than the latest year for which an acceptable range of minority manpower utilization was provided in the solicitation from which this contract resulted, the goals for said latest year shall apply.

(l) The Contractor, and his subcontractors at any tier, shall not enter into any subcontract or subcontract modification subject to Executive Order 11246 of September 24, 1965, as amended, with any person or firm debarred from, or who has been determined not to be a "responsible" bidder for, Government contracts and federally assisted construction contracts pursuant to the Executive Order. The Contractor, and his subcontractors at any tier, shall carry out such sanctions and penalties for violation of the Equal Opportunity clause of this contract, including suspension, termination and cancellation of existing subcontracts, as may be imposed or ordered by the Director, OFCC. The Contractor, or his subcontractors at any tier, shall be deemed to be in noncompliance with this clause, the Equal Opportunity clause, and Executive Order 11246, as amended, for any failure to carry out such sanctions and penalties.

(m) The Contractor shall keep records and file reports relating to the provisions hereof as may be required by the Government.

SUPERSEDEAS DECISION

STATE: Arizona COUNTY: Statewide
DECISION NUMBER: AZ77-5058 DATE: Date of Publication
Supersedes Decision No. AZ76-5109 dated November 26, 1976, in 41 FR 52189.
DESCRIPTION OF WORK: Building Construction (does not include single family homes and garden type apartments up to and including 4 stories), heavy and highway construction.

	Basic Hourly Rates	Fringe Benefits Payments			
		H & W	Pensions	Vacation	Education and/or Appr. Tr.
ASBESTOS WORKERS	$ 11.04	.50	$ 1.10		.02
BOILERMAKERS	13.175	.775	1.00	.50	.02
BRICKLAYERS: (Phoenix Area)					
Bricklayers; Manhole Builders; Stonemasons:					
Zone A (0-25 miles from the City Hall in Phoenix; Flagstaff and Yuma)	10.05	.65	.90		.06
Zone B (25-40 miles from the City Hall in Phoenix; and Williams AFB)	10.55	.65	.90		.06
Zone C (40-70 miles from the City Hall in Phoenix)	11.56	.65	.90		.06
Zone D (70-100 miles from City Hall in Phoenix)	12.06	.65	.90		.06
Zone E (100-200 miles from the City Hall in Phoenix)	12.56	.65	.90		.06
Zone F (200 miles and over from the City Hall in Phoenix)	13.07	.65	.90		.06
BRICKLAYERS: (Tucson Area)					
Bricklayers; Stonemasons:					
Zone A (0-15 miles from Tucson City limits)	10.42	.80	.80		.06
Zone B (Over 15 miles to 30 miles from Tucson City limits)	10.79	.80	.80		.06
Zone C (Over 30 miles to 40 miles from Tucson City limits)	11.17	.80	.80		.06
Zone D (Over 40 miles from Tucson City limits)	11.92	.80	.80		.06
Manhole Builders:					
Zone A (0-15 miles from Tucson City limits)	10.67	.80	.80		.06
Zone B (Over 15 miles to 30 miles from Tucson City limits	11.04	.80	.80		.06
Zone C (Over 30 miles to 40 miles from Tucson City limits	11.41	.80	.80		.06

DECISION NO. AZ77-5058 Page 2

	Basic Hourly Rates	Fringe Benefits Payments			
		H & W	Pensions	Vacation	Education and/or Appr. Tr.
BRICKLAYERS: (Tucson Area) (Cont'd)					
Manhole Builders: (Cont'd)					
Zone D (Over 40 miles from Tucson City limits)	$ 12.17	.80	.80		.06
CARPENTERS:					
(Central and Southern Areas):					
Carpenters; Drywall Applicators; Saw Filers; Shingler	9.785	.845	.955		.05
Floorlayers (finish); Pile-drivermen	10.07	.845	.955		.05
Millwrights	10.20	.845	.955		.05
(Northern Area)					
Carpenters; Drywall Applicator; Saw Filer; Shingler	11.66	.845	.955		.05
Floorlayers (finish); Pile-drivermen	11.945	.845	.955		.05
Millwrights	12.075	.845	.955		.05
CEMENT MASONS:					
(Apache, Coconino, Gila, Mohave, Navajo, Yavapai, Yuma and the Northern portions of Graham, Greenlee, Maricopa and Pinal Counties)					
(Central and Southern Areas)					
Cement Masons	9.51	.95	1.00		.05
Concrete troweling machine; Sawing and scoring machine; Curb and gutter machine	9.67	.95	1.00		.05
(Northern Area)					
Cement Masons	11.385	.95	1.00		.05
Concrete troweling machine; Sawing and scoring machine; Curb and gutter machine	11.545	.95	1.00		.05
(Cochise, Pima, Santa Cruz and the southern portions of Graham, Greenlee, Maricopa and Pinal Counties)					
(Central and Southern Areas)					
Cement Masons	10.22	.85	.85		.05
Concrete troweling machine; Sawing and scoring machine; Curb and gutter machine	10.385	.85	.85		.05

DECISION NO. AZ77-5058 Page 3

	Basic Hourly Rates	Fringe Benefits Payments			
		H & W	Pensions	Vacation	Education and/or Appr. Tr.
DRYWALL: (From Court House in Phoenix, Mesa, including Luke and Williams Air Force Bases)					
Tapers:					
Zone A (0-40 miles)	$ 9.71	.59	.50		.07
Zone B (41-60 miles)	10.71	.59	.50		.07
Zone C (61 miles and over)	11.96	.59	.50		.07
Texture Spraymen:					
Zone A (0-40 miles)	9.81	.59	.50		.07
Zone B (41-60 miles)	10.81	.59	.50		.07
Zone C (61 miles and over)	12.06	.59	.50		.07
ELECTRICIANS: (Flagstaff Area)					
Zone A (in the City of Flagstaff, that area lying in a square extending 20 miles North-South, East and West of the Post Office) (Williams, Winslow and Sedona covering a square extending 5 miles North-South, East and West of the Post Office in each town)					
Electricians	12.64	.96	1%+.70		1/2%
Cable Splicers	12.84	.96	1%+.70		1/2%
Zone B (All territoral jurisdiction allotted outside of Zone A)					
Electricians	14.94	.96	1%+.70		1/2%
Cable Splicers	15.14	.96	1%+.70		1/2%
ELECTRICIANS: (Gallup Area-Northern Apache County)					
Electricians	12.60	.60	1%+.70		1/2%
Cable Splicers	13.65	.60	1%+.70		1/2%
ELECTRICIANS: (Globe-Miami Area)					
Zone A (The area within 16 road miles beginning where the Southern Pacific Railroad intersects Highway 60-70 at Kaiser Crossing)					
Electricians	13.09	6%	9%		1/2%
Cable Splicers	13.34	6%	9%		1/2%

DECISION NO. AZ77-5058 Page 4

	Basic Hourly Rates	Fringe Benefits Payments			
		H & W	Pensions	Vacation	Education and/or Appr. Tr.
ELECTRICIANS: (Globe-Miami Area) (Cont'd)					
Zone B (16-28 miles)					
Electricians	$ 13.79	6%	9%		1/2%
Cable Splicers	14.04	6%	9%		1/2%
Zone C (28-46 miles)					
Electricians	14.39	6%	9%		1/2%
Cable Splicers	14.64	6%	9%		1/2%
Zone D (46 miles and over)					
Electricians	15.09	6%	9%		1/2%
Cable Splicers	15.34	6%	9%		1/2%
ELECTRICIANS: (Phoenix)					
Zone A (Beginning at the northeast corner, a line extending southward on Bush Highway to McKellips Road; a line extending east on McKellips Road to a point one mile east of the intersection of State Highway 88 and U. S. 60 and 70 near Apache Junction; Southward to Baseline Road; west on Baseline Road to the intersection of Baseline Road and Ellsworth Road; South on Ellsworth Road to Hunt Highway; west on Hunt Highway to Powers Road; a line extending south on Powers Road five miles, then extending straight west to a point five miles west of Interstate 10, then northwest on a line parallel with Interstate 10 to intersect with Pecos Road, west on Pecos Road to intersect with Cotton Lane, North on Cotton Lane to Beloat Road. West on Beloat Road to Airport Road. North on Airport Road in a straight line to intersect Waddell Road. East on Waddell Road to intersect with Cotton Lane, North on Cotton Lane to Deer Valley Drive and east on Deer Valley Drive to intersect with Bush Highway including Luke and Williams Air Force Bases.)					

DECISION NO. AZ77-5058 Page 5

	Basic Hourly Rates	Fringe Benefits Payments			
		H & W	Pensions	Vacation	Education and/or Appr. Tr.
ELECTRICIANS: (Cont'd)					
Electricians	$ 12.04	.96	1%+.70		1/2%
Cable Splicers	12.64	.96	1%+.70		1/2%
Zone B (Area outside of Zone A and bounded by a line formed by measuring sixteen (16) road miles from the outer boundaries of an area enclosed by the following boundaries: Power Road on the east, from Hunt Highway on the south to one mile south of Pinnacle Peak Road on the north; One mile south Pinnacle Peak Road to Cotton Lane on the west; Cotton Lane to Pecos Road on the south. Pecos Road to Price Road and from Price Road to Hunt Highway on the south. Hunt Highway to Powers Road on the east)					
Electricians	14.15	.96	1%+.70		1/2%
Cable Splicers	14.85	.96	1%+.70		1/2%
Zone C (outside edge of Zone B and extended to the outside limits of the union's jurisdiction)					
Electricians	15.23	.96	1%+.70		1/2%
Cable Splicers	15.99	.96	1%+.70		1/2%
ELECTRICIANS: (Kingman)					
Zone A (The area within the 16th road mile from the City Hall)					
Electricians	12.04	.96	1%+.70		1/2%
Cable Splicers	12.64	.96	1%+.70		1/2%
Zone B (from the 16th road mile and extend up to and including the 32nd road mile)					
Electricians	14.15	.69	1%+.70		1/2%
Cable Splicers	14.85	.69	1%+.70		1/2%

	Basic Hourly Rates	Fringe Benefits Payments			
		H & W	Pensions	Vacation	Education and/or Appr. Tr.
ELECTRICIANS: (Kingman) (Cont'd)					
Zone C (From the 32nd road mile and extend up to the outside limits of the union's jurisdiction)					
Electricians	$ 15.23	.96	1%+.70		1/2%
Cable Splicers	15.99	.96	1%+.70		1/2%
ELECTRICIANS: (Prescott)					
Zone A (The area within 20 road miles from the City Hall)					
Electricians	12.04	.96	1%+.70		1/2%
Cable Splicers	12.64	.96	1%+.70		1/2%
Zone B (From the 20th road mile and extend up to and including the 32nd road mile)					
Electricians	14.15	.96	1%+.70		1/2%
Cable Splicers	14.85	.96	1%+.70		1/2%
Zone C (From the 32nd road mile and extend to the outside limits of the union's jurisdiction)					
Electricians	15.23	.96	1%+.70		1/2%
Cable Splicers	15.99	.96	1%+.70		1/2%
ELECTRICIANS: (Tucson Area)					
Zone A (Area within 16 road miles from the City Hall in Tucson and Douglas. Nogales and Sierra Vista shall be limited to 16 road miles from the center of the respective towns)					
Electricians	13.09	6%	9%		1/2%
Cable Splicers	13.34	6%	9%		1/2%
Zone B (Area from the outer limits of the 16 mile radius and extend up to and including 12 road miles)					
Electricians	13.79	6%	9%		1/2%
Cable Splicers	14.04	6%	9%		1/2%

	Basic Hourly Rates	Fringe Benefits Payments			
		H & W	Pensions	Vacation	Education and/or Appr. Tr.
ELECTRICIANS: (Tucson Area) (Cont'd)					
Zone C (Area from 12 road miles up to and including 30 road miles)					
Electricians	$ 14.39	5%	8%		1/2%
Cable Splicers	14.64	5%	8%		1/2%
Zone D (Area from 30 road miles and extend to the outside limits of the union's jurisdiction)					
Electricians	15.09	5%	8%		1/2%
Cable Splicers	15.34	5%	8%		1/2%
ELECTRICIANS: (Yuma Area)					
Zone A (Yuma North of Colorado River, East of County Avenue 5E, South to County 16th Street, and West to County Avenue E; Cities of Somerton and Parker)					
Electricians	11.88	.45	7%		1%
Cable Splicers	12.13	.45	7%		1%
Zone B (1-16 miles from Zone A)					
Electricians	12.58	.45	7%		1%
Cable Splicers	12.83	.45	7%		1%
Zone C (16-42 miles from Zone A)					
Electricians	13.18	.45	7%		1%
Cable Splicers	13.43	.45	7%		1%
Zone D (42 miles from Zone A and out)					
Electricians	13.88	.45	7%		1%
Cable Splicers	14.13	.45	7%		1%
ELEVATOR CONSTRUCTORS	11.55	.495	.32	3%+a	.02
ELEVATOR CONSTRUCTORS' HELPERS	70%JR	.495	.32	3%+a	.02
ELEVATOR CONSTRUCTORS' HELPERS (PROB.)	50%JR				
GLAZIERS	9.42	.70	.30		.01
IRONWORKERS:					
Central and Southern Areas	10.94	1.14	1.86		.08
Northern Area	12.94	1.14	1.86		.08
LATHERS: (Tucson Area)					
Zone A (0-30 miles from Tucson)	9.28	.35	.40		
Zone B (30-40 miles from Tucson)	9.78	.35	.40		
Zone C (40-50 miles from Tucson)	10.03	.35	.40		
Zone D (Area outside Zone C)	10.78	.35	.40		

DECISION NO. AZ77-5058 Page 8

	Basic Hourly Rates	Fringe Benefits Payments			
		H & W	Pensions	Vacation	Education and/or Appr. Tr.
PAINTERS: (Flagstaff Area)					
Zone A (From Falgstaff Court House to 20 miles)					
Brush; Soft Floor Layers	$ 9.73	.70	.60	.50	.20
Brush, steel and bridge	10.23	.70	.60	.50	.20
Spray	10.18	.70	.60	.50	.20
Spray, steel and bridge	10.73	.70	.60	.50	.20
Zone B (20-35 miles from Court House in Flagstaff)					
Brush; Soft Floor Layers	10.48	.70	.60	.50	.20
Brush, steel and bridge	10.98	.70	.60	.50	.20
Spray	10.93	.70	.60	.50	.20
Spray, steel and bridge	11.48	.70	.60	.50	.20
Zone C (35-80 miles from Court House in Flagstaff)					
Brush; Soft Floor Layers	11.48	.70	.60	.50	.20
Brush, steel and bridge	11.98	.70	.60	.50	.20
Spray	11.93	.70	.60	.50	.20
Spray, steel and bridge	12.48	.70	.60	.50	.20
Zone D (80 miles and over from Court House in Flagstaff)					
Brush; Soft Floor Layers	11.73	.70	.60	.50	.20
Brush, steel and bridge	12.23	.70	.60	.50	.20
Spray	12.18	.70	.60	.50	.20
Spray, steel and bridge	12.73	.70	.60	.50	.20
PAINTERS: (Phoenix Area)					
Zone A (0-40 miles from Court House in Phoenix, Mesa and including Luke and Williams Air Force Bases):					
Brush	9.69	.59	.38		.05
Spray	9.94	.59	.38		.05
Steel and bridge, brush	10.04	.59	.38		.05
Steel and bridge, spray	10.24	.59	.38		.05
Zone B (41-60 miles from Court House in Phoenix)					
Brush	10.69	.59	.38		.05
Spray	10.94	.59	.38		.05
Steel and bridge, brush	11.04	.59	.38		.05
Steel and bridge, spray	11.24	.59	.38		.05

DECISION NO. AZ77-5058 Page 9

	Basic Hourly Rates	Fringe Benefits Payments			
		H & W	Pensions	Vacation	Education and/or Appr. Tr.
PAINTERS: (Phoenix Area) (Cont'd)					
Zone C (60 miles and over from Court House in Phoenix)					
Brush	$ 11.69	.59	.38		.05
Spray	11.94	.59	.38		.05
Steel and bridge, brush	12.04	.59	.38		.05
Steel and bridge, spray	12.24	.59	.38		.05
PAINTERS: (Tucson and Yuma Areas)					
Zone A (0-30 miles from Stone and Congress in Tucson and from the County Courthouse in Yuma)					
Brush	8.78	.67	.35		.04
Spray	9.28	.67	.35		.04
Steel and bridge, brush	9.78	.67	.35		.04
Steel and bridge, spray	10.28	.67	.35		.04
Zone B (31-40 miles from Stone and Congress in Tucson and from the County Courthouse in Yuma)					
Brush	9.53	.67	.35		.04
Spray	10.03	.67	.35		.04
Steel and bridge, brush	10.53	.67	.35		.04
Steel and bridge, spray	11.03	.67	.35		.04
Zone C (41-50 miles from Stone and Congress in Tucson and from the County Courthouse in Yuma)					
Brush	10.03	.67	.35		.04
Spray	10.53	.67	.35		.04
Steel and bridge, brush	11.03	.67	.35		.04
Steel and bridge, spray	11.53	.67	.35		.04
Zone D (51 miles and over from Stone and Congress in Tucson and from the County Courthouse in Yuma)					
Brush	10.78	.67	.35		.04
Spray	11.28	.67	.35		.04
Steel and bridge, brush	11.78	.67	.35		.04
Steel and bridge, spray	12.28	.67	.35		.04

RW-5

	Basic Hourly Rates	Fringe Benefits Payments			
		H & W	Pensions	Vacation	Education and/or Appr. Tr.
PLASTERERS: (Phoenix Area)					
Zone A (0-35 miles from Phoenix)	$ 9.045	.60	.85		.035
Zone B (35-60 miles from Phoenix)	9.795	.60	.85		.035
Zone C (60 miles and over from Phoenix)	10.67	.60	.85		.035
PLASTERERS: (Tucson Area)					
Zone A (0-30 miles from Tucson)	8.57	.35	.60		
Zone B (30-40 miles from Tucson)	9.07	.35	.60		
Zone C (40-50 miles from Tucson)	9.32	.35	.60		
Zone D (50 miles and over from Tucson)	10.07	.35	.60		
PLASTERERS' TENDERS:					
Central and Southern Areas	9.16	.85	.85		.10
PLUMBERS; Steamfitters:					
FREE ZONE 0-15 miles					
The "Free Zone" (Zone I) shall be 15 road miles from the stated base points in Flagstaff, Yuma, Tucson and Douglas. The "Free Zone" from Phoenix shall be 15 miles radius from the stated base point. In addition, all areas within the city limits of Phoenix, Chandler, Scottsdale, Tempe, Glendale, Mesa, Kingman, Havasu City, Prescott, Winslow and Holbrook will be included as Free Zones. Any work contracted for outside of these Zones will be determined from the Phoenix and Tucson basing points.					
Zone I (0-15 miles)	11.14	.75	1.35		.10
Zone II (15-30 miles)	11.49	.75	1.35		.10
Zone III (30-40 miles)	11.91	.75	1.35		.10
Zone IV (40 miles and over)	13.21	.75	1.35		.10

	Basic Hourly Rates	Fringe Benefits Payments			
		H & W	Pensions	Vacation	Education and/or Appr. Tr.
ROOFERS: (Tucson Area)					
Asbestos; Shinglers; Tile and Waterproofing:					
Zone A (0-44 miles from Tucson)	$ 8.97	.845	.20		.02
Zone B (Over 44 miles from Tucson)	10.72	.845	.20		.02
ROOFERS: (Phoenix Area)					
Roofers and Waterproofers	9.66	.845	.20		.02
SHEET METAL WORKERS:					
Zones Bases - from the Administration Building or City Hall in Flagstaff, Kingman, Phoenix, Prescott and Yuma):					
Zone I (0-25 miles)	10.43	3%+.70	1.10		.07
Zone II (25-50 miles)	11.08	3%+.70	1.10		.07
Zone III (50 miles and over)	12.93	3%+.70	1.10		.07
SHEET METAL WORKERS:					
Zone Bases - from the Administration Building or City Hall in Douglas and Tuscon:					
Zone A (0-22 miles)	9.99	3%+.94	1.91		.04
Zone B (22-45 miles)	10.94	3%+.94	1.91		.04
Zone C (Over 45 miles)	12.49	3%+.94	1.91		.04
SOFT FLOOR LAYERS: (Phoenix Area)					
Zone A (0-40 miles from Court House in Phoenix and Flagstaff including Luke and Williams Air Force Bases)	8.81	.49	.12		.12
Zone B (41-60 miles from Court House in Phoenix and Flagstaff)	9.81	.49	.12		.12
Zone C (61 miles and over from Court House in Phoenix and Flagstaff)	10.81	.49	.12		.12
SOFT FLOOR LAYERS: (Tucson Area)	9.25	.38			
SPRINKLER FITTERS	12.29	.65	.95		.08
TERRAZZO WORKERS; Tile Setters; Marble Mason: (Tucson Area)	9.42	.70	.75		

DECISION NO. AZ77-5058 Page 12

	Basic Hourly Rates	Fringe Benefits Payments			
		H & W	Pensions	Vacation	Education and/or Appr. Tr.
LINE CONSTRUCTION:					
Zone I (Phoenix and Tucson 30 mile radius from center of town):					
Groundmen	8.79	8%	8%		1/2%
Equipment Operators; Powdermen; Mechanics	10.15	8%	8%		1/2%
Linemen; Technicians; Crane Operators; Linemen Welder	11.45	8%	8%		1/2%
Cable Splicers	11.82	8%	8%		1/2%
Zone I-A (Douglas, Flagstaff, Globe, Kingman, Prescott and Yuma 10 mile radius from center of town):					
Groundmen	9.55	8%	8%		1/2%
Equipment Operators; Powdermen; Mechanics	10.85	8%	8%		1/2%
Linemen; Technicians; Crane Operators; Linemen Welder	12.20	8%	8%		1/2%
Cable Splicers	12.64	8%	8%		1/2%
Zone II (Other Areas):					
Groundmen	10.26	8%	8%		1/2%
Equipment Operators; Powdermen; Mechanics	11.57	8%	8%		1/2%
Linemen; Technicians; Crane Operators; Linemen Welder	12.93	8%	8%		1/2%
Cable Splicers	13.31	8%	8%		1/2%

FOOTNOTE:

a. Employer contributes 4% of basic hourly rate for 5 years' service and 2% basic hourly rate for 6 months to 5 years' service as Vacation Pay Credit. Six Paid Holidays: A through F.

PAID HOLIDAYS:

A-New Year's Day; B-Memorial Day; C-Independence Day; D-Labor Day; E-Thanksgiving Day; F-Christmas Day.

DECISION NO. AZ77-5058 Page 13

	Basic Hourly Rates C & S AREA	Basic Hourly Rates N AREA	Fringe Benefits Payments			
			H & W	Pensions	Vacation	Education and/or Appr. Tr.
LABORERS						
Group 1:	$ 8.01	$ 9.635	.85	.85		.10
Group 2:	8.14	9.765	.85	.85		.10
Group 3:	8.28	9.905	.85	.85		.10
Group 4:	8.39	10.015	.85	.85		.10
Group 5:	8.56	10.185	.85	.85		.10
Group 6:	8.935	10.56	.85	.85		.10
Group 7:	9.565	11.19	.85	.85		.10
LABORERS (Tunnel and Shaft Work)						
Group 1:	8.255	9.88	.85	.85		.10
Group 2:	8.42	10.045	.85	.85		.10
Group 3:	8.55	10.175	.85	.85		.10
Group 4:	8.91	10.535	.85	.85		.10
Group 5:	9.085	10.71	.85	.85		.10
Group 5A:	9.335	10.96	.85	.85		.10
POWER EQUIPMENT OPERATORS (Except Piledriving and Steel Erection)						
Group 1:	8.60	10.225	.95	.90		.06
Group 2:	8.97	10.595	.95	.90		.06
Group 3:	9.43	11.055	.95	.90		.06
Group 4:	9.96	11.585	.95	.90		.06
Group 5:	10.49	12.115	.95	.90		.06
Group 5A:	10.80	12.425	.95	.90		.06
Group 6:	11.13	12.755	.95	.90		.06
Group 7:	11.73	13.355	.95	.90		.06
TRUCK DRIVERS						
Group 1:	8.19	9.815	.85	.85		.06
Group 2:	8.32	9.945	.85	.85		.06
Group 3:	8.54	10.165	.85	.85		.06
Group 4:	8.89	10.515	.85	.85		.06
Group 5:	9.05	10.675	.85	.85		.06
Group 5A:	9.23	10.855	.85	.85		.06
Group 6:	9.37	10.995	.85	.85		.06
Group 7:	9.78	11.405	.85	.85		.06
Group 8:	10.295	11.92	.85	.85		.06
Group 8A:	10.95	12.575	.85	.85		.06
Group 8B:	10.64	11.265	.85	.85		.06
Group 8C:	8.75	10.375	.85	.85		.06

LABORERS

Group 1: All Helpers not herein separately classified; Cesspool Diggers and installers; Chat Box Man; Checker, tool dispatcher; Concrete dump manbelt, pipe and/or hoseman; Dumpman and/or spotter; Fence builder, guard rail builder highway; Form strippers; Labor, general or construction; Landscape gardener and nurseryman; Packing rod steel and pans; Rip rap stoneman; Astro turf layer; Cleanup, Bull gang; Trackman-railroad

Group 2: Cement finisher tender; Concrete curer (impervious membrane); Cutting torch operator; Fine grader (highway, engineering and sewer work only); Kettleman - Tarman; Power type concrete buggy

Group 3: Bander; Chucktender (except tunnel); Creosote tieman; Guinea chaser; Powderman helper; Rip-rap stone paver; Sandblaster (pot tender); Spiker and wrenchers

Group 4: Cement dumpers (Skip-type mixer or handling bulk cement); Chain saw machines (on clearing and grubbing); Concrete vibrating machines; Cribber and shorer (except tunnel); Floor sanders concrete; Hydraulic jacks, and similar mechanical tools not separately classified herein; Operators and tenders of penumatic and electric tools; Pipe caulker and/or backup man (pipeline); Pipe wrapper; Pneumatic gopher; Rigger/Signalman (pipeline)

Group 5: Air and water wash-out nozzleman; Asphalt rakers and ironers; Driller; Grade setter (pipeline); Hand guided trencher and similar operated equipment; Jackhammer and/or pavement breakers; Pipelayers (including but not limited to non-metallic, transite and plastic pipe, water pipe, sewer pipe, drain pipe, underground tile and conduit); Rock slinger; Scaler (using Bos'ns chairs or safety belt); Tampers (mechanical - all types); Precast manhole erector

Group 6: Concrete Cutting Torch; Concrete saw (hand guided); Driller, (core, diamond, wagon or air track); Drill doctor and/or air tool repairman; Gunman and mixerman (gunite); Sandblaster (nozzleman)

Group 7: Concrete Road Form Setter; Gunite nozzleman or rodman; Drillers, Joy Mustang, PR 143, 220 Gardner-Denver, Hydrasonic; Powderman; Scaler (drillers); Welders and/or pipelayers installing process piping; Form setter and/or builder

LABORERS
(Tunnel and Shaft Workers)

Group 1: Bull Gang, muckers, trackman; Dumpmen; Concrete crew (includes rodders and spreaders); Grout crew; Swamper (brakeman and switchmen on tunnel work); Change house man

Group 2: Nipper; Chucktender, Cabletender, Vibratorman, Jackhammer, Pneumatic tools (except driller)

Group 3: Grout Gunman

Group 4: Timberman, Retimberman - wood or steel blaster, driller powderman; Cherry pickerman; Powderman - primer house; Steel form raiser and setter; Kemper and other pneumatic concrete placer operator; Miner - finisher; Miners - Tunnel (hand or machine)

Group 5: Diamond Drill

Group 5A: Shaft and Raise Miner Welder

POWER EQUIPMENT OPERATORS
(Except Piledriving and Steel Erection)

Group 1: Air compressor operator; Field equipment servicemen helper; Heavy duty repair helper; Heavy duty welder helper; Oiler; Pump operator

Group 2: Conveyor operator; Generator operator - portable; Power grizzly operator; Self-propelled chip spreading machine - conveyor operator; Watch fireman; Welding machine operator - gasoline and diesel power

Group 3: Concrete mixer operator - skip type; Dinky operator - (under 20 tons wt.); Driver-moto paver, Slurry seal machine, and similar type equipment; Motor crane driver; Power sweeper operator - self-propelled; Ross carrier or fork lift operator; Skip loader operator - all types with rated capacity 1-1/2 cu. yds. or less; Wheel type tractor operator (Ford, Ferguson, or similar type) with attachments such as fresno, push blade, post hole auger, mower, etc., excluding compacting equipment

Group 4: A-Frame boom truck or winch truck operator; Asphalt plant firemen; Elevator hoist operator (including Tuskey hoist or similar types); Grade checker (excluding civil engineer); Multiple power concrete saw operator; Pavement breaker, mechanical compactor operator, power propelled; Roller operator - all types - except as otherwise classified; Screed operator; Self-propelled chip spreading machine operator (including Slurry seal machine operator) Stationary pipewrapping and cleaning machine operator; Tugger operator

Group 5: Aggregate plant operator (including crushing, screening and sand plants, etc.); Asphalt plant mixer operator; Beltcrete machine; Boring machine operator; Concrete mechanical tamping, spreading or finishing machine (incl. Clary, Johnson, or similar types); Concrete pump operator; Concrete batch plant operator, all types and sizes; Conductor, brakeman, or handler; Drilling machine, including water wells; Elevating grader operator - all types and sizes (except as otherwise classified); Field equipment serviceman; Highline cableway signalman; Kolman belt loader operator or similar, w/belt width 48" or over; Locomotive engineer (incl. Dinky-20 tons wt. and over); Moto-paver and similar type equipment operator; Operating engineer rigger; Pneumatic-tired scraper operator (Turnapull, Euclid, Cat, D-W, Hancock and similar equipment) up to and including 12 cu. yds.; Power jumbo form setter operator; Pressure grout machine operator (as used in heavy engineering construction); Road Oil mixing machine operator; Roller operator-on all types asphalt pavement; Self-propelled compactor, with blade; Skip loader operator-all types with rated capacity over 1-1/2 but less than 4 cu. yds.; Slip form operator (power driven lifting device for concrete forms); Soil cement road mixing machine operator - single pass type; Stationary Central generating plant operator-rated 300 k.w. or more; Surface heater and planer operator; Traveling pipewrapping machine operator

Group 5-A: Heavy duty mechanic and/or welder; Pneumatic tired scraper, all sizes and types over 12 cu. yds. up to and incl. 45 cu. yds. MRC (Turnapull, Euclid, Cat, D-W, Hancock and similar equipment); Tractor operator (Pusher,

POWER EQUIPMENT OPERATORS (Cont'd)
(Except Piledriving and Steel Erection)

Bulldozer, Scraper) up to 400 net horsepower rating; Trenching machine operator

Group 6: Auto-Grade Machine (CMI and similar equipment); Boring machine operator (including Mole, Badger and similar type); Concrete mixer operator-paving type, and mobile mixer; Concrete pump operator with boom attachment (Truck mounted); Crane operator-crawler and pneumatic type, under 100 ton capacity MRC; Crawler type tractor operator - with boom attachment; Derrick operator; Forklift operator for hoisting personnel; Grade-all operator; Helicopter hoist; Highline cableway operator (less than 20 tons rated capacity); Mass excavator operator (150 Bucyrus Erie and similar types); Mechanical hoist operator (two or more drums); Motor grade operator - any type power blade; Motor grade operator with elevating grader attachment; Mucking machine operator; Overhead crane operator; Piledriver engineer (portable, stationary or skid rig); Pneumatic-tired scraper operator - all sizes and types (Turnapull, Euclid, Cat, D-W, Hancock & similar equipment over 45 cu. yds., MRC); Power driven ditch lining or ditch trimming machine operator; Skip loader operator - all types with rated capacity 4 cu. yds., but less than 8 cu. yds.; Slip form paving machine operator (including Gunnert, Zimmerman & similar types); Specialized power digger operator- attached to wheel-type tractor; Tower crane (or similar type) operator; Tractor operator (Pusher, Bulldozer, Scraper (400 net horsepower and over; Tugger operator (two or more); Universal equipment operator-Shovel, Backhoe, Dragline, Clamshell, etc., up to 8 cu. yds.

Group 7: Crane operator - pneumatic or crawler (100 ton hoisting capacity and over MRC rating); Helicopter pilot - FAA qualified when used in construction work; Highline cableway operator, over 20 ton rated capacity and using traveling head and tail tower; Remote control earth moving equipment operator; Skip loader operator - all types with rate capacity of 8 cu. yds. or more; Universal equipment - Shovel, backhoe, dragline, clamshell, etc., 8 cu. yds. and over

TRUCK DRIVERS

Group 1: Teamsters; Pickups; Station Wagons; Manhaul driver

Group 2: Dump or flatrack (2 or 3 axle); Water truck (under 2500 gals.); Buggymobile (1 c. y. or less); Fireman; Bus drivers, ambulance driver, self-propelled street sweeper; Warehouseman

Group 3: Dump or flatrack (4 axle); Dumptor or dumpster (less than 7 c. y.); Water truck (2500 gals. but less than 4000 gals.)

Group 4: Dumptor or dumpster (7 c. y. but less than 16 c. y.); Dump or flatrack (5 axle); Water truck (4000 gals. and over); Slurry type equipment or leverman; Flaherty spreader or similar type equipment or leverman; Transit mix (8 c. y. or less)

Group 5: Dump or flatrack (6 axle); Transit mix (over 8 c. y. but less than 10.5 c. y.); Rock truck (i.e. Dart, Euclid and other similar type end dumps, single unit, less than 16 c. y.))

Group 5A: Oil tanker or spreader and/or bootman, retortman or leverman

Group 6: Transit mix (over 10.5 c. y. but less than 14 c. y.); Ross Carrier fork lift or lift truck; Hydro lift, Swedish Crane Iowa 300 and similar types; Concrete pump (when integral part of transit mix truck); Dump or flatrack (7 axle)

Group 7: Dump or Flatrack (8 axles)

Group 8: Off-Highway Equipment driver including but not limited to: 2 or 4 wheel power unit, i.e., Cat DW Series, Euclid, International and similar type equipment, transporting material when top loaded or by external means including pulling water tanks, fuel tanks or other applications under Teamster Classifications; Rock trucks (Dart, Euclid, or other similar end dump types) 16 c. y. and over; Ejectalls; Dumptor or dumpster (16 c. y. and over); Dump or flatrack (9 axles)

Group 8A: Heavy duty mechanic/welder; Body and fender man

Group 8B: Field Equipment serviceman or fuel truck driver

Group 8C: Heavy duty mechanic/welder helper

DECISION NO. AZ77-5058 - Mod. #1
(42 FR 31856 - June 17, 1977)
Statewide, Arizona

Change:

	Basic Hourly Rates	Fringe Benefits Payments			
		H & W	Pensions	Vacation	Education and/or Appr. Tr.
Bricklayers (Tucson Area):					
Bricklayers, Stonemasons:					
Zone A	$ 10.82	.90	.85		.06
Zone B	11.19	.90	.85		.06
Zone C	11.56	.90	.85		.06
Zone D	12.32	.90	.85		.06
Manhole Builders:					
Zone A	11.07	.90	.85		.06
Zone B	11.44	.90	.85		.06
Zone C	11.81	.90	.85		.06
Zone D	12.57	.90	.85		.06
Electricians (Phoenix, Kingman and Prescott Areas)					
Zone A	12.24	.96	3%+.78		3/4%
Zone B	14.38	.96	3%+.78		3/4%
Zone C	15.48	.96	3%+.78		3/4%
Electricians (Tucson Area)					
Zone A					
Electricians	13.09	6%	3%+8%		1/2%
Cable Splicers	13.34	6%	3%+8%		1/2%
Zone B					
Electricians	13.79	6%	3%+8%		1/2%
Cable Splicers	14.04	6%	3%+8%		1/2%
Zone C					
Electricians	14.39	6%	3%+8%		1/2%
Cable Splicers	14.64	6%	3%+8%		1/2%
Zone D					
Electricians	15.09	6%	3%+8%		1/2%
Cable Splicers	15.34	6%	3%+8%		1/2%
Line Construction:					
Zone I (Phoenix and Tucson 30 mile radius from center of town)					
Groundmen	9.67	8%	3%+7%		1/2%
Equipment Operators; Powdermen; Mechanics	11.17	8%	3%+7%		1/2%
Linemen; Technicians; Crane Operators; Linemen Welder	12.60	8%	3%+7%		1/2%
Cable Splicers	13.00	8%	3%+7%		1/2%
Zone I-A (Douglas, Flagstaff, Globe, Kingman, Prescott and Yuma 10 mile radius from center of town)					
Groundmen	$ 10.51	8%	3%+7%		1/2%
Equipment Operators; Powdermen; Mechanics	11.94	8%	3%+7%		1/2%
Linemen; Technicians; Crane Operators; Linemen Welder	13.42	8%	3%+7%		1/2%
Zone II (Other areas):					
Groundmen	11.29	8%	3%+7%		1/2%
Equipment Operators; Powdermen; Mechanics	12.73	8%	3%+7%		1/2%
Linemen; Technicians; Crane Operators; Linemen Welder	14.22	8%	3%+7%		1/2%
Cable Splicers	14.65	8%	3%+7%		1/2%

DECISION NO. AZ77-5058 - Mod. #2
(42 FR 31056 - June 17, 1977)
Statewide, Arizona

	Basic Hourly Rates	Fringe Benefits Payments			
		H & W	Pensions	Vacation	Education and/or Appr. Tr.
Change:					
Electricians (Flagstaff Area):					
Zone A					
Electricians	$ 12.20	.96	3%+.78		1/2%
Cable Splicers	12.20	.96	3%+.78		1/2%
Zone B					
Electricians	14.50	.96	3%+.78		1/2%
Cable Splicers	14.50	.96	3%+.78		1/2%
Electricians (Gallup Area-Northern Apache County):					
Electricians	12.60	.60	3%+.70		1/2%
Cable Splicers	13.65	.60	3%+.70		1/2%
Electricians (Globe-Miami Area):					
Zone A					
Electricians	13.09	6%	3%+8%		1/2%
Cable Splicers	13.34	6%	3%+8%		1/2%
Zone B					
Electricians	13.79	6%	3%+8%		1/2%
Cable Splicers	14.04	6%	3%+8%		1/2%
Zone C					
Electricians	14.39	6%	3%+8%		1/2%
Cable Splicers	14.64	6%	3%+8%		1/2%
Zone D					
Electricians	15.09	6%	3%+8%		1/2%
Cable Splicers	15.34	6%	3%+8%		1/2%
Electricians (Yuma Area):					
Zone A					
Electricians	11.88	5.25%	3%+8.35%		
Cable Splicers	12.13	5.25%	3%+8.35%		
Zone B					
Electricians	12.58	5.25%	3%+8.35%		
Cable Splicers	12.83	5.25%	3%+8.35%		
Zone C					
Electricians	13.18	5.25%	3%+8.35%		
Cable Splicers	13.43	5.25%	3%+8.35%		
Zone D					
Electricians	13.88	5.25%	3%+8.35%		
Cable Splicers	14.13	5.25%	3%+8.35%		

DECISION NO. AZ77-5058 - Mod. #3
(42 FR 31056 - June 17, 1977)
Statewide, Arizona

Change:

	Basic Hourly Rates	Fringe Benefits Payments			
		H & W	Pensions	Vacation	Education and/or Appr. Tr.
Ironworkers:					
Central and Southern Areas	$11.48	$1.24	$2.22		.08
Northern Area	13.48	1.24	2.22		.08
Plumbers; Steamfitters:					
Zone I	11.74	.75	1.35		.10
Zone II	12.09	.75	1.35		.10
Zone III	12.51	.75	1.35		.10
Zone IV	13.81	.75	1.35		.10
Sheet Metal Workers:					
(Zone Bases - from the Administration Building or City Hall in Flagstaff, Kingman, Phoenix, Prescott and Yuma)					
Zone I	10.48	3%+.75	1.20		.10
Zone II	11.13	3%+.75	1.20		.10
Zone III	12.98	3%+.75	1.20		.10
(Zone Bases - from the Administration Building or City Hall in Douglas and Tucson)					
Zone A	9.90	3%+1.04	1.91		.04
Zone B	10.85	3%+1.04	1.91		.04
Zone C	12.40	3%+1.04	1.91		.04
Terrazzo Workers; Tile Setters; Marble Masons (Tucson Area)	9.27	.90	.85		

DECISION NO. AZ77-5058 - Mod. #4
(42 FR 31056 - June 17, 1977
Statewide, Arizona

Changes:

	Basic Hourly Rates	Fringe Benefits Payments			
		H & W	Pensions	Vacation	Education and/or Appr. Tr.
Asbestos Workers	$11.94	.50	$1.20		.02
Bricklayers; Stonemasons (Phoenix Area):					
Zone A	10.65	.65	.90		.09
Zone B	11.50	.65	.90		.09
Zone C	12.04	.65	.90		.09
Zone D	12.57	.65	.90		.09
Zone E	12.99	.65	.90		.09
Zone F	13.85	.65	.90		.09
Drywall Tapers (Phoenix, Mesa, Luke and Williams Air Force Bases)					
Zone A	10.21	.59	.50		.07
Zone B	11.21	.59	.50		.07
Zone C	12.46	.59	.50		.07
Electricians (Yuma Area):					
Zone A					
Electricians	11.88	5.25%	3%+8.35%		1%
Cable Splicers	12.13	5.25%	3%+8.35%		1%
Zone B					
Electricians	12.58	5.25%	3%+8.35%		1%
Cable Splicers	12.83	5.25%	3%+8.35%		1%
Zone C					
Electricians	13.18	5.25%	3%+8.35%		1%
Cable Splicers	13.43	5.25%	3%+8.35%		1%
Zone D					
Electricians	13.88	5.25%	3%+8.35%		1%
Cable Splicers	14.13	5.25%	3%+8.35%		1%

	Basic Hourly Rates	Fringe Benefits Payments			
		H & W	Pensions	Vacation	Education and/or Appr. Tr.
DECISION NO. AZ77-5058 - Mod. #5					
(42 FR 31656 - June 17, 1977)					
Statewide, Arizona					
Change:					
Bricklayers; Stonemasons (Phoenix Area):					
Zone A	$10.88	.65	.90		.09
Zone B	11.75	.65	.90		.09
Zone C	12.29	.65	.90		.09
Zone D	12.84	.65	.90		.09
Zone E	13.27	.65	.90		.09
Zone F	14.14	.65	.90		.09
Electricians (Pheonix, Kingman and Prescott Areas):					
Zone A	12.78	.96	3%+.88		3/4%
Zone B	15.02	.96	3%+.88		3/4%
Zone C	16.17	.96	3%+.88		3/4%
Elevator Constructors	11.775	.745	.56	a	.025
Elevator Constructors' Helpers	70%JR	.745	.56	a	.025
Painters (Phoenix Area):					
Zone A					
Steel and bridge, brush	10.93	.59	.38		.05
Steel and bridge, spray	11.13	.59	.38		.05
Zone B					
Steel and bridge, brush	11.93	.59	.38		.05
Steel and bridge, spray	12.13	.59	.38		.05
Zone C					
Brush	11.94	.59	.38		.05
Spray	12.19	.59	.38		.05
Steel and bridge, brush	13.18	.59	.38		.05
Steel and bridge, spray	13.38	.59	.38		.05
Footnote: a. Employer contributes 8% of basic hourly rates for over 5 years' service, and 6% of basic hourly rate for 6 months to 5 years as Vacation Pay Credit. Six Paid Holidays. A through F					

DECISION NO. AZ77-5058 - Mod. #6 (42 FR 31056 - June 17, 1977) Statewide, Arizona	Basic Hourly Rates	Fringe Benefits Payments			
		H & W	Pensions	Vacation	Education and/or Appr. Tr.
Change:					
Painters (Phoenix Area):					
Zone A					
Brush	$9.85	.60	.40		.08
Spray	10.10	.60	.40		.08
Steel and bridge, brush	10.93	.60	.40		.08
Steel and bridge, spray	11.13	.60	.40		.08
Zone B					
Brush	10.85	.60	.40		.08
Spray	11.10	.60	.40		.08
Steel and bridge, brush	11.93	.60	.40		.08
Steel and bridge, spray	12.13	.60	.40		.08
Zone C					
Brush	12.10	.60	.40		.08
Spray	12.35	.60	.40		.08
Steel and bridge, brush	13.18	.60	.40		.08
Steel and bridge, spray	13.38	.60	.40		.08
Plumbers; Steamfitters:					
Zone I	12.24	.75	1.35		.10
Zone II	12.59	.75	1.35		.10
Zone III	13.01	.75	1.35		.10
Zone IV	14.31	.75	1.35		.10
Sheet Metal Workers:					
Flagstaff, Kingman and Phoenix Area:					
Zone I	10.83	3%+.80	1.30		.10
Zone II	11.48	3%+.80	1.30		.10
Zone III	13.33	3%+.80	1.30		.10
Soft Floor Layers: (Phoenix Area)					
Zone A	9.21	.59	.12		.12
Zone B	10.21	.59	.12		.12
Zone C	10.71	.59	.12		.12

Mod. 6

Decision No. AZ77-5058 (Cont'd)	Basic Hourly Rates	Fringe Benefits Payments			
		H & W	Pensions	Vacation	Education and/or Appr. Tr.
Line Construction:					
Zone I					
Groundmen	9.97	8%	3%+7%		1/2%
Equipment Operators; Powdermen; Mechanics	11.47	8%	3%+7%		1/2%
Linemen; Technicians; Crane Operators; Linemen Welders	12.90	8%	3%+7%		1/2%
Cable Splicers	13.30	8%	3%+7%		1/2%
Zone I-A					
Groundmen	10.81	8%	3%+7%		1/2%
Equipment Operators; Powdermen; Mechanics	12.24	8%	3%+7%		1/2%
Linemen; Technicians; Crane Operators; Linemen Welder	$13.72	8%	3%+7%		1/2%
Cable Splicers	14.20	8%	3%+7%		1/2%
Zone II					
Groundmen	11.59	8%	3%+7%		1/2%
Equipment Operators; Powdermen; Mechanics	13.03	8%	3%+7%		1/2%
Linemen; Technicians; Crane Operators; Linemen Welder	14.52	8%	3%+7%		1/2%
Cable Splicers	14.95	8%	3%+7%		1/2%

RW-16

DECISION #AZ77-5058 - Mod. #7
(42 FR 31056 - June 17, 1977)
Statewide, Arizona

Change:
Boilermakers

Basic Hourly Rates	Fringe Benefits Payments			
	H & W	Pensions	Vacation	Education and/or Appr. Tr.
$13.625	$1.075	$1.00	.75	.02

Reference
DACW09-78-B-0011

SPECIFICATIONS

for

INDIAN BEND WASH

INDIAN SCHOOL PARK

AND

GREENBELT TRAIL SYSTEM

MARICOPA COUNTY, ARIZONA

Gila River Basin, Arizona

Appropriation: 96x3122 Construction General
Corps of Engineers, Civil

96x8862 Contributed Funds, Other

U S Army Engineer District
Los Angeles
Corps of Engineers

TABLE OF CONTENTS

PART I SPECIAL PROVISIONS

PART II TECHNICAL PROVISIONS

Section	Title
1A	General Requirements
1B	Measurement and Payment
1D	Environmental Protection
2A	Diversion and Control of Water
2C	Water Lines
2D	Irrigation System
2E	Sewers; Sanitary, Gravity
2F	Detours and Traffic Control Facilities
2H	Pumps; Water, Vertical Turbine
2I	Irrigation Pump Station
3A	Earthwork
3B	Excavation, Filling, and Backfilling for Buildings
3C	Excavation, Trenching and Backfilling for Utilities Systems
3D	Lake Lining
3E	Polyvinyl Chloride (PVC) Plastic Lining
4C	Concrete for Street Bridges
4H	Grouting Stone Protection
4J	Concrete
4K	Reinforced Masonry
4L	Concrete Sidewalks and Curbs
4N	Bituminous Waterproofing
5D	Stone Protection
6A	Miscellaneous Metal
6B	Structural Steel
6C	Casework
6D	Fences
8A	Storm-Drainage System
9A	Aggregate Base (ARIZONA)
9B	Painting, General
9C	Miscellaneous Aggregates
9D	Prime Coat
9E	Tack Coat
9G	Asphalt Concrete (Central-Plant Hot Mix)

TABLE OF CONTENTS
(Continued)

Section	Title
9H	Playing Surfaces for Outdoor Sports Facilities
9I	Precast Concrete Floor (Handball Courts)
9L	Pavement Markings
10A	Turf
10B	Trees, Shrubs, Ground Covers, and Vines
11K	Miscellaneous Items of Work
12A	Prefabricated Metal Building
14A	Rough Carpentry
14B	Finish Carpentry
14C	Aluminum Doors and Frames
14D	Wood Doors
14E	Steel Doors and Frames
14F	Resilient Flooring
14G	Gypsum Wallboard (Drywall)
14H	Acoustical Treatment
14I	Calking and Sealants
14J	Glass and Glazing
14K	Tile; Ceramic
14L	Metal Toilet Partitions
14M	Hardware; Builders'
14N	Toilet Accessories
14O	Plumbing, General Purpose
14R	Built-Up Roofing
14T	Sheet Metal Work, General
14W	Roofing, Strip Shingles
14X	Furring (Metal), Lathing, and Plastering
15A	Solar Energy System
15C	Thermal Insulation for Mechanical Systems
15G	Ventilating System, Mechanical
15H	Air Conditioning System (Unitary Type)
16A	Electrical Work, Interior
16B	Electrical - Distribution and Park - Lighting System; Underground
16C	Fire Detection and Alarm System

PART I

SPECIAL PROVISIONS

Index

1. Commencement, Prosecution, and Completion of Work
2. Liquidated Damages
3. Contract Drawings, Maps and Specifications
4. Contractor Submittals
5. Physical Data
6. Salvage Materials and Equipment
7. Layout of Work
8. Quantity Surveys
9. Damage to Work
10. Performance of Work by Contractor
11. Contractor Quality Control
12. Progress Schedule
13. Time Extension

1. COMMENCEMENT, PROSECUTION, AND COMPLETION OF WORK. The Contractor will be required to commence work under this contract within 5 calendar days after the date of receipt by him of notice to proceed, to prosecute said work diligently, and to complete the entire work ready for use not later than dates scheduled below. Seeding and planting shall be accomplished as soon as practicable and within time limits stated in the Technical Provisions or directed by the Contracting Officer. The time stated for completion shall include final clean-up of the premises.

1.1 Completion Schedule.

Description	Completion Date
Parking Lot "A".	28 July 1978
Rough grading for future shower and locker facility.	28 July 1978
Water and sewer lines to a point 5 feet outside the future shower and locker facility limits.	28 July 1978
Complete the remaining work.	12 January 1978

1.2 The foregoing completion dates are based on the assumption that the successful bidder will receive the notice to proceed by 26 May 1978 The Government will extend the completion date by the number of calendar days after the above date that the Contractor receives the notice to proceed, except to the extent that the delay in issuance of the notice to proceed results from the failure of the Contractor to execute the contract and give the required performance and payment bonds within the time specified in the bid. (1968 APR)

2. LIQUIDATED DAMAGES (1965 JAN). In case of failure on the part of the Contractor to complete the work within the time fixed in the contract or any extensions thereof, the Contractor shall pay the Government as liquidated damages, pursuant to the clause of this contract entitled "Terminations for Default-Damages for Delay-Time Extensions," the following sums separately for each day of delay.

2.1 Complete parking Lot "A" as specified in subparagraph 1.1, $140.00.

2.2 Complete rough grading for future shower and locker facility as specified in subparagraph 1.1, $140.00.

2.3 Complete water and sewerlines to a point 5 feet outside the future shower and locker facility limits as specified in subparagraph 1.1, $140.00.

2.4 Complete the remaining work, including clean up as specified in subparagraph 1.1, $140.00.

3. CONTRACT DRAWINGS, MAPS AND SPECIFICATIONS. (1965 JAN.).

3.1 Ten sets of large scale contract drawings, maps and specifications will be furnished the Contractor without charge, except for applicable publications incorporated into the Technical Provisions by reference. Additional sets will be furnished on request at the cost of reproduction. The work shall conform to the following contract drawings and maps, all of which form a part of these specifications and are available in the office of the U. S. Army Engineer District, Los Angeles, 300 North Los Angeles Street, Los Angeles, California.

Drawing No. (District File No.)	Title
246/1	Title-Cover Sheet
246/2	Vicinity Maps and Haul Site Maps
246/3	Sheet Index
246/4	Soil Boring Log - Foundation Investigation
246/5	Topo Map and Boundary Survey
246/6	Hayden Rd. and Quadrant Sheet Index
246/7	Horizontal Control-NE Quadrant
246/8	Horizontal Control-SE Quadrant
246/9	Horizontal Control-SW Quadrant
246/10	Horizontal Control-NW Quadrant
246/11	Site Finish Grading-NE Quadrant
246/12	Site Finish Grading-SE Quadrant
246/13	Site Finish Grading-SW Quadrant
246/14	Site Finish Grading-NW Quadrant
246/15	Site Cross-Sections
246/16	Site Grading Details
246/17	Plan and Profile-Hayden Rd. Station 0+00 to Station 5+00
246/18	Plan and Profile-Hayden Rd. Station 5+00 to Station 10+50
246/19	Plan and Profile-Hayden Rd. Station 10+50 to Station 17+00
246/20	Plan and Profile-Hayden Rd. Station 17+00 to Station 22+50
246/21	Plan and Profile-Hayden Rd. Station 22+50 to Station 27+35 .91
246/22	Hayden Rd-Sections and Details
246/23	Parking Area Layouts
246/24	Water, Sewer and Storm Drain Layout-Master Plan
246/25	Water, Sewer and Storm Drain Layout-NE Quadrant
246/26	Water, Sewer and Storm Drain Layout-SE Quadrant
246/27	Water, Sewer and Storm Drain Layout-SW Quadrant
246/28	Water, Sewer and Storm Drain Layout-NW Quadrant
246/29	General Utilities Profiles and Details
246/30	General Utilities Profiles and Details
246/31	Irrigation System Pumping Station
246/32	Pedestrian Underpass Plan, Section and Elevation
246/33	Pedestrian Underpass Plan and Sections, Wingwall Plans and Details
246/34	Pedestrian Underpass Sections and Details Guard Rail Plans and Details
246/35	Landscape Plan-NE Quadrant
246/36	Landscape Plan-SE Quadrant
246/37	Landscape Plan-SW Quadrant
246/38	Landscape Plan-NW Quadrant
246/39	Landscape Plan-Visitor Center
246/40	Group Picnic Areas-Landscape Plan
246/41	Sitting Areas-Landscape Plan
246/42	Service Yard Layout Plan
246/43	Plazas-Landscape Plan
246/44	Tot Lot Plan
246/45	Tot Lot Details
246/46	Sports Facilities Layout
246/47	Sport Facilities Details-Tennis, Croquet, Horseshoes Shuffleboard and Volleyball
246/48	Basketball Details-Layout, Backstop and Posts
246/49	Multipurpose Field Layout
246/50	Handball Courts; Wallpanels, Floor, Foundation and Roof Layouts and Reinforcing
246/51	Handball Construction Sections and Details

246/52	Ramada-Plans, Elevations and Details
246/53	Walls-Retaining Seat Cheek and Rip-Rap
246/54	Curbs, Steps and Ramps-Details
246/55	Paving Details
246/56	Fencing Details
246/57	Planting Plan-NE Quadrant
246/58	Planting Plan-SE Quadrant
246/59	Planting Plan-SW Quadrant
246/60	Planting Plan-NW Quadrant
246/61	Planting Plan-Visitor Center
246/62	Planting Details and Schedule
246/63	Irrigation Plan-NE Quadrant
246/64	Irrigation Plan-SE Quadrant
246/65	Irrigation Plan-SW Quadrant
246/66	Irrigation Plan-NW Quadrant
246/67	Irrigation Plan-Visitor Center
246/68	Irrigation Details
246/69	Site Graphics-Park Identification, Building Identification, Park Directory Plans, Elevations Sections and Details
246/70	Site Graphics-Park Identification, Building Identification, Restrooms, Templates Elevations and Schedules
246/71	Site Graphics-Park Directory Layout
246/72	Site Furniture: Kiosk, Bollard; Bike Rack, Drinking Fountain, Kiosk-Plans, Sections and Details
246/73	Floor Plan-Visitor Center
246/74	Floor Plan-Park Control
246/75	Elevations-Visitor Center
246/76	Elevations-Visitor Center/Park Control
246/77	Elevations-Park Control
246/78	Building Sections-Park Control
246/79	Building Sections & Eave Details
246/80	Building Sections & Details-Visitor Center
246/81	Interior Elevations-Visitor Center
246/82	Interior Elevations-Park Control
246/83	Finish Schedules & Door Types
246/84	Carpet, Door & Ceramic Tile Details
246/85	Roof Plan & Roof Details
246/86	Foundation Plan-Visitor Center
246/87	Foundation Plan-Park Control
246/88	Roof Framing Plan-Visitor Center
246/89	Roof Framing Plan-Park Control
246/90	Typical Details
246/91	Foundation Details
246/92	Roof Framing Details
246/93	Roof Framing Details
246/94	Roof Framing Details
246/95	Air Conditioning Floorplan-Visitor Center
246/96	Air Conditioning Floorplan-Park Control
246/97	Solar Plan-Roof
246/98	Solar Diagrams and Solar Heating Schematic
246/99	Mechanical Details
246/100	Mechanical Details
246/101	Plumbing Plan-Visitor Center
246/102	Plumbing Diagrams-Park Control
246/103	Plumbing Details & Schedules
246/104	Electrical Legend and General Notes-Electrical Plan
246/105	Electrical Utility Plan
246/106	Park and Sport Lighting Plan-NE Quadrant
246/107	Park and Sport Lighting Plan-SE Quadrant
246/108	Park and Sport Lignting Plan-SW Quadrant
246/109	Lighting-Typical Layout and Foundation Detail-Basketball-Shuffleboard, Horseshoes, Croquet, Tennis, Volleyball Court
246/110	Lighting-Typical Layout and Foundation Multipurpose Field and Handball Court

246/111	Lighting Standards and Details
246/112	Distribution Single Line Diagrams and Details
246/113	Circuit Schedule and Switchboard Details
246/114	Control and One Line Diagrams and Circuit Schedule
246/115	Lighting Plan-Visitor Center
246/116	Lighting Plan-Park Control
246/117	Power Plan-Visitor Center
246/118	Power Plan-Park Control
246/119	Lighting and Power Pumping Station and Pedestrian Underpass and Fixture Schedule
246/120	Control Diagram and Schedule
246/121	Greenbelt Trail System Part I Riding and Hiking Trail Jackrabbit Road to Chapparal Road Sta. 0+00 to Sta. 1420+00 ±
246/122	Greenbelt Trail System Part I Riding and Hiking Trail Jackrabbit Road to Chapparal Road Sta. 1420+00 Sta. 3340+00 ±
246/123	Greenbelt Trail System Part I Riding and Hiking Trail Jackrabbit Road to Chapparal Road Details

3.2 Omissions from the drawings or specifications or the misdescription of details of work which are manifestly necessary to carry out the intent of the drawings and specifications, or which are customarily performed, shall not relieve the Contractor from performing such omitted or misdescribed details of the work but they shall be performed as if fully and correctly set forth and described in the drawings and specifications.

3.3 The Contractor shall check all drawings furnished him immediately upon their receipt and shall promptly notify the Contracting Officer of any discrepancies. Figures marked on drawings shall in general be followed in preference to scale measurements. Large scale drawings shall in general govern small scale drawings. The Contractor shall compare all drawings and verify the figures before laying out the work and will be responsible for any errors which might have been avoided thereby.

4. CONTRACTOR SUBMITTALS.

4.1 General. Reference is made to the General Provision entitled Shop Drawings. The Contractor shall submit for approval all shop drawings, certificates of compliance and/or equipment lists called for under the various headings of these specifications. These drawings, certificates and lists shall be complete and detailed. If approved by the Contracting Officer, each copy of the drawings, certificates, or lists will be identified as having received such approval by being so stamped and dated. The Contractor shall make any corrections required by the Contracting Officer. Unless otherwise specified in the Technical Provisions, the number of copies to be submitted shall be as stated herein. The Contractor shall complete ENG Form 4025, "Transmittal of Shop Drawings, Equipment Data, Material Samples, or Manufacturer's Certificates of Compliance for Approval" and forward copies of same with each set of shop drawings, certificates of compliance, or equipment lists submitted. Blank ENG Forms 4025 will be furnished by the Contracting Officer on request. Each shop drawing submitted for approval shall have, in the lower right hand corner just above the title, a white space 3 inches x 4 inches in which the Contracting Officer can indicate the action taken. Shop drawings for submittal shall be either blue line or black line prints on a white background. Blueprints are not acceptable. Each shop drawing, certificate of compliance, and/or equipment list shall be identified with the following information as applicable:

Contract Number
Project Title and Location
Subcontractor's Name
Supplier's Name
Manufacturer's Name
Contract Specification and Paragraph Number
Contract Drawing File Number

4.1.1 Contractor Certification. Each submittal of the shop drawings shall contain the following certification on the face of the ENG Form 4025 accompanying the submittal:

"I have reviewed the shop drawings in detail
and they are correct and in strict conformance
with the contract drawings and specifications
except as otherwise explicitly stated.

Authorized Prime Contractor Representative"

4.2 Shop Drawings and Materials Submittal Register. Within 15 calendar days after commencement of work under this contract, the Contractor shall submit a preliminary register showing all shop drawings, certificates of compliance, equipment lists, samples, and other data required to be submitted under the various headings of these specifications. The register shall be submitted in duplicate. The preliminary register shall show the submittal identification number, the type of submittal, and the description for all items to be submitted under this contract and, for all items needed prior to submittal of the Project Progress Schedule, the scheduled submittal date, approval need date, and the material/equipment need date shall also be included. The register shall be expanded to include all Contractor scheduled dates and shall be resubmitted within 15 calendar days after submittal of the project progress schedule. After original approval the register shall be updated to indicate actual dates, actions completed, and any additional submittals or resubmittals required, and two copies of all updated sheets shall be submitted on or before the fifteenth of each month. The register shall provide adequate time for review and approval of the submitted material and shall be coordinated with the construction progress schedule to assure that all equipment and materials will be available for incorporation into the work in accordance with approved schedule of construction operations. Payment for materials incorporated into the work will not be allowed until required approvals have been obtained.

4.3 Shop Drawings. The Contractor shall submit to the Contracting Officer for approval 8 copies of all shop drawings as called for under the various headings of these specifications.

Sets of all shop drawings will be retained by the Contracting Officer and one set will be returned to the Contractor.

4.4 Certificates of Compliance. (1969 MAY OCE) Any certificates required for demonstrating proof of compliance of materials with specification requirements shall be executed in 6 copies. Each certificate shall be signed by an authorized officer of the manufacturing company and shall contain the name and address of the Contractor, the project name and location, and the quantity and date or dates of shipment or delivery to which the certificates apply. Copies of laboratory test reports submitted with certificates shall contain the name and address of the testing laboratory and the date or dates of the tests to which the report applies. Certification shall not be construed as relieving the Contractor from furnishing satisfactory material, if, after tests are performed on selected samples, the material is found not to meet the specific requirements.

4.5 Resubmittals. If a submittal is returned for correction or is not satisfactory and is disapproved by the Contracting Officer, the Contractor shall resubmit the corrected material in the same quantity, as specified for the original submittal, for approval within 14 calendar days after receipt by him of the disapproved material.

5. PHYSICAL DATA. (1965 JAN.).

5.1 General. Information and data furnished or referred to below are furnished for the Contractor's information. However, it is expressly understood that the Government will not be responsible for any interpretation or conclusion drawn therefrom by the Contractor.

5.2 The physical conditions indicated on the drawings and in the specifications are the result of site investigations by

5.3 Weather Conditions. Meteorological information including rainfall and temperature data are available for inspection in the office of the District Engineer at 300 North Los Angeles Street, Los Angeles, California. Temperature statistics based on the National Weather Service Phoenix, Arizona Sky Harbor International Airport weather station are as follows:

TEMPERATURE DATA (IN DEGREES FAHRENHEIT)

Month	Average Daily Maximum*	Average Daily Minimum*	Average*	Maximum**	Minimum**
January	65	38	52	88	16
February	69	42	56	89	22
March	75	46	61	97	25
April	83	53	68	104	32
May	92	60	76	113	40
June	102	69	85	117	50
July	104	78	91	118	61
August	102	76	89	117	60
September	98	69	84	118	47
October	87	57	72	105	34
November	75	45	60	92	25
December	66	39	52	88	22

* Taken from Local Climatological Data – Annual Summary for Phoenix 1974.
** Taken from Local Climatological Data – Annual Summary for Phoenix 1974 and from Climatology of the United States No. 80-2 supplement for 1951-1960.

5.3.1 Streamflow Conditions. Discharge frequency and flood hydrograph information are available for inspection in the office of the District Engineer at 300 North Los Angeles Street, Los Angeles, California.

5.4 Transportation Facilities. The Southern Pacific Company serves the area adjacent to the site of the work. The Contractor shall investigate the availability of sidings and shall make all arrangements with the railroad company for any siding, spurs, or other facilities necessary for the delivery of materials to be used on the work. The Contractor shall make his own investigation of the condition of available public and private roads and of clearances, restrictions, bridge load limits, and other limitations affecting transportation and ingress and egress at the site of the work. It shall be the Contractor's responsibility to construct and maintain at his own expense, any haul roads required for construction operations.

5.5 Additional Information, including but not necessarily limited to, results of laboratory tests of material encountered in test holes or other explorations and field logs is available for inspection and study in the office of the District Engineer at

6. SALVAGE MATERIALS AND EQUIPMENT. (1965 JAN.). The Contractor shall maintain adequate property control records for all materials or equipment specified to be salvaged. These records may be in accordance with the Contractor's system of property control, if approved by the property administrator. The Contractor shall be responsible for the adequate storage and protection of all salvaged materials and equipment and shall replace, at no cost to the Government, all salvaged materials and equipment which are broken or damaged during salvage operations as the result of his negligence, or while in his care.

7. LAYOUT OF WORK. (1965 APR OCE)

7.1 The Government will establish the control points and bench marks indicated at the site of the work.

a. Necessary additional information relating to lines and grades will be made available to the Contractor.

7.2 From the base lines and bench marks established by the Government, the Contractor shall complete the layout of the work and shall be responsible for all measurements that may be required for the execution of the work to the location and limit marks prescribed in the specifications or on the contract drawings, subject to such modifications as the Contracting Officer may require to meet changed conditions or as a result of necessary modifications to the contract work.

7.3 The Contractor shall furnish, at his own expense, such stakes, templates, platforms, equipment, tools and materials, and all labor as may be required in laying out any part of the work from the base lines and bench marks established by the Government. It shall be the responsibility of the Contractor to maintain and preserve all stakes and other marks established by the Contracting Officer until authorized to remove them, and if such marks are destroyed, by the Contractor or through his negligence prior to their authorized removal they may be replaced by the Contracting Officer, at his discretion, and the expense of replacement will be deducted from any amounts due or to become due the Contractor. The Contracting Officer may require that work be suspended at any time when location and limit marks established by the Contractor are not reasonably adequate to permit checking of the work.

8. QUANTITY SURVEYS (1968 APR.)

8.1 The Contractor shall make such surveys and computations as are necessary to determine the quantities of work performed or placed during each period for which a progress payment is to be made. The Contractor shall also make original and final surveys. The Government will make such computations as are necessary to determine the quantities of work performed or finally in place. Unless waived by the Contracting Officer in each specific case, quantity surveys made by the Contractor shall be made under the direction of a representative of the Contracting Officer.

8.2 All original field notes, computations and other records of the Contractor for the purposes of layout, original, progress and final surveys shall be recorded in duplicating field books, the original pages of which shall be furnished promptly in ring binders to the representative of the Contracting Officer at the site of the work and shall be used by the Contracting Officer to the extent necessary in determining the proper amounts of progress and final payments.

9. DAMAGE TO WORK. (1966 MAR OCE) The responsibility for damage to any part of the permanent work shall be as set forth in the clause of the contract entitled "Permits and Responsibilities." However, if, in the judgment of the Contracting Officer, any part of the permanent work performed by the Contractor is damaged by flood or earthquake, which damage is not due to the failure of the Contractor to take reasonable precautions or to exercise sound engineering and construction practices in the conduct of the work, the Contractor will make the repairs as ordered by the Contracting Officer and full compensation for such repairs will be made at the applicable contract unit or lump sum prices as fixed and established in the contract. If, in the opinion of the Contracting Officer, there are no contract unit or lump sum prices applicable to any part of such work an equitable adjustment pursuant to Clause 3, Changes, of the contract, will be made as full compensation for the repairs of that part of the permanent work for which there are no applicable contract unit or lump sum prices. Except as herein provided, damage to all work (including temporary construction), utilities, materials, equipment and plant shall be repaired to the satisfaction of the Contracting Officer at the Contractor's expense, regardless of the cause of such damage.

10. PERFORMANCE OF WORK BY CONTRACTOR. (1965 JAN.). The Contractor shall perform on the site, and with his own organization, work equivalent to at least 35 percent of the total amount of work to be performed under the contract. If during the progress of the work hereunder the Contractor requests a reduction in such percentage, and the Contracting Officer determines that it would be to the Government's advantage, the percentage of the work required to be performed by the Contractor may be reduced; provided, written approval of such reduction is obtained by the Contractor from the Contracting Officer.

11. CONTRACTOR QUALITY CONTROL. The Contractor shall provide and maintain an effective quality control program that complies with General Provision 41 of the contract entitled "Contractor Inspection System."

11.1 The Contractor shall establish a quality control system to perform sufficient inspection and tests of all items of work, including that of his subcontractors, to ensure conformance to applicable specifications and drawings with respect to the materials, workmanship, construction, finish, functional performance, and identification. This control will be established for all construction except where the Technical Provisions of the contract provide for specific Government control by inspections, tests or other means. The Contractor's control system will specifically include the surveillance and tests required in the Technical Provisions of the contract specifications.

11.2 The Contractor's quality control system is the means by which he assures himself that his construction complies with the requirements of the contract plans and specifications. The controls shall be adequate to cover all construction operations and should be keyed to the proposed construction sequence.

11.3 The Contractor's job supervisory staff may be used for quality control, supplemented as necessary by additional personnel for surveillance, special technicians, or testing facilities to provide capability for the controls required by the Technical Provisions of the specifications. Prior approval is required for facilities, equipment, and personnel used by the Contractor in performing the specified tests

11.4 After the contract is awarded and before construction operations are started, the Contractor shall meet with the Contracting Officer, or his representative, and discuss quality control requirements. The meeting shall develop mutual understanding relative to details of the system, including the forms to be used for recording the quality control operations, inspections, administration of the system, and the interrelationship of Contractor and Government inspection.

11.5 The Contractor shall submit for approval within 14 days after the receipt of the Notice to Proceed a quality control plan which shall include the procedures, instructions, and reports to be used. This document will include as a minimum:

(1) The quality control organization.

(2) Number and qualifications of personnel to be used for this purpose.

(3) Authority and responsibilities of quality control personnel.

(4) Methods of quality control including that for his subcontractor's work.

(5) Test methods including, as specified, name of qualified testing laboratory to be used.

(6) Method of documenting quality control operation, inspection, and testing.

(7) A copy of a letter of direction to the Contractor's representative responsible for the quality control, outlining his duties and responsibilities, and signed by a responsible officer of the firm.

11.6 Unless specifically authorized in writing no construction shall be started until the Contractor's quality control plan is approved.

11.7 All compliance inspection will be recorded on an approved form, including but not limited to the specific items required in the Technical Sections of the specifications. This form, to include records of corrective action taken, will be furnished to the Government as required by the Contracting Officer.

11.8 If recurring deficiencies in an item or items indicate that the quality control system is not adequate, such corrective actions will be taken as directed by the Contracting Officer.

11.9 In the event the Contractor fails to satisfactorily perform any required inspections and tests; to submit timely, complete, and factual reports and test data; or otherwise comply with the quality control provisions, the Contracting Officer may provide these services from another source and all costs for providing these services will be deducted from payments due the Contractor.

12. PROGRESS SCHEDULE.

12.1 Reference is made to the General Provision entitled "Progress Charts and Requirements for Overtime Work."

12.2 The Progress schedule shall provide for a uniform rate of progress throughout the entire construction period. Actual progress shall be entered on the schedule weekly. The determination of whether or not the work is behind schedule will be based upon a uniform rate of production in each feature of the work. Falling more than 5 calendar days behind the approved progress schedule in any feature of the work shall constitute sufficient grounds for a determination that the Contractor has fallen behind the progress schedule. Failure of the Contracting Officer to act under this provision shall in no way relieve the Contractor of the responsibility for completion of the work on schedule.

13. TIME EXTENSION. (1965 JAN.). Notwithstanding any other provisions of this contract it is mutually understood that the time extensions for changes in the work depend upon the extent, if any, by which the changes cause delay in the completion of the various elements of construction. The change order granting the time extension may provide that the contract completion date will be extended only for those specific elements so delayed and that the remaining contract completion dates for all other portions of the work will not be altered and may further provide for an equitable readjustment of liquidated damages pursuant to the new completion schedule.

* * * * *

PART II

TECHNICAL PROVISIONS

SECTION 1 A

GENERAL REQUIREMENTS

Index

1. Applicable Publications
2. Project Facilities
3. Construction Signs
4. Bulletin Board
5. Maintenance and Disposal of Project Facilities
6. Scrap Materials
7. Salvage Materials
8. Archaeological Findings During Construction
9. Public Utilities, Notices, and Restrictions
10. Public Safety
11. Personal Clothing Standards
12. Occupational Safety and Health Act (OSHA) Standards
13. Quality Control

1. APPLICABLE PUBLICATIONS. The following publications of the issues listed below, but referred to thereafter by basic designation only, form a part of this specification to the extent indicated by the references thereto.

1.1 Federal Specifications.

FF-B-575C	Bolts, Hexagon and Square
FF-N-105B & Am-3	Nails, Brads, Staples and Spikes: Wire, Cut and Wrought
FF-N-836D & Am-1	Nut: Square, Hexagon, Cap, Slotted, Castle, Knurled, Welding, and Single Ball Seat
MM-L-751H	Lumber; Softwood
TT-E-529C & Am-1	Enamel, Alkyd, Semi-Gloss
TT-P-25E & Am-1	Primer Coating, Exterior (Undercoat for Wood, Ready-Mixed, White and Tints)

1.2 U.S. Department of Commerce National Bureau of Standards, Product Standard.

PS 1-74	Construction and Industrial Plywood

2. PROJECT FACILITIES. The Contractor shall construct and/or erect the following project facilities.

2.1 Construction Signs. The signs shall be erected as soon as possible and within 15 days after commencement of work under this contract.

2.1.1 One Project Sign at location designated by the Contracting Officer.

2.1.2 Warning Signs facing approaching traffic on all haul roads crossing under overhead power transmission lines.

2.1.3 Six hard hat signs at locations directed.

2.2 Bulletin Board at the Contractor's office.

2.3 Sanitary Facilities.

3. CONSTRUCTION SIGNS.

3.1 Materials.

3.1.1 Lumber shall conform to Federal Specification MM-L-751, and shall be seasoned Douglas Fir, S4S, Grade D or better except that posts, braces and spacers shall be construction Grade (WCLB).

3.1.2 Plywood shall conform to Product Standard PS 1, grade A-C, Group 1, exterior type.

3.1.3 Bolts, Nuts and Nails. Bolts shall conform to Federal Specification FF-B-575, nuts shall conform to Federal Specification FF-N-836, and nails shall conform to Federal Specification FF-N-105.

3.1.4 Paints and Oils. Paints shall conform to Federal Specifications TT-P-25 for primer and TT-E-529 for finish paint and lettering.

3.2 Construction.

3.2.1 Project and hard hat signs shall be constructed as detailed on Figures 1, 1A, 2 and 3. Decals and safety signs will be furnished by the Contracting Officer.

3.2.2 Warning Signs shall be constructed of plywood not less than 1/2 inch thick and shall be securely bolted to the supports with the bottom of the sign face 3 feet above the ground. The sign face shall be 2 x 4 feet, all letters shall be 4 inches in height, and the wording shall be "WARNING: OVERHEAD TRANSMISSION LINES."

3.3 Painting. All exposed surfaces and edges of plywood shall be given one coat of linseed oil and be wiped prior to applying primer. All exposed surfaces of signs and supports shall be given one coat of primer and 2 finish coats of white paint. Except as otherwise indicated, lettering on all signs shall be black and sized as indicated.

4. BULLETIN BOARD. A weatherproof bulletin board, approximately 36 inches wide and 30 inches high, with hinged glass door shall be provided adjacent to or mounted on the Contractor's project office. If adjacent to the office, the bulletin board shall be securely mounted on no less than 2 posts. Bulletin board and posts shall be painted or have other approved factory finish. The bulletin board shall be easily accessible at all times and shall contain wage rates, equal opportunity notice, and such other items required to be posted.

5. MAINTENANCE AND DISPOSAL OF PROJECT FACILITIES. The Contractor shall maintain the project facilities in good condition throughout the life of the project. Upon completion of work under this contract, the facilities covered under this section will remain the property of the Contractor and shall be removed from the site at his expense.

6. SCRAP MATERIAL. Materials indicated to be removed and not indicated to be salvaged, stored or reinstalled are designated as scrap and shall become the property of the Contractor and be removed from the site of the work. The Contractor by signing this contract hereby acknowledges that he made due allowance for value, if any, of such scrap in the contract price.

7. SALVAGE MATERIALS. All materials and/or equipment removed and indicated to be either stored or reinstalled are designated as salvaged materials and/or equipment. Any salvaged materials and equipment which are excess upon completion of the work and are not indicated to be stored shall become the property of the Contractor.

8. ARCHAEOLOGICAL FINDINGS DURING CONSTRUCTION. There are no known archaeological remains at the project site. Should any skeletons, artifacts, or other archaeological remains be uncovered, the Contractor shall suspend operations at the site of discovery and continue operations in other areas. The Contractor shall notify the Project Engineer immediately of the findings. Included with the notifications shall be a brief statement to the Contracting Officer of the location and the findings. Should the discovery site require archaeological studies resulting in delays and/or additional work, the Contractor will be compensated by an equitable adjustment under the General Provisions of the contract.

9. PUBLIC UTILITIES, NOTICES, AND RESTRICTIONS.

9.1 General. The approximate location of all railroads, pipe lines, power and communication lines, and other utilities known to exist within the limits of the work are indicated on the drawings. The sizes, locations, and names of owners of such utilities are given from available information, but their accuracy is not guaranteed. Except as otherwise indicated on the drawings, all existing utilities will be left in place and the Contractor shall conduct his operations in such a manner that the utilities will be protected from damage at all times, or arrangements shall be made by the Contractor for their relocation at the Contractor's own expense. The Contractor shall be responsible for any damage to utilities known to exist and shall reimburse the owners for such damage caused by his operations.

9.2 Relocation or Removal. Utilities to be relocated or removed not as part of this contract are designated "To be Relocated by Others" or "To be Removed by Others," respectively. Utilities shown on the plans and not so designated will be left in place and be subject to the provisions of the clause: PROTECTION OF EXISTING VEGETATION, STRUCTURES, UTILITIES, AND IMPROVEMENTS of the General Provisions. The Contractor may make arrangements with the owner for the temporary relocation and restoration of utilities not designated to be relocated, or for additional work in excess of the work needed to relocate utilities designated for relocation at no additional cost to the Government.

9.3 Utilities Not Shown. If the Contractor encounters, within the construction limits of the entire project, utilities not shown on the plans and not visible as of the date of this contract and if such utilities will interfere with construction operations, he shall immediately notify the Contracting Officer in writing to enable a determination by the Contracting Officer as to the necessity for removal or relocation. If such utilities are left in place, removed or relocated, as directed by the Contracting Officer, the Contractor shall be entitled to an equitable adjustment for any additional work or delay.

9.4 Coordination. The Contractor shall consult and cooperate with the owner of utilities that are to be relocated or removed by others to establish a mutual performance schedule and to enable coordination of such work with the construction work. These consultations shall be held as soon as possible after award of the contract or sufficiently in advance of anticipated interference with construction operations to provide required time for the removal or relocation of affected utilities.

9.5 Service Connections. The Contractor shall make all necessary arrangements with the applicable utility companies for installation of meters and connection of the utilities and shall pay all costs in connection therewith, including all costs for service until final acceptance of the project. The utility owners and their representatives are as listed below.

City of Scottsdale
Utility Billing
3939 Civic Center Plaza
Scottsdale, Arizona 85251
Attention: Louise Henry
Telephone: 994-2463

Mountain Bell Telephone
3629 N. Wells Fargo
Scottsdale, Arizona 85251
Attention: Ev Hall
Special Provisions Foreman
Telephone: 994-7176

Salt River Project
Transmission and Distribution Department
P.O. Box 1980
Phoenix, Arizona 85001
Attention: Ron Hunter
Telephone: 267-9161

Arizona Public Service, Station 1138
P.O. Box 21666
Phoenix, Arizona 85036
Attention: Chuck Pickrell
Telephone: 258-8711

9.6 Notices.

9.6.1 Traffic Routing. The Contractor shall notify the Contracting Officer 7 days in advance of the time work will be started in areas requiring the rerouting of traffic, traffic lane striping, and removal of street signs. The foregoing shall apply to progressive modifications of traffic routings within an area in which work is in progress. Additional requirements regarding traffic are included in section: DETOURS AND TRAFFIC CONTROL FACILITIES.

9.6.2 City Engineer, County Road Department, Police, Highway Patrol, and Fire Departments shall be notified by the Contractor whenever a street is to be closed to traffic. If the closing is to be of long duration, a single notification to each department on the last working day before closing will be sufficient. A single notification shall then be made at the time the street is again opened to traffic. If the closing is to be of short duration or if different sections of the street are to be closed at different times, notifications shall be made on a day-to-day basis.

9.6.3 Utilities To be Relocated or Protected. The Contractor shall notify the Contracting Officer, in writing, 14 calendar days prior to starting work on any utility to be relocated or protected. On each relocation, notification shall include dates on which the Contractor plans excavation, by-pass work, removal work and/or installation work, as applicable.

9.6.4 The Contractor shall notify the Salt River Project and the Contracting Officer, in writing, not less than 14 days in advance of the date on which he will complete trenching, excavation, fill or rough grading, as applicable, at each location where such completed work is required for temporary or permanent relocations by others. The Contractor shall allow a period of 14 calendar days at each relocation, after which time the Contractor may resume his operations.

9.6.5 Existing Bench Marks and R/W Markers. The Contractor shall notify the Contracting Officer, in writing, 7 days in advance of the time he proposes to remove any bench mark or right-of-way marker.

9.6.6 Optional Disposal Areas. The Contractor shall notify the Contracting Officer within 30 days after receipt of Notice to Proceed, as to which optional disposal areas he proposes to use or whether the areas will not be used for disposal. Should the Contractor elect to use any of the disposal areas, he shall indicate the approximate quantities of material he proposes to place in each area. In addition to the above requirements, the Contractor shall notify the Contracting Officer 24 hours in advance of the time he proposes to start operations in the optional disposal area, and

48 hours in advance of any work which he proposes to do in the disposal areas on Saturday, Sunday or legal holidays.

9.7 Restrictions.

9.7.1 Representatives of Other Agencies. Personnel representing owners and agencies may be present for various portions of the work. However, the Contractor will be responsible only to the Contracting Officer.

9.8 Scheduled Relocation and Construction Contracts in the Work Areas.

Removal of Hayden Road street lights will be accomplished between 1 May 1978 and 1 June 1978 by the City of Scottsdale.

Relocation of the APS and SRP 12 kv electric power line will be accomplished between 24 April 1978 and 23 June 1978.

Temporary relocation of 69 kv electric power line will be accomplished between 1 April 1978 and 1 July 1978.

Water and gas line relocation and connection trenching will be accomplished between 17 April 1978 and 1 July 1978.

Camelback Road detour work will commence 1 June 1978 and removal work will be complete not later than 1 October 1978.

Low Flow Bridge construction will be accomplished at Camelback Road between 1 June 1978 and 10 November 1978, and at Indian School Road between 25 April 1978 and 1 October 1978.

Construction of the future shower and locker facility will commence 1 August 1978. Construction will be accomplished by separate contract.

10. PUBLIC SAFETY. Attention is invited to the general provision: PERMITS AND RESPONSIBILITIES. The Contractor shall provide temporary fencing, barricades, and/or guards, as required, to provide protection in the interest of public safety. Whenever the Contractor's operations create a condition hazardous to the public, he shall furnish at his own expense and without cost to the Government, such flagmen and guards as are necessary to give adequate warning to the public of any dangerous conditions to be encountered and he shall furnish, erect, or maintain such fences, barricades, lights, signs and other devices as are necessary to prevent accidents and avoid damage or injury to the public. Flagmen and guards, while on duty and assigned to give warning and safety devices shall conform to applicable city, county, and state requirements. Should the Contractor appear to be neglectful or negligent in furnishing adequate warning and protection measures, the Contracting Officer may direct attention to the existence of a hazard and the necessary warning and protective measures shall be furnished and installed by the Contractor without additional cost to the Government. Should the Contracting Officer point out the inadequacy of warning and protective measures, such action of the Contracting Officer shall not relieve the Contractor from any responsibility for public safety or abrogate his obligation to furnish and pay for those devices. The installation of any general illumination shall not relieve the Contractor of his responsibility for furnishing and maintaining any protective facility.

11. PERSONAL CLOTHING STANDARDS.

11.1 Each employee shall be required to wear clothing suitable for the weather and job conditions of the work. At a minimum, the following personal clothing requirements shall be enforced:

11.1.1 Short sleeve shirts.

11.1.2 Long trousers.

11.1.3 Leather work shoes or other appropriate protective shoes or boots. Canvas shoes, tennis or deck shoes are not acceptable.

12. OCCUPATION SAFETY AND HEALTH ACT (OSHA) STANDARDS. The OCCUPATIONAL SAFETY and HEALTH ACT (OSHA) STANDARDS for CONSTRUCTION (Title 29, Code of Federal Regulations Part 1926 as revised from time to time) and the Corps of Engineers General Safety Requirements Manual EM 385-1-1, are both applicable to this contract. The most stringent requirement of the two standards will be applicable.

13. QUALITY CONTROL. The Contractor shall inspect the work of his own forces and the work of all subcontractors for compliance with the contract requirements and record the results of the inspections. Legible copies of the daily inspection reports shall be maintained by the Contractor at the project site at all times and the original copies of the "Construction Quality Control Report" shall be delivered to the Contracting Officer on the work day following the date of the report.

13.1 Control of on-site construction. The Contractor's control shall include three phases of inspection for all definable features of work, as follows:

13.1.1 Preparatory inspection shall be performed prior to beginning any work on any definable feature of work. It shall include a review of contract requirements; a check to assure that all materials and/or equipment have been tested, submitted, and approved; a check to assure that provisions have been made to provide required control testing; examination of the work area to ascertain that all preliminary work has been completed; and a physical examination of material and equipment to assure that they conform to approved shop drawings or submittal data and that all material and/or equipment are on hand.

13.1.2 Initial inspection shall be performed as soon as work begins on a representative portion of the particular feature of work and shall include examination of the quality of workmanship as well as a review of control testing for compliance with contract requirements.

13.1.3 Follow-up inspections shall be performed daily to assure continuing compliance with contract requirements, including control testing, until completion of the particular feature of work.

13.2 The specified reports must be factual records of the Contractor's daily quality control activities and resulting actions. As such, they shall stress as major components of the report, the following:

(a) Phase(s) of construction underway during the time frame of the report. (i.e. earthwork, concrete work, structural steel erection, etc.)

(b) Phase (preparatory, initial, or follow-up), and locations of inspections and/or check tests that were made.

(c) Results of inspection, including nature of deficiencies observed and corrective actions taken or to be taken. If no inspections are listed on the report, it must be assumed that no inspections were made and that CQC is not being implemented.

(d) Report of tests performed, including those specified, with the results of the tests, including failures and remedial action to be taken. Test results, including all computations should be attached to the report form. Where test results cannot be completed by the time the report is submitted, a notation should be made that the test was performed and the approximate date test results will be available. Delayed test results should be submitted with the report form on the date received.

(e) Monitoring of materials and equipment upon arrival at the jobsite and prior to incorporation into the work for compliance with submittal approvals, damage and proper storage.

(f) Offsite surveillance activities.

(g) Job safety.

13.3 The report must contain a record of inspections and tests for all work accomplished subsequent to the previous report. Separate reports in different phases of the work may be submitted by the responsible CQC inspectors or they may be combined into one consolidated report if all CQC activities and results are covered and the responsible CQC inspectors are identified.

13.4 In all cases, the report or reports must be verified and signed by the one person delegated this responsibility by the Contractor. The verification should contain the statement that all supplies and materials incorporated in the work are in compliance with the terms of the contract except as noted.

* * * * *

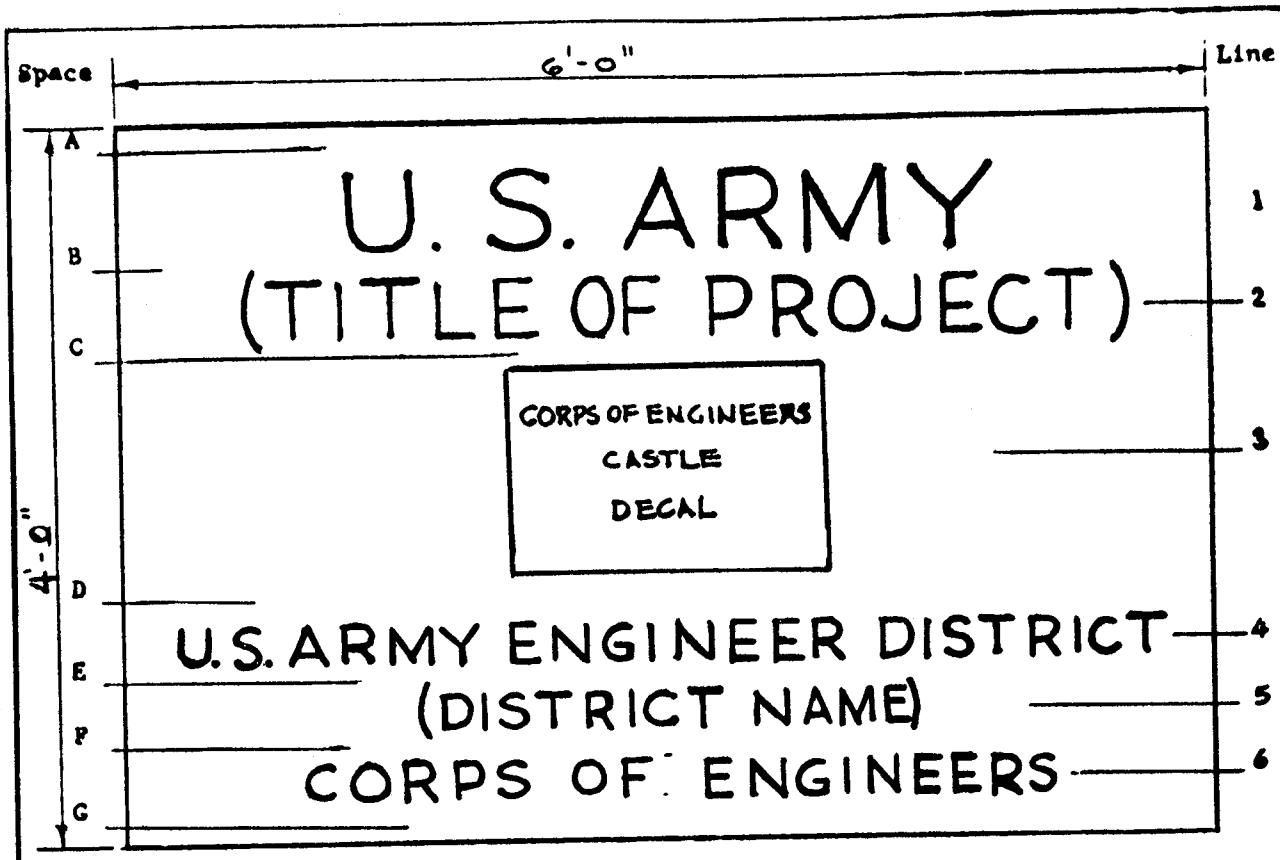

S C H E D U L E

Space	Height	Line	Description	Letter Height	Stroke
A	3"				
		1	U. S. ARMY	5 1/2"	7/8"
B	2"				
		2	PROJECT NOMENCLATURE	4"	5/8"
C	2"				
		3	CORPS OF ENGINEERS CASTLE (DECAL)	14"	--
D	3"				
		4	U. S. ARMY ENGINEER DISTRICT	2 3/4"	3/8"
E	2"				
		5	DISTRICT NAME	2 1/4"	1/4"
F	2"				
		6	CORPS OF ENGINEERS	2 1/2"	3/8"
G	3"				

Lettering Color -- Black

PROJECT SIGN
(Army-Civil Works)

Figure 1
14 August 1972

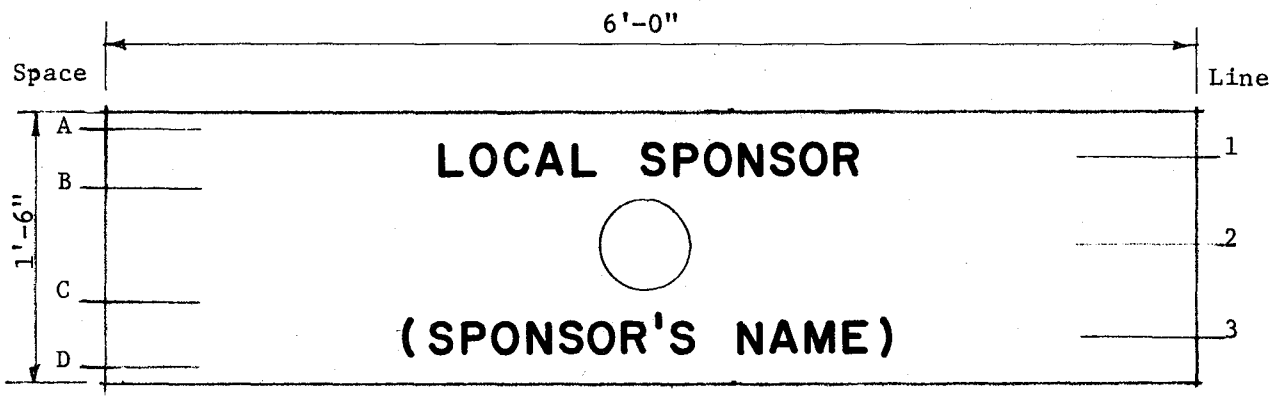

Space	Height	Line	Description	Letter Height	Stroke
A	2"				
		1	LOCAL SPONSOR	2"	3/8"
B	2" **Min.**				
		2	SPONSOR'S EMBLEM (DECAL)		
C	2" **Min.**				
		3	SPONSOR'S NAME	2"	3/8"
D	2"				

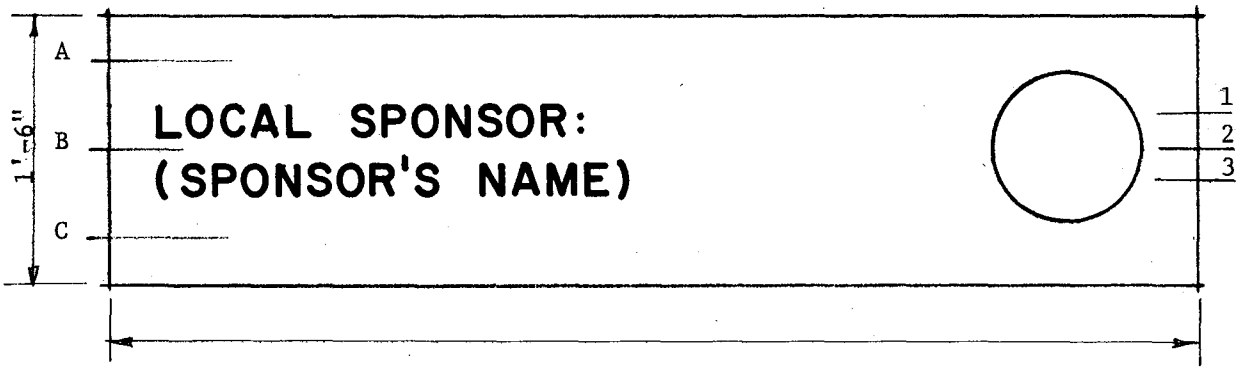

Space	Height	Line	Description	Letter Height	Stroke
A	6"				
		1	LOCAL SPONSOR	2"	3/8"
B	2"				
		2	SPONSOR'S EMBLEM (DECAL)		
C	6"				
		3	SPONSOR'S NAME	2"	3/8"

Lettering Color -- Black

Figure 1A
21 February 1975

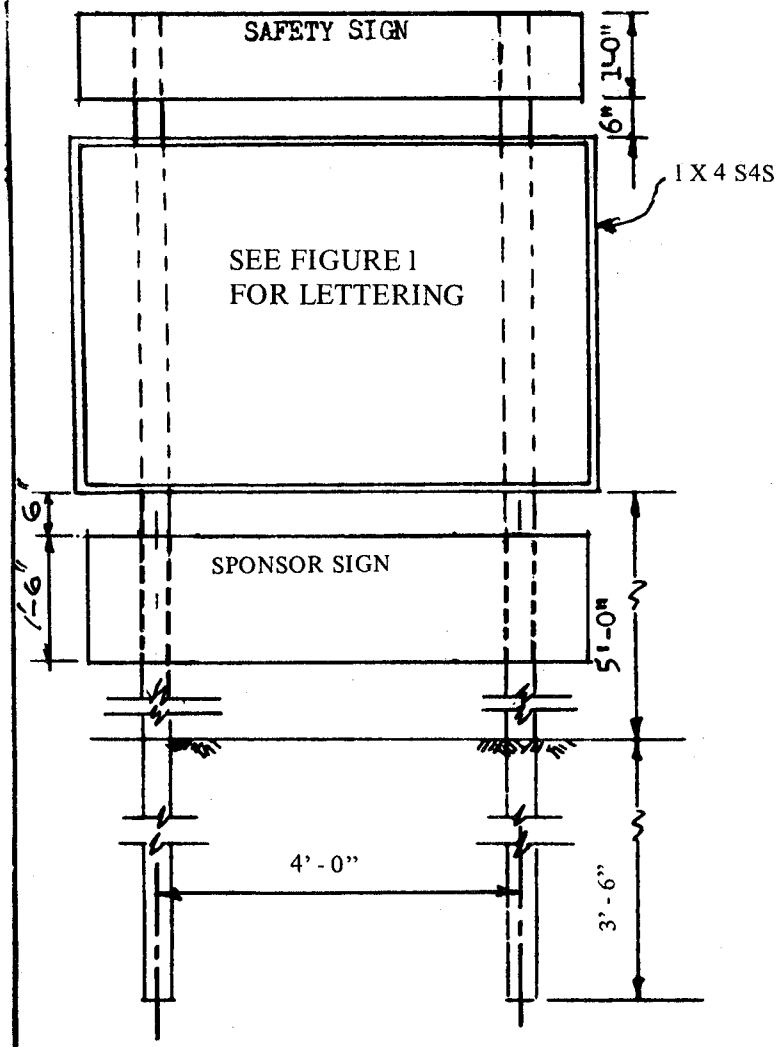

ELEVATION

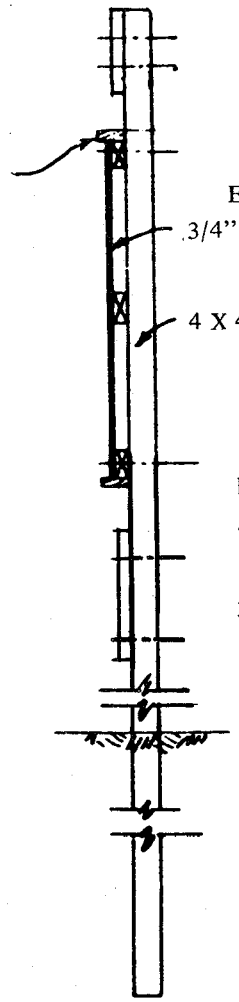

SECTION

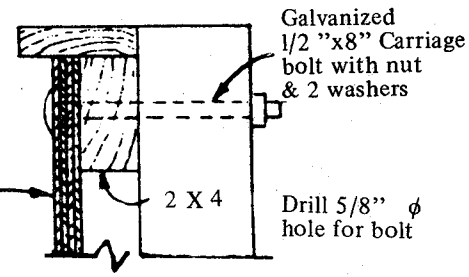

DETAIL

General Notes

1 - Lumber to be cut & formed accurately.

2 - Secure 1 X 4 and plywood with 6d finish nails at not less than 12" O.C.

3 - All exposed nails to be set & holes filled with putty.

4 - Sign to be set in good solid ground & backfill carefully tamped into place.

5 - Where necessary, posts shall be braced to provide a solid installation.

SIGN DETAILS

Figure 2
25 February 1975

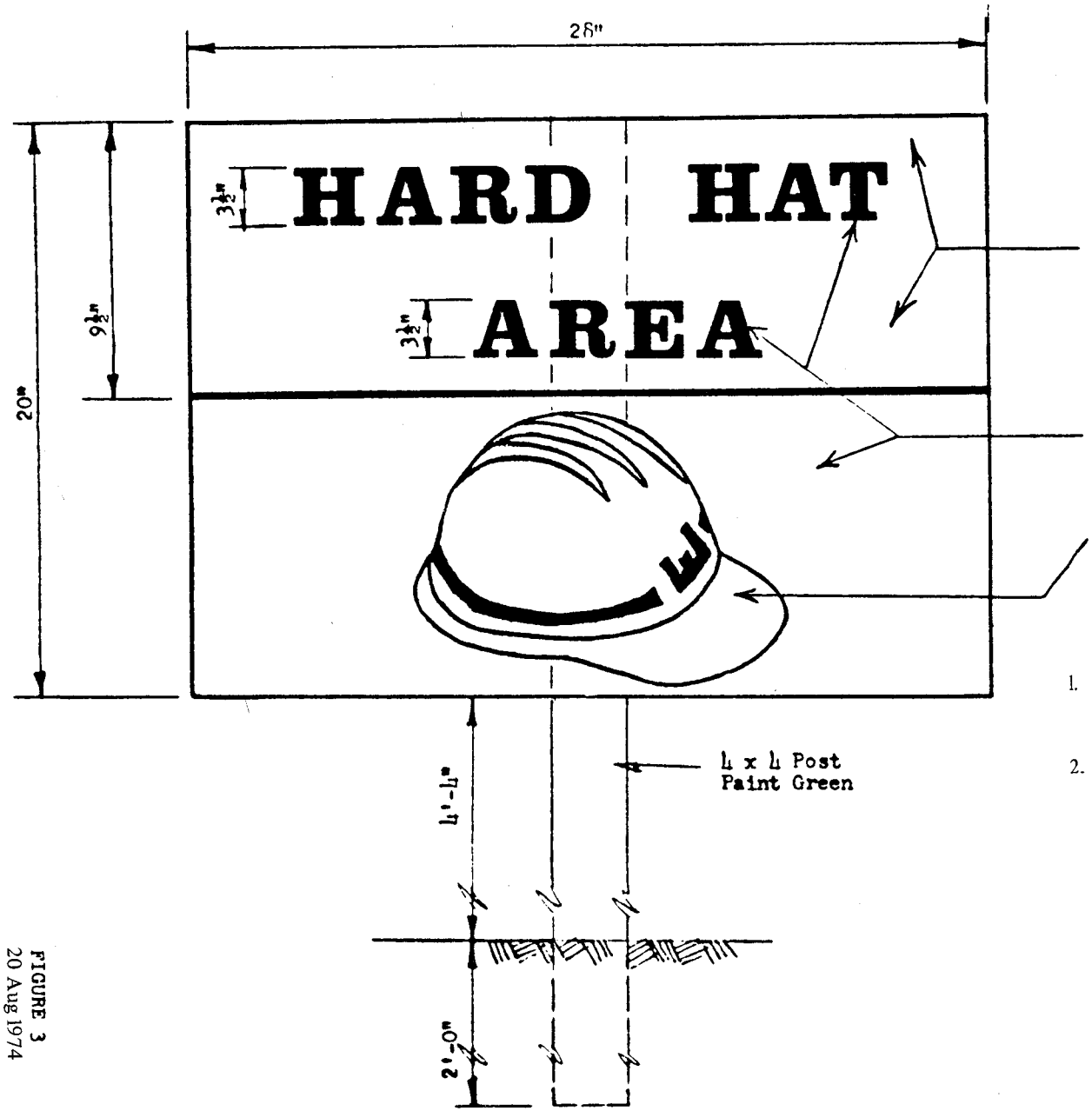

WHITE

PAINT BACK OF SIGN WHITE

GREEN

HARD HAT DECAL FURNISHED BY GOVERNMENT

General Notes

1. Green & White Paint shall be opaque glossy as specified in ANSI Standard Z53.1
2. Bolt Sign to Post w/2½" dia. Carriage Bolts.

FIGURE 3
20 Aug 1974

SECTION 1B

MEASUREMENT AND PAYMENT

Index

1. Diversion and Control of Water
2. Site Preparation
3. Excavation
4. Fill
5. Remove Existing Pavement
6. Remove Existing Concrete Curb Return, Curb and Gutter
7. Subgrade Preparation
8. Aggregate Base (ABC)
9. Asphalt Concrete Pavement
10. Driveway Entrances and Sidewalk Ramps at Hayden Road Curb Returns
11. Pedestrian Underpass
12. Concrete Curbs
13. Detours and Traffic Control
14. Pavement Markings
15. Storm Drain Modification and Storm Drains
16. Grouted Riprap (Stone) Protection
17. Waste Water Stream
18. Concrete Paving for Walks, Promenade, Plazas, Picnic Areas and Ramadas
19. Masonry Retaining Walls
20. Cheek Wall and Seat Wall
21. Bollards and Chain
22. Fencing
23. Potable Water System
24. Irrigation System
25. Irrigation System Pump Station
26. Sanitary Sewers
27. Gravel and Decomposed Surfacing
28. Turf
29. Planting
30. Tot Lot Sand Fill and Boulders
31. Landscape Boulders
32. Tennis, Croquet, Volleyball and Horseshoe Courts
33. Multipurpose (Baseball) Fields
34. Bike Racks
35. Signs and Graphics
36. Prefabricated Metal Building
37. Ramadas
38. Park Control Building
39. Visitor Center
40. Exterior Electrical and Lighting
41. Handball, Basketball and Shuffleboard Courts and Lighting and Concrete Patch
42. Tot Lot Equipment, Kiosks, and Park Control Building Lockers
43. Greenbelt Trail System

1. DIVERSION AND CONTROL OF WATER. Payment for Diversion and Control of Water will be made at the applicable contract price, which payment shall constitute full compensation for diversion and control of water, complete.

2. SITE PREPARATION. Payment for Site Preparation will be made at the applicable contract price, which payment shall constitute full compensation for site preparation, including clearing, grubbing and disposal of removed materials, complete.

3. EXCAVATION.

3.1 Measurement. A survey of the site shall be made prior to commencement of work and all measurement will be based on this survey without regard to any changes in the site that may occur during the prosecution of the work. Measurement for excavation will be made between the excavation lines and grades indicated or staked in the field and the ground surfaces as indicated by the survey specified above. The temporary slopes as excavated may vary from these indicated or staked, depending on the materials excavated and methods used in performing the work, but such alterations will not change the measurement for payment from the original lines as specified herein. Quantities will be computed by the average end area method and the planimeter will be considered a precise insttrument for measuring plotted cross sections. All excavation outside of excavation lines indicated will be considered as being for the convenience of the Contractor and will not be measured for payment.

3.2 Payment.

3.2.1 Payment for Excavation will be made at the applicable contract price, which payment shall constitute full compensation for excavation and disposal of excavated materials.

3.2.2 Unsuitable Soils. No separate payment will be made for the excavation and disposal of unsuitable soils. When such excavation is directed, payment therefore will be included in the applicable contract price for the items of work under which the unsuitable soils are encountered. When there is no applicable contract item an adjustment will be made.

3.2.3 Excavation for Structures. No separate payment will be made for excavation for structures. All costs therefore shall be included in the applicable contract prices for the items to which the work applies.

3.2.4 Trenches. No separate payment will be made for excavation of utility and pipe trenches. All costs in connection therewith shall be included in the applicable contract prices for the items to which the work applies.

3.2.5 Payment for Stripping Lake Borrow Area will be made at the applicable contract price, which payment shall constitute full compensation for stripping the lake borrow area, including stockpiling material suitable for topsoil, complete.

4. FILL.

4.1 Measurement for Fill will be made between the excavation and structure lines and the fill limit lines, or between the ground lines and fill lines indicated or staked in the field. Quantities will be computed in cubic yards by the average end area method and the planimeter will be considered a precise instrument for measuring plotted cross sections.

4.2 Payment.

4.2.1 Payment for Fill will be made at the applicable contract price, which payment shall constitute full compensation for placing and compacting fills, including topsoil, complete.

4.2.2 Fill for Structures. No separate payment will be made for fill or backfill about structures. All such costs shall be included in the applicable contract prices for the items to which the work applies.

4.2.3 Lake Lining Fill. Payment for lake lining fill will be made at the applicable contract price, which payment shall constitute full compensation for obtaining placing and compacting the lake lining fill.

4.2.4 Trenches. No separate payment will be made for backfilling for utility and pipelines. All costs in connection therewith shall be included in the contract price for the items to which the work applies.

4.2.5 Subgrade Preparation. No separate payment will be made for subgrade preparation and all costs in connection therewith shall be included in the contract prices for the items to which the work applies.

5. REMOVE EXISTING PAVEMENT. Payment for Remove Existing Pavement will be made at the applicable contract price, which payment shall constitute full compensation for removing and disposal of existing bituminous pavement materials, complete.

6. REMOVE EXISTING CONCRETE CURB RETURN, CURB AND GUTTER. Payment for Remove Existing Concrete Curb Return, Curb and Gutter will be made at the applicable contract price, which payment shall constitute full compensation for removing and disposal of existing concrete curb returns, curb and gutter materials, complete.

7. SUBGRADE PREPARATION.

7.1 Measurement of Subgrade Preparation will be made to the nearest square yard for the actual area of subgrade preparation within the lines indicated.

7.2 Payment for Subgrade Preparation will be made at the applicable contract prices, which payments shall constitute full compensation for road and parking lot subgrade preparation, complete.

8. AGGREGATE BASE (ABC).

8.1 Measurement of Agregate Base will be made to the nearest cubic yard of material acceptably placed within the lines indicated.

8.2 Payment for Aggregate Base will be made at the applicable contract prices, which payments shall constitute full compensation for obtaining and placing aggregate base material, complete.

9. ASPHALT CONCRETE PAVEMENT.

9.1 Measurement. The unit of measurement for the asphalt concrete pavement will be the ton (2,000 lbs.). The Contractor shall weigh each load on a certified platform scale and shall furnish the Contracting Officer with duplicate Weighmasters' Certificates showing the actual net weights. One ticket shall be furnished to the plant inspector and one ticket to the inspector at the construction site. The bituminous mixture shall be weighed after mixing and no deduction will be made for the weight of bituminous material incorporated therein. Asphalt concrete used for convenience of the Contractor will not be measured for payment.

9.2 Payment for Asphalt Concrete Pavement will be made at the applicable contract prices, which payments shall constitute full compensation for asphalt concrete pavement materials and placement, including prime and tack coat, complete.

10. DRIVEWAY ENTRANCES AND SIDEWALK RAMPS AT HAYDEN ROAD CURB RETURNS. Payment for Driveway Entrances and Sidewalk Ramps will be made at the applicable contract prices, which payments shall constitute full compensation for driveway entrances and sidewalk ramps including subgrade preparation, complete.

11. PEDESTRIAN UNDERPASS. Payment for Pedestrian Underpass will be made at the applicable contract price, which payment shall constitute full compensation for the pedestrian underpass, including grating and guardrail, complete. No payment will be made for electrical lighting.

12. CONCRETE CURBS. Payment for Concrete Curbs will be made at the applicable contract prices, which payments shall constitute full compensation for the various types of concrete curbs, including subgrade preparation, complete.

13. DETOURS AND TRAFFIC CONTROL. Payment for Detours and Traffic Control will be made at the applicable contract price, which payment shall constitute full compensation for detours and traffic control, including flagmen, temporary signals, barricading and police officers, complete.

14. PAVEMENT MARKINGS. Payment for Pavement Markings will be made at the applicable contract prices, which payments shall constitute full compensation for pavement marking, including curb marking, complete. No payment will be made for pavement marking of courts and playing surfaces.

15. STORM DRAIN MODIFICATION AND STORM DRAINS. Payment for Storm Drain Modification and Storm Drains will be made at the applicable contract prices, which payments shall constitute full compensation for the various storm drains and modification, including excavation, trenching, fill, backfill, catch basins, headwalls, effluent aprons, stand pipe, side drains and pipe penetration through lake lining, complete.

16. GROUTED RIPRAP (STONE) PROTECTION. Payment for Grouted Riprap Protection will be made at the applicable contract price, which payment shall constitute full compensation for grouted riprap (stone) protection, including stone and grout work and subgrade preparation, complete.

17. WASTE WATER STREAM. Payment for Waste Water Stream will be made at the applicable contract price, which payment shall constitute full compensation for waste water stream, including concrete work and subgrade preparation, complete.

18. CONCRETE PAVING FOR WALKS, PROMENADE, PLAZAS, PICNIC AREAS AND RAMADAS. Payment for Concrete Paving will be made at the applicable contract price, which payment shall constitute full compensation for concrete paving, including concrete work and subgrade preparation for walks, steps, ramps, promenade, plazas, picnic areas and ramadas, complete. No payment will be made for courts or playing surfaces, ramada structure and additive items.

19. MASONRY RETAINING WALLS. Payment for Masonry Retaining Walls will be made at the applicable contract price, which payment shall constitute full compensation for the various sizes and types of masonry retaining walls, including concrete footings, excavation, fill and backfill, complete.

20. CHEEK WALL AND SEAT WALL. Payment for Cheek Wall and Seat Wall will be made at the applicable contract prices, which payments shall constitute full compensation for cheek and seat walls, including concrete footings, excavation, fill and backfill, complete.

21. BOLLARDS AND CHAIN. Payment for Bollards and Chain will be made at the applicable contract price, which payment shall constitute full compensation for fabrication and installation of bollards and chain, complete.

22. FENCING. Payment for Fencing will be made at the applicable contract price, which payment shall constitute full compensation for furnishing and installing chain link fencing materials, including swing, sliding and roto gates and post setting, complete.

23. POTABLE WATER SYSTEM. Payment for Potable Water System will be made at the applicable contract price, which payment shall constitute full compensation for furnishing and installing potable water system materials, including connection to existing water mains, piping, fire hydrant, fire hose risers, excavation, trenching, fills and backfill, drinking fountains and dry wells, complete.

24. IRRIGATION SYSTEM. Payment for Irrigation System will be made at the applicable contract price, which payment shall constitute full compensation for furnishing and installing irrigation system materials, including piping to the pressure tank coupling, valving, heads, controllers, supports and mounting, excavation, trenching, electrical and control wiring to the point of connection with the electrical distribution, complete.

25. IRRIGATION SYSTEM PUMP STATION. Payment for Irrigation System Pump Station will be made at the applicable contract price, which payment shall constitute full compensation for furnishing and installing the irrigation system pump station materials and equipment including excavation, trenching, fill, backfill, concrete work, pressure tank, compressor, pump, pump controls, suction and discharge piping, pump inlet structure, and inlet, complete. No payment will be made furnishing and installing the irrigation controllers, electrical distribution center, transformer. pads, conduit, gravel filled trench, and pressure tank discharge piping and fencing materials.

26. SANITARY SEWERS. Payment for Sanitary Sewers will be made at the applicable contract price, which payment shall constitute full compensation for furnishing and installing sanitary sewer materials, including connection to existing sewers, adjust top of existing manholes, manhole, cleanouts, excavation, trenching, fill, backfill and concrete encasement, complete.

27. GRAVEL AND DECOMPOSED SURFACING. Payment for Gravel and Decomposed Granite Surfacing will be made at the applicable contract price, which payment shall constitute full compensation for gravel and decomposed granite surfacing, including obtaining and placing materials and subgrade preparation, complete.

28. TURF. Payment for Turf will be made at the applicable contract price, which payment shall constitute full compensation for furnishing and installing turf materials, including establishment and maintenance.

29. PLANTING. Payment for Planting will be made at the applicable contract price, which payment shall constitute full compensation for furnishing and installing plant materials, including trees, shrubs, ground covers or vines, establishment and maintenance.

30. TOT LOT SAND FILL AND BOULDERS. Payment for Tot Lot Sand Fill and Boulders will be made at the applicable contract price, which payment shall constitute full compensation for obtaining and placing sand fill and boulder materials, including subgrade preparation, complete. No payment will be made for tot lot equipment, concrete curb or pavement.

31. LANDSCAPE BOULDERS. Payment for Landscape Boulders will be made at the applicable contract price, which payment shall constitute full compensation for obtaining and placing landscape boulders, including excavation, fill and backfill, complete.

32. TENNIS, CROQUET, VOLLEYBALL AND HORSESHOE COURTS. Payment for Tennis, Croquet, Volleyball and Horseshoe Courts will be made at the applicable contract prices, which payments shall constitute full compensation for furnishing and installing tennis, croquet, volleyball and horseshoe court materials, including subgrade preparation playing surfaces, nets, backstops, stakes, posts, concrete footings and court markings, complete. No payment will be made for concrete or masonry walls, curbs, walks, ramps or steps and fencing.

33. MULTIPURPOSE (BASEBALL) FIELDS. Payment for Multipurpose (Baseball) Fields will be made at the applicable contract price, which payment shall constitute full compensation for finish grading and layout of the multipurpose (baseball) fields, including home plate and base line layout and pitching mound, complete. No payment will be made for turf.

34. BIKE RACKS. Payment for Bike Racks will be made at the applicable contract price, which payment shall constitute full compensation for the fabrication and installation of bike racks, complete.

35. SIGNS AND GRAPHICS. Payment for Signs and Graphics will be made at the applicable contract price, which payment shall constitute full compensation for furnishing and installing signs and graphics, including ceramic concrete and masonry work, complete.

36. PREFABRICATED METAL BUILDING. Payment for Prefabricated Metal Building will be made at the applicable contract price, which payment shall constitute full compensation for furnishing and installing the prefabricated metal building, including concrete work and foundation preparation, complete.

37. RAMADAS. Payment for Ramadas will be made at the applicable contract price, which payment shall constitute full compensation for furnishing and installing ramada materials, including concrete footings, excavation and backfill, complete. No payment will be made for concrete pavement or masonry walls.

38. PARK CONTROL BUILDING. Payment for Park Control Building will be made at the applicable contract price, which payment shall constitute full compensation for the park control building, including electrical work and utilities to a point 5 feet outside of building wall line, complete. No payment will be made for additive items.

39. VISITOR CENTER. Payment for Visitor Center will be made at the applicable contract price, which payment shall constitute full compensation for the visitors center building, including electrical work and utilities to a point 5 feet outside of building wall line, complete.

40. EXTERIOR ELECTRICAL AND LIGHTING. Payment for Exterior Electrical and Lighting will be made at the applicable contract price, which payment shall constitute full compensation for exterior electrical and lighting work, including transformers, switchboards and distribution centers, concrete pads, gravel filled trenches, underground conduit or duct, service pedestals, lighting for signs, pedestrial tunnel, parking lots, courts, tot lot, multipurpose (baseball) fields, standards or poles, concrete work, excavation, backfill, and appurtenant work, complete. No payment will be made for electrical or lighting work attached to the visitor center or park control buildings or required for additive items.

41. HANDBALL, BASKETBALL AND SHUFFLEBOARD COURTS AND LIGHTING AND CONCRETE PATH. Payment for Handball, Basketball and Shuffleboard Courts and Lighting and Concrete Path will be made at the applicable contract prices, which payments shall constitute full compensation for furnishing and installing handball, basketball and shuffleboard courts and concrete path materials, including subgrade preparation, playing surfaces, backstops, posts, excavation and backfill concrete work, court markings and electric lighting for courts, complete.

42. TOT LOT EQUIPMENT, KIOSKS, AND PARK CONTROL BUILDING LOCKERS. Payment for Tot Lot Equipment, Kiosks, and Park Control Building Lockers will be made at the applicable contract price, which payment shall constitute full compensation for furnishing and installing the tot lot equipment, kiosks, and park control building lockers, complete.

43. GREENBELT TRAIL SYSTEM. Payment for the Greenbelt Trail System will be made at the applicable contract price, which payment shall constitute full compensation for the greenbelt trail system including earthwork, subgrade preparation, and concrete work, complete.

* * * * *

SECTION 1D

ENVIRONMENT PROTECTION

Index

1. Scope
2. Reference
3. General
4. Notification
5. Subcontractors
6. Implementation
7. Protection of Land Resources
8. Recording and Preserving Historical and Archeological Finds
9. Protection of Water Resources
10. Protection of Fish and Wildife
11. Disposal of Cleared and Grubbed Material and Other Debris
12. Dust Control
13. Maintenance of Pollution Control Facilities During Construction

1. SCOPE. This section covers the furnishing of all labor, materials and equipment and performing all work required for the protection of the environment during construction operations except for those measures set forth in other Technical Provisions of these specifications.

2. REFERENCE. "Standard Methods for the Examination of Water, Sewage, and Industrial Wastes," Thirteenth Edition, 1971, published by American Public Health Association, 1015 Eighteenth Street, N.W., Washington, D.C. 20036.

3. GENERAL. For the purpose of this specification, environment protection is defined as the retention of the environment in its natural state to the greatest possible extent during project construction and to enhance the natural appearance in its final condition. Environment protection requires consideration of air, water, and land, and involves noise, solid waste-management and management of radiant energy and radioactive materials, as well as other pollutants. In order to prevent, and to provide for abatement and control of, any environmental pollution arising from the construction activities in the performance of this contract, the Contractor and his subcontractors shall comply with all applicable Federal, State, and local laws and regulations concerning environmental pollution control and abatement.

4. NOTIFICATION. The Contracting Officer will notify the Contractor in writing of any noncompliance with the aforementioned Federal, State, or local laws or regulations. Such notice, when delivered to the Contractor or his authorized representative at the site of the work, shall be deemed sufficient for the purpose. The Contractor shall, after receipt of such notice, immediately inform the Contracting Officer of proposed corrective action and take such action as may be approved. If the Contractor fails or refuses to comply promptly, the Contracting Officer may issue an order stopping all or part of the work until satisfactory corrective action has been taken. No part of the time lost due to any such stop orders shall be made the subject of a claim for extension of time or for excess costs or damages by the Contractor.

5. SUBCONTRACTORS. Compliance with the provisions of this section by subcontractors will be the responsibility of the Contractor.

6. IMPLEMENTATION. Prior to commencement of the work the Contractor will:

(1) submit in writing his proposals for implementing this section for environment protection;

(2) meet with representatives of the Contracting Officer to develop mutual understandings relative to compliance with this provision and administration of the environment protection program.

Approval of the Contractor's plan for environment protection will not relieve the Contractor of his responsibility for adequate and continuing control of pollutants.

7. PROTECTION OF LAND RESOURCES.

7.1 General. The land resources within the project boundaries and outside the limits of permanent work performed under this contract shall be preserved in their present condition or be restored to a condition after completion of construction that will appear to be natural and not detract from the appearance of the project. The Contractor shall confine his construction activities to areas defined by the plans or specifications. The following additional requirements are intended to supplement the requirements of General Provisions 49, 50, and 53.

7.2 Prevention of Landscape Defacement. Except in areas indicated on the plans or specified to be cleared, the Contractor shall not deface, injure, or destroy trees or shrubs, nor remove or cut them without the authority of the Contracting Officer. Ropes, cables, or guys shall not be fastened to or attached to any existing nearby trees for anchorages unless specifically authorized. Where such special emergency use is permitted, it shall be performed in such a manner as to avoid damage to the trees. The Contractor shall in any event be responsible for any damage resulting from such use. Where the possibility exists that trees may be defaced, bruised, injured, or otherwise damaged by the Contractor's equipment or operations, the Contractor shall adequately protect such trees. Stone,

earth or other material that is displaced into uncleared areas shall be removed. Monuments and markers shall be protected before construction operations commence. A preconstruction survey including photographs shall be accomplished by the Contractor and a report of survey furnished when required by the Contracting Officer.

7.3 Restoration of Landscape Damage. Any trees, shrubs, or other landscape features scarred or damaged by the Contractor's equipment or operations shall be restored to a condition satisfactory to the Contracting Officer. Restoration of scarred and damaged trees, shrubs, and other landscape features shall be performed in an approved manner by experienced workmen. Items damaged beyond restoration shall be removed and disposed of under requirements of clearing and grubbing. Trees and shrubs that are to be removed because of damage shall be replaced at the Contractor's expense by maturee, acceptably grown, trees of the same species or a species approved by the Contracting Officer. The size and quality of all replacements shall also be approved by the Contracting Officer.

7.4 Location of Camp Sites, Storage, and Housing Facilities. Contractor's camps, storage, and other construction buildings, located on Government property, which is required in the performance of the work, shall be located upon cleared portions of the jobsite or areas to be cleared, and shall require written approval of the Contracting Officer. The preservation of the landscape shall be an imperative consideration in the selection of all sites and in the construction of buildings. Plans showing campsites, storage, and housing facilities shall be submitted for approval of the Contracting Officer. Where buildings or tent platforms are constructed on sidehills, the Contracting Officer may require cribbing to be used to obtain level foundations. Benching or leveling of earth may be permitted, depending on the location of the proposed facility.

7.5 Temporary Excavation and Embankments. If the Contractor proposes to construct temporary roads or embankments and excavations for plant and/or work areas, he shall submit the following for approval prior to scheduled start of such temporary work.

7.5.1 A layout of all temporary roads, excavations and embankments to be constructed within the work area.

7.5.2 A landscaping plan showing the proposed restoration of the area. The plan shall provide for the obliteration of construction scars as such and shall provide for a reasonably natural appearing final condition of the area. No unauthorized road construction, excavation or embankment construction (including borrow and disposal areas) will be permitted.

7.6 Post-Construction Cleanup or Obliteration. The Contractor shall obliterate all signs of temporary construction facilities such as haul roads, work areas, structures, foundations of temporary structures or stockpiles of excess or waste materials, as directed by the Contracting Officer. The area will be restored to near natural conditions which will permit the growth of vegetation thereon. Except in specific cases, restoration to original contours will not be required, however, all restored areas shall be smoothly and evenly dressed and sloped to drain.

8. RECORDING AND PRESERVING HISTORICAL AND ARCHEOLOGICAL FINDS. All items having any apparent historical or archeological interest which are discovered in the course of any construction activities shall be carefully preserved. The Contractor shall leave the archeological find undisturbed and shall immediately report the find to the Contracting Officer so that the proper authorities may be notified.

9. PROTECTION OF WATER RESOURCES.

9.1 General. The Contractor shall not pollute streams, lakes, water courses, or reservoirs with fuels, oils, bitumens, calcium chloride, acids, insecticides, herbicides, or other harmful materials. The Contractor shall investigate and comply with all applicable Federal, State, county, and municipal laws concerning pollution of rivers and streams.

9.2 Erosion Control. Prior to any major construction the Contractor shall submit a plan for approval of the Contracting Officer showing his scheme for controlling erosion and disposing of wastes.

9.2.1 Surface drainage from cuts and fills within the construction limits, whether or not completed, and from borrow and waste disposal areas, shall, if turbidity producing materials are present, be held in suitable sedimentation ponds or shall be graded to control erosion within acceptable limits. Temporary erosion and sediment control measures such as berms, dikes, drains, immediate seeding of cut and fill slopes, or sedimentation basins, if required to meet the above standards, shall be provided and maintained until permanent drainage and erosion control facilities are completed and operative. The area of bare soil exposed at any one time by construction operations should be held to a minimum. Stream crossings by fording with equipment shall be limited to control turbidity. Any temporary culverts or bridge structures shall be removed upon completion of the project. Fills and waste areas shall be constructed by selective placement to eliminate silts or clays on the surface that will erode and contaminate adjacent streams.

9.3 Spillages. Special measures shall be taken to prevent chemicals, fuels, oils, greases, bituminous materials, waste washings, herbicides and insecticides, and concrete drainage from entering public waters.

9.4 Washing and Curing Water. Water used in embankment material processing, aggregate processing, concrete curing, foundation and concrete lift cleanup, and other waste waters shall not be allowed to reenter the water course if a significant increase in the turbidity of the water course will result therefrom. The Contractor shall remove from within the cofferdam all wash, curing and waste waters derived from sources either within or outside the cofferdam.

9.5 Disposal. Disposal of any materials, wastes, effluents, trash, garbage, oil, grease, chemicals, etc., in areas adjacent to streams shall not be permitted. If any waste material is dumped in unauthorized areas, the Contractor shall remove the material and restore the area to the original condition before being disturbed. If necessary, contaminated ground shall be excavated, disposed of as directed by the Contracting Officer, and replaced with suitable fill material, compacted and finished with topsoil and planted as required to reestablish vegetation.

10. PROTECTION OF FISH AND WILDLIFE. The Contractor shall at all times perform all work and take such steps required to minimize interference with or disturbance to fish and wildlife (refere to specific species as required). The Contractor will not be permitted to alter waterflows or otherwise disturb native habitat adjacent to the project area which, in the opinion of the Contracting Officer, are critical to fish or wildlife.

11. DISPOSAL OF CLEARED AND GRUBBED MATERIAL AND OTHER DEBRIS.

11.1 General. All debris resulting from construction operations on this contract shall be disposed of by removal from the site.

11.2 Removal. The Contractor shall remove all debris resulting from contract operations from the site of the work. Such disposal shall comply with all applicable Federal, State, and local laws. The Contractor may, at his option, retain for his own use or diposal by sale or otherwise any such materials of value. The Government assumes no responsibility for the protection or safekeeping of any materials retained by the Contractor. Such materials shall be removed from the site of the work before the date of completion of the work under these specifications.

12. DUST CONTROL. The Contractor will be required to maintain all excavations, embankments, stockpiles, haul roads, permanent access roads, plant sites, waste areas, borrow areas, and all other work areas within or without the project boundaries free from dust which would cause a hazard or nuisance to others. Approved temporary methods of stabilization consisting of sprinkling, chemical treatment, light bituminous treatment or similar methods will be permitted to control dust. Sprinkling, to be approved, must be repeated at such intervals as to keep all parts of the disturbed area at least damp at all times, and the Contractor must have sufficient competent equipment on the job to accomplish this if sprinkling is used. Dust control shall be performed as the work proceeds and whenever a dust nuisance or hazard occurs. No separate or direct payment will be made for dust control and the cost thereof shall be considered incidental to and included in the contract prices for excavation and embankments.

13. MAINTENANCE OF POLLUTION CONTROL FACILITIES DURING CONSTRUCTION. During the life of this contract, the Contractor shall maintain all facilities constructed for pollution control under this contract as long as the operations creating the particular pollutant are being carried out or until the material concerned has become stabilized to the extent that pollution is no longer being created. During the construction period the Contractor should conduct frequent training periods on environment protection. The curricula should include methods of detecting and avoiding pollution; familiarity with pollution standards, both statutory and contractual; and installation and care of vegetative covers, plants and other facilties to prevent and correct environmental pollution.

* * * * *

SECTION 2A

DIVERSION AND CONTROL OF WATER

1. REQUIREMENT.

1.1 General. All permanent construction shall be carried on in areas free from water. Water in varying quantities may be flowing in the channel during the entire period of construction. Runoff from the watersheds is rapid and, during periods of rain, intermittent freshets may be expected. The responsibility of the Contractor for protection of work against water flows is specified in paragraph: DAMAGE TO WORK of the SPECIAL PROVISIONS. At all locations where construction work is at a lower elevation than the elevation of the stream or ground water at the time of doing the work, suitable cofferdams or dikes, if necessary, shall be constructed, the construction area shall be dewatered prior to commencement of the work, and all subgrades, whether for earth fill, filter, stone, or concrete, shall be kept drained and free of water throughout the working period. Within 10 days after award of contract, the Contractor shall submit plans showing the methods he proposes to use to dewater each working area and control the water from rain, sheet flow and other surface water. The plans shall show the scheme of operations and a complete layout of drainage pipes, pumps, diversion channels, cofferdams, etc. The plans shall also take into consideration the following specific requirements.

1.2 By-Pass Capacities.

1.2.1 General. The Contractor shall provide for diversion of channel flows as hereinafter specified. The channel flows will include water originating upstream of the work, water from side drains and channels adjacent to the worksite and will be in addition to any and all ground water originating within the work. Surface flows in excess of 250 cfs will be regarded as floodflows.

1.3 Drainage Ditches. The location and depth of any drainage ditches shall be subject to approval of the Contracting Officer. Special precautions shall be taken to avoid impairing the permanent subgrade, and any excavation below invert subgrade shall be refilled with compacted fill in accordance with section: EARTHWORK at no additional cost to the Government.

* * * * *

SECTION 2C

WATER LINES

Index

1. Excavation, Trenching and Backfilling for Water Lines
2. Applicable Publications
3. General
4. Materials
5. Installation
6. Hydrostatic Tests
7. Disinfection
8. Cleanup

1. EXCAVATION, TRENCHING, AND BACKFILLING FOR WATER LINES. Excavation, trenching, and backfilling shall be in section(s): EXCAVATION, TRENCHING, AND BACKFILLING FOR UTILITIES SYSTEMS and EARTHWORK except as modified herein.

2. APPLICABLE PUBLICATIONS. The following publications of the issues listed below, but referred to thereafter by basic designation only, form a part of this specification to the extent indicated by the references thereto.

2.1 Federal Specifications (Fed. Spec.).

WW-P-421c	Pipe, Cast Gray and Ductile Iron, Pressure (for Water and Other Liquids)
WW-V-51E & Int. Am-2 (GSA-FSS)	Valve, Angle, Check, and Globe, Bronze (125, 150 and 200 Pound, Threaded End, Flange Ends, Solder Ends, and Brazed End for Land Use)
WW-V-54D & Int. Am-2 (GSA-FSS)	Valve, Gate, Bronze (125, 150 and 200 Pound, Threaded Ends, Flanged Ends, Solder End, and Brazed Ends, for Land Use)

2.2 American National Standards Institute, Inc. (ANSI) Standards.

A21.4-1974	Cement-Mortar Lining for Cast-Iron and Ductile-Iron Pipe and Fittings for Water
A21.6-1975	Cast-Iron Pipe Centrifugally Cast in Metal Molds, for Water or Other Liquids
A21.8-1975	Cast-Iron Pipe Centrifugally Cast in Sand-Lined Molds, for Water or Other Liquids
A21.10-1971 & A21.10a-1972	Gray-Iron and Ductile-Iron Fittings, 2 in. through 48 in. for Water and Other Liquids
A21.11-1972	Rubber Gasket Joints for Cast-Iron and Ductile-Iron Pressure Pipe and Fittings
A21.51-1971	Ductile-Iron Pipe, Centrifugally Cast in Metal Molds or Sand-Lined Molds, for Water or Other Liquids
B16.1-1975	Cast Iron Pipe Flanges and Flanged Fittings 25, 125, 250 and 800 lb.
B16.3-1971	Malleable-Iron Threaded Fittings, 150 and 300 lb.
B16.26-1975	Cast Copper Alloy Fittings for Flared Copper Tubes

2.3 American Society for Testing and Materials (ASTM) Standards.

A 120-73	Black and Hot-Dipped Zinc-Coated (Galvanized) Welded and Seamless Steel Pipe for Ordinary Uses
B 88-76	Seamless Copper Water Tube
D 256-73	Impact Resistance of Plastics and Electrical Insulating Materials
D 638-76	Tensile Properties of Plastics
D 648-72	Deflection Temperature of Plastics Under Flexural Load
D 792-66(R 1975)	Specific Gravity and Density of Plastics by Displacement
D 1784-75	Rigid Poly(Vinyl Chloride) Compounds and Chlorinated Poly(Vinyl Chloride) Compounds
D 1785-76	Poly (Vinyl Chloride) (PVC) Plastic Pipe, Schedules 40, 80, and 120
D 1869-66(R 1972)	Rubber Rings for Asbestos-Cement Pipe

D 2240-75	Rubber Property-Durometer Hardness
D 2241-76	Poly (Vinyl Chloride)(PVC) Plastic Pipe (SDR-PR)
D 2464-76	Threaded Poly (Vinyl Chloride) (PVC) Plastic Pipe Fittings, Schedule 80
D 2774-72	Recommended Practice for Underground Installation of Thermoplastic Pressure Piping

2.4 American Water Works Association (AWWA) Standards.

B300-75	Hypochlorites
B301-59	Liquid Chlorine
C400-75	Asbestos-Cement Water Pressure Pipe, 4 in. Through 24 in., for Water and Other Liquids
C500-71	Gate Valves – 3 in. Through 48-in. – for Water and Other Liquids
C502-73	Dry Barrel Fire Hydrants
C504-74	Rubber-Seated Butterfly Valves
C600-64	Installation of Cast-Iron Water Mains
C601-68	Disinfecting Water Mains
C603-65	Installation of Asbestos-Cement Water Pipe
C800-66	Threads for Underground Service Line Fittings
C900-75	Poly(Vinyl Chloride) (PVC) Pressure Pipe 4-inch through 12-inch for Water

3. GENERAL. This section covers water distribution lines water service lines, and connections to building services at a point approximately 5 feet outside all buildings and structures to which service is required, complete. Pipe and accessories shall be new and unused unless otherwise approved.

3.1 Piping for Water Service Lines Less Than 3 Inches in Diameter shall be plastic, galvanized steel, or copper tubing, unless otherwise shown or specified. Piping for water service lines for sizes 3 inches and larger shall be cast iron, ductile iron, asbestos cement, plastic through 12-inch nominal diameter, unless otherwise shown or specified.

3.2 Piping for Water Distribution Lines shall be cast iron, ductile iron, asbestos cement, plastic through 12-inch nominal diameter, unless otherwise shown or specified.

3.3 Recommendations of the Manufacturer. The Contractor shall, as a part of the shop drawings, submit to the Contracting Officer the manufacturer's recommendations for each material or procedure to be utilized which is required to be in accordance with such recommendations. The Contractor shall have a copy of the manufacturer's instructions available at the construction site at all times.

4. MATERIALS shall conform to the respective specifications and other requirements specified below:

4.1 Pipe.

4.1.1 Asbestos Cement Pipe. AWWA C400, class 150, unless otherwise shown or specified. Uncombined calcium hydroxide content shall not exceed 1.0 percent. Three-inch pipe shall conform to AWWA C400 and shall also meet the following strength requirements:

	Flexural-Proof Test, Pounds		Applied Crushing Loads
Class	9-Foot Span	12-Foot Span	Pounds Per Lineal Foot
150	830	620	6,700

4.1.2 Cast Iron Pipe. Federal Specification WW-P-421, class 150, type II or III, unless otherwise shown or specified, or ANSI A21.6 or A21.8, working pressure not less than 150 pounds per square inch with mechanical or push on joints, unless otherwise shown or specified. Pipe shall be cement mortar lined.

4.1.2.1 Cement Mortar Lining. ANSI A21.4. Linings shall be standard thickness.

4.1.3 Copper Tubing. ASTM B 88, type K, annealed.

4.1.4 Ductile Iron Pipe. ANSI A21.51, working pressure not less than 150 pounds per square inch unless otherwise shown or specified. Pipe shall be cement mortar lined.

4.1.4.1 Cement Mortar Lining. ANSI A21.4. Linings shall be standard thickness.

4.1.5 Plastic Pipe. All pipe, couplings and fittings shall be manufactured of material conforming to ASTM D1784, Type 1120. Pipe and fittings shall bear the seal of approval (nsf mark) of the National Sanitation Foundations standard for plastic pipe and fittings for potable water service.

4.1.5.1 Plastic Pipe less than 4 inch diameter. Pipe, couplings, and fittings shall be schedule 80, conforming to ASTM D1785. Joints shall be one of the following.

a. Screw-joints conforming to ASTM D2464.

b. Bell and spigot joints conforming to the applicable requirements of ASTM D1785, schedule 80, with pipe ends tapered for insertion into gasketed couplings and fittings with built-in stops.

4.1.5.2 Plastic Pipe, 4-inch through 12-inch diameter. Pipe, couplings, and fittings shall conform to AWWA C900, C. J. pipe dimensions only, elastomeric-gasket-bell-and-spigot-fittings, pipe and couplings.

4.1.6 Galvanized Steel Pipe, Less Than 3 Inches. ASTM A 120, standard weight.

4.1.7 Galvanized Steel Pipe for Fire Hose Risers. Steel pipe and fittings less than 3 inches in diameter shall be thoroughly cleaned of foreign material by wire brushing and solvent cleaning, and then given one coat of coal tar primer and two coats of coal tar enamel conforming to AWWA C203. Threaded ends of pipe and fittings shall be adequately protected prior to coating.

4.2 Joints.

4.2.1 Asbestos Cement Pipe. Rubber rings for joints shall conform to ASTM D 1869.

4.2.2 Cast Iron Pipe.

4.2.2.1 Mechanical Joints shall be of the stuffing box type and shall conform to ANSI A21.11.

4.2.2.2 Push-on Joints shall conform to ANSI A21.11.

4.2.2.3 Rubber Gaskets and Lubricant shall conform to the applicable requirements of ANSI A21.11.

4.2.3 Copper Tubing. Joints shall be compression-pattern flared and shall be made with fittings hereinafter specified.

4.2.4 Ductile Iron Pipe.

4.2.4.1 Mechanical Joints shall be of the stuffing box type and shall conform to ANSI A21.11 as modified by ANSI A21.51.

4.2.4.2 Push-On Joints shall conform to ANSI A21.51.

4.2.4.3 Rubber Gaskets and Lubricant shall conform to the applicable requirements of ANSI A21.11.

4.2.5 Plastic Pipe. Joints shall be as previously specified in the requirements for the pipe. Joints connecting pipes of differing materials shall be made in accordance with the manufacturers recommendations and as approved. Elastomeric gaskets shall be furnished by the manufacturer of the pipe or fitting involved.

4.2.6 Bonded Joints. Where indicated, a metallic bond shall be provided at each joint, including joints made with flexible couplings or rubber gaskets, or ferrous metallic piping to effect continuous conductivity. The bond wire shall be type RHW-USE, size 1/0 neoprene-jacketed copper conductor shaped to stand clear of the joint. The bond shall be of the thermal weld type.

4.2.7 Insulating Joints shall be installed between nonthreaded ferrous and nonferrous metallic pipe, fittings and valves. Insulating joints shall consist of a sandwich-type flange insulating gasket of the dielectric type, insulating washers, and insulating sleeves for flange bolts. Insulating gaskets shall be full faced with outside diameter equal to the flange outside diameter. Bolt insulating sleeves shall be full length. Units shall be of a shape to prevent metal-to-metal contact of dissimilar metallic piping elements.

4.2.8 Connections between asbestos cement pipe and cast iron fittings, valves or hydrants shall be made with jointing materials conforming to AWWA Standard C603.

4.3 Fittings and Specials.

4.3.1 For Asbestos Cement Pipe. Fittings and specials shall be cast iron, bell-end in accordance with ANSI A21.10, 150 p.s.i. pressure rating, except that profile of bell may have special dimensions as required by the pipe manufacturer. Cast iron fittings and specials shall be cement mortar lined in accordance with ANSI A21.4. Linings shall be standard thickness.

4.3.2 For Cast Iron Pipe. Fittings and specials shall be suitable for 150 p.s.i. pressure rating, unless otherwise specified. Fittings and specials for mechanical joint pipe shall conform to ANSI A21.10. Fittings and specials for use with push-on joint pipe shall conform to ANSI A21.10 and A21.11. Cast iron fittings and specials shall be cement mortar lined in accordance with ANSI A21.4. Linings shall be standard thickness.

4.3.3 For Copper Tubing. Fittings and specials shall be flared and shall conform to ANSI B16.26.

4.3.4 For Ductile Iron Pipe. Fittings and specials shall be suitable for 150 p.s.i. pressure rating, unless otherwise specified. Fittings and specials for mechanical joint pipe shall conform to ANSI A21.10. Fittings and specials for use with push-on joint pipe shall conform to ANSI A21.10 and A21.11. Fittings and specials shall be cement mortar lined in accordance with ANSI A21.4. Linings shall be standard thickness.

4.3.5 For Plastic Pipe.

4.3.5.1 For Pipe Less than 4-inch Diameter. Screw-joint conforming to ASTM D2464 and manufactured of material conforming to ASTM D1784, type 1120. Elastomeric-gasket bell and socket fittings with built-in stops, pipe ends tapered to fit the socket. Gaskets shall conform to ASTM D1869.

4.3.5.2 For Pipe 4-inch Through 12-inch Diameter. Fittings and specials shall be cast iron, bell end in accordance with ANSI A21.10, 150 psi pressure rating except that profile of bell may have special dimensions as required by the pipe manufacturer. Cast iron fittings and specials shall be mortar-lined in accordance with ANSI A21.4. Linings shall be standard thickness.

4.3.6 For Galvanized Steel Pipe for Fire Hose Risers. Steel fittings shall be galvanized. Screwed fittings shall conform to ANSI B16.3. Flanged fittings shall conform to AWWA C207. Dresser-type fittings shall be suitable for use with type of pipe furnished.

4.4 Couplings.

4.4.1 Dielectric Fittings shall be installed between threaded ferrous and nonferrous metallic pipe, fittings and valves, except where corporation stops join mains. Dielectric fittings shall prevent metal-to-metal contact of dissimilar metallic piping elements and shall be suitable for the required working pressure.

4.5 Valves.

4.5.1 Check Valves shall be designed for a minimum working pressure of 150 pounds per square inch or as indicated. Valves shall have a clear waterway equal to the full nominal diameter of the valve. Valves shall open to permit flow when inlet pressure is greater than the discharge pressure, and shall close tightly to prevent return flow when discharge pressure exceeds inlet pressure. Distinctly cast on the body of each valve shall be the manufacturer's name, or initials, or trademark by which he can be readily identified, and also the size of the valve, working pressure, and the direction of flow.

4.5.1.1 Valves 2 Inches and Smaller shall be all bronze designed for screwed fittings, and shall conform to Federal Specification WW-V-51, class B, type as suitable for the application.

4.5.1.2 Valves Larger Than 2 Inches shall be iron body, bronze mounted, shall have flanged ends, and shall be the non-slam type. Flanges shall be the 125-pound type conforming to ANSI B16.1.

4.5.2 Gate Valves shall be designed for a working pressure of not less than 150 pounds per square inch. Valve connections shall be as required for the piping in which they are installed. Valves shall have a clear waterway equal to the full nominal diameter of the valve, and shall be opened by turning counterclockwise. The operating nut or wheel shall have an arrow, cast in the metal, indicating the direction of opening.

4.5.2.1 Valves Smaller Than 3 Inches shall be all bronze and shall conform to Federal Specification WW-V-54, type I, class B.

4.5.2.2 Valves 3 Inches and Larger shall be iron body, bronze mounted, and shall conform to AWWA C500.

4.6 Valve Boxes shall be plastic, cast iron, or concrete, except that concrete boxes may be installed only in locations not subjected to vehicular traffic. Plastic and cast iron boxes shall be extension type with slide-type adjustment and with flared base. The minimum thickness of cast iron shall be 3/16 inch. The word "WATER" shall be cast in the cover. The boxes shall be of such length as will be adapted, without full extension, to the depth of cover required over the pipe at the valve location. Concrete boxes shall be the standard product of a manufacturer of precast concrete equipment. Plastic boxes shall be a standard catalog product of a manufacturer regularly engaged in the manufacture of valve boxes. Plastic boxes installed in paved areas, roadways and other areas subject to vehicular traffic shall be equipped with cast iron rings and covers. Plastic shall be a rigid combination of polyolefin and fibrous inorganic materials having the following physical properties:

	ASTM Method	Value
Tensile Strength (2.0 in. min.)	D-638	3,400 psi
Impact Strength, Izod	D-256	0.5 ft-lb/in
Shore-D Hardness	D-2240	63
Deflection Temp. @ 66 psi stress	D-648	230 degrees F
Specific Gravity	D-792	1.15

4.7 Fire hydrants shall conform to American Water Works Association Standard C502. Hydrants shall have a 6-inch bell connection, two 2-1/2-inch hose connections and one 4-1/2-inch pumper connection. Outlets shall have American National Standard fire-hose coupling threads. Working parts shall be bronze. Design, material, and workmanship shall be similar and equal to the latest stock pattern ordinarily produced by the manufacturer. Hydrants shall be painted with one coat of red lead paint and two finish coats of approved paint of the color directed. Hydrants shall be dry-barrel type conforming to AWWA C502 with valve opening at least 5 inches in diameter. Suitable bronze adapter for the 4-1/2-inch each outlet with caps, shall be furnished as directed.

4.8 Miscellaneous Items.

4.8.1 Service Clamps shall have a pressure rating not less than that of the pipe to be connected and shall be either the single or double flattened strap type. Clamps shall have a galvanized malleable iron body with cadmium plated straps and nuts. Clamps shall have rubber gasket cemented to the body.

4.8.2 Corporation Stops shall have standard corporation stop thread conforming to AWWA C800 on the inlet end, with flanged joints, compression pattern flared tube couplings, or wiped joints for connections to gooseneck.

4.8.3 Goosenecks. Copper tubing for gooseneck connections shall conform to the applicable requirements of ASTM B88, type K annealed. Length of connections shall be in accordance with standard practice.

4.8.4 Service Stops shall be water-works inverted-ground-key type, oval or round flow way, tee handle, without drain. Pipe connections shall be suitable for the type of service pipe used. All parts shall be of bronze with female iron-pipe-size connections or compression-pattern flared tube couplings, and shall be designed for a hydrostatic test pressure not less than 200 pounds per square inch.

4.8.5 Tapping Sleeves of the sizes indicated for connection to existing main shall be the cast iron, split-sleeve type with flange on the outlet, and with bolts, follower rings and gaskets on each end of the sleeve. Construction shall be suitable for a maximum working pressure of 150 pounds per square inch. Bolts shall have square heads and hexagonal nuts. Longitudinal gaskets, and mechanical joints with gaskets shall be as recommended by the manufacturer of the sleeve.

4.8.6 Service Boxes shall be cast iron or concrete. Extension service boxes of the required length and having either screw or slide-type adjustment shall be installed at all service box locations. The boxes shall have housings of sufficient size to completely cover the service stop and shall be complete with identifying covers.

4.8.7 Disinfection. Chlorinating materials shall conform to the following:

Chlorine, liquid. AWWA B301.

Hypochlorite, Calcium and Sodium. AWWA B300.

5. INSTALLATION.

5.1 Handling. Pipe and accessories shall be handled so as to insure delivery to the trench in sound, undamaged condition. Particular care shall be taken not to injure the pipe coating. If the coating or lining of any pipe or fitting is damaged, the repair shall be made by the Contractor at his expense in a satisfactory manner. No other pipe or material of any kind shall be placed inside a pipe or fitting after the coating has been applied. Pipe shall be carried into position and not dragged. Use of pinch bars and tongs for alining or turning pipe will be permitted only on the bare ends of the pipe. The interior of pipe and accessories shall be thoroughly cleaned of foreign matter before being lowered into the trench and shall be kept clean during laying operations by plugging or other approved method. Before installation, the pipe shall be inspected for defects. Material found to be defective before or after laying shall be replaced with sound material without additional expense to the Government. Rubber gaskets that are not to be installed immediately shall be stored in a cool and dark place.

5.2 Cutting of Pipe shall be done in a neat and workmanlike manner without damage to the pipe. Unless otherwise recommended by the manufacturer and authorized by the Contracting Officer, cutting shall be done with an approved type mechanical type mechanical cutter. Wheel cutters shall be used when practicable.

5.2.1 Copper Tubing shall be cut square and all burrs shall be removed.

5.3 Locating. Where the location of the water pipe is not clearly defined in dimensions on the drawings, the water pipe shall not be laid closer horizontally than 10 feet from a sewer except where the bottom of the water pipe will be at least 12 inches above the top of the sewer pipe, in which case the water pipe shall not be laid closer horizontally than 6 feet from the sewer. Where water lines cross under gravity-flow sewer lines, the sewer pipe for a distance of at least 10 feet each side of the crossing shall be fully encased in concrete or shall be made of pressure pipe with no joint located within 3 feet horizontally of the crossing. Water lines shall in all cases cross above sewage force mains or inverted siphons and shall be not less than 2 feet above the sewer main. Joints in the sewer main, closer horizontally than 3 feet to the crossing, shall be encased in concrete.

5.3.1 Water Lines shall not be laid in the same trench with sewer lines, gas lines, fuel lines, or electric wiring.

5.3.2 Copper Tubing shall not be installed in the same trench with ferrous piping materials.

5.3.3 Nonferrous Metallic Pipe. Where nonferrous metallic pipe, e.g., copper tubing, crosses any ferrous piping material, a minimum vertical separation of 12 inches must be maintained between pipes.

5.4 Joint Deflection.

5.4.1 Asbestos Cement Pipe. Maximum allowable deflections from a straight line or grade, as required by vertical curves, horizontal curves, or offsets, will be 5 degrees unless a lesser amount is recommended by the manufacturer.

5.4.2 Cast Iron Pipe and Ductile Iron Pipe. The maximum allowable deflection will be as given in AWWA C600. Table I shows maximum deflection for 18 foot lengths of pipe. For other lengths the deflection will vary proportionately.

TABLE I

DEFLECTION IN INCHES

Diameter in Inches	Push-On Joint Pipe	Mechanical-Joint Pipe
3	19	31
4	19	31

If the alinement requires deflection in excess of the above limitations, special bends or a sufficient number of shorter lengths of pipe shall be furnished to provide angular deflections within the limit set forth.

5.4.3 Plastic Pipe. Maximum offset in alinement between adjacent pipe joints shall be as recommended by the manufacturer and approved by the Contracting Officer but, in no case shall it exceed 5 percent.

5.5 Placing and Laying. Pipe and accessories shall be carefully lowered into the trench by means of derrick, ropes, belt slings, or other authorized equipment. Under no circumstances shall any of the water-line materials be dropped or dumped into the trench. Care shall be taken to avoid abrasion of the pipe coating. Except where necessary in making connections with other lines or as authorized by the Contracting Officer, pipe shall be laid with the bells facing in the direction of laying. The full length of each section of pipe shall rest solidly upon the pipe bed, with recesses excavated to accommodate bells, couplings, and joints. Pipe that has the grade or joint disturbed after laying shall be taken up and relaid. Pipe shall not be laid in water or when trench conditions are unsuitable for the work. Water shall be kept out of the trench until jointing is completed. When work is not in progress, open ends of pipe, fittings, and valves shall be securely closed so that no trench water, earth, or other substance will enter the pipes or fittings. Where any part of the coating or lining is damaged, the repair shall be made by the Contractor at his expense in a satisfactory manner. Pipe ends left for future connections shall be valved, plugged, or capped, and anchored, as shown.

5.5.1 Asbestos Cement Pipe shall be installed in accordance with AWWA C603, except as otherwise specified. Short lengths of pipe machined at each end or overall shall be used at fittings and rigid structures and for tying-in and closures.

5.5.2 Connections. Where connections are made between new work and existing mains, the connections shall be made by using specials and fittings to suit the actual conditions. Standard methods are available for making connections to various types of pipe, either under pressure or in the dewatered condition. Where made under pressure, these connections shall be installed as approved by the Contracting Officer.

5.5.3 Pipe Passing Through Walls of Valve Pits and Structures shall be provided with cast iron wall sleeves. Annular space between walls and sleeves shall be filled with rich cement mortar. Annular space between pipe and sleeves shall be filled with mastic.

5.6 Jointing.

5.6.1 Asbestos Cement Pipe. Couplings shall be installed in accordance with AWWA C603. Heavy couplings for service line connections, as hereinafter specified, shall be installed in accordance with the recommendations of the manufacturer.

5.6.2 Cast Iron Pipe.

5.6.2.1 Mechanical and Push-On Type Joints shall be installed in accordance with AWWA C600.

5.6.3 Copper Tubing. Joints shall be made with flared fittings. The flared end tube shall be pulled tightly against the tapered part of the fitting by a nut which is part of the fitting, so there is metal-to-metal contact.

5.6.4 Ductile Iron Pipe. Mechanical push-on type joints shall be installed in accordance with AWWA C600, modified as necessary by the recommendations of the manufacturer to provide for special requirements of ductile iron pipe.

5.6.5 Galvanized Steel Pipe. Screw joints shall be made tight with a stiff mixture of graphite and oil, inert filler and oil, or with an approved graphite compound, applied with a brush to the male threads only. Compounds shall not contain lead.

5.6.6 Plastic Pipe.

5.6.6.1 Pipe Less Than 4-inch Diameter. Threaded joints shall be made by wrapping the male threads with approved thread tape or applying an approved thread lubricant, then threading the joining members together. The joint shall be tightened using strap wrenches to prevent damage to the pipe and/or fitting. To avoid excessive torque, joints shall be tightened no more than two threads past hand-tight. Preformed rubber ring gaskets for bell and spigot joints shall be made in accordance with requirements of AWWA C600 and AWWA C603 as applicable, and as required herein. All pipe ends for push-on joints shall be beveled to facilitate assembly and marked to indicate when the pipe is fully seated. The gasket shall be prelubricated to prevent displacement. Care shall be exercised to assure the gasket and ring groove in the bell or coupling match. The manufacturer of the pipe or fitting must also supply the elastomeric-gasket. Couplings shall be provided with stops or centering rings to assure that the coupling is centered on the joint.

5.6.6.2 Pipe 4-inch Through 12-inch Diameter. Joints shall be elastomeric-gasket bell and spigot, as specified in AWWA C900. Joints utilizing or requiring solvent-cement will not be accepted. Jointing procedure shall be as specified for pipe less than 4-inch diameter with bell and spigot configuration utilizing elastomeric ring gasket.

5.6.7 Bonded Joints shall be installed in accordance with details specified in subparagraph Joints under paragraph MATERIALS.

5.6.8 Insulating Joints Dielectric Fittings shall be installed in accordance with details specified in subparagraph Joints under paragraph MATERIALS. Dielectric unions shall be encapsulated in a field poured coal tar covering, with at least 1/8-inch thickness of coal tar over all fitting surfaces.

5.6.9 Connections between different types of pipe and accessories shall be made with transition fittings approved by the Contracting Officer.

5.7 Service Lines. Service lines shall include the lines to and connections with the building service at a point approximately 5 feet outside the building where such building service exists. Where building services are not installed, the Contractor shall terminate the service lines approximately 5 feet from the site of the proposed building at a point designated by the Contracting Officer. Such service lines shall be closed with plugs or caps. All service stops and valves shall be provided with extension service boxes of the lengths required by the depth of service-line stops or valves. Service lines shall be constructed in accordance with the following requirements.

5.7.1 Service Lines 2 Inches and Smaller shall be connected to the main by a directly-tapped corporation stop or by a service clamp. A corporation stop and a lead or copper gooseneck shall be provided with either type of connection. Maximum sizes for directly-tapped corporation stops and for outlets with service clamps shall be as in table II:

TABLE II

SIZE OF CORPORATION STOPS AND OUTLETS

Pipe Size Inches	Corporation Stops, Inches: For cast iron pipe	Corporation Stops, Inches: For Asbestos cement pipe	Outlet w/Service Single & Double Straps
3	——	3/4	1
4	1	3/4	1
6	1-1/4	3/4	1-1/2
12 and larger	2	1	2

Where two or more gooseneck connections to the main are required for an individual service, such connections shall be made with standard branch connections. The total clear area of the branches shall be at least equal to the clear area of the service which they are to supply.

5.7.1.1 Connections To Asbestos Cement Mains. Heavy asbestos cement couplings may be utilized for connecting service lines smaller than 2 inches to new asbestos cement water mains. Couplings shall have factory threaded outlets. Threads may be either iron pipe thread or AWWA type. A corporation stop and a gooseneck shall be provided with the connection. Maximum sizes for outlets shall be as follows.

Pipe Size Inches	Outlet Sizes Inches
3 and 4	3/4, 1, 1-1/4

5.7.1.2 Service Lines 1-1/2 Inches and Smaller shall have a service stop.

5.7.1.3 Service Lines 2 Inches in size shall have a gate valve.

5.7.2 Service Lines Larger Than 2 Inches shall be connected to the main by a rigid connection and shall have either a rubber seated butterfly valve or a gate valve.

5.8 Field Coating and Lining of Pipe.

5.8.1 Galvanized Steel Pipe. Field joints shall be given one coat of coal tar primer and two coats of coal tar enamel conforming to AWWA C203. The tests of the coating shall conform to AWWA C203, and any flaws or holidays found in the coating of pipe and joints shall be repaired by patching or other approved means such that the repaired areas will be at least equal in thickness to the minimum coating required for the pipe.

5.9 Setting of Fire Hydrants and Valves and Valve Boxes.

5.9.1 Fire Hydrants shall be located where and installed as shown. Each hydrant shall be connected to the main with a 6-inch branch line having at least as much cover as the distribution main. Hydrants shall be set plumb with the pumper nozzle facing the roadway and with the center of the lowest outlet not less than 18 inches above the finished surrounding grade, and the operating nut not more than 48 inches above the finished surrounding grade. Except where approved otherwise, the backfill around hydrants shall be thoroughly compacted to the finished gradeline immediately after installation to obtain beneficial use of the hydrant as soon as practicable. The hydrant shall be set upon a slab of concrete not less than 4 inches thick and 15 inches square. Not less than 7 cubic feet of free draining broken stone or gravel shall be placed around and beneath the waste opening of dry barrel hydrants to insure drainage.

5.9.2 Valves and Valve Boxes shall be installed where shown or specified, and shall be set plumb. Valve boxes shall be centered on the valves. Boxes shall be installed over each outside gate valve unless otherwise shown. Where feasible, valves shall be located outside the area of roads and streets. Earth fill shall be carefully tamped around each valve box to a distance of 4 feet on all sides of the box, or to the undisturbed trench face if less than 4 feet.

5.9.3 Hydrants and Valves after delivery shall be drained to prevent freezing and shall have the interiors cleaned of all foreign matter before installation. Stuffing boxes shall be tightened and the hydrant or valve shall be fully opened and fully closed to insure that all parts are in working condition.

5.9.4 Service Boxes. Where water lines are located below paved streets having curbs, the boxes shall be installed directly back of the curbs. Where no curbing exists, service boxes shall be installed in accessible locations, beyond the limits of street surfacing, walks and driveways.

5.9.5 Check Valves shall be installed in valve pits as shown.

5.10 Water meters shall be installed as indicated.

5.11 Thrust Blocks. Plugs, caps, tees, and bends defecting 22-1/2 degrees or more, either vertically or horizontally, on water lines 6 inches in diameter or larger, and fire hydrants shall be provided with thrust blocking, or metal tie rods and clamps or lugs, as directed. Thrust blocking shall be concrete of a mix not leaner than 1 cement : 2-1/2 sand : 5 gravel, and having a compressive strength of not less than 2,000 p.s.i. after 28 days. Blocking shall be placed between solid ground and the hydrant or fitting to be anchored. Unless otherwise indicated or directed the base and thrust bearing sides of thrust blocks shall be poured directly against undisturbed earth. The sides of thrust blocks not subject to thrust may be poured against forms. The area of bearing shall be as shown or as directed. Blocking shall be placed so that the fitting joints will be accessible for repair. Steel rods and clamps shall be protected by galvanizing or by coating with bituminous paint.

6. HYDROSTATIC TESTS. Where any section of a water line is provided with concrete thrust blocking for fittings or hydrants, the hydrostatic tests shall not be made until at least 5 days after installation of the concrete thrust blocking unless otherwise approved. The method proposed for disposal of waste water from hydrostatic tests and disinfection shall be submitted to the Contracting Officer for approval prior to performing hydrostatic tests.

6.1 Pressure Test. After the pipe is laid, the joints completed, fire hydrants permanently installed, and the trench partially backfilled leaving the joints exposed for examination, the newly laid piping or any valved section of water distribution or water service piping shall, unless otherwise specified, be subjected for 1 hour to a hydrostatic pressure test of 200 pounds per square inch. Each valve shall be opened and closed several times during the test. Exposed pipe, joints, fittings, valves, and hydrants shall be carefully examined during the partially open trench test. Joints showing visible leakage shall be replaced or remade as necessary. Cracked or defective pipe, joints, fittings valves, or hydrants discovered in consequence of this pressure test shall be removed and replaced with sound material, and the test shall be repeated until the test results are satisfactory. The requirements for the joints to remain exposed for the hydrostatic tests may be waived by the Contracting Officer when one or more of the following conditions is encountered:

a. Wet or unstable soil conditions in the trench.

b. Compliance would require maintaining barricades and walkways around and across an open trench in a heavily used area that would require continuous surveillance to assure safe conditions.

c. Maintaining the trench in an open condition would delay completion of the contract.

d. An unforeseeable cause which would result in excess cost.

The Contractor may request the waiver, setting forth in writing the reasons for the request and stating the alternative procedure proposed to comply with the required hydrostatic tests. Backfill placed prior to the tests shall be placed in accordance with the requirements of section: EXCAVATION, TRENCHING, AND BACKFILLING FOR UTILITIES SYSTEMS. Piping and specials requiring replacement, as disclosed by the hydrostatic tests, and all work connected therewith, shall be at the Contractor's expense. All replacement and repair shall be without additional expense to the Government.

6.2 Leakage Test shall be conducted after the pressure test has been satisfactorily completed. The duration of each leakage test shall be at least 2 hours, and during the test the water line shall be subjected to 200 pounds per square inch pressure. Leakage is defined as the quantity of water to be supplied into the newly laid pipe, or any valved or approved section thereof, necessary to maintain the specified leakage test pressure after the pipe has been filled with water and the air expelled. No piping installation will be accepted until the leakage is less than the number of gallons per hour as determined by the formula.

$$L = 0.00054\ ND \quad P$$

in which L equals the allowable leakage in gallons per hour; N is the number of joints in the length of pipeline tested; D is the nominal diameter of the pipe in inches; and P is the average test pressure during the leakage test, in pounds per square inch gage. The allowable leakage in gallons per hour, per joint at 200 pounds per square inch average test pressure shall be as in table III.

TABLE III

ALLOWABLE LEAKAGE, LIMITS

Pipe diameter (inches)	Gallons per hour	Pipe diameter (inches)	Gallons per hour
2	0.0153	12	0.0915
3	0.0230	14	0.1070
4	0.0306	16	0.1225
6	0.0458	18	0.1375
8	0.0610	20	0.1530

Should any test of pipe disclose leakage greater than that specified in the foregoing table, the defective joints shall be located and repaired until the leakage is within the specified allowance, without additional cost to the Government.

6.3 Time For Making Test. Except for joint material setting or where concrete reaction backing necessitates a 5-day delay, pipelines jointed with rubber gaskets, lead, mechanical or push-on joints, or couplings may be subjected to hydrostatic pressure, inspected, and tested for leakage at any time after partial completion of backfill. Asbestos cement pipe and cement mortar lined pipe may be filled with water as recommended by the manufacturer before being subjected to the pressure test and subsequent leakage test.

6.4 Concurrent Hydrostatic Tests. The Contractor may elect to conduct the hydrostatic tests using either or both of the following procedures. Regardless of the sequence of tests employed, the results of pressure tests, leakage tests, and disinfection shall be satisfactory as specified. All replacement, repair, or retesting required shall be accomplished by the Contractor at no additional cost to the Government.

6.4.1 Pressure Test and Leakage Test may be conducted concurrently.

6.4.2 Hydrostatic Tests and Disinfection may be conducted concurrently, using the water treated for disinfection to accomplish the hydrostatic tests. If water is lost when treated for disinfection and air is admitted to the unit being tested, or if any repair procedure results in contamination of the unit, disinfection shall be reaccomplished.

7. DISINFECTION. Before acceptance of potable water operation, each unit of completed water distribution line water service line shall be disinfected as prescribed by AWWA C601. The unit will not be accepted until satisfactory bacteriological results have been obtained.

8. CLEANUP. Upon completion of the installation of the water distribution lines water service lines, and appurtenances, all debris and surplus materials resulting from the work shall be removed.

* * * * *

STANDARD DETAIL 198

CITY OF PHOENIX
ENGINEERING DEPARTMENT

8" C.I. FRAME AND COVER

APPROVED: J. E. Ottkey — CITY ENGINEER — DATE 11/15/71

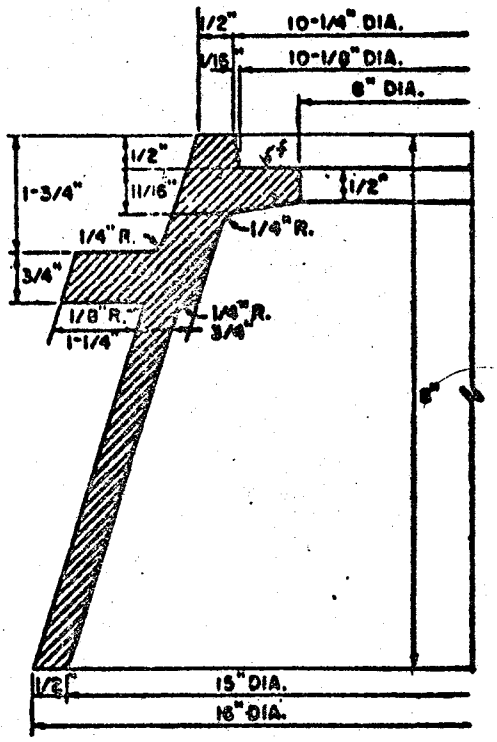

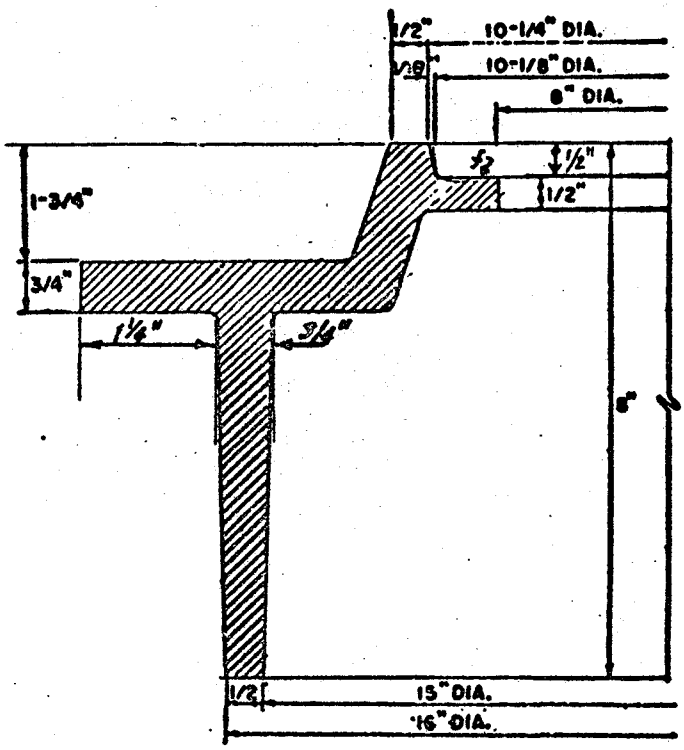

MINIMUM WEIGHT 63 LBS.

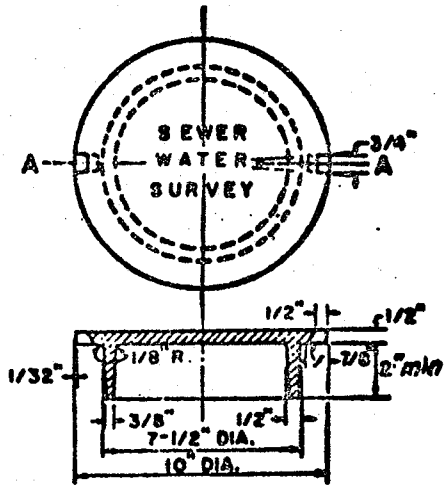

1/8" FILLETS COVER ONLY

COVER
SECTION A–A

MINIMUM WEIGHT 16 LBS.

LETTERS ON COVER TO BE AS FOLLOWS:
"SEWER", "WATER", OR "SURVEY" AS DIRECTED.
TOTAL WIDTH OF WORD "SEWER" OR "WATER" 3-3/4"
TOTAL WIDTH OF WORD "SURVEY" 4-1/2"
LETTER SIZE 5/8" X 3/4", RAISED 1/16"
ABOVE LEVEL OF COVER, TYPE OF LETTERS
TO BE SUBMITTED FOR APPROVAL.

REV. 11-71

NOT TO SCALE

STANDARD DETAIL 400

CITY OF PHOENIX

ENGINEERING DEPARTMENT

BLOCKING FOR WATER GATE VALVES

APPROVED [illegible] Oct 1, 1968 APPROVED [illegible] Oct. 1, 1968

CITY ENGINEER DATE WATER & SEWERS DIRECTOR DATE

867

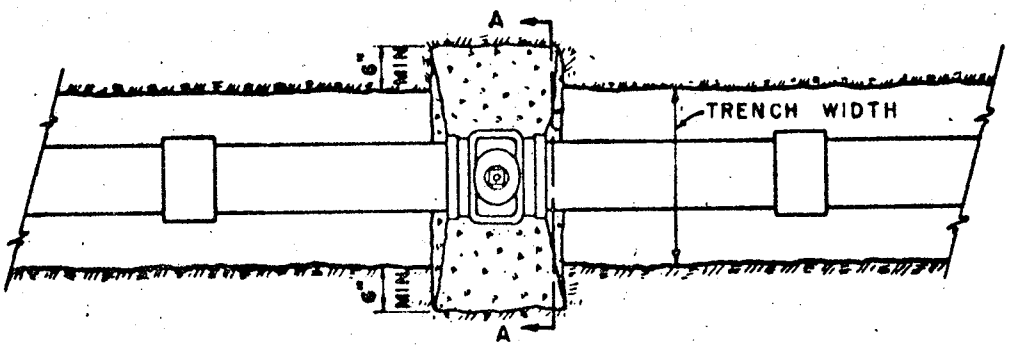

PLAN

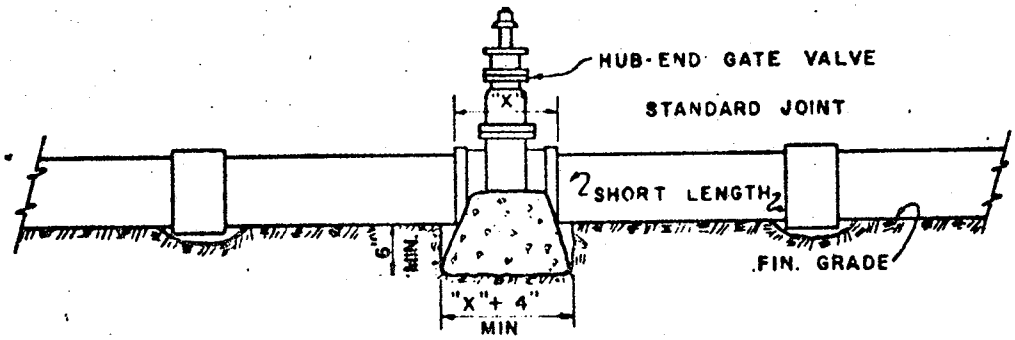

ELEVATION

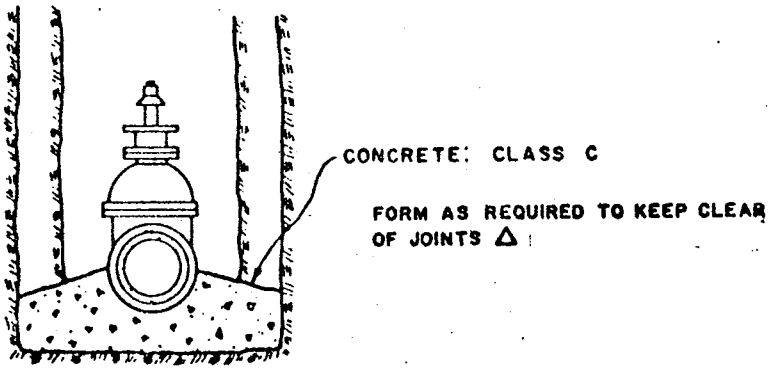

SECTION A-A

NOTE: THIS DETAIL COVERS WATER GATE VALVES, 4" TO 16", INCLUSIVE, REGARDLESS OF TYPE OF PIPE USED.

REV. 11/72 WF Δ
REV. 10-1-68

STANDARD DETAIL 401

CITY OF PHOENIX
PUBLIC WORKS DEPARTMENT
DIVISION OF ENGINEERING

BLOCKING FOR BUTTERFLY VALVES

APPROVED: [signature] CITY ENGINEER — DATE
APPROVED: [signature] WATER & SEWERS DIRECTOR — DATE 9-27-68

ECF

NOTES 1. THIS DETAIL COVERS BUTTERFLY VALVE INSTALLATION, 3"-12" INCLUSIVE, REGARDLESS OF TYPE OF PIPE OR JOINT USED.
2. VALVE BOX & COVER REQUIRED PER STD DETAILS 490 & 491.

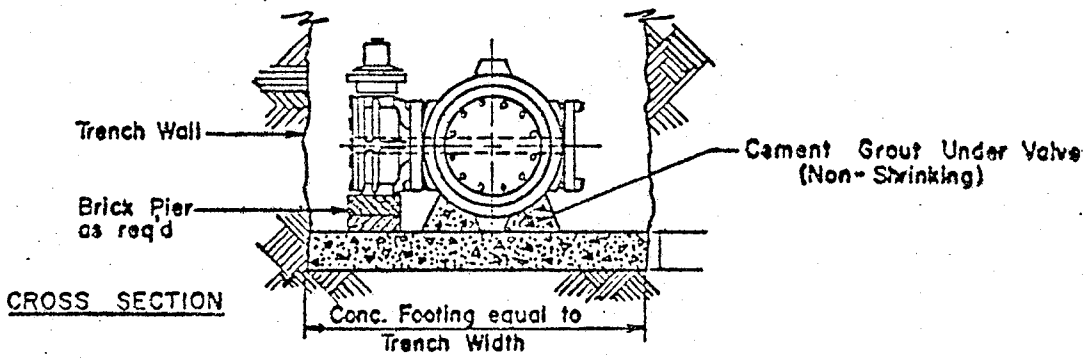

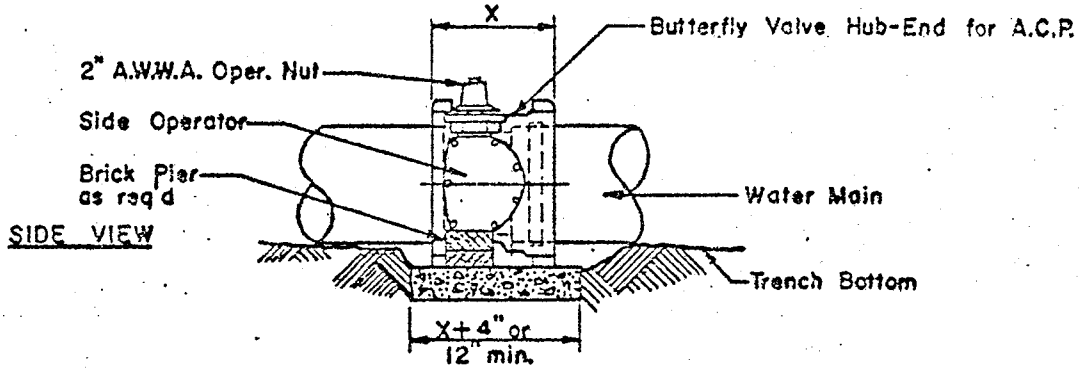

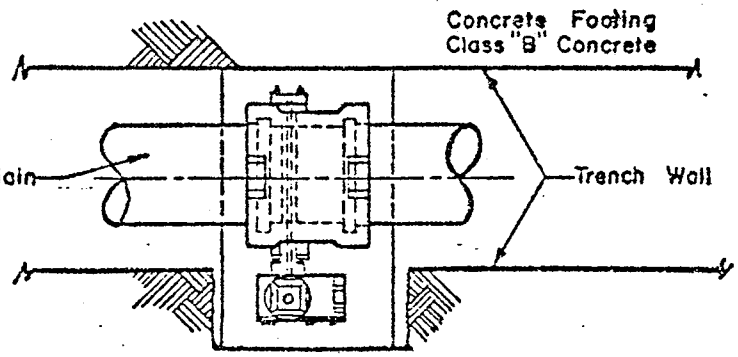

NEW 10-10-68

STANDARD DETAIL 413

CITY OF PHOENIX
PUBLIC WORKS DEPARTMENT
DIVISION OF ENGINEERING

CAST IRON WATER METER BOX COVER NO. 4

APPROVED: Sam Tucker 29 Aug 60 APPROVED: Dario Trevino 8-26-60
/CITY ENGINEER DATE WATER & SEWERS DIRECTOR DATE

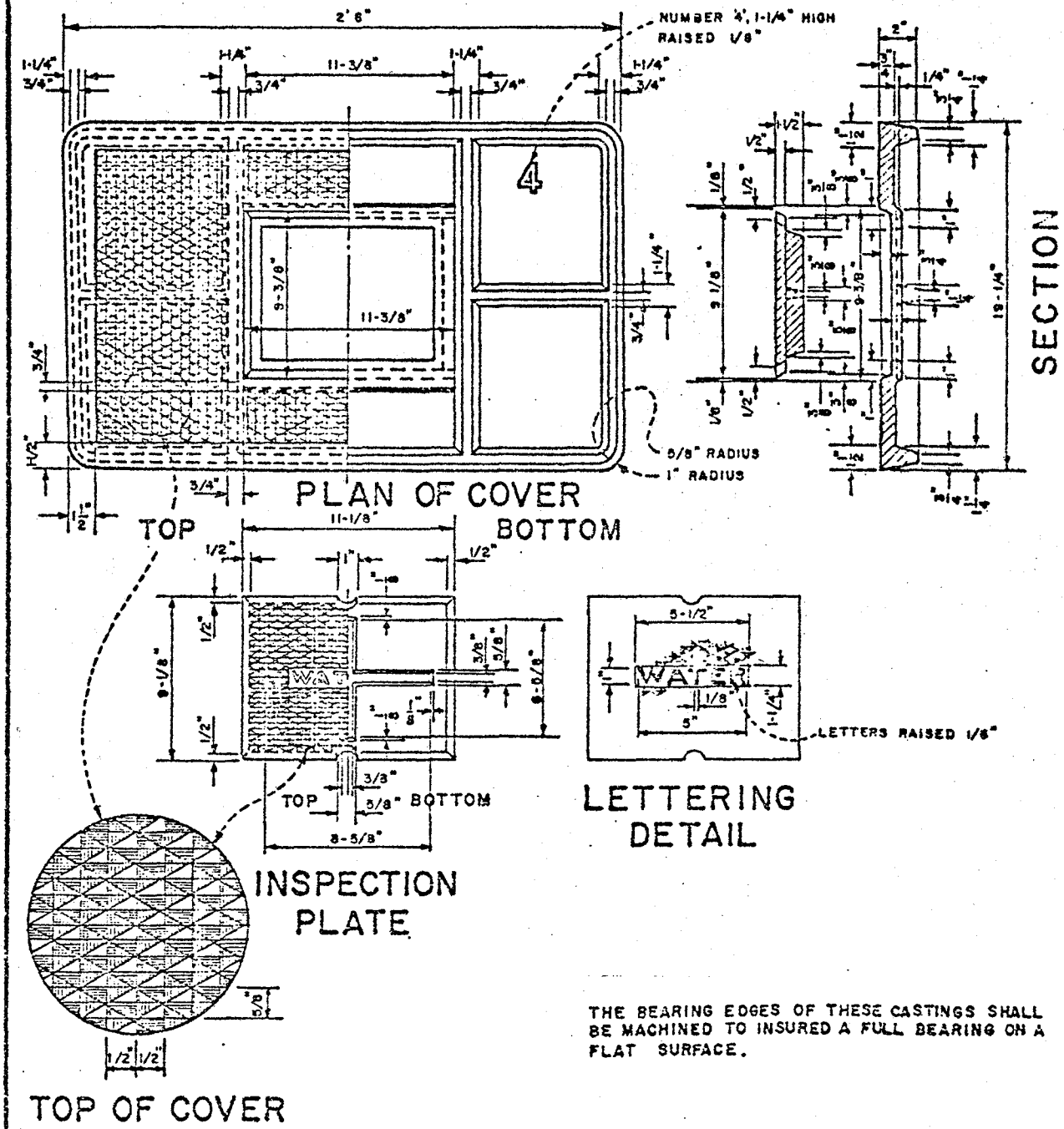

THE BEARING EDGES OF THESE CASTINGS SHALL BE MACHINED TO INSURED A FULL BEARING ON A FLAT SURFACE.

REV 4-60 EJL

STANDARD DETAIL 414

CITY OF PHOENIX
PUBLIC WORKS DEPARTMENT
DIVISION OF ENGINEERING

CAST IRON WATER METER BOX COVER
NO. 5

APPROVED: R. Fahnestock Oct. 1, 1968 APPROVED: Dario Gracianni Oct. 1, 1968
CITY ENGINEER DATE WATER & SEWERS DIRECTOR DATE

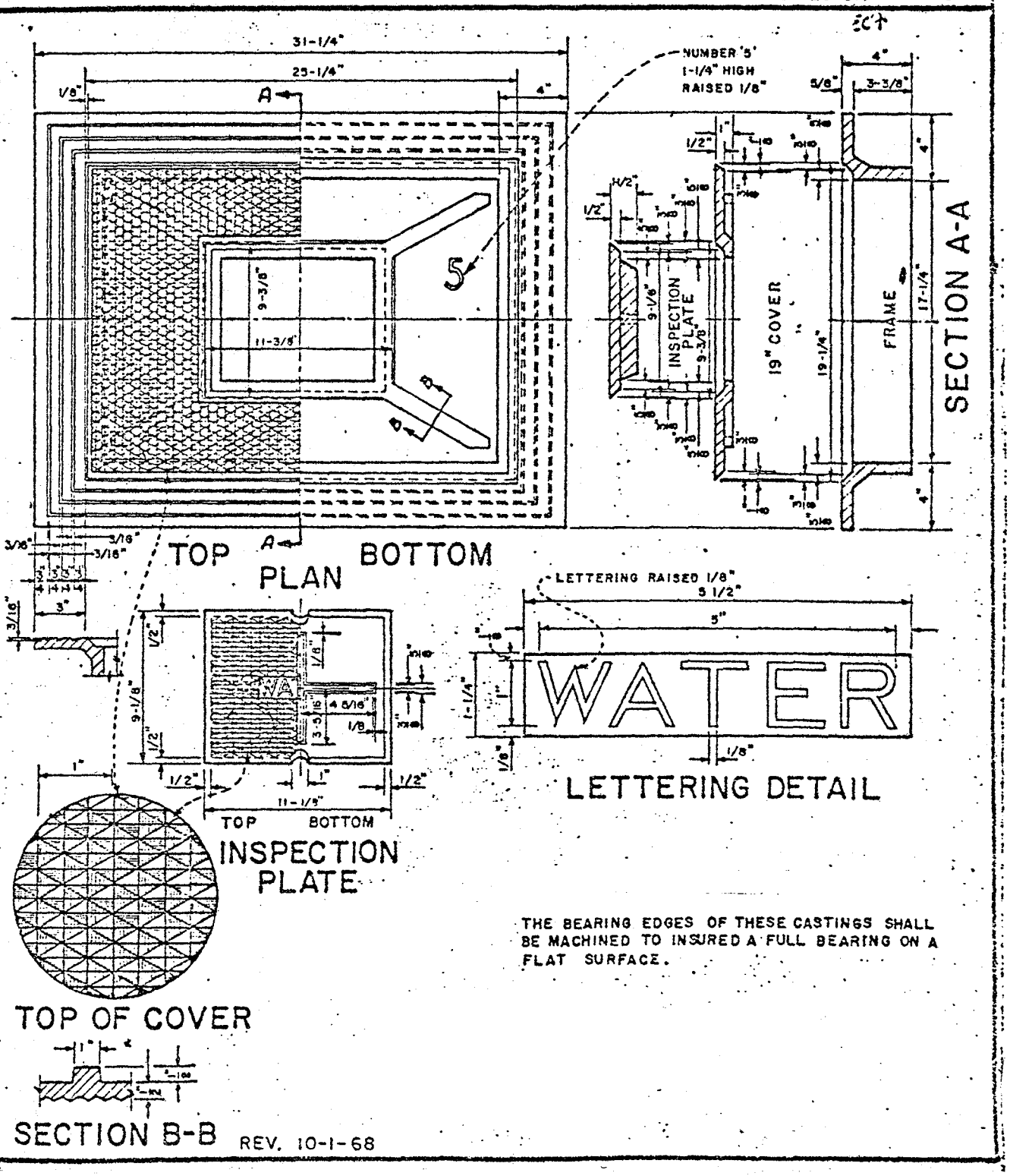

THE BEARING EDGES OF THESE CASTINGS SHALL BE MACHINED TO INSURED A FULL BEARING ON A FLAT SURFACE.

REV. 10-1-68

STANDARD DETAIL 423

CITY OF PHOENIX
PUBLIC WORKS DEPARTMENT
DIVISION OF ENGINEERING

CONCRETE WATER METER BOX NO.4

APPROVED [illegible] 8 APPROVED [illegible] 0 + 19
CITY ENGINEER DATE WATER & SEWERS DIRECTOR DATE

2" METERS

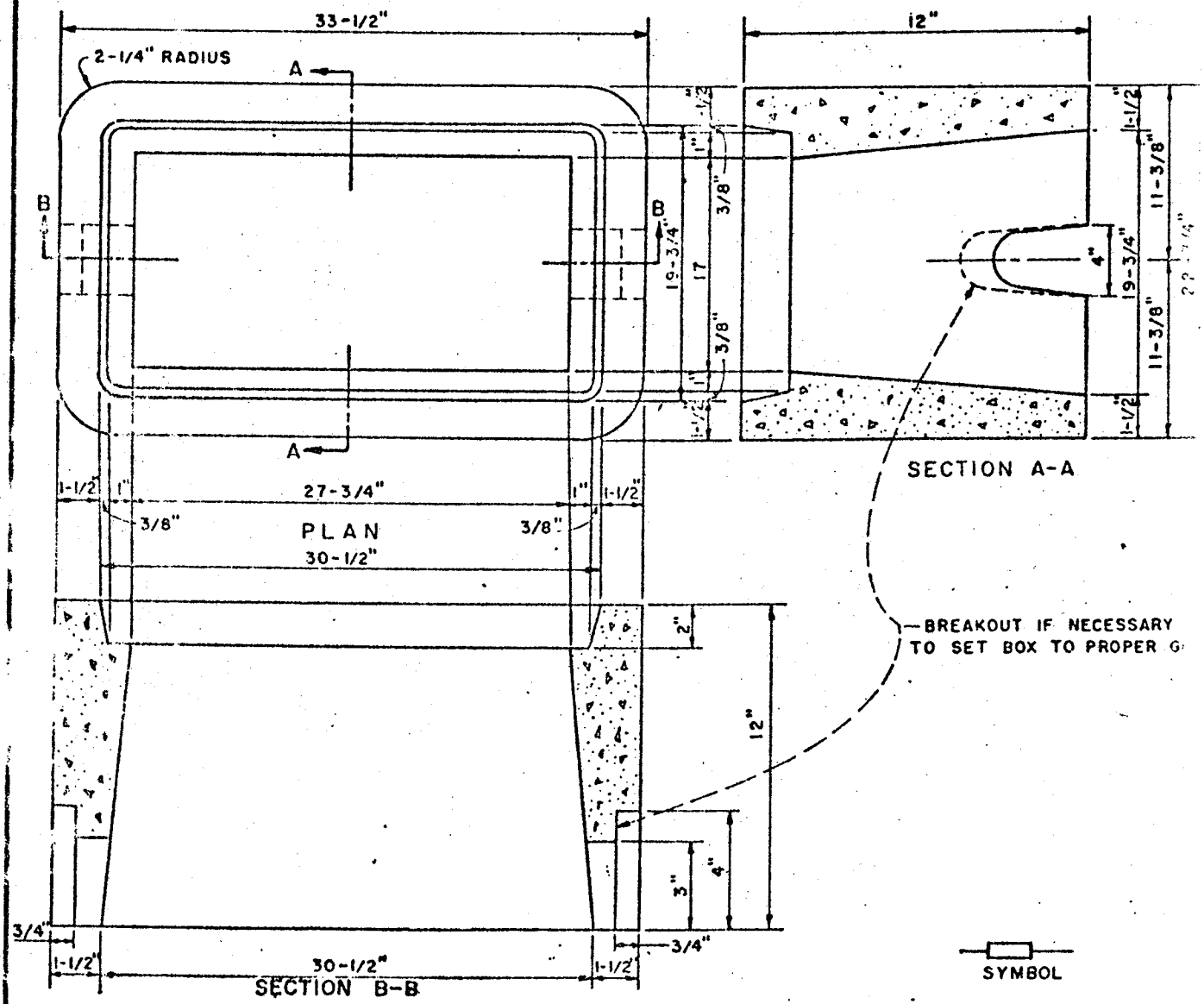

The meter boxes shall conform to the dimensions of the above drawing and shall be made of portland cement concrete poured and tamped (or vibrated) in true forms.

The portland cement concrete shall be batched in the proper proportions, by weight, of water, cement, fine aggregate (ASTM Des No. C-33), and coarse aggregate (-3 8" rock). This mix shall be designed to obtain a minimum of 5000 PSI at 28 days when tested in accordance with ASTM Desig. No. C-39. This mix shall be poured at a slump not in excess of 6".

Upon removal of the forms, the meter boxes shall be water cured for 7 days, or sprayed with a membrane curing compound such as Hunt's Process, or equal.

STANDARD DETAIL 430

CITY OF PHOENIX
PUBLIC WORKS DEPARTMENT
DIVISION OF ENGINEERING

FLEXIBLE JOINTS FOR ASBESTOS CEMENT PIPE

APPROVED: Sam Tucker 29 Aug 60 APPROVED: [illegible] 8-25-60
CITY ENGINEER DATE WATER & SEWERS DIRECTOR DATE

SHORT LENGTHS-SHALL BE USED AT ALL RIGID FITTINGS AND WHENEVER PIPE PASSES THROUGH A RIGID STRUCTURE. AT LEAST ONE RINGTITE OR FLUIDTITE COUPLING SHALL BE PLACED BETWEEN RIGID FITTINGS.

DIMENSION 'A'

4" & 6" PIPE	8" PIPE
3' 3" MAX.	6' 6" MAX.
1' 6" MIN.	1' 6" MIN.

RINGTITE OR FLUIDTITE MAXIMUM LENGTH MAY BE 13'.

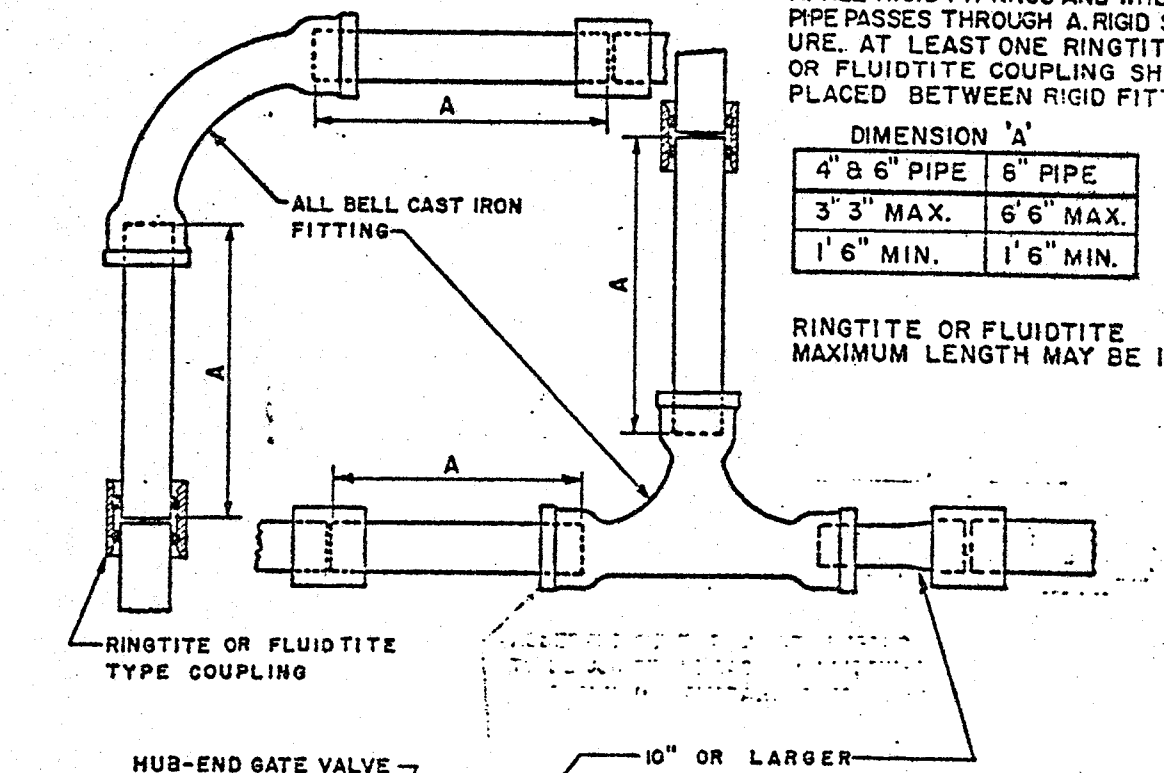

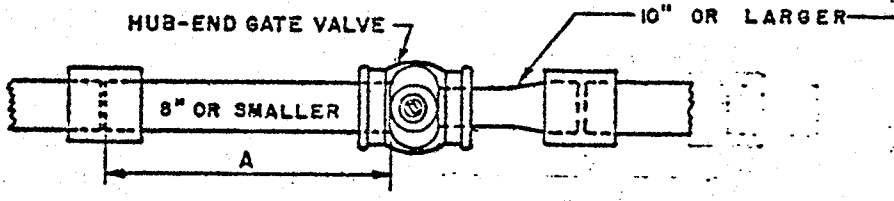

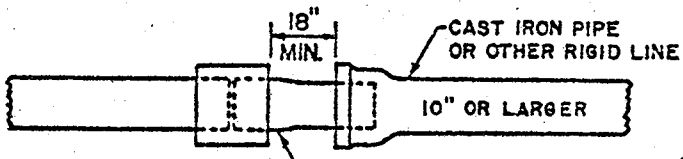

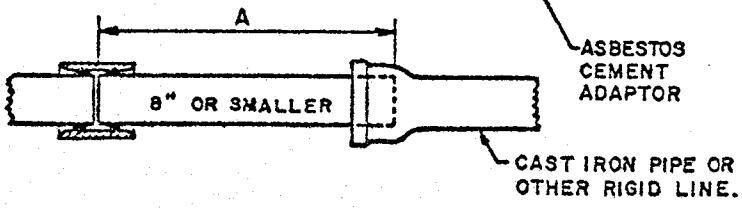

LEAD JOINTS

FOR 6" CLASS 150 & 200 ONLY MACHINED PIPE MAY BE INSERTED INTO FITTINGS.

8" CLASS 150 STANDARD PIPE MAY BE INSERTED INTO FITTINGS.

10" & UP AND CLASS 200 USE ADAPTORS AS RECOMMENDED BY PIPE MANUFACTURER.

REV EJL 6-60

STANDARD DETAIL 440

CITY OF PHOENIX

ENGINEERING DEPARTMENT

INSTALLING TAPPING SLEEVES AND VALVES

APPROVED: [illegible] Oct 1, 1968 APPROVED: [illegible] Oct. 1, 1968

CITY ENGINEER DATE WATER & SEWERS DIRECTOR DATE

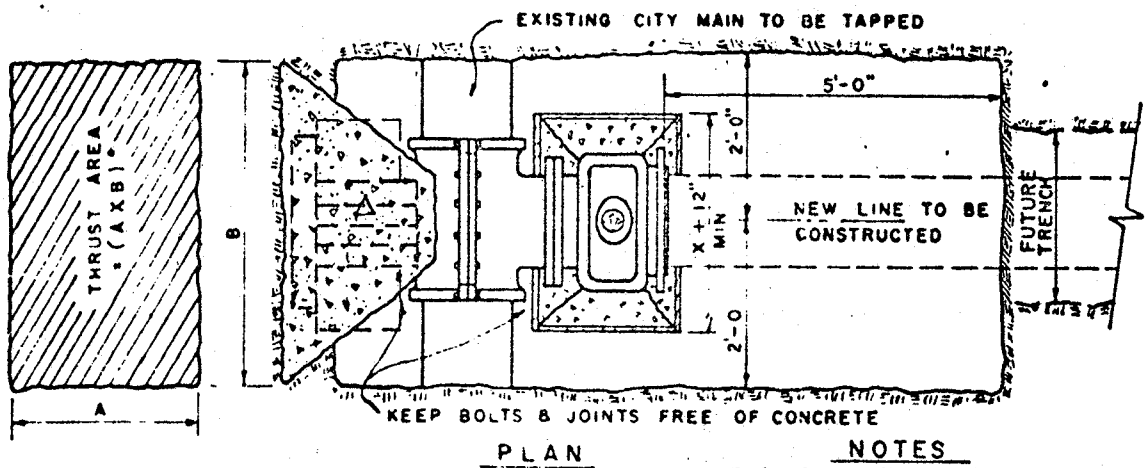

PLAN

CONCRETE: CLASS C

CURE 24 HR. MIN. BEFORE BACKFILLING △

OPTIONAL BLOCKING - 2" x 8" x 12" SOLID CONCRETE MASONRY UNITS AS INDICATED. △

NOTES

1. BLOCKS ARE TO EXTEND TO UNDISTURBED GROUND.
2. ALL TAPS SHALL BE MADE BY CITY CREWS AT PREVAILING RATES.
3. INSTALL PERMANENT BLOCKING UNDER VALVE BEFORE TAP IS MADE. ALL FLANGE BOLTS SHALL BE CLEAR OF FOOTING.

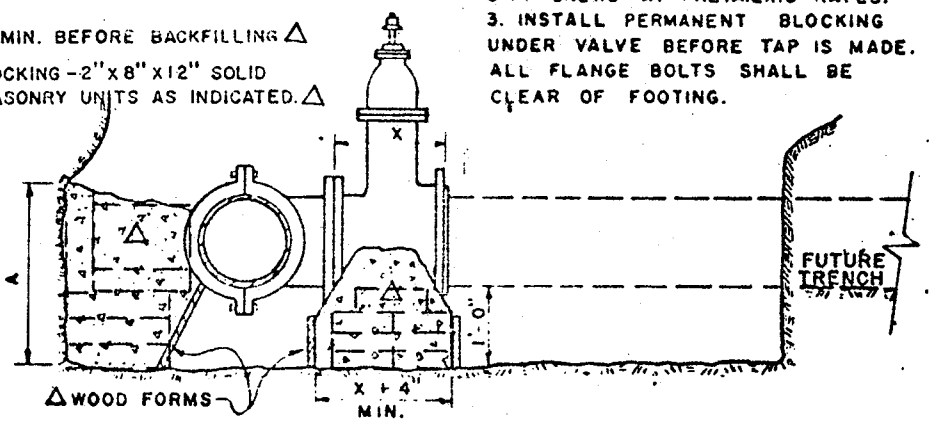

ELEVATION

SIZE OF PIPE BEING CONNECTED	* MINIMUM THRUST AREA REQUIRED EQUALS (A X B)
4" & LESS	3 SQUARE FEET
6"	4 " "
8"	6 " "
10"	9 " "
12"	13 " "
16"	23 " "

4. CONTRACTOR SHALL EXCAVATE AS SHOWN AND SHALL SET TAPPING SLEEVE AND VALVE, TIGHTEN ALL BOLTS, AND CALK AND LEAD AS A STANDARD JOINT PRIOR TO REQUESTING CITY TO MAKE TAP.
5. TAPPING SLEEVE TO BE PLACED A MINIMUM OF 18" FROM ANY BELL, COUPLING, VALVE, OR OTHER OBSTRUCTION.

SYMBOL

EV. 11/72 WF △
EV. 10-1-68

STANDARD DETAIL 445

CITY OF PHOENIX

ENGINEERING DEPARTMENT

VAULT FOR 3" & 4" METERS

APPROVED J. E. Otterbery 5/26/73 APPROVED [illegible] 6/26/73

CITY ENGINEER DATE WATER & SEWERS DIRECTOR DATE

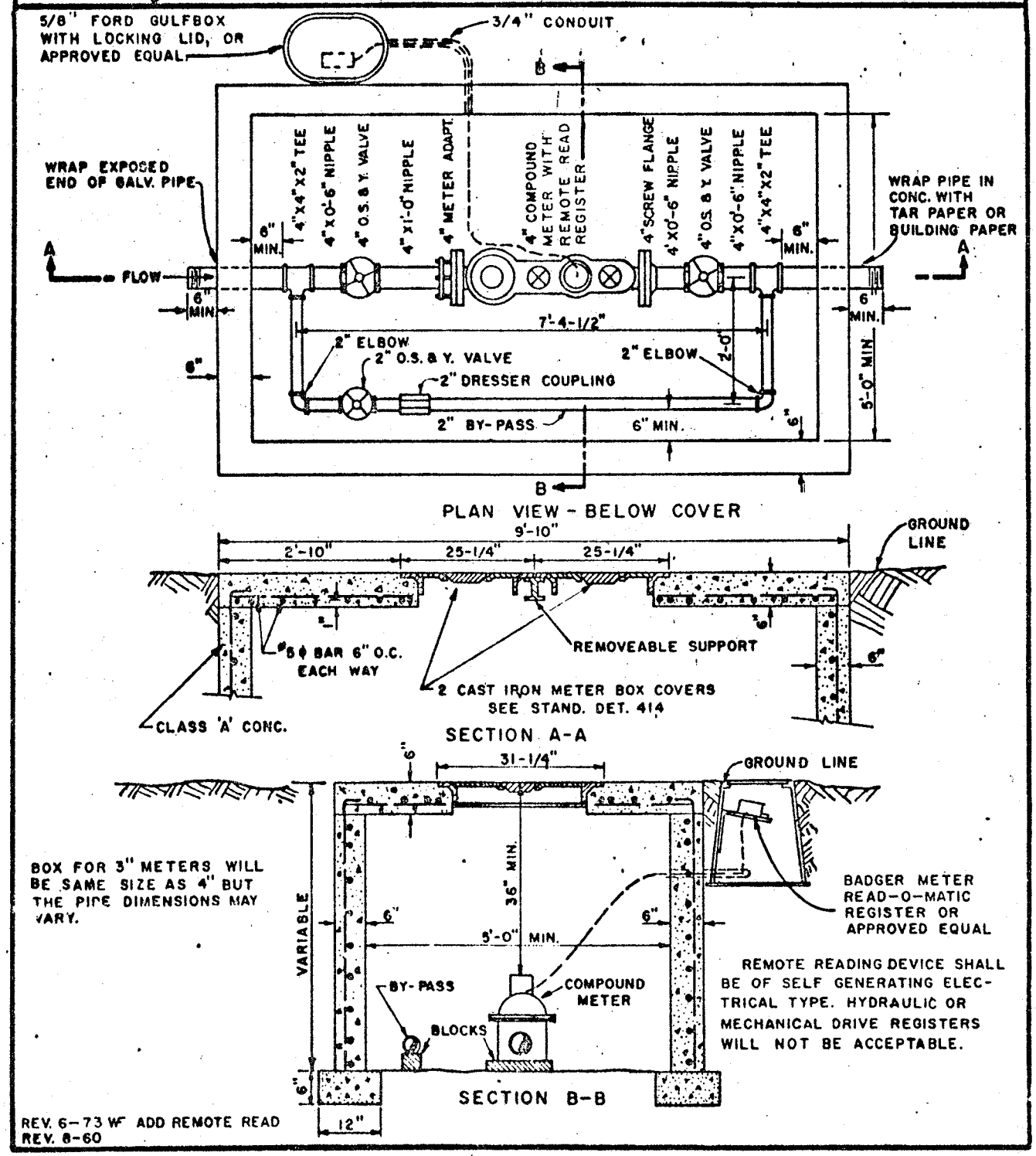

BOX FOR 3" METERS WILL BE SAME SIZE AS 4" BUT THE PIPE DIMENSIONS MAY VARY.

REMOTE READING DEVICE SHALL BE OF SELF GENERATING ELECTRICAL TYPE. HYDRAULIC OR MECHANICAL DRIVE REGISTERS WILL NOT BE ACCEPTABLE.

REV. 6-73 WF ADD REMOTE READ
REV. 8-60

STANDARD DETAIL 447

CITY OF PHOENIX, ARIZONA
ENGINEERING DEPARTMENT

WATER SERVICE CONNECTIONS USING SERVICE SADDLE

APPROVED _____ CITY ENGINEER — 2-1-71 DATE — APPROVED _____ WATER & SEWERS DIRECTOR — DATE

FOR 3/4" OR 1" (ONE INCH) WATER SERVICE CONNECTIONS TO SMALLER THAN 6" WATER MAINS OR ON MAJOR OR COLLECTOR STREETS.

NOTE
1. THIS DETAIL IS APPLICABLE TO BOTH AUTHORIZED CITY PERSONNEL OR DEVELOPERS' CONTRACTORS.
2. ALL TAPS ON PIPE LOCATED IN MAJOR STREETS OR COLLECTOR STREETS OR TAPS ON PIPE SMALLER THAN 6" MUST BE MADE BY USING EITHER A SERVICE SADDLE OR A HEAVY DUTY TAPPED COUPLING AS SHOWN.
3. IF CONTRACTOR IS TO TAP THE MAIN AND INSTALL WATER SERVICES THEY SHALL INCLUDE THE SERVICE SADDLE, CORP. STOP, SERVICE PIPE, APPURTENANT FITTINGS, CURB STOP, METER BOX & COVER.
4. WHERE ALL OR PART OF A NEW SUBDIVISION IS SERVED BY EXISTING CITY WATER MAINS ONLY AUTHORIZED PERSONNEL OF THE CITY WATER AND SEWERS DEPARTMENT SHALL INSTALL THE SERVICE CONNECTIONS.

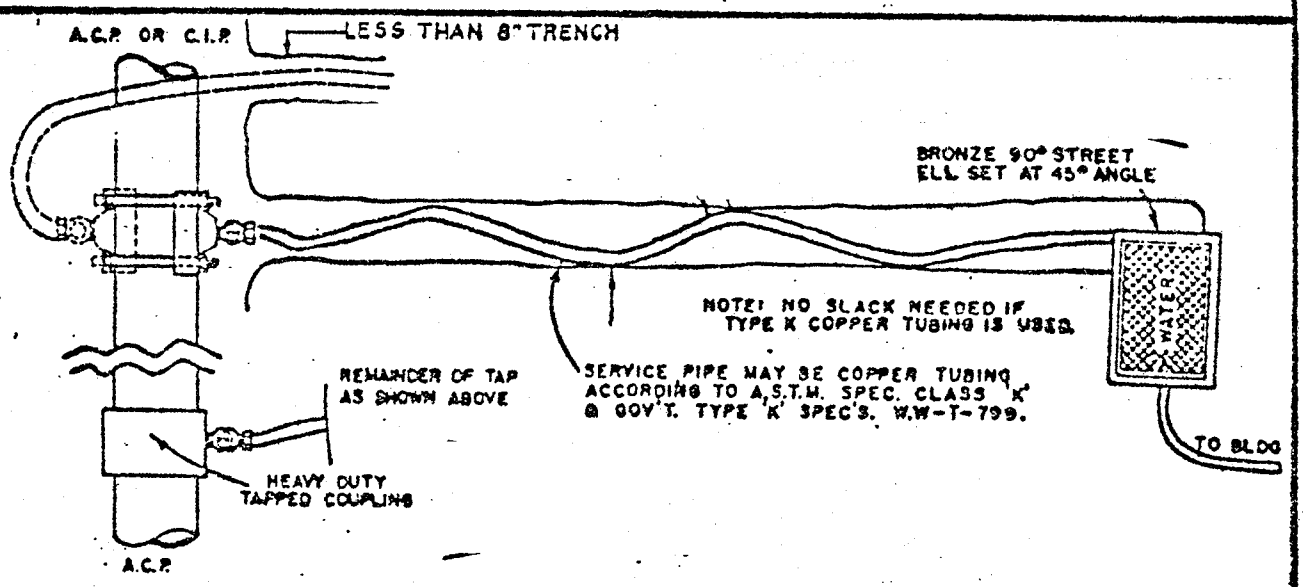

PLAN VIEW

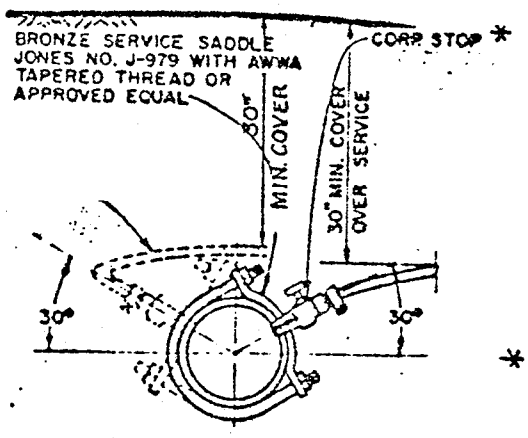

NOTE: IF MAIN IS CAST IRON OR DUCTILE IRON AND SERVICE IS COPPER PIPE, A DIELECTRIC INSULATOR IS REQUIRED AS SHOWN ON DETAIL 449

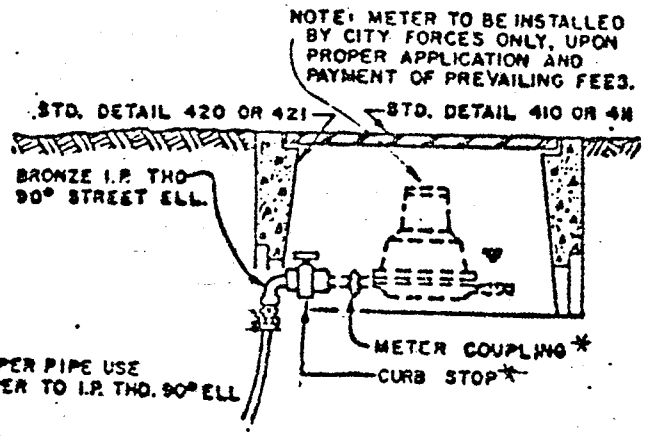

* FOR COPPER PIPE USE COPPER TO I.P. THD. 90° ELL

*SEE STD. DETAIL NO. 452 FOR APPROVED STOPS, COUPLINGS, ADAPTERS ETC.

PROFILE VIEW

FEB. 1971 REV.* 5-73

STANDARD DETAIL 449

CITY OF PHOENIX, ARIZONA
ENGINEERING DEPARTMENT

WATER SERVICE CONNECTION
USING COPPER SERVICE PIPE

APPROVED J. E. Atteberry 2-1-71 APPROVED Dario Travaini
CITY ENGINEER DATE WATER & SEWERS DIRECTOR DATE

FOR 3/4" OR 1" (ONE INCH) WATER SERVICE CONNECTIONS TO 6" OR LARGER WATER MAINS

NOTE
1. THIS DETAIL IS APPLICABLE TO BOTH AUTHORIZED CITY PERSONNEL OR DEVELOPERS' CONTRACTORS.
2. ALL TAPS ON PIPE LOCATED IN MAJOR STREETS OR COLLECTOR STREETS OR TAPS ON PIPE SMALLER THAN 6" MUST BE MADE BY USING EITHER A SERVICE SADDLE OR A HEAVY DUTY TAPPED COUPLING AS SHOWN ON STANDARD DETAIL 447
3. IF CONTRACTOR IS TO TAP THE MAIN AND INSTALL WATER SERVICES THEY SHALL INCLUDE THE CORP. STOP, SERVICE PIPE, APPURTENANT FITTINGS, CURB STOP, METER BOX AND COVER.
4. A SHARP TAPPING BIT MUST BE USED IN ORDER TO OBTAIN CLEAN SHARP THREADS. IN GENERAL, EACH TAPPING TOOL SHOULD BE RE-SHARPENED OR DISCARDED AFTER MAKING SIX TAPS.
5. WHERE ALL OR PART OF A NEW SUBDIVISION IS SERVED BY EXISTING CITY WATER MAINS, ONLY AUTHORIZED PERSONNEL OF THE CITY WATER AND SEWERS DEPARTMENT SHALL INSTALL THE SERVICE CONNECTIONS.

DIRECT TAP

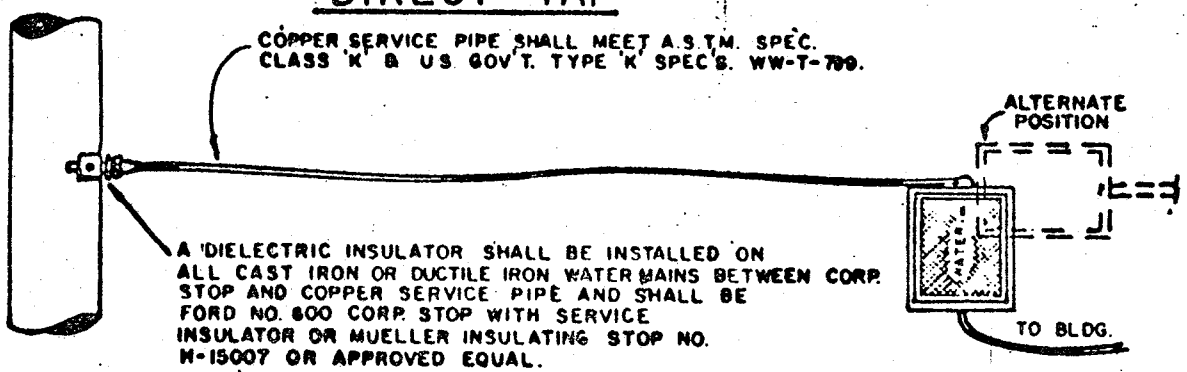

PLAN VIEW

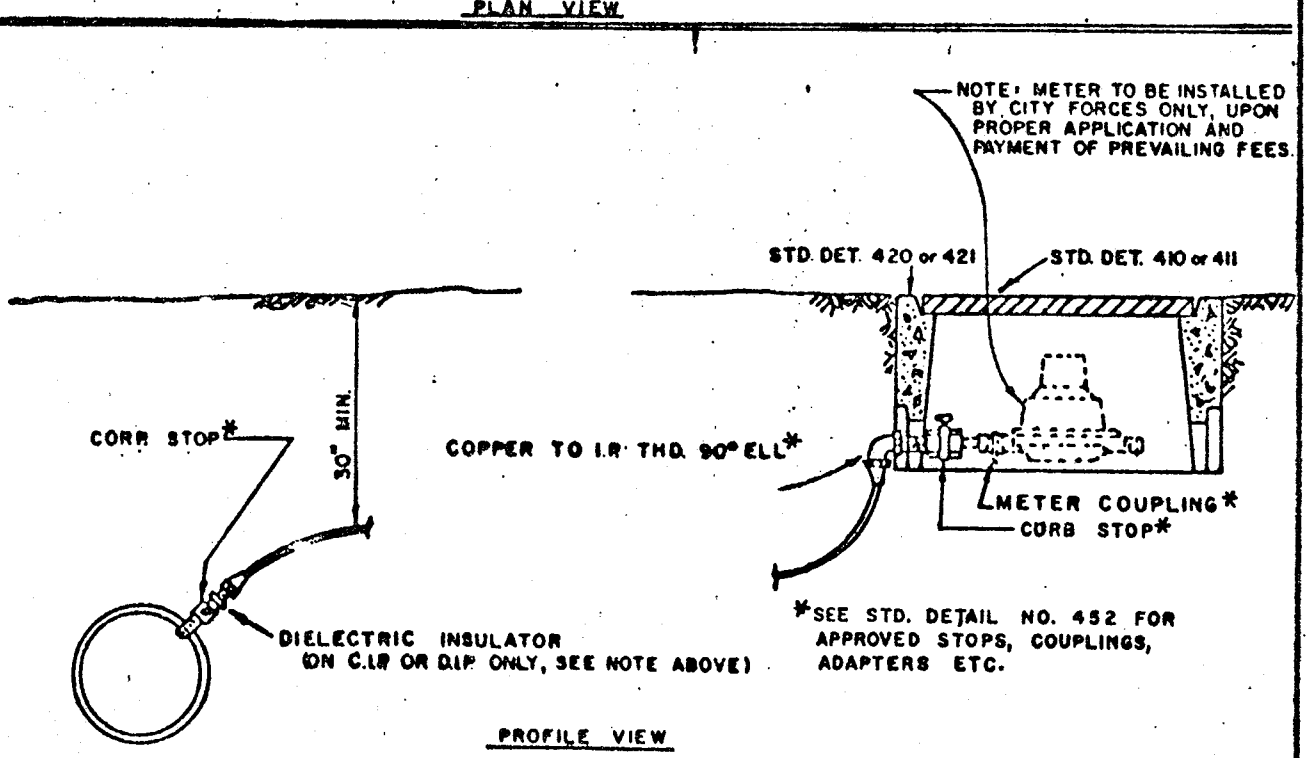

PROFILE VIEW

REVISED* 5-73 WF FEB. 1971

STANDARD DETAIL 450

CITY OF PHOENIX
ENGINEERING DEPARTMENT

WRAPPED GALV. SERVICE TAP

3/4" AND 1"

APPROVED: CITY ENGINEER — DATE — APPROVED: WATER & SEWERS DIRECTOR — DATE

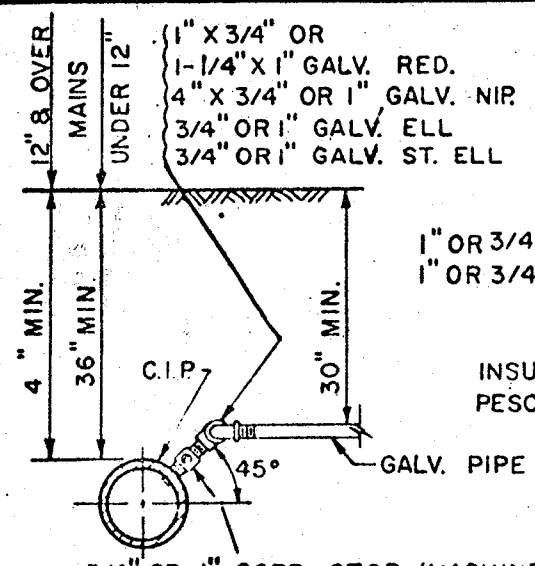

..3/4" OR 1" CORP. STOP (MACHINE THREAD)
MUELLER NO. 10003, JONES NO. J-89
OR APPROVED EQUAL

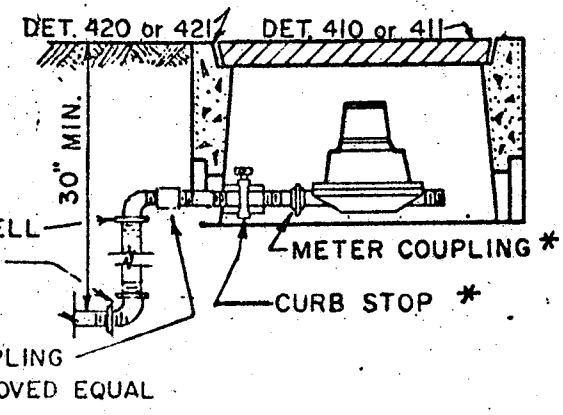

*SEE STD. DETAIL NO. 452 FOR APPROVED STOPS, COUPLINGS ETC.

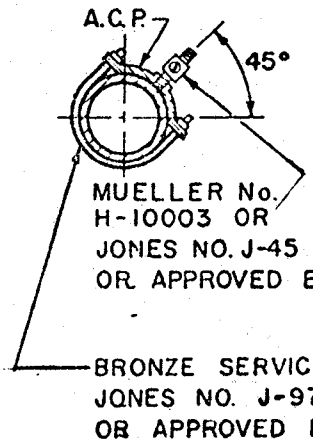

TAP SIZES PERMITTED FOR DIRECT TAPS

PIPE SIZE	SIZE OF TAP, CIP	SIZE OF TAP ACP
3" & 4"	NONE	NONE (SEE NOTES 4 & 5)
6"	1" AND SMALLER	1" & SMALLER, NOTE 5
8"	1-1/2" & SMALLER	1-1/2" & SMALLER, NOTE 5
10" & 12"	2" AND SMALLER	2" & SMALLER, NOTE 5

NOTES

1. EXTENSIONS MUST BE MADE WITH WRAPPED GALV. PIPE.
2. GALV. PIPE AND FITTINGS TO BE WRAPPED IN ACCORDANCE WITH STANDARD SPECIFICATION 655
3. METER SERVICE TAPS SHALL INCLUDE ALL FITTINGS FROM THE WATER MAIN TO THE CURB STOP INCLUDING METER BOX.
4. ALL ASBESTOS CEMENT PIPE LESS THAN 6" MUST HAVE A DOUBLE STRAP BRONZE SERVICE OR HEAVY DUTY TAPPED COUPLING.
5. ALL ASBESTOS CEMENT PIPE ON MAJOR AND COLLECTOR STREETS MUST HAVE A DOUBLE STRAP BRONZE SERVICE SADDLE OR HEAVY DUTY TAPPED COUPLING.

REDRAWN 11-72 WF

NOT TO SCALE

STANDARD DETAIL 452

CITY OF PHOENIX
ENGINEERING DEPARTMENT

APPROVED WATER SERVICE COMPONENTS

5/21/73

APPROVED _____ 6/25/73 APPROVED _____
CITY ENGINEER DATE WATER & SEWERS DIRECTOR DATE

NOTE: APPROVALS SHOWN ARE NOT NECESSARILY EXCLUSIVE. IF APPROVAL OF A SIMILAR DEVICE, BELIEVED TO BE COMPARABLE AND EQUAL IS DESIRED, A REQUEST SHOULD BE SUBMITTED SUPPORTED BY APPROPRIATE INFORMATION AND DATA.
IF GENERAL APPROVAL IS DESIRED, REQUEST SHOULD BE SUBMITTED DIRECTLY TO THE WATER AND SEWERS DIRECTOR.
IF APPROVAL FOR A SPECIFIC PROJECT IS DESIRED, REQUEST SHOULD BE MADE THROUGH THE INSPECTION SECTION, FIELD ENGINEERING DIVISION, CITY ENGINEERING DEPARTMENT

ECF

CORPORATION STOPS

MANUFACTURER	PLASTIC SERVICES	COPPER SERVICES	W/ DIELECTRIC INSULATION
FORD	F-1001	F-600	F-1000
HAYES		5200	
JONES	J-3402	J-1500	
McDONALD		4701	
MUELLER	H-15005	H-15000	H-15007

ADAPTERS

MANUFACTURER	IPS-POLYETHYLENE	IPS-COPPER, ELL
FORD	C-86-33	L-28-33
	C-86-44	L-28-44
HAYES		5628
JONES	J-2606	J-1550
MUELLER	H-15426	H-15530
McDONALD		9032

MANUFACTURER	CURB STOPS *	METER COUPLINGS
FORD	B-11-333, B-11-666	SPM-2R
	B-11-444, B-11-777	
JONES	J-1900	J-130
		J-134
McDONALD	6101	4622 OR 4624
MUELLER	H-10283	H-10890
	H-10291	H-10891
HAYES	4000	5680 OR 5682

* HEADS OF ALL CURB STOPS SHALL BE DRILLED 1/4" Ø FOR LOCKS.

Rev. 10-74 W.M.K.

NOT TO SCALE

STANDARD DETAIL 460

CITY OF PHOENIX

ENGINEERING DEPARTMENT

METHOD OF SETTING FIRE HYDRANT IN PARKWAY WITH WATER MAIN

APPROVED: Sam Tucker 29 AUG 60 APPROVED: [illegible] 8-26-60

CITY ENGINEER — DATE — WATER & SEWERS DIRECTOR — DATE

NOTE: ALL JOINTS IN FIRE HYDRANT ASSEMBLY TO BE OF CAULKED LEAD OR MECHANICAL JOINT PER A.S.A.-A 21.11.

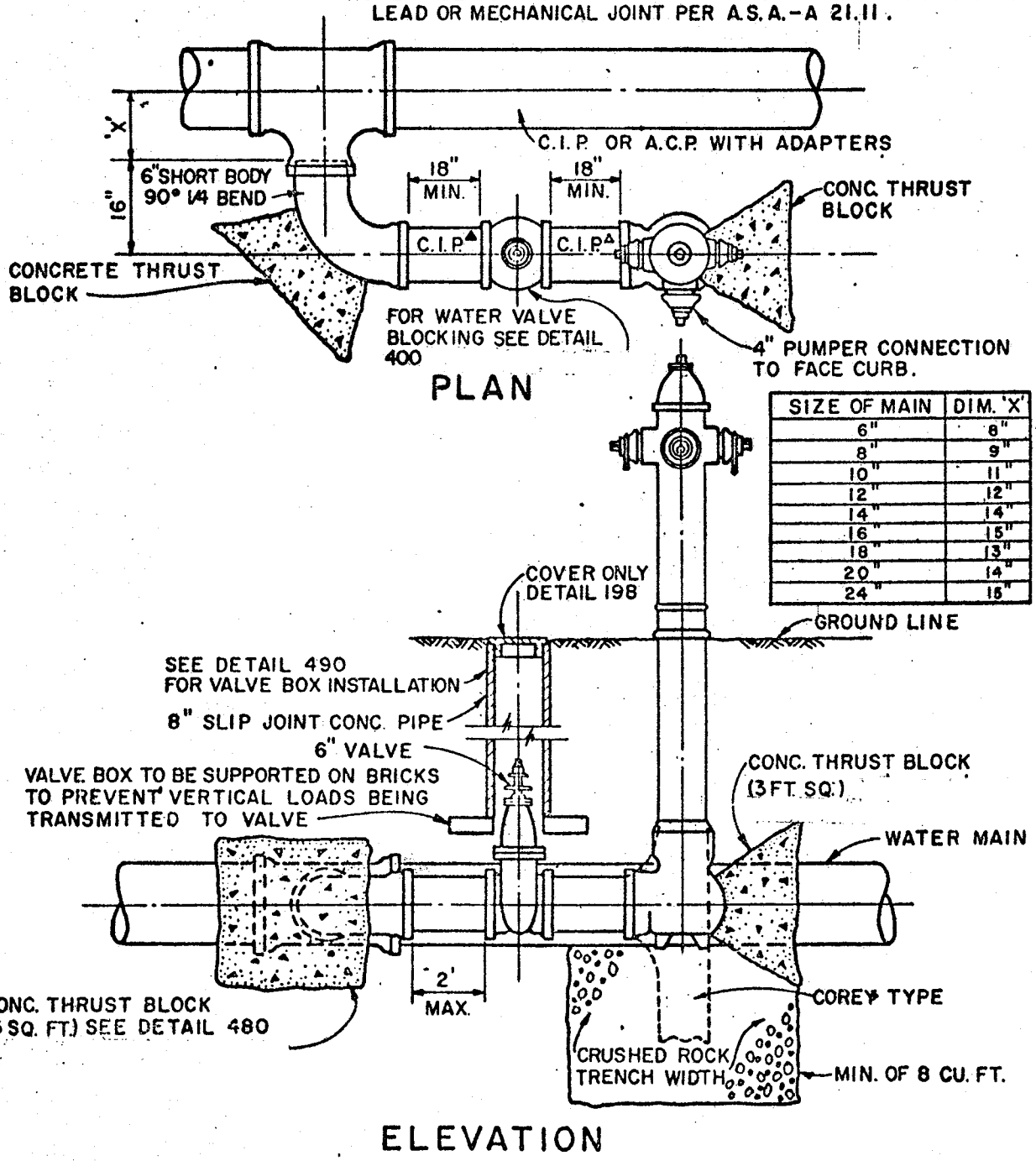

SIZE OF MAIN	DIM. 'X'
6"	8"
8"	9"
10"	11"
12"	12"
14"	14"
16"	15"
18"	13"
20"	14"
24"	15"

REV WF 4-73 Δ
REV 8-60

STANDARD DETAIL 465

CITY OF PHOENIX
ENGINEERING DEPARTMENT

FIRE HYDRANTS THREADS
2-1/2" & 4"

APPROVED: [illegible] 10/25/74 APPROVED: [illegible] 9/5/74
CITY ENGINEER DATE WATER & SEWERS DIRECTOR DATE

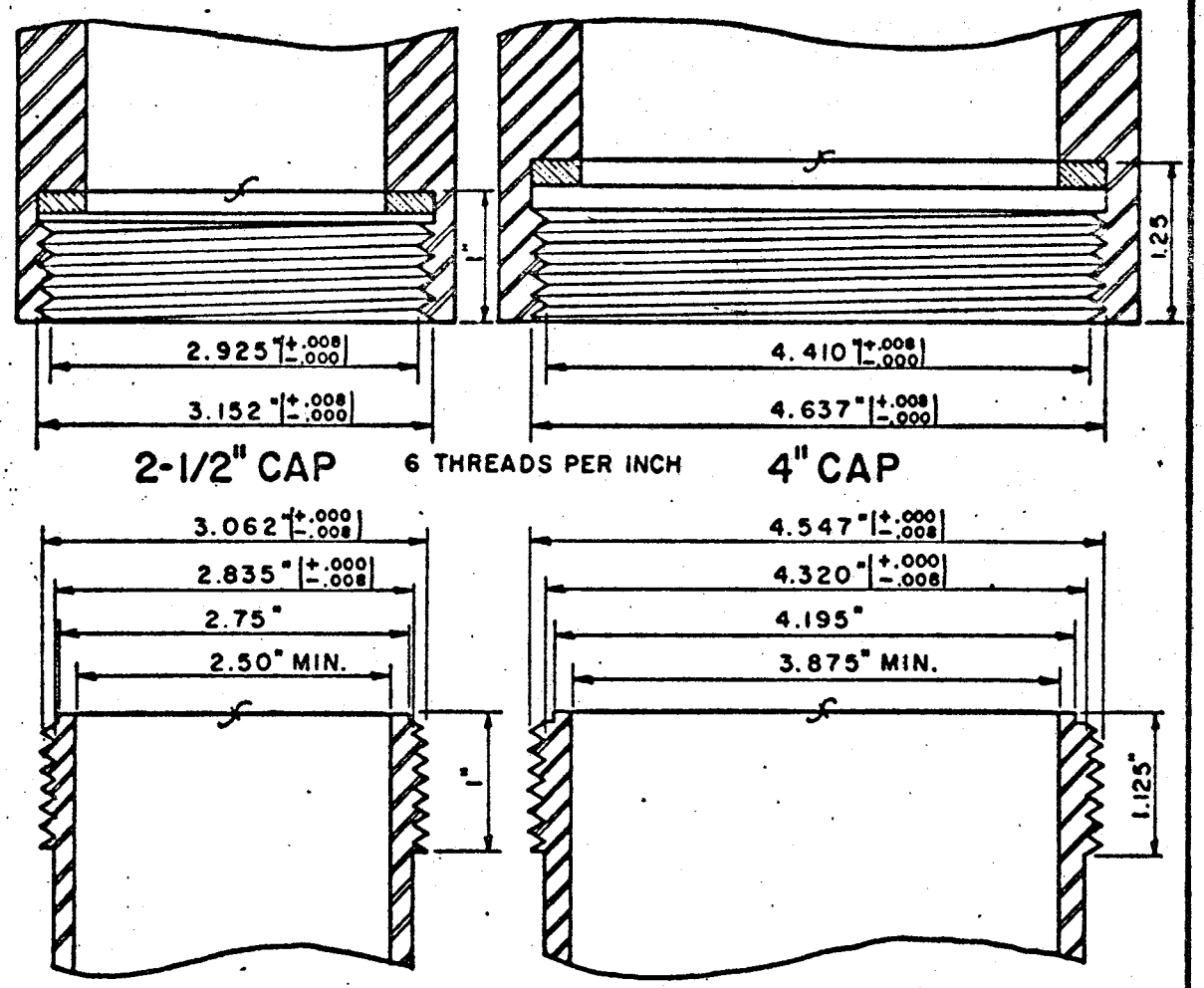

ALLOWABLE TOLERANCE ( )

STANDARD DETAIL 480

CITY OF PHOENIX

ENGINEERING DEPARTMENT

THRUST BLOCKS FOR WATER LINES

APPROVED: [illegible signature] Oct. 1, 1968 APPROVED: [illegible signature] Oct. 1, 1968

CITY ENGINEER — DATE — WATER & SEWERS DIRECTOR — DATE

NOTE: Thrust blocks are to extend to undisturbed ground.

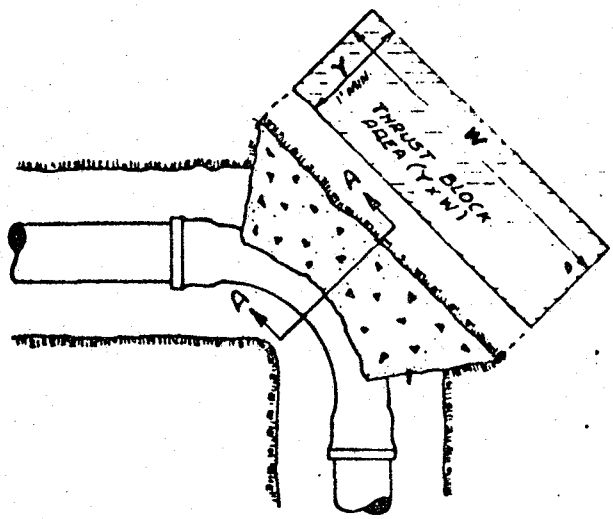

Use class 'C' concrete

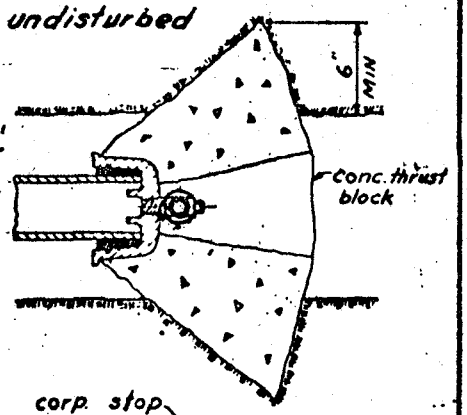

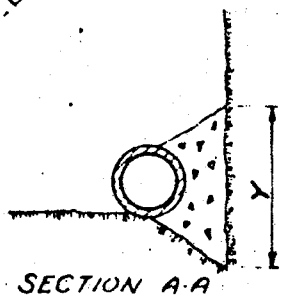

SECTION A-A

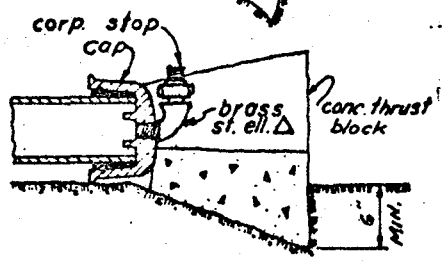

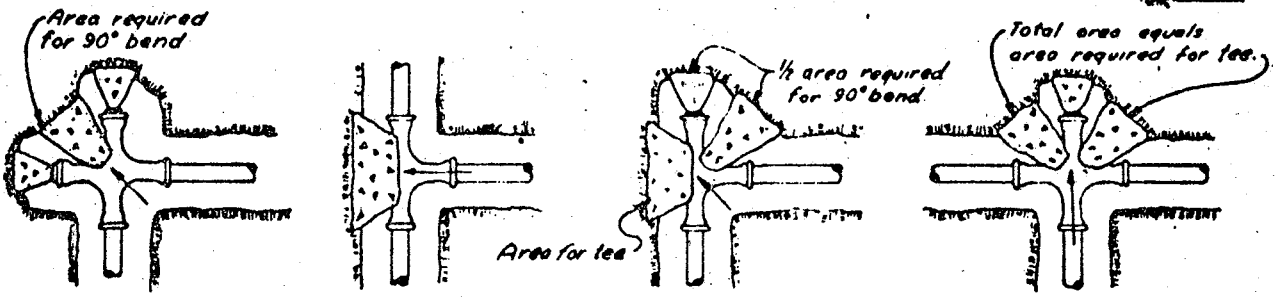

Typical Locations of Thrust Blocks

MINIMUM THRUST BLOCK AREA REQUIRED (Y x W)

PIPE SIZE	WATER PIPE	
	Tee, Deadend, 90° Bend	45° & 22½° Bends
4" & Less	3 Sq feet	3 Sq feet
6"	4 " "	3 " "
8"	6 " "	3 " "
10"	9 " "	5 " "
12"	13 " "	7 " "
16"	23 " "	12 " "

NOTES:

1. Table is based on 3,000#/sq. ft. soil. If conditions are found to indicate soil bearing is less, the areas shall be increased accordingly.
2. Areas for pipe larger than 16" shall be calculated for each project.
3. Form all non-bearing vertical surfaces △

REV. 11/72 △
REV. 10-1-68

STANDARD DETAIL 489

CITY OF PHOENIX
PUBLIC WORKS DEPARTMENT
DIVISION OF ENGINEERING

CURB STOP WITH VALVE BOX & COVER

APPROVED: [illegible] Oct 1, 1968 APPROVED: [illegible] Oct 1, 1968
CITY ENGINEER DATE WATER & SEWERS DIRECTOR DATE

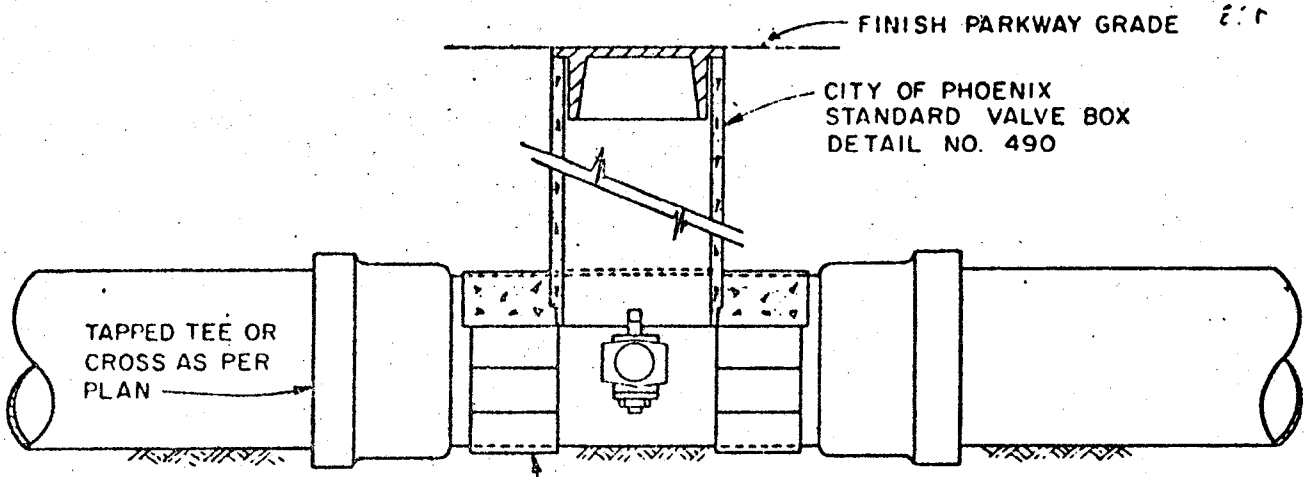

TYPE B

VALVE BOX TO BE SUPPORTED ON BRICKS TO PREVENT VERTICAL LOADS FROM BEING TRANSMITTED TO SMALL PIPE.

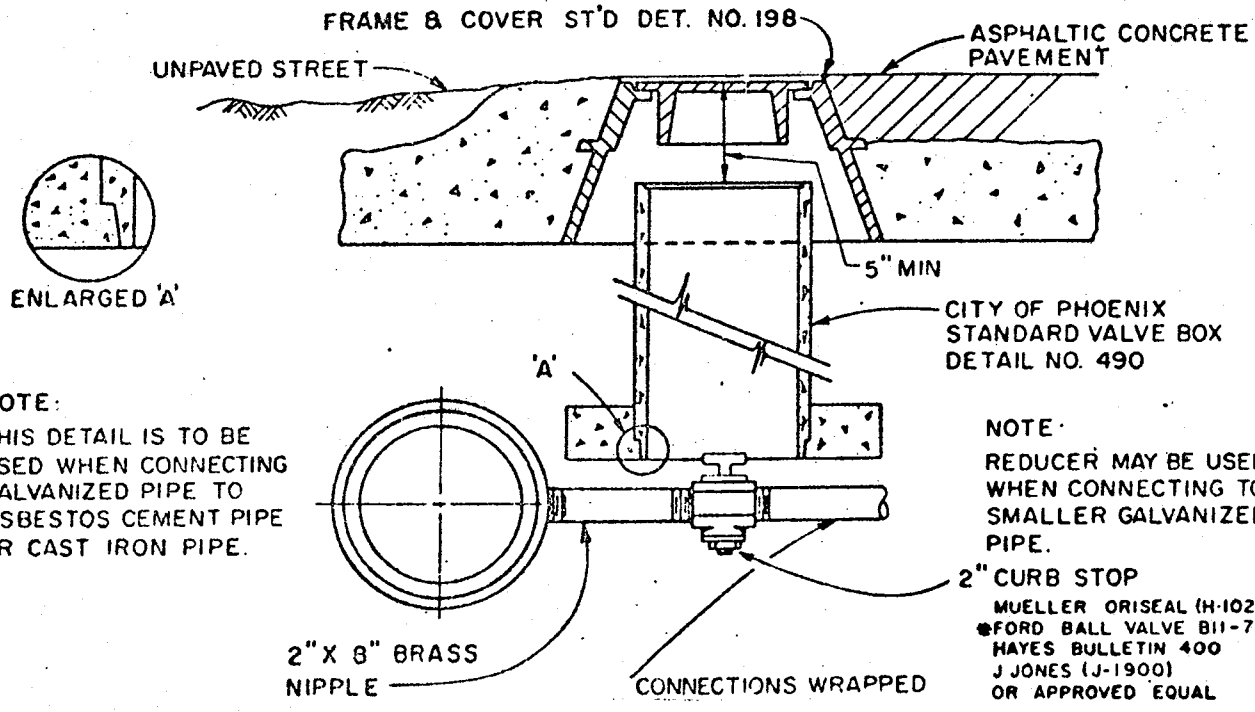

NOTE:
THIS DETAIL IS TO BE USED WHEN CONNECTING GALVANIZED PIPE TO ASBESTOS CEMENT PIPE OR CAST IRON PIPE.

NOTE:
REDUCER MAY BE USED WHEN CONNECTING TO SMALLER GALVANIZED PIPE.

TYPE A

REV. 9-1-71*
NEW 10-1-68

STANDARD DETAIL 490

CITY OF PHOENIX

ENGINEERING DEPARTMENT

VALVE BOX INSTALLATION

APPROVED [illegible] Oct 1, 1968 APPROVED [illegible] Oct 1 1968

CITY ENGINEER DATE WATER & SEWERS DIRECTOR DATE

EJ

TYPE 'B' —⊗—(B) SYMBOL

TO BE USED IN AREAS NOT SUBJECT TO VEHICULAR TRAFFIC

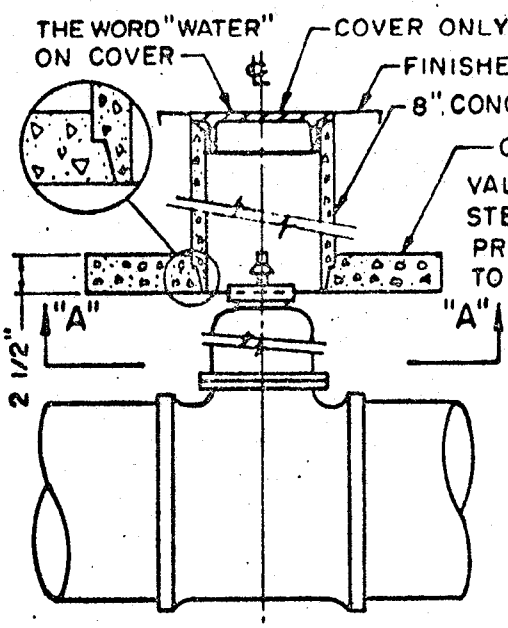

TYPE 'A' —⊗—(A) SYMBOL

TO BE USED IN AREAS SUBJECT TO VEHICULAR TRAFFIC

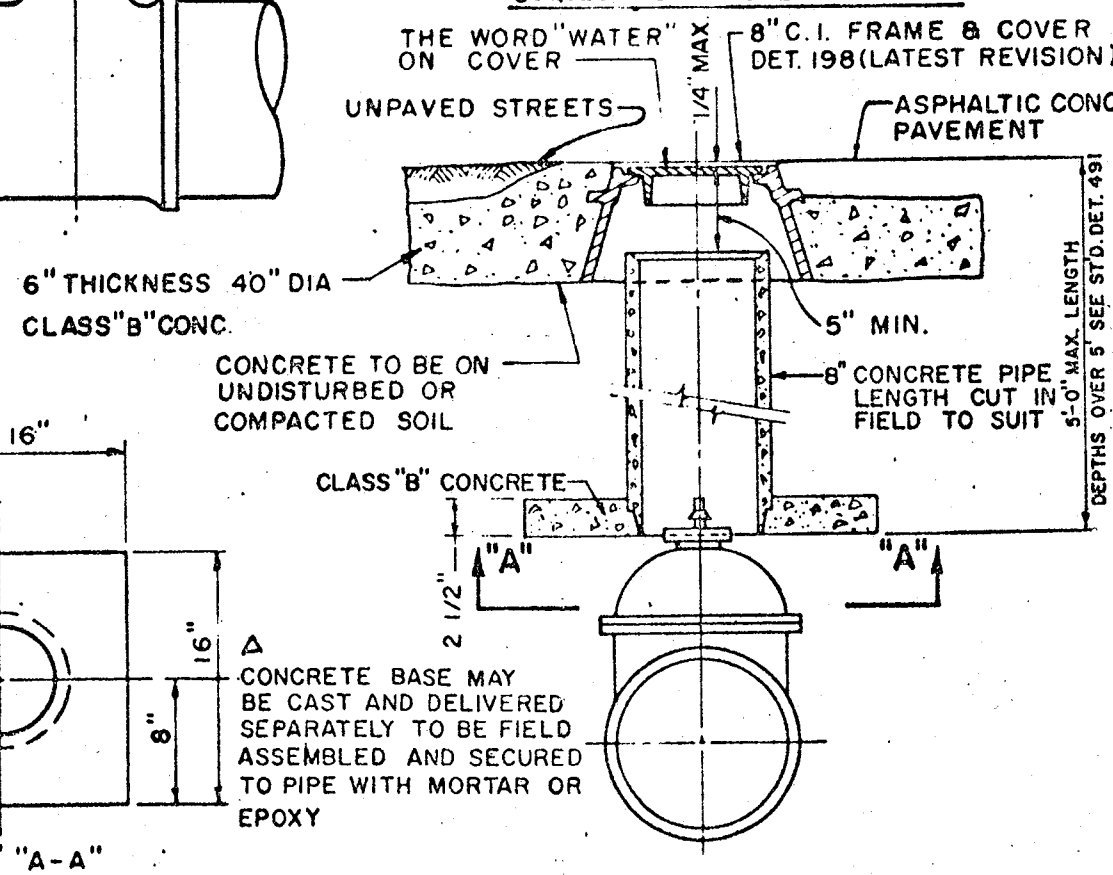

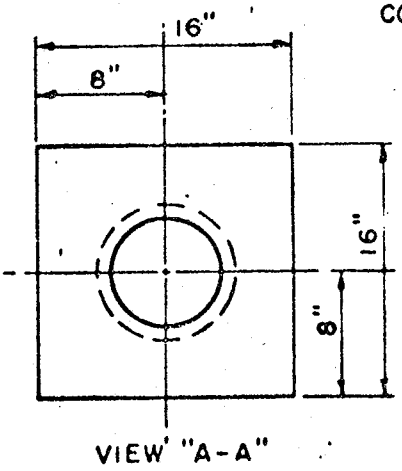

VIEW "A-A"

Δ CONCRETE BASE MAY BE CAST AND DELIVERED SEPARATELY TO BE FIELD ASSEMBLED AND SECURED TO PIPE WITH MORTAR OR EPOXY

REV. 11/72 WF Δ
REV. 10-1-68

SCALE 1" = 1'-0"

SECTION 2D

IRRIGATION SYSTEM

Index

1. Applicable Publications
2. General
3. Materials
4. Installation
5. Tests
6. Tools
7. Cleanup
8. Variation in Arrangement of Sprinklers
9. Guarantee

1. APPLICABLE PUBLICATIONS. The following publications of the issues listed below, but referred to thereafter by basic designation only, form a part of this specification to the extent indicated by the references thereto.

1.1 Federal Specifications.

WW-P-325a	Pipe, Bends and Traps; Lead (for) Plumbing and Water-Distribution
WW-P-421C	Pipe, Cast Gray and Ductile Iron, Pressure (For Water and Other Liquids)
WW-U-531D	Unions, Pipe, Steel or Malleable Iron, Threaded Connection, 150 lbs and 250 lbs
WW-V-51E & Int. Am-2	Valve, Angle, Check, and Globe, Bronze, (125, 150 and 200 Pound, Threaded End, Flanged Ends, Solder Ends, and Brazed End, for Land Use)
WW-V-54D & Int. Am-1	Valve, Gate, Bronze (125, 150 and 200 Pound, Threaded Ends, Flanged Ends, Solder End and Brazed Ends, for Land Use

1.2 American National Standards Institute, Inc. (ANSI) Standards.

A 21.6-1970	Cast-Iron Pipe Centrifugally Cast in Metal Molds, for Water and Other Liquids
A 21.8-1970	Cast-Iron Pipe Centrifugally Cast in Sand-Lined Molds, for Water and Other Liquids
A 21.10-1971 & A 21.10a-1972	Gray-Iron and Ductile-Iron Fittings, 2 In. through 48 In., for Water and Other Liquids
A 21.11-197	Rubber-Gasket Joints for Cast-Iron and Ductile-Iron Pressure Pipe and Fittings

1.3 American Society for Testing and Materials (ASTM) Standards.

D 1785-74	Poly (Vinyl Chloride) (PVC) Plastic Pipe, Schedules 40, 80, and 120
D 1869-66	Rubber Rings for Asbestos-Cement Pipe
D 241-74	Poly (Vinyl Chloride) (PVC) Plastic Pipe (SDR-PR)

D 2464-74	Threaded Poly (Vinyl Chloride) (PVC) Plastic Pipe Fittings, Schedule 80
D 2466-74	Socket-Type Poly (Vinyl Chloride) (PVC) Plastic Pipe Fittings, Schedule 40
D 2564-73a	Solvent Cements for Poly (Vinyl Chloride) (PVC) Plastic Pipe and Fittings

1.4 American Water Works Association (AWWA) Standards.

C 400-72	Asbestos-Cement Water Pressure Pipe or Water and Other Liquid
C 500-71	Gate Valves 3 In. Through 48 In. for Water and Other Liquids
C 600-64	Installation of Cast-Iron Water Mains
C 601-68	Disinfecting Water Mains
C 603-65	Installation of Asbestos-Cement Water Pipe
C 700-64	Cold-Water Meters-Displacement Type
C 800-66	Threads for Underground Service Line Fittings.

2. GENERAL. This section covers irrigation piping including connection to source of water supply, complete. Excavation, trenching, and backfill are specified in Section(s): EARTHWORK and EXCAVATION, TRENCHING, AND BACKFILLING FOR UTILITIES SYSTEMS.

2.1 Aboveground and Riser piping shall be galvanized steel.

2.2 Below Ground Piping. Pipe 4 inches and larger shall be cast-iron, asbestos-cement or plastic. Pipe smaller than 4-inch shall be plastic or galvanized steel. Pipe for sleeving shall be corrugated metal, galvanized steel, or plastic or bituminized fiber pipe. The minimum cover for laterals and branches shall be 12 inches. The minimum cover for pressure lines shall be 2.5 feet except under roadways, parking and paved areas the minimum cover shall be 3 feet.

2.3 Sprinkler heads and control valves shall not be located within 2 feet of building or structure foundations.

2.4 Electrical Work shall conform to the applicable requirements of section: ELECTRICAL-DISTRIBUTION AND PARK-LIGHTING; UNDERGROUND.

3. MATERIALS shall conform to the respective specifications and other requirements specified below:

3.1 Pipe.

3.1.1 Galvanized Steel Pipe shall conform to ASTM A 120, standard weight.

3.1.2 Plastic Pipe shall conform to ASTM D 1785, schedule 40 for pipe with solvent welded joints and schedule 80 for pipe with threaded joints, or to ASTM D 2241, Type 1, grade 1, 315 psi for pressure lines and 200 psi for other lines for pipe with solvent welded joints. Pipe and fittings shall bear the seal of approval (nsf mark) of the National Sanitation Foundation's standard for plastic pipe and fittings for potable water service.

3.1.3 Asbestos Cement Pipe. AWWA C 400, class 150, unless otherwise shown. Uncombined hydroxide content shall not exceed 1.0 percent.

3.1.4 Cast Iron Pipe. Federal Specification WW-P-421, type II or III, class 150, or ANSI A 21.6 or A 21.8, working pressure 150, with push-on or mechanical joints, unless otherwise shown.

3.1.5 Bituminized Fiber Pipe. ASTM D 1861 or D 1862.

3.2 Joints.

3.2.1 Plastic Pipe Joints shall be solvent welded or threaded. Solvent for welded joints shall conform to ASTM D 254. Use of pipe dope or solvents on threaded joints will not be permitted.

3.2.2 Asbestos Cement Pipe. Rubber rings, ASTM D 1869.

3.2.3 Cast Iron Pipe. Mechanical joints, ANSI A 21.11, stuffing box type. Push-on joint, ANSI A 21.11.

3.2.4 Insulating Joints shall be installed between nonthreaded ferrous and nonferrous metallic pipe, fittings and valves. Insulating joints shall consist of a sandwich-type flange insulating gasket of the dielectric type, insulating washers, and insulating sleeves for flange bolts. Insulating gaskets shall be full faced with outside diameter equal to the flange outside diameter. Bolt insulating sleeves shall be full length. Units shall be of a shape to prevent metal-to-metal contact of dissimilar metallic piping elements.

3.2.5 Insulation Joints. A rubber-gasketed or other suitable type of insulating joint shall be provided to effectively prevent metal-to-metal contact between adjacent dissimilar metallic pipes or fittings.

3.2.6 Connections between asbestos cement pipe and cast iron fittings, or valves shall be made with jointing materials conformig to AWWA C 603.

3.3 Fittings and Specials.

3.3.1 For Asbestos Cement Pipe. Fittings and specials shall be cast iron, bell-end in accordance with ANSI A 21.10, 150 psi pressure rating, except that profile of bell may have special dimensions as required by the pipe manufacturer.

3.3.2 For Cast Iron Pipe. Fittings and specials shall be suitable for 150 psi working pressure, unless otherwise indicated. Fittings and specials for mechanical joint pipe shall conform to ANSI A 21.10. Fittings and specials for use with push-on joints shall conform to ANSI A 21.10 and A 21.11.

3.3.3 For Galvanized Steel Pipe. Steel fittings shall be galvanized. Threaded fittings shall conform to ANSI B 16.3.

3.3.4 For Plastic Pipe. Fittings shall conform to ASTM D 2464 or D 2466.

3.4 Gate Valves shall be designed for a working pressure of not less than 150 psi. Valve connections shall be as required for the piping in which they are installed. Valves shall have a clear waterway equal to the full nominal diameter of the valve, and shall be opened by turning counterclockwise. The operating nut or wheel shall have an arrow, cast in the metal, indicating the direction of opening.

3.4.1 Valves smaller than 3 inches shall be all bronze and shall conform to Federal Specification WW-V-54, type I.

3.4.2 Valves 3 inches and larger shall be iron body, bronze mounted, and shall conform to AWWA C500.

3.5 Pressure Relief Valves shall have all bronze body and dome construction with silicone seats, stainless steel springs and be ASME tested and rated. Relief setting shall be 50 psi. Valves shall be 3/4 inch size.

3.6 Valve Boxes shall be plastic, cast iron, or concrete, except that concrete boxes may be installed only in locations not subjected to vehicular traffic. Cast iron boxes shall be extension type with slide-type adjustment and with flared base. The minimum thickness of metal shall be 3/16 inch. Concrete boxes shall be the standard product of manufacturer of precast concrete equipment. The words "Irrigate", for gate valves; "PRV", for pressure relief valves; and "RCV" for remote control valves shall be cast in covers of boxes for the irrigation system. The boxes shall be such length as will be adapted, without full extension, to the depth of cover required over the pipe at valve location. Plastic boxes shall be a standard catalog product of a manufacturer regularly engaged in the manufacture of valve boxes. Plastic boxes installed in paved areas, roadways and oher areas subject to vehicular traffic shall be equipped with cast iron rings and covers. Plastic boxes installed inturfed areas shall have green covers. Boxes housing control valves shall have lockable covers. Plastic shall be rigid combination of polyolefin and fibrous inorganic materials having the following physical properties:

ASTM Test	Method	Value
Tensile Strength (2.0 in. Min.)	D-638	3,400 psi
Impact Strength, Izod	D-256	0.5 ft-lb/in
Shore-D Hardness	D-2240	63
Deflection Temp. @ 66 psi stress	D-648	230 degrees F
Specific Gravity	D-792	1.15

3.7 Sprinklers.

3.7.1 General. Sprinkler heads of the types indicated shall be installed on pipe risers as indicated. Size of riser pipe, maximum spacing heads, radius of coverage, nozzle diameter, rate of water application and the available pressure at the riser, shall be as indicated for each type and size of head. Sprinkler units of each type shall be the product of manufacturers regularly engaged in the production of lawn sprinkler or irrigation equipment.

3.7.2 Fixed Head, Pop-Up Nozzle Sprinklers shall be of the lawn sprinkler type having removable spray tip nozzles of the full, three quarters, half, third or quarter circle patterns, as required. The pop-up feature shall consist of a piston to which the spray tip nozzle is attached, a synthetic rubber gasket and shall be of sufficient height to permit it to rise at least one inch while in operation. Bodies shall be cast brass, and the recess for the piston shall be sufficiently deep to contain the piston completely within the body of the sprinkler head. Pistons or piston parts, spray tip nozzles and other parts shall be machined from rod brass. Pistons shall be cylindrical in cross section and shall fit sufficiently close in a machined hole at top of head, or shall have a machined flange and seat, so as to exclude debris from the recess.

3.7.3 Rotary Pop-Up Sprinklers of the full or part circle pattern as indicated shall be actuated by a water-driven gear motor. Gears shall be inclosed and protected from sand. Inner parts shall be of brass, bronze, or other corrosion resistant material. Outer body shall be of sufficient strength and design to protect sprinkler from vandalism. Sprinklers shall be of one piece housing type so that interior parts may be removed or replaced from top without removing housing from the riser. Sprinklers shall be equipped with free turning covers or other device to eliminate vandalism or damage.

3.7.4 Shrubbery Spray Heads shall be fully adjustable from full flow to shut off. Heads shall be of all brass construction tapped for 1/2-inch I.P.S. female thread. Nozzles shall be interchangeable. Heads shall be equipped with vandal-proof locking screws.

3.7.5 Bubbler Type Irrigation Heads shall be fully adjustable from full flow to shut off. Heads shall be plastic with brass adjusting screw and shall be of the side discharge type.

3.8 Sprinkler Control Valves and Valve Accessories.

3.8.1 Remote Control Valves shall be completely serviceable while installed in line or shall have a union connection on the downstream side; shall have brass bodies, a flow control device; shall operate on approximately 24 volts, be normally closed, be slow closing globe type; and be of the same manufacturer as the automatic controller used in the work.

3.8.2 Quick Coupling Valves shall be two piece, spring-loaded, compression type, normally closed, opening against line pressure, and actuated by downward thrust against the valve. Body shall be of cast red bronze. Machined parts shall be fabricated from red brass. Valve washers and sealers for key stems shall be of a semi-rigid, non-metallic, material and shall be easily replaceable. Inlets shall be tapped for National Standard pipe thread of the pipe riser size or sizes shown on the drawings. Valves shall be suitable for a maximum operating pressure of 150 psi and shall be the standard product of a reputable manufacturer of quick coupling valves for lawn sprinkling systems. The Contractor shall furnish coupler keys for operating the valves with hose swivels. Rubber sleeves shall be the standard product of the manufacturer of quick coupling valves and when required they shall replaced hinged cover as regularly furnished. Each sleeve shall have a cover.

3.9 Unions shall conform to the requirements of Federal Specification WW-U-531, Type B.

3.10 Automatic Controllers. Controllers shall be the product of a manufacturer regularly engaged in the production of turf sprinkler systems and shall be specifically designed for use on large turf areas. Controller shall be suitable for operation on the available electrical supply and shall be capable of complete automatic and manual operation for the number of stations shown in table I. Control circuit voltage shall be less than 30 volts. Each controller shall have a master switch to disconnect controller from supply lines.

TABLE I

Controllers	No. of Stations
A	18
B	6
C	12
D	12
E	12
F	12
G	23
H	18
I	12

3.10.1 Housing. Each controller shall be inclosed in a tamper-proof lockable metal housing. Exterior wall mounted and pedestal mounted controllers shall be weatherproof. Where more than one controller is installed in an irrigation system, a single key shall open all cabinets. Two keys for each system shall be furnished.

3.10.2 Programming. Timing for each station shall be viable up to 60 minutes. The programming cycle shall be not less than 14 calendar days. Each station shall be independently timed, scheduled, or omitted. Programming shall be changeable without special tools and without dissembling controller.

3.10.3 Charts. A chart, encased in plastic, showing clearly the areas serviced by each remote control valve shall be provided at each controller.

3.10.4 Electrical Work shall conform to the requirements of section: ELECTRICAL-DISTRIBUTION AND PARK-LIGHTING; UNDERGROUND Electrical wiring from controller to control valves shall be solid, single conductor, copper wire, type UF, size recommended by the controller manufacturer except that minimum wire size shall be No. 16. Common wire shall be different color from all others. Regardless of the number of location of valves connected to a single controller station, separate control wires shall be run from the controller station to each valve. Wiring from controllers to panel shall be installed in rigid conduit.

3.11 Gravel shall be crushed or natural material, washed and uniformly graded between 3/8 and 1-inch size.

3.12 Pipe Bedding and Backfill Material. Sand bedding material not less than 2 inches thick shall be placed under pipe where trench excavation is in rock. Where sand bedding is not required, the bottom of trenches shall be accurately graded to provide uniform bearing and support for each section of pipe on undisturbed soil at every point along its entire length. Backfill material shall be suitable for the required compaction and free frm stones larger than 1-inch in any dimension.

3.13 Water meters shall be the displacement type conforming to AWWA C700.

4. INSTALLATION.

4.1 General. Unless otherwise specified, installation of sprinklers, backflow prevention units, control valves, meters and boxes shall conform to the drawings.

4.2 Handling. Pipe and accessories shall be handled so as to insure delivery to the trench in sound, undamaged condition. The interior of pipe and accessories shall be thoroughly cleaned of foreign matter before being lowered into the trench and shall be kept clean during laying operations by plugging or other approved method. Before installation, the pipe shall be inspected for defects. Material found to be defective before or after laying shall be replaced with sound material at no additional cost to the Government.

4.3 Cutting of pipe shall be done in a neat and workmanlike manner without damage to the pipe. Unless otherwise recommended by the manufacturer and authorized by the Contracting Officer, cutting shall be done with an approved type mechanical cutter. Wheel cutters shall be used when practicable.

4.3.1 Plastic Pipe shall be cut square and all burrs, particles and curls shall be removed.

4.4 Joint Deflection.

4.4.1 Asbestos Cement Pipe. Maximum allowable deflections from a straight line or grade, as required by vertical curves, horizontal curves, or offsets, will be 5 degrees unless a lesser amount is recommended by the manufacturer.

4.4.2 Cast Iron Pipe. The maximum allowable deflection will be given in AWWA C600. Table II shows maximum deflection for 18 foot lengths of pipe. For other lengths the deflection will vary proportionately.

TABLE II

Deflection In Inches

Diameter in Inches	Push-On Joint Pipe	Mechanical-Joint Pipe
3	19	31
4	19	31
6	19	27
8	19	20
10	19	20

If the alinement required deflection in excess of the above limitations, special bends or a sufficient number of shorter lengths of pipe shall be furnished to provide angular deflections within the limit set forth.

4.5 Placing and Laying. Pipe and accessories shall be carefully lowered into the trench by means of derrick, ropes, belt slings, or other authorized equipment. Under no circumstances shall any of the materials be dropped or dumped into the trench. The full length of each section of pipe shall rest solidly upon the pipe bed, with recesses

excavated to accommodate joints. Pipe that has the grade or joint disturbed after laying shall be taken up and relaid. Pipe shall not be laid in water or when trench conditions are unsuitable for the work. Water shall be kept out of the trench until jointing is completed. When work is not in progress, open ends of pipe, fitting, and valves shall be securely closed so that no trench water, earth, or other substances will enter the pipes of fittings.

4.5.1 Asbestos Cement Pipe shall be installed in accordance with AWWA C603, except as otherwise specified. Short lengths of pipe machined at each end or overall shall be used at fittings and rigid structures and for tying-in and closures.

4.5.2 Plastic Pipe shall be installed in accordance with the procedures recommended in ASTM D 2774 and as herein specified.

4.5.3 Tracer Wire of N. 12, type TW plastic coated copper wire, or Tracer Tape shall be installed with non-metallic (asbestos-cement or plastic) irrigation pressure lines.

a. Tracer wire or tracer tape shall follow the main line pipe lines and terminate in the yard box with the gate valve that controls these main irrigation lines. Provide enough length of wire or tape to make a loop and attach a plastic label with the designation "Tracer Wire."

4.6 Jointing.

4.6.1 Asbestos Cement Pipe. Couplings shall be installed in accordance with AWWA C603.

4.6.2 Cast Iron Pipe. Mechanical and push-on type joints shall be installed in accordance with AWWA C600.

4.6.3 Galvanized Steel Pipe. Threaded joints shall be made tight with a stiff mixture of graphite and oil, inert filler and oil, or with an approved graphite compound, applied with a brush to the male threads only. Compounds shall not contain lead.

4.6.4 Insultion Joints shall be installed in accordance with recomendations of the manufacturer.

4.6.5 Insulating Joints shall be installed in accordance with recommendations of the manufacturer.

4.6.6 Connections between different types of pipe and accessories shall be made with transition fittings approved by the Contracting Officer.

4.7 Pipe Sleeves shall be installed with a minimum of off-set at the joints to permit easy installation and removal of the irrigation lines. All plastic lines shall be installed in sleeves under paved areas. Sleeves shall extend at least 12 inches beyond the edges of the pavement. Sizes of sleeves shall be as follows:

Pipe Size (inches)	Minimum Sleeve Size (inches)
1/2	2
3/4	2-1/2
1, 1-1/4 and 1-1/2	3
2 and 2-1/2	4
3 and 4	6

4.8 Setting of Valves, and Boxes. Valves and valve boxes shall be installed where shown or directed, and shall be set plumb. Valve boxes shall be centered on the valves. Valves shall be located outside the area of roads and streets. Earth fill shall be carefully tamped around each valve or meter box to a distance of 4 feet on all sides of the box, or to the undisturbed trench face if less than 4 feet. Valves shall have the interiors cleaned of all foreign matter before installation. Stuffing boxes shall be tightened and the valve shall be inspected in open and closed positions to insure that all parts are in working condition.

4.9 Reaction Backing.

4.9.1 Thrust blocks shall be concrete mixed not leaner than 1 cement: 2-1/2 sand: 5 gravel. Blocks shall be placed between solid ground and the fitting to be anchored. The area of bearing shall be as indicated or as approved.

4.10 Remote Control Valves.

4.10.1 Install remote control valves in locations as shown on the drawings, with a cover of 8 inches maximum over top of flow control stem. Install a union on downstream side of all valves not provided with a union type connection. Fit with valve box and cover. Top of valve box shall be flush with finish grade.

4.11 Remote Control Wiring. Connections of wiring, other than in the controller housing, shall be made with epoxy encapsulated connectors. Where more than one wire is placed in trench, the wiring shall be taped together at maximum intervals of 10 feet.

4.12 Automatic Sprinkler Controller. Controller shall be mounted on wood with wood screws and on concrete with expansion shield type anchors or embedded anchor bolts. Connect electrical to panel as shown on the drawings. Connection to control wiring shall be made within the pedestal or head of the controller. Electrical wiring shall be in a rigid conduit from controllers to panel provided under other sections. The work under this seciton shall include all wiring to the panels or elsewhere as required, in order to complete the installation of the control system.

5. TESTS.

5.1 After completion of the piping system and prior to backfilling and the installtion of the sprinkler heads, the entire system shall be tested for leaks and thoroughly flushed under pressure to remove any dirt, scale or other material. Lines shall be tested at 200 p.si. for 1 hour duration. Cracked or defective pipe, fittings, or accessories disclosed in the pressure test shall be replaced by the Contractor with sound material at no aditional cost to the Government, and the test shall be repeated until results are satisfactory to the Contracting Officer.

5.1.1 No line shall be covered until inspection and approval has been given by the Contracting Officer.

5.1.2 Testing of plastic pipe shall not be done until all joints have had at least 2 hours to set and cure. During cold weather, 48 hours elasped time shall be allowed for setting prior to testing. No water under pressure shall come in contact with any joint during the specified curing period. In hot weather, water shall not be permitted to stand in pipes until after backfilling is completed. Water used in testing shall be drained from pipes after completion of testing.

5.2 Coverage Test. When the irrigation system is completed the entire system shall be adjusted and operated to demonstrate the water coverage is complete and adequate and that the system conforms to the requirements of the plans and specifications. All deficiencies and inadequacies resulting from defective or inadequate materials and/or workmanship shall be corrected at no additional cost to the Government. In the event any modifications to the system or deviation from the approved plans and specifications are directed, an adjustment in contract price will be made.

6. TOOLS. Three sets of special wrenches for removal and/or installation of sprinkler heads shall be provided at locations designated by the Contracting Officer.

7. CLEANUP. Upon completion of the installation of the irrigation system and appurtenances, all debris and surplus materials resulting from the work shall be removed.

8. VARIATION IN ARRANGEMENT OF SPRINKLERS from those shown on drawings will be permitted. If such variation is made, the Contractor shall submit a shop drawing for approval in accordance with the Special Provisions. If any conflicts occur necessitating departures from the contract drawings, details of departures, hydraulic calculation and reasons shall be submitted as soon as practicable for written approval of the Contracting Office. Hydraulic calculations shall include application rate per hour, maximum triangular spacing of heads for desig flow rate and pressure, overlap including wind loss allowance and friction loss thru pipe fittings, valves and accessories.

9. GUARANTEE. The following equipment to be furnished under this specification shall be guaranteed for a period of 1 year from the date of acceptance thereof, either for beneficial use or final acceptance, whichever is earlier, against defective materials, design, and workmanship:

Quick coupling valves and keys
Rotary sprinklers
Water meters
Control valves
Automatic controller

* * * * *

SECTION 2E

SEWERS; SANITARY, GRAVITY

Index

1. Applicable Publications
2. General
3. Materials
4. Installation
5. Concrete Cradle and Encasement
6. Wye Branches
7. Manholes
8. Connections to Existing Manholes
9. Building Connections

1. APPLICABLE PUBLICATIONS. The following publications of the issue listed below, but referred to thereafter by basic designation only, form a part of this specification to the extent indicated by the references thereto.

1.1 Federal Specifications (Fed. Spec.).

RR-F-621b	Frames, Covers, Gratings, Steps, Sump and Catch Basin, Manhole

1.2 American Society for Testing and Materials (ASTM), Publications.

A 48-74	Gray Iron Castings
C 32-73	Sewer and Manhole Brick (Made from Clay or Shale)
C 62-75a	Building Brick (Solid Masonry Units Made from clay or Shale)
C 94-74a	Ready-Mixed Concrete
C 150-73a	Portland Cement
C 270-73	Mortar for Unit Masonry
C 425-75	Compression Joints for Vitrified Clay Pipe and Fittings
C 478-75	Precast Reinforced Concrete Manhole Sections
C 700-75	Vitrified Clay Pipe, Extra Strength, Standard Strength and Perforated

2. GENERAL. Gravity sanitary sewers shall be constructed in conformance with this section of the specifications. The construction required herein shall include appurtenant structures and building sewers to points of connection with the building drains five feet outside the buildings to which the sewer system is to be connected. Excavation and backfilling shall conform to section: EXCAVATION, TRENCHING, AND BACKFILLING FOR UTILITIES SYSTEMS. Backfilling shall be accomplished after inspection by the Contracting Officer. Work covered by this section will not be accepted until backfilling connected with the work has been completed satisfactorily.

3. MATERIALS shall conform to the respective specifications and other requirements specified below.

3.1 Pipe may be of any of the following materials unless otherwise specified or shown.

3.1.1 Clay Pipe and Fittings. ASTM C 700, bell and spigot type, unless otherwise specified or indicated.

3.1.1.1 Compression Joints. ASTM C 425.

3.2 Brick For Manholes. ASTM C 62, grade SW, or ASTM C 32, grade MS.

3.3 Cement Mortar. ASTM C 270, type M.

3.4 Portland Cement. ASTM C 150, type II for concrete used in manholes and type optional with the Contractor for cement in concrete cradle and encasement.

3.5 Portland Cement Concrete. ASTM C 94, compressive strength of 3,000 pounds per square inch at 28 days. Concrete in place shall be protected from freezing and moisture loss for 7 days.

3.6 Precast Reinforced Concrete Manhole Sections. ASTM C 478, except that portland cement shall be as specified herein.

3.6.1 Joints for Precast Reinforced Concrete Manhole Sections. Joints shall be mortar, or an apprved mastic or rubber gasket, or an approved combination of these types.

4. INSTALLATION.

4. Adjacent Facilities.

4.1.1 Water Lines. Where the location of the sewer is not clearly defined by dimensions on the drawings, the sewer shall not be closer horizontally than ten feet to a water-supply main or service line, except that where the bottom of the water pipe will be at least twelve inches above the top of the sewer pipe, the horizontal spacing may be a minimum of six feet. Where gravity-flow sewer cross above water lines, the sewer pipe for a distance of ten feet on each side of the crossing shall be fully encased in concrete or shall be acceptable pressure pipe with no joint closer horizontally than three feet to the crossing. The thickness of the concrete encasement including that the pipe joints shall be not less than four inches.

4.2 Pipe Laying.

a. Pipe shall be protected during handling against impact shocks and free fall and the pipe interior shall be free of extraneous material.

b. Pipe laying shall proceed upgrade with the spigot ends of bell-and-spigot pipe and tongue ends of tongue-and-groove pipe pointing in the direction of the flow. Each pipe shall be laid accurately to the line and grade shown on the drawings. Pipe shall be laid and centered so that the sewer has a uniform invert. As the work progresses, the interior of the sewer shall be cleared of all superfluous materials.

c. Before making pipe joints all surfaces of the portions of the pipe to be joined shall be clean and dry. Lubricants, primers, and adhesives shall be used as recommended by the pipe manufacturer. The joints shall then be placed, fitted, joined, and adjusted so as to obtain the degree of water tightness required.

4.2.1 Trenches shall be kept free of water and as dry as possible during bedding, laying, and jointing and for as long a period as required. When work is not in progress, open ends of pipe and fittings shall be satisfactorily closed so that no trench water or other material will enter the pipe or fittings.

4.2.2 Backfill. As soon as possible after the joint is made, sufficient backfill material shall be placed along the pipe to prevent pipe movement off line or grade.

4.2.3 Width of Trench. If the maximum width of the trench at the top of the pipe, as specified in SECTION: EXCAVATION, TRENCHING, AND BACKFILLING FOR UTILITIES SYSTEMS, is exceeded for any reason other than by direction, the Contractor shall install at no additional cost to the Government such concrete cradling, pipe encasement, or other bedding as may be required to satisfactorily support the added load of the backfill.

4.2.4 Joints Between Different Pipe Materials shall be made as hereinbefore specified, using approved jointing materials.

4.3 Leakage Tests. Lines shall be tested for leakage by either infiltration tests or exfiltration tests, as appropriate. Prior to testing for leakage the trench shall be backfilled up to at least the lower half of the pipe. If required, sufficient additional backfill shall be placed to prevent pipe movement during testing, leaving the joints uncovered to permit inspection. Visible leaks encountered shall be corrected regardless of leakage test results. When the water table is 2 feet or more above the top of the pipe at the upper end of the pipe line section to be tested, infiltration shall be measured using a suitable weir or other device acceptable to the Contracting Officer. When the Contracting Officer determines that infiltration cannot be properly tested, an exfiltration test shall be made by filling the line to be tested with water so that a head of at least 2 feet is provided above both the water table and the top of the pipe at the upper end of the pipe line to be tested. The filled line shall be allowed to stand until the pipe has reached its maximum absorption, but not less than 4 hours. After absorption, the head shall be re-established. The amount of water required to maintain this water level during a two-hour test period shall be measured. Leakage as measured by either the infiltration test or exfiltration test shall not exceed 250 gallons per inch diameter per mile of pipe line per day When leakage exceeds the maximum amount specified, satisfactory correction shall be made and retesting accomplished. Testing, correction, and retesting shall be made at no additional cost to the Government.

4.4 Test for Deflection. When flexible pipe is used, a deflecting test shall be made on the entire length of the installed pipeline on competion of all work, including the leakage test, backfill, and placement of any fill, grading, paving, concrete, or superimposed loads. Deflection shall be determined by use of a deflection device or by use of a spherical, spheroidal, or elliptical ball, a cylinder, or circular sections fused to a common shaft. The ball, cylinder, or

circular sections shall have a diameter, or minor diameter as applicable, of 95 percent of the normal inside diameter of the pipe. A tolerance of +0.5 percent will be permitted. The ball, cylinder, or circular sections shall be of a homogeneous material throughout, shall have a density greater than 1.0 as related to water at 39.2 degrees F, and shall have a surface brinell hardness of not less than 150. It shall be center bored and through bolted with a one-fourth inch minimum diameter steel shaft having a yield strength of 70,000 psi or more, with eyes at each end of attaching pulling cables. The eye or loop shall be suitably backed with flanged or heavy washer such that a pull exerted on the opposite end of the shaft shall produce compression throughout the remote end of the ball, cylinder or circular sections. Circular sections shall be so spaced that the distance from the external faces of the front and back sections shall equal or exceed the diameter of the circular section. Failure of the ball, cylinder, or circular sections to pass freely through a pipe run, either by being pulled through or by being flushed through with water, shall be cause for rejection of that run. When a deflection device is used for the test in lieu of the ball, cylinder, or circular sections described hereinbefore, such device shall be approved by the Contracting Officer perior to use. The device shall be sensitive to 1.0 percent of the diameter of the pipe bing measures and shall be accurate to 1.0 percent of the indicated dimension. Installed pipe showing deflections of 4.5 percent of the normal diameter of the pipe shall be retested by a run from the opposite direction. If the retest indicates a deflection in excess of the 4.5 percent, the suspect pipe shall be replaced. Any pipe showing deflections in excess of 5 percent at the end of the one year following installation and acceptance will be replaced at no cost to the Government.

5. CONCRETE CRADLE AND ENCASEMENT. The pipe shall be supported on a concrete crale, or encased in concrete where indicated or directed.

6. WYE BRANCHES shall be installed where sewer connections are indicated or where directed. Cutting into piping, for connections shall not be done except in special approved cases. When conditions are such that the connecting pipe cannot be adequately supported on undisturbed earth or tamped backfill, the pipe shall be encased in concrete backfill or supported on a concrete cradle as directed. Concrete required because of conditions resulting from faulty construction methods or negligence by the Contractor shall be installed at no additional cost to the Government. The installation of wye branches in a existing sewer shall be made by a method which does not damage the integrity of the existing sewer. One acceptable method consists of removing one pipe section, breaking off the upper half of the bell of the next lower section and half the running bell of the wye section. After placing the new section, it shall be rotated so that the unbroken half of the bell will be at the bottom. The two joints shall then be made with joint packing and cement mortar.

7. MANHOLES.

7.1 General. Manholes shall be constructed of brick, concrete, precast concrete rings, with cast iron or reinforced-concrete frames and covers, and in accordance with the drawings. The invert channels shall be smooth and semicircular in shape conforming to the inside of the adjacent sewer section. Changes in direction of flow shall be made with a smooth curve of as large a radius as the size of the manhole will permit. Changes in size and grade of the channels shall be made gradually and evenly. The invert channels shall be formed directly in the concrete of the manhole base, or shall be built up with brick and mortar, or shall be half tile laid in concrete, or shall be constructed by laying full section sewer pipe through the manhole and breaking out the top half after surrounding concrete has hardened. Pipe connections shall be made to manholes using water stops, standard o-ring joints, special manhole couplings, or shall be made in accordance with the manufacturer's recommendation. The Contractor's proposed method of connection, showing materials selected and specials required, shall be submitted to the Contracting Officer and approved prior to installation. The floor of the manhole outside the channels shall be smooth and shall slope toward the channels not less than one inch per foot nor more than 2 inches per foot. Free drop inside the manholes shall not exceed one foot 6 inches, measured from the invert of the inlet pipe to the top of the floor of the manhole outside the channels, and drop manholes shall be constructed whenever the free drop would otherwise be greater than one foot 6 inches. Ladders shall not be installed unless the depth exceeds 12 feet.

7.2 Manhole Ladder. When the depth from top of cover to invert of main sewer exceeds 12 feet, manholes shall be provided with a straight-type steel ladder not less than 16 inches in width with 7/8 inch-diameter rungs spaced 12 inches apart. The rails shall be not less than 2 inches by 1/2-inch in section. The ladder shall be adequately anchored to the wall by means of steel inserts spaced not more than 6 feet apart vertically and shall be so installed as to provide at least 6-1/2 inches of toe space between the wall and the inside of the rungs. The ladder and inserts shall be galvanized after fabrication in conformance with ASTM A 123. The wall along the line of the ladder shall be vertical for its entire height.

7.3 Jointing and Plastering. Mortar joints shall be completely filled and shall be smooth and free from surplus mortar on the inside of the manhole. Brick manholes shall be plastered with 1/2 inch of mortar over the entire outside surface of the walls. Brick shall be laid radially with every sixth course laid as a stretcher course. Mortar and mastic joints between precast rings shall be full-bedded in jointing compound and shall be smoothed to a uniform surface on both the interior and exterior of the manhole. Installation of rubber gasket joints between precast rings shall be in accordance with the recommendations of the manufacturer.

7.4 Frames and Covers. Reinforced-concrete frames and covers shall conform to the drawings. Cast iron frames and covers shall conform to the drawings in all essentials of design or to Federal Specification RR-F-621, type as suitable for the application, circular, without vent holes. The frames and covers shall have a combined weight of not

less than 400 pounds and shall conform to ASTM A 48, class 20B. The letter "S", at least 2 inches high, shall be stamped or cast into all covers so as to be plainly visible. Unless otherwise shown on the drawings, the frames and covers shall be so set that the top of the cover will be flush with finished pavement grade or 2 inches higher than finished grade in unpaved areas.

8. CONNECTIONS TO EXISTING MANHOLES. Pipe connections to existing manholes shall be made in such manner that the finish work will conform as nearly as practicable to the essential applicable requirements specified for new manholes, including all necessary concrete work, cutting, and shaping.

9. BUILDING CONNECTIONS shall include the lines to and connection with the building waste drainage piping at a point approximately 5 feet outside the building, unless otherwise indicated. Where building drain piping is not installed, the Contractor shall terminate the building connections approximately 5 feet from the site of the building at a point and in a manner designated by the Contracting Officer.

* * * * *

SECTION 2F

DETOURS AND TRAFFIC CONTROL FACILITIES

1. STREET CLOSINGS. Streets adjacent to the site shall not be closed to through traffic. Closure of Hayden Road shall conform to the applicable completion of work and other requirements of the SPECIAL PROVISIONS.

2. EQUIPMENT CROSSINGS. The Contractor shall not cross detours or existing paved roadways with construction equipment except at approved marked crossings. Crossings shall be maintained in accordance with applicable State, county, and city regulations.

3. TRAFFIC CONTROL FACILITIES. As required by applicable State, city, and county traffic regulations, the Contractor shall furnish, install, maintain, and remove all temporary barricades, lights, warning signs, flagmen, or police officers, and other facilities necessary to control the traffic and protect pedestrians within the limits of the construction area. All signs to be used on the job during periods of darkness shall be reflectorized. Traffic control shall conform to the Traffic Barricade Manual, City of Phoenix and Part 400 of Uniform Standard Specifications for Public Works Construction, Maricopa Association of Governments, Arizona.

4. CAMELBACK ROAD DETOUR. The City of Scottsdale will construct, maintain and remove a detour at Camelback Road in accordance with the attached sketch and the applicable requirements of the SPECIAL PROVISIONS.

* * * * *

PAINT STRIPING CURVE DATA

Curve #1 Data
Δ=23°41'42" Rt.
D=10°30'56"
R=544.87'
T=114.30'
L=225.33'
Ext.=11.86'

Curve #2 Data
Δ=23°41'42" Rt.
D=14°51'44"
R=385.51'
T=80.87'
L=159.43'
Ext.=8.39'

Curve #3 Data
Δ=23°41'42" Rt.
D=15°40'14"
R=365.63'
T=76.70'
L=151.21'
Ext.=7.96'

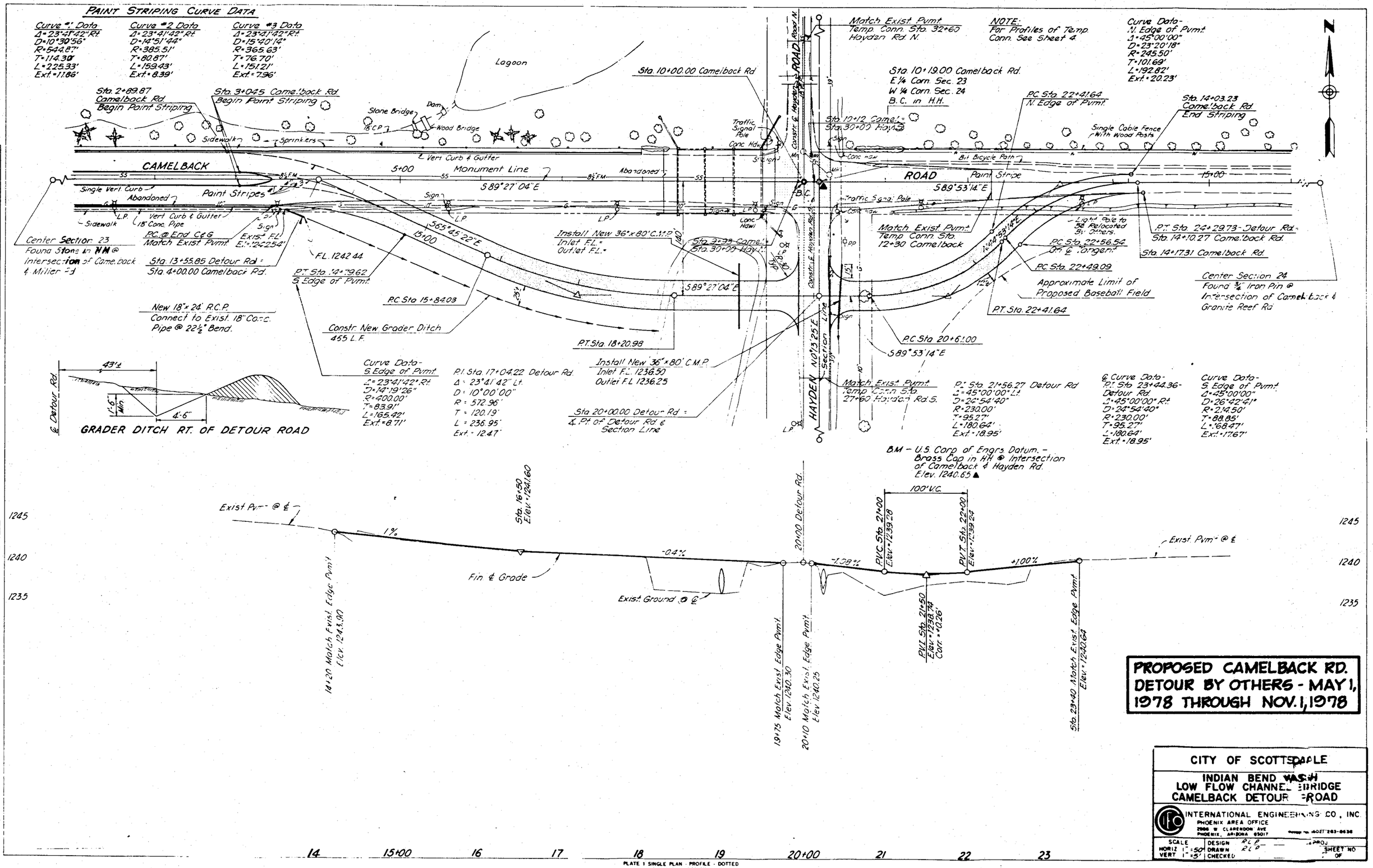

PROPOSED CAMELBACK RD. DETOUR BY OTHERS - MAY 1, 1978 THROUGH NOV. 1, 1978

CITY OF SCOTTSDALE	
INDIAN BEND WASH LOW FLOW CHANNEL BRIDGE CAMELBACK DETOUR ROAD	
INTERNATIONAL ENGINEERING CO., INC. PHOENIX AREA OFFICE 2006 W. CLARENDON AVE. PHOENIX, ARIZONA 85017	
SCALE HORIZ. 1"=50' VERT. 1"=5'	DESIGN R.L.P. DRAWN R.L.P. CHECKED
PROJ.	SHEET NO. OF

PLATE 1 SINGLE PLAN - PROFILE - DOTTED
CHARLES BRUNING COMPANY

SECTION 2H

PUMPS; WATER, VERTICAL TURBINE

Index

1. Applicable Publications
2. General
3. Materials and Equipment
4. Approval of Materials and Equipment
5. Workmanship
6. Lineshaft Vertical Turbine Pumps
7. Submersible Vertical Turbine Pumps
8. Electrical Equipment
9. Concrete Foundations
10. Operating and Maintenance Instructions
11. Tools
12. Tests
13. Guarantee

1. APPLICABLE PUBLICATIONS. The following publications of the issues listed below, but referred to thereafter by basic designation only, form a part of this specification to the extent indicated by the references thereto.

1.1 Federal Specification.

GG-G-76D	Gages, Pressure and Vacuum, Dial Indicating (for Air, Steam, Oil, Water, Ammonia, Chloro-Fluoro Hydrocarbon Gases, and Compressed Gases)

1.2 American National Standards Institute, Inc., (ANSI) Standard.

B58.1-1971	Deep Well Vertical Turbine Pumps – Line Shaft and Submersible Types

2. GENERAL.

2.1 Capacities of all equipment shall be not less than those indicated.

2.2 Conformance With Agency Requirements. Where materials or equipment are specified to be an approved type, the seal or label of approval from a nationally recognized testing agency adequately equipped and competent to perform such services shall be attached thereto. A certification or published catalog specification data statement to the effect that the items are in accordance with the referenced standard will be acceptable as sufficient evidence that the items conform thereto. In lieu of such certification or published data, the Contractor may submit a written certificate from any approved nationally recognized testing agency adequately equipped and competent to perform such services, stating that the items have been tested and that the units conform to the requirements listed hereinafter, including methods of testing of the specified agency. In addition to the testing agency requirements, the items furnished shall comply with the other requirements of these specifications.

2.3 Nameplates. Each major item of equipment shall have a standard nameplate securely affixed thereto in a conspicuous place showing the manufacturer's name, address, and serial number. In addition, the nameplate for each pump shall show the capacity in gallons per minute at rated speed in revolutions per minute and head in feet; the nameplate for each motor shall show the horsepower, speed, and electric-current characteristics. Such other information as the manufacturer may consider necessary to complete identification shall be shown on the nameplate.

2.4 Safety Requirements. All gears, couplings, projecting setscrews, keys, and other rotating parts so located that any person can come in close proximity thereto shall be fully enclosed or properly guarded.

2.5 Spare-Parts Data. As soon as practicable after approval of materials and equipment and, if possible, not later than 4 months prior to the date of beneficial occupancy, the Contractor shall furnish a complete list of parts and supplies, with current unit prices and source of supply.

2.6 Electrical Work. Electrical motor driven equipment specified herein shall be provided complete with motors, motor starters, and controls. Electric equipment and wiring shall be in accordance with section: ELECTRICAL WORK, INTERIOR. Electrical characteristics shall be as indicated. Motor starters shall be provided complete with properly sized thermal overload protection in each phase and other appurtenances necessary for the motor control specified. Each motor shall be of sufficient capacity to drive the equipment at the specified capacity without exceeding the nameplate rating of the motor when operating at proper electrical system voltage. Manual or automatic control and protective or signal devices required for the operation herein specified and any control wiring required for controls and devices but not shown on electrical plans shall be provided under this section of the specifications.

2.7 Work Specified Elsewhere. Concrete for foundations not specified hereinafter shall be as specified in section: CONCRETE.

3. MATERIALS AND EQUIPMENT shall conform to the respective publications and other requirements specified below. Other materials and equipment shall be as specified elsewhere herein and as shown on the drawings, and shall be the products of manufacturers regularly engaged in the manufacture of such products. Items of equipment shall essentially duplicate equipment that has been in satisfactory use at least 2 years prior to bid opening and shall be supported by a service organization that is, in the opinion of the Contracting Officer, reasonably convenient to the site.

3.1 Pressure Gage. Federal Specification GG-G-76, class 1, style X, type I, minimum size 3-1/2 inches nominal diameter, pressure range as specified or as shown.

4. APPROVAL OF MATERIALS AND EQUIPMENT. Within 30 days of receipt of notice to proceed, and before starting installation of any materials or equipment, the Contractor shall submit to the Contracting Officer for approval, installation drawings and lists of materials and equipment to be incorporated in the work. Installation drawings shall include detailed plans for installation of the pumps and drivers; diagrams indicating all electrical wiring and electrical connections. If departures from the contract drawings are deemed necessary by the Contractor, details of such departures, including changes in related portions of the project and reasons therefor, shall be submitted with the drawings. Approved departures shall be made at no additional cost to the Government. The lists of materials and equipment shall be supported by sufficient descriptive material, such as catalogs, cuts, diagrams, pump characteristic curves, and other data published by the manufacturer, to demonstrate conformance with the specification requirements; catalog numbers alone will not be acceptable. The data shall include the name and address of the nearest service and maintenance organization that regularly stocks repair parts. Listings of items that function as part of an integrated system shall be furnished at one time.

5. WORKMANSHIP. Materials and equipment shall be installed in accordance with the approved recommendations of the manufacturer for obtaining conformance with the contract documents.

6. LINESHAFT VERTICAL TURBINE PUMPS.

6.1 General. Lineshaft vertical turbine pumps shall be constructed in accordance with American Standard B58.1 except as hereinafter modified. The pumps shall be designed for flanged discharge as shown, and the pump setting or location of the pump suction shall be as shown. The lower end of the suction pipe shall be equipped with a brass or stainless steel strainer of adequate areaway opening. The pumps shall be designed for operation under the following conditions.

6.1.1 Pump Service. The pump shall be utilized in the irrigation pump station.

6.1.2 Pump Drivers. The pump shall have a vertical hollow shaft electric motor driving unit.

6.1.3 Pump Characteristics. The pump shall be capable of discharging 750 gal. per min. at 240 feet total discharge head measured at the discharge flange. Pumps shall operate at optimum efficiencies to produce the most economical pumping system under the conditions encountered.

6.2 Pump Head Assembly shall consist of the pump base, the discharge head, and the driver. Head assemblies shall be of low, rigid construction arranged for bolting to the support plate, and shall be provided with at least 2 eyebolts or cast lugs of suitable size, or other means of securing slings, to facilitate setting and lifting.

6.2.1 Pump Base shall be cast iron or steel with lip to collect leakage from stuffing box. Lip shall be provided with drilled and tapped connection for drainage pipe. Base shall be designed to prevent contamination of the well from the surface, and shall accommodate the required driver assembly.

6.2.2 Discharge Head flanges shall be designed for standard pipe connections. Surface-type discharge heads shall be cast integrally with the pump base.

6.2.3 Pump Drivers.

6.2.3.1 Hollow Shaft Electric Motor Drivers shall be provided with a ball bearing or roller bearing of adequate strength to carry the hydraulic thrust load of the pump impellers and the weight of all rotating parts. The motor shall be provided with a nonreversible ratchet device or automatic releasing clutch to prevent reverse rotation of the pump and impeller shaft. Provisions shall be made for vertical impeller adjustment at the top of the motor.

6.3 Water-Lubricated Pump and Column. Each section of the discharge column shall consist of a column pipe, lineshaft with hardened journal surfaces and bearing spiders with bearings spaced not more than 10 feet on centers, and couplings. Except as hereinafter modified, all elements of the discharge column, pump bowls, and impellers shall conform to American Standard B58.1. The pump bowl shaft shall be stainless steel. A bronze bearing permanently packed with non-soluble hydraulic grease shall be provided at the bowl-assembly intake to servie as the bottom bearing of the impeller shaft. Pump bowls shall have integrally cast vanes with smooth, streamlined water passageways, shall be constructed of close-grained cast iron, and may be lined with enamel, vitreous, or plastic

material. Impellers shall be carefully finished with smooth water passageways and shall have nonoverloading characteristics based on the nameplate motor or engine horsepower rating throughout the entire performance range of the pump. Impellers shall be constructed of bronze which may be coated with enamel, vitreous, or plastic material, or of cast iron which shall be coated with enamel, vitreous, or plastic material.

6.4 Suction Strainer. The suction strainer shall be of the basket type, fabricated from brass or stainless steel.

6.5 Lubrication of lineshaft pumps shall be by water. Pumps designed to operate with dry bearings will not be acceptable.

6.5.1 Water-Lubricated Lineshaft Pumps.

6.5.1.1 Pumps With Automatically Controlled Drivers shall be provided with solenoid-operated valve for prelubrication operation. A time-delay mechanism shall be provided to prevent the pump from starting until all lineshaft bearings above the water level have been supplied with prelubrication water.

6.6 Finish. The pump shall have painted or enameled finish as standard with the manufacturer.

7. SUBMERSIBLE VERTICAL TURBINE PUMPS shall be constructed in accordance with American Standard B58.1, except as hereinafter modified. The size of submersible pumps shall be limited to those using one horsepower or larger motors. The pumps shall be designed for connection to piping as shown. A bronze or stainless steel strainer of adequate areaway opening shall be provided at the pump suction. The pump shall have settings as follows or as shown, and shall be capable of discharging quantities against total pumping heads measured at the top pump bowl while operating in wells with data as shown in the following tabulation. See American Standard B58.1, Part A. Pumps shall be sized to make optimum match with system head curve as shown on the drawings. Pumps shall be operable at heads ranging from 10 percent above or below the normal design head. Pumps shall operate at optimum efficiencies to produce the most economical pumping system under the conditions encountered.

7.1 Head Assembly shall consist of the surface plate from which the vertical discharge pipe is suspended, and an elbow or fitting as required for connecting to the piping system. Head assemblies shall be of cast iron or steel, with threaded, flanged, or welding fitting discharge as required for standard pipe connection. The elbow or pipe fitting may be a standard item or specially fabricated to adequately support the weight of the motor and cable, pump, and discharge pipe when filled with water. The surface plate shall contain suitable openings as required for the discharge pipe, electric power cable, well depth gage, vent pipe, and other accessories as shown. The surface plate shall be of adequate thickness to support the weight of the motor and cable, pump, and discharge pipe when filled with water. The head assembly shall be provided with eyebolts, lugs, or other means as required for securing slings, to facilitate proper setting.

7.2 Pump Bowl Assembly. Except as hereinafter modified, all elements of the pump bowl assembly shall conform to American National Standard B58.1.

7.2.1 Pump Shaft shall be stainless steel and the pump-motor coupling shall be stainless steel capable of transmitting the required thrust in either direction and the total torque of the unit.

7.2.2 Pump Bowls shall have integrally cast vanes with smooth, streamlined water passageways, shall be constructed of close-grained cast iron, and shall be lined with enamel, vitreous, or plastic material. Pump bowls may be equipped with replaceable seal rings on the suction side of enclosed impellers.

7.2.3 Impellers may be open, semiopen, or enclosed design, and shall be carefully finished with smooth water passageways. Impellers shall have nonoverloading characteristics based on the nameplate motor horsepower rating throughout the entire performance range of the pump. Impellers shall be constructed of bronze which shall be coated with enamel, vitreous, or plastic material, of thermoplastic material, or of cast iron which shall be coated with enamel, vitreous, or plastic material.

7.2.4 Bearings. Intermediate bowl bearings shall be water-lubricated bronze or fluted rubber. Top bowl bearings and interconnecting bearings shall be grease packed or water-lubricated bronze or fluted rubber. Grease in grease-packed bearings shall be non-water-soluble hydraulic type permanently sealed against loss. Grease-packed bearings shall be provided with sand caps to prevent intrusion of abrasive particles. Adequate thrust bearings shall be provided to carry the weight of all rotating parts plus the hydraulic thrust, and shall be capable of withstanding upthrust imposed during pump starting. Thrust bearings may be located in the pump motor, or in the pump bowl assembly, and shall be of the self-alining type.

7.2.5 Strainer. A bronze or stainless steel strainer shall be furnished at the pump suction, and shall have a net inlet area equal to at least 3 times the impeller inlet area. The maximum unit opening shall not be more than 75 percent of the minimum opening of the water passage through the bowl or impeller.

7.3 Discharge Pipe shall be sized as shown, capable of withstanding the hydraulic head encountered, with strength of pipe and joints capable of supporting the total weight of the motor and electric cable, pump, and discharge pipe when filled with water. Discharge column retainers or spiders shall be utilized to maintain the discharge pipe

centered in the well casing. A minimum of one retainer shall be provided for each section of discharge pipe. hall be made for fastening the retainer spiders to the discharge pipe to prevent them from sliding on the pipe and damaging the power cable when the pump is installed in the well.

8. ELECTRICAL EQUIPMENT.

8.1 Lineshaft Vertical Turbine Pumps.

8.1.1 Electric Motor. Each electric-motor-driven pump shall be driven by a vertical continuous-duty electric motor. Motors shall be of the squirrel-cage type, having normal-starting-torque and low-starting-current characteristics, and shall be of sufficient size so that the nameplate horsepower rating will not be exceeded throughout the entire published pump characteristic curve.

8.1.2 Control Equipment. Each motor shall be furnished with an enclosed magnetically operated motor starter. Automatically controlled pumps shall have three-position manual-off-automatic selector switch in cover. A pump low-water cutoff shall be installed in the well and shall shut the pump off when the water level in the well reaches the level shown. Low-water cutoff shall be probe type and all parts in contact with water shall be constructed of corrosion resistant materials. The probe wires shall be securely fastened to the pump column at minimum spacing of 10 feet with stainless steel bands or waterproof tape.

9. CONCRETE FOUNDATIONS. Concrete for foundations shall be as specified in section: CONCRETE. Foundation bolts, as required, shall be furnished for proper positioning of equipment during the placement of the concrete.

10. OPERATING AND MAINTENANCE INSTRUCTIONS.

10.1 Bound Instructions. Six complete sets of instructions containing the manufacturer's operating and maintenance instructions for each piece of equipment shall be furnished. Each set shall be permanently bound and shall have a hard cover. One complete set shall be furnished at the time the test procedure is submitted, and the remaining sets shall be furnished before the contract is completed. The following identification shall be inscribed on the covers: the words "OPERATING AND MAINTENANCE INSTRUCTIONS," the name and location of the building, the name of the Contractor, and the contract number. Flysheets shall be placed before instructions covering each subject. The instruction sheets shall be approximately 8-1/2 by 11 inches, with large sheets of drawings folded in. The instructions shall include, but not be limited to, the following:

System layout showing piping, valves, and controls

Approved wiring and control diagrams

A control sequence describing startup, operation, and shutdown

Operating and maintenance instructions for each piece of equipment, including lubrication instructions

Manufacturer's bulletins, cuts, and descriptive data

Parts lists and recommended spare parts

10.2 Framed Instructions. Approved wiring and control diagrams showing the complete layout of the entire system, including equipment, piping valves, and control sequence, framed under glass or in approved laminated plastic, shall be posted where directed. In addition, condensed operating instructions explaining preventive maintenance procedures, methods of checking the system for normal safe operation, and procedures for safely starting and stopping the system shall be prepared in typed form, framed as specified above for the wiring and control diagrams, and posted beside the diagrams. Proposed diagrams, instructions, and other sheets shall be submitted for approval prior to posting. The framed instructions shall be posted before acceptance testing of the systems.

10.3 Field Instructions. Upon completion of the work and at a time designated, the services of one or more competent engineers shall be provided by the Contractor for a period of not less than one day to instruct a representative of the Government in the operation and maintenance of the pumping system. These field instructions shall cover all the items contained in the bound instructions.

11. TOOLS. For each pumping station included in the contract, special tools necessary for maintenance and repair of the pumps, and one pressure grease gun for each type of grease required for pumps, motors, shall be furnished and mounted on a suitable rack.

12. TESTS.

12.1 Pumps. Three certified copies of factory test reports for each pump shall be submitted. The tests shall be performed in accordance with applicable portions of American Standard B58.1. Test reports shall be in the form of characteristic curves, and shall indicate capacities, heads, efficiencies, and horsepower, and net positive suction head, throughout the entire range of the pump. In addition, the Contractor shall operate the pump following installation for a minimum of 2 hours at a head and capacity as specified by the Contracting Officer. The test results shall assure that the pumps have been installed in conformance with applicable parts of American Standard B58.1, and that all manual and automatic controls function properly. Three certified copies of factory pump test curves for each pump shall be submitted.

13. GUARANTEE. The following equipment to be furnished under this section of the specifications shall be guaranteed for a period of one year from the date of acceptance thereof, either for beneficial use or final acceptance, whichever is earlier, against defective materials, design, and workmanship.

* * * * *

SECTION 21

IRRIGATION PUMP STATION

Index

1. Applicable Publications
2. General
3. Approval of Materials, Equipment, and Shop Drawings
4. Spare Parts Data
5. Excavation, Trenching and Backfilling
6. Vertical Turbine Pump
7. Valves and Pump Station Accessories
8. Hydro-Pneumatic Tank
9. Intake Structure
10. Supports, Guides and Anchors
11. Painting
12. Bolts and Gaskets
13. Guarantee

1. APPLICABLE PUBLICATIONS. The following publications of the issues listed below, but referred to thereafter by basic designation only, form a part of this specification to the extent indicated by the references thereto.

1.1 American National Standards Institutes, Inc. (ANSI) Standards.

B1.1-1960 & B1.1a-1968	Unified Screw Threads
B18.2.1-1972	Square and Hex Bolts and Screws, Including Hex Cap Screws and Log Screws

1.2 American Society for Testing and Materials (ASTM) Standards.

A 307-68	Carbon Steel Externally and Internally Threaded Standard Fasteners

1.3 American Water Works Association (AWWA) Standards.

AWWA D100-73 - Welded Steel Elevated Tanks, Standpipe, and Reservoirs for Water Storage

AWWA C 701-70 - Cold-Water Meters - Turbine Type

2. GENERAL. The irrigation pump station including the pumps, tanks, valves, gauges, meters and all the necessary piping and mechanical or electrical control equipment in accordance with these specifications and as shown shall be furnished and installed.

3. APPROVAL OF MATERIALS, EQUIPMENT, AND SHOP DRAWINGS. The Contractor shall furnish in accordance with the SPECIAL PROVISION, shop drawings and a complete list of materials and equipment to be incorporated in the work. Shop drawings shall include detailed plans for the installatio of the pumps; diagrams indicated all electrical wiring and electrical connections; and a detailed piping drawing if changes in the piping arrangement shown on the contract drawings are necessary. The list shall include catalogs, cuts, diagrams, illustrative drawings, pump characteristic curves, and such other descriptive data as may be required by the Contracting Officer. Partial lists submitted from time to time will not be considered, but shop drawings may be submitted separately within the specified time period. Approval of equipment under this provision shall not be construed as authorizing any deviations from the specification unless the attention of the Contracting Officer has been directed to the specific deviations. Equipment differing from that specified may be proposed, provided the Contractor clearly states such differences and provided all essential requirements of the specification are met. If the equipment offered under this provision is, in the opinion of the Contracting Officer, equal to or better than that specified, it will be considered. Pump characteristic curves shall be submitted for each size pump, as prepared by the pump manufacturer, and shall show capacities, heads, efficiencies, and brake horsepower throughout the entire range of the pump.

4. SPARE PARTS DATA. The Contractor shall furnish in accordance with the SPECIAL PROVISION, spare-parts data for each different item of equipment listed. The data shall include a complete list of parts and supplies, with current unit prices and source of supply; a list of parts and supplies that are either normally furnished at no extra cost with the purchase of the equipment or specified hereinafter to be furnished as part of the contract; and a list of additional items recommended by the manufacturer to assure efficient operation for a period of 120 days at the particular installation. The foregoing shall not relieve the Contractor of any responsibility under the guaranty specified hereinafter.

5. EXCAVATION, TRENCHING AND BACKFILLING shall conform to the applicable requirements specified in section: EXCAVATION, TRENCHING AND BACKFILLING FOR UTILITIES.

6. VERTICAL TURBINE PUMP shall conform to the applicable requirements specified in section: PUMPS: WATER, VERTICAL TURBINE.

7. VALVES AND PUMP STATION ACCESSORIES.

7.1 Air Release Valve. The air valve shall be constructed of a cast iron body and cover equipped with bronze trim, stainless steel float, shockproof synthetic seat and bronze linkage. All internal parts shall be stainless steel or bronze.

7.2 Pressure Relief Valve. The pressure relief valve shall be a hydraulically or pneumatically operated, diaphragm actuated globe valve. The valve shall be screwed end, direct-acting, adjustable, spring loaded, and designed to permit flow when pressure exceeds the spring setting. It shall have a single removable seat and a resilient disc and shall be without external packing glands. The valve shall have a bronze body with stainless steel trim. The valve shall be adjustable through a range of 20 to 200 psi.

7.3 Pressure Gauge. Manifold mounted pressure gauge shall be complete with individual 1/4 inch all bronze ball valve shutoff. The gauge shall be constructed for outdoor use with a non-corrosive, dust-proof, water-resistant case, brass mechanism, clear glass crystal, and calibrated 0 to 200 psi.

7.4 Low Level Electrode. The electrode control shall be a series 1 or single electrode control providing a low water level pump stop. The control baseplate shall be high strength, diacast, aluminum alloy with mounting keyholes. The coils shall be wound on nylon bobbins and epoxy encapsulated. The control shall be equipped with a manual reset switch and enclosed in a weatherproof enclosure. The electrode fitting shall be sized to accommodate one electrode and constructed of cast iron. The electrode shall be of stainless steel and wire suspended.

7.5 Six inch (6") 125 number flanged semi-steel wye pattern strainer shall be installed in the piping manifold. The wye strainer shall have a 20 gauge stainless steel 1/8 inch perforated screen. The strainer shall have a hand operated two inch (2") blow down complete with butterfly blow down valve.

7.6 Pressure Sensing Switch. The pressure switch shall be of the 150 psi range with 4-1/2 inch dial. The indicating pointer contact shall be nickel silver with fine silver contact area. The high and low heavy silver stationary contacts shall be mounted on the plexi-glass window assemblies on the front of the gauge. All current carrying parts of the contact assembly shall be gold plated. The gauge shall be of the geared movement type with special link in spring to compensate for arrested movement of pointer contact in operation. Movements shall be of bronze and stainless steel combination. The pointer contact is to have a recalibrating hub. The Bourdon tube shall be of bronze. The dial shall be of 4-1/2 inch laminated synthane with white figures silt screened on black background. The accuracy shall be ASA standard for Grade A gauges or better. The gauge shall be equipped with a shutoff valve.

7.7 Water Meters.

7.7.1 The meter shall conform to AWWA C 701-70.

7.7.2 The manufacturer shall supply an Affidavit of Compliance and a Certificate of Testing for Accuracy for the meter supplied.

7.7.3 The casing shall have the manufacturer's serial number imprinted on the outer case.

7.7.4 The register shall be straight-reading in U.S. gallons with a sweep test hand and replacable change gears.

7.7.5 The register box ring and lid shall be made of a copper alloy containing not less than 75 percent copper.

7.7.6 The register shall be unconditionally guaranteed for ten (10) years not to fail for any reason other than tampering or vandalism. If the register, when taken out of service and equipped with a new measuring chamber assembly, does not meet the measurement requirements of these specifications, it shall be deemed defective and shall be replaced by the manufacturer at no cost to the City of Scottsdale within the guarantee period.

7.8 Air Compressor. The air compressor shall be base mounted for use with a remote receiver, electric motor driven, single stage, air cooled, suitable for continuous outdoor service. Piston displacement shall be capable of at least 1.7 CFM at 100 psi discharge pressure. The air compressor shall be equipped with a belt guard, dry type combination air filter and silencer; pressure gauge; automatic starting unloader for loadless starting; start-stop control, check valve on compressor discharge connection.

8. HYDRO-PNEUMATIC TANK

8.1 Pressure tank shall be steel, electrically welded, horizontal, cylindrical with flanged and dished head of quality steel of 55,000 psi minimum tensile strength. Tanks shall conform to ASME code for unfired pressure vessels. Design working pressure of tank shall be 150 psi. Design materials fabrication, erection and testing of the pressure tank shall be in accordance with applicable requirements of AWWA Specification D100-73. The tank shall be guaranteed as conforming to the latest ASME code provisions. No code stamp is required.

9. INTAKE STRUCTURE.

9.1 The Intake Structure shall be constructed at the location indicated and in accordance with the details shown. Concrete shall have a minimum compressive strength of 3,000 psi at 28 days and shall conform to the requirements of the section entitled "Concrete".

9.2 Pipe passing through walls of the structure shall be provided with cast iron wall sleeves. Annular space between walls and sleeves shall be filled with rich cement mortar. Annular space between pipe and sleeves shall be filled with mastic.

9.3 Metalwork shall be in accordance with the section entitled "Miscellaneous Metal".

9.4 The expanded metal screen shall be steel.

10. SUPPORTS, GUIDES AND ANCHORS. The number, location, design and detail of all supports, guides and anchors shall be subject to the approval of the Contracting Officer. Piping shall be adequately supported, guided and anchored in such manner as to preclude any unnecessary or excessive stresses or strains to be carried by the piping or transmitted to equipment. Supports, guides and anchors shown on the plans shall be installed as indicated. Additional supports, guides, or anchors which field conditions indicate as necessary shall be installed as required by the Contractor. All above grade supports, guides, and anchors shall be neat and workmanlike in appearance, as well as structurally sound. Preference shall be given standard prefabricated or manufactured shapes and items of installation. Bends, tees and valves on buried pressure pipe shall be supported with adequate concrete thrust blocks and concrete anchors with steel straps.

11. PAINTING. All valves, tank, pipe and fittings shall be painted in accordance with the section entitled "Painting, General" of these specifications.

12. BOLTS AND GASKETS.

12.1 Bolts, Nuts, Studs, Rods and Anchors shall conform to the requirements of ASTM A207, Grade B with square or hexagonal heads and hexigonal nuts conforming to ANSI B18.2. Threads shall conform to B1.1, Class 2A fit for bolts and 2B fit for nuts.

12.2 Exposed Bolts, Nuts, Etc., shall be either galvanized or cadmium plated. Buried or submerged bolts shall be 18-8 stainless steel.

12.3 Bolt Ends shall project approximately 2 thread beyond the nut aftees or cast against steel flanges shall be 1/8 inch thick, full face rubber or neoprene. Gaskets for steel flanges shall be 1/16 inch thick asbestos composition material.

13. GUARANTEE. The following equipment to be furnished under these specifications shall be guaranteed for a period of one year from the date of acceptance thereof, either for beneficial use or final acceptance, whichever is earlier, against defective material, design, and workmanship:

Pumps	Air Compressor
Motors	Hydro-Pneumatic Tank
Control Equipment	Wye Strainer
Turbine Meter	Pressure Relief Valve

Upon receipt of notice from the Government of failure of any part of the guaranteed equipment during the guarantee period, the affected part or parts will be replaced promptly with new parts by and at the expense of the Contractor.

* * * * *

SECTION 3A

EARTHWORK

Index

1. Applicable Publications
2. Existing Service Lines and Utility Structures
3. Site Preparation
4. General Excavation
5. Excavation for Buildings and Structures
6. Borrow Material for Lake Lining
7. Determination of Density
8. General Backfilling
9. Preparing Ground Surface for Fill
10. Fills or Embankments
11. Slabs at Grade
12. Subgrade Preparation for Paved Areas
13. Finished Excavation, Fills, and Embankments
14. Shoulder Construction
15. Protection

1. APPLICABLE PUBLICATIONS. The following publications of the issues listed below, but referred to thereafter by basic designation only, form a part of this specification to the extent indicated by the references thereto.

1.1 American Society for Testing and Materials Publications (ASTM).

D 1556-64(1974)	Density of Soil in Place by the Sand-Cone Method
D 1557-70	Moisture-Density Relations of Soils Using 10-lb. (4.5 Kg) Rammer and 18-in. (457-mm) Drop

1.2 American Association of State Highway and Transportation Officials (AASHTO) Standards.

T 180-74	Moisture-Density Relations of Soils Using a 10-lb. Rammer and an 18-Inch Drop
T 191-61	Density of Soil In Place By the Sand Cone Method

2. EXISTING SERVICE LINES AND UTILITY STRUCTURES. The existing service lines and utility structures shown on the drawings, the location of which is known to the Contractor prior to excavation or construction of fills or embankments, shall be protected and safeguarded from damage during grading operations and if damaged, shall be repaired by the Contractor at his expense. In the event that the Contractor damages any existing utility lines that are not shown on the drawing or the locations of which are now known to the Contractor, report thereof shall be made immediately to the Contracting Officer. If the Contracting Officer determines that repairs shall be made by the Contractor, such repairs will be ordered under the "Change" clause of the contract. When utility lines that are to be removed are encountered within the area of operations, the Contractor shall notify the Contracting Officer in ample time for the necessary measures to be taken to prevent interruption of the service.

3. SITE PREPARATION.

3.1 General. The site indicated on the drawings shall be cleared of trees, stumps, roots, brush, and other vegetation, existing foundations, boulders, cobbles, debris, utility lines, and any other items which will interfere with the construction operations or are designated for removal. All vegetation, stumps, roots, and brush within the area to be cleared shall be cutoff flush with or slightly below the original ground surface.

3.2 Grubbing. All stumps and subsurface roots larger than 1-1/2 inches in diameter and matted roots existing within the area bounded by lines 5 feet outside of building or structure foundations shall be removed. In other areas all stumps and subsurface roots larger than 1-1/2 inches in diameter and all matted roots shall be removed to a depth of 18 inches below any subgrade, shoulder, slope, or existing grade. Unless excavation is required, depressions made by grubbing shall be filled with suitable material and compacted to make the surface conform with the original ground surface.

3.3 Disposal of Cleared and Grubbed Material.

3.3.1 Disposal of Salvage Materials or Equipment. Materials or equipment designated to be removed and salvaged or stored shall be reinstalled or stored and protected on the base where indicated or directed by the Contracting Officer. Materials to be removed that are not designated to be salvaged, reinstalled, or stored shall become the property of the Contractor and shall be removed from the site of the work.

3.3.2 Disposal of Other Materials. Materials removed and not designated to be salvaged or stored and materials from grubbing operations shall be designated as scrap and shall become the property of the Contractor and removed from the site of the work.

3.4 Stripping. Soil material containing sod, grass or other vegetation shall be removed, to a depth of 6 inches, from all areas to receive fill or pavement and from the areas within lines 5 feet outside all foundation walls. The stripped material shall be wasted in such locations as are directed by the Contracting Officer or, if approved, the material may be used in the top 6 inches of areas to be planted.

3.5 Conservation of Topsoil. Existing suitable topsoil shall be carefully removed and stockpiled for use in areas to be planted.

3.6 Removal of Existing Pavement. At the edges of areas where pavement is to be removed, the existing pavement shall be cut in straight lines using a concrete saw or other approved methods. The base course shall be removed at least 12 inches beyond the indicated limits of pavement removal and the surfacing shall be cut 6 inches beyond the edge of the base course. Cuts shall be vertical and at least 1/4 the depth of the surfacing. Materials shall be disposed of as directed.

4. GENERAL EXCAVATION. Excavation shall comprise and include the satisfactory removal and disposition of all materials excavated regardless of the nature of the materials encountered. All suitable excavated materials shall be transported to and placed in the fill areas within the limits of the work except as otherwise directed by the Contracting Officer. Excavated material conforming to the requirements specified hereinafter for materials to be used for embankments, fills, backfills and/or grading shall be considered as suitable material for the appropriate use. Where material encountered within the limits of the work is considered unsuitable by the Contracting Officer, such material shall be excavated below the grade shown on the drawings as directed, and replaced with suitable material and an adjustment in contract price will be made. All excavated materials which are considered unsuitable by the Contracting Officer and any surplus excavated material which is not required for fill shall be known as waste and shall be disposed of by the Contractor in the waste areas shown. During construction, excavation and filling shall be performed in a manner and sequence that will provide drainage at all times.

4.1 Blasting will not be permitted.

5. EXCAVATION FOR BUILDINGS AND STRUCTURES shall conform to the applicable requirements specified in section: EXCAVATION, FILLING, AND BACKFILLING FOR BUILDINGS.

6. BORROW MATERIAL FOR LAKE LINING.

6.1 Selection of Borrow Material. Borrow material shall be selected to meet the requirements and conditions of the lake lining for which it is to be used. Borrow material shall be obtained from source indicated. The necessary clearing and grubbing of the borrow area shall be considered as incidental operations to borrow excavation.

7. DETERMINATION OF DENSITY.

7.1 Control. During the course of construction, fills and backfills shall be regularly and continuously inspected and tested by the Contractor. Moisture-density relations, field control and laboratory control shall conform to the requirements specified herein. Moisture-density relations shall be established by the Contractor. Field density tests shall be performed by the Contractor in sufficient number and in such locations to insure that the specified density is being obtained. Moisture-density relations and field densities shall be reported on forms furnished by the Contracting Officer. One copy of density data (less dry weight determinations) shall be provided on the day each test is taken. The completed test reports shall be provided with the Contractor Quality Report on the work day following the test.

7.1.1 Laboratory Control. One moisture-density relation shall be made for each classification, blend or change in classification of soil materials encountered. Approval of moisture-density relations shall be obtained prior to the compaction of any material in the work. The moisture-density relations shall be determined in a laboratory in accordance with AASHTO T 180, Method D, or ASTM D 1557, Method D, modified as follows:

a. All material over 3/4 inch in size will be removed and replaced with an equal portion of material between 0.187 inch (No. 4 sieve) and 3/4 inch in size.

b. A separate batch of materials will be used for each compaction test specimen. No materials will be re-used.

c. The desired amount of mixing water will be added for each compaction test specimen, mixed well, and the mixture will be placed in a container with an airtight cover and allowed to cure for 24 hours. A shorter curing time may be allowed where tests show that shortening the curing time will not affect the results.

7.1.2 Field Control. Field in-place density shall be determined in accordance with AASHTO T 191 or ASTM D 1556, except that in each test, the weight of the disturbed sample representing the full depth of layer shall be not less than 10 pounds for fine grain material and 12 pounds for coarse grain material using a scale for weighing of sufficient capacity and sensitive to .01 pounds. The density tests shall be well distributed and shall average not less than one test for each 1000 cubic yards of material. At least one test shall be made in each area processed as a unit.

7.1.3 Moisture-Density Curves for Cohesionless and Cohesive Materials. Cohesionless materials include gravels, gravel-sand mixtures, sands, and gravelly sands. Cohesive materials include clayey and silty gravels, gravel-silt mixtures, clayey and silty sands, sand-clay mixtures, clays, silts, and very fine sands. When results of compaction tests for moisture-density relations are recorded on graphs, cohesionless soils will show straight lines or reverse-shaped moisture-density curves, and cohesive soils will show normal moisture density curves.

8. GENERAL BACKFILLING. After completion of foundation footings and walls and other construction including pipe laying, below the elevation of the final grades, an; prior to backfilling, all forms and shoring if used shall be removed and the excavation shall be cleaned of all trash and debris. Material for backfilling shall consist of the excavation, or borrow of sand, gravel or other materials approved by the Contracting Officer, and shall be free of rock larger than 2/3 the thickness of the layer in which the material is to be placed, trash, lumber, or other debris. Backfill shall be brought to indicated finish grade and shall be placed symmetrically to prevent eccentric loading upon or against structures. Backfill, including trench backfill, shall be placed in horizontal layers not in excess of 8 inches in thickness when machine or equipment compacted and 4 inches in thickness when hand compacted, and shall have the proper moisture content for the required degree of compaction. Each layer shall be compacted by hand or machine tampers or by other suitable equipment to at least 95% maximum density for areas under concrete slabs and footings and to at least 90% maximum density for other areas.

9. PREPARING GROUND SURFACE FOR FILL. After completion of site preparation, areas to receive fill shall be scarified to a depth of 6 inches, uniformly moistened or aerated as required, and compacted at least 90% maximum density. Sloped ground surfaces steeper than one vertical to 4 horizontal on which fill is to be placed shall be plowed, stepped, benched, or broken up in such manner that the fill will bond with the existing surface.

10. FILLS OR EMBANKMENTS. Fills or embankments, herein designated as fills, shall be constructued at the locations and to the lines and grades indicated and/or directed by the Contracting Officer. The completed fill shall correspond to the shape of the typical sections shown on the drawings or shall meet the requirements of the particular case. All suitable material removed from the excavation shall be used insofar as practicable in forming the necessary fills. No excavated material shall be wasted without authorization of the Contracting Officer. Material for fills shall consist of the excavation, or borrow of sand, gravel or other approved material and shall be free from roots, organic material, trash, frozen material and of rock larger than 2/3 the thickness of the layer in which the material is to be placed.

10.1 Placing. Satisfactory material shall be placed in horizontal layers not exceeding 8 inches in loose depth and then compacted. No material shall be placed on surfaces that are muddy, frozen, or contain frost.

10.2 Compaction shall be accomplished by sheepsfoot rollers, pneumatic-tired rollers, steel-wheeled rollers, or other approved equipment well suited to the soil being compacted. Material shall be moistened or aerated as necessary to provide the moisture content that will readily facilitate obtaining the specified compaction with the equipment used. Each layer shall be compacted to not less than 96% maximum density under buildings and structures and to at least 90% maximum density under other areas. The areal limits of compaction of material under structures and buildings shall be 5 feet beyond all sides of the building or structure. The upper 6 inches of fill under paved areas shall be compacted as specified for subgrade preparation.

11. SLABS AT GRADE. Except as otherwise specified, where concrete slabs are placed on natural ground or excavated surfaces, the ground shall be scarified to a depth of 6 inches, uniformly moistened or aerated as required, and compacted to at least 95% maximum density.

12. SUBGRADE PREPARATION FOR PAVED AREAS. After the subgrade has been shaped to line, grade, and cross section, it shall be rolled with an approved power roller until thoroughly compacted. This operation shall include any reshaping and moistening or aerating as required along with the rolling of the subgrade, to obtain proper compaction and the scarifying of native soil not receiving fill to a minimumdepth of 6 inches and compacting of same. Soft or otherwise unsuitable material shall be removed and replaced with suitable material from excavation or borrow as approved. The resulting area and all other low sections, holes, or depressions shall brought to the required grade with approved material, and the entire subgrade shaped to line, grade,and cross section and thoroughly compacted as herein provided. Subgrade compaction for paved areas shall be extended to include the shoulders for a distance of at least one foot beyond edges of the base course, or pavement. Except as otherwise provided, the subgrade shall in every area be compacted to at least 95% maximum density for cohesive soils and 100% maximum density for cohesionless soils for a depth of at least 6 inches.

13. FINISHED EXCAVATION, FILLS, AND EMBANKMENTS. Uniformly smooth grading of all areas covered by the project, including excavated and filled sections and adjacent transition areas, shall be accomplished. The finished surface shall be reasonably smooth, compacted and free from irregular surface changes. The degree of finish shall be that ordinarily obtainable from either bladegrader or scraper operations, except as otherwise specified. The finished surface shall be not more than 0.15 foot above or below the established grade or approved cross section. Ditches shall be finished to permit adequate drainage. The surface of areas to be planted shall be finished to a smoothness suitable for the application of planting materials. The surface of embankments or excavated areas for road construction or other areas to be paved, on which a base course or pavement is to be placed, shall vary not more than 0.05 foot from the established grade and approved cross section.

14. SHOULDER CONSTRUCTION. All shoulder construction shall be done in the proper sequence with any base or surface course construction, as directed by the Contracting Officer. The construction shall be so carried on that the subgrade, shoulders and adjacent slopes and ditches will at all times be drained effectively and adequately. The completed shoulders shall be true to alinement and grade, shaped to drain, and in conformity with the sections shown on the drawings. Completed shoulders shall be kept free of any extraneous accumulations, shall be cleaned and reconditioned when necessary, and shall be maintained until the final inspection and acceptance of the work. When so indicated on the drawings the shoulders shall be compacted as specified for subgrade preparation for paved areas.

15. PROTECTION. Newly graded areas shall be protected from traffic and from erosion, and any settlement or washing away that may occur from any cause, prior to acceptance shall be repaired and grades reestablished to the required elevations and slopes.

* * * * *

SECTION 3B

EXCAVATION, FILLING, AND BACKFILLING FOR BUILDINGS

Index

1. Applicable Publications
2. Definitions
3. Protection of Existing Structures, Utilities, Work, and Vegetation
4. Clearing and Grubbing
5. Topsoil
6. Excavation
7. Filling and Subgrade Preparation
8. Aggregate Base Course (A.B.C.)
9. Backfilling
10. Grading
11. Protection

1. APPLICABLE PUBLICATIONS. The following publications of the issues listed below, but referred to thereafter by basic designation only, form a part of this specification to the extent indicated by the references thereto.

1.1 Federal Specifications (Fed. Spec.).

WW-P-402C & Am-1	Pipe, Corrugated (Aluminum Alloy)
WW-P-405B & Am-1	Pipe, Corrugated (Iron or Steel, Zinc Coated)

1.2 Military Standards.

MIL-STD-619B	Unified Soil Classification System for Roads, Airfields, Embankments and Foundations
MIL-STD-621A & Notices 1 & 2	Test Methods for Pavement Subgrade, Subbase, and Base-Course Materials

1.3 American Association of State Highway and Transportation Officials (AASHTO), Publication.

M 176-76I	Porous Concrete Pipe

1.4 American Society for Testing and Materials (ASTM), Publications.

C 4-62(R 1975)	Clay Drain Tile
C 14-75	Concrete Sewer, Storm Drain, and Culvert Pipe
C 412-74	Concrete Drain Tile
C 444-73	Perforated Concrete Pipe
C 498-65(R 1975)	Perforated Clay Drain Tile
C 508-73	Asbestos-Cement Perforated Underdrain Pipe
C 700-75	Vitrified Clay Pipe, Extra Strength, Standard Strength, and Perforated
D 1557-70	Moisture-Density Relations of Sods Using 10-16, Rammer and 18-inch Drop
D 1556-64(R 1974)	Density of Sods in Place by the Sand Cone Method
D 2311-73	Homogeneous Bituminized Fiber Pipe for General Drainage
D 2417-73	Laminated-Wall Bituminized Fiber Perforated Pipe for Agricultural, Land, and General Drainage

2. DEFINITIONS.

2.1 Satisfactory Materials include materials classified in MIL-STD-619 as SC, SM, ML, and CL.

2.2 Unsatisfactory Materials include materials classified in MIL-STD-619 as Pt, OH, OL, and GM.

2.3 Cohesionless and Cohesive Materials. Cohesionless materials include materials classified in MIL-STD-619 as GW, GP, SW, and SP. Cohesive materials include materials classified as GC, SC, ML, CL, MH, and CH. Materials classified as GM and SM will be identified as cohesionless only when the fines have a plastic index of 0.

2.4 Degree of Compaction required is expressed as a percentage of the maximum density obtained by the test procedure presented in ASTM D 1557.

3. PROTECTION OF EXISTING STRUCTURES, UTILITIES, WORK, AND VEGETATION is specified in the GENERAL PROVISIONS.

4. CLEARING AND GRUBBING shall meet the applicable requirements specified in section: EARTHWORK.

5. TOPSOIL shall be stripped to a depth of 12 inches within the designated excavations and grading lines. Topsoil shall be kept free from subsoil, brush, objectionable weed growth, litter, stones larger than 2 inches in diameter, stumps, roots, and other material that would interfere with planting and maintenance operations. Topsoil shall be transported and deposited in storage piles convenient to areas that are to receive applications of topsoil later.

6. EXCAVATION.

6.1 General. The excavation shall conform to the dimensions and elevations indicated for each building and structure, except as specified hereinafter, and shall include trenching for utility and foundation drainage systems to a point 5 feet beyond the building line of each building and structure, and all work incidental thereto. Excavation shall extend a sufficient distance from walls and footings to allow for placing and removal of forms, installation of services, and for inspection, except where the concrete for walls and footings is authorized to be deposited directly against excavated surfaces. Excavations below indicated depths will not be permitted except to remove unsatisfactory material. Unsatisfactory material encountered below the grades shown shall be removed as directed and replaced with satisfactory material (payment therefor will be made in conformance with the CHANGES clause of the GENERAL PROVISIONS). Satisfactory material removed below the depths indicated without specific direction of the Contracting Officer shall be replaced at no additional cost to the Government, to the indicated excavation grade with satisfactory materials, except that concrete footings shall be increased in thickness to the bottom of the overdepth excavations and overbreak in rock excavation. Satisfactory material shall be placed and compacted as specified in paragraph FILLING AND SUBGRADE PREPARATION. Determination of elevations and measurements of approved overdepth excavation of unsatisfactory material below grades indicated shall be done under the direction of the Contracting Officer.

6.2 Drainage. Excavation shall be performed so that the area of the site and the area immediately surrounding the site and affecting operations at the site will be continually and effectively drained. Water shall not be permitted to accumulate in crawl-space areas and in the excavation. The excavation shall be drained by pumping or other satisfactory methods to prevent softening of the foundation bottom, undercutting of footings, or other actions detrimental to proper construction procedures.

6.3 Classification of Excavation. Excavation will be unclassified regardless of the nature of material encountered.

6.4 Utility and Drain Trenches. Trenches for underground utilities systems and drain lines shall be excavated to the required alinements and depths. The bottoms of trenches shall be graded to secure the required slope and shall be tamped if necessary to provide a firm pipe bed. Recesses shall be excavated to accommodate bells and joints so that pipe will be uniformly supported for the entire length. Rock, where encountered, shall be excavated to a depth 6 inches below the bottom of the pipe, and the overdepth shall be backfilled with satisfactory material in conformance with paragraph BACKFILLING. Separate trenches shall be excavated for sewer, water, and gas pipes, and underground electrical, communication and signal service unless otherwise indicated. Care shall be exercised to minimize disturbance to the aggregate base course or compacted subgrade.

6.5 Excavated Materials. Satisfactory excavated material required for fill or backfill shall be placed in the proper section of the permanent work required under this section or shall be separately stockpiled if it cannot be readily placed. Satisfactory excavated material in excess of that required for the work under this section shall be made available for use in other portions of the permanent site work required for the contract project. Satisfactory material in excess of that required for the permanent work and unsatisfactory material shall be disposed of outside the limits of Government-controlled land and at the Contractor's responsibility. No satisfactory material shall be wasted or used for the convenience of the Contractor unless so authorized. Stockpiles shall be placed, graded, and shaped for proper drainage, giving due consideration to drainage from adjacent properties.

6.6 Final Grade of Surfaces to Support Concrete. Care shall be taken not to disturb the botom of the excavation. Excavation to final grade shall not be made until just before concrete is to be placed.

7. FILLING AND SUBGRADE PREPARATION.

7.1 Satisfactory Materials shall be used in bringing fills to the lines and grades indicated and for replacing unsatisfactory material. Satisfactory material shall be free from roots and other organic matter, trash, debris, frozen materials, and stones larger than 3 inches in any dimension.

7.2 Preparation of Ground Surfaces. Unsatisfactory material in surfaces to receive fill or in excavated areas shall be removed and replaced with satisfactory materials. The surface shall be scarified to a depth of 6 inches before the fill is started. Sloped surfaces steeper than 1 vertical to 4 horizontal shall be plowed, stepped, benched, or broken up so that the fill material will bnd with the existing material. When subgrades are of less than the specified density, the ground surface shall be broken up to a minimum depth of 6 inches, pulverized, and compacted to the specified density. When the subgrade is part fill and part excavation or natural ground, the excavated or natural ground portion shall be scarified to a depth of 12 inches and compacted as specified for the adjacent fill. The placing of satisfactory materials and compaction shall be as specified in paragraphs Placing and Compaction.

7.3 Placing. Satisfactory material shall be placed in horizontal layers not exceeding 8 inches in loose depth and them compacted. No material shall be placed on surfaces that are muddy, frozen, or contain frost.

7.4 Compaction shall be accomplished by sheepsfoot rollers, pneumatic-tired rollers, steel-wheeled rollers, or other approved equipment well suited to the soil being compacted. Material shall be moistened or aerated as necessary to provide the moisture content that will readily facilitiate obtaining the specified compaction with the equipment used. Each layer shall be compacted to not less than the percentage of maximum density specified below:

	Percent D 1557 maximum density	
	Cohesive material	Cohesionless material
Fill, embankment, and backfill		
Under proposed structures, building slabs, steps, and paved areas	90	95
Under sidewalks and grassed areas	85	90
Subgrade		
Under building slabs, steps, and paved areas, top 12 inches	95	100
Under sidewalks, top 6 inches	85	90

7.5 Tests. Testing shall be the responsibility of the Contractor and shall be performed at no additional cost to the Government. Testing shall be performed by an approved commercial testing laboratory or may be performed by the Contractor subject to approval. Laboratory tests for moisture-density relations shall be made in accordance with the procedure referenced in paragraph Degree of Compaction, hereinbefore. Field tests for density and moisture content will be performed in sufficient number to insure that the specified density is being obtained. The field tests will be performed in accordance with ASTM 1556. Copies of test results shall be furnished to the Contracting Officer.

7.6 Reconditioning of Subgrades. Approved compacted subgrades that are disturbed by Contractor's operations or adverse weather shall be scarified and compacted as specified hereinbefore to the required density prior to further construction thereon. Recompaction over underground utilities and heating lines shall be by hand tamping.

8. AGGREGATE BASE COURSE (A.B.C.) under concrete floor and area-way slabs on grade shall consist of clean, crushed, nonporous rock, crushed gravel, or uncrushed gravel. The maximum particle size shall be 1-1/2 inches and no more than 2 percent by weight shall pass the No. 4 sieve size. The capillary water barrier shall be placed directly on the subgrade meeting density and elevation requirements and shall be compacted with a minimum of two passes of a hand-operated plate-type vibratory compactor.

9. BACKFILLING shall not begin until construction below finish grade has been approved, underground utilities systems have been inspected, tested, and approved, forms removed, and the excavation cleaned of trash and debris. Backfill shall be brought to indicated finish grade. Backfill shall not be placed in wet areas. Backfill shall be of satisfactory materials placed and compacted as specified under paragraph FILLING AND SUBGRADE PREPARATION. Where pipe is coated or wrapped for protection against corrosion, the backfill material up to an elevation 2 feet above sewerlines and one foot above other utility lines shall be free from stones larger than one inch in any dimension. Heavy equipment for spreading and compacting backfill shall not be operated closer to foundation or retaining walls than a distance equal to the height of backfill above the top of footing; the area remaining shall be

compacted in layers not more than 4 inches in compacted thickness with power-driven hand tampers suitable for the material being compacted. Backfill shall be placed carefully around pipes or tanks to avoid damage to coatings, wrappings, or tanks. Backfill shall not be placed against foundation walls prior to 7 days after completion of the walls. As far as practicable, backfill shall be brought up evenly on each side of the wall and sloped to drain away from the wall.

10. GRADING. Areas 5 feet outside of each building and structure line shall be constructed true to grade, shaped to drain, and be maintained free of trash and debris until final inspection has been completed and the work has been accepted.

11. PROTECTION. Settlement or washing that occurs in graded, (topsoiled), or backfilled areas prior to acceptance of the work shall be repaired and grades reestablished to the required elevations and slopes.

* * * * *

SECTION 3C

EXCAVATION, TRENCHING, AND BACKFILLING FOR UTILITIES SYSTEMS

Index

1. Applicable Publications
2. General
3. Excavation
4. Removal of Utility Lines
5. Backfilling
6. Test for Displacement of Sewers

1. APPLICABLE PUBLICATIONS. The following publications of the issues listed below, but referred to thereafter by basic designation only, form a part of this specification to the extent indicated by the references thereto.

1.1 American Association of State Highway Officials Standard.

T 147-54	The Field Determination of Density of Soil In-Place

1.2 Military Standard.

MIL-STD-621A	Test Methods for Pavement Subgrade, Subbase, and Base-Course Materials

2. GENERAL. This section covers the excavation, trenching, and backfilling for utilities systems to the points of connection with the building utilities 5 feet outside the building to be served.

3. EXCAVATION.

3.1 General. All excavation of every description and of whatever substances encountered shall be performed to the depths indicated or as otherwise specified. During excavation, material suitable for backfilling shall be piled in an orderly manner a sufficient distance from the banks of the trench to avoid overloading and to prevent slides or cave-ins. All excavated materials not required or suitable for backfill shall be removed and wasted as indicated or as directed. Grading shall be done as may be necessary to prevent surface water from flowing into trenches or other excavations, and any water accumulating therein shall be removed by pumping or by other approved methods. Sheeting and shoring shall be done as may be necessary for the protection of the work and for the safety of personnel. Unless otherwise indicated, excavation shall be by open cut except that short sections of a trench may be tunneled if, in the opinion of the Contracting Officer, the pipe, cable, or duct can be safely and properly installed and backfill can be properly tamped in such tunnel sections.

3.2 Trench Excavation. Trenches shall be of the necessary width for proper laying of pipe, cables, or ducts. The banks of pipe trenches shall be as nearly vertical as practicable. Care shall be taken not to overexcavate. The bottom of the trenches shall be accurately graded to provide uniform bearing and support for each section of the pipe on undisturbed soil at every point along its entire length, except for the portions of the pipe sections where it is necessary to excavate for bell holes and for the proper sealing of pipe joints and as hereinafter specified. Bell holes and depressions for joints shall be dug after the trench bottom has been graded, and, in order that the pipe rest on the prepared bottom for as nearly its full length as practicable, bell holes and depressions shall be only of such length, depth, and width as required for properly making the particular type of joint. Stones shall be removed as necessary to avoid point bearing. Except as hereinafter specified for wet or otherwise unstable material, overdepths shall be backfilled as and with materials specified for backfilling the lower portion of trenches. Whenever wet or otherwise unstable material that is incapable of properly supporting the pipe is encountered in the bottom of the trench, such material shall be overexcavated to a depth to allow for construction of a stable pipe bedding, payment therefor will be made in conformance with the clause: CHANGES of the contract. The trench shall be backfilled to the proper grade with suitable approved materials. Special requirements relating to specific utilities are as follows.

(1) Sanitary Sewers. The width of the trench at and below the top of the pipe shall be such that the clear space between the barrel of the pipe and the trench wall shall not exceed 8 inches on either side of the pipe. The width of the trench above that level shall be as wide as necessary for sheeting and bracing and the proper performance of the work. The bottom of the trench shall be rounded so that at least the bottom quadrant of the pipe shall rest firmly on undisturbed soil for as nearly the full length of the barrel as proper jointing operations will permit. This part of the excavation shall be done manually only a few feet in advance of the pipe laying by men skilled in this type of work.

(2) Water Distribution Lines. Unless otherwise indicated, trenches shall be graded to avoid high points with the necessity of placing vacuum and relief valves in the waterlines. Trenches shall be of a depth to provide a minimum cover over the top of the pipe of 3 feet from the existing ground surface or the indicated finished grade and to avoid interference of the waterlines with other utlities.

(3) Electrical System. The banks of trenches for electrical cables and duct lines need not be kept vertical but may be sloped or widened to such general limits as may be set by the Contracting Officer, provided there is no interference with other utilities. Overexcavating and backfilling with suitable selected material where rock is encountered will not be required except for a gradual cushioning towards points of abrupt dropoff of the rock to levels considerably below the grade of the duct.

3.3 Excavation for Appurtenances. Excavation for manholes and similar structures shall be sufficient to leave at least 12 inches in the clear between the outer surfaces and the embankment or timber that may be used to hold and protect the banks. Any overdepth excavation below such appurtenances that has not been directed will be considered unauthorized and shall be refilled with sand, gravel, or concrete, as directed, at no additional cost to the Government.

4. REMOVAL OF UTILITY LINES. When utility lines that are to be removed are encountered within the area of operations, the Contracting Officer shall be notified in ample time for the necessary measures to be taken to prevent interruption of the service.

5. BACKFILLING. The trenches shall not be backfilled until all required pressure tests are performed and until the utilities systems as installed conform to the requirements specified in the several sections covering the installation of the various utilities. Where, in the opinion of the Contracting Officer, damage is likely to result from withdrawing sheeting, the sheeting shall be left in place and the contract price will be adjusted accordingly. Except as otherwise specified for special conditions of overdepths, trenches shall be backfilled to the ground surface with selected material that is suitable for the specified compaction and as hereinafter specified. Trenches improperly backfilled shall be reopened to the depth required for proper compaction, then refilled and compacted as specified, or the condition shall be otherwise corrected as approved. Pavement, base course, and compacted subgrade disturbed by trenching operations shall be replaced in an acceptable manner with materials equal to the adjacent compacted subgrade, base course, and pavement for a minimum distance of 12 inches on each side of the trench.

5.1 Lower portion of Trench. Backfill material shall be deposited in 6-inch-maximum-thickness layers and compacted with suitable tampers to the density of the adjacent soil or graded as hereinafter specified until there is a cover of not less than 2 feet over sewers and one foot over other utility lines. The backfill material in this portion of the trench shall consist of a selected material at a moisture content that will facilitate compaction, free from stones larger than 3 inches in any dimension and hard clods and frozen conglomerates larger than 6 inches in any dimension, except that where the pipe is coated or wrapped for protection against corrosion the backfill material shall be free from stones larger than one inch in any dimension. If any portion of the cover in the lower portion of the trench is in the depth of special compaction and materials requirements under pavement, the special requirements shall control. Special care shall be taken not to damage the coating or wrapping of pipes.

5.2 Remainder of Trench. Except for special materials for pavements, the remainder of the trench shall be backfilled with material that is free of stones larger than 6 inches or 1/2 the layered thickness, whichever is smaller, in any dimension. Backfill material shall be deposited in layers not exceeding the thickness specified, and each layer shall be compacted to the minimum density specified as applicable to the particular area except that in areas other than under roadways, parking areas, and other paved areas subject to vehicular movement, settling of granular, noncohesive materials with water will be permitted. Degree of compaction shall be as follows, expressed as a percentage of the maximum density obtained by the test procedure specified in section: EARTHWORK.

(1) Under Pavements. Six-inch layers, 90 percent maximum density for cohesive soils and 95 percent maximum density for cohesionless soils up to the elevations at which the requirements for pavement subgrade materials and compaction control.

(2) Under Turfed or Seeded Lawn Areas and Sidewalks. Twelve-inch layers, 85 percent maximum density for cohesive soils and 90 percent maximum density for cohesionless soils.

(3) Under Other Areas. Two-foot layers, density equal to the adjacent soil.

5.3 Determination of Density. Field testing and laboratory tests for moisture-density relations shall be determined in accordance with the requirements of section: EARTHWORK.

6. TEST FOR DISPLACEMENT OF SEWERS. Sewer mains will be checked by the Contracting Officer to determine whether any displacement of the pipe has occurred after the trench has been backfilled to 2 feet above the pipe and tamped as specified. The test will be as follows: A light will be flashed between manholes, or, if the manholes have not as yet been constructed, between the locations of the manholes, by means of a flashlight or by reflecting sunlight with a mirror. If the illuminated interior of the pipe line shows poor alinement, displaced pipe, or any other defects, the defects as designated by the Contracting Officer shall be satisfactorily remedied.

* * * * *

SECTION 3D

LAKE LINING

Index

1. Applicable Publications
2. General
3. Materials
4. Rates of Materials Applications and Density
5. Sampling and Testing
6. Storage of Sodium Chloride
7. Equipment
8. Weather Limitations
9. Drainage
10. Preparation of Subgrade
11. Grade Control
12. Mixing and Placing Materials
13. Compaction
14. Finishing, Lake Lining Surface
15. Construction Joints
16. Correction of Defective Areas
17. Edges of Lake Lining
18. Protection

1. APPLICABLE PUBLICATIONS. The following publications of the issues listed below, but referred to thereafter by basic designation only, form a part of this specification to the extent indicated by the references thereto.

1.1 American Society for Testing and Materials (ASTM) Specifications.

D 420-69	Investigating and Sampling Soils and Rock for Engineering Purposes
D 698-70	Moisture Density Relations of Soils Using a 5.5-lb Rammer and a 12-inch drop
D 1556-64	Density of Soil In Place by the Sand-Cone Method

2. GENERAL. Lake lining shall consist of a uniormly blended mixture of soil and sodium chloride placed and compacted on the areas indicated.

3. MATERIALS.

3.1 Soil shall consist of material obtained from the borrow area within the areas indicated. Material shall be those classified by the Unified Soil Classification System as sandy clay (CL) with 100 percent of the material passing the No. 4 sieve and at least 65 percent passing the No. 200 sieve. Stones larger than 3 inches, sticks, debris, vegetable matter, and other deleterious matter shall be removed. Suitable material shall be transported and deposited in storage piles convenient to the mixing plant.

3.2 Sodium chloride (NaCl) shall be finely ground having at least 95 percent passing the No. 30 sieve and less than 5 percent passing the No. 100 sieve. Chemical composition shall not be less than 97 percent sodium chloride. Rock salt may be used at the option of the Contractor.

3.3 Water shall be clean, fresh, and free from injurious amounts of oil, acid, salt, alkali, organic matter, and other substances deleterious to the hardening of soil-salt, and shall be subject to approval.

4. RATES OF MATERIALS APPLICATIONS AND DENSITY. The rate of application of sodium chloride for the mixture and the optimum water content will be determined by the Contracting Officer from soil samples submitted by the Contractor. Samples shall be taken as required in paragraph SAMPLING, TESTING, AND APPROVAL. The density of the compacted soil-salt mixture shall be at least 95 percent of the maximum density obtained in the laboratory as specified in paragraph SAMPLING AND TESTING. Sodium chloride shall be applied at the rate of 0.27 to 0.30 percent by weight of dry soil. The exact quantities, that may be varied to suit field conditions, will be determined by the Contracting Officer.

5. SAMPLING AND TESTING.

5.1 Sampling and testing shall be responsibility of the Contractor and shall be performed at no additional cost to the Government. Sampling and testing shall be performed by an approved commercial testing laboratory or may be performed by the Contractor subject to approval. Tests shall be performed in sufficient number to insure that materials meet the specified requirements. Copies of the test rsults shall be furnished to the Contracting Officer. Soil samples shall be obtained in conformance with ASTM D 420. Samples for determining the optimum moisture content and the specified degree of compaction shall be representative of mixtures obtained from the area being processed. Samples for determining the density of the compacted mixture shall be taken in conformance with ASTM D 1556. Where necessary, the sampling will be supervised by the Contracting Officer.

5.1.1 Density Tests. The density shall be determined in the field in accordance with ASTM D 1556. The maximum density shall be determined in the laboratory in accordance with ASTM D 698, Method D. The density tests shall be well distributed and shall average not less than one test for each 1,000 cubic yards of material. At least one test shall be made in each area processed as a unit.

6. STORAGE OF SODIUM CHLORIDE. Sodium chloride shall be stored in a manner to prevent the absorption of moisture.

7. EQUIPMENT. Any combination of equipment, plant, machines, or tools may be used that will produce a mixture conforming to these specifications. Sufficient equipment shall be provided to perform the work continuously. Equipment used in placing and compacting shall be of a type that will not damage the subgrade. Equipment, plant, machines, and tools used in the performance of the work covered by this section shall be approved prior to commencement of work and shall be maintained in satisfactory working condition at all times. The Contracting Officer shall have access at any time to all parts of the plant for the purpose of checking the adequacy of the equipment in use, inspecting the operation of the plant, and verifying the weights, proportions, and character of materials.

7.1 Rollers.

7.1.1 Steel-Wheel Rollers shall be the self-propelled, three-wheel or tandem type, weighing not less than 10 tons, and shall be suitable for rollig soil-cement mixtures. The wheels shall be equipped with adjustable scrapers.

7.1.2 Rubber-Tired Rollers shall be self-propelled and equipped with not less than 9 rubber-tired wheels mounted on 2 axles in such manner that the rear group of tires will not follow in the tracks of the forward group. The rubber-tired roller shall also be equipped with suitable boxes or platforms for ballast loading and shall be loaded as directed. The tires shall be uniformly inflated.

7.2 Mixing Plants, if used, shall be designed and constructed to thoroughly mix the soil, sodium chloride, and water. The plants shall be equipped to accurately measure the required amounts of sodium chloride and water while the plants are in operation.

7.3 Mechanical Spreader shall be self-propelled or attached to a propelling unit capable of moving the spreader and material truck. The device shall be steerable and shall be carried on rubber tires or drum-type wheel rollers that will not disturbthe underlying layer. The spreader shall contain a hopper, an adjustable screen, and outboard bumper rolls and shall be so designed that there will be a uniform, steady flow of material from the hopper. The spreader shall be capable of laying material across the full width of the lane to a uniform thickness and to a uniform loose density so that when compacted the layer or layers shall conform to the thickness and grade requirements indicated.

7.4 Blade Graders shall have a wheel base not less than 15 feet, a blade not less than 12 feet, and shall be self propelled.

7.5 Sprinkling Equipment shall consist of tank trucks, pressure distributors, or other equipment designed to apply water uniformly and at controlled quantities to variable widths of surface.

7.6 Hauling Equipment shall consist of pneumatic-tired vehicles having dump bodies suitable for spreading materials uniformly or dumping into spreading machines.

7.7 Miscellaneous Equipment. Other equipment shall be suitable for construction of soil-salt mixture.

8. WEATHER LIMITATIONS. Uncompacted soil-salt mixture that is wet by rain so that the average moisture content at the time of compaction exceeds the tolerance specified in the paragraph MIXING AND PLACING MATERIALS, hereinafter, or any portion of the completed areas that is damaged shall be completely removed and replaced in accordance with the paragraph CORRECTION OF DEFECTIVE AREAS, hereinafter.

9. DRAINAGE. Adequate drainage shall be provided during the entire construction period to prevent water from collecting or standing on the area to be lined or on the pulverized, mixed, or partially mixed material.

10. PREPARATION OF SUBGRADE. Subgrade areas shall be cleaned of debris. The areas will be inspected by the Contracting Officer for adequate compaction and shall be capable of withstanding, without displacement, the compaction specified. Soft yielding spots and ruts or other irregularities in the subgrade shall be corrected. The material in the affected areas shall be loosened and unsatisfactory material removed. Approved material shall be added where required. The subgrade shall then be shaped to line, grade, and cross section, and shall be compacted to 95 percent of maximum density as specified in the section: EARTHWORK. Debris and removed in-place material designated as unsuitable shall be disposed of in accordance with the paragraph DISPOSAL OF UNSUITABLE MATERIALS, hereinafter.

11. GRADE CONTROL. The finished and completed lining shall conform to the lines, grades, cross section, and dimensions indicated. The lines and grades indicated shall be maintained by means of line and grade stakes placed by the Contractor at the site of the work in accordane with SPECIAL PROVISIONS.

12. MIXING AND PLACING MATERIALS. Methods of mixing and placing of materials shall be as approved. No sodium chloride shall be applied if the soil-moisture content exceeds 6 percent above the optimum moisture content specified for the mixture. When application of water and mixing are completed, the moisture in the mixture, on the basis of dry weight, shall not be below the specified optimum moisture content of the mixture nor shall it be more than 6 percent of the specified optimum moisture content. Previously constructed layers shall be cleaned of loose and foreign matter. Mixing of the mixture with the underlying course shall be prevented. A central plant may be used to mix the soil, sodium chloride, and water. Soil and sodium chloride shall be dry-mixed sufficiently to prevent balls from forming when water is added. The plant shall be capable of producing a uniform mixture with the specified sodium chloride and moisture contents. The underlying material and/or previously constructed layer shall be moistened and the mixture then placed in a uniform layer with mechanical spreaders. Not more than 60 minutes shall elapse between the start of the moist mixing and the start of compaction of the treated layer. Each successive layer shall be placed as soon as practicable after the preceding layer has been completed. Each layer shall be uniform in thickness and surface contour and in such quantity that the completed layer, after compaction, will not be in excess of 6 inches.

12.1 Optional Method. If approved by the Contracting Officer, in writing, a machine or a combination of machines may be used to mix the soil, water, and sodium chloride; spread; compact; and finish the mixture in a continuous operation, in accordance with this specification.

13. COMPACTION. Compaction shall be started immediately after placing the mixture and shall be completed within 45 minutes. The loose mixture shall be uniformly and continuously compacted until the entire depth and width of the layer are compacted to 95 percent of the maximum density. The moisture content shall be maintained between 2 percent below and 2 percent above optimum at all times through the rolling but shall be controlled to prevent the mixture from becoming unstable during compaction. The speed of the roller at all times shall be such that displacement of the mixture does not occur. Areas that are inaccessible to rollers shall be compacted with mechanical tampers.

14. FINISHING, LAKE LINING SURFACE. If necessary, the lining surface shall be lightly scarified to eliminate any imprints made by the compacting equipment. The surface shall then be thoroughly compacted to the specified density to the extent necessary to provide a smooth, dense, uniform surface that is free of surface checking, ridges, or loose material. The finishing operations shall be completed within 2 hours after completion of mixing operations. In places not accessible to finishing and shaping equipment, the mixture shall be compacted with mechanical tampers to the density specified and shall be shaped and finished by hand methods. Any portion of the compacted mix that has density less than that specified, that has not properly hardened, or that is improperly finished shall be corrected in accordance with the paragraph CORRECTION OF DEFECTIVE AREAS, hereinafter. The finished surface shall be reasonably smooth, compacted, and free from irregular surface changes. The finished surface shall be not more than 0.15 foot above or below the established grade or approved cross section.

15. CONSTRUCTION JOINTS. At the start of each day's construction, a straight transverse construction joint shall be formed by cutting back into the previous work to form a true vertical face free of loose or shattered material. Material along construction joints not properly compacted shall be removed and replaced with material that is mixed, moistened, and compacted in accordance with this specification.

16. CORRECTION OF DEFECTIVE AREAS. Defective areas shall be remedied by removing defective material for the full depth and width of the area as directed and replacing with new mixture in accordance with this specification at no additional cost to the Government. The addition of a thin layer of mixture will not be permitted. Correction of defective areas shall be made in a manner that will assure restoration of a uniform surface and durability of the portion repaired.

17. EDGES OF LAKE LINING. The edges of the lake and lake lining shall have a gravel protection as indicated. Gravel shall be washed river run material, well graded, with a maximum size of 4 inches and not more than 10 percent passing a No. 4 sieve. Gravel shall be placed in a manner to prevent segregation of sizes and voids.

18. PROTECTION. Immediately after completion of compaction, the exposed surfaces shall be kept moist until the lake has been filled with water. All surfaces bonding to succeeding layers shall be kept continuously moist until covered by an additional layer. If cracking occurs due to drying, the cracked portions shall be removed and replaced by the Contractor at no additional cost to the Government.

* * * * *

SECTION 3E

POLYVINYL CHLORIDE (PVC) PLASTIC LINING

Index

1. Applicable Publications
2. General
3. PVC Materials
4. Factory Fabrication
5. Placing of PVC Lining

1. APPLICABLE PUBLICATIONS. The following publications of the issues listed below, but referred to thereafter by designation only, form a part of this specification to the extent indicated by the references thereto.

1.1 American Society of Testing and Materials (ASTM) Publications.

D 792-66 (1970)	Specific Gravity and Density of Plastics by Displacement
D 882-73	Tensile Properties of Thin Plastic Sheeting
D 1004-66 (1970)	Tear Resistance of Plastic Film and Sheeting
D 1203-67 (1974)	Loss of Plasticizer from Plastics (Activated Carbon Methods)
D 1204-54 (1971)	Changes in Linear Dimensions of Nonrigid Thermoplastic or Film, Measuring
D 1239-55 (1971)	Resistance of Plastic Films to Extraction by Chemicals
D 1593-61 (1969)	Nonrigid Vinyl Chloride Plastic Sheeting
D 1790-62 (1970)	Brittleness Temperature of Plastic Film and Thin Sheeting

2. GENERAL. The work covered by these specifications consists of installing a polyvinyl chloride (PVC) plastic lining around each pipe into the lake where shown on the drawings.

3. PVC MATERIALS.

3.1 General. The materials supplied under these specifications shall be first quality products designed and manufactured specifically for the purposes of this work, and which have been satisfactorily demonstrated by prior use to be suitable and durable for such purposes. The manufacturer shall show where a minimum of 500,000 square feet (46,000 sq. m.) of its material has been installed for lining hydraulic structures.

3.2 Physical Characteristics. The PVC materials shall have the following physical characteristics.

Property	30 Mil	Test Method
Thickness	± 5%	ASTM D-1593
Specific Gravity	1.23	ASTM D-792-A
Tensile Strength, lbs./in. width	66	ASTM D-882, Method B
Modulus @ 100% Elongation, lbs./in.	30	ASTM D-882, Method B
Ultimate Elongation, %	325	ASTM D-882, Method B
Oven Aging (Wt. loss, % max.)	0.4	2" x 4" Sample 16 hrs. in a forced air circulating oven @ 121 degrees F.
Test Resistant:		
A. Elmendorf, grams	6000	ASTM D-1922
B. Graves Tear, lbs. min.	8.25	ASTM D-1004
Low Temperature Impact, degrees F.	-20	ASTM D-1790
Water Extraction (% loss max. 104 Degrees F for 24 hrs.)	.15	ASTM D-1239
Volatility % loss max.	.75	ASTM D-1203, Method A
Dimensional Stability (@ 212 degrees F., 15 min.) % max. change	5	ASTM D-1204

3.3 PVC Materials shall be manufactured from domestic virgin polyvinyl chloride resin and specifically compounded for the use in hydraulic facilities. Reprocessed material shall not be used. It shall be neutral gray to black in color and produced in a standard minimum width of at least 76 inches (193 cm). Thickness shall be as shown on the drawings. Certification test results showing that the sheeting meets the specifications shall be supplied on request.

4. FACTORY FABRICATION. The manufacturer shall show where a minimum of 500,000 square feet (46,000 sq. m.) of its material has been installed for lining hydraulic structures. Lap joints with a minimum joint width of 1/2 inch (13 mm) shall be used for fabricating individual calendar widths into large panels. Factory made splices shall have a strength of 80% of the specified sheet strength. After fabrication, the lining shall be accordion folded in both directions and packaged for minimum handling in the field. Shipping boxes shall be substantial enough to prevent damage to contents.

5. PLACING OF PVC LINING.

5.1 General. Installation shall be performed by a Contractor that has previously installed a minimum of 500,000 square feet (46,000 sq. m.) of this material or by a Contractor that has a fabricator field representative in attendance. The surface (substrate) to receive the liner shall be smooth, and free of sharp objects that could puncture the lining. All vegetation must be removed. The PVC lining shall be placed over the prepared surfaces to be lined in such a manner as to assure minimum handling. It shall be sealed to all concrete structures and other openings through the lining in accordance with details shown on the drawings. The lining shall be closely fitted and sealed around inlets, outlets and other projections through the lining. Any portion of lining damaged during installation shall be removed or repaired by using an additional piece of lining as specified hereinafter.

5.2 Field Joints. Lap joints will be used to seal factory fabricated panels of PVC to the PVC boot around the pipe. Lap joints shall be formed by lapping the edges of panels a minimum of 2 inches (50 mm). The contact surfaces of the panels shall be wiped clean to remove all dirt, dust or other foreign materials. Sufficient cold-applied vinyl to vinyl bonding adhesive shall be applied to the contact surfaces in the joint area, and the two surfaces pressed together immediately. Any wrinkles shall be smoothed out. Field made splices shall have a strength of 80% of the specified sheet strength.

5.3 Repairs to PVC. Any necessary repairs to the PVC shall be patched with the lining material itself and cold applied vinyl to vinyl splicing adhesive. The splicing adhesive shall be applied to the contact surfaces of both the patch and lining to be repaired, and the two surfaces pressed together immediately. Any wrinkles shall be smoothed out.

5.4 Quality of Workmanship. All joints, on completion of the work shall be tightly bonded. Any lining surface showing injury due to scuffing, penetration by foreign objects or distress from rough subgrade shall, as directed by the Engineer, be replaced or covered and sealed with an additional layer of PVC of the proper size.

* * * * *

SECTION 4C

CONCRETE FOR STREET BRIDGES

Index

1. Applicable Publications
2. Deleted
3. Composition
4. Quality
5. Cement, Air-Entraining Admixture, Aggregates and Water
6. Proportioning of Concrete
7. Batching and Mixing, and Conveying
8. Placing
9. Construction Joints
10. Finishing
11. Curing and Protection
12. Forms and Falsework
13. Furnishing and Placing Steel Reinforcement and Embedded Items
14. Gratings
15. Pervious Backfill Material
16. Guardrail

1. APPLICABLE PUBLICATIONS. The following publications of the issues listed below, but referred to thereafter by basic designation only, form a part of this specification to the extent indicated by the references thereto.

1.1 American Association of State Highway and Transportation Officials.

M 111-74	Zinc (Hot-Galvanized) Coatings on Products Fabricated from Rolled, Pressed, and Forged Steel Shapes, Plates, Bars and Strip
M 133-73	Preservatives and Pressure Treatment Process for Timber
M 180-74	Corrugated Sheet Steel beams For Highway Guardrail

1.2 American Society for Testing and Materials (ASTM) Publications.

A123-73	Zinc (Hot-Galvanized) Coatings on Products Fabricated from Rolled, Pressed, and Forged Steel Shapes, Plates, Bars, and Strip
A153-73	Zinc Coating (Hot-Dip) on Iron and Steel Hardware
A525-76	Steel Sheet, Zinc-Coated (Galvanized) by the Hot-Dip Process, General Requirements

1.3 American Wood Preservers Association.

C1-74	All Timber Products – Preservative Treatment by Pressure Processes Revised Apr 1976
C2-74	Lumber, Timbers, Bridge Ties and Mine Ties – Preservative Treatment by Pressure Processes Revised Apr 1976
M2-74	Standard for Inspection of Treated Timber Products. Revised April 1976

1.4 U.S. Department of Commerce Publication, National Bureau of Standards Publication.

PS 1-66 (Reprinted July 1970 with Softwood Plywood, Construction and Industrial Amendments)

1.5 Military Specification.

MIL-W-13518C(1)	Wood Preservatives Tetrachlorophenol and Pentachlorophenol, Surface Sealing Compound

1.6 State of California, Department of Transportation, Materials Manual, Testing and Control Procedures (Calif).

342-C	Method of Test for Pavement Surface Skid Resistance

1.7 West Coast Lumber Inspection Bureau (WCLB).

No. 16 (Effective September 1, 1970)	Standard Grading Rules for West Coast Lumber

1.8 Western Wood Products Association (WWPA).

Grading Rules for Western Lumber
July 1, 1974

2. DELETED.

3. COMPOSITION. Concrete shall be composed of Portland cement, water, fine and coarse aggregate. An air-entraining admixture shall be used when box culvert becomes integral parts of the channel structure.

4. QUALITY.

4.1 General. Except as otherwise specified for the bridge superstructure, the concrete mixtures will be designed by the Contracting Officer who will determine the required quality of the concrete for the structures covered by these specifications.

4.2 Superstructure.

4.2.1 General. In order to allow earlier form removal, upon request, permission will be granted to the Contractor to design the concrete required for the superstructure, consisting of decks and the Government will accept this concrete and also permit the removal of forms on the basis of concrete cylinder tests. If the Contractor elects this option, removal of forms will be governed by stipulations contained in the paragraph: FORMS AND FALSEWORK, and concrete will be accepted on the basis of the paragraph "Contractor-Designed Concrete for Superstructure". If the Contractor does not elect to accept the option as specified herein, design of the concrete for this item will be made by the Contracting Officer, and form removal will be authorized on the basis of the time table in the paragraph: FORMS AND FALSEWORK.

4.2.2 Contractor-Designed Concrete for Superstructure.

4.2.2.1 The concrete for box culvert walls shall contain not less than 564 pounds of cement per cubic yard, and shall attain a compressive strength of 3,000 pounds per square inch in less than 28 days. The aggregate and cement shall be as specified herein. Cement in excess of 564 pounds per cubic yard is considered to be for the convenience of the Contractor and no payment for such cement will be made.

4.2.2.2 The Strength Quality of the concrete proposed for use shall be established by tests made in advance of the beginning of operations, using the consistencies suitable for the work. Trail design batches and testing shall be the responsibility of the Contractor. Specimens shall be made and cured in accordance with ASTM Specification C192 and tested in accordance with ASTM C39. A curve representing the relationship between the water content and the average 28 day compressive strength, shall be established for all the compressive strengths specified. The curve shall be established by at least 3 points, each point representing average values from at least 4 test specimens. The maximum allowable water content for the concrete for the superstructure shall be as determined from this curve and shall correspond to a compressive strength 15 percent greater than that specified, but in no case shall it exceed 312 pounds per cubic yard, plus 70 pounds for each cwt of cement in excess of 564 cwt per cubic yard.

4.2.2.3 Prior to Commencing Operations, the Contractor shall furnish a statement to the Contracting Officer giving the proportions by weight (dry) of cement and of line and coarse aggregates that will be used in the manufacture of the concrete proposed for use. Statement shall be accompanied by test reports or other evidence satisfactory to the Contracting Officer attesting that the proportions thus selected will produce concrete of qualities specified. No substitutions shall be made in the materials used in the work without additional tests in accordance herewith, to show that the quality of the concrete is satisfactory.

4.2.2.4 The Contractor shall provide for test purposes a series of sets of 3 cylinders each, taken from each 250 cubic yards or fraction thereof, or each day's pour, whichever is less. Test specimens shall be made and cured in accordance with ASTM C 31, except that after removal from the mold, specimens shall be stored as near as practicable to the bridge site and shall receive the same protection from the elements during curing as those portions of the structure which they represent.

5. CEMENT, AIR-ENTRAINING ADMIXTURE, AGGREGATES AND WATER shall conform to the applicable requirements of the section: CONCRETE (FOR BUILDING CONSTRUCTION).

6. PROPORTIONING OF CONCRETE. The proportions of all material entering into the concrete shall be as directed and shall conform to the applicable requirements of the section: CONCRETE (FOR BUILDING CONSTRUCTION), except as otherwise specified herein in the paragraph: QUALITY.

7. BATCHING AND MIXING, AND CONVEYING shall conform to the applicable requirements of the section: CONCRETE (FOR BUILDING CONSTRUCTION).

8. PLACING.

8.1 General. The method of placing concrete shall conform to the applicable requirements of the section: CONCRETE (FOR BUILDING CONSTRUCTION), except as otherwise specified herein.

8.2 Placing Concrete. The concrete in each integral part of the structure shall be placed continuously, and the Contractor will not be allowed to commence work on any such part unless sufficient inspected and approve material for the concrete is on hand and his forces and equipment are sufficient to complete the part without interruption in the placing of the concrete. Joints in the concrete due to stopping work shall be avoided as far as possible. Such joints, when necessary, shall be constructed as directed.

8.3 Drains in Walls. Drain holes and weep holes shall be constructed in abutment walls as shown. Abutment wall drains shall be covered at the back face of the wall with hardware cloth. Hardware cloth shall be a commercial quality, approximately 4-mesh wire cloth of aluminum or galvanized steel wire. The aluminum wire, and steel wire, before galvanizing, shall have a diameter of 0.03 inch, minimum. Hardware cloth shall be mounted in the forms prior to placing concrete in such a manner that the wire is firmly bonded to the concrete or may be fastened to the exterior of the concrete surface by masonry nails or other approved methods. Alternative methods of providing screened drain hole openings may be submitted for approval.

9. CONSTRUCTION JOINTS.

9.1 Except as specified herein construction joint treatment and expansion, contraction and vertical construction joints shall conform to the applicable requirement of the section: CONCRETE (FOR BUILDING CONSTRUCTION).

9.2 Construction joints shall be made only where located on the drawings or shown in the placing schedule, unless otherwise approved by the Contracting Officer.

9.3 Horizontal construction joints may be made without keys, except when keys are shown on the drawings. Surfaces of fresh concrete at horizontal construction joints shall be rough floated sufficiently to thoroughly consolidate the concrete at the surface without completely removing surface irregularities.

9.4 In case of emergency, construction joints shall be made as directed by the Contracting Officer. When it is necessary to make a joint because of an emergency, additional reinforcing steel shall be furnished and placed across the joint as directed by the Contracting Officer. Such additional reinforcing steel shall be furnished and placed by the Contractor at his expense.

9.5 All construction joints shall be cleaned of surface laitance, curing compound and other foreign materials before fresh concrete is placed against the surface of the joint. Abrasive blast methods shall be used to clean horizontal construction joints to the extent that clean aggregate is exposed. All construction joints shall be flushed with water and allowed to dry to a surface dry condition immediately prior to placing concrete.

10. FINISHING.

10.1 General. Finishing shall conform to the applicable requirements of the section: CONCRETE (FOR BUILDING CONSTRUCTION).

10.2 Decks. After the concrete has been placed an; consolidated, the surface of the concrete shall be carefully struck off by means of a hand-operated strike board operating on headers, or by a finishing machine operating on rails. A uniform deck surface true to the required grade and cross section shall be obtained. Following strike off, the surface of the concrete shall be floated longitudinally. In the event strike off is performed by means of a hand-operated strike board, two separate hand-operated float boards for longitudinal floating shall be provided. The first float shall be placed in operation as soon as the condition of the concrete will permit and the second float shall be operated as far back of the first float as the workability of the concrete will permit. In the event the strike off is performed with a finishing machine, longitudinal floating of the concrete shall be performed by means of a hand-operated float board or a finishing machine equipped with a longitudinal wooden float. The longitudinal wooden float on the finishing machine shall be a length of not less then 8 feet nor more than 12 feet. When both strike off and longitudinal floating are performed by finishing machines, one machine, with operator, shall be used for strike off and a second machine, with a second operator, shall be used for longitudinal floating. Longitudinal floating may be performed with the same finishing machine that is used for strike off provided that the length of deck unit being placed is not more than 30 feet and the strike off operation is completed for said deck unit before the condition of the concrete requires that longitudinal floating be started. Finishing machines used for strike off having a wheel base 6 feet or less shall be followed by two separate hand-operated float boards for longitudinal floating. Hand-operated float boards shall be from 12 feet to 16 feet long, ribbed and trussed as necessary to provide a rigid float and shall be equipped with adjustable handles at each end. The float shall be wood, not less than one

inch thick and from 4 inches to 8 inches wide. Adjusting screws spaced at not to exceed 24 inches on centers shall be provided between the float and the rib. The float board shall be maintained free of twist and true at all times. Longitudinal floats, either hand-operated or machine-operated, shall be used with the long axis of the float parallel to the centerline of the bridge roadway. The float shall be operated with a combined longitudinal and transverse motion planing off the high areas and floating the material removed into the low areas. Each pass of the float shall lap the previous pass by one-half the length of the float. Floating shall be continued until a smooth riding surface is obtained. After floating and the concrete has set sufficiently to prevent goughing or tearing, the surface of the concrete shall be textured by brooming with a stiff bristled broom or by other suitable devices which will result in uniform scoring. The finished surface of the concrete shall be tested by means of a straightedge 12 feet long. The surface shall not vary more than 1/8 inch from the lower edge to the straightedge. All high areas in the hardened surface shall be removed by abrasive means. After grinding by abrasive means the surface of the concrete shall not be smooth or polished but shall have a coefficient of friction of not less than 0.30 as determined in accordance with Calif. Method No. 342. Ground areas shall be of uniform texture and shall present neat and approximately rectangular patterns.

10.3 Removal of Stains. The Contractor shall remove all grout drippings, efflorescence or other stains from outside faces of bridges above the finished ground line.

11. CURING AND PROTECTION shall conform to the applicable requirements of the section: CONCRETE (FOR BUILDING CONSTRUCTION).

12. FORMS AND FALSEWORK.

12.1 General. Forms shall be true to line and grade, mortartight and sufficiently rigid to prevent objectionable deformation under load. Where forms for continuous surfaces are placed in successive units, care shall be taken to fit the forms over the completed surface so as to obtain accurate alinement of the surface and to prevent leakage of mortar. Except as otherwise specified, responsibility for form adequacy shall rest with the Contractor; however, the type, shape, size, quality, and strength of all materials of which the forms are made shall be subject to specific approval. Bolts and rods used for internal ties shall be so arranged, that when the forms are removed, metal will be so constructed that they can be removed without damaging the concrete. All exposed joints, edges, and external corners shall be chamfered and dummy chamfers and false joints shall be used to provide a neat and uniform appearance. At the time the concrete is placed in the forms, the surfaces of the forms shall be free from encrustations of mortar, grout or other foreign material.

12.2.1 Lumber. All lumber, unless otherwise specified, shall be Douglas fir, selected as to grade, and conforming to the Standard Grading and Dressing Rules of the West Coast Lumber Inspection Bureau. Plywood, except as otherwise specified, shall conform to Product Standard PS 1, Exterior B-B (Concrete Form), Class I. Plywood form panels shall be furnished and placed in 48-inch widths and in uniform lengths of not less than 96 inches except where the dimensions of the member formed are less than the specified panel dimensions. Lumber for the uses listed shall not be lower than the following grades and materials.

Use	Grade and Material
Falsework joists and stringers, studs, and wales for formwork and all other falsework framing except as otherwise specified	Structural Joists and Planks, Small Timbers, Beams and Stringers
Falsework Posts	Structural Post and Timbers
Form Sheeting for non-showing faces of concrete	Shiplap (loose knots and knot holes will not be permitted) or any grade of plywood
Form sheeting for slabs and walls, ordinary surface finish only	Concrete form grade plywood or select merchantable grade
Form sheeting for faces to receive class 1 surface finish	Plywood Sound 1 Side (Sound Side toward concrete)
Other Lumber	Such that allowable stresses are not exceeded and where used against concrete shall have no knot holes or loose knots

Forms for all surfaces, which will not be completely enclosed or hidden below the permanent surface of the ground, shall be made of plywood, surfaced lumber, or material which will provide a surface at least equally satisfactory.

12.2.2 Metalwork. Bolts shall be mild steel bolts with square or hexagonal heads. Threads shall be American Standards, Free Fit. Class 2. Nuts shall be hexagonal. Other metalwork for form and falsework construction shall be approved.

12.3 Special Drawings and Stress Diagrams. The Contractor shall submit for approval shop drawings showing the systems of forms which he intends to use. If trusses are used a stress diagram shall be submitted with the design. Drawings shall show the proposed camber for nailing strips. No form construction shall be accomplished until after final approval of the drawings. Supporting calculations shall be signed by a Professional Engineer registered by the State of Arizona.

12.4 Design of Falsework.

12.4.1 General. Falsework shall be designed to carry all the loads which may come upon it, including the full weight of the fresh concrete, a minimum live load of 50 p.s.f., plus the induced horizontal or inclined pressures and whatever earth loads may be placed upon it. Provisions shall be made for adequate walkways outside of deck areas along each side of, and for the full length of any deck pour for the operators of finished floats.

12.4.2 Deflection and Settlement. Deflection of joists and beams shall be compensated for by cambering the soffit forms. Settlement of forms due to take-up of the joints in the shoring shall be compensated for by raising the entire form 1/16 inch for each joint in the shoring. Falsework shall be cambered to care for the dead load deflection plus a 20-pound per square foot construction load plus a falsework settlement allowance.

12.4.3 Fastenings. All falsework shall be bolted. Spiked or nailed joints will be permitted only in secondary members, and then only when approved.

12.5 Construction of Timber Falsework. Workmanship shall be first-class quality throughout. Only competent bridge carpenters shall be employed for carpenter work and all framing shall be precise and exact. Columns and struts shall not be spliced except at structural joints. Ties may be spliced provided the tension value of the tie is not reduced. Joints and beams shall not be spliced. If a pile has been cutoff too short the pile need not be replaced, but a block may be used between the cap and pile when approved. In such cases, the block shall not be less than 4 inches thick and 24 inches long and shall be used as a corbal. The final fit of butt joints shall be made by a new cut after the members are assembled in place, or the fit may be made by filling the joint completely with plaster of paris or molding plaster. Open compression joints will not be permitted. If laminated beams are used they shall be so tied together as to make their various parts act as a unit. Ends of columns bearing on wedges shall be tied in both directions with girts. Where girts are used to reduce the unsupported length of columns, they shall be doubled. Longitudinal lines of girts shall be extended by means of blocks to the abutments. Wedges shall be of hardwood and be pitched not more than 2 inches in 12 inches. Wedges shall be used in pairs. Steel shims may be used subject to approval.

12.6 Construction of Forms.

12.6.1 General. The design and construction of forms shall be subject to approval. Lumber for forms may be reused provided that the nails and spikes are withdrawn and that the lumber is cleaned and made equal in quality to new lumber of the required grade. The material for forms shall be of such thickness and strength, and the construction and bracing of forms shall be of such nature as to be unyielding and mortartight. Forms and reinforcements for any parts of a bridge structure will be completely checked and shall be approved before the Contractor will be permitted to place concrete.

12.6.2 Studs, Wales, and Sheeting. Studs shall be no less than 2 x 4 inches and shall be sized to a uniform depth not less than 3-1/2 inches. Wales held by bolts shall be used to retain the studs. Sheeting shall conform to the grades and material specified. In addition to all other requirements the bending stresses in form sheeting for showing faces shall be such that the deflection will not exceed 1/360 of the span and the stress at the outer fiber of plywood form sheeting shall not exceed 1,875 psi. The outer plies of plywood sheeting shall be laid parallel to the span. Where form panels are attached directly to the studding of joists, the panels shall be not less than 5/8 inch thick and the studding and joists shall be spaced not more than 12 inches center to center for showing faces and not more than 18 inches center to center for nonshowing faces. Form panels less than 5/8 inch thick which otherwise conform to the requirements herein specified may be used with a continuous backing of 3/4 inch surfaced shiplap. Form panels shall be placed in an approved neat and symmetrical pattern. All joints shall be filled with an approved quick setting compound finished flush with the interior of the form. No struts or bracings shall extend into or through concrete.

12.6.3 Form Ties. Forms shall be held by bolts or rods and those portions of bolts and rods within 2 inches of showing surfaces shall be removable. No wire ties or napties shall be used. Non-removable sleeves around bolts and rods shall not be used.

12.7 Standards and Tolerances.

12.7.1 Quality and Bracing. The quality of form work shall be within the limits of tolerance specified herein. The forms shall be so braced that these limits will be maintained during and after the placing of concrete. Bracing shall bear against the wales and not against studs or sheeting.

12.7.2 Faces Against Fills. Form for faces which will be in contact with fill may be made of new, used, smooth or rough lumber.

12.7.3 Forms. Except as otherwise specified, forms for all surfaces shall be set exactly to the lines indicated on the drawings. Screed strips for the top surface of the concrete deck shall be set to the drawing elevations indicated plus indicated allowances for camber and settlement and shall be set parallel to the centerline of the bridge deck.

12.7.4 Class 1 Surface Finish Concrete. Sheeting shall be securely fastened to the studs or the backing in such a manner that working surfaces are made continuous and without warp or irregularity. Workmanship on the forms shall be equal in quality to first-class cabinet work. Holes, cracks and joints shall be filled flush with an acceptable

filler. Surfaces shall be as smooth as that obtainable by the use of a medium grade sandpaper. Corners shall be sharp, clean, and of the angle shown on the drawings. Lines and edges shall be paralled as indicated. Forms shall be correct for position within 1/8 inch and shall be paralled within 1/8 inch to a wire stretched on the true line. Panels shall be true to a plane within 1/8 inch from a straightedge. Lines and edges shall be straight within 1/8 inch in the total length of a panel. All lines shall be truly vertical, horizontal, inclined, or curved as shown.

12.8 Coating. Forms facing concrete surfaces shall be coated with a nonstaining mineral oil before concrete is placed unless the forms have been treated with a wood sealer conforming to Military Specification MIL-W-13518. Shellac shall not be used on forms. Forms and form lumber shall be oiled before being placed in position as far as practicable to avoid splashing oil on the reinforcing steel or concrete. Any oil splashed on reinforcing steel or any other surfaces requiring bond with concrete shall be completely removed.

12.9 Removal of Forms.

12.9.1 General. Forms shall not be removed without the approval of the Contracting Officer, and all removal shall be accomplished in a manner which will prevent injury to the concrete. When forms are removed under conditions of a wide differential of temperature between the concrete and the atmosphere, provision, satisfactory to the Contracting Officer, shall be made for maintaining a blanket of moist air adjacent to the concrete and thus gradually reducing the temperature differential between the concrete and the surrounding atmosphere. A temperature differential of less than 25 degrees F. will be required. Forms shall not be removed before the expiration of a minimum time indicated below, except as otherwise specifically authorized by the Contracting Officer.

Deck Slabs	21 days
Walls and Vertical Faces	3 days
Barrier Railings	3 hours

12.9.2 Contractor's Option. At the Contractor's option results from suitable cylinder tests may be used as evidence that concrete has attained sufficient strength to permit removal of supporting forms. Cylinders required for such tests shall be provided in the same manner and shall be in addition to those test specimens specified in the paragraph: QUALITY. In lieu of form removal time as specified above, if the Contractor elects to provide tests as specified, permission will be given to remove forms at such time that concrete for bridge decks has attained a strength of not less than 3,000 pounds per square inch; for sidewalks when the concrete has attained a strength of not less than 2,000 pounds per square inch. This strength shall be the average of three specimens. All testing shall be done at the Contractor's expense. On the basis of the bridge deck concrete having attained the 3,000 pounds per square inch strength, as specified above, the Contracting Officer will authorize the immediate placing of the sidewalk and barrier railing concrete. This time for placing sidewalks and barrier railings is in lieu of time specified in paragraph: PLACING.

13. FURNISHING AND PLACING STEEL REINFORCEMENT AND EMBEDDED ITEMS. Conform to the applicable requirements of the section: CONCRETE (FOR BUILDING CONSTRUCTION) except reinforcement shall be grade 40 reinforcement, shall be located exactly as shown on the drawings. Formed holes and miscellaneous metalwork shall conform the applicable requirements of the sections: CONCRETE (FOR BUILDING CONSTRUCTION) and MISCELLANEOUS METALWORK AND MATERIALS.

14. GRATINGS. Conform to the applicable requirements of the section: STORM-DRAINAGE SYSTEM.

15. PERVIOUS BACKFILL MATERIAL. Conform to the applicable requirements of the section: MISCELLANEOUS AGGREGATES.

16. GUARDRAIL.

16.1 Timber Post and Blocks. Timber post and blocks shall be nominal 8" x 8" rough pressure treated and unpainted. Holes shall be bored before treatment. Timber posts and blocks shall be of larch, Douglas fir, lodgepole pine or ponderosa pine. Timber posts and blocks shall be graded in accordance with the grading rules of the Western Wood Products Association July 1968, hereinafter referred to as WWPA. Larch and Douglas fir posts shall conform to the requirements of Section 80.11 of WWPA. Larch and Douglas fir blocks shall conform to the requirements of Section 80.12 of WWPA. Lodgepole pine and ponderosa pine posts shall conform to the requirements of Section 82.11 of WWPA. Lodgepole pine and ponderosa pine blocks shall conform to the requirements of Section 82.12 of WWPA. Posts and blocks of ponderosa or lodgepole pine may be either boxed heart, free of heart centers or a combination of both. In the upper 40 inches of the posts, knots which are sound, tight and intergrown will be permitted up to three inches; however, not more than one knot to 3 inches will be permitted in every 12 inches. In the lower 24 inches of the posts and in the blocks knots which are sound, tight and intergrown will be permitted up to 3.5 inches.

16.2 Preservatives, Preservative Treatment and Inspection. Timber posts and blocks shall be treated in accordance with the requirements of AASHTO M 133, American Wood Preservers' Association Standard C1 and American Wood Preservers' Association Standard C2, except for the following: Timber posts and blocks shall be air seasoned or kiln dried to a moisture content no greater than 25 percent, based on an oven-dry weight; Preservatives used shall be either creosote or pentachlorophenol; Inspection of timber posts and blocks shall conform to the requirements of American Wood Preservers' Association Standard M2.

16.3 Steel Beams. Steel beams for guard rail shall conform to the requirements of AASHTO M 180. The beam elements shall consist of steel sheet made from open hearth, basic-oxygen or electric furnace steel.

16.4 Metal Posts and End Anchors. Metal posts and end anchors for guardrail shall conform to the requirements specified on the plans.

16.5 Galvanizing. Steel beams shall be galvanized in accordance with the requirements of ASTM A 525. The weight of the coating (total for both sides) shall be the weight specified for Coating Class 2.50. Steel posts shall be galvanized in accordance with the requirements of AASHTO M 111. Steel fittings, hardware, etc., shall be galvanized in accordance with the requirements of ASTM A 153. The weight of the coating shall be as specified in ASTM A 153. The guardrail end shoe shall be galvanized after fabrication in accordance with ASTM Specification A123. All guardrail plate, fittings, hardware, etc. shall be galvanized.

* * * * *

SECTION 4H

GROUTING STONE PROTECTION

Index

1. Applicable Publications
2. Materials
3. Mixing
4. Placing
5. Finishing

1. APPLICABLE PUBLICATIONS. The following publications of the issues listed below, but referred to thereafter by basic designation only form a part of this specification to the extent indicated by the references thereto.

1.1 Federal Specifications (Fed. Spec.).

SS-C-1960/GEN	Cement and Pozzolan, General Requirements for
SS-C-1960/3	Cement, Portland

1.2 American Society for Testing and Materials (ASTM), Publications.

C33-74a	Concrete Aggregates

1.3 U.S. Department of the Army, Corps of Engineers, Handbook for Concrete and Cement.

CRD-C 300-72	Membrane-Forming Compounds for Curing Concrete

2. MATERIALS.

2.1 Aggregate shall conform to the requirements specified for fine aggregate of the section: CONCRETE.

2.2 Portland Cement shall conform to the requirements of Fed. Spec. SS-C-1960/3, Type I and/or Type II. The alkali content of the cement shall not exceed 0.6 percent.

2.3 Water shall be fresh, clean, and potable.

3. MIXING. Grout shall be composed of cement, sand, and water mixed in the proportions as directed. The estimated cement content requirement per cubic yard of grout is 7-1/2 sacks. The water content of the mix shall not exceed 8-1/2 gallons per sack of cement. In calculating total water content of the mix, the amount of moisture carried on the surfaces of aggregate particles shall be included. Slump of grout mix shall be between 9 and 10 inches for the first course and between 7 and 8 inches for the second course or where one course is placed. The grout shall be mixed in a concrete mixer in the manner specified for concrete, except that time of mixing shall be as long as is required to produce a satisfactory mixture, and the grout shall be used in the work within a period of 30 minutes after mixing. Retempering of grout will not be permitted. The consistency of the grout shall be such as to permit gravity flow into the interstices of the stones with the help of spading, rodding, and brooming. Grout batches in the same course shall be uniform in mix, size, and consistency.

4. PLACING. Prior to grouting, the stone shall be flushed with water to wash down the fines and to prevent absorption of water from grout. The stone shall be kept wet just ahead of the actual placing of grout. The grout shall be placed in one course in invert and in 2 courses in side slopes. Each course shall be placed full width or in successive lateral strips approximately 10 feet in width, as applicable, extending from toe of slope to top on side slopes. The grout shall be brought to the place of final deposit by approved means and discharged directly on the stones using a splash plate of metal or wood to prevent displacement of stone directly under the discharge. The flow of grout shall be directed with brooms or other approved baffles to cover the entire area and to assure that all crevices are filled. Sufficient barring shall be done to loosen tight pockets of stone and otherwise aid the penetration of grout. The first course shall fully penetrate the stone blanket. The second course shall be placed as soon as the first course has sufficiently stiffened so that it will not flow when additional grout is added. On side slopes, all brooming shall be uphill, and after the second course has stiffened the entire surface shall be rebroomed to eliminate runs in the top course and to fill voids caused by sloughing of the layers of grout. Finishing shall conform to the requirements of the paragraph: FINISHING. After completion of any strip or panel, no workmen or other load shall be permitted on the grouted surface for a period of 24 hours. The grouted surface shall be protected from injurious action of the sun; shall be protected from rain, flowing water, and mechanical injury; and shall be moist cured or membrane cured at the Contractor's option. Moist curing shall consist of covering the grout with a uniform thickness of 2 inches of sand which shall be kept continuously saturated for a period of 14 days. Membrane curing compound shall be a non-pigmented curing compound conforming to Corps of Engineers Serial No. CRD-C 300 except that the compound shall contain a fugitive dye. All concrete cured with non-pigmented curing compound shall be shaded from the direct rays of the sun for the first 7 days of the curing period. The curing compound shall be applied as soon as the free water disappears and shall be applied in a 2-coat continuous operation by approved power-spraying equipment at a rate of not to exceed 200 square feet per gallon for the combined coats. The second coat shall be applied to overlap the first coat in a direction approximately at right angles to the direction of the first application.

5. FINISHING. The final course of grout shall be placed and broomed in a manner to expose the upper third of stone. After curing, sandblasting shall be required to clean excess grout from the exposed stones.

* * * * *

SECTION 4J

CONCRETE

Index

1. Applicable Publications
2. General
3. Materials
4. Samples and Testing
5. Contractor Submittals
6. Storage
7. Formwork
8. Reinforcement
9. Classes of Concrete, and Usage
10. Proportioning of Concrete Mixes
11. Joints
12. Installation of Anchorage Items
13. Preparation for Placing
14. Placing Concrete
15. Compaction
16. Bonding
17. Slabs on Grade
18. Setting of Base Plates and Bearing Plates
19. Finishes of Concrete Other Than Floor and Roof Slabs
20. Concrete Floor and Roof Slab Finishes
21. Curing
22. Setting Beds
23. Precast Concrete Trim Items

1. APPLICABLE PUBLICATIONS. The following publications of the issues listed below, but referred to thereafter by basic designation only, form a part of this specification to the extent indicated by the references thereto.

1.1 Federal Specifications (Fed. Spec.).

SS-C-1960/GEN	Cement and Pozzolan, General Requirements for
SS-C-1960/3	Cement, Portland
SS-S-195B	Sealing Compound, Two Component, Elastomeric, Polymer Type, Cold Applied, Concrete Paving Joints
SS-S-1401B	Sealing Compound, Hot Applied, for Concrete and Asphalt Pavements
TT-C-800A & Am-1	Curring Compound, Concrete, for New and Existing Surfaces
CCC-C-467C	Cloth, Burlap, Jute (or Kenaf)

1.2 U.S. Army Corps of Engineers Handbook for Concrete and Cement.

CRD-C 13-66	Air-Entraining Admixtures for Concrete
CRD-C 300-72	Membrane-Forming Compounds for Curing Concrete
CRD-C 588-76	Expansive Grouts

1.3 U.S. Department of Commerce, National Bureau of Standards (NBS), Product Standards.

PS 1-74	Construction and Industrial Plywood
PS 17-69	Polyethylene Sheeting (Construction, Industrial, and Agricultural Applications)
PS 58-73	Basic Hardboard

1.4 American Concrete Institute (ACI), Standards.

ACI 315-74	Manual of Standard Practice for Detailing Reinforced Concrete Structures (6th Edition; 2d Prtg, Apr 75)
ACI 318-71	Building Code Requirements for Reinforced Concrete, with Commentary & 1975 Suppl.

1.5 American Society for Testing and Materials (ASTM), Publications.

A 185-73	Welded Steel Wire Fabric for Concrete Reinforcement
A 615-75	Deformed and Plain Billet-Steel Bars for Concrete Reinforcement
A 616-75	Rail-Steel Deformed and Plain Bars for Concrete Reinforcement
A 617-75	Axle-Steel Deformed and Plain Bars for Concrete Reinforcement
C 31-69(R 1975)	Making and Curing Concrete Test Specimens in the Field
C 33-74a	Concrete Aggregates
C 39-72	Compressive Strength of Cylindrical Concrete Specimens
C 42-68(R 1974)	Obtaining and Testing Drilled Cores and Sawed Beams of Concrete
C 94-74a	Ready-Mixed Concrete
C 143-74	Slump of Portland Cement Concrete
C 171-69(R 1975)	Sheet Materials for Curing Concrete
C 172-71	Sampling Fresh Concrete
C 173-75	Air Content of Freshly Mixed Concrete by the Volumetric Method
C 192-69	Making and Curing Concrete Test Specimens in the Laboratory
C 231-75	Air Content of Freshly Mixed Concrete by the Pressure Method
C 494-71	Chemical Admixtures for Concrete
D 98-76a	Calcium Chloride
D 1190-74	Concrete Joint Sealer, Hot-Poured Elastic Type
D 1751-73	Preformed Expansion Joint Fillers for Concrete Paving and Structural Construction (Non-extruding and Resilient Bituminous Types)
D 1752-67(R 1973)	Preformed Sponge Rubber and Cork Expansion Joint Fillers for Concrete Paving and Structural Construction

D 1850-74	Concrete Joint Sealer, Cold-Application Type
E 11-70	Wire-Cloth Sieves for Testing Purposes
E 96-66(R 1972)	Water Vapor Transmission of Materials in Sheet Form

2. GENERAL. Full cooperation shall be given other trades to install embedded items. Suitable templates or instructions will be provided for setting items not placed in the forms. Before placing concrete, embedded items shall have been inspected, and tests for concrete or other materials or for mechanical operations shall have been completed and approved.

3. MATERIALS shall conform to the requirements specified below.

3.1 Abrasive Aggregate shall consist of not less than 55 percent aluminum oxide or silicon-carbide abrasive ceramically bonded together to form a homogenous material sufficiently porous to provide a good bond with Portland cement paste or shall be crushed, factory-graded emery aggregate, cubical or polyhedral in form, consisting of not less than 45 percent aluminum oxide and not less than 25 percent ferric oxide. The aggregate shall not be affected by freezing, moisture, or cleaning compounds. The aggregate shall be well graded in size from particles retained on the No. 30 sieve to particles passing the No. 8 sieve designated by ASTM E 11.

3.2 Admixtures containing chloride ions, or other ions producing deleterious effect, shall not be used where concrete will be in contact with aluminum, zinc-coated items, where concrete is to be sulfate-resistant, or concrete will be prestressed.

3.2.1 Air-Entraining Admixture. CRD-C 13.

3.2.2 Other Admixture. Admixture other than air-entraining agent and accelerating agent shall conform to ASTM C 494 and shall be compatible with the mix at job temperatures. Other admixture may be used in establishing the design mix. Other admixture may be used on written approval when required by the concrete placing and finishing conditions; however, reduction of the cement content will not be permitted.

3.3 Aggregates Except for Lightweight Concrete. ASTM C 33. Coarse aggregate shall be well graded from fine to coarse within the prescribed limits. Except for slabs on grade the maximum nominal coarse aggregate size shall be not larger than 1/5 the narrowest dimension between the sides of the forms of the member for which the concrete is to be used nor larger than 3/4 the minimum clearing spacing between bars. For slabs on grade the aggregate shall be not larger than 1/4 the slab thickness.

3.4 Anchorage Items. Inserts for anchoring masonry and mechanical items to concrete shall be of standard manufacture and of types required to engage with the anchors to be provided and installed therein under other sections of these specifications, and shall be subject to approval.

3.4.1 Inserts for Shelf Angles and Bolt Hangers shall be of malleable iron or of cast or wrought steel. Inserts for shelf angles shall have an integral loop at the back, shall be slotted to receive a special-headed bolt, shall have provision for nonslip vertical adjustment of shelf angle, and unless otherwise indicated, shall be furnished complete with special-headed bolt not smaller than 5/8 inch in diameter and of the required length and fitted with hexagonal nut. Inserts for bolt hangers shall be either threaded or slotted as required by the type of hanger to be used. Threaded inserts shall have integral lugs to prevent turning.

3.5 Cement. Only one brand of any one type of cement shall be used for exposed concrete surfaces of any individual structure. In determining the approved mix, Portland cement may be used alone as the cementitious material.

3.5.1 Portland Cement. Fed. Spec. SS-C-1960/3, type I, IA, II, or IIA.

3.5.2 High-Early-Strength Portland Cement. Fed. Spec. SS-C-1960/3, type III.

3.6 Floor Hardener shall be a colorless aqueous solution containing not less than 2 pounds of zinc and/or magnesium fluosilicate per gallon or sodium silicate solution having a specific gravity of 16.7 degrees Baume, or an approved proprietary hardener of proven and satisfactory performance delivered ready for use in the manufacturer's original containers.

3.7 Concrete Patching Compound. Fed. Spec. SS-C-1302, class B, and that can be painted without evidence of bleeding, and that after final set will be unaffected by high humidity or moisture.

3.8 Curing Materials.

3.8.1 Impervious Sheet Materials. ASTM C 171, type optional, except that polyethylene film if used shall be white opaque.

3.8.2 Burlap. Fed. Spec. CCC-C-467.

3.8.3 Membrane-Forming Curing Compounds. CRD-C 300 or Fed. Spec. TT-C-800, pigmented or nonpigmented as required. Nonpigmented compounds shall contain a fugitive dye.

3.9 Expansion-Joint Filler Strips, Premolded. ASTM D 1751 or D 1752, or resin impregnated fiberboard conforming to the physical requirements of ASTM D 1752, and shall be 3/8 inch thick unless otherwise indicated.

3.10 Form Materials, Coatings, and Ties are specified in paragraph FORMWORK.

3.11 Joint Sealant. One of the following: ASTM D 1190, ASTM D 1850, Fed. Spec. SS-S-1401, or Fed. Spec. SS-S-195, except for hanger floors use Fed. Spec. SS-S-200, type M, or Fed. Spec. SS-S-1614.

3.12 Reinforcement.

3.12.1 Bars. Deformed, conforming to one of the following: ASTM A 615, grade (40).

3.12.2 Mesh Reinforcement. ASTM A 185, of mesh and wire sizes indicated in slabs on grade.

3.13 Tie Bars. Deformed steel bars conforming to ASTM A 615.

3.14 Vapor Barrier.

3.14.1 Asphalt-saturated waterproof reinforced kraft paper.

3.14.2 Polyethylene-coated asphalt-saturated reinforced kraft paper.

3.14.3 Two layers of 30-pound asphalt-saturated felt solid-mopped with hot bitumen.

3.14.4 Polyethylene sheeting conforming to Product Standard PS 17, not less than 6-mil nominal thickness.

3.14.5 Other similar material having a vapor permeance rating not exceeding 0.5 perm as determined under ASTM E 96, Procedure E.

3.15 Water shall be potable.

4. SAMPLES AND TESTING.

4.1 General. Testing except as otherwise specified herein shall be performed by an approved testing agency and at no additional cost to the Government.

4.2 Cement will be accepted on the basis of the manufacturer's certification of compliance, accompanied by mill test reports, that cement meets the physical and chemical requirements of the specification under which furnished. Certificates of compliance and mill test reports shall be submitted in accordance with SPECIAL PROVISIONS, for each mill lot of cement furnished from different mills in mixed shipment and for each separate shipment from the same mill, prior to using the cement in the work.

4.3 Aggregates shall be tested as prescribed in ASTM C 33.

4.4 Reinforcement. Mill certificates of tests shall accompany deliveries of bar steel reinforcement.

4.5 Concrete.

4.5.1 Strength Tests During the Work. The Contractor shall provide for test purposes three sets of test specimens taken under the supervision of the Contracting Officer, from each 150 cubic yards or fraction thereof of each class of concrete placed. At least one set of test specimens shall be provided for each class of concrete placed in each 8-hour shift. Each set shall consist of 2 test specimens, and shall be made from a separate batch. Samples shall be secured in conformance with ASTM C 172. Test specimens shall be made, cured, and packed for shipment in accordance with ASTM C 31. Specimens shall be cured under laboratory conditions except that the Contracting Officer may require curing under field conditions when he considers that there is a possibility of the air temperature's falling below 40 degrees F. Specimens will be tested by and at the expense of the Government. Cylinders will be tested in accordance with ASTM C 39. Beams will be tested in accordance with ASTM C 78. Each test result shall be the average of the strengths of the 2 test specimens of a set except that if one specimen in a set of 2 shows evidence, other than low strength, of improper sampling, molding, handling, or curing, the remaining specimen shall be considered the test result. Test specimens will be evaluated separately, by the Contracting Officer, for meeting strength level requirements for each class and type of concrete indicated and specified in conformance with chapter CONCRETE QUALITY of ACI 318. The standard age of test shall be 28 days, but 7-day tests may be used, with the permission of the Contracting Officer, provided that the relation between the 7-day and 28-day strengths of the concrete is established by tests for the materials and proportions used. When laboratory-cured

specimens fail to conform to the requirements for strength, the Contracting Officer shall have the right to order a change in the proportions or in the water content of the concrete, or both, for the remaining portions of the work at no additional cost to the Government. If the average strength of the specimens cured under actual field conditions falls below the minimum allowable strength, the Contracting Officer may require changes in the conditions of curing temperature and moisture so as to secure the required strength.

4.5.2 Tests of Hardened Concrete in, or Removed from, the Structure. When the results of the strength tests of the control specimens indicate the concrete as placed does not meet specification requirements or where there is other evidence that the quality of the concrete is below specification requirements, core-boring tests shall be made in conformance with ASTM C 42. Core specimens will be tested by the Government. If the results of core-boring tests indicate that the concrete as placed conforms to the drawings and specifications, the cost of such tests will be borne by the Government. If the results of core-boring tests indicate that the concrete as placed does not conform to the drawings and specifications, the cost of such tests shall be borne by the Contractor. The deficiency shall be corrected; or, if the Contractor elects, he may submit a proposal, for approval, that a load test be made. If the proposal is approved, the load test shall be made by the Contractor and the test results evaluated by the Contracting Officer in conformance with chapter 20 of ACI 318. The costs of the load tests shall be borne by the Contractor. If any concrete shows evidence of failure during the load test, or fails the load test as evaluated, the deficiency shall be corrected. Any deficiency shall be corrected in a manner approved by the Contracting Officer and at no additional cost to the Government.

4.6 Membrane-Forming Curing Compounds shall be tested for conformance to the referenced specification under which furnished.

4.7 Admixtures. Admixture that has been in storage at the project site for longer than 6 months or that has been subjected to freezing shall not be used until proved by retest to be satisfactory.

4.7.1 Air-Entraining Admixture proposed for use shall be selected well in advance of concrete placing. Satisfactory facilities shall be provided for the ready procurement of test samples.

4.7.2 Coloring Agent. The Contractor shall notify the Contracting Officer of the source from which the coloring agent will be obtained at least 60 days in advance of the time when concrete placing is expected to begin.

4.7.3 Other Admixture shall be tested for conformance to the referenced specification under which furnished.

5. CONTRACTOR SUBMITTALS.

5.1 Samples of the following shall be furnished and approved before delivery to the jobsite of materials represented by the samples.

Abrasive aggregate Vapor barrier

5.2 Shop Drawings. Before starting construction operations under this section, detail and placing drawings shall be submitted and approved for the following in conformance with SPECIAL PROVISIONS.

5.2.1 Reinforcement Details showing sizes and grades of steel, bending and splicing details, splice locations, placement drawings for flat plate and slab steels, concrete protection for steel reinforcement, and accessories, including positioning of reinforcement and how final position of reinforcement in slab on grade will be obtained.

5.3 Materials Certification. The following materials shall be certified for compliance with all specification requirements.

Joint sealant

5.4 Other Submittals shall be made as required under the following referenced paragraphs.

SAMPLES AND TESTING

PROPORTIONING OF STRUCTURAL CONCRETE MIXES

PLACING CONCRETE

SETTING OF BASE PLATES AND BEARING PLATES

5.5 Test Reports and Certificates. Certified copies of test reports, or other satisfactory evidence where so specified, and certificates, shall be furnished in conformance with SPECIAL PROVISIONS and approval received before delivering certified or tested materials to the project site.

6. STORAGE accommodations for concrete materials shall be subject to approval and shall afford easy access for inspection and identification of each shipment in accordance with test reports.

6.1 Cement, immediately upon receipt at site of work, shall be stored separately in a dry, weathertight, properly ventilated structure, with adequate provision for prevention of absorption of moisture.

6.2 Aggregates shall be stored to assure good drainage, to preclude inclusion of foreign matter, and to preserve the gradation.

7. FORMWORK. Forms shall be designed, constructed, and maintained so as to insure that after removal of forms the finished concrete members will have true surfaces free of offset, waviness or bulges and will conform accurately to the indicated shapes, dimensions, lines, elevations, and positions. Form surfaces that will be in contact with concrete shall be thoroughly cleaned before each use.

7.1 Design. Studs and wales shall be spaced to prevent deflection of form material. Forms and joints shall be sufficiently tight to prevent leakage of grout and cement paste during placing of concrete. Joints in forms shall be arranged vertically and horizontally to conform to the pattern of the design. Juncture of formwork panels shall occur at architectural lines, vertical control joints, including alinement with masonry control joints, and construction joints. Forms placed on successive units for continuous surfaces shall be fitted to accurate alinement to assure smooth completed surfaces free from irregularities. Temporary openings shall be arranged in wall and column forms and where otherwise required to facilitate cleaning and inspection. Forms shall be readily removable without impact, shock, or damage to the concrete.

7.2 Concrete Surfaces to be Exposed or Painted. Form surfaces that will be in contact with concrete shall be of material that is nonreactive with concrete and that will produce concrete surfaces equivalent in smoothness and appearance to that produced by new 4- by 8-foot plywood panels conforming to Product Standard psi, exterior type, grade B-B, concrete form. Smaller size panels shall be used only where required by openings or the above architectural lines or joints, with each area less than 4 feet wide formed with a single panel accurately cut to the required dimensions. Cut surfaces shall be smooth and treated with form coating. Panel joints that will be in contact with concrete shall be smooth and free of offset. Form materials with defects that will impair the texture and appearance of finish surfaces shall not be used. Form lining, if used, shall be installed over solid backing. Column forms shall be made with a minimum number of joints.

7.3 Concrete Surfaces to be Unexposed. Forms surfaces that will be in contact with concrete shall be sound, tight lumber or other material producing equivalent finish.

7.4 Sample Concrete Panels. Before constructing structural formwork, sample concrete panel for exposed or painted concrete shall be constructed and approved for smooth finish specified in paragraph FINISHES OF CONCRETE OTHER THAN FLOOR AND ROOF SLABS. The panel shall be not less than 6 feet long by 4 feet high. Concrete shall be of the approved design mix. Forms shall include a typical joint between form panels. Sample panels shall show tie-hole patching and smooth finish. Sample panels shall be constructed at an approved location, not as part of the structure, and shall be protected from construction operations, weather, and other damage until acceptance of the completed concrete work. The approved sample panel shall be representative of the smooth concrete finish required in the work.

7.5 Form Ties shall be factory-fabricated, removable or snap-off metal ties of design that will not allow form deflection and will not spall concrete upon removal. Solid backing shall be provided for each tie. Ties shall be fitted with devices that will leave holes in the concrete surface not less than 3/8 inch nor more than one inch in diameter and of depth of not less than one inch. The portion of the tie remaining in the concrete after removal of the exterior parts shall not project beyond the surface of the concrete and shall be at least one inch back from any surface of the concrete that will be exposed, painted, dampproofed, waterproofed, or receive direct applications of plaster. Bolts and rods that are to be completely withdrawn shall be coated with a nonstaining bond breaker.

7.6 Chamfering. External corners of columns, girders, beams, foundation walls projecting beyond overlying masonry, and other external corners that will be exposed shall be chamfered, beveled, or rounded, by moldings placed in the forms unless the drawings specifically state that chamfering is to be omitted.

7.7 Coating. Forms for exposed or painted surfaces shall be coated with form oil or form-release agent before reinforcement is placed. The coating shall be a commercial formulation of satisfactory and proven performance that will not bond with, stain, or adversely affect concrete surfaces, and will not impair subsequent treatment of concrete surfaces depending upon bond or adhesion nor impede the wetting of surfaces to be cured with water or curing compounds. The coating shall be used as recommended in the manufacturer's printer or written instructions. Forms for unexposed surfaces, other than retained-in-place metal forms may be wet with water in lieu of coating immediately before placing of concrete, except that in cold weather with probable freezing temperatures coating shall be mandatory. Surplus coating on form surfaces and coating on reinforcing steel and construction joints shall be removed before placing concrete.

7.8 Removal of Forms shall be in a manner to insure complete safety of the structure after the following conditions have been met. Where the structure as whole is supported on shores, forms for beam and girder sides, columns, and similar vertical structural members may be removed after 24 hours, provided concrete is sufficiently hard not to be injured thereby. Supporting forms or shoring shall not be removed until structural members have acquired sufficient strength to support safely their own weight and any construction and/or storage load to which

they may be subjected, but in no case shall they be removed in less than 7 days, nor shall forms used for curing be removed before expiration of curing period except as specified in paragraph CURING. Care shall be taken to avoid spalling the concrete surface or damaging concrete edges. Wood forms shall be completely removed.

7.8.1 Control Tests. Results of suitable control tests will be used as evidence that concrete has attained sufficient strength to permit removal of supporting forms. Cylinders required for control tests shall be provided in addition to those otherwise required by this specification. Test specimens shall be removed from molds at end of 24 hours and stored in the structure as near points of sampling as possible, shall receive insofar as practicable the same protection from the elements during curing as is given those portions of the structure which they represent, and shall not be removed from the structure for transmittal to the laboratory prior to expiration of 3/4 of the proposed period before removal of forms. Cylinders will be tested by and at the expense of the Government. Supporting forms or shoring shall not be removed until control-test specimens have attained strength of at least 1,500 pounds per square inch for columns and 2,000 pounds per square inch for all other work. The newly unsupported portions of the structure shall not be subjected to heavy construction or material loading.

7.8.2 Tie-Rods to be entirely removed from the wall shall be loosened 24 hours after concrete is placed, and form ties, except for a sufficient number to hold forms in place, may be removed at that time. Ties wholly withdrawn from wall shall be pulled toward the face that will be concealed from view in the permanent work.

7.8.3 Filling of Tie-Rod or Bolt Holes is specified in paragraph FINISHES OF CONCRETE OTHER THAN FLOOR AND ROOF SLABS.

8. REINFORCEMENT shall be fabricated to shapes and dimensions shown and shall be placed where indicated. Reinforcement shall be free of loose or flaky rust and mill scale, or coating, including ice, and any other substance that would reduce or destroy the bond. Reinforcing steel reduced in section shall not be used. After any substantial delay in the work previously placed reinforcing steel left for future bonding shall be inspected and cleaned. Reinforcing steel shall not be bent or straightened in a manner injurious to the steel or concrete. Bars with kinks or bends not shown on drawings shall not be placed. The use of heat to bend or straighten reinforcing steel will be permitted only if the entire operation is approved. Bars shall be moved as necessary to avoid interference with other reinforcing steel, conduits, or embedded items. If bars are moved more than one bar diameter, the resulting arrangement of bars including additional bars necessary to meet structural requirements shall be approved before concrete is placed. In slabs, beams, and girders, reinforcing steel shall not be spliced at points of maximum stress unless otherwise indicated. Laps or splices shall be made in conformance with ACI 318. Exposed reinforcement bars, inserts, and plates intended for bonding with future extensions shall be protected from corrosion.

8.1 Reinforcement Detailing and Placement, Including Concrete Protection for Steel Reinforcement, unless otherwise indicated, shall conform to ACI 318 and 315.

8.1.1 Wire-Mesh Reinforcement shall be continuous between crack-control joints in slabs on grade, and shall be continuous between expansion joints in other slabs. Laps shall be at least one full mesh plus 2 inches, staggered to avoid continuous lap in either direction, and securely wired or clipped with standard clips.

8.1.2 Dowels in slabs on grade shall be installed at right angles to construction joints and expansion joints. Dowels shall be accurately alined parallel to the finished surface, and shall be rigidly held in place and supported during placing of the concrete. One end of dowels shall be oiled or greased.

8.1.3 Tie Bars in slabs on grade shall be placed at right angles to construction joints. Tie bars shall be accurately alined parallel to the finished surface, and shall be rigidly held in place and supported during placing of the concrete.

8.2 Supports shall be provided in conformance with ACI 315 and ACI 318 unless otherwise indicated or specified. Reinforcement over pile caps shall be supported on precast concrete. Wire ties, when used, shall be 16-gage black annealed wire and shall have ends pointing away from the form.

8.2.1 For Slabs on Grade. Reinforcement shall be supported on precast concrete units spaced at intervals required by size of reinforcement used, to keep reinforcement the minimum height specified or indicated above the underside of slab or footing.

8.2.2 For Slabs Other Than on Grade. Supports for which any portion will be less than one inch from concrete surfaces that will be exposed to view or painted shall be plastic-coated steel conforming to ACI 315, stainless steel, precast concrete units, or plastic. Precast concrete units shall be wedge-shaped, not larger than 3-1/2 by 3-1/2 inches, and of thickness equal to that indicated for concrete protection of reinforcement. The precast units shall have cast-in galvanized tie wire hooked at top for anchorage and shall blend with concrete surfaces after finishing is completed. Concrete shall be of the same quality as for slabs, but with coarse aggregate reduced. Plastic supports shall be of strength and spaced so as not to deform under weight to which subjected.

9. CLASSES OF CONCRETE, AND USAGE.

9.1 Strength Requirements. Concrete of the various classes indicated and as required under other sections shall be proportioned and mixed for the following strengths.

Class	Specified compressive strength 28 days, psi	Class	Specified flexural strength 28 days, psi
A	3,000		
B	2,500		
C	2,000		

Concrete made with high-early-strength cement shall have a 7-day strength equal to the specified 28-day strength for concrete of the class specified made with type I or II Portland cement.

9.2 Usage. Concrete of the various classes shall be used as follows.

9.2.1 Class A Concrete. For all reinforced work not otherwise indicated.

9.2.2 Class B Concrete. For reinforced work in slabs-on-grade and footings.

9.2.3 Class C Concrete. For all concrete not reinforced except as otherwise indicated.

10. PROPORTIONING OF CONCRETE MIXES. Trial design batches and testing to meet requirements of the classes of concrete specified shall be the responsibility of the Contractor. The design mix shall contain aggregates representative of those proposed for use in the work and shall be of consistencies specified hereinafter in paragraph Slump. Tests for slump, unit weight, and air content shall be performed in the field under the supervision of the Contracting Officer.

10.1 Entrained-Air Content. Air entrainment shall be produced by either adding an air-entraining agent at the mixer or by use of mill-produced air-entraining cement. When necessary to increase the air content to within the specified range, additional air-entraining admixture compatible with that already in the mixture shall be added at the mixer. Air content shall be based on measurements made in concrete mixtures at point of discharge at the jobsite.

10.1.1 For Exterior Concrete, air content by volume of concrete shall be maintained at 5 to 7 percent as determined in conformance with ASTM C 231. Air-engrained concrete may be used in portions of the work other than where specified.

10.2 Concrete. Mixes shall be proportioned by weight except that water and admixture may be by volume or by weight. Specimens shall be made and cured in conformance with ASTM C 192 and tested in conformance with ASTM C 39 or C 78, as applicable. Curves representing relation between the water-cement ration and the average 28-day compressive or flexural strength, or earlier strength at which the concrete is to receive its full working load, shall be established for a range of values including the compressive and flexural strengths indicated or specified. Curves shall be established by at least 3 points, each point representing average values from at least 3 test specimens. The maximum allowable water-cement ratio shall be that shown by these curves to produce an average compressive strength or an average flexural strength 15 percent greater than indicated or specified.

10.3 Established Design-Mix Proportions. Prior to commencing operations, the Contractor shall furnish a statement giving the mix proportions of all ingredients, maximum nominal coarse-aggregate size, (and unit weights per cubic foot of lightweight structural concrete, freshly mixed and 28-day air-dry,) that will be used in the manufacture of each class of concrete proposed for use. Proportions shall indicate weight of dry cement and weights of aggregates in saturated surface-dry condition except dry weights shall be indicated for lightweight aggregates. The statement shall be accompanied by test reports and all test results from an independent commercial testing laboratory, attesting that the proportions thus selected will produce concrete of the qualities indicated. No substitutions shall be made in the materials used in the work without additional tests to show that the quality of the concrete is satisfactory.

10.4 Corrective Additions to remedy deficiencies in aggregate gradations shall be used only on written approval.

10.5 Slump shall be determined in conformance with ASTM C 143, and shall be within the following limits, provided the required strength is obtained:

Structural element	Slump for vibrated concrete, inches	
	Minimum	Maximum
Walls, columns, and grade beams, 10-inch maximum thickness	3	4
Other building construction	2	3

11. JOINTS. No reinforcement, corner protection angles, or other fixed metal items shall be run continuous through joints containing expansion-joint filler, through crack-control joints in slabs on grade, or through joints between slabs on grade and vertical surfaces. Reinforcement shall be interrupted, 2 inches clear each side, at crack-control joints specified in paragraph SLABS ON GRADE.

11.1 Perimeter Felt Joints. Joints between interior slabs on grade and vertical surfaces, unless otherwise shown, shall be of 30-pound asphalt-saturated felt, extending full slab depth. The perimeters of slabs at the joints shall be free of fins, rough edges, spalling, or other unsightly appearance.

11.2 Premolded Expansion Joint Filler.

11.2.1 Joint with Joint Sealant. At expansion joints in concrete slabs to be exposed, expansion joints where filler is completely covered by base and shoe mold, and at other joints indicated to receive joint sealant, premolded expansion-joint filler strips shall be installed at the proper level below the finished floor with a slightly tapered, dressed-and-oiled wood strip temporarily secured to the top thereof to form a groove not less than 3/4 inch deep. The wood strip shall be removed after concrete has set. The groove, when surface dry, shall be cleaned of foreign matter, loose particles, and concrete protrusions, then filled approximately flush with joint sealant so as to be slightly concave after drying.

11.2.2 Joint With Compound. When slabs on grade are to receive resilient flooring and premolded expansion-joint filler is required between the slabs or between the slabs and vertical surfaces, the filler strip shall be installed at the proper level below the finished floor with a slightly tapered, dressed-and-oiled wood strip temporarily secured to the top thereof to form a groove not less than 1/4 inch deep. The wood strip shall be removed after the concrete has set.

11.2.3 Finish at Joints. Edges of exposed concrete slabs along expansion joints shall be neatly finished with a slightly rounded edging tool.

11.3 Construction Joints Other Than Slabs on Grade. The unit of operation shall not exceed 60 feet for foundation walls and other foundation work except footings. Concrete shall be placed continuously so that the unit will be monolithic in construction. Fresh concrete may be placed against adjoining units provided the set concrete is sufficiently hard not to be injured thereby. Joints not indicated shall be made and located to least impair strength and appearance of the structure. Construction joints, if required, shall be located near the midpoint of spans for slabs, beams, or girders unless a beam intersects a girder at the center, in which case the joints in the girder shall be offset a distance equal to twice the width of the beam with provision for transfer of shear and other forces through the construction joint by use of reinforcement as approved. Joints in columns or piers shall be made at the under side of the deepest beam or girder framing thereto. Concrete for columns, walls, or piers shall be in place at least 2 hours before concreting beams, girders, or slabs thereon. Beams, girders, brackets, column capitas, and haunches shall be considered as part of the floor system and shall be placed monolithically therewith. No horizontal joints shall be made in footings. Vertical construction joints in wall footings shall be reduced to a minimum. Placement of concrete shall be at such rate that surfaces of concrete not carried to joint levels will not have attained initial set before additional concrete is placed thereon. Girders, beams, and slabs shall be placed in one operation. In walls having door and window openings, individual lifts shall terminate at top and bottom of opening. Other lifts shall terminate at such levels as are indicated or as to conform to structural requirements or architectural details, or both, as directed. Where horizontal construction joints are required, a strip of one inch squared-edged lumber, beveled to facilitate removal, and oiled, shall be tacked to the inside of the forms at the construction joint. Concrete shall be placed to a point one inch above the under side of the strip. The strip shall be removed one hour after the concrete has been placed, any irregularities in the joint line leveled off with a wood float, and all laitance removed. Prior to placing additional concrete, horizontal construction joints shall be prepared as specified in paragaph BONDING.

11.4 Vertical Control, Weakened-Plane, Joints shown as continuations of control joints in masonry construction and shown at other locations shall be left ready for sealing.

11.5 Crack-Control Joints in slabs on grade are specified in paragraph SLABS ON GRADE.

12. INSTALLATION OF ANCHORAGE ITEMS.

12.1 Inserts for Hangers for Piping and Mechanical Fixtures and their installation shall be as specified under sections: PLUMBING, and HEATING.

13. PREPARATION FOR PLACING. Water shall be removed from excavation before placing concrete. Any flow of water shall be diverted through proper side drains and shall be removed without washing over freshly deposited concrete. Hardened concrete, debris, and foreign materials shall be removed from interior of forms and from inner surfaces of mixing and conveying equipment. Reinforcement shall be secured in position, and shall be inspected, and approved before placing concrete. Runways shall be provided for wheeled concrete-handling equipment; such equipment shall not be wheeled over reinforcement nor shall runways be supported on reinforcement.

14. PLACING CONCRETE. Concrete shall be handled from mixer to transport vehicle to place of final deposit in a continuous manner, as rapidly as practicable, and without segregation or loss of ingredient until the approved unit of operation is completed. Placing will not be premitted when the sun, heat, wind, or limitations of facilities furnished by the Contractor prevent proper finishing and curing of the conrete. Concrete shall be placed in the forms, as close as possible in final position, in uniform approximately horizontal layers not over 12 inches deep except that class P concrete shall be placed in a single layer. Forms splashed with concrete and reinforcement splashed with concrete or form coating shall be cleaned in advance of placing subsequent lifts. Concrete shall not be allowed to drop freely more than 5 feet in unexposed work nor more than 3 feet in exposed work; where greater drops are required, a tremie or other approved means shall be employed. The discharge of the tremies shall be controlled so that the concrete may be effectively compacted into horizontal layers not more than 12 inches thick, and the spacing of the tremies shall be such that segregation does not occur. Concrete to receive other construction shall be screeded to the proper level to avoid excessive shimming or grouting. Conduits and pipes shall not be embedded in concrete unless specifically indicated.

14.1 Time Interval Between Mixing and Placing. Concrete mixed in stationary mixers and transported by nonagitating equipment shall be placed in the forms within 45 minutes from the time ingredients are charged into the mixing drum. Concrete that is truck mixed or transported in truck mixers or truck agitators shall be delivered to the site of the work and discharge completed in the forms within the time specified in paragraph 9.7 of ASTM C 94, except that when the concrete temperature exceeds 85 degrees F., the time shall be reduced to 45 minutes. Transit-mixed concrete that is completely mixed at the site of concrete placement or batched cement and aggregates transported to mixers shall be placed in the forms within 1-1/2 hours after cement has been added. Concrete shall be placed in the forms within 15 minutes after discharge from the mixer at the jobsite.

14.2 Cold-Weather Requirements. Concrete shall not be placed when without special protection the concrete is likely to be subjected to freezing temperature before the expiration of the specified curing period. If necessary to place concrete under conditions of low temperature, placement shall be approved by the Contracting Officer. The temperature of the concrete when placed shall be not less than 50 degrees F. Heating of the mixing water and/or aggregates will be required as necessary to maintain the minimum concrete temperature of 50 degrees F., and all methods and equipment for heating shall be subject to approval. Materials entering the mixer shall be free from ice, snow, frost, and frozen lumps. Surfaces that will be in contact with concrete shall be free of frost, ice, or snow. Suitable covering and other means that will not stain concrete, as approved, shall be provided for maintaining the concrete at the temperatures and period specified in paragraph CURING. Salt, chemicals, or other materials shall not be mixed with the concrete to prevent freezing, except that calcium chloride may be used as an accelerating agent, after written approval, when the weather is cold enough to require protection of the concrete from freezing. The amount of calcium chloride shall not exceed 2 percent by weight of the cement being used. The use of calcium chloride in concrete shall not, in any way, relieve the Contractor of reponsibility for compliance with the requirements of these specifications governing protection and curing of the concrete. Any concrete damaged by inadequate protection or procedure shall be removed and replaced at no additional cost to the Government.

14.3 Placing During Warm Weather. Concrete shall be placed at the coolest temperature practicable, and in no case shall the temperature of the concrete when deposited in the forms exceed 90 degrees F. The aggregates and/or mixing water shall be cooled as necessary to maintain the concrete temperature at not more than the specified maximum. Forms and underlying material that will not be covered by vapor barrier or similar material shall be sprinkled with water immediately before placing the concrete.

14.4 Earth-Foundation Placement. Concrete footings, exterior slabs, and exterior foundations receiving equipment or machinery shall be placed upon undisturbed surfaces conforming to section: EXCAVATION, FILLING, AND BACKFILLING FOR BUILDINGS. The surfaces shall be clean, free from frost, ice, mud, and water. Waterproof paper, polyethylene sheeting of nominal 4-mil minimum thickness, or polyethylene-coated burlap shall be laid over dry or pervious surfaces receiving concrete. Such material shall be of a type specified for curing concrete except that the polyethylene film may be other than white. The concrete footings and exterior slabs and foundations may be placed directly on impervious surfaces that are thoroughly moistened but not muddy at the time concrete is placed.

14.5 Conveying Concrete by Chute, Conveyor, or Pump. Concrete may be conveyed by chute, conveyor, or pump if approved in writing. In requesting approval, the Contractor shall submit his entire plan of operation from time of discharge of concrete from the mixer to final placement in the forms, and the steps to be taken to prevent the formation of cold joints in case the transporting of concrete by chute, conveyor, or pump is disrupted. Aluminum chutes and pipelines shall not be used for placing concrete. Conveyors and pumps shall be capable of expeditiously placing concrete at the rate most advantageous to good workmanship. Approvals will not be given for chutes or conveyors requiring changes in the concrete materials or design mix for efficient operation.

14.5.1 Chutes and Conveyors. Chutes shall be of steel or steel-lined wood, rounded in cross section, rigid in construction, and protected from overflow. Conveyors shall be designed and operated, and chute sections shall be set, to assure a uniform flow of concrete from mixer to final place of deposit without segregation of ingredients, loss of mortar, or change in slump. The discharge portion of each chute or conveyor shall be provided with a device to prevent segregation. The chute and conveyor shall be thoroughly cleaned before and after each run. Waste material and flushing water shall be discharged outside the forms.

14.5.2 Pumps shall be operated and maintained so that a continuous stream of concrete is delivered into the forms without air pockets, segregation of change in slump. When pumping is completed, concrete to be used remaining in the pipeline shall be ejected without contamination of concrete or segregation of ingredients. After each operation, equipment shall be thoroughly cleaned, and the flushing water shall be wasted outside the forms.

14.6 Placing Concrete Through Reinforcement. Where congestion of the steel or other conditions will make placing or compaction of concrete difficult, a layer of mortar shall be first deposited in the forms to a depth of approximately one inch. Mortar proportions shall be the same as the concrete minus the coarse aggregate.

15. COMPACTION. Immediately after placing, each layer of concrete, other than lightweight insulating concrete and lightweight concrete for fill, shall be compacted by internal concrete vibrators supplemented by hand-spading, rodding and tamping. Tapping or other external vibration of forms will not be permitted. Vibrators shall not be used to transport concrete inside forms. Internal vibrators submerged in concrete shall maintain a speed of not less than 7,000 impulses per minute. The vibrating equipment shall at all times be adequate in number of units and power to properly consolidate all concrete. Spare units shall be on hand as necessary to insure such adequacy. Duration of vibration shall be limited to time necessary to produce satisfactory consolidation without causing objectionable segregation. The vibrator shall not be inserted into lower courses that have begun to set. Vibrators shall be applied at uniformly spaced points not farther apart than the visible effectiveness of the machine.

16. BONDING. Before depositing new concrete on or against concrete that has set, the surfaces of the set concrete shall be thoroughly cleaned so as to expose the coarse aggregate and be free of laitance, coatings, foreign matter, and loose particles. Forms shall be retightened. The cleaned surfaces may be moist but shall be without free water when concrete is placed.

17. SLABS ON GRADE. Capillary water barrier or subgrade shall conform to section: EXCAVATION, FILLING, AND BACKFILLING FOR BUILDINGS.

17.1 Vapor Barrier. Immediately prior to placing concrete, the subgrade under slabs within the building shall be covered with a vapor barrier except where membrane waterproofing of slabs is indicated. Punctures and tears shall be patched. Edges shall be lapped not less than 4 inches and end joints shall be lapped not less than 6 inches. Edges and lapped joints shall be sealed with a pressure-sensitive tape, not less than 2 inches wide, compatible with the membrane.

17.2 Concrete shall be compacted, screeded to grade, and prepared for the specified finish. Concrete shall be placed continuously so that each unit of operation will be monolithic in construction. Concrete shall be placed in alternate checkerboard pattern terminating at crack-control joints or may be placed in alternate paving lanes as limited by expansion and construction joints and with contraction joints to provide panels of size specified. Crack-control joints shall be expansion, contraction, or construction joints. Joints not shown shall be located at column centerlines and at intermediate intervals so that each panel shall be not more than 600 square feet in area. Panels shall be approximately square with dimension of one side not more than 25 feet. Forms shall remain in place for at least 12 hours after concrete placement. Diamond-shaped isolation joints shall be provided in slabs on grade at columns on separate footings for full slab depth and shall be constructed so that corners of isolation joints will meet at crack-control joints. Where columns bear on thickened slabs or thickened edges, floor slab construction, contraction or expansion joints shall be offset from thickened slabs or thickened edges.

17.3 Contraction Joints may be formed by the insertion of hard-pressed fiberboard strips inserted in the plastic concrete or may be cut with an approved concrete-sawing machine after the concrete has set. Unless otherwise indicated or directed, the joints shall be 1/8 inch wide and of depth equal to approximately 1/4 of the slab thickness or the maximum size of the coarse aggregate, whichever is greater.

17.3.1 Fiberboard Joints. Fiberboard strips shall be of the required dimensions and as long as practicable. After the first floating, the concrete shall be grooved with a tool at the desired joint locations to a depth approximately equal to the width of the strip. The strip shall be inserted in the groove, using a U-shaped device of sheet metal fitted over the top edge of the strip to maintain true alinement until the top edge of the strip is flush with the surface of the slab. When the concrete has set sufficiently to retain the strip, the sheet metal device shall be withdrawn. The slab shall be floated and finished as specifed, using an edging tool on each side of the inserted joint strip where slabs will be left exposed to view.

17.3.2 Sawed Joints. Contraction joints shall be cut to true alinement with concrete-sawing machines adequate in number and power and with sufficient replacement blades to complete the sawing at the required rate. Time of cutting shall be varied and shall be such as to prevent uncontrolled cracking of the slab. Joints shall be cut as soon as the concrete has hardened sufficiently to permit cutting the concrete without chipping, spalling, or tearing. Unless otherwise approved, joints shall be cut in the sequence of concrete placement. Sludge and cutting debris shall be removed.

17.4 Sealing. Concrete joints, where sawed or formed, shall be filled with joint sealant except where floor covering is required.

18. SETTING OF BASE PLATES AND BEARING PLATES. After being plumbed and properly positioned, column base plates, bearing plates, for beams and similar structural members, and machinery and equipment base plates shall be provided with full bearing with damp-pack bedding mortar except where expansive grout is indicated. The space between the top of concrete or masonry bearing surfaces and the bottom of the plate shall be approximately 1/24 of the width of the plate, but not less than 1/2 inch for plates less than 12 inches wide. Concrete surfaces shall be rough, clean, free of oil, grease, and laitance, and shall be damp. Metal surfaces shall be clean and free of oil, grease, and rust.

18.1 Damp-Pack Bedding Mortar shall consist of one part type I Portland cement and 2/1/2 parts of fine aggregate conforming to ASTM C 33, proportioned by weight, and not more than 4-1/2 gallons of water per bag of cement. The space between the top of the concrete or masonry bearing surface and the bottom of the plate shall be packed with the bedding mortar by tamping or ramming with a bar or rod until the voids are completely filled.

18.2 Expansive Grout shall conform to CRD-C 588, type M or type A. (Minimum compressive strength shall be 3000 psi at 28 days.) For clearance of 2 inches or more, the mix shall include by weight 1-1/2 parts of sound, clean uncrushed gravel 1/4- to 3/8-inch size, to one part Portland cement unless otherwise recommended by the material manufacturer. Water content shall be the minimum that will provide a flowable mixture and completely fill the space to be grouted without segregation, bleeding, or reduction of strength. Prior to placing grout, the Contractor shall furnish for approval (design mix proportions of all ingredients and certified copies of laboratory test results) (certificates signed by the material manufacturer and descriptive literature) indicating that the materials and mix, tested in conformance with CRD-C 589, will produce grout meeting specified requirements.

18.2.1 Mixing and Placing shall be in conformance with the material manufacturer's instructions and as specified therein. Ingredients shall be thoroughly dry-mixed before adding water. After adding water, the batch shall be mixed for 3 minutes. Batches shall be of size to allow continuous placement of freshly mixed grout. Grout not used within 30 minutes after mixing shall be discarded. Placing shall be quick and continuous. The space between the top of the concrete or masonry bearing surface shall be filled solid with the grout. Forms shall be of wood or other equally suitable material for retaining the grout and shall be removed after the grout has set. The placed grout shall be worked to eliminate voids; however, overworking and breakdown of the initial set shall be avoided. Grout shall not be retempered or subjected to vibration from any source. Where clearances are unusually small, placement shall be under pressure with a grout pump. A detailed plan shall be submitted for approval, showing equipment and procedures proposed for use. Temperature of the grout, and of surfaces receiving the grout, shall be maintained at 65 to 85 degrees F. until after setting.

18.2.2 Treatment of Exposed Surfaces.

18.2.2.1 Type M Grout. After the grout has set, the exposed surfaces shall be cut back one inch and immediately covered with a parge coat of mortar proportioned by weight of one part Portland cement, 2 parts sand, and sufficient water to make the mixture placeable. Parge coat shall have smooth, dense finish.

18.2.2.2 Type A Grout. Exposed surfaces shall have smooth, dense finish.

18.2.3 Curing. Grout and parge coat shall be cured in conformance with paragraph CURING.

19. FINISHES OF CONCRETE OTHER THAN FLOOR AND ROOF SLABS. Within 12 hours after forms are removed, surface defects shall be remedied as specified herein. Temperature of the concrete, ambient air, and mortar during remedial work including curing shall be above 50 degrees F. Fins and loose material shall be removed. Honeycomb, aggregate pockets, voids over 1/2-inch in diameter, and holes left by the rods or bolts shall be cut out to solid concrete, reamed, thoroughly wetted, brush-coated with neat cement grout, and filled with mortar. Mortar shall be a stiff mix of one part Portland cement to not more than 2 parts fine aggregate passing the No. 16 mesh sieve, and minimum amount of water using white Portland cement for all or part of the cement so that when dry, the color of the mortar shall match the adjoining concrete color. Mortar shall be thoroughly compacted in place. Holes passing entirely through walls shall be completely filled from the inside face by forcing mortar through to the outside face. Holes that do not pass entirely through the wall shall be packed full. Patchwork shall finish flush and in the same place as adjacent surfaces. Exposed patchwork shall be finished to match adjoining surfaces in texture and color. Patchwork shall be damp-cured for 72 hours. Protruding portions of bar supports shall be ground flush with concrete surfaces that will be exposed, painted, or plastered directly.

19.1 Smooth Finish. After the above operations have been completed, smooth finish shall be given to interior and exterior concrete surfaces that are to be painted or exposed to view. Smooth finish shall consist in thoroughly wetting and then brush-coating the surfaces with cement grout composed by volume of one part Portland cement to not more than 2 parts fine aggregate passing the No. 30 mesh sieve and mixed with water to the consistency of thick paint. White Portland cement shall be used for all or part of the cement, proportioned as determined by trial mixes, so that the final color of grout, when dry, will be approximately the same as the color of the surrounding concrete. Grout shall be cork- or wood-floated to fill all pits, air bubbles, and surface holes. Excess grout shall be scraped off with a trowel and the surface rubbed with burlap to remove any visible grout film. The grout shall be kept damp by means of fog spray during the setting period. The finish of any area shall be completed in the same day and the limits of a finished area shall be made at natural breaks in the finished surface. (Concrete patching compound may be used in lieu of cement grout to completely fill all pits, air bubbles, and surface holes of interior concrete surfaces indicated to receive textured coating specified in section: PAINTING, GENERAL. The compound shall be used in accordance with the manufacturer's directions, finished to match adjoining concrete in texture, and excess removed, as approved.).

20. CONCRETE FLOOR AND ROOF SLAB FINISHES. The ambient temperature of spaces being finished shall be not less than 50 degrees F. Finished floor and roof slab surfaces shall be true plan surfaces with no deviation in excess of 1/8 inch when tested with a 10-foot straightedge. Surfaces shall be pitched to drains. The dusting of finish surfaces with dry materials or additions of water to concrete surfaces will not be permitted.

20.1 Monolithic Finish. Except where otherwise specified, the concrete for floor and roof slabs shall be screeded and floated with straightedges to bring the surface to the required finish level with no coarse aggregate visible. The concrete, while still green but sufficiently hardened to bear a man's weight without deep imprint, shall be wood-floated to a true, even plane. After the surface moisture has disappeared, the surfaces shall be troweled to the required finish with no coarse aggregate visible. Floor surfaces shall be steel-troweled to a smooth, even, dense finish free from blemishes including trowel marks. Roof surfaces shall be lightly steel-troweled and left free of ridges and other projections.

20.2 Rough Slab Finish. Slabs to receive fill and mortar setting beds shall be screeded with straightedges to bring the surface to the required finish plane with no coarse aggregate visible.

20.3 Wood-Float Finish. Surfaces of interior or exterior foundations or slabs receiving equipment or machinery shall be screeded with straightedges to bring the surface to the required finish plane with no coarse aggregate visible. After surface moisture has disappeared the surfaces shall be finished with a float to an even textured surface.

20.4 Heavy-Duty Finish. Floors or slabs indicated to receive heavy-duty finish shall be screeded to a true, even plane 3/4-inch below the required finish level, and while the concrete is still green a hard-aggregate wearing surface shall be applied.

20.4.1 Mix. Concrete shall consist of selected aggregates, Portland cement, water, and additives where so indicated in the aggregate producer's basic formulation. Proportioning shall be in strict accordance with the aggregate producer's printed data. Coarse aggregate shall be uniformly graded diabase, basalt, emery, granite, or other natural or manufactured aggregate having equivalent hardness and wearing qualities, and 1/2-inch maximum size. Maximum water content shall be 3-3/4 gallons per bag of cement.

20.4.2 Placing and Finishing. The wearing-surface coat shall be screeded to a true, even plane and thoroughly tamped by mechanical equipment or rolled with rollers weighing not less than 10 pounds per linear inch of roller width to obtain maximum density for the full depth of the wearing-surface coat. After tamping or rolling, abrasive aggregate shall be sprinkled uniformly over the surface at the rate of 1/4 pound per square foot. After sprinkling the surface with aggregate there shall not less than 2 steel trowelings. The first troweling shall remove all marks and blemishes and bring the surface to a hard impervious finish. Subsequent troweling shall produce a ringing sound from the trowel and leave a burnished finish.

20.4.3 Curing and Protection. Immediately following the final troweling, the finished surface shall be cured for not less than 10 days in conformance with paragraph Impervious-Sheet Curing. Use of the floor shall not be permitted for at least 5 days after completion of curing and only light use shall be permitted for an additional 10-day period.

20.5 Nonslip Finish shall be given to exterior building entrances, exposed concrete floors of vestibules, platforms, ramps, and concrete stair threads and landings.

20.5.1 Abrasive Aggregate Finish shall be given to exterior concrete stair treads, entrances, and landings for buildings. The concrete shall be screeded and floated to the required finish level with no coarse aggregate visible. Abrasive aggregate shall be uniformly sprinkled over the floated surface at a rate of not less than 1/4 pound per square foot. The surface shall be steel-troweled to a smooth, even finish that is uniform in texture and appearance and free from blemishes including trowel marks. Immediately after curing, cement coating or laitance covering the abrasive aggregate shall be removed by steel brushing, rubbing with an abrasive stone, or sandblasting to expose the abrasive particles.

20.5.2 Broom Finish shall be given to exterior surfaces (except concrete stair treads, entrances, and landings for buildings). The concrete shall be screeded and floated to the required finish level with no coarse aggregate visible. After the surface moisture has disappeared and laitance has been removed, surfaces shall be steel-troweled to an even, smooth finish. The troweled surfaces shall be broomed with a fiber-bristle brush in a direction transverse to that of the main traffic.

20.6 Power-Machine Finish (Option). In lieu of hand finishing, an approved power finishing machine may be used in accordance with the directions of the machine manufacturer. The preparation of concrete surfaces for finishing by machine shall in general be as hereinbefore required for hand finishing. Finished surfaces shall be free of machine marks, ridges, or other blemish.

20.7 Vacuum Process or its equivalent may be used in applying floor finishes. The process shall dehydrate the concrete and simultaneously compact it with a pressure of not less than 1,500 pounds per square foot so that the concrete will be of no-slump consistency immediately after processing. Before placing the concrete, screed strips shall be set not over 10 feet apart. The concrete shall be screeded, and immediately thereafter the process shall be applied for 1 to 2 minutes per inch of slab thickness. After processing, slabs that are to receive concrete finishes and rough slabs that are to receive waterproofing or roofing shall be power-floated to a level uniform surface. Troweling shall then be performed for the various floor finishes hereinbefore specified.

21. CURING. Concrete shall be protected against moisture loss, rapid temperature change, mechanical injury, and injury from rain or flowing water, for a period of time given below corresponding to the cementing materials used in the concrete.

Types III, IIIA cement	3 days
Types I, IA, II, IIA, IP, IP-A cement	7 days
Types IS, IS-A, S, SA, N, or blends containing pozzolans, natural cement, or slag cement	10 days

xConcrete shall be maintained in a moist condition at temperature above 50 degrees F. throughout the specified curing period and until remedial work is started under paragraph FINISHES OF CONCRETE OTHER THAN FLOOR AND ROOF SLABS. Fuel-burning heaters shall be vented to the exterior. Concrete shall be protected from local applications of heat. Concrete shall be protected from rapid temperature change and rapid drying for the first 24 hours following the removal of temperature protection. Curing activities shall be started as soon as free water has disappeared from the surface of the concrete after placing and finishing. Formed undersurfaces of beams, girders, floor slabs, and other similar undersurfaces, shall be moist cured with forms in place for the full curing period, or, if forms are removed prior to the end of the curing period, by other approved means. Curing shall be accomplished by any of the following methods or combination thereof, as approved.

21.1 Moist Curing. Unformed surfaces shall be covered with burlap or mats, wetted before placing, and overlapped at least 6 inches. Burlap or mats shall be kept continually wet and in intimate contact with the surface. Where formed surfaces are cured in the forms, the forms shall be kept continually wet. If the forms are removed before the end of the curing period, curing shall be continued as on unformed surfaces, using suitable materials. Burlap shall be used only on surfaces that will be unexposed in the finished work and shall be in two layers.

21.2 Impervious-Sheet Curing. All surfaces shall be thoroughly wetted with a fine spray of water and be completely covered with waterproof paper, polyethylene sheeting, or with polyethylene-coated burlap having the burlap thoroughly water-saturated before placing. Covering shall be laid with light-colored side up. Covering shall be lapped not less than 12 inches and securely weighted down or shall be lapped not less than 4 inches and taped to form a continuous cover with completely closed joints. Sheets shall be weighted to prevent displacement or billowing from winds. Coverings shall be folded down over exposed edges of slabs and secured by approved means. Sheets shall be immediately repaired or replaced if tears or holes appear during the curing period.

21.3 Membrane-Forming Compound Curing. Before applying curing compound, tops of joints that are to receive sealant shall be tightly closed with temporary material to prevent entry of the compound and to prevent moisture loss during the curing period. The compound shall be applied on damp surfaces as soon as the moisture film has disappeared. The curing compound shall be applied by power spraying equipment using a spray nozzle equipped with a wind guard. The compound shall be applied in a two-coat, continuous operation at a coverage of not more than 400 square feet per gallon for each coat. When application is made by hand sprayers, the second coat shall be applied in a direction approximately at right angle to the direction of the first coat. The compound shall form a uniform, continuous, adherent film that shall not check, crack, or peel, and shall be free from pinholes or other imperfections. Surfaces subjected to rainfall within 3 hours after compound has been applied, or surfaces damaged by subsequent construction operations within the curing period shall be immediately resprayed at the rate specified above. Membrane curing compound shall not be used on surfaces that are to receive any subsequent treatment that depends on adhesion or bonding to the concrete (except that resin-base or chlorinated-rubber-base curing compounds may be used on floors that are to receive adhesive applications of resilient flooring). Membrane curing compound shall not be used on surfaces that are maintained at curing temperatures with free steam. Where membrane-forming curing compounds are permitted, permanently exposed surfaces shall be cured by use of a nonpigmented membrane-forming curing compound containing a fugitive dye. Where nonpigmented-type curing compounds are used, the concrete surface shall be shaded from the direct rays of the sun for the curing period. Surfaces coated with curing compound shall be kept free of foot and vehicular traffic, and from other sources of abrasion and contamination during the curing period.

22. SETTING BEDS required over slabs for floor finishes other than concrete are covered under other sections of these specifications in which the floor finish is specified.

23. PRECAST CONCRETE TRIM ITEMS are specified in section: MASONRY.

* * * * *

SECTION 4K

REINFORCED MASONRY

Index

1. Applicable Publications
2. Qualifications of Testing Agency
3. Sample Panels
3A. Definitions
4. Submittals
5. Delivery, Storage, and Handling
6. Environmental Conditions
7. Materials
8. Mortar Mixes
9. Grout Mixes
10. Preparation of Concrete Surfaces
11. Installation

1. APPLICABLE PUBLICATIONS. The following publications of the issues listed below, but referred to thereafter by basic designation only, form a part of this specification to the extent indicated by references thereto.

1.1 Federal Specifications.

SS-C-621b & Int. Am-2 (GSA-FSS)	Concrete Masonry Units, Hollow (and Solid, Prefaced and Unglazed)

1.2 U.S. Army Corps of Engineers Publications.

CRD-C 566-64	Grout Fluidifier

1.3 American Concrete Institute (ACI) Standard.

315-65 PR	Manual of Standard Practice for Detailing Reinforced Concrete Structures

1.4 American Society for Testing and Materials (ASTM) Standards.

A 82-72	Cold Drawn Steel Wire for Concrete Reinforcement
A 116-73	Zinc-Coated (Galvanized) Iron or Steel Farm-Field and Railroad Right-of-Way Wire Fencing.
A 153-73	Zinc Coating (Hot Dip) on Iron and Steel Hardware
A 615-75	Deformed and Plain Billet-Steel Bars for Concrete Reinforcement
C 5-59 (R 1974)	Quicklime for Structural Purposes
C 33-74a	Concrete Aggregates
C 39-72	Compressive Strength of Cylindrical Concrete Specimens
C 90-75	Hollow Load-Bearing Concrete Masonry Units
C 91-75	Masonry Cement
C 94-74a	Ready-Mixed Concrete
C 140-75	Sampling and Testing Concrete Masonry Units
C 144-76	Aggregate for Masonry Mortar
C 150-74	Portland Cement
C 207-74	Hydrated Lime for Masonry Purposes

C 270-73	Mortar for Unit Masonry
C 331-69 (R 1976)	Lightweight Aggregates for Concrete Masonry Units
C 404-70 (R 1975)	Aggregates for Masonry Grout
C 426-70	Drying Shrinkage of Concrete Block
C 427-64 (R 1972)	Moisture Condition of Hardened Concrete by Relative Humidity Method
C 476-71	Mortar and Grout for Reinforced Masonry
C 641-71	Staining Materials in Lightweight Concrete Aggregates
D 2240-75	Indentation Hardness of Rubber and Plastics by Means of a Durometer
E 149-66 (R 1973)	Bond Strength of Mortar to Masonry Units
E 447-74	Compressive Strength of Masonry Prisms

2. QUALIFICATIONS OF TESTING AGENCY. The Contractor shall retain at his expense a testing laboratory to perform the laboratory and field testing and sampling specified herein. The laboratory shall have all facilities required to perform the specified sampling and testing. Personnel employed in the testing shall have had previous experience in sampling and testing the materials involved. Information regarding testing laboratories and qualifications of testing personnel shall be submitted to the Contracting Officer for approval.

3. SAMPLE PANELS. After material samples are approved,mnd prior to starting masonry work, construct sample panels of each type and color of masonry. Sample panels shall not be built in or as part of the structure but shall be located where directed. Panels shall be not less than 6 feet long by 4 feet high. Panels shall be of typical wall thickness for the masonry represented. Panels shall show color range, texture, bond, mortar joints including tooling, anchors, wall ties, reinforcing bars, grouting, and cleaning of masonry. The approved sample panels after cleaning shall be used as a standard of workmanship for the type of masonry represented. Protect sample panels from the weather and construction operations until the masonry work controlled by the sample panels has been completed and approved. Remove sample panels after completion of work controlled by the panel. Erection of masonry will not be permitted until sample panel(s) have been approved.

3A. DEFINITIONS.

3A.1 Concealed masonry surfaces are defined as follows: Surfaces of foundation walls against which backfill is placed; surfaces covered by furring and wallboard, plaster, stucco, or masonry facings; surfaces above suspended ceilings.

3A.2 Exposed masonry surfaces are defined as all other masonry surfaces including those to be painted.

3A.3 Grout Lift and Grout Pour. A grout lift is defined as the layer of grout placed in a single continuous operation. A grout pour is defined as the entire height of grout fill placed in one day and is composed of a number of successively placed grout lifts.

4. SUBMITTALS.

4.1 Samples. The following samples shall be submitted for approval before work is started.

(1) Anchors and Ties – Two of each type proposed for use.

(2) Concrete Masonry Units – Shapes, sizes, and kinds in sufficient numbers to show full range of color and texture.

(3) Aggregates – One sample shall be taken at the source from each stockpile for each type aggregate specified herein. Each sample shall be collected by taking three incremental samples at random from the source material to make a composite sample of not less than 10 pounds.

4.2 Certificates of Conformance or Compliance. Before delivery of the following materials, notarized certificates, in triplicate attesting that materials meet the requirements specified shall be submitted for approval.

(1) Concrete Masonry Units

(2) Control Joint Key

(3) Lime

(4) Mortar Coloring

(5) Reinforcing Bars

4.3 Certified Laboratory Test Reports. In addition to the submittal of certificates specified herein, certified copies, in triplicate, of the reports of all tests listed below and required in referenced publications for the following materials shall be submitted for approval. The testing shall have been performed by an approved independent laboratory acceptable to the Contracting Officer within 6 months of submittal of reports for approval. Test reports on a previously tested material shall be accompanied by notarized certificates from the manufacturer certifying that the previously tested material is of the same type, quality, manufacturer, and make as that proposed for this project.

(1) Concrete Masonry Units – Linear drying shrinkage, compressive strength and absorption of each type of unit and popout and staining properties of light weight aggregates used in the units.

(2) Cement – Certified mill test reports of each mill lot.

4.4 Shop Drawings. The following shop drawings shall be submitted for approval prior to delivery of the materials to the job site.

(1) Reinforcing Bars. Shop drawings for reinforcing bars shall include plans, elevations, and details showing treatment of reinforcing at turns and offsets; intersections of similar and dissimilar materials; tops, bottoms, and ends of walls; control and expansion joints; and wall openings. Shop drawings shall also show details of positioning devices used to hold the vertical reinforcing bars in the proper position within the cells.

5. DELIVERY, STORAGE, AND HANDLING. Handle, store, and protect masonry units in a manner to avoid chipping, breakage, or contact with the soil or contaminating materials and exposure to the elements. Deliver concrete masonry units to the jobsite in air dry condition as defined hereinafter. Keep anchors and ties free of rust. Steel reinforcing bars shall be free of loose scale and rust. Deliver cement and lime in unbroken bags, barrels, or other approved containers, plainly marked and labeled with the manufacturers' names and brands. Store cementitious materials in dry, weathertight sheds or enclosures or under watertight tarpaulins. Store and handle cement in a manner which will prevent the inclusion of foreign materials and damage by water or dampness.

6. ENVIRONMENTAL CONDITIONS.

6.1 Hot Weather Installation. Masonry erected when the ambient air temperature is more than 99 degrees F. in the shade and the relative humidity is less than 50 percent shall be protected from direct exposure to wind and sun for 48 hours after installation.

6.2 Cold Weather Installation. No frozen work shall be built upon. Do not lay masonry during temperatures below minus 10 degrees F. unless authorized in writing. Before erecting masonry during temperatures below 40 degrees F., submit for approval a written statement giving the methods proposed to heat the masonry materials and to protect the masonry from freezing. Keep masonry units completely covered and free from frost and ice at all times and maintain them at a minimum temperature of 32 degrees F. when laid. Maintain temperature of mortar and grout between 40 degrees F. and 120 degrees F. by heating mixing water and/or sand. Temperature of mixing water or of water and sand introduced to cement shall not exceed 160 degrees F.

7. MATERIALS.

7.1 General. The source of materials which will affect the appearance of the finished work shall not be changed after the work has started. Wire gages specified herein are American Steel Wire Gages. Materials shall conform to the respective specifications and other requirements specified below.

7.2 Admixtures. The high-lift grout admixture shall conform to CRD-C 566 and in addition shall produce an expansive action in the plastic grout sufficient to offset initial water loss shrinkage and promote bonding of the grout to all interior faces of the masonry units. Other admixtures may be used in mortar or grout provided that the admixture does not adversely effect bond or compressive strength of mortar or grout designed without the use of the admixture. Anti-freeze compounds shall not be used. The admixtures shall not contain calcium chloride salts or any other chemical that will adversely affect metals or the coatings of metals embedded in the mortar or grout.

7.3 Aggregate for Mortar. ASTM C 144, except that not less than 3 percent nor more than 15 percent shall pass the No. 100 sieve. Aggregate used in mortar for joints 1/4-inch or less shall have 100 percent passing the No. 8 sieve with 10 percent being retained on the No. 16 sieve.

7.4 Aggregate for Grout.

7.4.1 Fine Aggregate. ASTM C 404 or C 144.

7.4.2 Pea Gravel. Clean or washed gravel conforming to ASTM C 404, except that 100 percent shall pass the 3/8-inch screen and not more than 5 percent shall pass the No. 8 sieve.

7.4.3 Coarse Aggregate. ASTM C 404, size No. 8 or ASTM C 33, 3/4-inch maximum size as indicated in Grading Table for coarse aggregates.

7.4.4 Lightweight Aggregate. ASTM C 331 except gradation shall conform to ASTM C 33 or C 404 as indicated in Grading Table.

7.5 Anchors, Ties, and Centering Devices.

7.5.1 Wire Devices. Factory fabricated from steel wire conforming to ASTM A 82. Wire devices in all walls shall be formed from wire that has been zinc coated in accordance with ASTM A 116, Class 1.

7.5.1.1 Wall ties shall be formed from not lighter than 9 gage wire. Width of ties shall be not less than 4 inches and length shall be 2 inches plus or minus 1/8-inch less than the thickness of the wall in which it is to be placed.

7.5.1.2 Centering clips shall be formed from not lighter than 9 gage wire. Clips shall be of a design that will prevent displacement of the reinforcing bars during the course of construction.

7.5.1.3 Wire anchors for use with embedded slots or wire inserts shall be formed from not lighter than 9 gage wire looped and closed.

7.5.2 Dovetail Anchors. Dovetail anchors for use with embedded slots shall be not lighter than 16 gage steel not less than one-inch wide. Anchors shall be crimped, corrugated, or bent at the end to provide anchorage. Dovetail anchors shall be hot-dip zinc-coated in accordance with ASTM A 153, Class B-2.

7.6 Portland Cement. ASTM C 150, Type I, II, or III, including the requirements for low alkali content.

7.7 Concrete Masonry Units.

7.7.1 Aggregates. ASTM C 331 except as follows.

7.7.1.1 Testing of lightweight aggregates for drying shrinkage as stipulated in ASTM C 331 will not be required.

7.7.1.2 Lightweight aggregates and blends of lightweight and heavier aggregates in proportions used in producing the units shall comply with the following requirements when tested for stain-producing iron compounds in accordance with ASTM C 641: by visual classification method, the iron stain deposited on the filter paper shall not exceed the "light stain" classification; by chemical analysis method and reported as $Fe^2 O^3$, the iron stain deposited on the filter paper from 200-gram sample shall not exceed 1.2 milligrams of Fe_2O_3.

7.7.2 The linear drying shrinkage of concrete masonry units shall not exceed 0.045 percent when tested in accordance with ASTM C 426.

7.7.3 Kinds and Shapes. In addition to the requirements specified above, concrete masonry units of the various kinds shall conform to the specifications referenced below. Units shall include closer, jamb, header, lintel, and bond beam units and special shapes and sizes to complete the work as indicated. In exposed interior masonry surfaces, units having a bullnose shall be used for vertical external corners except at door, window, and louver jambs. Radius of bullnose shall be one inch. All units used in exposed masonry surfaces in any one building shall have a uniform fine to medium texture and a uniform color.

7.7.3.1 Hollow Concrete Masonry Units. ASTM C 90, Type I, grade N-I having an oven-dry weight of over 125 pounds per cubic foot.

7.8 Control Joint Keys. Factory-fabricated solid section of natural or synthetic rubber, plastic, or other rubber-like material. The material shall be resistant to oils and solvents and shall remain flexible at a temperature of minus 40 degrees F. after exposure for 5 hours. Durometer hardness shall not be less than 70 when tested in accordance with ASTM D 2240. Shear section shall be solid and shall be not less than 5/8-inch thick. Flange shall be 3/8-inch thick with a tolerance of plus or minus 1/16-inch.

7.9 Lime Paste. Lime paste shall be made with pulverized quicklime or hydrated lime. Hydrated lime processed by the steam method shall be allowed to soak not less than 24 hours. Quicklime and other hydrated lime shall be allowed to soak not less than 72 hours. In lieu of hydrated-lime paste for use in mortar, the hydrated lime may be added in the dry form.

7.9.1 Hydrated Lime. ASTM C 207, type S.

7.9.2 Pulverized Quicklime. ASTM C 5, except 100 percent shall pass the No. 20 sieve and 90 percent shall pass the No. 50 sieve.

7.10 Mortar Coloring. Chemically inert, finely ground limeproof pigment.

7.11 Reinforcing Bars. ASTM A 615, grade 40.

7.12 Water. Water used in mortar and grout shall be taken from a supply distributed for domestic purposes and at the time of mixing shall be clean and free of acids, alkalies, or other organic materials.

8. MORTAR MIXES.

8.1 Proportions. Mortar shall be Type S in accordance with the proportion specifications of ASTM C 270 as modified below. Materials shall be Portland cement, hydrated lime or lime paste, aggregate, mortar coloring and water as specified herein. The mortar shall have a flow, after suction, of 70 percent or more when tested for water retention in accordance with ASTM C 91, except mortar shall be mixed to an initial flow of 125 to 135 percent.

8.2 Color. Mortar coloring, not to exceed 3 percent of the weight of cement for carbon black and 15 percent of the weight of cement for all other pigments, shall be added to the mortar used for exposed masonry surfaces to produce a uniform color matching the block. The color pigment should be ground into the cement at the cement mill or shall be furnished in accurately pre-measured and packages units that can be added without measuring to a measured amount of cement.

9. GROUT MIXES.

9.1 Proportions. Grouts shall beixed in laboratory established proportions to attain a compressive strength at 28 days of not less than 2,000 pounds per square inch when tested in accordance with ASTM C 91 for fine aggregate and ASTM C 39 for grout containing coarse aggregate. Grout shall be classified as fine, low lift, and high lift types as specified below and shall be used subject to the limitations of Table I.

9.1.1 Fine Grout. Fine grout shall consist of Portland cement, lime paste or hydrated lime,and fine aggregate mixed with sufficient water to obtain a pouring consistency without segregation of the constituents. Slump shall be approximately 5 inches.

9.1.2 Low-Lift Grout. Low-lift grout shall consist of Portland cement, lime paste or hydrated lime, fine aggregate and coarse aggregate mixed with sufficient water to obtain a pouring consistency without segregation of the constituents. Slump shall be approximately 5 inches. Maximum size of coarse aggregate for grout shall be in accordance with Table I.

9.1.3 High-Lift Grout. High-lift grout shall consist of Portland cement, grout admixture, fine aggregate, and pea gravel or coarse aggregate mixed with sufficient water to obtain a consistency suitable for pumping without segregation of the constituents. Slump shall be between 9 and 11 inches. The maximum size of coarse aggregate shall be in accordance with Table I.

9.2 Mixing. Batching and mixing of high-lift grout, including equipment used therein, shall conform to the applicable requirements of ASTM C 94.

10. PREPARATION OF CONCRETE SURFACES. Clean laitance, dust, dirt, oil, organic matter or other foreign materials from concrete surface upon which reinforced masonry is to be placed. Use sand blasting, if necessary, to remove laitance from pores and to expose the aggregate.

11. INSTALLATION.

11.1 Laying Masonry Units. Space back-up courses to level with facing courses where metal ties occur. Adjust each unit to its final position while mortar is still soft and plastic. Remove and relay in fresh mortar, any unit that is disturbed after mortar has stiffened. Keep chases, raked-out joints, and spaces to be grouted free from mortar and other debris. Units used in exposed masonry surfaces shall be free from chipped edges or other imperfections detracting from the appearance of the finished work.

11.1.1 Tolerances. Lay masonry plumb, true to line, with courses level. Bond pattern shall be kept plumb throughout. Lay masonry within the following tolerances.

11.1.1.1 Variation from the plumb in the lines and surfaces of columns, walls and arises.

(1) In adjacent masonry units – 1/8-inch.

(2) In 10 feet – 1/4-inch.

(3) In any story or 20 feet maximum – 3/8-inch.

(4) In 40 feet or more – 1/2-inch.

11.1.1.2 Variations from the plumb for external corners, expansion joints, and other conspicuous lines.

(1) In any story or 20 feet maximum – 1/4-inch.

(2) In 40 feet or more – 1/2-inch.

11.1.1.3 Variations from the level or grades indicated on the drawings for exposed lintels, sills, parapets, horizontal grooves, and other conspicuous lines.

(1) In any bay or 20 feet maximum – 1/4-inch.

(2) In 40 feet or more – 1/2-inch.

11.1.1.4 Variations of the linear building lines from established position in plan and related portion of columns, walls, and partitions.

(1) In any bay or 20 feet maximum – 1/2-inch.

(2) In 40 feet or more – 3/4-inch.

11.1.1.5 Variation in cross sectional dimensions of columns and in thickness of walls.

(1) Minus – 1/4-inch.

(2) Plus – 1/2-inch.

11.1.2 Cutting and Fitting. Wherever possible, use full units of the proper size in lieu of cut units. Cutting and fitting, including that required to accommodate the work of others, shall be done by masonry mechanics using power masonry saws. Concrete masonry units shall be wet cut. Wet cut units, before being placed in the work, shall be dried to the same surface-dry appearance as uncut units being laid in the wall. Cut edges shall be clean, true and sharp. Make openings carefully so that wall plates, cover plates or escutcheons required by the installation will completely conceal the openings and will have bottoms parallel with the masonry joints. Cut webs of hollow masonry units to the minimum required for proper installation. Provide reinforced masonry lintels above openings over 12 inches wide for pipes, ducts, and cable trays unless steel sleeves are used.

11.1.3 Embedded Items. Fill spaces around metal door frames and other built-in items with mortar. Openings around flush-mount electrical outlet boxes in wet locations, including the flush joint above the box, shall be pointed with mortar. Anchors, ties, wall plugs, accessories, flashings, pipe sleeves and other items required to be built-in shall be built-in as the masonry work progresses. Embed anchors, ties and joint reinforcement fully in the mortar. Fill cells receiving anchor bolts and cells of the first course below bearing plates with mortar or grout.

11.1.4 Unfinished Work. Step back unfinished work for joining with new work. Do not use toothing. Remove loose mortar and thoroughly clean the exposed joints before laying new work. After cleaning, dampen the surfaces of clay or shale brick as required to obtain a good bond with subsequent work.

11.1.5 Jointing. Tool joints when the mortar is thumbprint hard. Tool horizontal joints first. Brush joints to remove all loose and excess mortar. Mortar joints shall be finished as follows.

11.1.5.1 Flush Joints. Joints in concealed masonry surfaces and vertical joints in exposed masonry and joints above electrical outlet boxes in wet areas shall be flush cut. Make flush cut joints by cutting off the mortar flush with the face of the wall. Joints in unparged masonry walls below grade shall be pointed tight.

11.1.5.2 Tooled Joints. Horizontal joints in exposed exterior and interior masonry surfaces shall be raked.

11.1.5.3 Raked Joints. In exposed exterior masonry surfaces, rake control joints constructed with mortar, dummy joints in bond beams and joints between door frames and abutting masonry walls to a depth of 3/4-inch ready for calking. In exposed interior masonry surfaces rake control joints constructed with mortar to a depth of 1/2-inch areas. On the interior side of exterior door frames rake joints between door frames and abutting masonry walls to a depth of 3/8-inch. In showers, joints shall be raked to a depth of 3/8-inch, filled with pointing mortar, and finished flush with the tile surface.

11.1.6 Joint Widths. Joint widths shall be approximately as follows.

11.1.6.1 Concrete Masonry Units. Three-eight-inch wide.

11.1.7 Forms and Shores. Where required, construct forms to the shapes, lines, and dimensions of the members indicated. Construct forms sufficiently rigid to prevent deflections which may result in cracking or other damage to supported masonry and sufficiently tight to prevent leakage of mortar and grout. Do not remove supporting forms or shores until the supported masonry has acquired sufficient strength to support safely its weight and any construction loads to which it may be subjected. In no case shall supporting forms or shores be removed in less than 10 days. At least 16 hours shall have elapsed after grouting masonry columns or walls before applying uniform loads and an additional 48 hours shall have elapsed before applying concentrated loads.

11.2 Reinforced Hollow Unit Masonry. Reinforced hollow unit masonry shall consist of hollow concrete masonry units reinforced vertically and horizontally with steel bars located within cells in the units and with cells containing reinforcing bars filled solidly with grout. Lay hollow masonry units so as to preserve the vertical continuity of cells filled with grout. The minimum clear horizontal dimensions of vertical cores shall be 2 inches by 3 inches. Units shall be masonry bonded at corners. Intersections shall be anchored by reinforcing bars or stirrups as indicated.

11.2.1 Cleanouts. Provide cleanout holes at the bottom of every pour in cores containing vertical reinforcement when the height of the grout pour exceeds 48 inches. Establish a new series of cleanouts if grouting operations are stopped for more than 4 hours. Cleanouts shall be not less than 3- by 4-inch openings cut from one face shell. Manufacturers' standard cut-out units may be used at the Contractor's option. Do not plug cleanout holes until masonry work, reinforcement, and final cleaning of the grout spaces have been completed.

11.2.2 Bond Pattern. Except where stacked bond is indicated, lay hollow masonry units in running bond.

11.2.3 Mortar Joints. Fill bed joints with mortar for the full thickness of the face shell. Where only cells containing reinforcement are to be grouted, spread cross webs around such cells with mortar to prevent leakage of grout. Provide grout barriers not more than 25 feet apart as required to limit the horizontal flow of grout for each grout pour. Butter head joints for the full thickness of the face shell and shove the units into place. Avoid fins of mortar that protrude into cells to be grouted.

11.2.4 Bond Beams and Bond Beam Lintels. Bond beams and bond beam lintels shall consist of bond beam units, reinforced as indicated but with not less than two No. 4 bars where not indicated and filled with grout. Cut webs of hollow brick units as required to form bond beam units. Use open bottom type bond beam units over cells to be filled. Place wire mesh or small mesh metal lath under open bond beam units if used over cells not to be filled. Lintels shall bear as shown on the drawings. Structural bond beams at floor and roof levels shall be continuous at control joints. All other bond beams shall be discontinuous at control joints. All bond beams shall be discontinuous at control joints.

11.2.5 Control Joints. Provide control joints in reinforced hollow concrete masonry walls and partitions where indicated. Construct control joints in accordance with the details, using special control joint units, metal sash jamb units and control joint keys, or open end stretcher units. Form dummy control joints in continuous bond beams at control joint locations. Rake control joints as specified in paragraph entitled, "Jointing". Calk control joints in exposed exterior surfaces and in exposed interior masonry surfaces. Calking is specified in section: CALKING AND SEALANTS.

11.2.6 Parging. Parge with Portland cement mortar, the outside face of below grade exterior concrete masonry unit walls enclosing useable rooms and spaces. Parging shall be extended from the top of footings and shall be stopped at the finished grade. Apply parging in two 3/8-inch thick coats. Cross-scratch the first coat and trowel the second coat smooth. Damp-cure the parging coat for at least 3 days before backfill is placed against it. Protect parging from freezing temperatures until it has hardened.

11.3 Placing Reinforcing Steel. Prior to placing grout, clean all reinforcement of loose, flaky rust, scale, grease, mortar, grout, or other coating which might destroy or reduce its bond with the grout. Unless otherwise indicated, the details of reinforcement shall conform to ACI 315. Do not bend or straighten reinforcing in a manner injurious to the steel. Do not use bars with kinks or bends not shown on the drawings. Placement of reinforcement shall be inspected and approved prior to placing grout. Vertical bars shall be spliced only where indicated.

11.3.1 Positioning Bars. Position vertical bars accurately at the centerline of the wall. Maintain a minimum clearance between the bars and masonry units of 1/2-inch between parallel bars of one diameter of the reinforcement. Hold vertical reinforcing in place using metal supports, centering clips, spacers, ties, or caging-devices located near the ends of each bar and at intermediate intervals of not more than 192 diameters of the reinforcement. Wire column and pilaster ties in position around the vertical steel; laying ties in mortar joints will not be permitted.

11.3.2 Splices. Locate splices only where shown on the drawings. Stagger splices in adjacent bars. Lap bars a minimum of 40 diameters of the reinforcement or 2 feet whichever is greater. Welded or mechanical connections shall develop at least 125 percent of the strength of the reinforcement.

11.4 Placing Grout. Place grout using a hand bucket, concrete hopper, or grout pump. Place grout so as to completely fill the grout spaces without segregation of the aggregates. Where grouting is discontinued for more than one hour, stop the grout 1-1/2 inches below the top of a course to form a key at pour joints. The height of grout pours and type of grout used shall be limited by the dimensions of grout spaces as indicated in table III.

11.4.1 Grout Holes. Provide grouting holes in slabs, spandrel beams, and other in-place overhead construction. Locate holes over vertical reinforcing bars. Provide additional openings spaced not more than 16 inches on centers where grouting of all hollow unit masonry is indicated and where reinforced two-wythe solid masonry is indicated. Openings shall not be less than 4 inches in diameter or 3- by 4-inches in horizontal dimensions. Upon completion of grouting operations, plug grouting holes and finish to match surrounding surfaces.

11.4.2 Grouting Equipment.

11.4.2.1 Grout Pumps. Pumping through aluminum tubes will not be permitted. Operate pumps to produce a continuous stream of grout without air pockets. Upon completion of each day's pumping, eject grout from pipeline without contamination or segregation of the grout. Remove waste materials and debris from the equipment. Dispose of waste materials, debris, and all flushing water outside the masonry.

11.4.2.2 Vibrators. Internal vibrators shall maintain a speed of not less than 5,000 impulses per minute when submerged in the grout. Maintain at least one spare vibrator, or sufficient parts for repairing vibrators, at the site at all times. Apply vibrators at uniformly spaced points not further apart than the visible effectiveness of the machine. Limit duration of vibration to time necessary to produce satisfactory consolidation without causing segregation.

11.4.3 Low-Lift Method. Place grout as masonry is erected at a rate that will not cause displacement of the masonry due to hydrostatic pressure of the grout. If mortar has been allowed to set prior to grouting, remove all fins protruding more than 1/2-inch into the grout space. Place grout in final position within 2-1/2 hours after mixing when the air temperature 80 degrees F. or higher and 3-1/2 hours after mixing when the air temperature is less than 80 degrees F. Rod or puddle grout during placement using a one inch by 2 inch wood stick or a mechanical vibrator to insure complete filling of the grout space. Do not insert the vibrators into lower pours that are in a semi-solidified state.

11.4.4 High-Lift Method. Lay masonry to the top of a pour before placing grout. Do not pour grout in hollow unit masonry until mortar joints have set for at least 24 hours. Clean mortar droppings from the bottom of the grout space and from reinforcing steel. Remove mortar fins protruding more than 1/2-inch into the grout space by dislodging the projections with a rod or stick as the work progresses or by washing the grout space at least twice a day during erection using a high pressure stream of water. Place grout in final position within 1-1/2 hours after mixing when air temperature is 80 degrees F. or higher and 2-1/2 hours after mixing when the air temperature is less than 80 degrees F. Place grout in lifts not to exceed 4 feet in height, with a waiting period between lifts, dependent on weather and absorption rate of the masonry, in order to place the succeeding lift after the preceding lift becomes plastic but prior to initial set. The first lift shall be consolidated using mechanical vibrators. After the required waiting period, place the second lift and consolidate with the vibrator extending 12 to 18 inches into the previous lift. Do not insert vibrators into lower pours that are in a semi-solidified state. Repear the waiting, pouring, and consolidating process until the top of the grout pour is reached. Reconsolidate the top pour after the required waiting period. The high-lift grouting of any section of wall between lateral flow barriers shall be completed to the top of a pour in one working day unless a new series of cleanout holes is established and the resulting horizontal construction joint cleaned.

11.4.5 Blowouts. Brace walls against wind and other forces during construction. Allow sufficient time between lifts to preclude displacement of solid masonry units or cracking of face shells of hollow masonry units. If blowouts, misalinement, or cracking of face-shells should occur during construction, tear down and re-build the wall at no additional cost to the Government.

11.5 Pointing and Cleaning. After mortar joints have attained their initial set but prior to hardening, completely remove mortar and grout daubs or splashings from exposed masonry surfaces. Before completion of the work, rake out all defects in joints in exposed masonry surfaces, fill with mortar and tool to match existing joints. Immediately after grout work is completed remove scum and stains which have percolated through the masonry using a high pressure stream of water. Do not use metal tools or metal brushes for cleaning.

11.5.1 Concrete Masonry Units. Dry brush exposed concrete masonry unit surfaces at the end of work each day and after any required pointing. Use stiff-fiber bristled brushes only.

11.6 Field Tests.

11.6.1 Air-Dry Conditions. Sampling and testing of concrete masonry units for air-dry condition will be performed by the Government. Upon delivery of units to the project site and periodically thereafter, samples shall be selected at random from stockpiles and tested in accordance with ASTM C 427. Air-dry condition is defined as the moisture condition of a concrete masonry unit in a state of equilibrium with a relative humidity of not greater than 15 percent higher than the average relative humidity at the project site, except that the relative humidity of the unit at equilibrium shall not exceed 85 percent and will not be required to be less than 50 percent. The average relative humidity at the project site shall be as determined by the nearest U.S. Weather Bureau station from the total of annual observations recorded for the month in which the unit is delivered.

11.6.2 Mortar and Grout. Mortar and grout shall be laboratory-proportioned and tested by a qualified testing laboratory. Certified copies of laboratory established proportions shall be submitted with the required test reports and test data. Laboratory-established proportions shall not be changed and materials with different physical or chemical characteristics shall not be used in mortar for the work unless additional evidence is furnished that the mortar meets the specified requirements.

11.6.3 Mortar and Grout Admixtures. When it is proposed to use a mortar admixture, test reports indicating the advantages to result shall be submitted. Testing shall be performed by the laboratory that designed the mortar mix. Six test specimens shall be made from mortar without admixture, as control specimens, and six test specimens shall be made from the mortar containing admixture. The mortar used in this testing shall be identical except for the admixture and shall be designed and mixed from identically graded aggregates and from the same brand and type of cement, in strict conformance to the properties specified hereinbefore for mortar. The mortar with and without and admixture shall have the same aggregate ratio, water retention, and compressive strength as stipulated. Admixture shall be used in conformance with manufacturer's recommendations. Each of the mortars shall be tested for bond strength in conformance with ASTM E 149, and shall be tested for water retention and compressive strength in conformance with ASTM C 270.

11.6.4 Field Tests for Strength of Mortar and Grout. The strengths specified for grout and mortar shall be verified during the progress of the work by testing samples taken at the job site as follows. All sampling, shall be performed by the Contractor. The testing laboratory shall test the samples.

11.6.4.1 Mortar. Take at least three specimens each day of mortar placed that day. Spread a layer of mortar 1/2-inch to 5/8-inch thick on the masonry units and allow to stand for one minute. Remove the mortar and place it in a 2-inch by 4-inch cylinder in two layers, compressing the mortar into the cylinder using a flat end stick or fingers. Lightly tap the mold on opposite sides, level off and immediately cover molds and keep them damp until taken to the laboratory. After 48 hours, remove molds and place specimens in a fog room until tested in a damp condition. Samples shall be tested in accordance with the applicable portions of ASTM C 39 and shall exhibit a minimum ultimate compressive strength of 1,800 pounds per square inch.

11.6.4.2 Grout. Take at least three specimens each day of grout placed that day. On a flat non-absorbent base, form a space approximately 3 inches by 3 inches by 6 inches using masonry units having the same moisture condition as those being laid. Line the space with a permeable paper or porous separator so that water may pass through the liner into the masonry units. Thoroughly mix or agitate grout to obtain a fully representative mix and place into molds in two layers. Puddle each layer with a one-inch by 2-inch puddling stick to eliminate air bubbles. Level off and immediately cover molds and keep them damp until taken to the laboratory. After 48 hours, remove molds and place specimens in a fog room until tested in the damp condition. Samples shall be tested in accordance with the applicable portions of ASTM C 39 and shall exhibit a minimum ultimate compressive strength of 2,000 pounds per square inch.

TABLE I

POUR HEIGHT AND TYPE OF GROUT FOR VARIOUS GROUT SPACE DIMENSIONS

Grout Space Dimensions		Grout		Maximum
Minimum Horizontal Dimensions of Core (inches)	Minimum Width of Collar Joint (inches)	Type (See paragraph entitled "Grout")	Course Aggregate	Height of Grout Pour (inches)
2 x 3	3/4	Fine or mortar	None	8
	2	Fine or low lift	ASTM C 404, Size 8	8
2 x 4		Fine or mortar	None	16
2-1/2 x 4		Fine or low lift	ASTM C 404, Size 8	24
3 x 4	3	High lift	3/8-inch pea gravel	72*
3-1/2 x 4	3-1/2	High lift	3/8-inch pea gravel	180*
5 x 6		High lift	ASTM C 33, 3/4-inch Max.	180*
	5	Brick floated in grout	3/8-inch pea gravel	8

*Where only cells of hollow masonry units containing reinforcement are grouted, the maximum height of the pour shall not exceed the distance between bond beams.

* * * * *

SECTION 4L

CONCRETE SIDEWALKS, AND CURBS

Index

1. Applicable Publications
2. Submittals
3. Storage
4. Concrete
5. Joint Materials
6. Subgrade Preparation
7. Forms
8. Concrete Placement and Finishing
9. Curing and Protection
10. Field-Control Tests

1. APPLICABLE PUBLICATIONS. The following publications of the issues listed below, but referred to thereafter by basic designation only, form a part of this specification to the extent indicated by the references thereto.

1.1 American Society for Testing and Materials (ASTM) Publications.

C 94-74a	Ready-Mixed Concrete
C 150-74	Portland Cement
C 171-69 (R 1975)	Sheet Materials for Curing Concrete
C 173-75	Air Content of Freshly Mixed Concrete by the Volumetric Method
C 231-75	Air Content of Freshly Mixed Concrete by the Pressure Method
C 260-74	Air-Entraining Admixtures for Concrete
C 309-74	Liquid Membrane-Forming Compounds for Curing Concrete
D 1751-73	Preformed Expansion Joint Fillers for Concrete Paving and Structural Construction (Nonextruding and Resilient Bituminous Types)
D 1752-67 (1973)	Preformed Sponge Rubber and Cork Expansion Joint Fillers for Concrete Paving and Structural Construction
C 1850-74	Concrete Joint Sealer, Cold-Application Type

2. SUBMITTALS.

2.1 Certified Laboratory Test Reports. Before delivery of materials, certified copies in triplicate of the reports of all tests required in referenced publications shall be submitted to and approved by the Contracting Officer. The testing shall have been performed by an approved independent laboratory, acceptable to the Contracting Officer, within one year of submittal of reports for approval. Test reports on previously tested material shall be accompanied by notarized certificates from the manufacturer certifying that the previously tested material is of the same type, quality, manufacturer, and make as that proposed to be supplied.

2.2 Concrete Certification Report. A concrete certification report shall be furnished with each batch of concrete prior to unloading at the site in accordance with ASTM C 94 Section 15.

3. STORAGE. Storage accommodations for concrete materials shall be subject to approval and shall afford easy access for inspection and identification of each shipment in accordance with test reports.

3.1 Cement. Immediately upon receipt on worksite, cement shall be stored separately in a dry, weathertight, properly ventilated structure and adequate provision made to prevent absorption of moisture.

3.2 Aggregates. Aggregates shall be stored to assure good drainage, to preclude inclusion of foreign matter, and to preserve gradation.

4. CONCRETE.

4.1 Sidewalk Concrete. Concrete and the equipment, workmanship, and materials therefor shall conform to the applicable requirements of section: CONCRETE except as specified below. Concrete shall be class B. The maximum size of coarse aggregate shall be 1-1/2 inches. Concrete shall have a slump of not more than 3 inches. The concrete mixtures shall have air content by volume of concrete, based on measurements made immediately after discharge from the mixer, of 3 to 5 percent. Air content shall be determined in accordance with ASTM C 173 or C 231. The latter is intended for use with concretes and mortals made with relatively dense natural aggregates.

4.2 Curb Concrete. Concrete and the equipment, workmanship and materials therefor shall conform to the applicable requirements of section: CONCRETE, except as specified below. Concrete shall be class B. The maximum size of coarse aggregate shall be 1-1/2 inches. Concrete shall have a slump of not more than 3 inches. The concrete mixtures shall have air content by volume of concrete, based on measurements made immediately after discharge from the mixer, of 3 to 5 percent.

5. JOINT MATERIALS.

5.1 Expansion joint fillers shall conform to ASTM D 1751 or D 1752 or shall be resin impregnated fiberboard conforming to the physical requirements of ASTM D 1752.

6. SUBGRADE PREPARATION.

6.1 Sidewalk Subgrade. The subgrade shall be constructed true to grade and cross section. The subgrade shall be thoroughly wetted and then compacted with 2 passes of a 500-pound roller. Yielding material deflecting more than 1/2 inch under the specified roller shall be removed to a depth of not less than 4 inches below subgrade elevation and replaced with an approved granular material. The material shall then be compacted as described above. The completed subgrade shall be tested for grade and cross section with a template extending the full width of the sidewalk and supported between side forms. The subgrade shall be maintained in a smooth, compacted condition, in conformity with the required section and established grade until the concrete is placed. The subgrade shall be in a moist condition when the concrete is placed. The subgrade shall be prepared and protected so as to provide a subgrade free from frost when the concrete is deposited.

6.2 Curb Subgrade. The subgrade shall be constructed true to grade and cross section. The subgrade shall be of materials equal in bearing quality to the subgrade under the adjacent roadway, street, or open storage area and shall be placed and compacted to conform with applicable requirements of the section: EARTHWORK. The subgrade shall be tested for grade and cross section by means of a template extending the full width of the curb, gutter, entrance, or combination curb and gutter. The subgrade shall be maintained in a smooth, compacted condition, in conformity with the required section and established grade until the concrete is placed. The subgrade shall be in a moist condition when concrete is placed. The subgrade shall be prepared and protected so as to produce a subgrade free from frost when the concrete is deposited.

7. FORMS.

7.1 Sidewalk Forms. Forms shall be of wood or steel, straight, of sufficient strength to resist springing during depositing and consolidating concrete, and of a height equal to the full depth of the finished sidewalk. Wood forms shall be surfaced plank, 2 inch nominal thickness, straight and free from warp, twist, loose knots, splits or other defects. Wood forms shall have a nominal length of 10 feet, with a minimum of 3 stakes per form, at maximum spacing of 4 feet. Corners, deep sections, and radius bends shall have additional stakes and braces, as required. Radius bends may be formed with 3/4 inch boards, laminated to the required thickness. Steel forms shall be channel-formed sections with a flat top surface and with welded braces at each end and at not less than 2 intermediate points. Form ends shall be interlocked and self-alineing. Forms shall include flexible forms for radius forming, corner forms, form spreaders, and fillers. Forms shall have a nominal length of 10 feet, with a minimum of 2 welded stake pockets per form. Stake pins shall be solid steel rods with chamfered heads and pointed tips, designed for use with steel forms. Forms shall be set with the upper edge true to line and grade and shall be held rigidly in place by stakes placed at intervals not to exceed 4 feet. After forms are set, grade and alinement shall be checked with a 10 foot straightedge. Forms shall conform to line and grade with an allowable tolerance of 1/8-inch in any 10 foot long section. Forms shall have a transverse slope as indicated. Forms shall be coated with form oil each time before concrete is placed. Wood forms may, instead, be thoroughly wetted with water before concrete is placed, except that with probable freezing temperatures, oiling is mandatory. Side forms shall not be removed for less than 12 hours after finishing has been completed.

7.2 Curb Forms. Forms shall be of wood or steel, straight, and of sufficient strength to resist springing during depositing and consolidating the concrete. The outside forms shall have a height equal to the full depth of the curb. The inside form of curb shall have batter as indicated and shall be securely fastened to and supported by the outside form. Straight forms of wood shall be surfaced plank, 2 inch nominal thickness, straight and free from warp, twist, loose knots, splits, or other defects. Wood forms shall have a nominal length of 10 feet, with a minimum of 3 stakes per form, at maximum spacing of 4 feet. Corners, deep sections, and radius bends shall have additional stakes and braces, as required. Radius bends may be formed with 3/4-inch boards, laminated to the required thickness. Steel forms shall be channel-formed sections with a flat top surface and with welded braces at each end and at not less than 2 intermediate points. Form ends shall be interlocked and self-alineing. Forms shall include flexible forms for

radius forming, corner forms, form spreaders, and fillers. Forms shall have a nominal length of 10 feet, with a minimum of 2 welded stake pockets per form. Stake pins shall be solid steel rods with chamfered heads and pointed tips, designed for use with steel forms. Rigid forms shall be provided for curb returns, except that benders of thin plank forms may be used for curb or curb returns with a radius of 10 feet or more, where grade changes occur in the return, or where the central angle is such that a rigid form with a central angle of 90 degrees cannot be used. Back forms for curb returns may be made of 1/2-inch benders, for the full height of the curb, cleated together. Curb forms shall be carefully set to alinement and grade and to conform to the dimensions of the curb. Forms shall be held rigidly in place by the use of stakes placed at intervals not to exceed 4 feet. Clamps, spreaders, and braces shall be used where required to insure ridigity in the forms. The forms on the front of the curb shall be removed not less than 2 hours not more than 6 hours after the concrete has been placed. Forms back of curb shall remain in place until the face and top of the curb have been finished as specified in paragraph: Finishing. Forms shall not be removed while the concrete is sufficiently plastic to slump in any direction. Forms shall be cleaned and coated with form oil each time before concrete is placed. Wood forms may, instead, be thoroughly wetted with water before concrete is placed, except that with probable freezing temperatures, oiling is mandatory.

8. CONCRETE PLACEMENT AND FINISHING.

8.1 Sidewalk Concrete. Concrete shall be placed in the forms in one layer of such thickness that when compacted and finished the sidewalk will be of the thickness indicated. After concrete has been placed in the forms, a strike-off guided by side forms shall be used to bring the surface to proper section to be compacted. The concrete shall be tamped and consolidated with a suitable wood or metal tamping bar, and the surface shall be finished to grade with a wood float. Finished surface of the walk shall not vary more than 3/16-inch from the testing edge of a 10 foot straightedge. Irregularities exceeding the above shall be satisfactorily corrected. The surface shall be divided into rectangular areas by means of contraction joints spaced at nor more than 5 feet on center.

8.1.1 Concrete Finishing. After straightedging, when most of the water sheen has disappeared, and just before the concrete hardens, the surface shall be finished to a smooth and uniformly fine granular or sandy texture, free of waves, irregularities, or tool marks. A scored surface shall be produced by brooming with a soft-bristled broom.

8.1.2 Edge and Joint Finishing. All slab edges, including those at formed joints, shall be finished carefully with an edger having a radius of 1/8 inch. When brooming is selected for the final surface finish, the transverse joints shall be edged before brooming, and the brooming hall eliminate the flat surface left by the surface face of the edger. Corners and edges which have crumbled and areas which lack sufficient mortar for proper finishing shall be cleaned and filled solidly with a properly proportioned mortar mixture and then finished.

8.1.3 Contraction Joints. The contraction joints shall be formed in the fresh concrete by cutting a groove in the top portion of the slab to a depth of at least 1/4 of the sidewalk slab thickness, using a jointer to cut the groove, or by sawing a groove in the hardened concrete with a power-driven saw in conformance with paragraph "Sawed Joints" below unless otherwise approved.

8.1.3.1 Sawed Joints. Sawed joints shall be constructed by sawing a groove in the concrete with a 1/8-inch blade to the depth indicated. The time of sawing shall be varied, depending on existing and anticipated weather conditions, and such sawing shall be at the required rate. An ample supply of saw blades shall be available on the job before concrete placement is started, and at least one standby sawing unit in good working order shall be available at the jobsite at all times during the sawing operations.

8.1.4 Expansion Joints. Transverse expansion joints shall be installed at sidewalk returns and opposite expansion joints in adjoining curbs. Where the sidewalk is not in contact with the curb, transverse expansion joints shall be installed as indicated. Transverse expansion joints shall be filled with 1/2-inch-thick joint filler strips. Joint filler shall be placed with top edge 1/4 inch below the surface and shall be held in place with steel pins or other devices to prevent warping of the filler during floating and finishing. Immediately after finishing operations are completed, joint edges shall be rounded with an edging tool having a radius of 1/8 inch, and concrete over the joint filler shall be removed. Expansion joints shall be formed about structures and features that project through or into the sidewalk pavement, using joint filler of the type, thickness, and width indicated. The filler shall be installed in such manner as to form a complete, uniform separation between the structure and sidewalk pavement. At the end of the curing period, expansion joints shall be carefully cleaned and filled with joint sealer. Concrete at the joint shall be surface dry, and the atmospheric and pavement temperatures shall be above 50 degrees F. at the time of application of joint-sealing materials. Joints shall be filled flush with the concrete surface in such manner as to minimize spilling on the walk surface. Spilled sealing material shall be removed immediately and the surface of the walk cleaned. Dummy groove joints shall not be sealed.

8.1.5 Surface Uniformity. The completed surface shall be uniform in color and free of surface blemishes and tool marks.

8.2 Curb Concrete. Concrete shall be placed in 6 inch layers in curb. Concrete shall be thoroughly consolidated by tamping and spading or with approved mechanical vibrators.

8.2.1 Concrete Finishing. The edges of the gutter and top of the curb shall be rounded with an edging tool to a radius of 1/2 inch and the surfaces shall be floated and finished with a smooth wood float until true to grade and section and uniform in texture. Floated surfaces shall then be brushed with a fine-hair brush with longitudinal

strokes. Immediately after removing the front curb form, the face of the curb shall be rubbed with a wood or concrete rubbing block and water until blemishes, form marks, and tool marks have been removed. The surface, while still wet, shall be brushed in the same manner as the gutter and curb top. The top surface of gutter and entrance shall be finished to grade with a wood float. Except at grade changes or curves, finished surfaces shall not vary, from the testing edge of a 10 foot straightedge, more than 1/8-inch for gutter and entrance and 1/4-inch for top and face of curb. Irregularities exceeding the above shall be satisfactorily corrected. Visible surfaces and edges of finished curb, gutter, entrance, and combination curb and gutter shall be free of blemishes and form and tool marks, and shall be uniform in color, shape, and appearance.

8.2.2 Joints. Expansion joints and contraction joints shall be constructed at right angles to the line of curb, gutter, entrance, and combination curb and gutter.

8.2.2.1 Contraction Joints. Contraction joints shall be constructed by means of 1/8-inch-thick separators, of a section conforming to the cross section of the curb, gutter, entrance, and combination curb and gutter. Contraction joints shall be constructed directly opposite contraction joints in abutting portland-cement-concrete pavement. Where curb, gutter, entrance, and combination curb and gutter do not abut portland-cement-concrete pavements, contraction joints shall be so placed that monolithic sections between curb returns will not be less than 5 feet nor greater than 15 feet in length. Separators shall be removed as soon as practicable after concrete has set sufficiently to preserve the width and shape of the joint. Separators shall be removed prior to finishing.

8.2.2.2 Expansion Joints. Expansion joints shall be formed by means of preformed expansion-joint filler material cut and shaped to the cross section of curb, gutter, entrance, and combination curb and gutter. Expansion joints shall be provided in curb at the end of all returns. Expansion joints shall be provided in curb, gutter, entrance, and combination curb and gutter directly opposite expansion joints of abutting portland-cement-concrete pavement and shall be of the same type and thickness as joints in the pavement. Where curb, gutter, entrance, and combination curb and gutter do not abut portland-cement-concrete pavement, expansion, joints at least 1/2-inch in width shall be provided at intervals not exceeding 120 feet. Expansion joints shall be provided in nonreinforced concrete gutter at locations indicated.

8.3 Curb-Forming Machines. Curb-forming machines for constructing curb and gutter will be approved based on trial use on the job. Use of the equipment shall be discontinued at any time during construction if the equipment produces unsatisfactory results, and the work shall be accomplished as specified above. Unsatisfactory work shall be removed and reconstructed for the full length between regularly schedule joints. Removed portions shall be disposed of as directed.

9. CURING AND PROTECTION.

9.1 Curing. Immediately after the finishing operations, exposed concrete surfaces shall be cured by one of the following methods as the Contractor may elect.

9.1.1 Mat Method. The entire exposed surface shall be covered with 2 or more layers of burlap. Mats shall overlap each other at least 6 inches. The mat shall be thoroughly wetted with water prior to placing on concrete surface and shall be kept continuously in a saturated condition and in intimate contact with concrete for not less than 7 days.

9.1.2 Impervious Sheeting Method. The entire exposed surface shall be wetted with a fine spray of water and then covered with impervious sheeting material. Sheets shall be laid directly on the concrete surface with the light-colored side up and overlapped 12 inches when a continuous sheet is not used. The curing medium shall not be less than 18 inches wider than the concrete surface to be cured, and shall be securely weighted down by heavy wood planks, or by placing a bank of moist earth along edges and laps in the sheets. Sheets shall be satisfactorily repaired or replaced if torn or otherwise damaged during curing. The curing medium shall remain on the concrete surface to be cured for not less than 7 days.

9.2 Backfilling. After curing, debris shall be removed, and the area adjoining the sidewalk shall be backfilled, graded, and compacted to conform to the surrounding area in accordance with lines and grades indicated.

9.3 Protection. The completed sidewalk shall be protected from damage until accepted. The Contractor shall repair damaged concrete and clean concrete discolored during construction. Sidewalk that is damaged shall be removed and reconstructed for the entire length between regularly scheduled joints. Refinishing the damaged portion will not be acceptable. Removed damaged portions shall be disposed of as directed.

10. FIELD-CONTROL TESTS. Preparation of field-control samples and testing thereof shall be accomplished by the Contractor at no additional cost to the Government. The taking of samples, the making of test specimens, and the testing thereof shall be performed under the supervision of the Contracting Officer.

* * * * *

SECTION 4N

BITUMINOUS WATERPROOFING

Index

1. Applicable Publications
2. General
3. Materials
4. Application
5. Protection

1. APPLICABLE PUBLICATIONS. The following publications of the issues listed below, but referred to thereafter by basic designation only, form a part of this specification to the extent indicated by the references thereto.

1.1 Federal Specifications (Fed. Spec.).

HH-I-526c	Insulation Board, Thermal (Mineral Fiber)
SS-C-153C	Cement, Bituminous, Plastic

1.2 American Society for Testing and Materials (ASTM), Publications.

C 208-72	Insulating Board (Cellulosic Fiber), Structural and Decorative
D 41-73	Primer for Use with Asphalt in Dampproofing and Waterproofing
D 43-73	Creosote for Priming Coat with Coal-Tar Pitch in Dampproofing and Waterproofing
D 173-74	Woven Cotton Fabrics Saturated with Bituminous Substances for Use in Waterproofing
D 226-75	Asphalt-Saturated Roofing Felt for Use in Membrane Waterproofing and Built-Up Roofings
D 227-56 (R 1970)	Coal-Tar Saturated Roofing Felt for Use in Waterproofing and in Constructing Built-Up Roofs
D 449-73	Asphalt for Damproofing and Waterproofing
D 450-71	Coal-Tar Pitch for Roofing, Damproofing and Waterproofing
D 1327-59 (R 1972)	Woven Burlap Fabrics Saturated with Bituminous Substances for Use in Waterproofing
D 1668-73	Woven Glass Fabrics Treated for Use in Waterproofing and Roofing

2. GENERAL. Waterproofing shall be installed where indicated. Waterproofing may be either asphalt or coal-tar and shall be applied when the ambient temperature is 40 degrees F or above. Materials shall be stored in an enclosed area free from contact with soil, weather, and an area maintained at not less than 50 degrees F for at least 24 hours before use. When waterproofing in an enclosed space, adequate ventilation shall be provided. Where pipes, conduit, or other items pass through the areas to be waterproofed and where floor drains occur in such areas, the waterproofing shall be installed after the flashing.

3. MATERIALS shall conform to the respective specifications and other requirements specified below. Materials shall be delivered to the site in sealed containers bearing the manufacturer's original labels.

3.1 Asphalt. ASTM D 449, Type B.

3.2 Asphalt Saturated Felt. ASTM D 226, Type I.

3.3 Coal-Tar Pitch. ASTM D 450, Type B.

3.4 Coal-Tar Saturated Felt. ASTM D 227, 36-inch width.

3.5 Fabric. ASTM D 173, ASTM D 1327, or ASTM D 1668.

3.6 Plastic Cement. Fed. Spec. SS-C-153, - Type I for asphalt, Type II for coal-tar pitch.

3.7 Primer. For asphalt - ASTM D 41; for coal-tar pitch - ASTM D 43.

3.8 Insulation Board. ASTM C 208, Class C, 1/2-inch thick, asphalt saturated or coated; Fed. Spec. HH-I-526, 7/16-inch thick, covered one side with an asphalt surfacing weighing not less than 4 ounces per square foot and faced with asphalt-saturated kraft paper; or prefabricated membrane board 1/8-inch thick, consisting of asphalt-saturated felt laminated under pressure to both sides of mineral filled asphalt core.

4. APPLICATION.

4.1 Inspection. Surfaces to be waterproofed shall be examined carefully for defects or conditions that will prevent a satisfactory application. Waterproofing work shall not start until corrections have been made. Particular attention shall be given to the following.

4.1.1 Surfaces shall be free of holes, joints, cracks and projections which would puncture the membrane. Holes, joints and cracks shall be pointed flush with mortar and projections shall be cut off or ground smooth.

4.1.2 Sleeves, metal flashings, floor drains, reglets and wood nailers shall be properly installed.

4.1.3 Surfaces to be waterproofed shall be smooth and swept thoroughly to remove dust, foreign matter and loose materials immediately before waterproofing is applied. Surfaces shall be thoroughly dry at time waterproofing is applied. All surfaces shall be inspected and approved before application of waterproofing.

4.2 Priming. Surfaces to be waterproofed shall be coated uniformly with primer at the rate of not less than one gallon per 100 square feet of surface. Primer shall be permitted to dry before bitumen is applied. Use ASTM D 41 for asphalt waterproofing and ASTM D 43 for coal-tar pitch waterproofing.

4.3 Membrane. Membrane shall be formed of either asphalt-saturated felt applied in solid moppings of hot asphalt or coal-tar pitch saturated felt applied in solid moppings of hot coal-tar pitch. The membrane shall be 5 plies and extent of membrane shall be as indicated.

4.4 Application of Membrane. Asphalt shall not be heated above 450 degrees F, nor coal-tar above 375 degrees F. Thermometers shall be used to check the temperatures at the kettle during the heating process to insure maximum temperature is not exceeded. Bitumen shall be applied uniformly at the rate for each ply of not less than 25 pounds per 100 square feet for asphalt and 30 pounds per 100 square feet for coal-tar pitch. Felt shall be rolled or pressed firmly into the hot bitumen to eliminate air pockets, wrinkles or similar deficiencies. Plies shall be applied shingle fashion and the felt shall be coated thoroughly. The entire top surface shall then be given a final mopping using not less than 70 pounds of pitch, or 60 pounds of asphalt for each 100 square feet of surface.

4.5 Fabric Reinforcing. Reinforcing consisting of 2 plies of fabric and moppings of bitumen shall be provided over the membrane at corners, angles, where the membrane passes through a wall, over construction joints, and points where the membrane may be subject to unusual stress. Where slabs abut walls, the first ply of reinforcing shall extend at least 6 inches on the slab and 8 inches on the wall. At vertical corners, the first ply extend at least 5 inches to each side of the corner. The second ply shall lap the first ply by at least 2 inches.

4.6 Clamping Devices. At floor drains and elsewhere as indicated, membrane shall be extended into clamping device, set in a heavy coating of plastic cement, and clamped securely.

4.7 Flashing. Flanges of flashing around penetrations and projections shall be coated with primer and permitted to dry. Flanges shall be stripped in with two fabric collars extending 4 and 6 inches, respectively, beyond the flanges and set in plastic cement. Flashing thus installed shall be lapped and mopped into the plies of the waterproofing to assure a waterproof joint.

4.8 Flood Test. Prior to concealment, waterproofing on floors over finished spaces shall be tested for watertightness. Drains shall be plugged and floors shall be flooded with 3 inches of water. Water shall be permitted to stand for 24 hours. If water level changes, leaks shall be located and repaired, and membrane shall be retested.

5. PROTECTION. Waterproofing against which backfill is to be placed shall be protected by a single thickness of insulation board. The insulation board shall be pressed into the final mopping while the mopping is still hot, with edges of boards brought into moderate contact and joints staggered. Where surfaced mineral-wood board is used, the surfaced side shall face outward. Boards shall be carefully and neatly fitted around pipes and projections and shall cover the entire surface of the waterproofing. Membranes not covered with insulating fiberboards shall be given temporary protection to prevent injury to the membrane due to subsequent building operations.

* * * * *

SECTION 5D

STONE PROTECTION

Index

1. Applicable Publications
2. Materials
3. Foundation Preparation
4. Placement
5. Scales
6. Waybills and Delivery Tickets

1. APPLICABLE PUBLICATIONS. The following American Society for Testing and Materials Standards of the issues listed below, but referred to thereafter by basic designation only, form a part of this specification to the extent indicated by the references thereto.

C 88-73	Soundness of Aggregates by Use of Sodium Sulfate or Magnesium Sulfate
C 127-73	Specific Gravity and Absorption of Coarse Aggregate
C 136-71	Sieve or Screen Analysis of Fine and Coarse Aggregates
C 131-69	Resistance to Abrasion of Small Size Coarse Aggregate by Use of the Los Angeles Machine
C 535-69 (R 1975)	Resistance to Abrasion of Large Size Coarse Aggregate by Use of the Los Angeles Machine
D 1141-52	Substitute Ocean Water

2. MATERIALS.

2.1 Source and Material Approval. The Contractor shall make all arrangements, pay all royalties, and secure all permits for the procurement, furnishing and transporting of materials. The source(s) from which the Contractor proposes to obtain the material shall be selected and a sample submitted a minimum of 45 days in advance of the time when the material will be required in the work. Stone from a proposed source where exploratory investigations and compliance test reports or satisfactory service records are not available, will be tested by the Government for quality compliance. The Government will test one sample at its expense. If the material fails the tests or if the Contractor desires to utilize more than one source, additional testing will be accomplished by the Government for the sum of $925.00 for each sample tested. The costs of such tests will be deducted from payment due the Contractor. All test samples (500 pounds minimum) shall be representative of the rock source and shall be obtained by the Contractor under the supervision of the Contracting Officer and delivered at the Contractor's expense to the South Pacific Division Laboratory, U.S. Army Engineer Division, South Pacific, Sausalito, California. A list of sources from which acceptable stone protection materials have been obtained is available for informational purposes in the office of the District Engineer, Foundations and Materials Branch, 300 North Los Angeles Street, Los Angeles, California. Sources listed may no longer be available due to depletion or may not be acceptable because of changes in the material. The Contractor shall vary the quarrying, processing, loading and placing operations to secure the type and quality of stone protection specified. If the stone being furnished by the Contractor does not fully meet all the requirements of these pecifications, the Contractor shall furnish at no additional cost to the Government, other stone meeting the requirements of these specifications. Approval of stone from a source shall not be construed as a waiver of the right of the Government to require the Contractor to furnish stone which complies with these specifications. Materials produced from localized areas, zones or strata will be rejected when such materials do not comply with the specifications.

2.2 Quality Compliance. Test results and service records may be used to determine the acceptability of the stone protection materials. In the event compliance test reports and/or service records are not available, the material shall be subjected to the tests outlined in these specifications to determine its acceptability for use in the work. Before a proposed new source of stone will be considered for sampling and testing, one of the following criteria must be met:

a. A sufficiently developed quarry operation to demonstrate that an adequate quantity of stone is available to fulfill the contract requirements; or,

b. An exposed face plus sufficient explorations (results of which are made available to the Government) to demonstrate that an adequate quantity of stone is available to fullfill the contract requirements.

2.3 Quality Compliance Tests for Stone Protection. Stone shall meet the following test requirements.

Test	Test Method	Requirement
Specific Gravity (Bulk SSD)	ASTM C 127	2.50 minimun
Absorption	ASTM C 127	2.0% maximum
Wetting & Drying	SPD Test Procedure(1)	No fracturing(3)
Sodium Sulfate	ASTM C 88(2)	10% max. loss(4)
Abrasion Loss	ASTM C 535	50% max. loss

In addition to the above tests, the stone shall be subjected to a petrographic and X-ray diffraction analysis. The stone must not contain any swelling type clay (illite or montmorillonite).

NOTE: (1): Test procedure wetting-and-drying tests. The initial step of the test is the careful examination of the entire sample and the selection of representative test specimens. The piece should be large enough to produce two cut slabs, 1 inch thick (± 1/4 inch) with a minimum surface area of 30 square inches on one side. Two chunks approximately three by four inches are also chosen. The slabs and chunks are carefully examined under a low-power microscope and all visible surface features are noted and recorded. The specimens are then oven dried at 140 degrees F., for eight hours, cooled and weighed to the nearest tenth of a gram. The test specimens are photographed to show all surface features before the test. The chunks and slabs are then subjected to fifteen cycles of wetting and drying. One slab and one chunk are soaked in fresh tap water, the other slab and chunk are soaked in salt water prepared in accordance with ASTM D1141. Each cycle consists of soaking for sixteen hours at room temperature and then drying in an oven for eight hours at 140 degrees F. After each cycle the specimens are examined with the low-power microscope to check for opening or movement of fractures, flaking along edges, swelling of clays, softening or rock surface, heaving of micaceous minerals, breakdown of matrix material and any other evidence of weakness developing in the rock. The cycle in which any of these actions occurs is recorded. After fifteen cycles, the slabs and chunks are again carefully examined and all changes in the rocks are noted and recorded. The test specimens together with all flakes or particles which come off during the test are oven dried, weighed and photographed.

NOTE: (2): The test shall be made on 50 particles each weighing 100 grams, ± 20 grams, in lieu of the gradation given in C 88.

NOTE: (3): Weakening and loss of individual surface particles is permissible unless bond of the surface grains softens and causes general disintegration of the surface material.

NOTE: (4): Sandstones which have a loss greater than the specified limit will be accepted if the Contractor demonstrates that the rock has a satisfactory service record.

2.4 Gradation Sampling and Testing for Stone Protection. Test shall be performed by an approved testing laboratory on samples selected by the Contracting Officer. The Government reserves the right to perform check tests and to use the Contractor's sampling and testing facilities to make the tests. Each sample shall consist of not less than five tons of materials and shall be selected at random from the production run. One gradation test is required at the beginning of production prior to delivery of stone to the project and a minimum of one additional test for each (10,000) tons of material placed. All sampling and gradation tests performed by the Contractor shall be under the supervision of the Contracting Officer.

2.5 Gradation.

2.5.1 General. All points on individual grading curves shall be between the boundary limits as defined by smooth curves drawn through specified grading limits plotted on a mechanical analysis diagram. The individual grading curves shall not exhibit abrupt changes in slope denoting skip grading or scalping of certain sizes. Specified grading of all material shall be met both at the source and as delivered to the project. In addition, material not meeting the required grading due to segregation or degradation during placement shall be rejected. If best results show that stone does not meet the required grading, the hauling operation will be stopped immediately and will not resume until processing procedures are adjusted and a gradation test is completed showing gradation requirements are met. All gradation tests shall be at the expense of the Contractor.

2.5.2 Stone shall be reasonably well graded within the limits specified below:

(Pounds)	(by Weight)
175	100
75	60-100
35	25-50
20	0-35
10	0-15

3. FOUNDATION PREPARATION. Areas on which stone is to be placed shall be trimed and dressed to conform to cross sections indicated or directed, within an allowable tolerance of plus or minus one inch from the theoretical slope lines and grades. Where such areas are below the allowable minus tolerance limit they shall be brought to grade by filling with earth similar to the adjacent material and well compacted, or by filling with approved material, and no additional payment will be made for any material thus required. Immediately prior to placing the stone, the prepared base shall be inspected by the Contracting Officer and no material shall be placed thereon until that area has been approved.

4. PLACEMENT.

4.1 Stone shall be placed in a manner to produce a reasonably well graded mass with the minimum practicable percentage of voids, and shall be constructed to the lines and grades indicated or directed. Stone shall be placed to its full course thickness in one operation and in a manner to avoid displacing the underlying material. Method of placement shall be submitted to Contracting Officer for approval prior to commencement of placement operations. The Contractor shall maintain the stone protection until accepted and any material displaced by any cause shall be replaced at his expense to the lines and grades shown on the drawings. Self propelled equipment shall not be used on the levee slopes and/or toe slopes. Hand placing, barring, or placing by crane will be required only to the extent necessary to secure the results specified. Placing stone by dumping into chutes or by similar methods likely to cause segregation will not be permitted. A tolerance of plus 3 inches and minus 0 inches from the indicated slope lines and grades will be allowed in the finished surface, except that either extreme of such tolerance shall not be continuous over an area greater than 200 square feet.

5. SCALES shall be standard truck scales of the beam type. The scales shall be of sufficient size and capacity to accommodate all trucks used in hauling the material. Scales shall be tested, approved, and sealed by an inspector of the State Inspection Bureau charged with scales inspection within the state in which the project is located. Scales shall be calibrated and resealed as often as necessary to insure continuous accuracy. The necessary number of standard weights for testing the scales shall be on hand at all times and, if an official inspection bureau of the state is not available, the scales will be tested by the Contracting Officer.

6. WAYBILLS AND DELIVERY TICKETS. Copies of waybills or delivery tickets shall be submitted to the Contracting Officer during the progress of the work. Before the final statement is allowed, the Contractor shall file with the Contracting Officer certified waybills and/or certified delivery tickets for all stone actually used in the construction covered by the contract.

* * * * *

SECTION 6A

MISCELLANEOUS METAL

Index

1. Applicable Publications
2. General
3. Dissimilar Materials
4. Materials
5. Shop Drawings
6. Samples
7. Workmanship
8. Qualification of Welders
9. Anchorage
10. Access Doors and Access Panels
11. Handrails
12. Mirror Frames
13. Miscellaneous Plates and Shapes
14. Shop Painting

1. APPLICABLE PUBLICATIONS. The following publications of the issues listed below, but referred to thereafter by basic designation only, form a part of this specification to the extent indicated by the references thereto.

1.1 Federal Specifications.

FF-B-588C & Am-1	Bolt, Toggle: and Expansion Sleeve Screw
FF-H-00111b (GSA-FSS)	Hardware, Builders'; Shelf and Miscellaneous
FF-S-85C & Am-1	Screw, Cap, Slotted and Hexagon Head
FF-S-92B & Am-1	Screw, Machine: Slotted, Cross-Recessed or Hexagon Head
FF-S-111D	Screw, Wood
FF-S-325 & Int. Am-3 (GSA-FSS)	Shield, Expansion; Nail Expansion; and Nail, Drive Screw (Devices, Anchoring, Masonry)
FF-W-84a & Am-2	Washers, Lock (Spring)
RR-G-661C	Grating, Metal, Bar Type (Floor, Except for Naval Vessels)
TT-V-51F	Varnish: Asphalt

1.2 Military Specifications.

MIL-M-17194C & Am-2	Metal, Expanded, Steel
MIL-C-18480A (DOCKS) & Am-3	Coating Compound, Bituminous, Solvent; Coal Tar Base

1.3 American National Standards Insitute, Inc. (ANSI) Standard.

A14.3-74	Safety Requirements for Fixed Ladders

1.4 American Society for Testing and Materials (ASTM) Standards.

A 36-75	Structural Steel
A 48-74	Gray Iron Castings
A 53-73	Welded and Seamless Steel Pipe

A 123-73	Zinc (Hot-Galvanized) Coatings on Products Fabricated from Rolled, Pressed, and Forged Steel Shapes, Plates, Bars, and Strip
A 163-66	Zinc-Coated (Galvanized) Wrought Iron Sheets
A 386-73	Zinc-Coating (Hot-Dip) on Assembled Steel Products
A 475-72a	Zinc-Coated Steel Wire Strand
A 525-73	Steel Sheet, Zinc-Coated (Galvanized) by the Hot-Dip Process, General Requirements

1.5 American Welding Society (AWS) Standards.

B3.0-41	Qualification Procedure (Reprint April 1969)
D1.1-72 & Errata, Oct 1972; Rev 1-73 and 2-74 with Errata Jul 1974	Structural Welding Code

2. GENERAL. The Contractor shall verify all measurements and shall take all field measurements necessary before fabrication. Welding to or on structural steel shall be in accordance with the Structural Welding Code of the American Welding Society. Items specified to be galvanized, when practicable and not indicated otherwise, shall be hot-dip processed after fabrication. Galvanizing shall be in accordance with ASTM Specification A 123, A 163, A 386, or A 525, as applicable. Exposed fastenings shall be compatibe materials, shall generally match in color and finish, and shall harmonize with the material to which fastenings are applied. Materials and parts necessary to complete each item, even though such work is not definitely shown or specified, shall be included. Miscellaneous bolts and anchors, supports, braces, and connections necessary for completion of the miscellaneous metalwork shall be provided. The necessary rebates, lugs, and brackets shall be provided so that the work can be assembled in a neat and substantial manner. Holes for bolts and screws shall be drilled or punched. Poor matching of holes shall be cause for rejection. Fastenings shall be concealed where practicable. Thickness of metal and details of assembly and supports shall give ample strength and stiffness. Joints exposed to the weather shall be formed to exclude water.

3. DISSIMILAR MATERIALS. Where dissimilar metals are in contact, or where aluminum is in contact with concrete, mortar, masonry, wet or pressure-treated wood, or absorptive materials subject to wetting, the surfaces shall be protected with a coat of bituminous paint conforming to Military Specification MIL-C-18480 or to Federal Specification TT-V-51, unless otherwise specified, to prevent galvanic or corrosive action.

4. MATERIALS shall conform to the requirements specified for the particular item; and where these requirements are not specified in detail, the materials shall be suitable for the intended usage of the item. The materials listed below shall conform to the respective specifications and other requirements as designated below.

4.1 Aluminum. Unless otherwise specified, aluminum items shall be in standard mill finish. When anodic coatings are specified hereinafter, the coatings shall conform to The Aluminum Association Publication Standards for Anodized Architectural Aluminum, with treatment to a coating thickness not less than that specified in The Aluminum Association Publication Designation System for Aluminum Finishes for the protective and decorative type finish (for items used in interior locations and architectural class I type finish for items used in exterior locations). Items to be anodized shall receive a polished-satin-finish pretreatment and a clear-lacquer overcoating conforming to the Standards for Anodized Architectural Aluminum.

4.2 Anchors.

4.2.1 Expansion Shields. Federal Specification FF-S-325.

4.2.2 Toggle Bolts. Federal Specification FF-B-588.

4.3 Expanded metal shall conform to Military Specification MIL-M-17194, type II, class 1 or class 2.

4.4 Fasteners.

4.4.1 Bolts and Nuts shall be suitable for use intended.

4.4.2 Powder-Driven Fasteners may be used only when approved in writing.

4.4.3 Screws. Federal Specification FF-S-85, FF-S-92, and FF-S-111, as best suited for use intended.

4.4.4 Washers. Federal Specification FF-W-84 for lock washers. Flat washers shall be suitable for use intended.

4.5 Hardware. Unless otherwise specified, hardware provided as an integral part of miscellaneous metal items shall conform to Federal Specification FF-H-111.

5. SHOP DRAWINGS, along with catalog cuts, templates, and erection and installation details, as appropriate, for all miscellaneous metal items shall be submitted for approval in accordance with the SPECIAL PROVISIONS. Submittals shall be complete in detail; shall indicate thickness, type, grade, class of metal, and dimensions; and shall show construction details, reinforcement, anchorage, and installation with relation to the building construction.

6. SAMPLES shall be full size, shall be taken from manufacturer's stock, and shall be complete as required for installation in the structure. After approval, samples may be installed in the work, provided each sample is clearly identified and its location recorded. One sample of any item shall be submitted for approval upon request by the Contracting Officer.

7. WORKMANSHIP. Miscellaneous metalwork shall be well formed to shape and size, with sharp lines and angles and true curves. Drilling and punching shall produce clean true lines and surfaces. Welding shall be continuous along the entire area of contact except where tack welding is permitted. Exposed connections of work in place shall not be tack welded. Exposed welds shall be ground smooth. Exposed surfaces of work in place shall have a smooth finish, and unless otherwise approved, exposed riveting shall be flush. Where tight fits are required, joints shall be milled to a close fit. Corner joints shall be coped or mitered, well formed, and in true alinement. Work shall be accurately set to established lines and elevations and securely fastened in place. Work shall be executed and finished in accordance with approved drawings, cuts, details, and samples.

8. QUALIFICATION OF WELDERS. Welding to or on structural steel or miscellaneous items of structural steel such as lintels and ladders shall be performed by certified welders and qualified in accordance with procedures covered in American Welding Society Standard B3.0 using procedures and materials and equipment of the type required for the work.

9. ANCHORAGE shall be provided where necessary for fastening miscellaneous metal items securely in place. Anchorage not otherwise specified or indicated shall include slotted inserts, expansion shields, and powder-driven fasteners when approved for concrete; toggle bolts and through bolts for masonry; machine and carriage bolts for steel; through bolts, lag bolts, and screws for wood. Slotted inserts shall be of types required to engage with the anchors and shall be approved.

10. ACCESS DOORS AND ACCESS PANELS shall be flush type unless otherwise indicated. Frames for access doors shall be fabricated of not lighter than 16-gage steel with welded joints and anchorage for securing into construction. Access doors shall be a minimum of 14 by 20 inches and of not lighter than 14-gage steel, with stiffened edges and welded attachments. Access doors shall be hinged to frame and provided with a flush-face turn-screw-operated latch. A removable access panel not less than 12 by 12 inches shall be installed directly below each valve, flow indicator, damper, or air splitter that is located above the ceiling, other than an acoustical ceiling, and that would otherwise not be accessible.

11. HANDRAILS.

11.1 Steel railings shall be of the type, size and shape indicated. Steel shall conform to ASTM A 500, or A 501 as applicable and shall be hot dip galvanized.

11.2 Welded Joints shall be finished flush and ground smooth. Railing splices shall be butted and reinforced by a tight-fitting interior sleeve not less than 6 inches long.

11.3 Installation.

11.3.1 In Concrete. Posts shall be inserted into sleeves leveled, plumbed and alined. The annular space between pipe posts and sleeves shall be filled solid with quick-setting hydraulic cement.

12. MIRROR FRAMES for plate-glass mirrors larger than 18 by 30 inches shall be fabricated from extruded aluminum with anodized finish. Frames shall be provided with concealed fittings and tamperproof mountings.

13. MISCELLANEOUS PLATES AND SHAPES for items that do not form a part of the structural steel framework, such as lintels, sill angles, miscellaneous mountings, and frames, shall be provided to complete the work. Miscellaneous plates and shapes shall conform to ASTM Specification A 36.

14. SHOP PAINTING. Unless otherwise specified, surfaces of ferrous metal, except galvanized surfaces, shall be cleaned and shop coated with the manufacturer's standard protective coating. Items to be finish painted shall not be given a bituminous protective coating. Surfaces shall be cleaned with solvents to remove grease and oil and with power wire-brushing or sandblasting to remove loose rust, loose mill scale, and other foreign substances. Surfaces of items embedded in concrete shall not be painted. Bituminous primer shall conform to Federal Specification TT-V-51 or to Military Specification MIL-C-18480.

* * * * *

SECTION 6B

STRUCTURAL STEEL

Index

1. Applicable Publications
2. General
3. Materials
4. Fabrication
5. Erection

1. APPLICABLE PUBLICATIONS. The following publications of the issues listed below, but referred to thereafter by basic designation only, form a part of this specification to the extent indicated by the references thereto.

1.1 Federal Specifications (Fed. Spec.).

TT-P-57b & Am-1	Paint, Zinc Yellow-Iron Oxide-Base Ready-Mixed
TT-P-86G	Paint, Red-Lead-Base, Ready-Mixed
TT-P-615d & Am-3	Primer Coating: Basic Lead Silico Chromate, Ready Mixed
TT-P-645	Primer, Paint, Zinc-Chromate, Alkyd Type

1.2 American Institute of Steel Construction (AISC) Publication.

Specification for the Design, Fabrication & Erection of Structural Steel for Buildings (Feb 12, 1969). With Commentary, Suppl. No. 1 (Nov 1, 1970), Suppl. No. 2 (Dec 8, 1971), Suppl. No. 3 (Jun 12, 1974).

1.3 American National Standards Institute (ANSI) Standard.

B27.2.1965	Plain Washers

1.4 American Society for Testing and Materials (ASTM) Specifications.

A 36-75	Structural Steel
A 53-75	Welded and Seamless Steel Pipe
A 242-75	High-Strength Low-Alloy Structural Steel
A 307-74	Carbon Steel Externally and Internally Threaded Standard Fasteners
A 500-74a	Cold-Formed Welded and Seamless Carbon Steel Structural Tubing in Rounds and Shapes

1.5 American Welding Society (AWS) Publication.

D1.1-75	Structural Welding Code

2. GENERAL. The AISC Specification for the Design, Fabrication & Erection of Structural Steel for Buildings shall govern the work. Welding shall be in accordance with AWS Code D1.1

2.1 Shop Drawings shall be submitted for approval in accordance with the SPECIAL PROVISIONS. Drawings shall include all shop and erection details, and members and connections for any portion of the structure not shown on the contract drawings shall be detailed by the fabricator and indicated on the shop drawings. All welds shall be indicated by standard welding symbols of the AWS.

2.2 Certification. Certified copies of mill test reports including names and locations of mills and shops, shall be furnished for all structural steel in accordance with the SPECIAL PROVISIONS.

2.3 Responsibility for Errors. The Contractor shall be responsible for all errors of detailing, fabrication, and for the correct fitting of the structural members.

2.4 Qualification of Welders. Certification that each welder is qualified in accordance with AWS Code D1.1 shall be provided. Any welder shall be retested and recertified when the work of the welder creates a reasonable doubt as to his proficiency. Tests, when required, shall be conducted at no additional expense to the Government. Recertification of the welder shall be submitted only after the welder has taken and passed the required retest.

2.5 Storage of Materials. Material shall be stored out of contact with the ground in such manner and location as will minimize contamination and deterioration.

3. MATERIALS shall conform to the respective specifications and other requirements specified below.

3.1 Structural Steel. ASTM Specification A 36.

3.2 Structural Tubing. ASTM Specification A 500.

3.3 Steel Pipe. ASTM Specification A 53, Type S, grade B.

3.4 Paint. Fed. Spec. TT-P-57, type I; TT-P-86, type I or II; TT-P-615, type I, II, or V; or TT-P-645.

3.5 Bolts, Nuts and Washers.

3.5.1 Bolts and Nuts, Other Than High-strength. ASTM Specification A 307, grade A.

3.5.2 Plain Washers, Other Than Those in Contact with High-Strength Bolt Heads and Nuts. ANSI Standard B27.2, type B.

4. FABRICATION. Structural steelwork material shall be in accordance with the applicable provisions of the AISC Specification. Fabrication and assembly shall be done in the shop to the greatest extent possible. Structural steelwork, except surfaces of steel to be encased in concrete, and surfaces to be field welded, shall be prepared for painting in accordance with the AISC Specification and primed with paint materials hereinbefore listed.

5. ERECTION. The erection of structural steel shall be in accordance with the applicable provisions of the AISC Specification.

5.1 Connections. Anchor bolts and other connections between the structural steel and foundations shall be provided and shall be properly located and built into connecting work.

5.2 Base Plates and Bearing Plates. Column base plates for columns and bearing plates for beams, girders, and similar members shall be provided. Base plates and bearing plates shall be provided with full bearing after the supported members have been plumbed and properly positioned. Separate setting plates under column base plates will not be permitted. The area under the plate shall be dry-packed solidly with bedding mortar as specified in section: CONCRETE.

5.3 Field Priming. After erection, the field bolt heads and nuts, field welds, and any abrasions in the shop coat shall be cleaned and primed with paint of the same quality as that used for the shop coat.

* * * * *

SECTION 6C

CASEWORK

1. APPLICABLE PUBLICATIONS. The following publications of the issues listed below, but referred to thereafter by basic designation only, form a part of this specification to the extent indicated by the references thereto.

1.1 Architectural Woodwork Institute (AWI), Publication.

Manual of Architectural Woodwork, 1968 Edition.

1.2 National Electrical Manufacturer's Association (NEMA), Standard.

LD 3-1975 High-Pressure Decorative Laminates

2. GENERAL. Work shall conform to AWI Manual of Architectural Woodwork. Grade, species, type of door and drawer construction, top material, and finish shall be as indicated.

2.1 Shelves, where indicated, shall be adjustable.

2.2 Laminated Plastic Work.

2.2.1 Tops shall have self edge. Back splash shall be square butt with end splash, height as shown. Color shall be as indicated in color schedule on drawings.

3. MATERIALS.

3.1 Conventional Wood Casework as indicated on drawings. Exposed areas shall be select birch, counter tops plastic, drawers and vertical stile plastic face, adjustable shelves plywood with hardwood edge band, finish shall be transparent.

3.2 Plastic Covered Casework (no face frame construction) where shown. WIC grade custom, plastic shall be satin finish, all exposed face, back and ends of cabinet including counter top shall be plastic.

4. HARDWARE FINISH. Hinges and pulls shall be provided with a US 26D finish.

5. SHOP DRAWINGS and catalog cuts shall be submitted to the Contracting Officer for approval in accordance with the SPECIAL PROVISIONS. Drawings shall clearly indicate the complete layout of cabinets, accessories, and pertinent details of construction, fabrication, and attachments. Materials shall not be delivered to the site prior to the receipt of the approved shop drawings from the Contracting Officer.

6. SAMPLES to be submitted simultaneously with the shop drawings shall include:

Laminated Plastic: Manufacturer's standard chit.
Hinges, pulls and catches: One each.

7. PAINTING. At the option of the Contractor, cabinets may be factory finished or field finished in conformance to requirements of section: PAINTING, GENERAL.

8. INSTALLATION. Cabinets shall be installed level, plumb and true to line and shall be attached to the walls or floors with devices as appropriate for type of construction. Counter tops, accessories, and hardware shall be installed where indicated. Closer and filler strips and finish moldings shall be provided as required. Prior to final acceptance, the Contractor shall aline all doors (flush type), adjust all hardware, and clean all finished surfaces.

* * * * *

SECTION 6D

FENCES

Index

1. Applicable Publications
2. Materials
3. Installation of Fence
4. Temporary Fence

1. APPLICABLE PUBLICATIONS. The following publications of the issues listed below, but referred to thereafter by basic designation only, form a part of this specification to the extent indicated by the references thereto.

1.1 Federal Specifications.

RR-F-191G/GEN.	Fencing, Wire and Post, Metal (and Gates, Chain-Link Fabric, and Accessories)
RR-W-410C	Wire Rope and Strand

1.2 American Society for Testing and Materials (ASTM) Standards.

B 32-70	Solder Metal
C 94-74a	Ready-Mixed Concrete

2. MATERIALS shall conform to Fed. Spec. RR-F-191G/GEN and other requirements specified below.

2.1 Chain-Link Fabric. Fed. Spec. RR-F-191, type 1, 2 oz. coating Type V, dark green and shall be 9 gage wire woven in a 2-inch mesh.

2.2 Concrete. ASTM C 94, using 3/4-inch maximum size aggregate, and having minimum compressive strength of 3,000 p.s.i. at 28 days. Grout shall consist of one part portland cement to 3 parts clean, well-graded sand and the minimum amount of water to produce a workable mix.

2.3 Accessories for Chain-Link Fences. Fed. Spec. RR-F-191, zinc-coated, except as modified herein.

2.3.1 Gates. Gate leaves more than 8 feet wide shall have either intermediate members and diagonal truss rods or shall have tubular members as necessary to provide rigid construction, free from sag or twist. Gates less than 8 feet wide shall have truss rods or intermediate braces. Gate fabric shall be attached to the gate frame by method standard with the manufacturer except that welding will not be permitted. Latches shall be arranged for padlocking so that padlock will be accessible from both sides of the gate regardless of the latching arrangement. All gate hinges shall be the non-removable bolt-pin type.

2.3.1.1 Sliding Gates shall be the type II, cantilever slide gate with frame sizes indicated. Gate accessories shall include heavy duty pipe roller track, ball bearing V-groove rollers and solid rubber tired ball bearing wheels on latch end of gate. Fabric height and wire gage shall match the adjacent fence materials. Bracing and other accessories shall conform to the requirements for type I and III swing gates.

2.3.1.2 Roto-Gates shall be the free standing turnstile, pedestrian traffic control type as indicated. Gate shall automatically control one way traffic with a manual safety release. Gate shall be fabricated with welded steel components and stainless steel foot guards. Welds shall be ground smooth. The gates shall be weatherproof and finished with the manufacturer's standard corrosion resistant finish. The roto shaft bearings shall be roller or ball type.

2.3.2 Reinforcing Wire. Minimum tensile strength of 80,000 pounds per square inch, zinc-coated for use with zinc coated fabric.

2.3.3 Tie Wire. Aluminum alloy of 0.144-inch diameter for attaching fabric to top rail and to intermediate posts. Preformed clips of 6-gage zinc-coated steel wire may be used for attaching fabric to intermediate posts.

2.3.4 Hog Rings. Aluminum wire of 0.110-inch diameter for attaching fabric to top and bottom reinforcing wires.

2.3.5 Post Braces and Truss Rods. For each gate, corner, pull, or end post. Truss rods shall be provided with turnbuckles or other equivalent provisions for adjustment.

2.3.6 Post, Rails, and Braces. The posts, rails, and braces, shall be either round or H-Section; however, the same type shall be used throughout the project.

2.4 Temporary Fence. The fabric may be new or used chain link fencing. The fabric shall have a width of not less than 48 inches.

3. INSTALLATION OF FENCE.

3.1 General. The fence shall be installed to the alinement indicated. Fence installation shall be in accordance with the fence manufacturer's written installation instructions except as indicated and modified herein.

3.2 Excavation shall be of the dimensions indicated except in bedrock. If bedrock is encountered before reaching the required depth, the excavation shall be continued to the depth indicated or 18 inches into the bedrock, whichever is less, and shall be a minimum of 2 inches larger than the outside diameter of the post. Post hole shall be cleared of loose material. Waste material shall be spread where directed.

3.3 Post Setting. Posts shall be set plumb and in alinement. Posts shall be set in concrete bases of dimensions indicated except where posts are set in preformed holes or in holes excavated in bedrock. Concrete shall be thoroughly compacted so as to be free of voids and finished in a dome. Braced pull posts shall be installed at fence ends, intersections, each change in direction of 10 degrees or more horizontally, and at each grade change of 5 degrees or more. In addition, straight runs between braced pull posts shall not exceed 500 feet. In bedrock and in preformed holes, posts shall be set with a minimum of 1 inch of grout around each post. Grout shall be thoroughly worked into the hole so as to be free of voids and finished in a dome. Concrete and grout shall be cured a minimum of 72 hours before any further work is done on the posts.

3.4 Post Caps shall be installed as recommended by the manufacturer. Post caps shall be of the design as required to accommodate the top rail.

3.5 Top Rails. Top rail shall be installed before installing chain-link fabric and shall pass through intermediate post caps. The top rail shall have expansion couplings spaced as indicated.

3.6 Bottom Reinforcing Wires shall be installed before installing chain-link fabric and shall be pulled taut.

3.7 Fabric shall be pulled taut and secured to the top rail and bottom wire close to both sides of each post and at intervals of not more than 24 inches on centers. Fabric shall be attached to the sides of the post away from the enclosed opening. Fabric shall be secured to braced pull posts using stretcher bars and ties or clips or by integrally weaving to integral fastening loops of ends, corner, pull, and gate posts for the full length of each post. Fabric shall be attached to line posts at not greater than 15 inches on center using ties or clips. Splices in fabric shall be made with suitable splicing wire. Edges of fabric made by field tests shall be knuckled.

3.8 Gates shall be installed as indicated. Hinge bolts shall be installed in drilled holes in the gate posts. Bolts and nuts shall be tack welded to gate posts.

3.9 Repair. In the event that any portion of galvanized items is abraded or otherwise damaged to the extent that the base metal is exposed, such damaged or abraded portions shall be neatly covered with Grade 50B solder conforming to the requirements of ASTM B 32.

4. TEMPORARY FENCE shall be installed in locations required for safety and Contractors storage area. Upon completion of the work, the fence materials shall become the property of the Contractor and shall be removed from the site.

* * * * *

SECTION 8A

STORM-DRAINAGE SYSTEM

Index

1. Applicable Publications
2. Delivery, Storage, and Handling of Materials
3. Submittals
4. Pipe for Culverts and Storm Drains
5. Drainage Structures
6. Materials for Drainage Structures
7. Joints
8. Excavation and Trenching for Pipe Culverts and Storm Drains and Drainage Structures
9. Bedding
10. Placing Pipe
11. Backfilling
12. Hydrostatic Test on Watertight Joints

1. APPLICABLE PUBLICATIONS. The following publications of the issues listed below, but referred to thereafter by basic designation only, form a part of this specification to the extent indicated by the references thereto.

1.1 Federal Specifications (Fed. Spec.).

RR-F-621	Frames, Covers, Gratings, Steps, Sump and Catch Basins, Manhole
SS-S-210A & Am-1 (GSA-FSS)	Sealing Compound, Preformed Plastic, for Expansion Joints and Pipe Joints

1.2 Federal Standard (Fed. Std.).

1.2A Military Standard (Mil. Std.).

MIL-STD-621A & Notices 1 & 2	Test Method for Pavement Subgrade, Subbase, and Base-Course Materials

1.3 American Association of State Highway and Transportation Officials (AASHTO) Publications.

M 33-70	Preformed Expansion Joint Filler for Concrete (Bituminous Type)
M 198-75I	Joints for Circular Concrete Sewer and Culvert Pipe Using Flexible Watertight Gaskets
T 180-74	Moisture-Density Relations of Soils Using a 10-lb (4.5 kg) Rammer and an 18-in (457 mm) Drop

1.4 American Society for Testing and Materials (ASTM) Publications.

A 220-76	Pearlitic Malleable Iron Castings
C 76-75	Reinforced Concrete Culvert, Storm Drain and Sewer Pipe
C 231-75	Air Content of Freshly Mixed Concrete by the Pressure Method
C 270-73	Mortar for Unit Masonry
C 425-75	Compression Joints for Vitrified Pipe and Fittings
C 443-72A	Joints for Circular Concrete Sewer and Culvert Pipe, Using Rubber Gaskets.
C 663-73A	Asbestos-Cement Storm Drain Pipe

C 700-75	Vitrified Clay Pipe, Extra Strength, Standard Strength, and Perforated
D 1751-73	Preformed Expansion Joint Fillers for Concrete Paving and Structural Construction (Nonextruding and Resilient Bituminous Types)
D 1752-67 (1973)	Preformed Sponge Rubber and Cork Expansion Joint Fillers for Concrete Paving and Structural Construction
D 1869-66 (1972)	Rubber Rings for Asbestos-Cement Pipe

2. DELIVERY, STORAGE, AND HANDLING OF MATERIALS:

2.1 Delivery and Storage. Materials delivered to site shall be inspected for damage, unloaded, and stored with the minimum of handling. Do not store materials directly on the ground. Inside of pipes and fittings shall be kept free of dirt and debris.

2.2 Handling. Materials shall be handled in such a manner as to insure delivery to the trench in sound undamaged condition. Pipe shall be carried to the trench not dragged. Gasket materials and plastic materials that are not to be installed immediately shall not be stored in the direct sunlight.

3. SUBMITTALS.

3.1 Manufacturers Recommendations. Where installation procedures or any part thereof are required to be in accordance with the recommendations of the manufacturer of the material being installed, printed copies of these recommendations shall be furnished to the Contracting Officer prior to installation. Installation of the item will not be allowed until the recommendations are received. Failure to furnish these recommendations can be cause for rejection of the material.

4. PIPE FOR CULVERTS AND STORM DRAINS shall be as indicated and shall conform to requirements for the following pertinent types.

4.1 Reinforced Concrete Pipe. ASTM C 76, Class III, Type II cement.

4.2 Clay Pipe. Clay Pipe shall be extra strength, as indicated, conforming to ASTM C 700.

4.3 Asbestos-Cement Pipe and Couplings. Type II conforming to ASTM C 663, Class III.

5. DRAINAGE STRUCTURES.

5.1 Manholes and Inlets. Construction shall be of reinforced concrete, complete with gratings where indicated.

5.2 Walls and Headwalls. Construction shall be of reinforced concrete, plain concrete, masonry, or steel sheeting as indicated.

5.3 Flared End Sections. Sections shall be of a standard design with pipe manufacturer and manufactured of the same material as specified for the pipe.

6. MATERIALS FOR DRAINAGE STRUCTURES.

6.1 Concrete. Unless otherwise specified, concrete and reinforced concrete shall conform to the requirements of Class A concrete under section: CONCRETE. The concrete mixture shall have air content by volume of concrete, based on measurements made immediately after discharge from the mixer, of 5 to 7 percent when maximum size of coarse aggregate exceeds 1-1/2 inches. Air content shall be determined in accordance with ASTM C 231. The concrete covering over steel reinforcing shall be not less than one inch thick for covers and not less than 1-1/2 inches thick for walls and flooring. Concrete covering deposited directly against the ground shall have a thickness of at least 3 inches between steel and ground. Expansion-joint filler material shall conform to ASTM D 1751, D 1752, or AASHTO M 33 or shall be resin impregnated fiberboard conforming to the physical requirements of ASTM D 1752.

6.2 Mortar. Mortar for pipe joints, connections to other drainage structures, and brick or block construction shall conform to ASTM C 270, Type M, except the maximum placement time shall be one hour.

6.2.1 The quantity of water in the mixture shall be sufficient to produce a stiff workable mortar but in no case shall exceed 5 gallons of water per sack of cement. Water shall be clean and free of harmful acids, alkalies, and organic impurities. The mortar shall be used within 30 minutes after the ingredients are mixed with water.

6.2.2 The inside of the joint shall be wiped clean and finished smooth. In pipe too small for a man to work inside, wiping may be done by dragging a suitable swab or long-handled brush through the pipe as work progresses. The mortar bead on the outside shall be protected from air and sun with a proper covering until satisfactorily cured.

6.3 Prefabricated Corrugated Metal Manholes. Manholes with or without bituminous coating shall be of the type and design of the manufacturer. Manholes shall be complete with frames and cover, or frames and gratings.

6.4 Frame and Gratings. Fabrication shall be from one or more of the material options presented in Fed. Spec. RR-F-621, except the malleable cast iron option shall conform to ASTM A 220, Grade 40010; or from reinforced concrete conforming to the requirements of section: CONCRETE. Weight, shape, size, and waterway openings for grates and curb inlets shall be as indicated on the plans. Frames and covers for curb inlets and for areas not subject to vehicular traffic or storage may be malleable iron if so indicated. Malleable-iron frames and covers shall conform to ASTM A 220 and shall be of the weight, shape, and size indicated.

7. JOINTS.

7.1 For Concrete and Clay Pipe.

7.1.1 Flexible Watertight Joints.

7.1.1.1 Materials and Test Requirements. Flexible watertight joints shall be made with rubber-type gaskets for concrete pipe and with factory-fabricated resilient materials for clay pipe. The design of joints and the physical requirements for rubber-type gaskets shall conform to ASTM C 443 or AASHTO M 198. Factory-fabricated resilient joints materials shall be, at the option of the Contractor, one of three types and of the materials and manufacture conforming to ASTM C 425. Gaskets shall have not more than one factory-fabricated splice, except that two factory-fabricated splices of the rubber gasket type are permitted if nominal diameter of pipe being gasketed exceeds 54 inches. Material conforming to Fed. Spec. SS-S-210 is acceptable as an alternate to ASTM C 443 provided the necessary installation instructions are furnished.

7.1.1.2 Watertight Joints. Watertight joints shall be tested and shall meet test requirements of paragraph HYDROSTATIC TEST ON WATERTIGHT JOINTS. Certified copies of test results shall be delivered to the Contracting Officer before gaskets or jointing materials are installed. Alternate types of watertight joint may be furnished if specifically approved.

7.1.1.3 Installation. Gaskets and jointing materials shall be as recommended by the particular manufacturer in regard to use of lubricants, cements, adhesives, and other special installation requirements. Surfaces to receive lubricants, cements, or adhesives shall be clean and dry. Gaskets and jointing materials shall be affixed to the pipe not more than 24 hours prior to the installation of the pipe, and shall be protected from the sun, blowing dust, and other deleterious agents at all times. Gaskets and jointing materials shall be inspected before installing the pipe; any loose or improperly affixed gaskets and jointing materials shall be removed and replaced. The pipe shall be alined with the previously installed pipe, and the joint pulled together. If, while making the joint, the gasket or jointing material becomes loose and can be seen through the exterior joint recess when joint is pulled up to within one inch of closure, the pipe shall be removed and the joint remade.

7.2 For Asbestos-Cement Pipe.

7.2.1 Watertight Joints. Watertight joints shall be made with asbestos-cement sleeve-type couplings and rubber sealing rings. The physical requirements for the rings shall conform to ASTM D 1869. The ring shall have not more than one factory-fabricated splice. Watertight joints shall be tested and shall meet the test requirements of paragraph HYDROSTATIC TEST ON WATERTIGHT JOINTS. Other types of watertight joint may be furnished if specifically approved. Gaskets and jointing materials shall be installed according to the recommendations of the pipe manufacturer in regard to use of lubricants, and gaskets and jointing materials shall be clean and dry and protected from the sun, blowing dust, and other deleterious agents at all times. If the gasket or joint material is not satisfactorily installed, the pipe and coupling shall be removed and the joint remade.

8. EXCAVATION AND TRENCHING FOR PIPE CULVERTS AND STORM DRAINS AND DRAINAGE STRUCTURES. Excavation of trenches and backfilling for culverts and storm drains shall be in accordance with the applicable portions of section: EXCAVATION, TRENCHING, AND BACKFILLING FOR UTILITIES SYSTEMS.

8.1 Trenching. Width of trenches at any point below the top of the pipe shall be not greater than the outside diameter of the pipe plus 8 inches to permit satisfactory jointing and the thorough tamping of the bedding material under the around pipe. Sheeting and bracking where required shall be placed within the trench width as specified. Care shall be taken not to overexcavate. Where trench widths are exceeded, redesign with a resultant increase in cost of stronger pipe or special installation procedures shall be necessary. Cost of this redesign and increased cost of pipe or installation shall be borne by the Contractor without additional cost to the Government.

8.2 Removal of Rock. Rock in either ledge or boulder formation shall be replaced with selected materials to provide a compacted earth cushion having a thickness between unremoved rock and the pipe of at least 8 inches or 1/2-inch for each foot of fill over the top of the pipe, whichever is greater, but not more than 3/4 the nominal diameter of the pipe. Where bell-and-spigot pipe is used, the cushion shall be maintained under the bell as well as under the straight portion of the pipe. Rock excavation shall be as specified and defined in section: EXCAVATION, TRENCHING, AND BACKFILLING FOR UTILITIES SYSTEMS.

8.3 Removal of Unstable Material. Where wet or otherwise unstable soil incapable of properly supporting the pipe, as determined by the Contracting Officer, is encountered in bottom of trench, such material shall be removed to depth required and replaced to the proper grade with selected material, compacted as provided in paragraph BACKFILLING. When removal of unstable material is due to the fault or neglect of the Contractor in his performance of shoring and sheeting, water removal, or other specified requirements, resulting material shall be excavated and replaced.

9. BEDDING. The bedding surface for the pipe shall provide a firm foundation of uniform density throughout the entire length of the pipe. The pipe shall be bedded carefully in a soil foundation accurately shaped and rounded to conform to the lowest 1/4 of the outside portion of circular pipe or to the lower curved portion of pipe arch for the entire length of pipe or arch. When necessary, the bedding shall be tamped. Bell holes and depressions for joints shall be only of such length, depth, and width as required for properly making the particular type joint.

10. PLACING PIPE. Each pipe shall be carefully examined before being laid, and defective or damaged pipe shall not be used. Pipelines shall be laid to the grades and alinement indicated. Proper facilities shall be provided for lowering sections of pipe into trenches. Lifting lugs in vertically elongated metal pipe shall be placed in the same vertical plane as the major axis of the pipe. Under no circumstances shall pipe be laid in water, and no pipe shall be laid when trench conditions or weather are unsuitable for such work. Diversion of drainage or dewatering of trenches during construction shall be provided as necessary. All pipe in place shall be inspected before backfilling, and those damaged during placement shall be removed and replaced at no additional cost to the Government.

10.1 Concrete and Clay and Asbestos-Cement Pipe. Laying shall proceed upgrade with spigot ends of bell-and-spigot pipe and tongue ends of tongue-and-groove pipe pointing in the direction of the flow. Asbestos-cement pipe and couplings are frangible; therefore, additional care should be used in handling these items.

10.2 Circular Concrete Pipe with Elliptical Reinforcing. Placement shall be so that reference lines designating top of pipes will be not more than 5 degrees from the vertical plane through the longitudinal axis of the pipe. In all backfilling operations care shall be taken to prevent damage to or misalinement of the pipe.

11. BACKFILLING.

11.1 Backfilling Pipe in Trenches. After the bedding has been prepared and the pipe installed, selected material from excavation or borrow, at a moisture content that will facilitiate compaction, shall be placed along both sides of pipe in layers not exceeding 6 inches in compacted depth. The backfill shall be brought up evenly on both sides of pipe for the full length of pipe. Care shall be taken to insure thorough compaction of the fill under the haunches of the pipe. Each layer shall be thoroughly compacted with mechanical tampers or rammers. This method of filling and compacting shall continue until the fill has reached an elevation of at least 12 inches above the top of the pipe. The remainder of the trench shall be backfilled and compacted by spreading and rolling or compacted by mechanical rammers or tampers in layers not exceeding 18 inches. Tests for density will be made as necessary to insure conformance to the compaction requirements specified in "Compaction" below. Where it is necessary in the opinion of the Contracting Officer, any sheeting and/or portions of bracing used shall be left in place, and the contract will be adjusted accordingly. Untreated sheeting shall not be left in place beneath structures or pavements.

11.2 Backfilling Pipe in Fill Sections. For pipe placed in fill sections, backfill material and the placement and compaction procedures shall be as specified above and in "Compaction" below. The fill material shall be uniformly spread in layers longitudinally on both sides of pipe, not exceeding 6 inches in compacted depth, and shall be compacted by rolling parallel with pipe or by mechanical tamping or ramming. Prior to commencing normal filling operations, the crown width of the fill at a height of 12 inches above the top of the pipe shall extend a distance of not less than twice the outside pipe diameter on each side of the pipe of 12 feet, whichever is less. After the backfill has reached at least 12 inches above the top of the pipe, the remainder of the fill shall be placed and thoroughly compacted in layers not exceeding 18 inches.

11.3 Movement of Construction Machinery. In compacting by rolling or operating heavy equipment parallel with the pipe, displacement of or injury to the pipe shall be avoided. Movement of construction machinery over a culvert or storm drain at any stage of the construction shall be at the Contractor's risk. Any pipe damaged thereby shall be repaired or replaced at the expense of the Contractor.

11.4 Compaction. Cohesionless materials include gravels, gravel-sand mixtures, sands, and gravelly sands. Cohesive materials include clayey and silty gravels, gravel-silt mixtures, clayey and silty sands, sand-clay mixtures, clays, silts, and very fine sands. When results of compaction tests for moisture-density relations are recorded on graphs, cohesionless soils will show straight lines or reverse-shaped moisture-density curves, and cohesive soils will show normal moisture-density curves.

11.4.1 Minimum Density. Backfill over and around pipe and backfill around and adjacent to drainage structures shall be compacted at the approved moisture content to the following applicable minimum density(ies) which will be determined as specified below in "Determination of Density."

11.4.1.1 Under airfield and heliport pavements, paved roads, streets, parking areas, and similar-use pavements including adjacent shoulder areas, the density shall be not less than 90 percent of maximum density for cohesive material and 95 percent of maximum density for cohesionless material, up to the elevation where requirements for pavement subgrade materials and compaction shall control.

11.4.1.2 Under unpaved or turfed traffic areas, 90 percent of maximum density for cohesive material and 95 percent of maximum density for cohesionless material.

11.4.1.3 Under nontraffic areas; density shall be not less than that of surrounding material.

11.4.2 Determination of Density. Testing shall be the responsibility of the Contractor and performed at no additional cost to the Government. Testing shall be performed by an approved commercial testing laboratory or by the Contractor subject to approval. Tests shall be performed in sufficient number to insure that specified density is being obtained. Laboratory tests for moisture-density relations shall be made in accordance with AASHTO T 180, except that mechanical tampers may be used provided the results are correlated with those obtained with the specified hand tamper. Field density tests shall be performed in accordance with MIL-STD-621, Test Method 106.

12. HYDROSTATIC TEST ON WATERTIGHT JOINTS. A hydrostatic test shall be made on the watertight joint types proposed. Only one sample joint of each type needs testing; however, if the sample joint fails because of faulty workmanship, an additional sample joint may be tested. During the test period, the joint shall be protected from high temperatures that might soften or adversely affect the jointing materials. The possibility that some water may be absorbed by concrete pipes during this test will be considered before rejecting any rubber seals proposed. No allowance will be made for leakage in the seams of corrugated metal pipe. Performance requirements for joints in reinforced and nonreinforced concrete pipe shall conform to ASTM C 443 or AASHTO M 198 and test requirements for joints in clay pipe shall conform to ASTM C 425, except that tests for either abovementioned requirement shall be performed at an internal hydrostatic pressure of 10 psi for a 24-hour period. For asbestos-cement with annular joints in straight alinement, watertight joints shall be required to withstand an internal hydrostatic pressure of 10 psi without visible leakage over a 24-hour period. Upon completion of the test for asbestos-cement pipe with annular joints in straight alinement, the test sections shall be deflected from alinement by an angle whose tangent is 1/2 inch divided by the pipe diameter in inches. Joints shall be required to withstand an internal hydrostatic pressure of 10 psi without visible leakage for 24 hours. Upon completion of the test and for installations in which differential settlement may be expected, the distance between the coupled pipe ends shall be increased at least 2 inches (by loosening the longitudinal tie rods holding the test joint and reapplying pressure). Without further adjustment of the band and gasket, the opened joint shall then be retested and required to withstand additionally internal hydrostatic pressure equivalent to 5 feet of head without visible leakage over a 24 hour period.

* * * * *

STANDARD DETAIL 260

CITY OF PHOENIX
ENGINEERING DEPARTMENT

STORM DRAIN MANHOLE SHAFT

APPROVED: JC Atthury — CITY ENGINEER — 3/20/72 DATE

UNLESS OTHERWISE SHOWN ON PLANS USE 2-2½" PRECAST CONCRETE RINGS ON IMPROVED STREETS & USE 4-2½" RINGS ON UNIMPROVED STREETS.

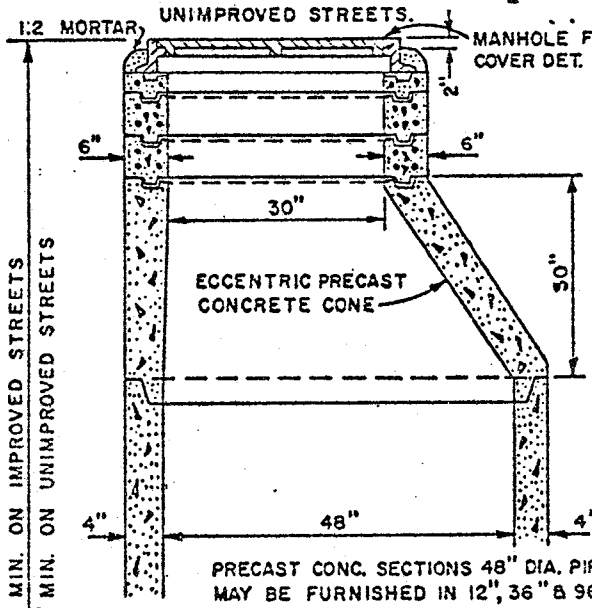

PRECAST CONC. SECTIONS 48" DIA. PIPE MAY BE FURNISHED IN 12", 36" & 96" LENGHTS.

ALL JOINTS SHALL BE FILLED WITH 1:2 MORTAR AND NEATLY POINTED OR WIPED ON INSIDE OF SHAFT.

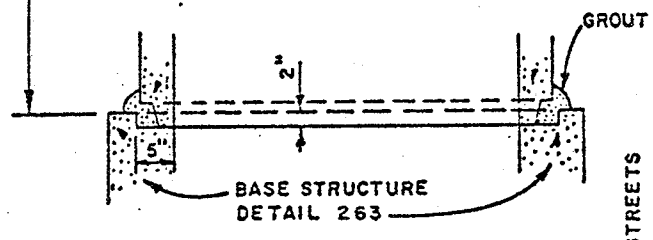

VERTICAL SECTION OF ECCENTRIC MANHOLE SHAFT

NOTES:
PRECAST CONC. CONES & SECTIONS TO BE ASTM C-76 CLASS II WALL A

UNLESS OTHERWISE SPECIFIED BRICK MAY BE USED IN LIEU OF CONCRETE ADJUSTING RINGS.

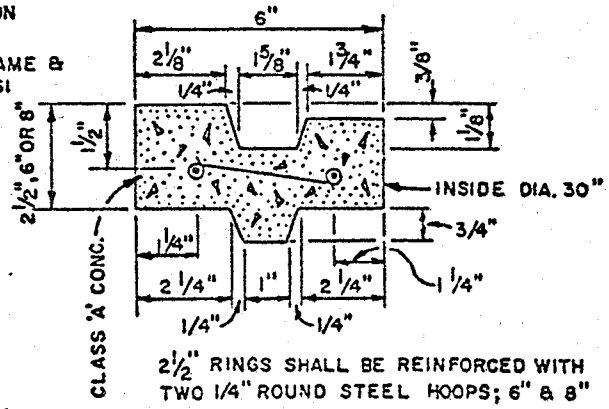

2½" RINGS SHALL BE REINFORCED WITH TWO 1/4" ROUND STEEL HOOPS; 6" & 8" RINGS SHALL BE REINFORCED WITH FOUR 1/4" HOOPS, TIED WITH NO. 14 A.S.&W. GAUGE WIRE 8" O.C..

REINFORCED CONC. RING

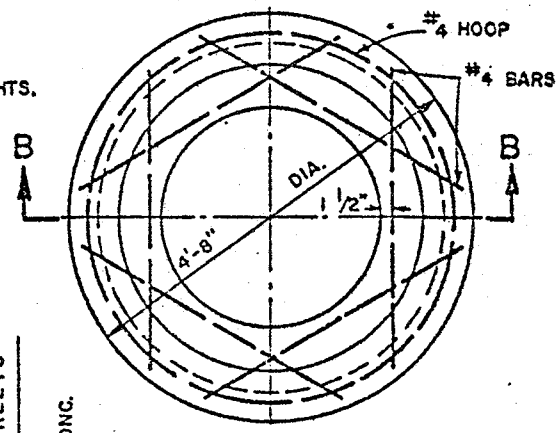

PLAN

USE WHERE THERE IS 3'-11" OR LESS COVER OVER PIPE ON IMPROVED STREETS OR 4'-4" OR COVER OVER PIPE ON UNIMPROVED STREETS.

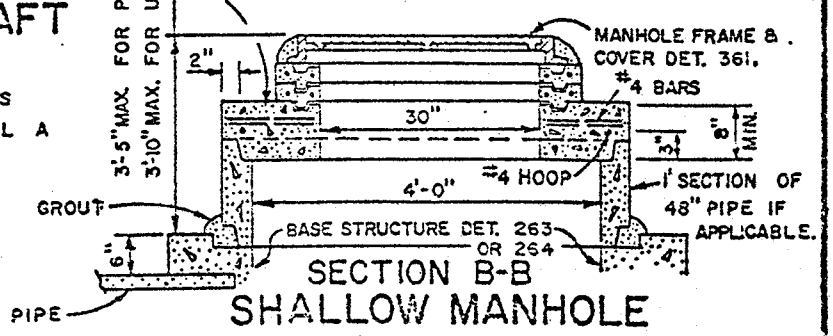

SECTION B-B
SHALLOW MANHOLE

REV. 3-72 WF
NEW: JUNE 1966

STANDARD DETAIL 263

CITY OF PHOENIX

PUBLIC WORKS DEPARTMENT

DIVISION OF ENGINEERING

STORM DRAIN MANHOLE BASE NO. 1, 48" DIA. PIPE & UNDER

APPROVED: R C Estebrooke 3/31/66

CITY ENGINEER DATE

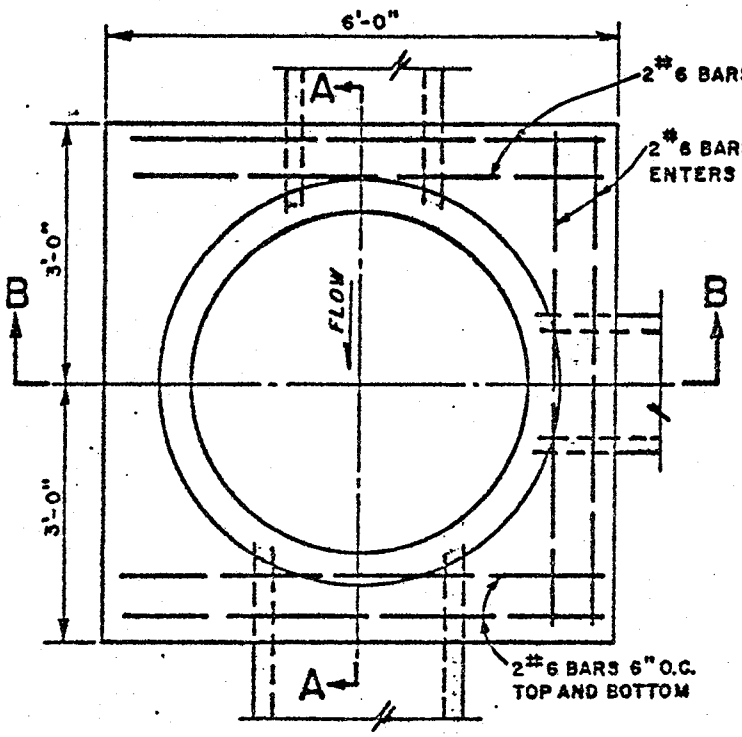

PLAN

NOTES:

ALL CONCRETE CLASS 'A'.

MATCH SPRING LINES OF PIPES ENTERING M.H. UNLESS OTHERWISE NOTED.

CUT PIPES TO ALLOW SETTING OF 4' DIA. CYLINDRICAL FORM FROM 6" ABOVE MAIN LINE PIPE TO SPRING LINE. CUT PIPE 2" LARGER THAN FORM TO ALLOW 2" CONC. OVER ENDS OF ALL CUT PIPE. INVERT AND BASE OF M.H. TO BE POURED AND INVERT TO BE SHAPED BY HAND TO MAKE SMOOTH TRANSITION. FINISH WITH RUBBER FLOAT.

CENTER M.H. ON PIPE JOINT WHERE PIPE CHANGES SIZE, LEAVE GAP. 12" MIN., 24" MAX.

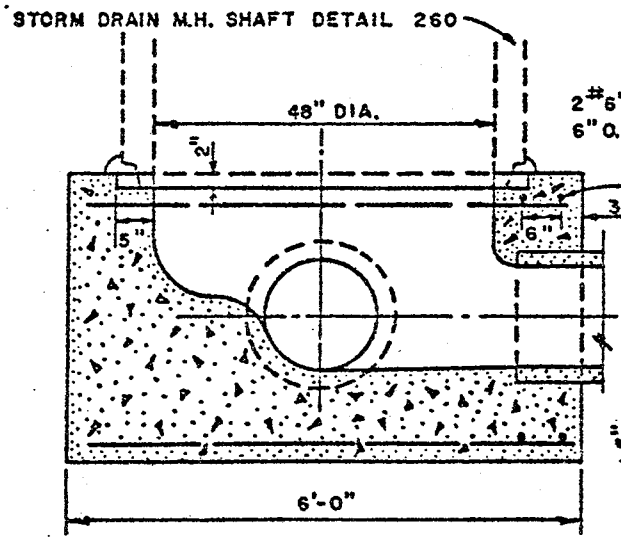

SECTION B-B

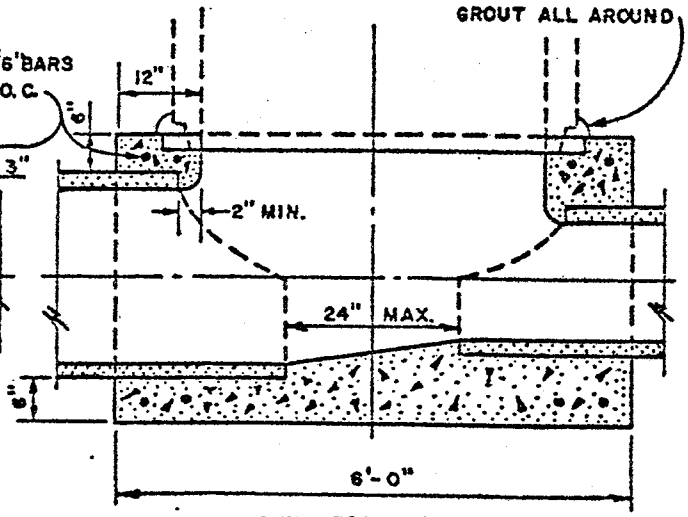

SECTION A-A

NEW: JUNE 1966

SECTION 9A

AGGREGATE BASE (ARIZONA)

Index

1. Applicable Publications
2. Materials
3. Sampling and Testing
4. Equipment
5. Operation of Pits or Quarries
6. Weather Limitations
7. Preparation of Underlying Surface
8. Grade Control
9. Mixing and Placing Materials
10. Layer Thickness
11. Compaction
12. Edges of Base Course
13. Smoothness Test
14. Thickness Control
15. Maintenance
16. Waybills and Delivery Tickets

1. APPLICABLE PUBLICATIONS. The following publications of the issues listed below, but referred to thereafter by basic designation only, form a part of this specification to the extent indicated by the references thereto.

1.1 American Society for Testing and Materials (ASTM) Publications.

C 117-69	Materials Finer than No. 200 (75-m) Sieve in Mineral Aggregates by Washing
C 127-73	Specific Gravity and Absorption of Coarse Aggregate
C 128-73	Specific Gravity and Absorption of Fine Aggregate
C 131-76	Resistance to Abrasion of Small Size Coarse Aggregate by Use of the Los Angeles Machine
C 136-76	Sieve or Screen Analysis of Fine and Coarse Aggregates
D 75-71	Sampling Aggregates
D 422-63	Particle-Size Analysis of Soils
D 423-66(R 1972)	Liquid Limit of Soils
D 424-59(R 1971)	Plastic Limit and Plasticity Index of Soils
D 1556-64 (1974)	Density of Soil In Place by the Sand-Cone Method
D 1557-70	Moisture-Density Relations of Soils, Using 10-lb. (4.5-kg) Rammer and 18-in. (457-mm) Drop
E 11-61	Sieves for Testing Purposes

2. MATERIALS. Aggregates shall consist of crushed stone or slag, crushed gravel, angular sand, soil, or other sound, durable, approved materials processed and blended or naturally combined. Aggregates shall be durable and sound, free from lumps and balls of clay, organic matter, objectionable coatings, and other foreign material. It shall be the responsibility of the Contractor to obtain materials that will meet the requirements specified herein and that can be constructed to meet the grade and smoothness requirements specified herein after all compaction requirements have been completed. The material retained on a No. 4 sieve shall be known as coarse aggregate, and the material passing the No. 4 sieve shall be known as binder material.

2.1 Coarse Aggregate conforming to the requirements specified above shall have a percentage of wear not to exceed 50 percent after 500 revolutions. Slag shall be an air-cooled blast-furnace product having a dry weight of not less than 65 pounds per cubic foot. Coarse aggregate shall consist of angular fragments reasonably uniform in density and quality. The amount of flat and elongated particles shall not exceed 30 percent. A flat particle is one having a ratio of width to thickness greater than 3, and an elongated particle is one having a ratio of length to width greater than 3.

2.1.1 Coarse aggregate retained on each sieve specified shall contain at least 50 percent by weight of crushed pieces having two or more freshly fractured faces with the area of each face being at least equal to 75 percent of the smallest midsectional area of the piece. When two fractures are adjacent, the angle between the planes of the fractures must be at least 30 degrees to count as two fractured faces.

2.2 Binder Material shall consist of screenings, angular sand, soil, or other finely divided mineral matter processed or naturally combined with the coarse aggregate. Liquid-limit and plasticity-index requirements stated herein shall apply to any component that is blended to meet the required gradation and shall also apply to the completed course. The portion of any component or of the completed course passing the No. 40 sieve shall be either nonplastic or shall have a liquid limit not greater than 25 and a plasticity index not greater than 5.

2.3 Gradation requirements specified herein shall apply to the completed base course, and it shall be the responsibility of the Contractor to obtain materials that will meet the gradation requirements after mixing, placing, compacting, and other operations. The aggregates shall have a maximum size of one inch and shall be continuously graded within the limits specified below:

Sieve Designation	Percentage by Weight Passing Square-Mesh Sieve†
1 inch	100
3/4 inch	90-100
1/4 inch	45-75
No. 200	2-9

†The values are based on aggregates of uniform specific gravity, and the percentages passing the various sieves are subject to appropriate correction by the Contracting Officer when aggregates of varying specific gravities are used.

3. SAMPLING AND TESTING shall be by and at the expense of the Contractor.

3.1 Samples shall be the size required and shall be taken by the Contractor. Copies of test results shall be submitted for approval 30 days prior to starting the work, and thereafter at regular intervals during production as specified hereinafter. These samples shall be obtained at the source, from test pits, borings, trucks, stockpiles, or from other designated locations. Samples for material gradation, liquid-limit determination, and plasticity-index tests shall be taken in conformance with ASTM D 75. After the material has been placed and compacted, samples for density tests shall be taken as specified in ASTM D 1556, and additional samples for gradation, liquid-limit, and plasticity-index tests shall be taken by an appropriate method. Where deemed necessary, the sampling will be supervised by the Contracting Officer. The Contractor shall arrange his work so that sampling and testing may be performed without interruption.

3.2 Tests.

3.2.1 Aggregate Gradation. Aggregate gradation shall be determined in accordance with ASTM C 117, C 127, C 128, C 136, and D 422. Sieves shall conform to ASTM E 11.

3.2.2 Liquid Limit shall be determined in accordance with ASTM D 423.

3.2.3 Plasticity Index shall be determined in accordance with ASTM D 424.

3.2.4 Wear Test shall be made in conformance with ASTM C 131.

3.2.5 Field-In Place Density shall be determined in accordance with ASTM D 1556. Moisture-density relations shall be established in the laboratory in accordance with ASTM D 1557, method D.

3.3 Testing Frequency. Results of tests to determine particle shape, presence of objectionale coatings and foreign matter, percentage of wear, fracture count, gradation, liquid-limit, plasticity-index, specific gravity, and other specification requirements for determination of the acceptability of the source shall be submitted for approval at least 7 days prior to starting of manufacture of the base course material. Production testing for material gradation, liquid limit, and plasticity index shall be performed at regular intervals with at least one test being made for each 500 cubic yards or fraction thereof, of material produced and results shall be submitted on a daily basis. Deviations from specification requirements shall be corrected immediately upon discovery. After the material has been placed and compacted, one field density test for each 1,000 square yards or fraction thereof of finished base course and one additional gradation, liquid-limit, and plasticity index test for each 3,000 square yards of base course or fraction thereof shall be performed. Maximum-density moisture relations shall be established for each 1,000 square yards of base course material. The location of the after-placement tests shall be as directed. One copy of density data (less dry weight determinations) shall be provided on the day each test is taken. The completed test report shall be provided with the Contractor Quality Control Report on the following work day. Results of all tests made shall be submitted for approval on a daily basis and subsequent paving operations shall not commence until final approval has been obtained. Failure of any test shall be reported verbally, by the most expeditious means and followed promptly by written report. Contractor field operations shall immediately reflect corrective measures. For every failing test, retesting after completion of corrective measures have been taken will be required.

3.4 Approval of Material. The source of the material shall be selected 30 days in advance of the time materials will be required in the work. Tentative approval of the preliminary reports submitted by the Contractor and the source will be based on an inspection by the Contracting Officer. Tentative approval of the materials will be based on test samples as specified herein. Final approval of both the source and the materials will be based on specified tests performed on samples taken from the completed and compacted base course.

4. EQUIPMENT. All plant, equipment, and tools used in the performance of the work covered by this section will be subject to approval by the Contracting Officer before the work is started and shall be maintained in satisfactory working condition at all times. The equipment shall be adequate and have the capability of producing the required compaction, meeting grade controls, thickness controls, and smoothness requirements as set forth herein and within the specified time limits.

5. OPERATION OF PITS OR QUARRIES. All work involved in clearing, stripping, and excavating in opening or operation of pits or quarries shall be performed by the Contractor. Pits or quarries shall be opened to expose vertical faces of deposit to depths suitable for working. Materials excavated from pits shall be obtained in successive vertical cuts extending through all exposed strata. All pockets or strata of unsuitable materials overlying or occurring within the deposit shall be wasted as directed. The methods of operating pits or quarries and the processing and blending of the material may be changed or modified by the Contracting Officer when necessary to obtain material conforming to the specified requirements. Quarries shall be conditioned in agreement with the local laws or authorities.

6. WEATHER LIMITATIONS. Aggregate base courses shall be constructed when the atmospheric temperature is above 35 degrees F. When the temperature falls below 35 degrees F., the Contractor shall protect all areas of the completed aggregate base course, by approved methods, against any detrimental effects of freezing. Areas of completed aggregate base course damaged by freezing, rainfall, or other weather conditions shall be corrected to meet specified requirements.

7. PREPARATION OF UNDERLYING SURFACE. Prior to constructing the aggregate base course, the previously constructed subgrade shall be cleaned of all foreign substances. The surface of the subgrade shall be inspected by the Contractor for adequate compaction and surface tolerances. The subgrade shall conform to section: EARTHWORK. Ruts or soft, yielding spots that may appear in the subgrade areas having inadequate compaction, and deviations of the surface from the requirements set forth therein shall be corrected to line and grade and to all specification requirements. The finished subgrade shall not be disturbed by traffic or other operations and shall be maintained by the Contractor in a satisfactory condition until the base course is placed.

8. GRADE CONTROL. During construction the lines and grades including crown and cross slope indicated for the aggregate base course shall be maintained by means of line and grade stakes placed by the Contractor at the worksite in accordance with SPECIAL PROVISIONS of these specifications.

9. MIXING AND PLACING MATERIALS. The materials shall be mixed by the stationary-plant, traveling-plant or road-mix method and placed in such a manner as to obtain uniformity of the aggregate base course material and at a uniform optimum moisture content for compaction. The Contractor shall make such adjustments in mixing or placing procedures or in equipment as may be directed to obtain the true grades, to minimize segregation and degradation, to reduce to accelerate loss or increase of water, and to insure a satisfactory aggregate base course meeting all the requirements of this specification.

10. LAYER THICKNESS. The compacted thickness of the aggregate base course shall be as indicated. When a compacted layer of 6 inches is indicated, the material may be placed in a single layer. When a compacted layer thickness of more than 6 inches is indicated, the material shall be placed in two layers of approximately equal thickness.

11. COMPACTION. Each layer of the aggregate base course (including shoulders) shall be compacted with approved compaction equipment. Water content shall be maintained at optimum or at the percentage specified during compaction. In places not accessible to the rollers, the mixture shall be compacted with mechanical tampers. Compaction shall continue until each layer through the full depth is compacted to at least 100 percent of maximum density. The Contractor shall make such adjustments in rolling or finishing procedures as may be required to obtain true grades, to minimize segregation and degradation, to reduce or accelerate loss or gain of water, and to insure a satisfactory aggregate base course. Unsatisfactory materials shall be reworked to produce a satisfactory material.

12. EDGES OF BASE COURSE. Where the course is not placed between curbs or similar construction, approved material shall be placed along the edges of the aggregate base course in such quantities as will compact to the thickness of the course being considered, or, when the course is being constructed in two layers, to the thickness of each layer of the course. Allow in each operation at least a 1-foot width of the shoulder to be rolled and compacted simultaneously with the rolling and compacting of each layer of the base course, as directed.

13. SMOOTHNESS TEST. The surface of each layer shall not show any deviations in excess of 3/8 inch when tested with either a 10- or 12-foot straightedge applied both parallel with and at right angles to the centerline of the paved area. Deviations exceeding this amount shall be corrected by removing material and replacing with new material, or by reworking existing material and compacting, as directed.

14. THICKNESS CONTROL. The completed thicknesses of the base course shall be within 1/4 inch, plus or minus, of the thickness indicated. Thickness test shall be made and recorded by the Contractor. The thickness of the base course shall be measured at intervals in such manner that there will be a thickness measurement for at least each 500 square yards of base course. The thickness measurement shall be made by test holes at least 3 inches in diameter through the base course. Where the measured thickness of the base course is more than 1/4 inch deficient in thickness, the Contractor, at no additional expense to the Government, shall correct such areas by scarifying, adding mixture of proper gradation, reblading, and recompacting, as directed. Where the measured thickness of the base course is more than 1/4 inch thicker than that indicated, it shall be considered as conforming with the specified thickness requirements plus 1/2 inch. The average job thickness shall be the average of the job measurements determined as specified above, but shall be within 1/4 inch of the thickness indicated.

15. MAINTENANCE. The Contractor shall maintain the aggregate base course in a satisfactory condition until the completed work is accepted.

16. WAYBILLS AND DELIVERY TICKETS. Copies of waybills or delivery tickets shall be attached to the Daily Contractor Quality Control Report for the day of delivery. Before the final statement is allowed, the Contractor shall file with the Contracting Officer waybills and/or certified delivery tickets for all aggregates actually used in the construction covered by the contract.

* * * * *

SECTION 9B

PAINTING, GENERAL

Index

1. Applicable Publications
2. General
3. Materials
4. Quality Assurance Provisions
5. Cleaning, Preparation, and Pretreatment of Surfaces
6. Paint Application
7. Painting Schedule
8. Surface Not Requiring Painting
9. Cleaning

1. APPLICABLE PUBLICATIONS. The following publications of the issues below, but referred to thereafter by basic designation only, form a part of this specification to the extent indicated by the references thereto.

1.1 Federal Specifications (Fed. Spec.).

SS-W-110C	Water-Repellent, Colorless Silicone Resin Base
TT-E-489F & Int Am-1	Enamel, Alkyd, Gloss (For Exterior and Interior Surfaces)
TT-E-505a & Am-3	Enamel, Odorless, Alkyd, Interior, High Gloss, White and Light Tints
TT-E-506J	Enamel, Alkyd, Gloss, Tints and White (For Interior Use)
TT-E-508b & Am-4	Enamel: Interior Semigloss, Tints and White
TT-E-509b & Am-2	Enamel, Odorless, Alkyd, Interior, Semigloss, White and Tints
TT-E-543a & Am-1	Enamel, Interior, Undercoat, Tints and White
TT-E-545B	Enamel, Odorless, Alkyd, Interior-Undercoat, Flat, Tints and Whites
TT-F-1098D	Filler, Block, Solvent-Thinned, for Porous Surfaces (Concrete Block, Cinder Block, Stucco, Etc.)
TT-P-29J	Paint, Latex-Base, Interior, Flat, White and Tints
TT-P-30d	Paint, Alkyd, Odorless, Interior, Flat, White and Tints
TT-P-57b & Am-1	Paint, Zinc Yellow-Iron Oxide-Base, Ready-Mixed
TT-P-86G	Paint, Red-Lead-Base, Ready-Mixed
TT-P-105a & Am-1	Paint, Oil: Chalk-Resistant, Lead-Free, Exterior Ready-Mixed White and Tints
TT-P-615d & Am-2	Primer Coating: Basic Lead Silico Chromate, Ready Mixed
TT-P-641G	Primer Coating; Zinc Dust-Zinc Oxide (For Galvanized Surfaces)
TT-P-645	Primer, Paint, Zinc-Chromate, Alkyd Type
TT-P-650C	Primer Coating, Latex Base, Interior, White (For Gypsum Wallboard)
TT-S-179B	Sealer Surface: Pigmented Oil, for Plaster and Wallboard
TT-S-708a & Am-1	Stain, Oil; Semi-Transparant, Wood, Exterior
TT-S-711b & Am-2	Stain; Oil Type, Wood, Interior
TT-V-85C	Varnish, Oil, Low Sheen, Brush or Spray Application

1.2 Federal Standards.

No. 141a & Change Notices 1, 2, 3, & 4	Paint, Varnish, Lacquer, and Related Materials; Methods of Inspection, Sampling, and Testing
No. 595a & Change Notices 1, 2, 3, & 4	Colors

1.3 Military Specifications.

MIL-S-12935D	Sealer, Surface; for Knots
MIL-P-15328C & Am-1	Primer (Wash), Pretreatment, Blue (Formula No. 117-B for Metals)
MIL-P-26915A (USAF) & Am-1	Primer Coating, Zinc Dust Pigmented, for Steel Surfaces
MIL-P-52324 (MO)	Paint, Oil, Alkyd, Exterior, White and Light Tints

1.4 Steel Structures Painting Council (SSPC) Specifications.

SSPC-SP 6-63	Commercial Blast Cleaning
SSPC-SP 10-63T	Near-White Blast Cleaning

2. GENERAL. The term "paint," as used herein, includes enamels, paints, stains, varnishes, sealers, and other coatings, whether used as prime, intermediate, or finish coats.

3. MATERIALS. Paints shall be in sealed containers that plainly show the designated name, formula or specification number, batch number, color, quantity involved, date of manufacture, manufacturer's formulation number, manufacturer's directions, and name of manufacturer, all of which shall be plainly legible at the time of use. Pigmented paints shall be furnished in containers not larger than 5 gallons. Materials shall conform to the specifications shown in the painting schedule herein and to the requirements hereinafter specified. Contractor inspection responsibility shall be as specified in paragraph titled QUALITY ASSURANCE PROVISIONS. When the required quantity of a material of a particular color is 25 gallons or less, a proprietary brand of material similar in intended usage and color to that specified may be proposed, and the responsibility of the Contractor for inspection, as specified above, may be waived.

3.1 Exterior Oil Paint shall conform to the following Federal or Military Specifications.

3.1.1 For Exposures Not Requiring Fume Resistance.

White: TT-P-105; or MIL-P-52324, class (1) (2)
Light tints: TT-P-105; or MIL-P-52324, class 2.

3.2 Ferrous-Metal Primer shall conform to Federal Specification TT-P-57, type I; TT-P-86, type I or II; TT-P-615, type I, II, or V; or TT-P-645.

3.3 Fungicide. The material specified for the first coat and each subsequent coat, applied to cotton, canvas, or other fabric, shall contain a fungicide that will not adversely affect the color, texture, or durability of the coating. The fungicidal agent shall be incorporated into the paint by the manufacturer in a quantity so that the paint will meet the fungus resistance test specified in Federal Specification TT-P-19.

3.4 Vinyl-Type Wash Coat shall conform to Military Specification MIL-P-15328.

3.5 Zinc-Dust-Containing Paint shall conform to Federal Specification TT-P-641, type II, or Military Specification MIL-P-26915.

4. QUALITY ASSURANCE PROVISIONS. Paint proposed for use shall be stored on the project site in sealed and labeled containers, or segregated at the source of supply, sufficiently in advance of need to allow 30 days for testing. The Contractor shall furnish a certificate for each paint proposed for use attesting that the paint contains not more than either 0.06 percent lead or 0.5 percent lead as defined in paragraph: MATERIALS. When certifying a maximum 0.5 percent lead the Contractor shall also certify that the paint was manufactured prior to 23 June 1977. The Contractor shall also furnish either one of the following data for all batches in excess of 25 gallons:

a. A test report showing that the proposed batch has met all specification requirements.

b. A test report showing that a previous batch, manufactured using the same formulation as that used in manufacturing the proposed batch has met all specification requirements, and a report showing test results on the proposed batch for the following properties for which there are requirements in the material specification: weight per gallon, viscosity, fineness of grind, drying time, color, and gloss.

Testing procedures and reports shall be as specified in paragraph 5 of Method 1031.2 of Federal Standard 141. Upon notification by the Contractor that the material is at the site or source of supply, a 1-quart sample of each batch, except for small quantities for which the use of proprietary brands has been approved, shall be taken by random selection from the sealed containers by the Contractor in the presence of a representative of the Contracting Officer. The contents of the sampled containers shall be so thoroughly mixed as to render the sample truly representative. Samples shall be clearly identified by designated name, specification number, batch number, project contract number, intended use, and quantity involved. At the discretion of the Contracting Officer, samples may be tested by

the Government before approval, or materials may be approved for use based on the test reports furnished. If the materials are approved based on reports furnished by the Contractor, samples will be retained by the Government for possible future testing should the materials appear to be defective during or after application. If the sample is tested by the Government and it fails to meet specification requirements, the material represented by the sample shall be replaced, and the cost of retesting will be deducted from the payments due the Contractor at the rate of $100 per sample retested.

5. CLEANING, PREPARATION, AND PRETREATMENT OF SURFACES.

5.1 General. Hardware, hardware accessories, machined surfaces, plates, lighting fixtures, sprinkler heads or fire detection elements, and similar items in contact with painted surfaces and not to be painted shall be removed, masked, or otherwise protected prior to surface preparation and painting operations. Such removal shall be done by workmen skilled in the trades involved. Exposed nails and other ferrous metal on or in contact with surfaces to be painted with water-thinned paints shall be spot-primed with zinc dust, zinc dust-zinc oxide, basic lead silico chromate, or zinc chromate primer. Surfaces to be painted shall be clean before applying paint or surface treatments. Surfaces not to be painted shall be in a new condition or shall be wire-brushed and touched up to remove all evidence of rust, corrosion, or abrasion. Oil and grease shall be removed with clean cloths and cleaning solvents prior to mechanical cleaning. Cleaning solvents shall be of low toxicity and shall have a flashpoint in excess of 100 degrees F. Cleaning and painting shall be so programmed that dust and other contaminants from the cleaning process will not fall on wet, newly painted surfaces.

5.2 Concrete and Masonry Surfaces to be painted shall be prepared by removing efflorescence, chalk, dust, dirt, grease, oil, asphalt, tar, excessive mortar and mortar droppings, and by roughening to remove glaze. Surface deposits of free iron shall be removed prior to painting. Immediately be painted shall be uniformly and thoroughly dampened, with no free surface water visible, by several applications of potable water with a fog spray, allowing time between the sprayings for the water to be absorbed.

5.3 Wood Surfaces.

5.3.1 General. Wood surfaces, except surfaces to be given natural finish, shall be primed and finish-coated as specified in the painting schedule herein. Wood surfaces to be painted shall be cleaned of dirt, oil and other foreign substances with mineral spirits, scrapers, and/or sandpaper. Finished surfaces exposed to view shall be made smooth by sandpapering. Glazing rabbets and beads in exterior sash and doors shall be primed prior to glazing. Small, dry, seasoned knots shall be surface scraped and thoroughly cleaned, and shall be given a thin coat of knot sealer conforming to Military Specification MIL-S-12935 before application of the priming coat. Pitch on large, open, unseasoned knots and all other beads or streaks of pitch shall be scraped off, or if still soft, shall be removed with mineral spirits or turpentine checked to insure that finishing nails have been properly set; then all holes and surface imperfections shall be primed. After priming, all holes and imperfections in finish surfaces shall be filled with putty or plastic wood filler, colored to match the finish coat if natural finish is required, allowed to dry, and sandpapered smooth. Unless otherwise authorized, painting shall proceed only when the moisture content of the wood does not exceed 12 percent as measured by a moisture meter.

5.3.2 Interior Wood Surfaces to receive stained or natural finish, except as hereinafter specified, shall be properly prepared to approved shade and lightly sanded. Oak and other open-grain wood shall be given the same treatment and, in addition, shall be given a coat of paste wood filler not less than 8 hours after the application of stain. Excess filler shall be removed and the surface then sanded smooth. Each varnish coat shall be lightly sanded prior to application of subsequent coat.

5.4 Ferrous surfaces that have not been shop-coated shall be solvent-cleaned to remove oil and grease. Surfaces that contain rust, loose mill scale, and other foreign substances shall be mechanically cleaned by power wirebrushing or sandblasting. Minor amounts of residual rust, that cannot be removed except by thorough blast-cleaning, and tight mill scale that cannot be removed by applying a sharp knife to any edge, will be allowed to remain. After cleaning, one coat of ferrous-metal primer shall be applied to ferrous surfaces to receive paint. The semitransparent film applied to some pipes and tubing at the mill is not to be considered as a shop coat, but shall be overcoated with the specified ferrous metal primer prior to application of finish coats.

5.4.1 Shop Coated Ferrous Surfaces shall be stored out of contact with the ground in such manner and location as will minimize the formation of water-holding pockets, soiling, contamination and deterioration of the paint film. Such metal work shall be protected from corrosion before and after installation by treating corroded areas immediately upon detection. Abraded or corroded spots on shop-coated surfaces shall be wire-brushed and touched up with material similar to the shop coat.

5.5 Galvanized Surfaces to be painted shall be solvent-cleaned and treated with vinyl-type wash coat. Galvanized surfaces not to be painted shall be solvent-cleaned.

5.6 Plaster Surfaces shall be clean, shall be free from grit, loose plaster, and surface irregularities, and shall have an instrument-measured moisture content not exceeding 8 percent.

5.7 Mastic-Type Surfaces to be painted shall be prepared by removing foreign material.

5.8 Cotton or Canvas Covering over insulation on pipes, ducts, tanks, and other equipment, in all locations regardless of whether exposed or concealed, shall be given two coats of nonpenetrating size to which fungicide has been added. The size shall be lightly tinted to facilitate identification and shall be applied in such manner as to completely seal the surface. If pipe covering is banded, the banding shall be moved as necessary to accomplish thorough sizing under the bands. For subsequent painting, where required, the banding shall be left in place and painted along with the insulation covering.

6. PAINT APPLICATION.

6.1 General. The finished surfaces shall be free from runs, drops, ridges, waves, laps, brush marks, and variations in color, texture, and finish. The hiding shall be complete, and each coat shall be so applied as to produce film of uniform thickness. Special attention shall be given to insure that all surfaces including edges, corners, crevices, welds, and rivets receive a film thickness equivalent to that of adjacent painted surfaces. Respirators shall be worn by persons engaged or assisting in spray painting. Adjacent areas and installations shall be protected by the use of drop cloths, or other approved precautionary measures shall be taken. Metal or wood surfaces adjacent to surfaces to receive water-thinned paints shall be primed and/or touched up prior to the application of water-thinned paints. The first coat on plaster and gypsum wall board shall include such repeated touching up of suction spots or overall applications of primer-sealer as necessary to produce a uniform color and gloss. The first coat on both faces of wood doors shall be applied at essentially the same time.

6.2 Coating Progress. Sufficient time shall elapse between successive coats to permit proper drying. This period shall be modified as necessary to suit adverse weather conditions. Oil base or oleoresinous solvent-type paints shall be considered dry for recoating when the paint feels firm, does not deform or feel sticky under moderate pressure of the thumb, and the application of another coat of paint does not cause lifting or loss of adhesion of the undercoat.

6.3 Storage, Mixing, and Thinning.

6.3.1 General. At time of application, paint shall show no signs of hard settling, excessive skinning, livering, or other deterioration. Paint shall be thoroughly stirred, strained, and kept at a uniform consistency during application. Paints of different manufacturers shall not be mixed together. Where necessary to suit conditions of surface, temperature, weather, and method of application, packaged paint may be thinned immediately prior to application in accordance with the manufacturer's directions, but not in excess of 1 pint of suitable thinner per gallon. The use of thinner for any reason shall not relieve the Contractor from obtaining complete hiding.

6.3.2 Vinyl-type Wash Coat conforming to Military Specification MIL-P-15328 shall be mixed by adding 1 volume of acid component to 4 volumes of resin component. The acid component shall be added slowly, with constant stirring, to the resin component. After mixing, the wash coat shall be used within 8 hours. If additional thinning is required to maintain a wet spray, reduction shall be made with normal butyl alcohol or 99 percent isopropyl alcohol.

6.4 Atmospheric Conditions. Paints other than water-thinned coatings shall be applied only to surfaces that are completely free of surface moisture as determined by sight or touch. In no case shall paint be applied to surfaces upon which there is visible frost or ice. While painting is being done, the temperature of the surfaces to be painted and of the atmosphere in contact therewith shall be at or above 50 degrees F. for water-thinned coatings and 45 degrees F. for other coatings. During periods of inclement weather, painting may be continued by inclosing the surfaces with temporary shelters and applying artificial heat, provided the temperature requirements prescribed above are maintained. Unvented combustion type heaters will not be permitted.

6.5 Time Between Surface Preparation and Painting. Surfaces that have been cleaned, pretreated, and/or otherwise prepared for painting shall be given a coat of the specified first-coat material as soon as practicable after such preparation has been completed, but in any event prior to any deterioration of the prepared surface.

6.6 Method of Paint Application.

6.6.1 Metal. First coats other than vinyl-type wash coats shall be applied by brush, except that where the item has been shop primed or field primed, the first coat may be applied by brush, roller, or spray. Subsequent coats may be applied by brush, roller, or spray. Vinyl-type wash coats may be applied by brush, spray, or swab.

6.6.2 Exterior Wood Surfaces to Receive Natural Finish. The finish shall be applied by brushing with the grain of the wood for the full length of the board or course of siding without stopping for more than 5 minutes. The finish shall be stirred frequently during application to maintain uniform suspension of the pigments.

6.6.3 Other Surfaces may be coated by brush, roller, or spray, except for filler coats. Application of solvent-thinned filler shall be applied by brush, allowed to set for 3 to 5 minutes or until the filler becomes tacky, and the excess filler material removed with a rubber squeegee. Surface voids, pores, and cracks shall be filled, and the dry film shall be uniform and free from pinholes or other voids. Surface irregularties need not be completely filled. The material shall not be applied over calking compound.

6.6.4 Vinyl-Type Wash Coat shall be applied at a spreading rate of 250 to 300 square feet per gallon, to give a dry-film thickness of from 0.3 to a maximum of 0.5 mil. Care shall be exercised in spray application to avoid the deposition of dry particles on the surface. A wet spray shall be maintained at all times. Surfaces treated with the wash coat shall be permitted to dry for not less than 1 hour and shall be coated as soon thereafter as practicable but within 48 hours after application and prior to any deterioration or accumulation of dust or dirt.

6.6.5 Special Requirements.

6.6.5.1 Rollers for applying paints and enamels shall be of a type designed for the coating to be applied and the surface to be coated.

6.7 Exterior Wood Surfaces to Receive Natural Finish. On smooth surfaces the finish shall be applied at a spreading rate of 400 to 500 square feet per gallon. On rough surfaces such as unplaned or scarred face of bevel siding, the finish shall be spread at the rate of 200 to 250 square feet per gallon.

7. PAINTING SCHEDULE. Except as specified under paragraph: SURFACES NOT TO BE PAINTED, the surfaces listed in the PAINTING SCHEDULE shall receive the surface preparation, paints, and number of coats prescribed. Piping shall not be painted until the piping has been tested and approved. Explanatory information for use with the painting schedule is as follows:

7.1 Shop-Painted Items. Surfaces of fabricated and assembled items that are finish-painted by the manufacturer, or specified to be finish-painted under other sections of the specifications, are exempted from the following schedule requirements for surface preparation and painting. Shop-primed items shall receive surface preparation and finish painting as required by this section.

7.2 Colors and Tints, including shades of stain, shall match the respective color specimens selected by the Contracting Officer. Colors and tints shall conform to Federal Standard No. 595. Undercoats shall vary slightly from the color of the next coat. Stains shall conform in shade to manufacturer's standard color.

7.3 Surface Preparation and Pretreatment. Cleaning and pretreatment of surfaces prior to painting shall be accomplished in accordance with the detailed requirements specified.

8. SURFACES NOT REQUIRING PAINTING. The following listed items will not require painting: Lockers, toilet compartments, aluminum window, wall components.

9. CLEANING. Cloths and cotton waste that might constitute a fire hazard shall be placed in closed metal containers or destroyed at the end of each day. Upon completion of the work, staging, scaffolding, and containers shall be removed from the site or destroyed in an approved manner. Paint spots, oil, or stains upon adjacent surfaces shall be removed and the entire job left clean and acceptable.

PAINTING SCHEDULE

Surface	Surface preparation and pretreatment.	1st coat	2d coat	3d coat
Exterior wallboard surfaces.	Remove foreign matter, efflorescence, and roughen glazed surfaces.	TT-P-29	Exterior Oil Paint	None.
Exterior concrete masonry units and exposed poured concrete construction.	Remove foreign matter, loose particles, and efflorescence.	SS-W-110	None	None.
Exterior concrete surfaces.	Remove foreign matter, loose particles and efflorescence	TT-P-19	TT-P-19	None.
Exterior wood surfaces to receive natural finish.	Remove foreign matter.	TT-S-708.	None.	None.
Exterior ferrous surface, exposed unless otherwise specified.	As previously specified.	Exterior oil paint.	Exterior oil paint.	None.
Exterior galvanized surfaces.	As previously specified.	TT-P-641, type II, or MIL-P-26915, type I, class A.	Exterior oil paint.	None.
Exposed interior calking compound.	As specified in section: CALKING AND SEALANTS.		Same as adjacent areas.	
Interior concrete masonry units, concrete (except concrete floors and textured ceilings), gypsum board, unless otherwise specified.	As previously specified for each type of surface.	TT-P-29.	TT-E-543 or TT-E-545.	TT-E-508 or TT-E-509.
Interior plaster, unless otherwise specified.	As previously specified.	TT-S-179 or TT-P-29.	TT-E-545 or TT-E-545.	TT-E-508 or TT-E-509.

PAINTING SCHEDULE (Continued)

Surface	Surface preparation and pretreatment.	1st coat	2d coat	3d coat	4th coat
Interior concrete-masonry-unit walls in shower and latrine areas, unless otherwise specified.	As previously specified.	TT-F-1098.	TT-P-29 or TT-S-179.	TT-E-543 or TT-E-545.	TT-E-505 or TT-E-506.
Interior walls and ceilings in shower and latrine, except ferrous surfaces and concrete masonry units, unless otherwise specified.	As previously specified for each type of surface.	TT-P-29 or TT-S-179 or TT-P-650, type I.	TT-E-543 or TT-E-545.	TT-E-505 or TT-E-506.	
Interior exposed ferrous surfaces, unless otherwise specified.	As previously specified.	TT-E-543 or TT-E-545.	TT-E-505 or TT-E-506.	None.	
Ferrous surfaces of mechanical and electrical equipment that has been factory primed.	Solvent clean as specified.	TT-E-489, class A.	TT-E-489, class A.	None.	
Ferrous surfaces of mechanical and electrical equipment that has been factory finished.	Clean as required.	None.	None.	None.	
Interior concrete masonry units, plaster and gypsum board for heavy traffic areas and areas requiring high degree of sanitation in the following spaces: All toilets.	As previously specified for each type surface. Fill surface of concrete masonry units with TT-F-1098.	TT-P-29.	TT-E-543 or TT-E-545.	TT-E-505 or TT-E-506.	
Wood and metal interior trim, doors, and windows, except in shower and latrine areas, and natural-finished wood surfaces.	As previously specified for each type of surface.	TT-E-543 or TT-E-545.	TT-E-508 or TT-E-509.	None.	

PAINTING SCHEDULE (Continued)

Surface	Surface preparation and pretreatment.	1st coat	2d coat	3d coat
Interior wood and metal surfaces in shower and latrine areas, other than equipment, machinery and natural-finished wood surfaces.	As previously specified for each type of surface.	TT-E-543 or TT-E-545.	TT-E-505 or TT-E-506.	None.
Interior galvanized surfaces, unless otherwise specified.	As previously specified.	Same as for adjacent surfaces.		
Interior wood surfaces (except floors) unless otherwise specified.	Remove foreign matter. Sandpaper as required.	TT-E-543 or TT-E-545.	TT-P-30.	None.
		TT-E-543 or TT-E-545.	TT-E-508 or TT-E-509.	None.
		TT-E-543 or TT-E-545.	TT-E-505 or TT-E-506.	None.
Interior wood surfaces (except floors, handrails, seats, and pews) to receive stain or natural finish, as follows: doors, casework, trim.	Clean and sandpaper as required. Stain with TT-S-711 for shade as necessary. Fill and seal as necessary.			
		TT-V-85.	TT-V-85.	TT-V-85.
Electrical conduit runs, metallic tubing, uninsulated ducts and pipes, pipe hangers, louvers, grilles, and air outlets in areas having painted adjacent surfaces.	As previously specified for each type of surface.	Where painted adjacent surfaces have gloss finish: TT-E-543 or TT-E-545.	TT-E-506 or TT-E-505.	None.
		Where painted adjacent surfaces have semigloss finish: TT-E-543 or TT-E-545.	TT-E-508 or TT-E-509.	
		Where painted adjacent surfaces have flat finish. TT-P-30.	TT-P-30.	None.
Exposed-to-view-cotton or canvas fabric covering over insulation on pipes, tanks, and other equipment, interior.	As previously specified.	TT-P-30	TT-P-30 or TT-P-29.	None. None.

PAINTING SCHEDULE (Continued)

Surface	Surface preparation and pretreatment.	1st coat	2d coat	3d coat
Exposed-to-view paper facing of vapor barrier jackets over pipe or duct insulation.	As previously specified.	Two coats of paint to match adjacent areas.		
Exposed-to-view presized or adhesive finished glass cloth over insulation on pipes, ducts, and equipment, interior.	Remove foreign matter.	TT-P-30.	TT-P-30.	None.

* * * * *

SECTION 9C

MISCELLANEOUS AGGREGATES

Index

1. Applicable Publications
2. Gravel Placement and Material
3. Sand
4. Decomposed Granite
5. Sand Backfill Material
6. Herbicides

1. APPLICABLE PUBLICATIONS. The following publications of the issues listed below, but referred to thereafter by basic designation only, form a part of this specification to the extent indicated by the references thereto.

1.1 American Society for Testing and Materials (ASTM) Publications.

C 33-74	Concrete Aggregates
C 131-69	Resistance to Abrasion of Small Size Coarse Aggregate by Use of the Los Angeles Machine
C 144-70	Aggregate for Masonry Mortar

2. GRAVEL PLACEMENT AND MATERIAL. Gravel shall be placed on the service road and irrigation pump station site or as shown on the drawings in accordance with the following requirements: Gravel shall be clean, hard, sound, durable, uniform in quality, and free of any detrimental quantity of soft, friable, thin, elongated, or laminated pieces, disintegrated material, organic matter, oil, alkali, or other deleterious substance.

2.1 Abrasion. The loss of abrasion in the Los Angeles abrasion machine, determined as prescribed in ASTM C 131, Grading A, shall not exceed 10 percent, by weight, after 100 revolutions nor 40 percent after 500 revoultions.

2.2 Gravel Composition. Gravel shall be composed entirely of particles that are either fully or partially rounded and water-worn. Crushed rock may be combined provided it is uniformly distributed throughout and blended with the gravel. The quality and gradation requirements shall be as follows: ASTM C 33, 3/4-inch maximum size as indicated in Grading Table for coarse aggregates.

3. SAND. Sand shall be placed on the areas as shown on the drawings and shall be fine granular material produced by the crushing of rock or gravel or naturally produced by disintegration of rock and shall be sufficiently free of organic material, mica, loam, clay, oil, and other deleterious substances.

3.1 Sand shall conform to the following gradation requirements: ASTM C 144, except that not less than 3 percent nor more than 15 percent shall pass the No. 100 sieve.

4. DECOMPOSED GRANITE. Decomposed granite shall be placed on the areas as shown on the drawings in accordance with the following requirements.

4.1 Decomposed granite shall be any granitoid igneous rock which has been weathered in place and which has as principal constituents granular fragments of quartz and feldspar. It may also contain fragments of granite rock not yet broken down into the component minerals. The material shall remain stable when saturated with water.

4.2 Material shall be free from all foreign objects, lumps, irregularities and shall be consistent in color.

4.3 Decomposed granite shall have a maximum size of not more than 3/4", have not more than 20 percent of the material passing the No. 200 sieve, and shall have a plasticity index of less than 10 for the materials passing the No. 40 sieve.

5. SAND BACKFILL MATERIAL. Sand backfill material shall be placed behind wing walls and retaining walls as shown on the plans and in accordance with the following requirements.

5.1 Sand backfill material and sacked drain material shall consist of gravel, crushed gravel, crushed rock, natural sands, manufactured sand, or combinations thereof. Sand backfill material shall conform to the following gradation requirements.

Sieve Size	Percent Passing
No. 4	95 - 100
No. 8	80 - 90
No. 16	55 - 75
No. 30	30 - 60
No. 50	10 - 30
No. 100	2 - 10

5.1.2 Sacked drain material shall be placed at weep holes where indicated and shall conform to the following gradation requirements.

Sieve Size	Percent Passing
1-inch	100
3/4-inch	90 - 100
3/8-inch	20 - 55
No. 4	0 - 10
No. 8	0 - 5

5.2 Sand backfill material shall be placed in layers along with and by the same methods specified for structure backfill.

6. HERBICIDES. Areas to be covered with decomposed granite or gravel shall be treated with a commercial compound of Dimethyl ester of tetrachloroterephthalic acid applied at maximum manufacturer's approved rates for pre-emergent herbicides. Material shall be applied to ground in a slurry mix through a 50 mesh or larger screen prior to and following installation of decomposed granite.

* * * * *

SECTION 9D

PRIME COAT

Index

1. Applicable Publications
2. Bituminous Material
3. Sampling and Testing
4. Quantity To Be Applied
5. Weather Limitations
6. Equipment
7. Preparation of Surface
8. Application of Bituminous Material
9. Waybills and Delivery Tickets

1. APPLICABLE PUBLICATIONS. The following publications of the issues listed below, but referred to thereafter by basic designation only, form a part of this specification to the extent indicated by the references thereto.

1.1 American Society for Testing and Materials (ASTM) Publications.

D 140-70	Sampling Bituminous Materials
D 2027-72	Liquid Asphalt (Medium-Curing Type)

1.2 American Association of State Highway and Transportation Officials (AASHTO) Standard.

T 102-68	Spot Test of Asphaltic Materials

2. BITUMINOUS MATERIAL. The bituminous material for the prime coat shall be liquid asphalt, conforming to ASTM D 2027, designation MC-70 with the additional requirement that the residue from distillation to 680 degrees F. shall show a negative spot test when submitted to AASHTO T 102, using the standard naphtha specified therein.

3. SAMPLING AND TESTING.

3.1 Sampling. Samples of bituminous material, unless otherwise specified, shall be in accordance with ASTM D 140.

3.2 Testing shall be the responsibility of the Contractor. Testing shall be performed by an acceptable commercial testing laboratory or by the Contractor on approval of the Contracting Officer. Materials shall be tested to establish compliance with the specified requirements.

3.3 Certified Laboratory Test Reports. Before delivery of bituminous materials, certified copies, in triplicate, of the tests specified herein and in referenced publications shall be submitted to and approved by the Contracting Officer. The testing shall have been performed by an independent laboratory approved by the Contracting Officer.

4. QUANTITY TO BE APPLIED. Bituminous material for the prime coat shall be applied in quantities of not less than 0.15 gallon nor more than 0.4 gallon per square yard of the surface to be primed. Application of prime coat shall be divided, if necessary, into 2 applications to avoid flowing off the surface. The exact quantities which may be varied to meet field conditions shall be determined by the Contractor and approved.

5. WEATHER LIMITATIONS. The prime coat shall be applied only when the prepared surface is dry or contains moisture not exceeding quantity to permit uniform distribution and desired penetrations; and the temperature has not been below 35 degrees F. for 12 hours immediately prior to application. Prime coat shall not be applied when the atmospheric temperature in the shade is below 50 degrees F.

6. EQUIPMENT.

6.1 General. All equipment, tools, and machines, used in the performance of the work required by this section shall be subject to the approval and shall be maintained in satisfactory working condition.

6.2 Bituminous Distributor shall have pneumatic tires of such width and number than the load produced on the base surface shall not exceed 650 pounds per inch of tire width. The distributor shall be designed and equipped to distribute the bituminous material uniformly at even heat on variable widths of surface at readily determined and controlled rates from 0.05 to 2.0 gallons per square yard with a pressure range of 25 to 75 pounds per square inch and with an allowable variation not to exceed 5% from any specified rate. Distributor equipment shall include a separate power unit for the bitumen pump, full circulation spray bars, tachometer, pressure gage, volume measuring devices, adequate heaters for heating the materials to the proper application temperature, a thermometer to show the temperature of the tank contents, and a hose attachment suitable for applying bituminous material to spots unavoidably missed by the distributor. The distributor shall be equipped to circulate and agitate the bituminous material during the heating process.

6.3 Heating Equipment for Storage Tanks. Equipment for heating bituminous material shall consist of steam coils and equipment for producing steam, so designed that steam cannot get into the material. An armored thermometer with a range from 40 to 200 degrees F. shall be fixed to the tank so that the temperature of the bituminous material may be read at all times.

6.4 Brooms and Blowers shall be of the power type and shall be suitable for cleaning prepared surfaces.

7. PREPARATION OF SURFACE. Immediately before applying the prime coat, all loose material, dirt, clay or other objectionable substance shall be removed from the surface by means of a power broom or blower supplemented with hand brooms. After the cleaning operation and prior to the application of the material, an inspection of the area to be treated shall be made by the Contractor to determine its fitness to receive the material. The Contracting Officer shall be notified 24 hours in advance of application of the material. To assure a uniform spread of the material, the areas prepared for treatment, if excessively dry, shall be lightly sprinkled with water immediately before the application as directed.

8. APPLICATION OF BITUMINOUS MATERIAL. Immediately following the preparation of the surface, the bituminous material shall be applied by means of a bituminous distributor. The bituminous material shall be applied at a pressure within the range of 25 to 75 pounds per square inch and in the amounts as directed. The bituminous material shall be so applied that uniform distribution is obtained at all points of the surface to be treated. Unless the distributor is equipped to obtain satisfactory results at the junction of the previous and subsequent applications, building paper shall be spread on the surface of applied material for a sufficient distance back from the ends of each application so that flow from the sprays may be started and stopped on the paper, and all sprayers operate at full force on the surface to be treated. Immediately after the application, building paper shall be removed and destroyed. Spots unavoidably missed by the distributor shall be properly treated with bituminous material. Following the application of bituminous material, the surface shall be allowed to dry without being disturbed for a period of not less than 48 hours, or longer as necessary to attain penetration into the foundation course and evaporation of the volatiles from prime material. The Contractor shall furnish and spread enough approved sand to blot up effectively and cure any excess bituminous material. The Contractor shall maintain the primed surface until the succeeding layer of pavement is placed by protecting the surface against damage and by repairing and repriming deficient areas at no additional cost to the Government. No smoking, fires, or flames other than heaters that are a part of the equipment shall be permitted without heating, distributing, or transferring operations of bituminous material.

8.1 Application Temperature shall be as directed and shall provide an application viscosity between 40 and 120 centistrokes, kinematic, or 20 and 60 seconds, Saybolt-Furol. Application temperatures shall be between 120-190 degrees F. except that appropriate changes should be made when the range of viscosity is raised or lowered.

The temperature-viscosity relationship shall be furnished to the Contracting Officer.

9. WAYBILLS AND DELIVERY TICKETS. Copies of waybills or delivery tickets shall be submitted during the progress of the work. Before the final statement is allowed, the Contractor shall file with the Contracting Officer certified waybills and/or certified delivery tickets for all bituminous material actually used in the construction of pavement covered by this section of the specification. The Contractor shall not remove bituminous material from the tank car or storage tank until the initial outage and temperature measurements have been taken by the Contracting Officer; nor shall the Contractor release the car or storage tank until the final outage has been taken by the Contracting Officer.

* * * * *

SECTION 9E

TACK COAT

Index

1. Applicable Publications
2. Bituminous Material
3. Sampling and Testing
4. Quantities To Be Applied
5. Equipment
6. Weather Limitations
7. Preparation of Surface
8. Application of Bituminous Material
9. Waybills and Delivery Tickets

1. APPLICABLE PUBLICATIONS. The following publications of the issues listed below, but referred to thereafter by basic designation only, form a part of this specification to the extent indicated by the references thereto.

1.1 American Society for Testing and Materials (ASTM) Standards.

D 140-70 (1976)	Sampling Bituminous Materials
D 977-73	Emulsified Asphalt

1.2 American Association of State Highway and Transportation Officials (AASHTO) Standards.

T 102-68	Spot Test of Asphaltic Materials

2. BITUMINOUS MATERIAL used for the tack coat shall be asphalt emulsion and shall conform to the following requirements.

2.1 Asphalt Emulsion shall conform to ASTM D 977, Type RS-1, with the additional requirement that the base asphalt used to manufacture the emulsion shall show a negative spot when tested in accordance with AASHTO T 102, using the standard naphtha specified therein. The Contractor shall furnish a certified statement from the emulsion manufacturer giving an analysis of the base asphalt used in the manufacturer of the emulsion and attesting to conformity to the applicable requirements above.

3. SAMPLING AND TESTING.

3.1 Sampling. Samples of bituminous material, unless otherwise specified, shall be in accordance with ASTM D 140.

3.2 Testing shall be the responsibility of the Contractor. Testing shall be performed by an acceptable commercial testing laboratory or by the Contractor on approval of the Contracting Officer. Materials shall be tested to establish compliance with the specified requirements. Certificates of compliance shall be furnished.

4. QUANTITIES TO BE APPLIED. Bituminous material for the tack coat shall be applied in quantities of not less than 0.05 gallon nor more than 0.15 gallon per square yard. The exact quantities within the range specified may be varied to suit field conditions, shall be determined by the Contractor and approved.

5. EQUIPMENT.

5.1 General. All equipment, tools, and machines used in performance of work required by this section shall be subject to approval and shall be maintained in satisfactory working condition.

5.2 Bituminous Distributor shall have pneumatic tires of such width and number that the load produced on the base surface shall not exceed 650 pounds per inch of tire width. The distributor shall be designed and equipped to distribute bituminous material uniformly at even heat on variable widths of surface at readily determined and controlled rates ranging from 0.05 to 2.0 gallons per square yard, with a pressure range of 25 to 75 pounds per square inch, and with an allowable variation from specified rate not exceeding 5%. Distributor equipment shall include a separate power unit for the bitumen pump, full-circulation spray bars, tachometer, pressure gages, volume measuring devices, adequate heaters for heating materials to proper application temperature, thermometer for reading the temperature of tank contents, and a hose attachment suitable for applying bituminous material manually to cover areas inaccessible to the distributor. The distributor shall be equipped for circulation and agitation of the bituminous material during the heating process.

5.3 Heating Equipment. The equipment for heating bituminous material shall consist of steam coils and equipment for producing steam, designed so steam will not be introduced into the material. An armored thermometer with a range from 40 degrees F. to 170 degrees F. shall be fixed to the tank so temperature of the bituminous material may be read at all times.

5.4 Power Brooms and Power Blowers shall be suitable for cleaning the surfaces to which the tack coat is applied.

6. WEATHER LIMITATIONS. Tack coat shall be applied only when the surface to be treated is dry and the temperature shall not have been lower than 35 degrees F. for 12 hours immediately prior to application. It shall not be applied when the atmospheric temperature in the shade is lower than 50 degrees F.

7. PREPARATION OF SURFACE. Immediately before applying the tack coat, if surface is sufficiently bonded, all loose material, dirt, clay, or other objectionable material, shall be removed from the surface to be treated with a power broom or blower supplemented with hand brooms. After the cleaning operation, and prior to application of the tack coat, an inspection of the area to be treated will be made by the Contracting Officer to determine fitness of the area to receive the bituminous coating. That portion of surface prepared for immediate treatment shall be dry and in a satisfactory condition.

8. APPLICATION OF BITUMINOUS MATERIAL. Immediately following preparation of surface, the bituminous material shall be applied by a bituminous distributor at a temperature determined by the Contracting Officer, within the range of 75 to 130 degrees F. Under no circumstances shall emulsion be heated to a temperature greater than 140 degrees F. or exposed to a temperature of less than 40 degrees F. The bituminous material shall be applied so uniform distribution is obtained over all points of the surface to be treated. Unless the distributor is equipped to obtain satisfactory results at the junction of previous and subsequent applications, building paper shall be spread on the surface for a sufficient distance back from the ends of each application so that flow through the sprays may be started and stopped on the paper, and all sprays operate at full force on the surface to be treated. Immediately after application, the building paper shall be removed and destroyed. Lightly coated areas and spots missed by the distributor shall be properly treated with bituminous material. Following application of bituminous material, the surface shall be allowed to dry to a proper condition of tackiness to receive surfacing. The period of time shall be as determined by the Contracting Officer. The Contractor shall furnish and spread a sufficient quantity of clean, dry sand on all areas that show an excess of bituminous material, to effectively blot up and cure the excess when directed by the Contracting Officer. The treated surface shall be maintained by the Contractor until the succeeding layer of pavement has been placed. During this interval the Contractor shall protect the treated surface against damage and shall repair all damaged spots at no additional cost to the Government.

9. WAYBILLS AND DELIVERY TICKETS. Copies of waybills or delivery tickets shall be submitted during the progress of the work. Before the final statement is allowed, the Contractor shall file with the Contracting Officer certified waybills and/or certified delivery tickets for all bituminous material used in the construction of the pavement covered by this section of the specification. The Contractor shall not remove bituminous material from tank car or storage tank until initial outage and temperature measurements have been taken, nor shall the Contractor release the car or storage tank until the final outage has been taken.

* * * * *

SECTION 9G

ASPHALT CONCRETE
(CENTRAL-PLANT HOT MIX)

(SOUTH PACIFIC DIVISION)
LAD REVISION 8/1/74

Index

1. Applicable Publications
2. Description
3. Aggregates
4. Bituminous Material
5. Aggregate Gradation
6. Composition of Mixture
7. Mixing Plant
8. Other Equipment
9. Treatment of Underlying Surface
10. Transportation of Bituminous Mixture
11. Placing
12. Compaction of Mixture
13. Joints
14. Protection of Pavement
15. Surface Requirements
16. Sampling

1. APPLICABLE PUBLICATIONS. The following publications of the issues listed below, but referred to thereafter by basic designation only, form a part of this specification to the extent indicated by the references thereto.

1.1 American Association of State Highway and Transportation Officials (AASHT) Standard.

M 226-73	Viscosity Graded Asphalt Cement

1.2 American Society for Testing and Materials (ASTM) Publications.

C 117-69	Materials Finer Than No. 200 (75 um) Sieve in Mineral Aggregates by Washing
C 127-73	Specific Gravity and Absorption of Coarse Aggregate
C 128-73	Specific Gravity and Absorption of Fine Aggregate
C 136-71	Sieve or Screen Analysis of Fine and Coarse Aggregates
D 242-70	Mineral Filler for Bituminous Paving Mixtures
D 1559-75	Resistance to Plastic Flow of Bituminous Mixtures Using Marshall Apparatus

1.3 Military Standard.

MIL-STD-620A & Notice 1	Test Methods for Bituminous Paving Materials

2. DESCRIPTION. Asphalt concrete indicated as "A.C." or "P.M.S." shall consist of fine and coarse aggregates and mineral filler, if required, uniformly mixed with hot bituminous material, and placed and compacted on a prepared base course.

3. AGGREGATES shall consist of crushed stone, crushed slag, crushed or uncrushed gravel, screenings, sand, and mineral filler. Aggregates shall have a satisfactory service record in bituminous pavement construction. The source selected shall be approved by the Contracting Officer. Material passing the No. 200 sieve shall be known as mineral filler. Mineral filler shall conform to ASTM D 242. The combined aggregates and mineral filler shall meet the requirements of subsequent paragraphs entitled AGGREGATE GRADATION and COMPOSITION OF MIXTURE.

4. BITUMINOUS MATERIAL to be mixed with the mineral aggregates shall be asphalt cement conforming to AASHO M226, viscosity grade AR-80 Table 3.

5. AGGREGATE GRADATION. The aggregate gradation as determined by ASTM C 117 and C 136 and as selected by the Contracting Officer shall conform to one of the following:

Sieve Openings	Percentage by Weight, Passing		
	a	b	c
1 inch	100	–	–
3/4 inch	90-100	100	–
1/2 inch	–	90-100	100
3/8 inch	70-85	80-95	80-95
No. 4	50-65	55-72	55-73
No. 8	38-53	40-55	45-60
No. 50	12-26	14-27	17-30
No. 200	4-8	4-8	4-9

6. COMPOSITION OF MIXTURE.

6.1 Job-Mix Formula shall be submitted by the Contractor, and no bituminous mixture shall be manufactured until it has been approved. The formula will indicate the percentage of each sieve fraction of aggregate, percentage of asphalt, and temperature of the mixture as discharged from the mixer. The percentage of asphalt in the job-mix formula will be between 5.0 percent and 8.5 percent. Samples of the aggregates and asphalt shall be submitted for approval with the job-mix formula.

6.2 Test Properties of Bituminous Mixtures. The apparent specific gravity, as determined by ASTM C 127 and C 128, shall be used in computing the voids total mix and voids filled with bitumen, and the mixture shall meet the following requirements as determined by ASTM D 1559:

Test Property	50-Blow Compaction
Stability, minimum, pounds	500
Flow, maximum, 1/100-inch	20
Voids total mix, percent	3-5
Voids filled with bitumen, percent	75-85

6.3 Stripping of Aggregates. If the index of retained stability of the job-mix formula is less than 75 when tested in accordance with Method 104 of MIL-STD-620, the aggregates shall be rejected or treated by one of the following procedures:

(1) Addition of heat-stable additives to bitumen.

(2) Addition of hydrated lime, or other cementitious material containing free lime, as a portion of the mineral filler.

7. MIXING PLANT shall be a weigh-batch or continuous-mixing type approved by the Contracting Officer and operated so as to produce a mixture within the job-mix formula.

8. OTHER EQUIPMENT.

8.1 Bituminous-Materials Spreaders shall be self-propelled, capable of producing a finished surface conforming to the smoothness requirements specified hereinafter. The use of a spreader that leaves indentations or other objectionable irregularities in the freshly-laid mix will not be permitted.

8.2 Blowers and Brooms shall be of the power type suitable for cleaning the surface to be paved.

8.3 Saw shall be of the power type, capable of rapidly cutting pavement and trimming joints and edges of pavement.

8.4 Small Tools available on the work shall consist of the following: rakes, lutes, shovels, tampers, smoothing irons, pavement cutters, portable heater for heating small tools, wood sandals and stilt sandals of standard type, and other small tools as may be required.

8.5 Steel-Wheel Rollers shall be self-propelled, 3-wheel (tricycle) and/or tandem type, weighing not less than 20,000 pounds each. The rollers shall have adjustable wheel scrapers, water tanks, and sprinkling apparatus to keep the wheels sufficiently wet to prevent the bituminous mixture from sticking to the wheels. Rollers shall be capable of reversing without backlash and shall be free from worn parts. Roller wheels shall not have flat or pitted areas or projections that will leave marks in the pavement.

8.6 Pneumatic-Tired Rollers shall be self-propelled and shall consist of two axles on which are mounted multiple pneumatic-tired wheels in such manner that the rear group of wheels will not follow in the tracks of the forward group but spaced to give essentially uniform coverage with each pass. Axles shall be mounted in a rigid frame provided with a loading platform or body suitable for ballast loading. Tires shall be smooth and capable of being inflated to at least 90 p.s.i. Construction of roller shall be such that each wheel can be loaded to a minimum of 4,500 pounds.

9. TREATMENT OF UNDERLYING SURFACE. Prior to laying a bituminous course, the underlying surface shall be cleaned of loose and foreign matter by sweeping with power sweepers, power brooms, and hand brooms, as directed. The surface to be paved shall receive a prime coat conforming to the requirements of the section: PRIME COAT.

10. TRANSPORTATION OF BITUMINOUS MIXTURE. The bituminous mixture shall be transported from the mixing plant to the site in trucks having tight, clean, smooth bodies with a minimum coating of concentrated solution of hydrated lime and water to prevent adhesion of the mixture. Each load of mixture shall be covered with canvas or other suitable material to protect the mixture from the weather and to prevent loss of heat. Mixtures having temperatures greater than 350 degrees, mixtures having temperatures less than 235 degrees, or mixtures which form or show indications of moisture will be rejected. Hauling over freshly laid material will not be permitted.

11. PLACING. Contact surfaces of previously constructed pavement, curbs, manholes, and other structures shall be sprayed with a thin coat of asphalt. The mechanical spreader shall be adjusted and its speed regulated so that the surface of the course being placed will be smooth and continuous without tears and pulling. The course will be of such depth that after compaction, the cross section, grade, and contour will be as indicated. In areas where the use of machine spreading is impractical, the mixture shall be spread by hand. Unless otherwise directed, placing shall begin on the high side of areas with a one-way slope or along the centerline of areas with a crowned section and shall be in the direction of the main traffic flow. Placing of the mixture shall be as continuous as possible, and the speed of placing shall be adjusted, as directed, to permit proper rolling.

12. COMPACTION OF MIXTURE shall be accomplished by steel-wheel and pneumatic tired rollers. Rolling shall begin as soon after placing as the mixture will support the roller without undue displacement. Rolling of the course shall be continued until all roller marks are eliminated and at least 95 percent of the density of a laboratory specimen of the same mixture has been obtained. The speed of the rollers at all times shall be slow enough to avoid displacement of the hot mixture. The wheels of the roller shall be moistened to prevent adhesion of the mixture. In areas not accessible to the roller, the mixture shall be compacted with hot hand tampers.

13. JOINTS. The joints between old and new pavements or between lanes of new work shall be constructed so as to insure uniform bond, texture, density, and smoothness as in other sections of the course. Edges of existing pavement shall be cut to straight, vertical surfaces. All contact surfaces of existing pavement shall be painted with a thin, uniform coat of asphalt conforming to section: TACK COAT.

14. PROTECTION OF PAVEMENT. After final rolling, no vehicular traffic shall be permitted on the pavement for at least 6 hours after rolling.

15. SURFACE REQUIREMENTS. The finished surface shall not vary more than 1/4 inch from a 10-foot straightedge. The straightedge shall be furnished by the Contractor. Defective areas shall be corrected by the Contractor at no additional cost to the Government.

16. SAMPLING. Sampling for the determination of thickness and density of the completed pavements will be performed by the Contracting Officer. All tests necessary to determine conformance with the specified requirements will be performed by the Contracting Officer without cost to the Contractor. The Contractor shall replace the pavement where samples are removed at his expense. No payment will be made for areas of pavement deficient in composition, density, or thickness until they are removed and replaced by the Contractor as directed by the Contracting Officer.

* * * * *

SECTION 9H

PLAYING SURFACES FOR OUTDOOR SPORTS FACILITIES

Index

1. Applicable Publications
2. Clearing and Grubbing
3. Excavation, Trenching, and Backfilling for Utilities
4. Excavation and Backfilling for Wood Playing Surfaces and Fixtures
5. Grading
6. Grade and Surface-Smoothness Requirements
7. Drainage
8. Provision for Special Athletic Fixtures
9. Natural Turf Playing Surfaces
10. Sand-Clay Playing Surfaces
11. Bituminous Concrete Playing Surfaces
12. Portland Cement Concrete Playing Surfaces
13. Court Lines and Restriction Markings
14. Maintenance of Turf and Sand-Clay Surfaces

1. APPLICABLE PUBLICATIONS. The following publications of the issues listed below, but referred to thereafter by basic designation only, form a part of this specification to the extent indicated by the references thereto.

1.1 Federal Specifications.

SS-A-281b & Am-1	Aggregate; (for) Portland-Cement-Concrete
SS-C-1960/GEN	Cement and Pozzolan, General Requirements for
SS-C-1960/3	Cement, Portland
TT-P-25E & Am-1	Primer Coating, Exterior (Undercoat for Wood, Ready-Mixed, White and Tints)
TT-P-102D	Paint, Oil Alkyd (Modified), Exterior. Fume Resistant, Ready Mixed, White and Tints
TT-W-00571J (AGR-AFS)	Wood Preservation: Treating Practices
TT-W-572B & Am-1	Wood Preservative: Water-Repellent

2. CLEARING AND GRUBBING, where required, shall conform to section: EARTHWORK.

3. EXCAVATION, TRENCHING, AND BACKFILLING FOR UTILITIES, where required, shall conform to section: EXCAVATION, TRENCHING, AND BACKFILLING FOR UTILITIES SYSTEMS.

4. EXCAVATION AND BACKFILLING FOR WOOD PLAYING SURFACES AND FIXTURES shall incorporate, where required, soil poisoning as specified in section: EXCAVATION, FILLING, AND BACKFILLING FOR BUILDINGS.

5. GRADING shall conform to sections: EARTHWORK and ESTABLISHMENT OF TURF as modified herein: Fills required to bring the subgrade of playing surfaces up to required elevation shall be placed in horizontal layers of not more than 8 inches in loose thickness. Each layer shall be compacted by rolling with an approved tamping roller or a three-wheel roller to at least 90 percent CE 55 maximum density. The upper layer of all fills and excavated areas under the playing surfaces shall be compacted to 95 percent CE 55 maximum density.

6. GRADE AND SURFACE-SMOOTHNESS REQUIREMENTS.

6.1 Turf and Sand-Clay Playing Surfaces. The finished surfaces of all turf and sand-clay playing surfaces shall be not more than 0.1 foot below the grade indicated. Control shall be maintained by means of string line stretched between grade pins set by the Contractor at points as directed.

6.2 Bituminous and Concrete Playing Surfaces. The finished surfaces shall conform to the true grade and line shown on the drawings.

6.2.1 Control of horizontal bituminous and concrete playing surfaces shall be maintained by means of forms securely staked around the perimeter of each individual playing area to be surfaced. Forms shall be of wood or steel, straight, free from warp, of sufficient strength to resist springing during construction, and of height equal to the full depth of the finished surfacing. Wood forms shall be of 2-inch surface plank. Metal forms shall be of approved section with a flat top surface and a base width equal to the height of the form. Forms shall be set with the upper edge true to line and grade and shall be held rigidly in place by stakes placed on the outside of forms and set flush with the top edge of the form. The top surface of the forms when set to line and grade shall not vary more than 1/8 inch from a true plane.

6.2.2 Tests for Surface Smoothness. The finished surface of all bituminous and concrete playing surfaces shall be tested with approved 10-foot straightedges to reveal all surface irregularities exceeding the tolerances specified hereinafter. In testing the finished surfaces, the straightedges shall be held parallel with the grade or transverse slope and in contact with the surface, and moved ahead one-half the length of the straightedge for each successive series of measurements. The entire playing surface between perimeter forms shall be tested in both a longitudinal and transverse direction on parallel lines 5 feet apart or less.

6.2.3 Tolerances. All areas of bituminous and concrete playing surfaces that deviate by more than 1/8 inch from the testing edge of the 10-foot straightedge shall be corrected by approved methods as required. Finished bituminous surfaces shall be checked as soon as practicable by sprinkling the area with water. If puddles are present, the pavement surface shall be corrected as required to eliminate standing water. When sufficiently cured, finished portland cement concrete surfaces shall be checked by sprinkling the area with water. If puddles remain, the pavement surface shall be corrected by grinding as required to eliminate standing water.

7. DRAINAGE shall consist of surface drains, subdrains, and drainage filter course, as indicated.

7.1 Surface Drains, in addition to drains produced by the grading or warping of the finished surfaces of playing areas, shall consist of sodded or paved gutters or ditches with pipe or culverts, where required, to carry water under walks or roadways crossing the surface drainage, and shall include gratings or other inlets as indicated. Areas around inlets into which gutters or ditches discharge shall be protected by paving where so indicated. Gutters shall be dished and sodded or otherwise protected from erosion. The sides of drainage ditches shall be cut back to the angle of repose suitable for the class of soil in which the ditches occur. Turfed sides of drainage ditches shall be suitable for mowing, as indicated. Culverts and surface inlets to storm drains shall conform to section: STORM-DRAINAGE SYSTEM unless otherwise indicated. Connections to all existing storm drains and the locations and sizes of culverts and surface inlets shall be as indicated. The gratings of any existing surface inlets shall be raised or lowered to conform to the proposed finished grades.

8. PROVISION FOR SPECIAL ATHLETIC FIXTURES. During the process of establishing the subgrade and prior to the placing of topsoil or surfacing of playing areas, suitable provison shall be made for the installation of all fixed or removable appurtenances and special athletic fixtures, and for any subsurface construction required in connection therewith, as indicated, whether or not such fixtures are to be furnished under this section of the specifications. Such subsurface construction shall be accurately installed in accordance with the drawings or as directed.

9. NATURAL TURF PLAYING SURFACES shall consist of well-established, grassed areas having a thickly matted root growth of selected grasses best suited to the climate, locality, and the type of outdoor sport, and shall be obtained by seeding, sodding, or by sprigging, or any combination of these methods best adapted to the early development of a satisfactory turf, together with such fertilizing, liming, mulching, and watering as may be necessary to establish and maintain the growth of such turf. Seeding, sodding, or sprigging, and mulching shall be done in accordance with section: TURF.

10. SAND-CLAY PLAYING SURFACES shall consist of a stone foundation course, a clay foundation course, a wearing course, and, where required, a drainage filter course hereinbefore specified, all constructed on the prepared subgrade.

10.1 Stone Foundation Course. A layer of crushed stone 3/4-inch to 1-1/2-inch shall be spread over the subgrade or over the drainage filter course constructed thereon, and shall be given preliminary compaction by rolling, follwed by a filler consisting of crushed stone 1/4- to 1/2-inch to be spread in sufficient quantity to fill voids in the underlying stone. This filler stone shall be wetted sufficiently and thoroughly rolled into the voids using a power roller of approved weight. After final compaction, the stone foundation course shall be not less than 3 inches in thickness.

10.2 Clay Foundation Course. Selected inorganic fat clay with high plasticity (CH), well screened through a 1-inch mesh screen, shall be evenly spread on the stone foundation course in sufficient quantity to produce a layer not less than 3 inches thick after thorough compaction by rolling.

10.3 Wearing Course shall consist of a carefully selected and approved clay-silt mixture, approximately 50 percent each of clay and silt, screened free of gravel through a 1/4-inch mesh screen. The Contractor shall furnish samples of the size required by the Contracting Officer of materials intended for use, and these samples will be analyzed and compared with analyses of accepted local materials. The materials to be used shall be thoroughly mixed by approved

methods with clean sharp sand screened through a 1/8-inch mesh screen, in the proportion of 1 part sand to 2 parts clay silt by volume. This sand-clay-silt mixture shall be evenly spread on the foundation to form the playing-surface course, which, after thorough compaction by rolling, shall range from not less than 1 inch to 1-1/2 inches in thickness. The surfaces shall then be screeded off and worked to an accurate plane in accordance with the levels and grades indicated as appropriate for the athletic facilities for which the surfaces are to be used.

11. BITUMINOUS CONCRETY PLAYING SURFACES shall consist of a base course, a prime coat, bituminous leveling and surface courses, a tack coat, a color coating, and, where required, the drainage filter course hereinbefore specified, all constructed on a prepared subgrade.

11.1 Base Courses of all bituminous concrete playing surfaces shall conform to section: AGGREGATE BASE as modified herein.

11.1.1 Materials. Uncrushed gravel may be used.

11.1.2 Gradation No. 3 shall be used. Grading requirements shall apply to the mixed materials prior to placing and compaction.

11.1.3 Liquid Limit and Plasticity-Index Requirements shall apply to that portion of the mixed material passing the No. 40 sieve prior to placing and compacting. The liquid limit shall not be greater than 30 and the plasticity index shall not exceed 9.

11.1.4 Rolling. Power rolers weighing not less than 5 tons may be used for compacting this base course when types and weight of rollers specified in section: AGGREGATE BASE are not economically available. Rolling shall continue until the layer through the full depth is compacted to at least 95 percent CE 55 maximum density.

11.2 Prime Coat. Prior to the placing of the leveling course, the completed base course shall be primed to conform to section: PRIME COAT.

11.3 Leveling and Surface Courses of all bituminous concrete playing surfaces shall conform to applicable portions of section: ASPHALT CONCRETE (CENTRAL- PLANT HOT-MIX), as modified herein.

11.3.1 Composition of the Bituminous Mixtures shall be the same for both the leveling and surface courses and shall consist of aggregates and asphalt cement within the limits set forth in the following table.

Bituminous mixture	Sieve designation (square openings)	Percentage by weight (passing) 3/8-inch maximum
Aggregate	3/8 inch	100
	No. 4	78-100
	No. 8	60-87
	No. 16	45-73
	No. 30	32-58
	No. 50	21-43
	No. 100	12-28
	No. 200	6-12
Residual asphalt percentage		6-11

The quantities of asphalt are the residual binder content required, and these quantities apply directly to asphalt cements but do not include solvents or water that is contained in liquid or emulsified asphalts.

11.3.2 Bituminous Mixtures shall be manufactured in accordance with the approved job-mix formula furnished by the Contractor prior to commencement of paving operations. The approved job-mix formula shall allow the tolerances specified in section: ASPHALT CONCRETE (CENTRAL-PLANT HOT-MIX). The requirements regarding Marshall-test properties for surface- and binder-course mixtures will not apply to bituminous concrete mixes used in paving playing surfaces.

11.3.3 Mixing-Plant Requirements of section: ASPHALT CONCRETE (CENTRAL-PLANT HOT-MIX) will be waived where satisfactory data are submitted indicating that the plant proposed by the Contractor will produce asphaltic-concrete mixtures that will meet the requirements of the applicable section of these specifications.

11.3.4 Compaction of Mixtures in Each Course shall be in accordance with applicable requirements of section: ASPHALT CONCRETE (CENTRAL-PLANT HOT-MIX), except that rollers weighing not less than 5 tons may be used. Rolling shall continue until the voids in the total mix are reduced to less than 4.0 percent.

11.4 Tack Coat. Prior to the placing of the surface course, a tack coat shall be applied to the completed leveling course in accordance with section: TACK COAT.

11.5 Thickness of Base, Leveling, and Surface Courses.

11.5.1 Base Course shall be 4 inches thick unless indicated otherwise.

11.5.2 Leveling Course shall be 1-1/2 inches thick.

11.5.3 Surface Course shall be 1 inch thick unless indicated otherwise.

11.6 Color Coating and Marking Paint. After curing of the bituminous surface course for the number of days recommended by the manufacturer, the entire playing surface shall be covered with color coating spread in accordance with the manufacturer's instructions. Application shall be made when the temperature is above 55°F. and rain is not imminent. The coating shall brush easily, have good spreading characteristics, and be suitable for application with wide hair-type brooms. The coating shall not stain or discolor tennis balls nor be scuffed off under foot in normal playing 24 hours after application. Playing lines shall be marked with white marking paint having the same characteristics and performance as the color coating except that the paint shall be suitable for application by spray equipment. Both the coating and the paint shall consist of resin water emulsion with pigments, such as titanium dioxide, extender, light-fast tinting or color pigments, and with additives as needed such as dispersants, antifoaming agents, and preservatives. Coating and paint shall be suitable for use over all types of asphaltic and emulsified asphaltic surfaces. Neither the coating nor the paint shall cause lifting, crazing, peeling, or other damage to the bituminous surface, nor shall the asphalt bleed through or react with the color coating. The coating and the paint shall be of a formulation that has had a satisfactory service record for at least three years under climatic conditions similar to those at the project site and for similar use.

12. PORTLAND CEMENT CONCRETE PLAYING SURFACES shall be class B concrete conforming to section: CONCRETE as modified herein, constructed either on a prepared subgrade or over a drainage course, as indicated, in the case of horizontal playing surfaces. Concrete handball walls, if included, shall be made of reinforced concrete with class of concrete, reinforcing, foundations, forms, and bracing in accordance with section: CONCRETE.

12.1 Aggregate shall conform to Federal Specification SS-A-281, class 1 or 2. The nominal size shall be 1-1/2 inches to No. 4 sieve size.

12.2 Portland Cement shall conform to Federal Specification SS-C-1960/3, type IA and IIA.

12.3 Thickness. Horizontal portland cement concrete playing surfaces shall consist of concrete slabs 4 inches thick unless otherwise indicated. Vertical portland cement concrete playing surfaces such as handball walls, if included, shall be 8 inches thick.

12.4 Surface Finish for all portland cement concrete playing surfaces shall conform to section: CONCRETE. The surface finish for courts shall be monolithic finish, except that the second steel-troweling to a burnished finish shall be omitted on horizontal surfaces other than shuffleboard courts. The surface finish for throwing circles shall be nonslip finish. Vertical playing surfaces of handball walls shall have a rubbed finish.

12.5 Curing of portland cement concrete playing surfaces shall conform to section: CONCRETE.

13. COURT LINES AND RESTRICTION MARKINGS shall be as specified hereinbefore for bituminous surfaces, or shall be as indicated or as directed for other surfaces, and shall be applied with the type of paint or other marking material best adapted for a weather-resistant and durable marking on the particular type of playing surface. Court lines for multiple court areas shall be applied with different colors as directed by the Contracting Officer.

14. MAINTENANCE OF TURF AND SAND-CLAY SURFACES. After the completion of construction and prior to acceptance by the Contracting Officer, the Contractor shall maintain turf and sand-clay surfaces in the following manner.

14.1 Turf. Turfed areas shall be periodically watered, rolled, mowed, chemically weeded without injury to trees, shrubs, or other vegetation, and shall be fertilized as directed until a satisfactory weed-free growth has been established.

14.2 Sand Clay. The Contractor shall conduct daily maintenance operations, including brooming, dragging, sprinkling, and rolling, as directed until the sand-clay surface is thoroughly worked to an accurate, consolidated, acceptable finish. Prior to final acceptance, the Contractor shall make one application of 3/4 pound of calcium chloride per square yard to the sand-clay of the entire playing area.

* * * * *

SECTION 9I

PRECAST CONCRETE FLOOR (HANDBALL COURTS)

Index

1. Applicable Publications
2. General
3. Design and Fabrication
4. Shop Drawings and Placing Drawings
5. Concrete Quality Control
6. Tests and Test Reports
7. Installation

1. APPLICABLE PUBLICATIONS. The following publications of the issues listed below, but referred to thereafter by basic designation only, form a part of this specification to the extent indicated by the references thereto.

1.1 American Concrete Institute (ACI), Standards.

ACI 318-63	Building Code Requirements for Reinforced Concrete
ACI 512-67	Recommended Practice for Manufactured Reinforced Concrete Floor and Roof Units

2. GENERAL. The work shall be in accordance with ACI 512, all portions of which are mandatory unless otherwise indicated or specified. Prestressed units may be provided. Prestressed concrete including prestressing steel and evaluation of concrete strength tests shall be in conformance with ACI 318. Precast units shall be the product of a concern specializing in providing precast concrete floor and roof units and services associated with precast concrete construction. The units shall be produced under plant-controlled conditions. Units shall be free of fins. Surfaces that will be concealed from view shall be free of surface holes over 1/2 inch in diameter. Surfaces to receive subsequent applications other than painting shall be suitable for the purpose intended and free of any coatings that would interfere with adhesion or bond. Surfaces that will be painted or exposed-to-view shall be smooth, free of form marks or texture, and shall have surface blemishes filled and finished to match adjoining concrete in color and texture.

3. DESIGN AND FABRICATION of the units shall be for the design load conditions and spans indicated and for additional loads imposed by openings or support of the work of other trades. Concrete topping shall (not) be used in establishing the design strength of the units. The sum of the immediate deflection due to live load and additional long-time deflections, as outlined for control of deflections in ACI 318, shall not exceed the deflection limitations indicated.

3.1 Strength Design shall be performed by one of the following.

3.1.1 Structural Analysis. The analysis, complete with detailed computations, shall be performed in accordance with ACI 318 and shall include evaluations of the effects of holes, discontinuities, and concentrated loads as outlined in ACI 512. The method of analysis shall be stated.

3.1.2 Test Method. Units tested shall be representative of the units to be furnished. Deflections shall be established by tests as part of the design.

3.2 Delivery. Units shall be delivered to the jobsite only after they have been completely cured.

4. SHOP DRAWINGS AND PLACING DRAWINGS shall be submitted for approval in accordance with SPECIAL PROVISIONS and shall show the information required by ACI 512. The drawings shall additionally show the precast unit manufacturer's recommended details and materials for the work required by paragraph INSTALLATION and as follows:

Anchorage for work or other trades;

Anchorage to supporting construction if required by the design;

Headers for openings where additional structural work is required;

Joints between units and between units and other construction;

Reinforcing including prestressing steel details;

Minimum concrete compressive strengths at initial prestress and 28 days, and initial prestress to be applied;

Shoring unless structural computations are submitted showing that allowable concrete stresses during the work will not be exceeded when shoring is not used.

Shop drawings shall be accompanied by the structural analysis or test reports specified.

5. CONCRETE QUALITY CONTROL. Compressive strength tests shall be made on concrete specimens of the same mix used in manufacturing units delivered to the jobsite and cured in the same manner as the units furnished.

6. TESTS AND TEST REPORTS. Tests required in paragraph CONCRETE QUALITY CONTROL, and for units designed by procedure in paragraph Test Method, shall be performed by an independent commercial testing laboratory except that compressive-strength tests for initial prestress may be performed in the manufacturer's plant laboratory. Tests shall be performed at no additional cost to the Government. Certified copies of test reports shall be furnished and shall include all test data and results.

7. INSTALLATION shall be according to the approved shop and placing drawings.

7.1 Bearing Surfaces shall be level and free from irregularities. Irregularities in masonry bearing surfaces shall be leveled with a stiff cement mortar. Mortar shall be allowed to harden before installing the units. Units shall be installed at right angles to bearings, drawn up tight without forcing or distortion, and with sides plumb. Slab ends shall be alined. Underside of slabs shall present true ceiling surface.

7.2 Grouting. Where shown on approved shop drawings, the keyways between units and other spaces shall be cleaned and filled solidly with grout. Grout that may have seeped through to surfaces in spaces below shall be removed before hardening.

7.3 Calking. Joints in ceilings that will be exposed-to-view or painted shall be calked with nonstaining, nonshrinking sealant.

7.4 Concrete Topping shall be applied to tops of floor (and roof) slabs continuous over the entire span. Tops of slabs shall be clean and free of any material that would adversely affect bond. The concrete topping shall be a minimum of 2 inches thick and of compressive strength used by the manufacturer in establishing the design strength of the units, but not less than 3,000 p.s.i. at 28 days. Concrete materials, quality, mixing, placing, and curing shall be in conformance with ACI Standard 318. Toppings shall be reinforced with welded wire mesh fabric or longitudinal wires not lighter than 12 gage spaced not over 4 inches on centers and of transverse wires not lighter than 10 gage and spaced not over 12 inches on centers. Mesh shall be placed with longitudinal wires transverse to span of units. Concrete shall be finished, suitable for the intended purpose, to true plane surfaces within a tolerance of 1/8 inch in 10 feet as determined with a 10-foot straightedge. Oil- or wax-base curing compounds shall not be used.

7.5 Loading. After installation, care shall be taken to avoid the storage of construction materials or imposing other loads that would overload the precast units.

* * * * *

SECTION 9L

PAVEMENT MARKINGS

Index

1. Applicable Publications
2. Materials
3. Sampling and Testing
4. Equipment
5. Surface Preparation
6. Application

1. APPLICABLE PUBLICATIONS. The following publications of the issues listed below, but referred to thereafter by basic designation only, form a part of this specification to the extent indicated by references thereto.

1.1 Federal Specifications (Fed. Spec.).

TT-P-85D & Am-1	Paint, Traffic: Reflectorized for Airfield Runway Marking (Drop-on Type)
TT-P-115E	Paint, Traffic, Highway, White and Yellow

1.2 Federal Standard (Fed. Std.).

No. 141a & Change Notices 1, 2, 3, 4	Paint, Varnish, Lacquer, and Related Materials; Methods of Inspection, Sampling, and Testing

2. MATERIALS. Paint and reflective media shall be in sealed containers that plainly show the designated name, formula or specification number, batch number, color, date of manufacturer, manufacturer's name, formulation number and directions, all of which shall be plainly legible at time of use. The paint shall be homogeneous, easily stirred to smooth consistency, and shall show no hard settlement or other objectionable characteristics during a storage period of six months.

2.1 Paints. Paints shall conform to Fed. Spec. TT-P-115 or TT-P-85, color as required.

3. SAMPLING AND TESTING. Materials proposed for use shall be stored on the project site in sealed and labeled containers, or segregated at source of supply, sufficiently in advance of needs to allow 60 days for testing. Upon notification by the Contractor that the material is at the site or source of supply, a quart sample of each batch, paint and reflective media shall be taken by random selection from sealed containers by the Contractor in the presence of a representative of the Contracting Officer. Contents of the sampled containers shall be so thoroughly mixed as to render the sample truly representative. Samples shall be clearly identified by designated name, specification number, batch number, manufacturer's formulation number, project contract number, intended use, and quantity involved. At the discretion of the Contracting Officer, samples may be tested by the Government before approval, or material may be approved for use based on either of the following data furnished by the Contractor:

a. A test report showing that the proposed batch meets all specified requirements.

b. A test report showing that a previous batch manufactured using the same formulation as that used in manufacturing the proposed batch met all specified requirements, and a report showing test results on the proposed batch for the following properties required in the material specification: weight per gallon, viscosity, fineness of grind, drying time, and gradation. Testing procedures and reports shall be as specified in paragraph 5 of Method 1031.2 of Fed. Std. 141. If materials are approved based on reports furnished by the Contractor, samples will be retained by the Government for possible future testing should the material appear defective during or after application. When tested by the Government and samples fail to meet specification requirements, the materials represented by the samples shall be replaced and the cost of testing will be deducted from the payments due the Contractor at the rate of $100 per sample retested.

4. EQUIPTMENT. All machines, tools, and equipment used in performance of the work shall be approved and maintained in satisfactory operating condition

4.1 Paint Applicator. The equipment for applying paint to pavements shall be self-propelled or mobile-drawn pneumatic spraying machine with suitable arrangements of atomizing nozzles and controls to obtain the specified results. The machine shall have a speed during application not less than 5 m.p.h., and shall be capable of applying the stripe widths indicated, at the paint coverage rate specified in paragraph: APPLICATION, and of even uniform thickness with clear-cut edges. Equipment shall be capable of placing the prescribed number of lines at a single pass as solid lines, intermittent lines or a combination of solid and intermittent lines using a maximum of three different colors of paint as specified.

The paint applicator shall have paint reservoirs or tanks of sufficient capacity and suitable gages to apply paint in accordance with requirements specified. Tanks shall be equipped with suitable air-driven mechanical agitators. The spray mechanism shall be equipped with quick action valves conveniently located, and include necessary pressure regulators and gages in full view and reach of the operator. Paint strainers shall be installed in paint supply lines to insure freedom from residue and foreign matter than may cause malfunction of the spray guns. The paint applicator shall be readily adaptable for attachment of an air actuated dispenser for the reflective media approved for use. Pneumatic spray guns shall be provided for hand application of paint in areas where the mobile paint applicator cannot be used.

5. SURFACE PREPARATION. New pavement surfaces shall be allowed to cure for a period of not less than 30 days before application of marking materials. All surfaces to be marked shall be thoroughly cleaned before application of the paint. Dust, dirt, and other granular surface deposits shall be removed by sweeping, blowing with compressed air, rinsing with water or a combination of these methods as required. Rubber deposits, surface laitance, existing paint markings, and other coatings adhering to the pavement shall be completely removed with scrapers, wire brushes, sandblasting, approved chemicals, or mechanical abrasion as directed. Where oil or grease are present on old pavements to be marked, affected areas shall be scrubbed with several applications of trisodium phosphate solution or other approved detergent or degreaser, and rinsed thoroughly after each application. After cleaning, oil-soaked areas shall be sealed with cut shellac to prevent bleeding through the new paint.

6. APPLICATION.

6.1 Rate Of Application.

6.1.1 Non-Reflective Markings. Paint shall be applied evenly to the pavement surface to be coated at a rate of 105 plus or minus 5 square feet per gallon.

6.2 Paint. Paint shall be applied to clean, dry surfaces, and unless otherwise approved, only when air and pavement temperatures are above 40 F and less than 95 F. Paint temperature shall be maintained within these same limits. Paint shall be applied pneumatically with approved equipment at rate of coverage specified herein. The Contractor shall provide guide lines and templates as necessary to control paint application. Special precautions shall be taken in marking numbers, letters, and symbols. All edges of markings shall be sharply outlined. The maximum drying time requirements of the paint specifications will be strictly enforced, to prevent undue softening of bitumen, and pickup, displacement, or discoloration by tires of traffic. If there is a deficiency in drying of the markings, painting operations shall be discontinued until cause of the slow drying is determined and corrected.

6.3 Traffic Controls. Suitable warning signs shall be placed near the beginning of the worksite and well ahead of the worksite for alerting approaching traffic from both directions. Small markers shall be placed along newly painted lines to control traffic and prevent damage to newly painted surfaces. Painting equipment shall be marked with large warning signs indicating slow-moving painting equipment in operation.

* * * * *

SECTION 10A

TURF

Index

1. Applicable Publications
2. Submittals
3. Delivery, Storage, and Handling
4. Environmental Protection
5. Materials
6. Installation
7. Turf Establishment Period
8. Final Acceptance

1. APPLICABLE PUBLICATIONS. The following publications of the issues listed below, but referred to thereafter by basic designation only, form a part of this specification to the extent indicated by the references thereto.

1.1 Federal Specifications (Fed. Spec.).

O-F-241D	Fertilizers, Mixed, Commercial

1.2 U.S. Department of Agriculture Federal Seed Act of August 9, 1939.

53 Stat. 1275	Rules and Regulations

2. SUBMITTALS.

2.1 Certificates of Conformance or Compliance. Before delivery, notarized certificates attesting that the following materials meet the requirements specified, shall be submitted in triplicate, for approval.

a. Seed

b. Fertilizer

2.2 Manufacturer's Literature. Manufacturer's literature on hydro-mulch shall be submitted.

3. DELIVERY, STORAGE, AND HANDLING.

3.1 Delivery.

3.1.1 The Contractor shall notify the Contracting Officer of the delivery schedule in advance so material may be inspected upon arrival at the jobsite. Unacceptable material shall be removed from the jobsite immediately.

3.1.2 During delivery, seed shall be protected from drying out and contamination.

3.1.3 Fertilizer and soil sulphur shall be delivered to the site in the original, unopened containers bearing the manufacturer's guaranteed chemical analysis, name, trade name, trademark, and conformance to State and Federal laws. In lieu of containers, fertilizer and soil sulphur may be furnished in bulk and a certificate indicating the above information shall accompany each delivery.

3.2 Storage.

3.2.1 Seed, soil sulphur, and fertilizer shall be kept in dry storage away from contaminants.

3.2.2 Soil sterilant shall not be stored with any other landscape materials.

3.2.3 Storage of materials shall be in areas designated or as approved.

4. ENVIRONMENTAL PROTECTION. All work and Contractor operations shall comply with the requirements of section: ENVIRONMENTAL PROTECTION.

5. MATERIALS.

5.1 Seed. Seed shall be state-certified seed of the latest season's crop and shall be delivered in original sealed packages bearing the producer's guaranteed analysis for percentages of mixtures, purity, germination, weed-seed content, and inert material. Seed shall be labeled in conformance with U.S. Department of Agriculture rules and regulations under the Federal Seed Act and applicable state seed laws. Seed that has become wet, moldy, or otherwise damaged will not be acceptable.

Name of Grass (Botanical and Common)	Percent by Weight	Percent Germination	Maximum Percent Weed Seed
Cynodon (Bermuda) Dactylon	82%	95%	1%
Lolium (Rye) Multiflorum	82%	95%	1%

5.2 Topsoil.

5.2.1 Topsoil shall be the existing surface soil stripped and stockpiled on the site and amended by the addition of soil sulphur as a pH adjuster at the rate of 1000 lb. per acre and manure as a soil conditioner at the rate of 300 cu. yd. per acre.

5.2.2 If additional topsoil is required, it shall be furnished by the Contractor and shall be a natural, friable soil representative of productive soils in the vicinity. It shall be obtained from well-drained areas and shall be free of admixture of subsoil and foreign matter or objects larger than one inch in any dimension, toxic, substances, and any material or substance that may be harmful to plant growth. The pH range shall be 7.0 to 8.0.

5.3 pH Adjusters.

5.3.1 Soil Sulphur shall be agricultural sulphur containing 99.5% sulphur and 0.5% inert ingredients.

5.4 Soil Conditioners.

5.4.1 Rotted manure shall be unleached stable or cattle manure containing not more than 25% percent by volume of straw, sawdust, or other bedding materials and containing no chemicals or ingredients harmful to plants.

5.5 Fertilizer. Fertilizer shall be commercial grade, free flowing, uniform in composition and shall conform to applicable State and Federal regulations. Granular fertilizer shall conform to Fed. Spec. O-F-241, Type I, Level B, and shall bear the manufacturer's guaranteed statement of analysis. Granular fertilizer shall contain a minimum percentage by weight of 20 nitrogen (of which 50 percent shall be organic), 10 available phosphoric acid, and 10 potash.

5.6 Soil Fumigant. Soil fumigant shall be 97 percent methyl bromide and 3 percent chloropicrin.

5.7 Mulch.

5.7.1 Wood cellulose fiber for use with hydraulic application of grass seed and fertilizer shall consist of specially prepared wood cellulose fiber, processed to contain no growth or germination-inhibiting factors and dyed an appropriate color to facilitate visual metering of the application of materials. On an air-dry weight basis, the wood cellulose fiber shall contain a maximum of 12 percent moisture, plus or minus 3 percent at the time of manufacture. The pH range shall be from 3.5 to 5.0. The wood cellulose fiber shall be manufactured so that:

a. After addition and agitation in slurry tanks with fertilizers, grass seeds, water, and other approved additives, the fibers in the material will become uniformly suspended to form a homogeneous slurry.

b. When hydraulically sprayed on the ground, the material will form a blotterlike cover impregnated uniformly with grass seed.

c. The cover will allow the absorption of moisture and allow rainfall or applied water to percolate to the underlaying soil.

5.8 Manure shall be spread on seed at a rate of one cubic yard/1000 sq. yd. for non-hydraulic applications.

5.9 Water. Water shall contain no elements toxic to plant life and shall be obtained from sources on project site at no cost to the Contractor. The irrigation system installed as part of this contract may be used.

6. INSTALLATION.

6.1 Tillage. After the areas required to be seeded, have been brought to the grades as specified, they shall be thoroughly tilled to a depth of at least 7 inches by scarifying, disking, harrowing, or other approved methods. All debris and stones larger than one inch remaining on the surface after tillage shall be removed.

6.2 Topsoiling. Prior to placing topsoil, the subgrade shall be scarified to a 2-inch depth for bonding of topsoil with subsoil. The topsoil shall be evenly spread to a minimum depth of 3 inches. Topsoil shall not be spread when frozen or excessively wet or dry. Irregularities in finished surfaces shall be corrected to eliminate depressions. Finished topsoil areas shall be protected from damage by vehicular or pedestrian traffic. Seeding shall be accomplished only when areas are brought to finished grade.

6.3 Application of Fertilizer, pH Adjusters, and Soil Conditioners.

6.3.1 Fertilizer shall be applied at the rate of 500 pounds per acre. In addition, the Contractor shall adjust soil acidity and add soil conditioners as specified for suitable topsoil under paragraph "Topsoil".

6.3.2 All fertilizers, pH adjusters, and soil conditioners shall be incorporated into the soil to a depth of at least 7 inches and shall be incorporated as part of the tillage operation herein before specified. Immediately before seeding, the soil shall be restored to an even condition.

6.4 Soil Treatment.

6.4.1 All areas requiring soil fumigation shall be treated with the specified material applied according to the manufacturer's recommendations.

6.5 Planting Seasons and Conditions. Planting shall be done within the following dates:

a. Bermuda Seed shall be sown from May 15th to August 15th.

b. Rye seed shall be sown from September 1 to April 1. Rye seed shall be used at other times for Contractor shall seed multi-purpose fields in either rye or bermuda depending upon season. Other areas shall be seeded in only bermuda.

Planting shall not be done when the ground is in an unsatisfactory condition for planting. If special conditions exist that may warrant a variance in the above planting dates or conditions, a written request shall be submitted to the Contracting Officer stating the special conditions and proposed variance.

6.6 Seeding.

6.6.1 Seed shall be broadcast by approved sowing equipment at the rate of 5 pounds per 1,000 square feet for bermuda and 15 pounds per 1,000 square feet for rye. One half of the seed shall be sown in one direction, and the remainder shall be sown at right angles to the first sowing. The seed shall be covered to an average depth of 1/4 inches by means of spike-tooth harrow, cultipacker, or other approved device.

6.6.2 When hydroseeding, the seed and fertilizer or the seed, fertilizer, and approved mulch material shall be mixed in the required amount of water to produce a homogeneous slurry and then uniformly applied under pressure at the rate of 5 lbs. for bermuda and 15 lbs. for rye per 1,000 square feet (dry weight). When wood cellulose mulch is to be incorporated as an integral part of the slurry mix, it shall be added after the seed and fertilizer have been thoroughly mixed and shall be applied at the rate of 25 pounds per 1,000 square feet (dry weight).

6.6.3 Immediately after seeding, the entire area shall be firmed with a roller not exceeding 90 pounds for each foot of roller width. If seeding is performed with a cultipacker-type seeder or if seed is applied in combination with hydromulching, rolling may be eliminated.

6.6.4 Mulch shall be evenly spread at the rate of 40 cu. yds. per acre.

6.7 Portection of Seeded Areas. Immediately after seeding, the area shall be protected against traffic or other use by erecting barricades, as required, and placing approved signs at appropriate intervals until final acceptance.

6.8 Restoration and Clean-Up. Excess and waste material shall be removed daily. When turfing in an area has been completed, the area shall be cleaned of all debris and excess material. Where existing turf areas have been damaged during turfing operations, the Contractor shall restore the areas to their original condition at his expense.

7. TURF ESTABLISHMENT PERIOD.

7.1 General.

7.1.1 The turf establishment period will be for a period of 90 days after completion of seeding the entire project.

7.1.2 The Contractor shall be responsible for the establishment and proper care of a stand of turf over the entire seeded area.

7.2 Maintenance During the Establishment Period.

7.2.1 The Contractor shall provide the following maintenance: mowing, removal of excess clippings, eradicating weeds, watering, fertilizing, overseeding and any other operation necessary to promote the growth of grass.

7.2.2 The seeded area shall be mowed to a height of 1-1/2 inches whenever the average height of the grass becomes 3 inches.

8. FINAL ACCEPTANCE.

8.1 General. Final inspection and acceptance will be at the end of the turf establishment period. Acceptance will be based upon a satisfactory stand of turf covering at least 95 percent of the seeded areas. Areas larger than 6 square inches that do not have a stand of turf or other areas skipped in seeding operation shall be reseeded as specified hereinbefore. Prior to final acceptance, the Contractor shall apply 3 pounds per 1,000 square feet of a slow release nitrogen fertilizer. Formula for this application shall be 33N-0P-0K.

* * * * *

SECTION 10B

TREES, SHRUBS, GROUND COVERS, AND VINES

Index

1. Applicable Publications
2. Source Inspections
3. Submittals
4. Delivery, Storage, and Handling
5. Deleted
6. Environmental Protection
7. Materials
8. Installation
9. Plant Establishment Period

1. APPLICABLE PUBLICATIONS. The following publications of the issues listed below, but referred to thereafter by basic designation only, form a part of this specification to the extent indicated by the references thereto.

1.1 Federal Specifications (Fed. Spec.).

O-F-241D	Fertilizers, Mixed, Commercial
Q-P-166E	Peat, Moss; Peat, Humus; and Peat, Reed-Sedge

1.2 American National Standards Institute (ANSI) Publication.

Z60.1-1973	Nursery Stock

1.3 American Joint Committee on Horticultural Nomenclature (AJCHN) Publication.

Second Edition-1942	Standarized Plant Names
D 2607-69	Peats, Mosses, Humus and Related Products

1.4 American Wood Preserver's Association (AWPA) Publication.

C2-74 (Rev Apr 76)	Lumber, Timber, Bridge Ties and Mine Ties-Pressure Treatment by Pressure Processes

2. SOURCE INSPECTIONS.

2.1 Plant Materials. Plant materials will be inspected by the Contracting Officer at the growing site and tagged or otherwise approved for delivery. Such inspection does not preclude right of rejection at the project site.

3. SUBMITTALS.

3.1 Samples. The following samples shall be submitted for approval before work is started.

a. Organic Mulch—10 pounds of each type to be used in the project.

3.2 Certificates of Conformance or Compliance. Before delivery, notarized certificates attesting that the following materials meet the requirements specified, shall be submitted for approval and in accordance with SPECIAL PROVISIONS.

a. Plant materials

b. Fertilizers

c. Gravel

d. Decomposed granite

3.3 Manufacturer's Literature. Manufacturer's literature on the following materials shall be submitted.

a. Metal edging

4. DELIVERY, STORAGE, AND HANDLING.

4.1 Delivery.

4.1.1 The Contractor shall notify the Contracting Officer of the delivery schedule in advance so the plant material may be inspected upon arrival at the jobsite. Unacceptable plant material shall be removed from the jobsite immediately.

4.1.2 Plants shall be protected during delivery to prevent damage to the root balls or desiccation of leaves. Trees shall be protected during transportation by tying in the branches and covering all exposed branches.

4.1.3 The use of equipment such as "tree spades" shall be permitted provided that the plant balls are sized in accordance with ANSI Z60.1 and tops are protected from damage.

4.1.4 Fertilizer and Soil Sulphur shall be delivered to the site in the original, unopened containers bearing the manufacturer's guaranteed chemical analysis, name, trade name or trademark, and in conformance to State and Federal law. In lieu of containers, fertilizer and soil sulphur may be furnished in bulk and a certificate indicating the above information shall accompany each delivery.

4.2 Storage.

4.2.1 Plants not installed on the day of arrival at the site shall be stored and protected as follows.

a. Outside storage shall be shaded and protected from the wind.

b. Plants stored on the project shall be protected from drying out at all times by covering the balls or roots with moist sawdust, wood chips, shredded bark, peat moss, or other similar mulching material.

c. Plants, including those in containers, shall be kept inaa moist condition until planted by watering with a fine mist spray.

4.2.2 Soil Sulphur and fertilizer shall be kept in dry storage away from contaminants.

4.2.3 Soil sterilant and herbicides shall not be stored with any other landscape materials.

4.2.4 Storage of materials shall be in areas designated or as approved by the Contracting Officer.

4.3 Handling. Care shall be taken to avoid damaging plants being moved from the nursery or storage area to the planting site. Plants shall be protected from drying out. Plants shall not be handled by the trunk or stems. Plants shall be protected from freezing or drying out by a covering of burlap, tarpaulin, or mulching material during transportation from the heeling-in bed to the planting site. Damaged plants will be rejected and shall be removed from the site.

5. DELETED.

6. ENVIRONMENTAL PROTECTION. All work and Contractor operations shall comply with the requirements of section ENVIRONMENTAL PROTECTION.

7. MATERIALS.

7.1 Plants.

7.1.1 Plants shall conform to the varieties specified in the plant list and be true to botanical names as listed in AJCHN Standarized Plant Names. Plants shall be in accordance with ANSI Z60.1 except as otherwise stated in the specifications or shown on the plans. Where the drawings or specifications are in conflict with ANSI Z60.1, the drawings and specifications shall prevail.

7.1.2 Planting stock shall be well-branched and well-formed, sound, vigorous, healthy, and free from disease, sun-scald, windburn, abrasion, and harmful insects or insect eggs and shall have healthy, normal and unbroken root systems. Deciduous trees and shrubs shall be symmetrically developed, of uniform habit of growth, with straight boles or stems and free from objectionable disfigurements. Evergreen trees and shrubs shall have well developed symmetrical tops with typical spread of branches for each particular species or variety. Ground covers shall be vigorous, have the number and length of runners and clump size specified, and be the proper age for the grade of plants specified. Only ground cover plants well established in removable containers, integral containers, or formed homogeneous soil sections shall be used. Plants shall have been grown under climatic conditions similar to those in the locality of the project. Plants budding into leaf or having soft growth shall be sprayed with an anti-desiccant at the nursery before digging.

7.1.3 The minimum acceptable sizes of all plants, measured before pruning and with branches in normal position, shall conform to the measurements indicated. Plants larger in size than specified may be used with the approval of the Contracting Officer, with no change in the contract price. If larger plants are used, the ball of earth or spread of roots shall be increased in accordance with ANSI Z60.1.

7.1.4 The Contractor shall facilitate inspection and identification by labeling trees and bundles or containers of the same shrub, ground cover, or vine with a durable waterproof label and weather-resistant ink. Labels shall state the correct plant name and size as specified in the list of required plants. Label shall be securely attached to plants, bundles, and containers of plants and shall be legible for 60 days after delivery to the planting site.

7.1.5 Plant material shall be nursery grown unless otherwise indicated and shall conform to the requirements and recommendations of ANSI Z60.1. Plants shall be dug and prepared for shipment in a manner that will not cause damage to branches, shape, and future development after planting.

7.1.5.1 Container grown plants shall have sufficient root growth to hold the earth intact when removed from containers but shall not be root bound.

7.1.6 Substitutions shall be made only when a plant is not obtainable and the Contracting Officer authorizes a change order providing for use of the nearest equivalent obtainable size or variety of plant having the same essential characteristics with an equitable adjustment of the contract price. If all other requirements are met, any plant may be furnished.

a. Container-grown instead of balled or burlapped.

7.2 Topsoil.

7.2.1 Topsoil shall be the existing surface soil stripped and stockpiled on the site.

7.2.2 If additional topsoil is required, it shall be furnished by the Contractor and shall be a natural, friable soil representative of productive soils in the vicinity. It shall be obtained from well-drained areas and shall be free of admixture of subsoil and foreign matter or objects larger than one inch in any dimension, toxic substances, and any material or substances that may be harmful to plant growth. The pH range shall be 7.0 to 8.0. Topsoil that does not meet this pH range shall be amended by the addition of pH adjusters. Soluble salts shall not exceed 1,000 ppm.

7.3 pH Adjusters.

7.3.1 Soil Sulphur shall be agricultural grade, containing 99.5% sulphur an 0.5% inert ingredients.

7.4 Soil Conditioners.

7.4.1 Peat shall be a natural product of sphagnum moss peat reed-sedge peat derived from a freshwater site conforming to ASTM D 2007 except as otherwise specified herein. Peat shall be shredded and granulated to pass a 1/2-inch mesh screen and conditioned in storage piles for at least 6 months after excavation.

7.4.2 Sand shall be clean and free of toxic materials.

7.4.3 Rotted manure shall be unleached stable or cattle manure containing not more than 25 percent by volume of straw, sawdust, or other bedding materials and containing no chemicals or ingredients harmful to plants.

7.5 Planting Soil Mixture. The planting soil mixture shall be as shown on drawings.

7.6 Fertilizer. Fertilizer shall be commercial grade and uniform in composition and shall conform to applicable State and Federal regulations.

7.6.1 Granular fertilizer shall conform to Fed. Spec. O-F-241, Type I, Level B, and shall bear the manufacturer's guaranteed statement of analysis. Granular fertilizer shall contain a minimum percentage by weight of: 16 nitrogen (of which 50 percent shall be organic), 20 available phosphoric acid, and 0 potash.

7.6.2 With the approval of the Contracting Officer, packet, tablet, pellet, or other forms of slow release fertilizers may be used.

7.7 Membranes.

7.7.1 Polyethylene shall conform to ASTM D 2103 and shall be 6 mil thick and black in color.

7.8 Mulch. Mulch shall be free from deleterious materials and shall be stored so as to prevent inclusion of foreign materials.

7.8.1 Organic mulch materials shall be ground or shredded bark and shall range in size from 1/4" to 3/4".

7.9 Staking Material.

7.9.1 Stakes for tree support shall be as shown on drawings.

7.10 Edging Material.

7.10.1 Metal edging shall be galvanized steel or aluminum with slots provided for stakes and shall be 1/4 inch thick and 5 inches deep in 20-foot lengths. Steel edging shall be treated with rust preventative and factory finished in color green. Anchoring stakes shall be of similar material and 16 to 18 inches long and tapered.

7.11 Water. Water shall not contain elements toxic to plant life. It shall be obtained from project site or from the irrigation system installed from this project.

7.12 Herbicide control shall be of pre-emergence application as follow:

(1) Dacthal No. 75 or approved equal shall be applied in all ground cover areas and around all planting in gravel areas to a radius of 8 feet. Application as per manufacturer's directions.

(2) Simizine or approved equal shall be applied in all gravel areas only. The Contractor shall maintain a distance of 8 feet from all planting areas. Application as per manufacturer directions.

7.13 Tree Wound Dressing. Tree wound dressing shall be a black asphalt base antiseptic paint.

8. INSTALLATION.

8.1 Planting Seasons and Conditions. Planting shall be done between May and September. Planting shall be done with the approval of the Contracting Officer only when the ground is not frozen, or in an otherwise unsuitable condition for planting. If special conditions exist that may warrant a variance in the above planting dates or conditions, a written request shall be submitted to the Contracting Officer stating the special conditions and proposed variance.

8.2 Layout. Plant material locations and bed outlines shall be staked on the project site by the Contractor and approved by the Contracting Officer before any plant pits or beds are dug. The Contracting Officer may adjust plant material locations to meet field conditions.

8.3 Excavation for Planting.

8.3.1 Prior to excavating for plant pits and beds the area shall conform to the lines and grades shown on the plans and the location of any underground utilities shall be verified by the Contractor and the Contracting Officer. Damage to utility lines shall be repaired at the Contractor's expense. If lawns have been established prior to planting operations, the surrounding turf shall be covered before excavations are made in a manner that will protect turf areas. Existing trees, shrubbery, and beds that are to be preserved shall be barricaded in a manner that will effectively protect them during planting operations.

8.3.2 Rocks and other underground obstructions shall be removed to a depth necessary to permit proper planting according to plans and specifications. If underground utilities, construction, or solid rock ledges are encountered, other locations may be selected by the Contracting Officer.

8.3.3 Plant pits may be dug by any method approved by the Contracting Officer provided that the pits have vertical sides and flat bottoms. When pits are dug with an auger and the sides of the pits become glazed, the glazed surface shall be scarified. The size of plant pits shall be as shown on the plans.

8.3.4 Existing soil to be replaced in plant beds shall be excavated to a depth of 6 inches and replaced with planting soil mixture and topsoil. Plant beds shall be brought to a smooth and even surface conforming to established grades.

8.3.5 Excess topsoil shall be used to form watering basins around plants, as specified herein or removed from the project site.

8.4 Setting Plants. Balled and burlapped and container-grown plants shall be handled and moved only by the ball or container. Plants shall be set plumb and held in position until sufficient soil has been firmly placed around roots or ball. Plants shall be set in relation to surrounding grade so that they are even with the depth at which they were grown in the nursery, collecting field, or container. When fertilizer in packet or tablet form is used, it shall be placed prior to backfilling and in accordance with the manufacturer's recommendations. Ground cover plants may be planted after the mulch is in place. Care shall be taken to avoid contaminating the mulch with the planting soil.

8.4.1 Container grown stock shall be removed from containers in such a way so as to prevent damage to plant or root system. Planting shall be backfilled with planting soil mixture to approximately half the depth of the ball and then tamped and watered. The remainder of backfill of planting soil mixture shall be tamped and watered. Earth saucers or water basins shall then be formed around isolated plants.

8.5 Edging Plant Beds or Individual Plants.

8.5.1 Beds or individual plants shall be uniformly edged, using a sharp tool to provide a clear cut division line between the planted area and the adjacent lawn. Bed shape shall be as indicated on the plans. Individual plant pits shall be circular in shape.

8.5.2 Metal edging materials shall be installed in accordance with manufacturer's recommendations and/or as indicated on the plans.

8.6 Mulching.

8.6.1 Mulching shall take place within 48 hours after planting.

8.6.2 Placing Organic Material. A mulch of bark shall be spread to a uniform thickness of one inch.

8.6.3 Mulch shall be kept out of the crowns of shrubs and off buildings, sidewalks, light standards, and other structures.

8.7 Staking.

8.7.1 Plants shall be staked as indicated on drawings.

8.8 Pruning.

8.8.1 New plant material shall be pruned in the following manner: Dead and broken branches shall be removed. Deciduous trees and shrubs shall be pruned to reduce total amount of anticipated foliage by one fourth to one third. Typical growth habit of individual plants shall be retained with as much height and spread as is practicable. Cuts shall be made with sharp instruments, and shall be flush with trunk or adjacent branch to insure elimination of stubs. "Headback" cuts at right angles to line of growth shall not be permitted. Trees shall not be poled or the leader removed. Trimmings shall be removed from the site. Cuts 1/2 inch in diameter and larger shall be painted with the specified tree wound dressing.

8.9 Restoration and Clean-Up. Excess and waste material shall be removed daily. When planting in an area has been completed, the area shall be cleared of all debris, spoil piles, and containers. Where existing grass areas have been damaged or scarred during planting operations, the Contractor shall restore disturbed areas to their original condition at his expense. At least one paved pedestrian access route and one paved vehicular access route to each building shall be kept clean at all times. Other paving shall be cleaned when work in adjacent areas is completed.

8.10 Maintenance During Installation. Maintenance operations shall begin immediately after each plant is planted and shall continue as required until final acceptance. Plants shall be kept in a healthy, growing condition by watering, pruning, spraying, weeding, and any other necessary operations of maintenance. Plant saucers and beds shall be kept free of weeds, grass, and other undesired vegetation. Plants shall be inspected at least once per week by the Contractor during the installation period and needed maintenance performed promptly.

9. PLANT ESTABLISHMENT PERIOD. Final acceptance of all work and materials under this section shall be at the end of a period of establishment to be determined as follows.

9.1 Beginning of the Plant Establishment Period. The period of establishment shall begin on the date that an inspection by the Contracting Officer shows that all plants are in place and have been installed in accordance with the specifications and plans. Replacement of plants that were not supplied by the Contractor but were relocated under this contract and that die for any reason other than improper handling during transplanting and/or lack of proper care will not be required. Loss through Contractor negligence, however, shall require replacement in kind and size per specification and shall be at the Contractor's expense.

9.2 During the Plant Establishment Period.

9.2.1 During the plant establishment period, the Contractor shall water all plants as necessary to maintain an adequate supply of moisture within the root zone. An adequate supply of moisture is estimated to be the equivalent of one inch of absorbed water per week that is delivered at weekly intervals in the form of natural rain or is augmented as required by periodic waterings. Water shall not be applied with a force sufficient to displace mulch and shall not be applied so quickly that it cannot be absorved by the mulch and plants.

9.2.2 Plants shall be pruned and mulch replaced as required.

9.2.3 Stakes, and eroded plant saucers shall be replaced as required.

9.2.4 In plant beds, grass and weeds shall not be allowed to reach a height of 3 inches before being completely removed, including the root growth. When plants are in groups other than cultivated beds, the Contractor shall not permit grass or other vegetation between them to become more than 5 inches in height.

9.2.5 Other work, such as spraying with approved insecticides and fugicides to control pests, shall be done to ensure plant survival in a healthy growing condition.

9.2.6 Plants shall be fertilized at least once during the period of establishment. Fertilization shall be either by topdressing at one pound per 100 square feet of plant pit or bed area or by tablet or packet form fertilizer applied as per manufacturer's recommendations. Formula for the application shall be 8N-8P-4K. All plants shall be watered immediately after fertilization.

9.2.7 Dead plants shall be removed immediately at the Contractor's expense. The Contractor will not be responsible for theft or damage to plants by vehicles or vandalism following completion and approval of the installation portion of the planting contract.

9.3 Termination of the Plant Establishment Period.

9.3.1 A preliminary inspection by the Contractor and the Contracting Officer will be held 3 months from the date of the beginning of the plant establishment period to determine plant acceptability and the number of replacements. Alternate or substituted varieties of plants shall be used only if approved by the Contracting Officer.

9.3.2 A final inspection of all plants will be held after the replacement planting has been completed. No additional plant establishment period will be required for replacement plants. The establishment period will end on the date of this inspection and said inspection will be considered final acceptance provided the Contractor has complied with the following requirements.

a. Dead, missing, and defective plant material shall have been replaced as directed by the Contracting Officer; otherwise, final acceptance will be delayed until such replacements have been satisfactorily accomplished.

b. Plant beds and plant saucers shall have been properly mulched and shall be free of weeds.

c. Stakes shall be in good condition.

d. Remedial measures directed by the Contracting Officer to ensure plant survival shall have been carried out.

e. Plant material shall have been fertilized as required prior to acceptance.

* * * * *

SECTION 11K

MISCELI ANEOUS ITEMS OF WORK

Index

1. Applicable Publications
2. Shop Drawings
3. Drinking Fountains
4. Bollards
5. Ramadas
6. Kiosks
7. Tennis Equipment
8. Basketball Equipment
9. Metal Lockers
10. Volleyball Equipment
11. Croquet Equipment
12. Bike Racks
13. Play Area Equipment
14. Signage
15. Shuffleboard
16. Horseshoes Equipment

1. APPLICABLE PUBLICATIONS. The following publications of the issues listed below, but referred to thereafter by basic designation only, form a part of this specification to the extent indicated by the references thereto.

1.1 Federal Specification (Fed. Spec.).

AA-L-486 G(1)	Lockers; Clothing, (Steel)

1.2 Federal Standard (Fed. Std.).

No. 23C	Lockers; Clothing (Steel)

1.3 American Association of State Highway Officials (AASHO) Publications.
T180

2. SHOP DRAWINGS. Shop drawings, along with catalog cuts, templates, and erection and installation details, as appropriate, for all miscellaneous items of work shall be submitted for approval in accordance with the "General Requirements". Submittals shall be complete in detail; shall indicate type, style, and dimensions; and shall show construction details, anchorage, and installation.

3. DRINKING FOUNTAINS.

3.1 General. Drinking fountain assembly shall include the complete installation and provision of the following.

Drinking Fountain and Pedestal
Dry Well

3.2 Drinking Fountain and Pedestal. Drinking fountain and pedestal shall be manufactured Vibra-cast, reinforced concrete. They shall be finished, sized, and installed as shown on drawings. Fountain shall contain integral satin chrome plated anti-squirt bubbler mounted on a stainless steel receptor. Receptor is recessed flush with concrete top and anchored with vandal-resistant bowl holder. Unit shall be equipped with pushbutton valve with automatic stream regulator and heavy-guage stainless steel access plate, secured with vandal-resistant screws. Units shall be plumbed and mounted as per manufacturer's instructions. Units shall be installed prior to pouring of surrounding concrete slab.

3.3 Dry Well, Concrete and Piping. Dry well shall be a precast concrete unit of size and installation shown on the drawings. Concrete shall be 3,000 psi and gravel shall be clean, river-run and of a size shown on drawings. Piping shall conform to the applicable requirements of the section PLUMBING, GENERAL PURPOSE.

4. BOLLARDS.

4.1 Installation. Bollards shall be installed as indicated on the drawings – complete with fittings and metal chain.

4.2 Specifications. Bollards shall be of size and finish as indicated on the drawings and shall be manufactured by Western Art Stone or an approved equal. Concrete shall be 5,000 psi, Vibra-cast, and finished free from blemishes, holes, or irregularities. Finish shall be as indicated on the drawings. All integral metal parts shall be as shown – installed by manufacturer and be of galvanized steel. All eyes shall be mounted vertical. There shall be no eyes on outside faces of end bollard units.

4.3 Mounting. Units shall be mounted plumb, as per manufacturer's specifications and with connecting chain eyelets lined up straight. Chains shall be 3/8" proofcoil galvanized steel chain. Sag between bollards shall be a maximum of 6" from a horizontal plane between eyebolts. All chain sag shall be consistent throughout a group of bollards and chains.

5. RAMADAS.

5.1 General. Ramadas shall be constructed and installed as indicated on the drawings.

5.2 Wood. Wood shall be dressed, select grade Douglas fir, free from checks, cracks, blemishes, knot holes or irregularities. All sawn faces shall be smooth and edges shall be rounded and free from splinters.

5.3 Metal Post Holders. Metal post holders shall be sized and constructed as indicated on the drawings. All welds and corners shall be ground smooth to remove all burrs, rough spots and irregularities.

5.4 Metal Fasteners. Metal fasteners shall be galvanized steel of a size shown or needed to complete work. All connections shall be in straight patterns. All metal shall conform to section: MISCELLANEOUS METAL.

5.5 Concrete. Concrete shall meet all requirements of section: CONCRETE. All exposed parts shall be smooth, trowelled, free from holes, irregularities, or patches and have smooth edges. Strength shall be 3,000 psi.

5.6 Erection. Units shall be erected plumb and assembled in all respects.

5.7 Finish. Finish shall be as per section: PAINTING, GENERAL and as indicated.

6. KIOSKS.

6.1 General. Kiosks shall consist of the following: concrete base and wooden sides, shall be assembled in all respects as per drawings, and located in the indicated areas.

6.2 Base. Base shall be reinforced concrete sewer pipe of sizes shown. They shall be free from cracks, blemishes, patches, holes and irregularities.

6.3 Sides and Trim. Sides and trim shall be built from select grade, kiln dried redwood and free from blemishes, checks, cracks or irregularities. Wood shall be given two coats of clear linseed oil as per section PAINTING, GENERAL. Construction shall be neat, straight and in accordance with good workmanship.

6.4 Hardware. All hardware shall be galvanized or consistent types and of sizes indicated on drawings or as needed. They shall be installed in consistent, straight, even patterns as per section HARDWARE, BUILDERS (GENERAL PURPOSE). Concrete base shall be installed plumb, prior to installation of concrete walks. Base shall be filled with compacted earth in 6" lifts and covered with a concrete cap as indicated on the drawings. Unit shall be weathertight and free from settlement or shifting.

7. TENNIS EQUIPMENT.

7.1 Netting. Shall be 42' long and 3-1/2' wide in size and shall be made of treated knotted nylon with mesh size of 1-3/4" square and a breaking strength of not less than 300 pounds per cord. Nylon shall be impregnated with rubber preservative. Suspension member shall be 3600 pound breaking strength, vinyl covered steel cable. Top binding shall be 22 ounces per square yard, vinyl coated nylon with double stitching on the top tape. Bottom and end binding shall be 18 ounces per square yard, vinyl coated nylon. Center strap shall be 2" polyproplene material with adjustable buckle. Ends shall be square and maintained as such with dowels or rods.

7.2 Supports. Supports shall be sized as per drawings; shall be of galvanized steel and shall come complete with pulleys, caps and 1200 pound capacity reels with detachable handles and enclosed gear assembly. All necessary hardware shall be included and installed. All parts shall be treated as needed, primed and painted as per section PAINTING, GENERAL and as indicated on drawings.

7.3 Surfacing.

7.3.1 Surfacing shall be a composition section beginning with subgrade compacted to 95 percent Proctor and sterilized. The finished subgrade shall be smooth, trimmed, and shall not vary more than 1/2-inch in 10 feet from the required line, grade, and cross-section set forth in the drawings. It shall meet the following tests and requirements:

Tests	Requirements
1. CBR (Minimum)	12
2. "R" Value (Minimum)	48
3. (Liquid Limit [Maximum]	25
(Plasticity Index [Maximum]	6
4. Sand Equivalent (Minimum)	35

7.3.2 Aggregate base shall be compacted to not less than 95 percent of AASHTO density when tested in accordance with AASHTO T180 (latest revision) and primed in accordance with Arizona Department of Transportation specifications.

7.3.3 Bituminous Hot Mix Leveling and Surface Courses shall not vary from required line, grade, and cross-section set forth in plans more than 1/4-inch in 10 feet when measured in any direction. The paving direction of the surface course shall be at right angles to the leveling course.

7.3.4 Bituminous Hot Mix Leveling course shall be a minimum of 2 inches of compacted thickness meeting the requirements of the Asphalt Institute types III or IV mixes, Arizona Department of Transportation. The leveling course shall be paved at right angles to the slope.

7.3.5 Bituminous Hot Mix Surface course shall be at least one inch of compacted thickness meeting the requirements of the Asphalt Institute types III or IV mixes, Arizona Department of Transportation. The surface course shall be paved in the direction of the slope and shall be allowed to cure a minimum of 2 weeks prior to preceeding with resurfacer courses.

7.3.6 Resurfacer shall be an acrylic, Laykold or an approved equal, and shall be applied to the clean underlying surface in multiple applications to obtain a total application of 25 to 40 gallons per 1,000 square feet – based on the material prior to any dilution. No application shall be covered by a succeeding application until throughly cured. Dilution of Resurfacer with water to obtain workability is permitted. The diluted material shall be homogeneous and segregation shall not be tolerated.

7.3.7 Initial applications of Resurfacer should be fortified with sand and additional Tennis Court Binder. The Resurfacer/Sand application mix shall be made up of the following blend:

50 gallons Laykold Resurfacer (or approved equal)
* 8-15 gallons Laykold Tennis Court Binder (or approved equal)
40-60 gallons (400-600 lbs.) Mortar or Plaster Sand

* Note: Binder content (in gallons) equal to 20 - 25 percent gallons of sand used.

7.3.8 After the Resurfacer has thoroughly cured, the entire area shall be rolled with a 2- to 4-ton steel wheel tandem roller, and water flooded. Any areas holding over 1/8-inch depth of water shall be leveled with patching mix and allowed to thoroughly cure, then rolled with a 2- to 4-ton steel wheel tandem roller.

7.3.9 Patching mix shall be made up of the following blend:

2 parts by volume Mortar or sand

2 parts by volume Laykold Resurfacer (or approved equal)

1/2 part by volume Laykold Tennis Court Binder (or approved equal)

The finished surface shall be smooth and free of ridges, valleys, and tool marks. Colors shall consist of Laykold Colorcoat 200 and Laykold Colorcoat 100 or approved equal.

7.3.10 Laykold Colorcoat 200 or approved equal shall be applied with a squeegee on the clean, dry underlying surface in multiple applications to obtain a minimum application rate of 11 gallons per 1,000 square feet of area based on the material prior to any dilution. No application shall be covered by a succeeding application until thoroughly cured. The diluted material shall be homogeneous. Segregation before or during application will not be permitted. The finished surfaces shall be smooth, free of ridges, valleys and tool marks.

7.3.11 Laykold Colorcoat 100 or approved equal shall be applied with a squeegee (followed by a broom) to clean, dry underlying surface to obtain a minimum application rate of 4 gallons per 1,000 square feet of area – based on material prior to any dilution. No application shall be covered by a succeeding application until thoroughly cured.

7.3.12 Dilution with water to obtain application consistency is permitted up to a maximum of one part water to 4 parts Colorcoat 100 or approved equal. The diluted material shall be homogeneous. Segregation before or during application will not be permitted. The finished surface shall be smooth and free from ridges, valleys and tool marks. Lines shall be marked and painted with Laykold or approved equal line paint.

8. BASKETBALL EQUIPMENT.

8.1 General. Basketball courts shall be constructed as shown on drawings and shall include playing surface, basketball standards, hoops, and backboards.

8.2 Playing Surface. Shall consits of a concrete slab covered with an application of Chevron Laykold Color coat or approved equal.

8.2.1 Concrete slab shall be 2,800 psi as dimensioned and shown on drawings over subgrade, compacted to 95 percent Proctor. Surface variation should not be more than 1/8" in 10 feet with surface texture of a light hair broom finish. Slab shall be cured for a period of seven days by covering. Slab shall then be acid etched with hydrochloric acid at the rate of 6 parts water to one part acid. Acid shall be allowed to react until aggregate is exposed. Flush thoroughly with clean water. Entire surface should be primed with unsanded acrylic water solution.

8.2.2 Entire surface should be primed with unsanded acrylic water solution.

8.2.3 Upon complete drying, two coats of sanded acrylic mix should be applied followed by one coat of unsanded color coat as per drawings. Finish surface should be smooth, free of ridges, valleys, and marks. Lines should be compatible with line paint.

8.3 Basketball Standards. Shall be Hansen Basketball standards as fabricated by Form, Inc. or approved equal. Standards shall be Vibra-cast concrete, and free of all blemishes, holes and irregularities.

8.4 Finish. Shall be natural concrete and unit shall be installed as indicated on the drawings. See section CONCRETE.

8.5 BACKBOARD. Integral backboard and goal of aluminum shall be provided and installed as per manufacturer's directions. There shall be no dents, irregularities or blemishes on finished product.

9. METAL LOCKERS.

9.1 General. Contract drawings indicate extent and general assembly details of the metal lockers. Members of connections not indicated on the drawings shall be designed by the Contractor. Modification of details will be permitted when approved. However, such approval will not relieve the Contractor from the responsibility for coordination with other portions of the work or from any other responsibility under the contract.

9.2 Shop Drawings. Shall be submitted for approval in accordance with the GENERAL PROVISIONS. Shop drawings shall consist of catalog cuts, design and erection drawings, finish specifications, and other data as necessary to clearly describe design, materials, sizes, layouts, construction details, fasteners, and erection.

9.3 Delivery and Storage. Materials shall be delivered to the site in a dry and undamaged condition and stored out of contact with the ground. Materials shall be covered with weathertight coverings and kept dry.

9.4 Lockers.

9.4.1 Material. Doors and door frames shall be made of cold rolled and leveled sheet steel. Other parts shall be made from mild cold rolled steel. All steel to be free from imperfections and capable of taking a high grade enamel finish.

9.4.2 Doors. Shall be 16-gage steel, adequately flanged. Formations shall consist of 2 right angles at lock side of door; 2 right angles and hinge side, and one right angle formation at top and bottom. Triple tier lockers shall have one right angle formation on all 4 sides.

9.4.3 Door Frames. Shall be not less than 16-gage steel capable of taking same high grade finish as remainder of locker. All parts to be channel formation securely welded together. Sides of frame shall form a continuous door strike.

9.4.4 Friction Catch. A friction catch consists of a mounting angle and a spring steel clip with a ball formation that engages the locker frame hook and holds the door closed.

9.4.5 Hinges. Shall be at least 2" wide of the full-loop, tight pin style, to be securely welded to frame and riveted to door with 2 rivets to each hinge. Locker doors shall have 2 hinges.

9.4.6 Body. All locker body components shall be made of cold rolled steel specially flanged for added strength and rigidity to insure tight joints between bolts. All bolts and nuts shall be zinc plated.

9.4.7 Finish. Before enamel is applied, the surfaces of the steel shall be phosphatized in a five stage process to inhibit corrosion and increase the durability of the applied enamel. All parts shall then be finished with a heavy coat of enamel Enamel shall be baked-on. Body parts are finished in a standard neutral color. Exposed parts to be standard colors as selected. Bolts and nuts shall be zinc plated.

9.4.8 Number Plates. Each locker shall have a polished aluminum number plate with black numerals not less than 1/2" high. Plates to be attached with split rivets.

9.4.9 Doors shall be louvered at top and bottom for ventilation, triple tier 3 louvers at top and bottom.

9.4.10 Provide trim closer pieces finished same as lockers for interal corners.

9.5 Installation. Install lockers at locations indicated on drawings. Anchor lockers in place with correct fittings to assure neat, rigid installation. Install trim pieces as required.

10. VOLLEYBALL EQUIPMENT.

10.1 General. Volleyball equipment shall consist of the following:

Netting
Supports
Accessories and incidental work needed to complete the construction.

10.2 Netting. Netting shall be 32' long by 3' wide and shall be made of treated, knotted nylon netting with a mesh size of 4" square and a breaking strength of 350 pounds per cord. Twine size shall be No. 42. Top and bottom rows of netting shall be doubled through the top and bottom tapes. Netting shall be treated with a preservative. Top cable shall be vinyl covered steel cable with a breaking strength of 7,000 pounds. Bottom cable shall be galvanized steel cable with a breaking strength of 2,800 pounds. Tapes of top, bottom and ends shall be white, 22 ounces per square yard and vinyl coated nylon. Corners shall be white, 22 ounces per square yard and vinyl coated. Corners shall be gussetted for strength and ends braced with 1-1/8" maple dowels. Nets are tied through and outside of dowels. Grommets shall be No. 2 brass with 3/8" diameter spur type. All stitching shall be with polyester thread, with a double lock stitch.

10.3 Poles. Poles shall be as shown on the drawings – galvanized steel, treated, primed, and painted, see section PAINTING, GENERAL. Concrete footings shall respond to section CONCRETE.

11. CROQUET EQUIPMENT.

11.1 General. Croquet areas shall be built complete in all respects with plastic covering, metal fittings and concrete pad.

11.2 Concrete Slab. Concrete slab shall be 2,800 psi strength over subgrade compacted to 95 percent Proctor and shall meet all requirements of section CONCRETE. All sleeves and integral metal posts shall be added before slab is poured.

11.3 Metal Parts. All metal parts shall be added before slab is poured. All metal parts shall be galvanized steel with exposed edges and ground smooth, removing all burrs and irregularities, prior to galvanization. All removable metal pieces shall be easily installed and removed from sleeves. All work shall conform to section MISCELLANEOUS METAL.

11.4 Covering Material. Covering material shall be Desert Turf or approved equal. It shall be tufted pile on woven olefin vinyl backing and shall be the color of federal color code No. 14187. It shall be synthetic grass material of proven acceptability in the Scottsdale area. Material shall be installed in straight, even rows and using manufacturer's approved method of attachment. There shall be no seams or gaps between rows. Material shall be wrapped around face of slab for at least 2". There shall be a year's guarantee on splitting or pulling away of material.

12. BIKE RACKS. Bike racks shall be Model No. 2292-085 manufactured by Park-Rite or approved equal. Units shall be of steel, factory finished and painted. Units shall be installed as per manufacturer's instructions and shall be free of blemishes, dents, scratches or irregularities.

13. PLAY AREA EQUIPMENT.

13.1 Spring Animals. Shall be as manufactured by Mexico Forge of Reedsville, Pa. or approved equal, and shall include all applicable hardware and assemblage. Units shall be of cast aluminum and shall be free of scratches, blemishes, dents or any irregularity.

13.2 Wooden Equipment. Shall be by Timberform or approved equal and shall be manufactured items of Douglas Fir, free-of-heart wood with a fine grain. No splinters, checks, knot holes, loose knots, or any other irregularity of unsoundness is allowed. All shall be pressure treated with non-toxic preservatives. All edges shall be rounded and exposed ends chamfered on 4 sides. All bolt holes shall be predrilled and all necessary hardware shall be provided in sufficient quantity, size and length to assure safety. Units shall be assembled as per manufacturer's instructions for individual units. All metal parts, as indicated on the drawings, shall be hot-dip galvanized.

13.3 Metal Equipment. Shall be as manufactured by Mexico Forge, Reedsville, Pa. or approved equal. All units shall be assembled as per manufacturer's instructions – free of dents, scratches, blemishes or irregularities.

13.4 Hardware. All hardware shall be manufacturer approved and in good condition. All units shall be mounted as per instructions – plumb, true and in positions as indicated on drawings.

13.5 Concrete Supports. All concrete supports shall meet with specification section CONCRETE.

14. SIGNAGE.

14.1 Wood Signs. Wood signs shall be select, rough-sawed and treated, kiln-dried redwood. They shall conform to applicable requirements of the section ROUGH CARPENTRY. Colors and treatment shall be as indicated on the drawings. Wood shall receive 2 coats of clear linseed oil as per section PAINTING, GENERAL.

14.2 Ceramic Signs. Ceramic signs shall be polychorme, flat relief tile of uniform thickness as indicated on drawings. They shall be of stoneware composition subjected to a cone 6 firing. Colors shall be as shown on drawings and shall be the result of oxidation glaze applied prior to firing. Finish shall be gloss with some mottling allowed. The layering of glazes shall be used in certain instances to achieve certain colors. Tile shall be set upon a tile mastic setting bed with a 3/16" grout joint. Grout shall match with the background in color.

14.3 Sign Suports. Signs supports shall be of masonry, matching the type, color, method of installation and quality of the architecture and shall conform to section REINFORCED MASONRY. Concrete work shall meet requirements of section CONCRETE, and all exposed areas shall be smooth trowelled with rounded corners.

14.4 Fittings. All exposed fittings shall be galvanized steel – sized as needed, treated, primed and painted to match background material.

15. SHUFFLEBOARD.

15.1 Slab. Shuffleboard slabs shall be constructed as indicated and shall meet all applicable provisions of the official rules of the National Shuffleboard Association, Inc. Concrete slabs shall be placed on subgrade compacted to 95 percent Proctor and shall be 3,000 psi strength. A leveling coat of one part cement and 2-1/2 parts sand shall be added to eliminate all high and low spots and with a maximum tolerance of 1/32" in 6 feet. Slab shall be covered and cured for seven days. The surface should be stone finished to remove all grit and sharpness. Color shall be integral and shall match indicated federal color standard as indicated on the drawings. See section CONCRETE.

15.2 Finish. There shall be no cracking, checking or spalling of the concrete or top coat. Color shall be even and of consistent tone. Stripes shall be carefully marked and painted with an exterior paint for athletic facilities. See section PAINTING, GENERAL. Line paint shall be white.

16. HORSESHOES EQUIPMENT.

16.1 Metal Parts. Metal parts shall be galvanized steel meeting requirements of section MISCELLANEOUS METAL. Backstop supports shall be painted as indicated on the drawings as per section PAINTING, GENERAL. Vertical risers shall be unpainted glavanized free from all burrs and irregularities.

16.2 Backstop Wood Supports. Backstop wood supports shall be Douglas fir free from all cracks, checks, knotholes, irregularities and blemishes. All edges shall be rounded with all sawn faces smooth. Wood for pit outlines shall be oak pressure treated with preservative such as Kopper's "penta" or an approved equal.

16.3 Concrete. Concrete shall be 3,000 psi and meet requirements of section CONCRETE. Units shall be constructed plumb and true as per drawings.

* * * * *

SECTION 12A

PREFABRICATED METAL BUILDING

Index

1. Applicable Publications
2. General
3. Design Requirements
4. Shop Drawings
5. Samples and Descriptive Data
6. Delivery and Storage
7. Building Components
8. Shop Painting
9. Factory Color Finish
10. Erection
11. Field Painting
12. Guarantee

1. APPLICABLE PUBLICATIONS. The following publications of the issues listed below, but referred to thereafter by basic designation only, form a part of this specification to the extent indicated by the references thereto.

1.1 Military Specification (Mil. Spec.).

MIL-S-4174B	Steel Sheet and Strip, Flat, Aluminum Coated, Low Carbon

1.2 U.S. Department of Commerce, National Bureau of Standards (NBS), Product Standard.

PS 53-72	Glass-Fiber Reinforced Polyester Structural Plastics Panels

1.3 The Aluminum Association (AA), Publications.

Aluminum Standards & Data (Jan 1976).

Specifications for Aluminum Structures (April 1976).

1.4 American Institue of Steel Construction (AISC), Publication.

Specification for the Design, Fabrication & Erection of Structural Steel for Buildings (Feb 12, 1969; Errata Nov 1969) with Commentary (Jul 1969; Errata Nov 1969; Addenda Jun 21, 1974), Suppl No. 1 (Nov 1, 1970), Suppl No. 2 (Dec 8, 1971), Suppl No. 3 (Jun 12, 1974; Rev Oct 30, 1975).

1.5 American Iron and Steel Institute (AISI), Publication.

Specification for the Design of Cold-Formed Steel Structural Members (1968 Edition—5th Printing Jul 1974 with Addendum No. 1) with Part II—Supplementary Information; Part III—Illustrative Examples; Part IV—Charts and Tables; and Part V—Commentary.

1.6 American Society for Testing and Materials (ASTM), Specifications.

A 36-75	Structural Steel
A 53-76	Pipe, Steel, Black and Hot-Dipped, Zinc-Coated Welded and Seamless
A 252-75	Welded and Seamless Steel Pipe Piles
A 446-76	Steel Sheet, Zinc Coated (Galvanized) by the Hot-Dip Process, Structural (Physical) Quality
A 500-76	Cold-Formed Welded and Seamless Carbon Steel Structural Tubing in Rounds and Shapes

A 501-76	Hot-Formed Welded and Seamless Carbon Steel Structural Tubing
A 529-75	Structural Steel With 42,000 psi (290 MPa) Minimum Yield Point (1/2 in. (12.7mm) Maximum Thickness)
A 570-75	Hot-Rolled Carbon Steel Sheet and Strip, Structural Quality
A 57276	High-Strength Low-Alloy Columbium-Vanadium Steels of Structural Quality
A 588-75	High-Strength Low-Alloy Structural Steel with 50,000 psi Minimum Yield Point to 4 in. Thick
A 606-75	Steel Sheet and Strip, Hot-Rolled and Cold-Rolled, High-Strength, Low-Alloy, With Improved Corrosion Resistance
A 607-75	Steel Sheet and Strip, Hot-Rolled and Cold-Rolled, High-Strength, Low-Alloy Columbium and/or Vanadium
A 618-74	Hot-Formed Welded and Seamless High-Strength Low-Alloy Structural Tubing
B 209-76	Aluminum-Alloy Sheet and Plate
B 221-76	Aluminum-Alloy Extruded Bars, Rods, Wire, Shapes, and Tubes
B 241-76	Aluminum-Alloy Seamless Pipe and Seamless Extruded Tube
B 308-73	Aluminum-Alloy Standard Structural Shapes, Rolled or Extruded
B 429-73	Aluminum-Alloy Extruded Structural Pipe and Tube

1.7 American Welding Society (AWS), Publication.

D1.1-75 (Rev. 1-76)	Structural Welding Code

1.8 Metal Building Manufacturers Association (MBMA), Publication.

Recommended Design Practices Manual (1974).

2. GENERAL. Metal buildings shall be the product of a recognized metal building manufacturer. Metal buildings shall have single-slope roofs and shall be single-span, a structure of one of the following types:

Type I - Column with truss or column with beam frame.
Type II - Rigid frame.
Type III - Self-framing.

Building dimensions shall be as standard with the manufacturer and not less than those indicated, but exceeding the indicated dimensions only by the amount of the closest standard size thereto. Roof slope shall be one inch in 12 inches or steeper. Frame and covering may be matched and prepunched to receive fasteners, or the drilling of holes or fasteners may be performed in the field. The completed building shall be free of excessive noise from wind induced vibrations under the ordinary weather conditions to be encountered at the location where the building is erected, and meet all specified design requirements.

3. DESIGN REQUIREMENTS.

3.1 Loadings. Metal buildings shall be designed for the dead load, the specified live loads, and the combinations of these loads as set forth in the MBMA publication, Recommended Design Practices Manual. Reduction of load due to tributary loaded area will not be permitted. In addition to dead load, the following loads shall be included:

Vertical live load of 15 pounds per square foot.
Design wind velocity of 40 miles per hour.

3.2 Foundations shall be designed for an allowable soil bearing pressure of 1,500 pounds per square foot, a minimum bottom of footing depth of 1.5 feet below elevation of bottom of base plates, a factor of safety of 1.5 for uplift, and a concrete compressive strength of 2,500 pounds per square inch at 28 days.

3.3 Framing and Structural Members. Structural steel members shall be designed in accordance with AISC publication, Specification for the Design, Fabrication, and Erection of Structural Steel for Buildings. Structural cold formed steel framing members shall be designed in accordance with AISI publication, Specification for the Design of Cold-Formed Steel Structural Members. Aluminum framing and structural members shall conform to The Alum. Assoc. publication, Aluminum Standards and Data, and shall be designed in accordance with The Alum. Assoc. publication, Specifications for Aluminum Structures. Framed openings shall be designed to structurally replace the covering and framing displaced. Welding of steel shall be in accordance with AWS publication D1.1, and welding of aluminum shall be in accordance with The Alum. Assoc. publication, Specifications for Aluminum Structures.

3.4 Exterior Covering. Except as modified hereinafter, steel covering shall be designed in accordance with AISI publication, Specification for the Design of Cold-Formed Steel Structural Members; aluminum covering shall be designed in accordance with The Alum. Assoc. publications, Aluminum Standards and Data and Specifications for Aluminum Structures. Maximum live load deflection for roof sheets shall not exceed 1/80th of the span between supports. Maximum deflections shall be based on sheets continuous across two or more supports with sheets unfastened and fully free to deflect.

4. SHOP DRAWINGS shall be submitted for approval in accordance with the SPECIAL PROVISIONS. Shop drawings shall consist of catalog cuts; design and erection drawings; shop painting and finishing specifications; instruction manuals; and other data as necessary to clearly describe design, materials, sizes, layouts, construction details, fasteners, and erection. For all metal building designs, except those programmed on a computer, the shop drawings shall be accompanied by engineering design calculations for structural and covering components. For computer programmed designs, shop drawings shall be accompanied by stress values and a certificate, signed by a registered professional engineer, stating the design criteria and procedures used and attesting to the adequacy and accuracy of the design. A brief list of locations where buildings of similar design have been used shall be submitted with the shop drawings and shall include information regarding date of installation, name and address of owner, and how the structure is used.

5. SAMPLES AND DESCRIPTIVE DATA. The following shall be submitted for approval.

Accessories - One sample of each type of flashing, trim, closures, caps and similar items. Size shall be sufficient to show construction and configuration.

Covering, roof - One piece of each type to be used, 9 inches long, full width. For factory color finished covering, the sample shall be accompanied by certified laboratory test reports showing that the sheets to be furnished are produced under a continuing quality control program and that a representative sample has been tested within the past 12 months and has met the quality standards specified in paragraph FACTORY COLOR FINISH.

Fasteners - Two samples of each type to be used with statement regarding intended use.

Gaskets and insulating compounds - Descriptive data.

Sealant - One sample, approximately one pound, and descriptive data.

6. DELIVERY AND STORAGE. Materials shall be delivered to the site in a dry and undamaged condition and stored out of contact with the ground. Materials other than framing and structural members shall be covered with weathertight covering and kept dry. Storage accommodations for roof covering shall provide good air circulation and protection from surface staining.

7. BUILDING COMPONENTS.

7.1 General. The size and weight of prefabricated components shall permit easy handling in the field; and the maximum size and weight of any component shall be suitable for transportation by commercial carrier. Each piece or part of the assembly shall be clearly and legibly marked to correspond with the shop drawings.

7.2 Framing and Structural Members. Steel 1/8 inch or more in thickness shall conform to ASTM A 36, A 529, A 572, or A 588. Uncoated steel less than 1/8 inch in thickness shall conform to ASTM A 570, A 606, or A 607. Galvanized light gage steel shall conform to ASTM A 446, G 90 coating designation 18 Galvanized Sheet Gage or

heavier. Aluminum shall conform to ASTM B 209, B 221, or B 308. Structural pipe shall conform to ASTM A 53, A 252, A 500, A 501, A 618, B 221, B 241 or B 429. Shop connections for steel shall conform to the AISC publication, Specification for the Design, Fabrication, and Erection of Structural Steel for Buildings, or the AISI publication, Specification for the Design of Cold-Formed Steel, as applicable. For aluminum, mechanical connections, fabrications, and testing shall conform to The Alum. Assoc. publication, Specifications for Aluminum Structures. Erection bolts and anchors bolts shall be of standard sizes and types. Holes for the bolts shall be made in the shop, prior to assembly of structural members in the field.

7.3 Roof Covering shall be either steel or aluminum meeting the requirements specified below and shall have configurations for overlapping adjacent sheets or interlocking ribs for securing adjacent sheets. Width of sheets with overlapping configurations shall provide not less than 24 inches of coverage in place; width of sheets with interlocking ribs shall provide not less than 12 inches of coverage in place. Depth of configurations for roof covering shall be not less than one inch. Length of sheets shall be sufficient to cover the entire length of any unbroken roof slope when such slope is 25 feet or less. Sheets in excess of 30 feet shall have design provisions for thermal expansion and contraction. All sheets shall be square cut.

7.3.1 Steel Covering. Zinc-coated steel conforming to ASTM A 446, G 90 coating designation, factory color finished; or aluminum-coated steel conforming to Mil. Spec. MIL-S-4174, type II, factory color finished; 26 Galvanized Sheet Gage or thicker.

7.3.2 Aluminum Covering. Alloy conforming to ASTM B 209, temper as required for the forming operation, minimum 0.032 inch thick, factory color finished.

7.4 Accessories. Flashing, trim, metal closure strips, caps, and similar metal accessories shall be not less than the minimum thicknesses specified for covering. Accessories of zinc-coated steel to be used with aluminum or aluminum-coated steel covering shall be painted.

7.5 Fasteners shall be of types and sizes best suited for the purpose. Fasteners for securing covering and accessory items shall be aluminum or 300 or 400 series corrosion resisting steel. Gasketed washers of a material compatible with the covering and with a minimum diameter of 3/8 inch for structural connections shall be provided to waterproof the fastener penetration on the exterior side. Gasketed portion of washers shall be neoprene or other equally durable elastomeric material approximately 1/8 inch thick. When roof covering is factory color finished, exposed fasteners shall be factory color finished or provided with plastic color caps to match the covering.

7.6 Sealant shall be as recommended by the manufacturer, as best suited for the particular joint.

7.7 Gaskets and Insulating Compounds shall be nonabsorptive and suitable for insulating contact points of incompatible materials. Insulating compounds shall be nonrunning after drying.

8. SHOP PAINTING. Ferrous surfaces shall be cleaned of oil, grease, loose rust, loose mill scale, and other foreign substances and shop primed. Primer coating shall be in accordance with the manufacturer's standard system.

9. FACTORY COLOR FINISH. Roof covering shall be color finished on both sides at the factory. Surfaces shall be prepared for coating by thoroughly cleaning, pretreating, and priming, to provide a film which is compatible with the metal surface and the color finish. Color finish shall consist of a synthetic resin base coating that has been suitably plasticized and stabilized against heat and light. Dry-film coating thickness of the color coat shall be not less than 0.8 mil for exterior surface finish (and not less than 0.5 mil for interior surface finish). The exterior finishing system shall meet the quality standards specified in The Alum. Assoc. publication, Aluminum Standards and Data, except that for salt spray resistance exposure shall be 450 hours and maximum undercutting from the scored line shall not exceed 1/8 inch. Colors shall be as selected from manufacturer's standard colors.

10. ERECTION.

10.1 General. Erection shall be in accordance with the approved erection instructions and drawings and the requirements herein. Dissimilar materials which are not compatible when contacting each other shall be insulated from each other by means of gaskets or insulating compounds. Improper or mislocated drill holes shall be plugged with an oversize screw fastener, with a gasketed washer; however, sheet with an excess of such holes or with such holes in critical locations will be rejected. Exposed surfaces shall be kept clean and free from sealant, metal cuttings, and other foreign materials. Concrete work is specified in section: CONCRETE.

10.2 Framing and Structural Members. Anchor bolts shall be accurately set by template while the concrete is in a plastic state. Uniform bearing under base plates and sill members shall be provided using a nonshrinking grouting mortar when necessary. Members shall be accurately spaced to assure proper fitting of covering. As erection progresses, the work shall be securely fastened to resist the dead load and wind and erection stresses.

10.3 Roof Covering. Stained, discolored or damaged sheets shall be removed from the site. Roof covering shall be applied with the longitudinal configurations in the direction of the roof slope. Except for self-framing buildings, end laps shall be made over framing members with fasteners into framing members approximately 2 inches from the end of the overlapping sheet. Side laps shall be laid away from the prevailing winds. Side lap distances, end lap

distances, joint sealing, and spacings of fasteners shall be in accordance with the manufacturer's standard practice insofar as the maximum fastener spacings specified are not exceeded and provided such standard practice will result in a structure which will be free from water leaks and meet design requirements. Spacing of fasteners shall present an orderly appearance and shall not exceed: 8 inches on center at end laps of covering, 12 inches on center at connection of covering to intermediate supports, 12 inches on center at side laps of roof coverings. Fasteners shall be installed in straight lines within a tolerance of 1/2 inch in the length of a bay. Side laps and end laps of roof covering and joints at accessories shall be sealed. Fasteners shall be driven normal to the surface and to a uniform depth to properly seat the gasketed washers. Accessories shall be fastened into framing members, except as otherwise approved.

11. FIELD PAINTING. Immediately upon detection, abraded or corroded spots on shop-painted surfaces shall be wire brushed and touched up with the same material used for the shop coat. Shop-primed ferrous surfaces exposed on the outside of the building shall be painted with two coats of an approved exterior enamel. Factory color finished surfaces shall be touched up as necessary with the manufacturer's recommended touch-up paint.

12. GURANTEE. The building shall be guaranteed against water leaks arising out of or caused of Construction" of section: by ordinary wear and tear by the elements for a period of 5 years. Such guarantee shall start upon final acceptance of the work or the date the Government takes possession, whichever is earlier.

* * * * *

SECTION 14A

ROUGH CARPENTRY

Index

1. Applicable Publication
2. Materials
3. Grading and Marking
4. Sizes
5. Moisture Content
6. Delivery and Storage
7. Shop Drawings
8. Samples and Descriptive Data
9. Preservative Treatment
10. Installation of Framing and Miscellaneous Wood Members
11. Installation of Insulation
12. Installation of Sheathing

1. APPLICABLE PUBLICATION. The following publications of the issues listed below, but referred to thereafter by basic designation only, form a part of this specification to the extent indicated by the references thereto.

1.1 Federal Specification (Fed. Spec.).

FF-N-105B & Am-3	Nails, Brads, Staples and Spikes: Wire, Cut and Wrought
HH-I-521E	Insulation Blankets, Thermal (Mineral Fiber, for Ambient Temperatures)
HH-I-1030A	Insulation, Thermal (Mineral Fiber, for Pneumatic or Poured Application)
SS-L-30D & Int. Am-2	Lath, and Board Products, Gypsum
UU-B-790a	Building Paper, Vegetable Fiber: (Kraft, Waterproofed, Water Repellent and Fire Resistant)

1.2 Military Specification (Mil. Spec.).

MIL-L-19140C & Int. Am-1 (SHIPS)	Lumber and Plywood, Fire-Retardant Treated

1.3 U.S. Department of Commerce, Product Standard (Prod. Std.).

PS 1-74	Construction and Industrial Plywood
PS 20-70 & Am-1	American Softwood Lumber Standard
PS 56-73	Structural Glued Laminated Timber

1.4 American Institute of Timber Construction (AITC), Publication.

AITC 109-74	Treating Standards for Structural Timber Framing
AITC 111-65	Recommended Practice for Protection if Structural Glued Laminated Timber During Transit, Storage and Erection
Unnumbered	Timber Construction Manual (1974; and Errata)

1.5 American Plywood Association (APA), Publication.

Plywood Truss Designs (1964)

1.6 American Society for Testing and Materials (ASTM), Publication.

D 226-75	Asphalt-Saturated Roofing Felt for Use in Membrane Waterproofing and Built-Up Roofing

1.7 American Society of Heating, Refrigerating and Air-Conditioning Engineers (ASHRAE), Publication.

ASHRAE Handbook of Fundamentals (1972)

1.8 American Wood Preservers Bureau (AWPB), Standard.

LP-2	Softwood Lumber, Timber and Plywood Pressure Treated With Water-Borne Preservatives for Above Ground Use (Rev. Jul 1975)
LP-3	Softwood Lumber, Timber and Plywood Pressure Treated With Light Hydrocarbon Solvent-Penta Solution for Above Ground Use (Rev. Jul 1975)
LP-4	Softwood Lumber, Timber and Plywood Pressure Treated With Volatile Hydrocarbon Solvent-Penta Solution for Above Ground Use (Rev. Jul 1975)
LP-55	Softwood Lumber, Timber and Plywood Pressure Treated with Creosote or Creosote-Tar Solutions for Use in Ground Contact Use (Rev. Jul 1975)

1.9 National Forest Products Associations (NFPA), Publication.

National Design Specification for Stress-Grade Lumber and Its Fastenings (1973 Edition & Supplement (Apr 1973))

Manual for House Framing (1970)

1.10 National Hardwood Lumber Association (NHLA), Publication.

Rules for the Measurement and Inspection of Hardwood and Cypress Lumber (January 1974; p. 5 & 6 Rev. June 1, 1975)

1.11 Northeastern Lumber Manufacturers Association, Inc. (NELMA), Publication.

Standard Grading Rules for Northeastern Lumber (January 1974 Supplement No. 1; Errata)

1.12 Northern Hardwood and Pine Manufacturers Association, Inc. (NHPMA), Publication.

Official Grading Rules for Eastern White Pine, Norway Pine, Jack Pine, Eastern Spruce, Balsam Fir, Eastern Hemlock and Tamarack (September 1, 1970, and Supplement Nos. 1 & 2)

1.13 Redwood Inspection Service (RIS), Publication.

Standard Specifications for Grades of California Redwood Lumber (November 1970; 2d Prtg, Sep 1975, incl Suppl Nos. 1 and 2)

1.14 Southern Cypress Manufacturers' Association (SCMA), Publication.

Standard Specifications for Grades of Tidewater Red Cypress (April 15, 1975)

1.15 Southern Pine Inspection Bureau (SPIB), Publication.

Standard Grading Rules for Southern Pine Lumber (September 1, 1970; Reprinted May 1975 to incl Supplement Nos. 1, 2, 3)

1.16 West Coast Lumber Inspection Bureau (WCLB), Standard.

No. 16 Standard Grading and Dressing Rules for Douglas Fir, Western Hemlock, Western Red Cedar, White Fir, Sitka Spruce Lumber (Oct 1, 1975)

1.17 Western Wood Products Association (WWP), Publication.

Standard Grading Rules for Western Lumber (July 1, 1974)

2. MATERIALS shall conform to the respective specifications and other requirements specified below.

2.1 Accessories and Nails.

2.1.1 Anchor Bolts. Steel, size as indicated, complete with nuts and washers.

2.1.2 Bolts; Lag, Toggle, and Miscellaneous Bolts, and Screws. Type, size, and finish best suited for intended use.

2.1.3 Clip Angles. Steel, 3/16-inch thick, size best suited for intended use; or zinc-coated steel or iron commercial clips designed for connecting wood members.

2.1.4 Expansion Shields. Type and size best suited for intended use.

2.1.5 Joist Hangers. Steel or iron, zinc-coated, size to fit members where used, sufficient strength to develop the full strength of supported member, complete with any special nails required.

2.1.6 Nails and Staples. Size and type best suited for purpose, in accordance with Fed. Spec. FF-N-105 when applicable to type used. For sheathing, length of nails shall be sufficient to extend one inch into supports. In general, 8-penny or larger nails shall be used for nailing through one-inch thick lumber and for toe nailing 2-inch thick lumber; 16-penny or larger nails shall be used for nailing through 2-inch thick lumber.

2.1.7 Timber Connectors. Unless otherwise specified, in accordance with NFPA Publication, National Design Specification for Stress-Grade Lumber and Its Fastenings; TPI-74; or AITC Publication, Timber Construction Manual.

2.2 Structural and Miscellaneous Wood Members.

2.2.1 Structural Members. Except as otherwise indicated, Douglas Fir, No. 1 grade, graded in accordance with the West Coast Lumber Inspection Bureau. Framing lumber 2" to 4" thick and 2" to 4" wide shall have design stresses not less than 1650 F_b for repetitive member uses with 1,700,000 E. Framing lumber, including headers, 2" to 4" thick, 6" and wider shall have design stresses not less than 1750 F_b for repetitive member uses with 1,800,000 E. Members shall be rough sawn where indicated Design of members and fastenings shall conform to AITC Publication, Timber Construction Manual.

2.2.2 Nonstress Graded Members shall include plates, caps, bucks, studs, blocking, nailers, sleepers and grounds. Members shall be standard grade or No. 2 grade except studs may be stud grade. Nonstress member grades shall conform to the National Grading Rule for Dimension Lumber established in conformance with Section 10 of Prod. Std. PS 20 and as applied in individual grading rules of applicable grading agencies. For species graded under other grading rules, grade used shall be equivalent to grades outlined above. Sizes shall be as follows unless otherwise shown:

Member	Size (inches)
Blocking	2 x 4 or such larger size as required when applied between framing members; smaller sizes when approved for a specific use.
Bridging	1 x 3 for use between members 2 x 12 and smaller; 2 x 3 for use between members larger than 2 x 12.
Corner bracing	1 x 4.
Furring	1 x 3.
Nailing strips	1 x 3 when used as shingle base for interior finish, otherwise 2-inch stock.
Sleepers	2 x 4.
Studs	2 x 4.

2.2.3 General Use Plywood. U.S. Department of Commerce, Prod. Std. PS 1, grade and thickness as follows: Grade C-D interior with exterior glue 1/2" thick w/span/index ratio of 24/0.

2.2.4 Structural Glued Laminated Members. Prod. Std. PS 56; normal working stresses of 2400 psi in bending 1600 psi in tension, 1500 psi in compression parallel to grain and 1,800,000 psi of E for "dry condition"; fabricated with wet-use adhesives. Members shall be Architectural Appearance Grade, sealed with a penetrating sealer, and individually wrapped in accordance with AITC 111. Members shall be complete with hardware for joining laminated members and for their connection to other construction.

2.3 Insulation.

2.3.1 Batt or Blanket. Mineral wool, Fed. Spec. HH-I-521, type III.

2.4 Sheathing. Either plywood or wood for wall sheathing; and either plywood or wood for roof sheathing.

2.4.1 Plywood. Prod. Std. PS 1, grade C-D with exterior glue for roof sheathing. Roof sheathing shall be 1/2-inch minimum thickness with an identification index of 16/0 or greater for supports 16 inches on center and 1/2-inch minimum thickness with an Identification Index of 24/0 or greater for supports 24 inches on center.

3. GRADING AND MARKING. Lumber, insulation, plywood, and structural glued laminated members shall bear the grademark, stamp or other identifying marks indicating grades of material and rules or standards under which produced. Such identifying marks on a material shall be in accordance with the rule or standard under which the material is produced, including requirements for qualifications and authority of the inspection organization, usage of authorized identification, and information included in the identification. The inspection agency for lumber shall be certified by the Board of Review, American Lumber Standards Committee, to grade species used. Except for plywood, lumber, and structural glued laminated members, bundle marking or certificates will be permitted in lieu of marking each individual piece.

4. SIZES. Lumber sizes shall conform to Prod. Std. PS 20, and unless otherwise specified, lumber shall be surfaced on four sides. Sizes for materials other than lumber shall conform to requirements of the rules or standards under which produced. Size references unless otherwise specified are nominal sizes, and actual sizes shall be within manufacturing tolerances allowed by the standard under which the product is produced.

5. MOISTURE CONTENT. At the time lumber and other materials are delivered and when installed in the work their moisture content shall be as follows:

Treated and untreated lumber 2 inches or less in thickness, 19 percent maximum.

Treated and untreated lumber over 2 inches in thickness, 25 percent maximum.

Materials other than lumber: In accordance with standard under which product is produced.

6. DELIVERY AND STORAGE. Materials shall be delivered to the site in undamaged condition, stored in fully covered, well ventilated areas, and protected from extreme changes in temperature and humidity.

7. SHOP DRAWINGS of structural glued laminated members, fabricated wood trusses and other fabricated structural members shall be submitted for approval in accordance with the SPECIAL PROVISIONS. Shop drawings shall indicate materials, details of construction, methods f fastening, and erection details. Shop drawings shall be accompanied by a reference to design criteria used and stress computations.

8. SAMPLES AND DESCRIPTIVE DATA. The following shall be submitted for approval.

Accessories and nails: Two of each accessory and four of each kind of nail with description of application for each.

Installation: Two square feet of each type, and manufacturer's installation instructions.

Sheathing: Two square feet of material to be used for each application and manufacturer's installation instructions.

Structural glued laminated members, and other fabricated structural members: Manufacturer's installation instructions and a list of successful installations of similar products.

9. PRESERVATIVE TREATMENT. To the extent indicated below, wood members and plywood shall be preservative-treated by pressure methods and so marked in accordance with the AWPB Standards. Unless otherwise specified it will include all wood members exposed to weather or in contact with soil, water, masonry or concrete, and all wood framing members directly above soil when the bottom elevation is 24 inches or less above soil. It will always include:

All wood members set into concrete regardless of location, including flush-with-deck wood nailers for roofs.

All wood members in contact with slabs-on-grade.

All wood members, except furring strips, in contact with founda- tion walls.

Furring strips used on walls or partitions below grade.

Furring strips used on exterior walls above grade.

All wood members used for rough framing or openings in exterior walls of concrete or masonry.

All wood members and plywood used in exterior exposed construc- tion such as steps, platforms, walkways and railings.

Except as otherwise specified, treatment shall be in accordance with AWPB LP-2, LP-3, or LP-4, at the option of the Contractor. Treatment of wood to be in contact with soil or water shall be in accordance with AWPB LP-55. Treatment of wood to be painted or to make contact with painted parts, and wood to which finishing materials will be fastened, shall be in accordance with AWPB LP-2 or LP-4. Treatment of wood used in conjunction with built-up roofing shall be in accordance with AWPB LP-2. Wood treated with oil-borne preservatives shall be clean, free from surface oil, and properly seasoned for use in building construction. Wood treated with water-borne preservatives shall be air-dried or kiln-dried to the moisture content specified for lumber and marked with the word "Dry". Treated wood which is cut shall be brush-coated with the preservative used in the original treatment.

10. INSTALLATION OF FRAMING AND MISCELLANEOUS WOOD MEMBERS.

10.1 General. Members shall be closely fitted, accurately set to required lines and levels, and rigidly secured in place. Nailing shall be in accordance with the Recommended Nailing Schedule as contained in the NFPA Publication, Manual for House Framing. Where detailed nailing requirements are not specified, nail size and nail spacing shall be sufficient to develop an adequate strength for the connection without splitting the members. Installation of timber connectors shall conform to applicable requirements of the NFPA Publication, National Design Specification for Stress-Grade Lumber and Its Fastenings. Members shall be framed for passage of ducts and pipes and shall be cut, notched, or bored in accordance with applicable requirements of the NFPA Publication, Manual for House Framing. Rafters and joists shall be set with crown edge up. Leveling of joists, beams, and girders on masonry or concrete shall be with slate or steel; on wood or metal leveling shall be without shims.

10.2 Structural Glued Laminated Members, and Other Fabricated Structural Members. Members shall be adequately braced before erection. Members shall be alined and all connections completed before removal of bracing. Individually wrapped members shall be unwrapped only after adequate protection by a roof or other cover has been provided. Scratches and abrasions of factory applied sealer shall be treated with two brush coats of the same sealer used at the factory.

10.3 Sill Plates shall be set level and square and anchor bolted at not more than 6 feet on centers and not more than 12 inches from each end of each piece. A minimum of two anchors shall be used for each piece.

10.4 Partition and Wall Framing. Unless otherwise shown, studs shall be spaced 16 inches on centers. Studs shall be doubled at openings. Unless otherwise indicated, headers for openings shall be made of two pieces of stud material set on edge or solid lumber of equivalent size, and corners shall be constructed of not less than three full members. End studs of partitions abutting concrete or masonry shall be anchored thereto with expansion bolts, one near each end of each stud and at intermediate intervals of not more than 4 feet. Plates of partitions resting on concrete floors shall be anchored in place with expansion bolts, one near each end of each piece and at intermediate intervals of not more than 6 feet between bolts, except anchoring into concrete may be with powder-driven threaded studs of suitable type and size and at 3 feet on center in lieu of bolts. Walls and bearing partitions shall be provided with double top plates and members lapped at least 2 feet and well spiked together. Blocking for fire-stopping shall be provided so that maximum dimension of any concealed space is not over 8 feet. Corner bracing shall be installed when required by type of sheathing used. Corner bracing shall be let into the exterior surfaces of the studs at an angle of approximately 45 degrees, shall extend completely over wall plates, and shall be secured at each bearing with two nails.

10.5 Ceiling Framing. Except where otherwise indicated joists shall have bearings not less than 4 inches on concrete or masonry and 1-1/2 inches on wood or metal. Joists, trimmers, headers, and beams framing into carrying members at the same relative levels shall be carried on joist hangers. Joists shall be lapped and spiked together at bearings or butted end-to-end with scab ties at joint and spiked to plates. Openings shall be framed with headers and trimmers. Headers carrying more than two tail joists and trimmers supporting headers carrying more than one tail joist shall be doubled, unless otherwise indicated. Joists built into masonry shall be fire cut.

10.6 Roof Framing With Rafters. Tops of Rafters shall form a true plane. Valley, ridge, and hip members shall be of depth equal to cut on rafters where practicable, but in no case less than depth of rafters. Valleys, hips, and ridges shall be straight and true intersections of roof planes. Necessary crickets and watersheds shall be formed. Rafters, except hip and valley rafters, shall be well spiked to wall plate and to ceiling joists. Openings in roof shall be framed

with headers and trimmers. Unless otherwise indicated, headers carrying more than two rafters and trimmers supporting headers carrying more than one rafter shall be double. Hip rafters longer than the available lumber shall be butt jointed and scabbed.

Valley rafters longer than the available lumber shall be double, with pieces lapped not less than 4 feet and well spiked together.

10.7 Bridging. Wood bridging shall have ends accurately bevel-cut to afford firm contact and shall be nailed at each end with two nails. Metal bridging shall be installed as recommended by the manufacturer. The lower ends of bridging shall be driven up tight and secured after roof sheathing has been laid and partition framing installed.

10.8 Blocking shall be provided as necessary for application of sheathing, wallboard, and other materials or building items, and to provide fire stopping. Blocking shall be cut to fit between framing members and rigidly nailed thereto.

10.9 Nailers and Nailing Strips shall be provided as necessary for the attachment of finish materials and for flush with deck mounting on roof decks. Strips shall be run in lengths as long as practicable, butt jointed, cut into wood framing members when necessary, and rigidly secured in place.

10.10 Wood Grounds shall be provided as necessary for attachment of trim, finish, and other work to plaster. Grounds shall be run in length as long as practicable, butt jointed, and rigidly secured in place.

10.11 Furring Strips shall be provided at the locations shown. Furring strips shall be installed at 16 inches on center unless otherwise shown, run in lengths as long as practicable, butt jointed and rigidly secured in place.

10.12 Rough Bucks and Frames in Masonry or Concrete shall be braced, set straight, true, and plumb, and secured with anchors near top and bottom of each wood member and at intermediate intervals of not more than 3 feet. Anchors for concrete shall be expansion bolts, and anchors for masonry shall be 3/16-inch by 1-1/4-inch steel straps extending not less than 8 inches into the masonry and turned down 2 inches into the masonry.

11. INSTALLATION OF INSULATION.

11.1 General. Insulation shall be installed only when construction has advanced to the point that remaining construction operations will not damage the insulation. For batt or blanket insulation, the actual installed thickness shall provide a U-value of 0.15 for the completed ceiling construction as determined in accordance with recognized methods in agreement with the ASHRAE Handbook of Fundamentals. Computations for establishing insulation thickness for the specified U-value shall be submitted for approval. Where electric outlets, ducts, pipes, vents or other utility items occur, insulation shall be placed on the cold or weather side of item. For batt or blanket acoustical insulation, thickness shall be as shown. Installation, except as otherwise specified, shall be in accordance with the manufacturer's approved instructions.

11.2 Batt or Blanket Insulation shall be installed between framing members; and insulation with facings shall be secured to the sides of the framing members to provide a continuous seal and so that the entire weight of the insulation will be carried by the framing members.

12. INSTALLATION OF SHEATHING.

12.1 Plywood Sheathing shall be applied with edges 1/8 inch apart at side joints and 1/16 inch apart at end joints, and nailed at supported edges at 6 inches on center and at intermediate supports 12 inches on center. Nailing of edges shall be 3/8 inch from the edges. Wall sheathing shall extend over top and bottom plates, and if applied horizontally the vertical joints shall be made over supports and staggered. Roof sheathing shall have face grain at right angles to supports, end joints made over supports, and end joints staggered.

12.2 Wood Sheathing. End joints shall be made over framing members and so alternated that there will be at least two boards between joints on the same support. Each board shall bear on at least three supports. Boards shall be nailed at each support using two nails for boards 8 inches and less in width and three nails for boards more than 8 inches in width.

* * * * *

SECTION 14B

FINISH CARPENTRY

Index

1. Applicable Publications
2. Materials
3. Grading and Marking
4. Sizes and Patterns
5. Moisture Content
6. Delivery and Storage
7. Shop Drawings
8. Samples and Descriptive Data
9. Installation of Trim
10. Installation of Woodwork Items

1. APPLICABLE PUBLICATIONS. The following publications of the issues listed below, but referred to thereafter by basic designation only, form a part of this specification to the extent indicated by the references thereto.

1.1 Federal Specification (Fed. Spec.).

FF-N-105B & Am-3	Nails, Brads, Staples, and Spikes: Wire, Cut and Wrought

1.2 U.S. Department of Commerce, Product Standard (Prod. Std.).

PS 1-74	Construction and Industrial Plywood
PS 20-70 & Am-1	American Softwood Lumber Standard

1.3 National Woodwork Manufacturers Association (NWMA) Standard.

I.S.4-70 & Addendum	Water-Repellent Preservative Non-Pressure Treatment for Millwork

1.4 Northeastern Lumber Manufacturers Association, Inc. (NELMA), Publication.

Standard Grading Rules for Northeastern Lumber (January 1974; Supplement No. 1; Errata)

1.5 Northern Hardwood and Pine Manufacturers Association (NHPMA), Publication.

Official Grading Rules for Eastern White Pine, Norway Pine, Jack Pine, Eastern Spruce, Balsam Fir, Eastern Hemlock and Tamarack (September 1, 1970, and Suppl. 1, 2)

1.6 Redwood Inspection Service (RIS), Publication.

Standard Specifications for Grades of California Redwood Lumber (November 1970; 2d Prtg, Sep 1975, incl Suppl Nos. 1 and 2)

1.7 West Coast Lumber Inspection Bureau (WCLB), Publication.

No. 16 Standard Grading and Dressing Rules for Douglas Fir, Western Hemlock, Western Red Cedar, White Fir, Sitka Spruce Lumber (Oct 1, 1975)

1.8 Western Wood Products Association (WWPA), Publication.

Standard Grading Rules for Western Lumber (Jul 1, 1974)

2. MATERIALS shall conform to the respective specifications and other requirements specified below.

2.1 Nails. Size and type best suited for purpose, hot dip galvanized or aluminum for exterior use, in accordance with Fed. Spec. FF-N-105 when applicable to type used. Screws for use where nailing is impracticable shall be size best suited for purpose.

2.2 Trim. Species and grade in accordance with SPECIES AND GRADE TABLE at end of this section; designs indicated for such items as handrails; patterns in accordance with grading rules for species for such items as door and window casings, fascias, baseboards, and caps; assembled and sanded at the mill insofar as practicable; maximum practicable lengths, finger joints permitted when finish is paint.

2.3 Woodwork Items.

2.3.1 Utility Shelving. Suitable species equal to or exceeding requirements of No. 3 Common white fir under WWPA, Standard Grading Rules, one-inch thick; or plywood, interior type, grade A-B, 1/2-inch thick, any species group.

3. GRADING AND MARKING. Plywood, lumber, and trim shall bear the grademark, stamp or other identifying marks indicating grades of material and rules or standards under which produced. Such identifying marks on a material shall be in accordance with the rule or standard under which the material is produced, including requirements for qualifications and authority of the inspection organization, usage of authorized identification, and information included in the identification. The inspection agency for lumber shall be certified by the Board of Review, American Lumber Standards Committee, to grade the species used. Except for plywood and lumber, bundle marking or certificates will be permitted in lieu of marking each individual piece.

4. SIZES AND PATTERNS. Lumber sizes and patterns shall conform to Prod. Std. PS 20, and unless otherwise specified, shall be surfaced on four sides. Sizes and patterns for materials other than lumber shall conform to requirements of the rules or standards under which produced. Size references, unless otherwise specified, are nominal sizes, and actual sizes shall be within manufacturing tolerances allowed by the standard under which the product is produced.

5. MOISTURE CONTENT at time of delivery and when installed in the work shall be as follows:

Treated and untreated trim	12 percent maximum
Other materials	In accordance with the standard under which the product is produced

6. DELIVERY AND STORAGE. Materials shall be delivered to the site in undamaged condition, stored in fully covered, well-ventilated areas, and protected from extreme changes in temperature and humidity.

7. SHOP DRAWINGS of fabricated items, special mill items, and woodwork items shall be submitted for approval in accordance with the SPECIAL PROVISIONS. Shop drawings shall indicate materials and details of construction, methods of fastening, and erection details.

8. SAMPLES AND DESCRIPTIVE DATA. The following shall be submitted for approval.

Shaped or molded trim: One linear foot of each kind.

Nails: Four of each kind for each application.

9. INSTALLATION OF TRIM. Trim shall be installed straight, plumb, level and with closely fitter joints. Blind nailing shall be used to extent practicable, and face nailing shall be set and stopped with a nonstaining putty to match the finish applied. Screws shall be used for attachment to metal; setting and stopping of screws shall be of same quality as required where nails are used. Joints shall be staggered, concealed, or placed in unobjectionable locations. Exterior joints shall be made water-resistant by careful fitting and calking. Molded work shall be coped at returns and interior angles and mitered at external corners. Intersections of flat work shall be shouldered to ease any inherent change in plane.

10. INSTALLATION OF WOODWORK ITEMS. Woodwork items shall be set at locations indicated and securely anchored to the supporting construction.

* * * * *

SECTION 14C

ALUMINUM DOORS AND FRAMES

Index

1. Applicable Publications
2. Field Measurements
3. Shop Drawings
4. Aluminum Doors and Frames, Hinged Type

1. APPLICABLE PUBLICATIONS. The following publications of the issues listed below, but referred to thereafter by basic designation only, form a part of this specification to the extent indicated by the references thereto.

1.1 Military Specification.

MIL-C-18480A (DOCKS) & Am-3	Coating Compound, Bituminous, Solvent, Coal Tar Base

1.2 American Society for Testing and Materials (ASTM) Publications.

A 366-72	Steel, Carbon, Cold-Rolled Sheet, Commercial Quality
A 525-75	Steel Sheet, Zinc-Coated (Galvanized) by the Hot-Dip Process, General Requirements
B 137-45 (R 1972)	Measurement of Weight of Coating on Anodically Coated Aluminum

2. FIELD MEASUREMENTS. The Contractor shall verify all measurements at the building site and shall be responsible for dimensions, fitting, and the proper attachment of items directly connected with the door installation.

3. SHOP DRAWINGS shall be submitted for approval in accordance with the SPECIAL PROVISIONS, and the Contractor shall receive the approval before delivery of doors. A schedule showing the location of each door shall be submitted with the shop drawings. Drawings shall indicate elevations of each door type, details and method of anchorage to opening; details of construction; method of assembling sections; location and installation hardware; size, shape, and thickness of materials; joints and connections. Shop drawings for overhead, doors shall show details of tracks, rollers, fittings, and other attachments.

4. ALUMINUM DOORS AND FRAMES, HINGED TYPE.

4.1 General. Glazed aluminum stile-and-rail doors shall be of the size and design indicated. Adjacent glass enclosures, where indicated, shall be of the same style and design as the doors. Aluminum frames shall be furnished with the doors, enclosures, sidelights, and transoms.

4.2 Metal. Sections for doors shall be manufactured from 6063-T5 extruded aluminum alloy. The nominal wall thickness of aluminum for doors shall be not less than 0.125 inch except that the molding shall be not less than 0.050 inch. Screws, nuts, washers, rivets, and other miscellaneous fastening devices shall be of hardened aluminum, stainless steel, or other corrosion-resistant material.

4.3 Hardware shall conform to section: HARDWARE, BUILDERS'. Doors shall be furnished with hardware factory installed. Reinforcement for hardware shall be provided, shall be concealed, and shall be secured in place in accordance with the hardware manufacturer's recommendations.

4.4 Protection from Dissimilar Materials. In addition to the clear coating, aluminum surfaces that will contact masonry, concrete, wood, or steel shall be back-painted before erection with alkali-resistant paint conforming to Military Specification MIL-C-18480.

4.5 Frames shall be extruded tube or open channel shapes and shall be manufactured from 6063-T5 aluminum alloy not less than 0.125 inch thick for frames 1-3/4 by 4 inches and not less than 0.093 inch thick for frames 1-3/4 by 4-1/2 inches. Frames shall be securely anchored to adjoining construction. Wall anchors shall be located near bottom and top of frame and at intermediate points not over 3 feet on centers. Frames to receive fixed glass shall have removable glass stops and beads.

4.6 Doors shall be fabricated either from extruded aluminum hollow seamless tubes or from a combination of open-shape members interlocked or welded together. Top and bottom rails shall be welded to the stiles. Joints shall be milled to a hairline watertight fit, reinforced, and welded. Welding shall be done on concealed surfaces and in

such manner as not to create blemishes on exposed surfaces. Exposed screws or bolts will be permitted only at inconspicuous locations and shall have heads countersunk. Doors shall have extruded aluminum snap-in glass stops with vinyl insert. Glass is specified in section: GLASS AND GLAZING.

4.7 Weatherstripping shall be applied to stiles, heads, and bottoms of exterior doors. Weatherstripping shall be the type standard with the manufacturer and shall be easily replaced without special tools. Weatherstripping at meeting rails of pairs of doors shall be adjustable.

4.8 Finish. Aluminum surfaces shall be provided with a satin finish and an anodic oxide coating. The coating shall be dark brown color. Coating shall have a minimum film thickness of 0.0004 inch with a minimum coating weight of 17 milligrams per square inch when tested in accordance with ASTM Test Method B 137. Coating shall be sealed with hot water.

4.9 Protective Coating. After cleaning and finishing and prior to shipment, a clear, nonyellowing, colorless coating shall be applied to all surfaces of aluminum.

4.10 Installation. Frames shall be set accurately in position, plumb, square, level and in alinement, and shall be securely anchored in accordance with manufacturer's directions and approved shop drawings. Doors shall be hung accurately with proper clearances. Final adjustement shall be made for proper and easy operation of the door after glazing.

4.11 Protection and Cleaning. Doors shall be protected from damage during transportation and stored under cover at the jobsite. After installation, doors and frames shall be protected from damage during subsequent construction activities. Upon completion, metal surfaces shall be cleaned, following the procedure recommended by the door manufacturer.

* * * * *

SECTION 14D

WOOD DOORS

1. APPLICABLE PUBLICATIONS. The following publications of the issues listed below, but referred to thereafter by basic designation only, form a part of this specification to the extent indicated by the references thereto.

1.1 Fir & Hemlock Door Association Publication.

FHDA/5-75	Industry Standard for Douglas Fir, Western Hemlock, and Sitka Spruce Doors and Blinds

1.2 National Woodwork Manufacturers Association (NWMA) Industry Standards.

I.S.1-74 & Addendum	Wood Flush Doors
I.S.4-70 & Addendum	Water-Repellent Preservative Non-Pressure Treatment for Millwork

2. GENERAL. Doors shall be of the type, size, and design shown. Top and bottom edges of door shall be sealed with a clear water-resistant varnish or a clear water-resistant sealer prior to shipment. Doors shall be stored in fully covered, well ventilated areas and protected from extreme changes in temperature and humidity.

3. PREFITTING AND FACTORY-PRIMING OR FACTORY-FINISHING. Doors may be furnished prefit in accordance with the standards under which they are produced. Doors with surfaces to receive natural finish may be furnished factory-finished. After approval of the methods and materials to be used for finishing in the factory, the doors so processed will be exempt from the corresponding requirements of section: PAINTING.

4. ADHESIVES AND BONDS shall be in accordance with NWMA Standard I.S.1, using requirements for type II doors for interior doors. Adhesive for doors to receive a natural finish shall be nonstaining.

5. WARP TOLERANCES shall be in accordance with NWMA Standard I.S.1.

6. SHOP DRAWINGS shall be submitted for approval in accordance with the SPECIAL PROVISIONS. Shop drawings shall indicate the location of each door, elevation of each type of door, details of construction, marks to be used to identify the doors, location and extent of hardware blocking, and if factory-finished, materials and methods to be used.

7. MARKING. Each door shall bear a stamp, brand, or other identifying mark indicating quality and construction of the door. The identifying mark or a separate certification shall include name of the inspection organization, identification of the standard on which the construction of the door is based, identity of the plant to which the stamp was issued, identification of the standard under which preservative treatment, if used, was made, identification of the doors having a type I glue bond, and a declaration of compliance by the plant.

8. FLUSH DOORS. Except as otherwise specified, flush doors shall conform to NWMA Standards I.S.1. or I.S.5. For stain or natural finish, doors shall be Premium grade, book matched, birch veneered in accordance with NWMA Standard I.S.1. Solid core doors shall have mat-formed composition core conforming to NWMA Standard I.S.1.

9. INSTALLATION. Doors shall be installed only after completion of all other work which would raise the moisture content of the doors or damage the surface of the doors. Doors shall be fit, hung and trimmed as required by the openings they will close. Doors shall have a clearance of 1/8 inch at the sides and top and shall have a bottom clearance of 1/4 inch over thresholds and 1/2 inch at other locations unless otherwise shown. The lock edge of doors shall be beveled at the rate of 1/8 inch in 2 inches. Cuts made on the job shall be sealed immediately after cutting, using a clear water-resistant varnish or sealer.

* * * * *

SECTION 14E

STEEL DOORS AND FRAMES

Index

1. Applicable Publications
2. Shop Drawings
3. General Requirements for Doors and Frames
4. Construction of Frames
5. Construction of Doors
6. Delivery and Storage
7. Installation

1. APPLICABLE PUBLICATIONS. The following publications of the issues listed below, but referred to thereafter by basic designation only, form a part of this specification to the extent indicated by the references thereto.

1.1 American National Standards Institute, Inc. (ANSI) Standards.

A115.1-1971	Mortise Door Locks for 1-3/4" Doors
A115.2-1971	Bored or Cylindrical Locks for 1-3/4" Doors
A115.3-1971	Bored or Cylindrical Locks for 1-3/8" Doors
A115.4-1971	Lever Extension Flush Bolts
A123.1-1974	Nomenclature for Steel Doors and Steel Door Frames

1.2 American Society for Testing and Materials (ASTM) Publications.

A 366-72	Steel, Carbon, Cold-Rolled Sheet, Commercial Quality
A 569-72	Steel, Carbon (0.15 Maximum, Percent) Hot-Rolled Sheet and Strip, Commercial Quality

2. SHOP DRAWINGS shall be submitted for approval in accordance with the SPECIAL PROVISIONS. Shop drawings shall indicate the location of each door and frame, elevation of each type of door and frame, details of construction, method of assembling sections, location and extent of hardware reinforcement, hardware locations, type and location of struts and anchors for frames, and thickness of metal. Shop drawings shall include specifications for shop painting including pretreating and painting materials and processes, and catalog cuts or descriptive data for the weatherstripping and thresholds.

3. GENERAL REQUIREMENTS FOR DOORS AND FRAMES.

3.1 Steel. Doors and frames shall be factory fabricated from steel conforming to ASTM Specifications A 366 or A 569, stretcher level degree of flatness, pickled and oiled if of hot-rolled material, and Manufacturer's Standard Gages specified hereinafter for the various uses.

3.2 Shop Painting. After fabrication, doors and frames shall be thoroughly cleaned, pretreated to provide a strong bond between metal and paint and shop painted with a rust inhibiting primer paint.

3.3 Workmanship. The finished items shall be rigid, neat in appearance, and free from defects, warp, or buckle. Molded members shall be sharp in detail, straight, and true. Corner joints shall be coped or mitered, well-formed, and in true alinement. Exposed welded joints shall be dressed smooth.

3.4 Preparation for Hardware. Doors and Frames shall be prepared for hardware in conformance with the templates provided under section: HARDWARE; BUILDERS'; the requirements of American National Standards A115.1, A115.2, A115.3, A115.4, and A123.1; and the application locations specified in section: HARDWARE; BUILDERS'. Cutting, reinforcing, drilling, and tapping of doors and frames shall be done at the factory, except drilling and tapping for surface applied hardware will be done in the field when the hardware is applied. In addition to the plaster guards required for strike reinforcement in the referenced American National Standards, plaster guards shall be provided on the door frames for the hinge reinforcements. Door frames shall be prepared for silencers, and rubber silencers shall be provided with the frames. Reinforcement of doors and frames for hardware shall be as specified in table I at the end of this section.

3.5 Weatherstripping for head and jamb protection shall be spring-tension type or integral elastomeric type. Spring-tension type with weatherstripping shall have hemmed edges and shall be of bronze. Spring bronze shall be not less than 0.008 inch thick. Integral elastomeric type weatherstrip shall be of synthetic rubber, vinyl or neoprene standard with the manufacturer of the door frame. The integral elastomeric type weatherstripping shall be installed at the factory or on the jobsite in accordance with the door frame manufacturer's recommendations. Weatherstripping for bottom of doors shall be of the surface-mounted sweep type consisting of 1/8-inch thich neoprene in an extruded bronze housing not less than 0.070 inch thick. Weatherstripping for meeting stiles of double doors shall be surface mounted neoprene-seal type consisting of 1/8-inch thick neoprene in an extruded bronze housing not less than 0.065 inch thick.

3.6 Thresholds shall be extruded bronze, flat type with a fluted top, and shall provide the proper clearance and an effective seal with the specified weatherstripping.

3.7 Louvers. Where indicated, doors shall be provided with full louvers. Louvers shall be sightproof type, inserted into the doors. Inserted louvers shall be stationary as shown, and formed of not less than 20-gage steel. Blades of inserted louvers shall be welded or tenoned to frame and the entire assembly shall be fastened to the door to present a neat appearance and to be nonremovable from the outside of the door. Insect screens shall be a removable type with 18 x 16 mesh aluminum or bronze cloth.

4. CONSTRUCTION OF FRAMES. Pressed steel frames for doors and other openings shall be of the combination buck, frame, and trim type of the sizes and details as shown. Gages of metal shall be not lighter than 16-gage. Frames shall be knockdown type or welded unit type.

4.1 Welded Unit Type Frames shall have headers and jambs secured at the corners either by internal welding of faces or by welded splice plates and shall be further secured at the rabbet either by welding or by mechanical interlock. As an alternate, the headers and jambs shall be secured at the corners by external welding of faces and grinding smooth. Faces of frames at junction of head and jamb shall present neat line joints.

4.2 Knockdown Type Frames shall have joints that interlock rigidly so as to maintain alinement of parts and provide functionally satisfactory performance of completed frames when field assembled. Faces of frames at junction of head and jambs shall present neat line joints.

4.3 Anchors. Frames shall be provided with a minimum of three wall anchors per jamb as required for the adjoining wall construction, and anchors for attachment of frame to the floor. Anchors shall be of not less than 18 gage steel or 3/16 inch diameter wire.

5. CONSTRUCTION OF DOORS. Doors shall be of the type, size, and design shown. Door clearances shall not exceed the following: 1/8 inch at jambs and heads; 1/4 inch at meeting stiles of pair of doors; and 3/4 inch at bottom measured from finished floorline. Exterior doors shall have top and bottom edges closed flush and sealed against water penetration.

5.1 Flush Doors shall be of full flush construction. Doors shall be internally reinforced to resist impact and to insure flatness of finished surfaces by steel members welded in place, water-resistant honeycomb core glued in place, or rigid insulation core glued or foamed in place. Doors with metal reinforcing shall have sound deadening material applied to the interior of the door to eliminate metallic sound incident to normal door operation. Honeycomb core material shall have a crushing strength of not less than 4,000 p.s.f., and the lamination shall withstand not less than 1,500 p.s.f. surface shear. Foam insulation core material shall have a compressive strength of not less than 1,500 p.s.f. and a shear strength of not less than 18 p.s.i., shall have an insulation-to-steel strength at least equal to the strength of the insulation, shall be dimensionally stable within plus or minus 5 percent of volume after 24-hour exposure to temperatures ranging from minus 15 degrees F. to 165 degrees F., shall have no voids exceeding 1/2 inch in any direction, and shall have a density of not less than 1.0 pound per cubic foot. Foam insulation shall be rated as self-extinguishing when tested in accordance with ASTM Test Method D 1692. Solid mineral insulation core material shall have a density of not less than 20 pounds per cubic foot.

5.1.1 Full Flush Construction shall have face sheet of not less than 18-gage steel, shall have no seams or joints on door faces, and shall have top and bottom closed with a recessed channel or a flush end closure reatment.

6. DELIVERY AND STORAGE. To provide protection during shipment, welded unit type frames shall be strapped together in pairs with heads at opposite ends or provided with temporary steel spreaders at the bottom of each frame; and knockdown type frames shall be securely strapped in bundles. Materials shall be delivered to the site in undamaged condition, stored out of contact with the ground and under a weathertight covering, permitting good air circulation. Whenever they become evident, abraded, scarred or rusty areas shall be cleaned and touched up with the paint used for the shop painting.

7. INSTALLATION. Frames shall be plumbed, leveled, and rigidly secured in place. Temporary spreaders shall be installed until the wall at the frame is completed and the frame is securely anchored in its final position. Wall anchors on doorframes shall be installed approximately at the hinge and strike levels. Doors shall be installed in conjunction with the application of hardware. Weatherstripping and tresholds shall be installed at exterior door openings to provide a weathertight installation.

TABLE I. REINFORCEMENT

Hardware Item	Minimum Gage		Minimum Size, Inches
Hinges	Door	10	8 x 1-5/8 (1-3/4-inch thick door)
	Frame	10	8 x 1-5/8 (1-3/4-inch thick door)
	Door	12	8 x 1-1/4 (1-3/8-inch thick door)
	Frame	12	8 x 1-1/4 (1-3/8-inch thick door)
Mortise Locksets and Deadlocks	Door	14	10 x 3-3/4
	Frame	14	6-1/2 x 1-1/2 (1-3/4-inch thick door)
	Frame	14	6-1/2 x 1-1/8 (1-3/8-inch thick door)
Flush Bolts and Chain and Foot Bolts	Door	14	7-1/2 x 1-1/4
	Frame	14	4 x 1
Surface-Applied Closers	Door	12	16 x 4-1/2
	Frame	12	18 x width of face of head and 8 x width of jamb, or stop as required
Hold-Open Arms	Door	12	14 x 4
	Frame	12	14 x width of face, jamb, or stop as required
Panic Devices	Door	14	As required by templates
	Frame	14	As required by templates

Lighter gages may be used if formed to a channel-shape or a U-shape that provides rigidity equivalent to that of flat reinforcements of specified gage. Gage and size of reinforcement for hardware items not listed above shall be as required by the templates for those items.

* * * * *

SECTION 14F

RESILIENT FLOORING

Index

1. Applicable Publications
2. Submittals
3. Delivery and Storage
4. Environmental Conditions
5. Extra Stock
6. Materials
7. Condition of Surfaces
8. Application
9. Cleaning
10. Protection

1. APPLICABLE PUBLICATIONS. The following publications of the issues listed below, but referred to thereafter by basic designation only, form a part of this specification to the extent indicated by references thereto.

1.1 Federal Specifications.

L-F-475A & Am-1 & Int. Am-2	Floor Covering Vinyl, Surface (Tile and Roll), with Backing
P-F-00430B (GSA-FSS) & Am-2	Floor Finish, Water Emulsion (For Use on Light Colored Floors)
P-W-155B	Wax, Floor, Water-Emulsion
SS-W-40A & Int. Am-1 (GSA-FSS) & Notice 1	Wall Base; Rubber, and Vinyl Plastic
MMM-A-110B & Int. Am-2	Adhesive, Asphalt, Cut-Back Type (for Asphalt and Vinyl Asbestos Tiles)
MMM-A-115B	Adhesive, Asphalt, Water Emulsion Type (for Asphalt and Vinyl Asbestos Tile)

2. SUBMITTALS.

2.1 Samples. The following samples of flooring materials in the colors indicated shall be submitted for approval before the work is started.

(1) Sheet coverings - two 12-inch-square pieces of each type.

(2) Base - three 9-inch lengths of each type.

(3) Edging strips - three 9-inch lengths of each type.

2.2 Manufacturer's Installation Procedures. Submit in triplicate, current copies of the flooring manufacturer's recommendation standard installation procedure for each type of flooring material for approval before work s started.

2.3 Certified Laboratory Test Reports. Before delivery of materials, submit for approval, in accordance with the SPECIAL PROVISIONS, certified copies of the reports of all tests required in referenced publications. The testing shall have been performed by an approved independent laboratory, within one year of submittal of reports for approval. Test reports on a previously tested material shall be accompanied by notarized certificates from the manufacturer certifying that the previously tested material is of the same type, quality, manufacturer, and make as that proposed for this project.

2.4 Manufacturer's Maintenance Data and Instructions. Submit in triplicate, upon completion and prior to acceptance of the work, current copies of the flooring manufacturer's printed recommendations on maintenance methods and products for each type of flooring material.

3. DELIVERY AND STORAGE. Materials shall be delivered to the job in the manufacturers' original unopened containers, with the brands and names clearly marked thereon. All materials shall be carefully handled and shall be stored in their original containers at not less than 70 degrees F for at least 48 hours before work is started. Containers shall not be opened until inspected and accepted.

4. ENVIRONMENTAL CONDITIONS. Spaces in which flooring work is to be performed shall be maintained between 70 degrees F and 90 degrees F at the floor level for at least 48 hours prior to starting the work, during the time work is performed, and for at least 48 hours after the work is completed. A minimum temperature of 55 degrees F shall be maintained thereafter. Adequate ventilation shall be provided to remove moisture and fumes from the area.

5. EXTRA STOCK. Upon completion of work, deliver additional tile and base to the Government for use in repairs and maintenance. Additional materials of each color shall be from the same lot as the materials installed. Furnish tile and base in original boxes, properly marked, in quantities listed below, and with colors in approximately the same proportions as installed materials.

(1) Wall base: 4 lineal feet.

(2) Premolded external base corners: 2 pieces.

6. MATERIALS.

6.1 General. Flooring, base, and edging strips shall be provided in colors as indicated. Accessories shall be the approved standard products of the manufacturer of the flooring. The color and pattern shall be uniformly distributed throughout each sheet. Variation in shades and off pattern matches between containers will not be acceptable. Flooring in any one continuous area or that used in replacement of damaged flooring, in a continuous area, shall be from the same lot and have the same shade and pattern. All materials specified to be of a type as recommended by the manufacturer shall be subject to approval.

6.2 Sheet Vinyl Flooring. Specification L-F-475, type II, grade A, with inorganic backing. Sheet vinyl flooring shall be not less than 72 inches wide.

6.3 Wall Base. Specification SS-W-40, type II, style A. Base shall be 4 inches high, 0.125-inch thick, in plain colors. Base shall be sufficiently flexible to conform to irregularities in walls, partitions, and floors. Premolded corners in matching size, shape, and color shall be provided for all right-angle external and internal corners.

6.4 Underlayment. Latex type as recommended by flooring manufacturer.

6.5 Adhesives.

6.5.1 Adhesive for Sheet Vinyl Flooring. Type as recommended by flooring manufacturer.

6.5.2 Adhesive for Vinyl Wall Base. Special base adhesive as recommended by wall base manufacturer.

6.6 Crack Filler.

6.6.1 Crack Filler for Concrete Flood Surfaces. Nonshrinking cement mortar.

6.6.2 Carck Filler for Walls. Type as recommended by the wall base manufacturer.

6.7 Polish. Specifications P-W-155 or P-F-430.

6.8 Edging Strips. Beveled vinyl plastic, as approved.

7. CONDITION OF SURFACES. Floor surfaces that are to receive flooring shall be clean, thoroughly dry, smooth, firm, and sound; and they shall be free from oil, paint, wax, dirt, curing compounds or any other damaging material.

7.1 Preparation of Surfaces.

7.1.1 Concrete Floor Surfaces. All ridges or other uneven surfaces shall be ground smooth. Cracks 1/16-inch or wider shall be cut out and filled with a crack filler as specified for this application. Latex underlayment shall be provided to fill the remaining holes, cracks, and depressions, and for smoothing, leveling, or feather edging the concrete. Chalky or dusty surfaces shall be primed with an approved primer, recommended by the flooring manufacturer after cleaning and removal of all loose particles.

7.2 Moisture Test for Concrete Floors. After concrete floor surfaces have been cleaned, small patches of adhesive to be used shall be spread in several locations in each room and allowed to dry or "set" overnight. If the "set" adhesive can be peeled easily from the floor surfaces, the floor is not sufficiently dry. The test shall be repeated until the adhesive adheres properly. When the adhesive adheres tightly to the floor surface, the tile shall be applied. If concrete floors are in contact with the ground or over unventilated crawl spaces, small patches of primer shall be used in lieu of adhesive to test for moisture.

8. APPLICATION.

8.1 General. Installation shall be deferred until all other work that might cause damage to the flooring has been completed. Flooring and accessories shall be applied in accordance with the approved installation procedure. Work shall be performed by workmen thoroughly experienced in the application of such flooring. Adhesives shall be as specified for the specific application. Adhesives shall be applied in accordance with the adhesive manufacturer's printed directions, unless specified or directed otherwise. Flooring shall be cut to, and fitted around, all permanent fixtures, builtin furniture and cabinents, pipes, and outlets. Edges shall be cut, fitted, and scribed to walls and partitions after field flooring has been applied. Edging strips shall be provided where flooring terminates at points higher than the contiguous finished flooring, except at doorways where thresholds are provided. Plastic strips shall be secured with adhesive.

8.2 Application of Sheet Vinyl Flooring. Sheet vinyl flooring shall be fitted to the room by approved methods, including hand cutting, straight scribing, or pattern scribing, as necessary to suit job conditions. After flooring is properly fitted, one-half of a sheet at a time shall be rolled back and adhesive spread on the floor surface. Flooring shall be embedded in the spread adhesive and rolled with a three-section roller weighing not less than 100 pounds, starting in the middle of the sheet and rolling outward to expel any trapped air, and to thoroughly embed the flooring in the adhesive. Seams shall be cut by overlapping or underscribing, as recommended by the manufacturer. Seams shall be rolled thoroughly and weighted with sandbags, where necessary, to insure complete adhesion.

8.3 Application of Vinyl Wall Base. Wall base shall be applied after flooring has been completed, and the wall surface to which the base is to be applied is thoroughly dry. All cracks and voids in the wall shall be filled with a crack filler as specified for this application. Irregular surfaces shall be brought to a smooth finish with a satisfactory smoothing compound. Special base adhesive shall be applied to the back of the base with a notched trowel, leaving approximately 1/4-inch bare space along the top edge of base. The base shall immediately be pressed firmly against the wall and moved gently into place, making sure that the toe is in contact with the floor surface and the wall. The entire surface of the base shall be rolled with a hand roller, and then the toe of the base shall be pressed firmly against the wall with a straight piece of wood. Internal and external corners shall be formed with base materials as specified herein.

9. CLEANING. Immediately upon completion of the installation in a room or an area, flooring and adjacent surfaces shall be dry-cleaned with an approved cleaner to remove surplus adhesive. No sooner than 5 days after installation, flooring shall be washed with an approved nonalkaline cleaning solution, rinsed thoroughly with clear cold water, and given two coats of polish. After each polish coat, floors shall be buffed to an even luster with an electric polishing machine. Bases and stair treads shall be cleaned but not polished.

10. PROTECTION. From the time of laying until acceptance, flooring shall be protected from damage. Defects which develop, such as damaged, loose, broken, or curled edges, shall be removed and replaced prior to final inspection.

* * * * *

SECTION 14G

GYPSUM WALLBOARD (DRY WALL)

Index

1. Applicable Publications
2. General
3. Materials
4. Shop Drawings and Installation Details
5. Delivery and Storage
6. Waterproofing
7. Ceiling Framing Systems
8. Furring
9. Steel Framing, Option
10. Steel Framing
11. Framed Openings
12. Application
13. Attachment
14. Joint and Fastener Concealment
15. Corner Treatment

1. APPLICABLE PUBLICATIONS. The following publications of the issues listed below, but referred to thereafter by basic designation only, form a part of this specification to the extent indicated by the references thereto.

1.1 Federal Specifications.

FF-B-575C	Bolts, Hexagon and Square
FF-B-588C & Am-1	Bolt, Toggle: and Expansion Sleeve, Screw
FF-N-105B & Am-3	Nails, Brads, Staples and Spikes: Wire, cut and Wrought
FF-S-325 & Int. Am-3 (GSA-FSS)	Shield, Expansion; Nail, Expansion; and Nail, Drive Screw (Devices, Anchoring, Masonry)
QQ-S-698 & Am-3	Steel, Sheet and Strip, Low-Carbon
QQ-S-700c & Am-1	Steel Sheet and Strip, Medium and High Carbon
QQ-S-775E	Steel Sheets, Carbon, Zinc-Coated (Galvanized) by the Hot-Dip Process
QQ-W-461g	Wire, Steel, Carbon (Round, Bare, and Coated)
SS-L-30D & Int. Am-2	Lath, and Board Products, Gypsum
WW-H-171D	Hangers and Supports, Pipe

1.2 American National Standards Institute, Inc. (ANSI) Standard.

A97.1-1965	Standard Specifications for the Application and Finishing of Wallboard

2. GENERAL. Except where otherwise indicated or specified, the work shall conform to American National Standard A 97.1. Gypsum wallboard of the types indicated or specified shall be applied in locations as follows.

2.1 Fire-Retardant Gypsum Wallboard. The ceilings and walls of all areas shall be constructed of fire-retardant gypsum wallboard.

2.2 Steel Framing for non-load-bearing walls and partitions is included in this section as an option to wood framing. Gypsum wallboard shall be screw-applied to steel members.

2.3 Steel Furring for ceilings and walls as well as ceiling framing systems are included in this section. Gypsum wallboard shall be screw applied to steel members.

2.4 Wood Framing, Furring, Blocking, and Nailers for attaching wallboard are specified under section: ROUGH CARPENTRY.

3. MATERIALS.

3.1 Adhesives for the following uses shall be of the types recommended in writing by the manufacturer, except that use of adhesives containing asbestos fibers will not be permitted.

3.1.1 Joint and Fastener Concealment.

(a) Embedding compound for first and second coats.

(b) Finishing compound for final coat.

3.2 Channels shall be formed from steel sheets conforming to Federal Specification QQ-S-700 or Federal Specification QQ-S-775, class e, as applicable. Channels shall be galvanized or coated with manufacturers standard protective coating and shall conform to the following dimensions.

(1) Ceiling and Floor Runner Channels shall be not less than 0.021-inch nominal thickness with 1-1/4-inch flanges and channel web sized to nest with comparable steel studs hereinafter specified.

(2) Furring Channel shall be not less than 0.021 inch nominal thickness, hat-shaped in section with 1-3/8-inch-wide crown for wallboard attachment. Hat crown shall be 7/8 inch deep and brim shall be formed with 1/2-inch flanges stiffened with 1/8-inch folded edge. Flanges may be 3/8 inch when 1/8 inch stiffened edge is upturned 90 degrees from the brim. Crown shall be slightly sloped for nesting channels.

(3) Main Runner Channel shall be 1-1/2-inch hot- or cold-rolled steel channel. Hot-rolled channel shall weigh not less than 1.12 pounds per linear foot. Cold-rolled channel shall be not less than 0.059 inch nominal thickness with flanges at least 19/32 inch wide.

3.3 Fasteners.

(1) Bolts shall conform to Federal Specification FF-B-575.

(2) Expansion Shields shall conform to Federal Specification FF-S-325, group I, II, or III, of the type and class applicable.

(3) Nails shall conform to Federal Specification FF-N-105. Wallboard nails shall be type II, style 19, with mechanically deformed shank, 1-3/8 inch-length for 5/8-inch wallboard.

(4) Powder-Driven Fasteners may be used only when approved in writing.

(5) Screws for wallboard attachment shall be shouldered flat-head design for use with special power-driven tools.

(a) Wood Screws shall be not less than 1-1/8 inches long.

(b) Metal Screws shall be not less than one inch long with self-tapping threads and self-drilling points.

(6) Toggle Bolts shall conform to Federal Specification FF-B-588, type and class best suited for the purpose.

3.4 Gypsum Wallboard shall conform to Federal Specification SS-L-30, type III, class 1, style 3, taper-edged, and of the grade and form hereinafter specified. Wallboard shall be supplied in 48-inch widths and in such lengths as will result in a minimum of joints.

(1) Exterior Wallboard shall be 5/8 inch thick for single-ply application. Firecode Exterior Ceiling Board with fire-rated core as manufactured by U.S. Gypsum Co. or approved equal. Provide aluminum H molding for all panel edge joints.

(2) Fire-Retardant Wallboard shall be grade X, form a, 5/8 inch thick.

3.5 Hangers, Tie Wires, and Clips.

(1) Hangers supporting main runner channels shall be soft steel wire not less than 0.1620-inch nominal diameter (8-gage) conforming to Federal Specification QQ-W-461, AISI number 1010, class 2 zinc coating. Flat steel hangers, one by 3/16, with zinc coating, may be substituted for the wire hangers.

(2) Te Wires for splicing stud furring or securing stud furring to main runner channels or to structural members shall galvanized steel of not less than 0.0915-inch nominal diameter (13-gage). Tie wires for splicing hat-shaped furring channels or securing hat-shaped furring channels to main runner channels or to structural members shall be galvanized steel of not less than 0.0625-inch nominal diameter (16-gage).

(3) Clips used in lieu of tie wire shall be galvanized steel equivalent in holding power to that provided by tie wires for the specific application.

3.6 Metal Trim features for wallboard shall be formed from zinc-coated steel not lighter than 0.0217-inch nominal thickness (26-gage) and shall conform to Federal Specification QQ-S-775, type I, class d or e. Metal trim shall be in the following shapes and sizes.

(1) Casing Beads shall be channel shaped with a concealed wing not less than 7/8 inch wide and an exposed wing. Exposed wing may be covered with paper cemented to metal and shall be suitable for joint treatment.

(2) Corner Beads shall be angle-shaped with wings not less than 7/8 inch wide and perforated for nailing and joint treatment or with combination metal and paper wings bonded together, not less than 1-1/4 inches wide, and suitable for joint treatment.

(3) Edge Beads for use at perimeter of ceilings shall be angle-shaped with wings not less than 3/4 inch wide. Concealed wing shall be perforated for nailing and exposed wing edge folded flat. Exposed wing may be factory finished in a white color.

3.7 Reinforcing Tape shall be as recommended in writing by the manufacturer of the wallboard.

3.8 Spacers used with steel-stud ceiling furring shall be nails conforming to Federal Specification FF-N-105, style 7 or 10. Nails shall be 16d common for 3-5/8-inch studs, 8d common for 2-1/2-inch studs, and 5d coated for 1-5/8-inch studs.

3.9 Steel Studs for wall framing and ceiling furring shall be formed from steel sheets conforming to Federal Specification QQ-S-698 and galvanized or coated with manufacturer's standard protective coating. Studs shall be C-shaped, not less than 0.021-inch nominal thickness with web dimension of 2-1/2 inches or 3-5/8 inches for wall framing and 1-5/8 inches, 2-1/2 inches, or 3-5/8 inches for ceiling furring. Stud flanges shall be not less than 1-5/16 inches wide, and each flange shall, in addition, have a stiffening lip bent parallel to the stud web. Stiffening lips shall be at least 1/4 inch wide with turned or folded edges. Where required for utility lines and/or wires, stud webs shall have preformed holes or knockouts not larger than 3 inches spaced not less than 6 inches on centers, except that holes or knockouts for 1-5/8-inch studs shall be not larger than 1-1/2 square inches. Holes or knockouts shall be centered on the longitudinal axis of the web and shall be not more than 1-5/8 inches across the longitudinal axis, except that holes or knockouts for 1-5/8-inch studs shall not exceed 1-1/8 inches.

4. SHOP DRAWINGS AND INSTALLATION DETAILS shall be submitted for approval in accordance with SPECIAL PROVISIONS for ceiling framing and furring, for special wall framing, and for framed openings in walls and ceilings.

5. DELIVERY AND STORAGE. Wallboard delivered prior to use shall be stored within a completely enclosed structure or off the ground and completely enclosed within a weathertight covering. Wallboard shall be dry, free of warpage, and with bundling tape intact immediately prior to use. Application shall commence only after the structure is completely weathertight.

6. WATERPROOFING. Before erection, edges of gypsum wallboard adjoining tile bases, and cut edges in shower areas shall be treated with a waterproofing agent approved by the manufacturer of the wallboard, or treated with two coats of sizing varnish. The treatment shall extend not less than 4 inches out on the paper on both sides of the board.

7. CEILING FRAMING SYSTEMS. Framing for furred ceilings shall be installed at the locations indicated as an option to wood furring and shall conform to the following.

7.1 Suspended Ceilings.

(1) For Spans Up to and Including 4 Feet on Centers. Ceiling framing shall consist of 1-1/2-inch steel main runner channels suspended plumb from structural slab or frame by hanger wires or straps spaced at not more than 4 feet on centers. Hanger wires shall be properly anchored to framing and shall receive three full turns around itself. Hanger strap shall be hung plumb and shall be looped around structural framing and connected to itself with 3/8-inch galvanized bolts and nuts. Hanger wire shall be saddle-tied to main runner channels and shall receive three full turns around itself. Hanger strap shall be looped under main runner channels to form stirrups and through-bolted to channels using 3/8-inch galvanized bolts and nuts. Main runner channels shall be located within 6 inches of parallel walls and shall be cut short of abutting walls 1/2 inch plus or minus 1/4 inch. Where channels are spliced, the ends shall be overlapped not less than 12 inches with flanges of channels interlocked and securely tied near each end of the splice with two loops of 16-gage tie wire. Splices shall be staggered.

(2) For Spans Up to and Including 4 Feet on Centers (Contractor's Option). At the option of the Contractor, a direct hung ceiling furring suspension system may be used and shall conform to the following: Furring runners and tees shall be 1-1/2-inch high double web .020 inch thick electro-galvanized steel with a 1-3/8-inch flange face. Wall track shall be standard track made of .020 inch thick electro-galvanized steel with one inch sides and a 1-5/8-inch inside diameter. Wall track shall be installed level around entire perimeter. Furring runners shall be

directly suspended and leveled on 48 inch centers by hanger wire spaced not more than 48 inches on center along the main runner. Runners shall be 12 feet long with reversible coupling ends for continuous splicing. Furring tees shall be spaced 16 inches on center along the main runners. Furring runner and tee ends shall be butt cut and fit into the wall track at all perimeters. Deflection of components shall not exceed 1/360 of the span. In any areas where fixtures or other accessories are placed in or on the grid components, hanger wires shall be suspended at each corner of the fixture or accessory to distribute the load evenly.

(3) For Spans Exceeding 4 Feet up to and Including 8 Feet on Centers. Ceilings suspended from structural frame by hanger wire or traps shall be attached to 1-1/2-inch steel main runner channels spaced in accordance with the following table.

Maximum center-to-center spacing of main runner channels	Maximum spacing of hangers on main runner channels
5 feet 0 inch	3 feet 6 inches
6 feet 9 inch	3 feet 0 inch
7 feet 0 inch	3 feet 0 inch
8 feet 0 inch	2 feet 6 inches

Hanger wire shall be hung plumb and looped around structural members and shall receive three full turns around itself. Hanger strap shall be hung plumb and shall be looped around structural framing and connected to itself with 3/8-inch galvanized bolts and nuts. Hanger wire shall be saddle-tied to main runner channels and shall receive three full turns around itself. Hanger strap shall be looped under main runner channels to form stirrups and through-bolted to channels using 3/8-inch galvanized bolts and nuts. Main runner channels shall be located within 6 inches of parallel walls and shall be cut short of abutting walls 1/2 inch plus or minus 1/4 inch. Where channels are spliced, the ends shall be overlapped not less than 12 inches with flanges of channels interlocked and securely tied near each end of the splice with 2 loops of 16-gage tie wire. Splices shall be staggered.

7.2 Attached Ceilings. Framing is not required for ceilings attached to structural members, except for framing openings as specified in Paragraph: FRAMED OPENINGS. Furring as hereinafter specified shall be attached directly to structural members.

8. FURRING. Hat-shaped steel channels or steel studs shall be provided where steel furring is indicated for screw attachment of gypsum wallboard.

8.1 Walls. Hat-shaped furring channels shall be spaced 16 inches on centers. Furring shall be secured to masonry or concrete with hardened nails, toggle bolts, expansion shields, or other approved method at not more than 24-inch centers staggered in alternate flanges of channel with one fastener located within 6 inches of each end. Furring shall be set plumb or level and rigid using shims of galvanized steel wherever necessary to assure a finished wall surface in a true, even plane. Wallboard abutting dissimilar wall or ceiling materials shall have edges finished with casing beads alined to provide a finished joint.

8.2 Ceilings.

(1) For Spans Up to and Including 4 Feet on Centers. Hat-shaped furring members shall be spaced 16 inches on centers and securely attached across suspended main runner channels with wire clips or double strand of 16-gage tie-wire saddle-tied at each crossing. Ends of wire ties shall receive three full twists. Furring shall be spliced with 8-inch nested laps securely tied near each end of lap with two loops of 16-gage tie wire. Splices shall be staggered. Furring channels shall be located within 2 inches of walls. Where wallboard abuts dissimilar wall materials, perimeter of ceilings shall be finished with an edge bead trim strip applied to wall and accurately alined with the finished ceiling. Wallboard edges adjoining walls shall be laid on the horizontal leg of the trim strip.

(2) For Spans Exceeding 4 Feet Up to and Including 8 Feet on Centers. Steel-stud furring members shall be spaced 16 inches on centers with webs set vertically and securely attached across suspended main runner channels with wire clips or double strand of 13-gage tie wire saddle-tied at each crossing. Ends of wire ties shall receive three full twists. A nail spacer shall be inserted vertically between the stud flanges at each crossing as each wire tie or clip is applied to assure constant flange spacing. Steel studs for furring shall be sized in accordance with the following table:

Maximum span center-to-center (Framing members) Minimum stud size	(main runner channels)
1-5/8 inches	5 feet 0 inch
2-1/2 inches	6 feet 0 inch
3-5/8 inches	8 feet 0 inch

Stud furring shall be spliced with 12-inch nested laps securely tied near each end of lap with two loops of 13-gage tie wire. Studs shaped to preclude nesting shall be spliced with a section of ceiling channel not less than 24 inches long tied to each stud end as required for the nested lap. Splices shall be staggered. Furring studs shall be located within 2

inches of walls. Where wallboard abuts dissimilar wall materials, perimeter of ceilings shall be finished with an edge bead trim strip applied to wall and accurately alined with the finished ceiling. Wallboard edges adjoining walls shall be laid on the horizontal leg of the trim strip.

9. STEEL FRAMING,OPTION. Steel framing using 3-5/8-inch studs may be used as a Contractor's option to wood framing for non-load-bearing partitions. Studs shall be spaced not more than 16 inches on center. Steel framing at openings shall be as hereinafter specified for framed openings.

10. STEEL FRAMING. Non-load-bearing walls and partitions shall be framed with 2-1/2-inch and 3-5/8-inch steel studs and runners installed as indicated and as hereinafter specified. Studs shall be spaced not more than 16 inches on centers and end studs in adjoining walls shall be interconnected with screws spaced at not more than 24-inch centers.

10.1 Floor and Ceiling Runners shall be accurately alined and securely attached to floors and to structural ceilings or roof deck except where partition ceiling runners are applied directly to finish material of continuous ceilings. Attachment shall be by expansion shields, machine bolts, or other approved method, at not more than 24-inch centers and to furred ceilings by wallboard screws at each furring member. Furring will be provided at ceiling runners oriented parallel to the direction of furring members. Runners shall extend beyond open-end partitions for 12 inches. Upon installation of end studs, runner extensions shall be bent and nested with the stud and attached thereto with two wallboard screws. Runners shall be in the longest possible lengths with butt joints between lengths.

10.2 Studs shall be positioned plumb in ceiling and floor runners and securely attached thereto with not less than one wallboard screw on each side of stud ends. Studs shall be installed in continuous lengths with no splicing in lengths up to 16 feet for 3-5/8-inch studs and 12 feet for 2-1/2-inch studs.

10.3 Special Framing for beams, columns, soffits, and other special items shall be sized (similar to optional wood members) and shall be built to the shapes or forms indicated by rigidly securing each intersection with wallboard screws.

11. FRAMED OPENINGS.

11.1 Ceiling Openings. Support members shall be provided at ceiling openings such as required for access panels, recessed light fixtures, and for air supply or exhaust. Support members of not less than 1-1/2-inch main runner channels and suspension wires or straps shall be located to provide at least the minimum support specified herein for furring and wallboard attachment. Intermediate structural members, although not a part of the structural system, shall be provided for attachment or suspension of support members.

11.2 Wall Openings. Frames shall be provided for wall openings such as required for doors, pass-through openings, and access panels. Steel frames are specified in sections: STEEL DOORS AND FRAMES or MISCELLANEOUS METAL and wood frames are specified in section: FINISH CARPENTRY. Steel frames shall be securely attached through built-in anchors to the nearest stud on each side of the opening with wallboard screws or double strands of tie wire. Wood frames or bucks shall be securely attached to the nearest studs with wallboard screws. A ceiling runner channel section cut 24 inches longer than the rough-opening width shall be installed horizontally over the framed opening. Runner ends shall be bent, nested, and attached as specified for open-end partitions. Partitions abutting continuous suspended ceilings shall be strengthened for rigidity at rough openings, such as door openings, of more than 30 inches wide with angle bracing from each jamb location anchored to the structural ceiling or deck supports. Cross bracing between partitions or similar bracing may be substituted for angle bracing as approved.

12. APPLICATION. Wallboard shall be applied with the separate boards in moderate contact but not forced into place. At internal and external corners the cut edges of the boards shall be concealed by the overlapping covered edges of the abutting boards. The boards shall be so staggered that the corners of any four boards will not meet at a common point except in vertical corners.

12.1 Ceilings. Wallboard shall be applied to the ceilings with the long dimension of the wallboard at right angles to the furring members. Wallboard may be applied with the long dimension parallel to furring members that are spaced 16 inches on centers when attachment members are provided at end joints. At exterior soffits install aluminum H mold at all panel joints per manufacturer's instructions.

12.2 Walls.

(1) Single-Ply Horizontal Application. The long dimension of the panels shall be placed at right angles to the furring or framing members. End joints, where required, shall be made over furring or framing members. The panels shall be of the length required to reach from the ceiling line to the floor line in one continuous length when applied over horizontal furring.

(2) Single-Ply Vertical Application. The long dimension of the panels shall be placed parallel to the furring or framing members. The panels shall be of the length required to reach from the ceiling line to the floor line in one continuous length. Joints shall be made over framing or furring members.

12.3 Control Joints shall be formed of casing bead trim installed back-to-back over separate framing or furring members. A spacing of 3/16 inch shall be maintained between opposite beads. Control joints shall be located as indicated.

13. ATTACHMENT.

13.1 General. Except as specified herein, fastening shall conform to American National Standard A9.1. If the paper surface is broken in nailing, another nail shall be driven approximately 2 inches from the faulty nailing. Attachment of wallboard to steel furring and steel framing shall be by screw fasteners only. Nailing or screw attachment shall proceed from central portion of wallboard toward ends and edges.

13.2 Standard Nailing Method. Nailing shall be spaced 7 inches on centers along nailing members on ceilings and 8 inches on centers along nailing members on walls.

13.3 Screw Method shall be used for wallboard attachment to steel furring and to steel framing. Screws shall be driven with clutch-controlled power screwdrivers and spaced 12 inches on centers on ceilings and 16 inches on centers on walls, except that where framing members are spaced 24 inches apart on walls, screw spacing shall be 12 inches on centers. Screw attachment may be used in lieu of nailing.

14. JOINT AND FASTENER CONCEALMENT.

14.1 General. Areas to be treated shall be inspected to ascertain that wallboard fits tightly against supporting framework, and these areas shall be heated to not less than 55 degrees F. for 24 hours prior to commencing treatment, during treatment, and until adhesive compounds have dried. Application shall be by machine or hand tool. A minimum drying time of 24 hours shall be allowed between adhesive coats. Additional drying time may be necessary in poorly ventilated areas.

14.2 Embedding Compound shall be applied to wallboard joints and fastener heads in a thin uniform layer. Compound shall be spread not less than 3 inches wide at joints, and reinforcing tape shall be centered on the joint and embedded in the compound. A thin layer of compound shall then be spread over the tape. After this treatment has dried, a second coat of embedding compound shall be applied to wallboard joints and fastener heads. Compound shall be spread in a thin uniform coat and to not less than 6 inches wide at joints. Treated areas shall be sanded to eliminate ridges and high points.

14.3 Finishing Compound. After embedding compound has dried, a coat of finishing compound shall be applied to joints and fastener heads. Finishing compound applied at joints shall be feathered out to not less than 12 inches wide. After compound has dried, the treated areas shall be sanded as necessary to obtain uniformly smooth surfaces. Care shall be taken not to scuff the paper surface of the wallboard.

15. CORNER TREATMENT.

15.1 Internal Corners shall be treated in the manner specified hereinbefore for joints, except that the reinforcing tape shall be folded lengthwise through the middle and fitted neatly into the corner.

15.2 External corners shall have a corner bead fitted neatly over the corner and secured with the same type fasteners used for applying wallboard. The fastener shall be spaced approximately 6 inches on centers and driven through the wallboard into the framing member. After the corner piece has been secured in place, the corner shall be treated with joint compound in the manner hereinbefore specified for joints. The joint compound shall be feathered out from 8 to 10 inches on each side of corner.

* * * * *

SECTION 14H

ACOUSTICAL TREATMENT

Index

1. Applicable Publications
2. General
3. Certificates
4. Environmental Conditions
5. Samples
6. Shop Drawings
7. Materials
8. Ceiling Suspension System
9. Installation of Ceiling Suspension System
10. Cleaning

1. APPLICABLE PUBLICATIONS. The following publications of the issues listed below, but referenced hereafter by basic designation only, form a part of this specification to the extent indicated by the references thereto.

1.1 Federal Specification.

SS-S-118A & Am-3	Sound-Controlling Blocks and Boards (Acoustical Tiles and Panels, Prefabricated)

1.2 American Society for Testing and Materials (ASTM), Publications.

ASTM E 90-75	Laboratory Measurement of Airborne Sound Transmission Loss of Building Partitions
ASTM E 119-73	Fire Tests of Building Construction and Materials
ASTM E 413-73	Determination of Sound Transmission Class
ASTM C 635-69 (R 1975)	Metal Suspension Systems for Acoustical Tile and Lay-In Panel Ceilings
ASTM C 636-69 (R 1975)	Installation of Metal Ceiling Suspension Systems for Acoustical Tile and Lay-In Panels

1.3 American Board Products Association (ABPA) Publication.

AMA-I-II-1967	Ceiling Sound Transmission Test by Two-Room Method

1.4 Underwriters' Laboratories, Inc. (UL) Publication.

Fire Resistance Index (January 1976)

2. GENERAL.

2.1 Location and extent of acoustic treatment shall be as shown on drawings.

2.2 All interior finish work such as plastering and concrete work shall be complete and dry before installation. All mechanical, electrical, and other work above the ceiling line shall be completed and approved prior to the start of acoustical ceiling installation.

2.3 Materials shall be carefully handled and stored under cover in dry, watertight enclosures. Immediately before installation, acoustical units shall be stored for not less than 24 hours at the same temperature and relative humidity as the space where they will be installed.

3. CERTIFICATES. Before delivery of acoustical system components, test reports by an independent testing laboratory, attesting that acoustical ceiling systems meet specified requirements shall be submitted in accordance with the SPECIAL PROVISIONS. Data attesting to conformance of the proposed system(s) to Underwriters' Laboratories Inc., requirements for the fire endurance rating(s) listed in UL Fire Resistance Index may be submitted for approval in lieu of test reports.

4. ENVIRONMENTAL CONDITIONS. A uniform temperature of not less than 60 degrees F. nor more than 80 degrees F. and a relative humidity of not more than 75 percent shall be maintained continuously before, during, and after installation of acoustical units.

5. SAMPLES. Samples shall be representative of the materials to be supplied and those upon which the specified tests have been made. The following samples shall be submitted in accordance with the SPECIAL PROVISIONS, and approved prior to delivery of acoustical-system components to the project site.

One of each type of acoustical unit proposed for use showing the specified texture, finish, and color of the exposed-to-view surfaces.

One of each fastening device, including anchors.

One linear foot of runner and furring members, intermediate support member if required, hanger wire or strap, and edge molding.

6. SHOP DRAWINGS. Shop drawings shall be submitted for approval in accordance with the SPECIAL PROVISIONS and shall clearly delineate all components of the system. A reflected ceiling plan of typical rooms and other spaces, which includes locations of electrical and mechanical features, shall be provided.

7. MATERIALS. Acoustical units shall be delivered to the site in the manufacturer's original unopened containers with brand name and type clearly marked.

7.1 Acoustical Units. Acoustical units shall conform to SS-S-118, class 25, and the following requirements.

7.1.1 Tile for Concealed-Grid System:

Type III
NRC grade: 55 minimum when tested on mounting No. 7, SS-S-118.
Pattern d.
Nominal size: 12 by 12 inches, 3/4" thick.
Edge detail: square.
Joint detail: kerfed and rabbeted.
Finish: Factory-applied white finish.
LR grade: 1.
STC range 35-39.

7.2 Suspension System. Suspension system shall be concealed-grid and shall conform to ASTM C 635 for intermediate-duty systems.

8. CEILING SUSPENSION SYSTEM. Suspension system shall be completely compatible with the acoustical units. Surfaces exposed to view shall be of uniform width and shall be aluminum or steel with a factory applied white baked enamel.

8.1 Deleted.

8.2 Edge or Wall Molding. Edge or wall molding shall be aluminum or steel with a factory applied white baked enamel finish. Wall molding shall have a flange of not less than 15/16 inch and shall be provided with inside and outside corner caps.

8.3 Hangers. Hangers shall be galvanized steel wire. Hangers and attachment shall support a 300 pound vertical load without failure of supporting material or attachment.

9. INSTALLATION OF CEILING SUSPENSION SYSTEM. Acoustical work shall be provided complete with all necessary fastenings, clips, and other accessories required for a complete installation. Mechanical fastenings shall not be exposed in the finished work. Hangers shall be laid out for each individual room or space. Hangers, shall be placed to support framing around beams, ducts, columns, grilles, and other penetrations through ceilings. Main runners and carrying channels shall be kept clear of abutting walls and partitions. At least 2 main runners shall be provided for each ceiling span.

9.1 Condition of Surfaces. Prior to starting work, spaces and surfaces to receive acoustical treatment shall be examined for conditions that will prevent a satisfactory installation. Such conditions shall be corrected before the acoustical work proceeds. All mechanical, electrical and other work above the ceiling line shall be completed and approved prior to start of acoustical ceiling installation.

9.2 Suspension System. Installation of suspension system shall meet the requirements of sections 1 and 2 of ASTM C 636 and the requirements specified herein.

9.3 Wall molding shall be provided where ceilings abut vertical surfaces. Wall molding shall be secured not more than 3 inches from ends of each length and not more than 16 inches on centers between end fastenings. Wall molding springs shall be provided at each tile in concealed system.

9.4 Ceiling Tiles. Ceiling tiles shall be installed in accordance with the acoustical unit manufacturer's printed instructions. Edges of ceiling tiles shall be in close contact with metal supports, with each other, and in true alinement. Unit shall be arranged so that units less than 1/2 width are minimized.

10. CLEANING. Following installation, dirty or discolored surfaces of acoustical units shall be cleaned and left free from defects. Units that are damaged or improperly installed shall be removed and new units provided as directed.

* * * * *

SECTION 14I

CALKING AND SEALANTS

Index

1. Applicable Publications
2. Samples
3. Environmental Conditions
4. Delivery and Storage
5. Requirements for Calking and Sealants
6. Primer
7. Backup Material
8. Bond Preventive Materials
9. Masking Tape
10. Surface Preparation
11. Application
12. Cleaning

1. APPLICABLE PUBLICATIONS. The following publications of the issues listed below, but referred to thereafter by basic designation only, form a part of this specification to the extent indicated by references thereto.

1.1 Federal Specifications.

HH-P-117	Packing; Jute, Twisted
QQ-A-1876	Aluminum Foil
TT-C-00598C (COM-NBS) & Am-1	Calking Compound, Oil and Resin Base Type (for Building Construction)
TT-S-00227E (COM-NBS) & Am-3	Sealing Compound, Elastomeric Type, Multi-Component (for Calking, Sealing, and Glazing in Buildings and Other Structures)
TT-S-0023C (COM-NBS) & Am-2	Sealing Compound, Elastomeric Type, Single Component (for Calking, Sealing, and Glazing in Buildings and Other Structures)
TT-S-001543A (COM-NBS)	Sealing Compound, Silicone Rubber Base (for Calking, Sealing, and Glazing in Buildings and Other Structures)
TT-S-001657 (COM-NBS)	Sealing Compound, Single-Component, Butyl Rubber Based, Solvent Release Type (for Buildings and Other Types of Construction)
UU-P-270F & Am-1 & Am-2	Paper, Wrapping, Waxed (Dry)
PPP-T-42C	Tape, Packaging, Masking, Paper

1.3 American Society for Testing and Materials (ASTM) Specification.

D217-68(R 1973)	Cone Penetration of Lubricating Grease

2. SAMPLES.

2.1 Materials. Prior to delivery of the calking and sealants to the jobsite, a one-cartridge or equivalent representative sample of each calking and sealant specified herein shall be furnished. The sample shall be accompanied by certified laboratory test reports showing that the calking and sealants to be furnished have been tested within the last 12 months and meet the requirements of the applicable specifications. The sample containers shall include the same information on the label as specified herein for containers delivered to the job.

2.2 Joints. Before work is started, a sample of each type of joint shall be calked or sealed where directed. The samples shall show the materials, workmanship, bond, and color of materials as specified or selected for the work. The materials, workmanship, bond, and color throughout the project shall match that of the approved sample joint.

3. ENVIRONMENTAL CONDITIONS. The ambient temperature shall be within the limits of 40 and 90 degrees F when the calking and sealants are applied.

4. DELIVERY AND STORAGE. Materials shall be delivered to the job in the manufacturers' original unopened containers. The containers shall include the following information on the label: supplier, name of material, formula or specification number, lot number, color, date of manufacture, mixing instructions, shelf life, and curing time when applicable at the standard conditions for laboratory tests. All materials shall be carefully handled and stored to prevent inclusion or foreign materials, or exposure to temperatures exceeding 90 degrees F. Calking compound or components outdated as indicated by shelf life shall not be used.

5. REQUIREMENTS FOR CALKING AND SEALANTS.

5.1 General. Calking or sealant shall be provided in joints as indicated or specified. Materials shall conform to the respective specifications and other requirements specified. The work specified herein shall be performed by workmen skilled in such work.

5.2 Sealant Formulation.

5.2.1 Intended Application. Each container brought to the jobsite with a different sealant formulation shall be marked for the intended use. For each intended use, the color shall be one of the manufacturer's standard colors as specified. The sealant formulation shall conform to the requirements specified herein.

5.2.2 Components of each formula shall be used only with that formula. Intermixing of components of different formulas will not be permitted. Thinners or other additives shall not be used to modify the formula.

5.2.3 Mixing shall be in accordance with instructions provided by the manufacturer of the sealants. Mixing equipment shall be thoroughly cleaned before mixing each batch. For multi-component sealants, the entire portion of the accelerator or smaller unit shall be added to the entire portion of the compound or large unit. The container shall have sufficient space at the top to allow for addition of the accelerator and for mixing.

5.3 No. 4 Sealant curing type, shall be a one-component, elastomeric-type compound conforming to TT-S-230, type II, class B or TT-S-1543, class B. The compound shall be supplied in a ready-to-use form which requires no on-the-job mixing.

6. PRIMER. Primer for No. 4 sealant shall be as recommended by the sealant manufacturer. Primer shall have been tested for durability with the sealant to be used and on samples of the surfaces to be sealed.

7. BACKUP MATERIAL. Backup material shall be resilient urethane or polyvinyl-chloride foam, closed-cell polyethylene foam, closed-cell sponge of vinyl or rubber, polychloroprene tubes or beads, polisobutylene extrusions, oilless dry jute, or rope yarn. Backup material shall be nonabsorbent, nonstaining, and compatible with the sealant used. Tube or rod stock when used shall be rolled into the joint cavity. Preformed support strips for ceramic tile control-joint and expansion-joint work shall be polyisobutylene or polychloroprene rubber. Rope yarn shall conform to HH-P-117, type I.

8. BOND PREVENTIVE MATERIALS. Bond-preventive materials shall be one of the following, as recommended by the sealant manufacturer.

8.1 Polyethylene Tape, Pressure-Sensitive Adhesive. The adhesive is required only to hold tape to the construction materials as indicated.

8.2 Aluminum Foil. Aluminum foil shall conform to Fed. Spec. QQ-A-1876.

8.3 Wax Paper. Wax paper shall conform to UU-P-270.

9. MASKING TAPE. Masking tape shall conform to PPP-T-42.

10. SURFACE PREPARATION. The joint design, shape, and spacing shall be as indicated. The surfaces of joints to be sealed shall be dry. Oil, grease, dirt, chalk, particles of mortar, dust, loose rust, loose mill scale, and other foreign substances shall be removed from all joints surfaces to be sealed. Oil or grease shall be removed with solvent and surfaces shall be wiped with clean cloths.

10.1 Concrete and Masonry Surfaces. Where surfaces have been treated with curing compounds, oil, or other such materials they shall be removed by sandblasting or wire brushing. Laitance, efflorescence and loose mortar shall be removed from the joint cavity.

10.2 Steel surfaces to be in contact with sealant shall be sandblasted or, if sandblasting would not be practical or would damage adjacent finish work, the metal shall be scraped and wire brushed to remove loose mill scale. Protective coatings on steel surfaces shall be removed by sandblasting or by a solvent that leaves no residue.

10.3 Aluminum surfaces of windows and door frames in contact with sealants shall be cleaned of temporary protective coatings. When masking tape is used for a protective cover, the tape and any residual adhesive shall be removed just prior to applying the sealant. Solvents used to remove protective coatings shall be as recommended by the manufacturer of the aluminum work and shall be nonstaining.

11. APPLICATION.

11.1 Paper Masking Tape shall be placed on the finish surface on one or both sides of a joint cavity to protect adjacent finish urfaces from primer or compound smears. Masking tape shall be removed within 10 minutes after joint has been filled and tooled.

11.2 Bond-preventive materials for No. 4 sealant shall be installed on the bottom of the joint cavity and other surfaces indicated to prevent the sealant from adhering to the surfaces covered by the bond-preventive materials. The materials shall be carefully applied to avoid contamination of adjoining surfaces or breaking bond with surfaces other than those covered by the bond-preventive materials. At the option of the Contractor, backstop material with bond-breaking characteristics may be installed in lieu of bond-preventive materials specified.

11.3 Backstops. The back or bottom of joints constructed deeper than indicated shall be packed tightly with backstop material to provide a joint of the depth indicated.

11.4 Primer shall be used on concrete masonry units, wood, or other porous surfaces in accordance with instructions furnished with the sealant. Primer shall be applied to the joint surfaces to be sealed. Surfaces adjacent to joints shall not receive primer. 6.5.2.1 General. At the shore ends of submerged dredging pipelines and powerlines, 11.5 No. 4 Sealant. Compound shall be gun-applied with a nozzle of proper size to fit the width of joint indicated and shall be forced into grooves with sufficient pressure to expel air and fill the groove solidly. Sealant shall be uniformly smooth and free of wrinkles. Joints shall be tooled slightly concave after sealant is installed. When tooling white or light-color sealant, dry or water-wet tool shall be used. source any pay all connection fees. Electricity used for lighting signs shall be 12. CLEANING. The surfaces adjoining the calked and sealed joints shall be cleaned of smears and other soiling resulting from the calking and sealing application as work progresses.

* * * * *

SECTION 14J

GLASS AND GLAZING

Index

1. Applicable Publications
2. Submittals
3. Delivery & Storage
4. Materials
5. Installation

1. APPLICABLE PUBLICATIONS. The following publications of the issues listed below, but referred to thereafter by basic designation only, form a part of this specification to the extent indicated by references thereto.

1.1 Federal Specifications.

DD-G-451C & Int. Am 4	Glass, Plate, Sheet Figured, (Float, Flat, for Glazing, Corrugated, Mirrors and Other Uses).
DD-G-1403B & Am 1	Glass, Plate (Float), Sheet, Figured, & Spandrel (Heat Strengthened & Fully Tempered)
TT-G-410E & Am 1	Glazing Compound, Sash (Metal) for Back Bedding and Face Glazing (Not for Channel or Stop Glazing)

1.2 Commercial Standard.

CS230-60	Vinyl Plastic Weatherstrip

1.3 American National Standards Institute, Inc. (ANSI) Publication.

Z97-1-1975	Safety Performance Specifications, and Methods of Test for Safety Glazing Material Used in Buildings

1.4 Flat Glass Marketing Association (FGMA) Publication.

Glazing Manual (1974 Edition)

2. SUBMITTALS.

2.1 Guarantees. Insulating glass units shall be guaranteed not to develop material obstruction to vision as a result of dust or film formation on the inner glass surfaces caused by failure of the hermetic seal, other than through glass breakage, within a 10-year period following installation.

2.2 Manufacturer's Installation Instructions. Submit in duplicate manufacturer's printed installation instructions for each of the following for approval before work is started:

(1) Tempered Glass
(2) Insulating Glass Unit
(3) Glass-setting Materials

2.3 Certificates of Conformance or Compliance. Unless specified otherwise, before delivery of materials, submit in triplicate notarized certificates from the manufacturer certifying that materials conform to requirements specified herein. Labels or marking affixed to manufacturers' products, attesting that identical products have successfully passed requirements specified herein will be accepted in lieu of certificates.

3. DELIVERY AND STORAGE. Putty and glazing compounds shall be delivered to the site in unopened containers, labeled plainly with the manufacturers' names and brands. Glass and setting materials shall be stored in safe, dry locations and shall not be unpacked until needed for installation. Handling and installation of materials shall be in a manner that will protect them from damage.

4. MATERIALS

4.1 Glass. Glass shall be provided in locations indicated or specified and shall conform to the requirements of specification DD-G-451, unless specified otherwise. Glass for doors shall be not less than 1/4-inch thick for full-glazed stile-and rail doors.

4.1.1 Glass, Mirrors Larger Than 18 by 30 Inches. Glass shall be type I, class 1, quality q^2 1/4 inch thick, and may be type II, class 1, quality q^7 3/16-inch thick for sizes less than 10 square feet. One surface of the glass shall have silver coating and copper backing passing the test requirements of Federal Specification DD-M-411. Two coats of clear varnish shall be applied over the copper backing and edges of the mirror. Frames are specified in section: MISCELLANEOUS METAL.

4.1.2 Insulating Glass Units. Formed of one piece of type I, class 1, quality q^3 1/4-inch-thick glass, and one piece of type I, class 2, style B, 1/4 inch thick glass (bronze) separated by a 1/2-inch dehydrated air space, hermetically sealed. Bronze light shall be on exterior.

4.1.3 Tempered Glass. Specification DD-G-1403, kind FT, condition A, type I, class 2 style B (bronze), 1/4-inch thick and shall be provided for all glazed doors.

4.2 Setting Materials.

4.2.1 Glazing Compound and Preformed Glazing Sealants. Suitable type approved for the application and in accordance with the section entitled Glazing Materials of the FGMA Glazing Manual, unless specified otherwise. The use of nonskinning compound, nonresilient-type preformed sealers and preformed impregnated-type gaskets will not be permitted. Metal sash putty will not be premitted, but compound conforming to specification TT-G-410 will be permitted. When flexible vinyl gasket channels are used, the material shall conform to Commercial Standard CS230. Materials used with aluminum frames shall be aluminum colored, nonstaining, and not require painting. Other materials which will be exposed to view and unpainted shall be gray or neutral color.

4.2.2 Glazing Accessories. As required to supplement the accessories provided with the items to be glazed and to provide a complete installation, including glazing points, clips, shims, angles, beads, setting blocks, and spacer strips. Ferrous metal accessories which will be exposed in the finished work shall have a finish that will not corrode or stain while in service.

5. INSTALLATION

5.1 General. The sizes to provide the required edge clearances shall be determined by measuring the actual opening to receive the glass. All edges of glass that will be exposed in finish work shall be ground smooth. Labels shall be left in place until the installation is approved. Movable items shall be securely fixed, or in a closed and locked position until glazing compound has thoroughly set.

5.2 Glass Setting. Items to be glazed may be shop or field glazed using glass of the quality and thickness specified or indicated. Preparation of surrounds and glazing, unless otherwise specified or approved, shall be in conformance with the details and general conditions governing glazing in the FGMA Glazing Manual. Aluminum windows, may be glazed in conformance with one of the glazing methods described in the standards under which they are produced. Glass for which the manufacturer's printed installation instructions are submitted and approved as specified shall be handled and installed in accordance with the manufacturer's instructions. Beads or stops which are furnished with the items to be glazed shall be used to secure the glass in place.

5.2.1 Insulating Units. Units shall be installed in accordance with the manufacturer's recommendations; shall not have edges or corners ground, nipped, cut, or fitted after leaving the factory; shall not be subject to springing, forcing, or twisting during setting; and shall be handled so as not to strike setting frames or other objects. Install with bronze light to the exterior.

5.3 Cleaning. Glass surfaces shall be thoroughly cleaned with labels, paint spots, putty, and other defacement removed, and shall be clean at the time the work is accepted.

* * * * *

SECTION 14K

TILE; CERAMIC

Index

1. Applicable Publications
2. Materials
3. General
4. Samples
5. Certificates
6. Installation of Wall Tile
7. Installation of Floor Tile
8. Control Joints
9. Cleaning and Protecting

1. APPLICABLE PUBLICATIONS. The following publications of the issues listed below, but referred to thereafter by basic designation only, form a part of this specification to the extent indicated by the references thereto.

1.1 Federal Specifications.

QQ-L-101C	Lath, Metal, (and Other Metal Plaster Bases)
SS-A-281b & Am-1	Aggregate; (For) Portland-Cement-Concrete

1.2 American National Standards Institute, Inc. (ANSI) Standards.

A108.7-1967	Electrically Conductive Ceramic Tile Installed with Conductive Dry-Set Portland Cement Mortar
A118.1-1967(R 1972)	Dry-Set Portland Cement Mortar
A118.2-1967(R 1972)	Conductive Dry-Set Portland Cement Mortar
A118.3-1969	Chemical-Resistant, Water Cleanable Tile-Setting Epoxy

1.3 American Society for Testing and Materials (ASTM) Specifications.

C 144-70(R 1975)	Aggregate for Masonry Mortar
C 150-74	Portland Cement
C 206-49(R 1974)	Special Finishing Hydrated Lime
C 207-74	Hydrated Lime for Masonry Purposes
C 279-54(R 1972)	Chemical-Resistant Masonry Units
C 306-60	Compressive Strength of Chemical-Resistant Resin Mortars
C 307-61(R 1971)	Tensile Strength of Chemical-Resistant Resin Mortars
C321-64(R 1971)	Bond Strength of Chemical-Resistant Mortars

1.4 National Fire Protection Association (NFPA) Standard.

No. 56A-1973	Use of Inhalation Anesthetics (Flammable and Nonflammable)

1.5 Tile Council of America, Inc. (TCA) Standard.

TCA 137.1-1976	Recommended Standard Specifications for Ceramic Tile

2. MATERIALS.

2.1 Aggregate for Concrete Fills shall conform to Federal Specification SS-A-281. Maximum size of coarse aggregate shall be not greater than one-half the thickness of concrete fill.

2.2 Lime shall conform to ASTM Specifications C 206 or C 207, type S.

2.3 Metal Lath shall conform to Federal Specification QQ-L-101, type II, class 3, 3.4 pounds per square yard.

2.4 Portland Cement shall conform to ASTM Specification C 150, type I, color as hereinafter specified.

2.5 Expansion-Joint Filler Strip shall be either sponge neoprene or sponge butyl rubber.

2.6 Dry-Set Mortar shall conform to American National Standard A118.1.

2.7 Reinforcement in Concrete Fills and Setting Beds shall be 1-1/2- or 2-inch-mesh wire netting of not lighter than 16-gage wire.

2.8 Sand for Setting Beds shall conform to ASTM Specification C 144. Sand for grout and dry-set mortar shall conform to ASTM Specification C 144, except that 100 percent shall pass the No. 16 sieve size.

2.9 Tile shall conform to TCA Standard 137.1 and shall be standard grade. Containers shall be grade-sealed, and seals shall be marked to correspond with the marks on the signed "master grade certificate" specified hereinafter. Sizes specified are nominal.

2.9.1 Ceramic-Mosaic Tile shall be unglazed porcelain with cushion edges.

2.9.2 Glazed Wall Tile shall be matte glaze 4-1/4 by 4-1/4 inch.

2.9.3 Trim Units shall be type, size, and shape as required.

3. GENERAL. Tile in colors and patterns indicated, shall be applied in the areas shown on the drawings. Work shall not be performed unless the area's ambient temperature is at least 50 degrees F. and rising. Manufacturer's original containers shall be delivered to the project site unopened, with seals unbroken and labels and hallmarks intact. Floor tile installation shall not be started in spaces requiring wall tile until after the wall tile has been installed. Surfaces to receive applications of materials shall be clean and free of dirt, dust, oil, grease, and other objectionable matter. Tile shall be installed with the respective surfaces in true even planes to the elevations and grades shown. Each tile shall be brought to true and level plane by use of a beating block, and a test of plane distortion shall be made with a straightedge. Positive beat-in of each tile is required to establish proper bond. Tiles that are out of true plane or misplaced shall be removed and reset. Tile shall be laid from the centerlines of each space outward and adjustments made along walls, partitions, and borders, if any, so as to symmetrize the pattern with no cuts less than one-half the tile width. Joints between tiles shall be of uniform width as specified for the tile installed and parallel over the entire area. Fractional changes in dimensions without varying the uniformity of joint width will be permitted. Tile shall be cut with a suitable cutting tool and rough edges shall be smoothed. Cut-tile misfits shall be replaced with properly cut tile. Installation of tile shall be deferred until hangers, door bucks, and electrical and mechanical work that is to be in or behind tile have been installed and satisfactory protection of adjoining work has been provided. Stops, returns, trimmers, caps, and special shapes shall be provided as required for sills, jambs, recesses, offsets, external corners, and other conditions to provide a complete and neatly finished installation. Tile bases or cove shall be solidly backed with mortar.

4. SAMPLES. The following samples of materials proposed for use shall be submitted to the Contracting Officer for approval before materials represented by the samples are delivered to the project site.

a. Floor Tile. Duplicate sheets of tile, each about 12 inches square, showing colors and patterns of each type, class, and form.

b. Wall Tile. Duplicate panels of 4 tiles each, showing range in shades of each color.

c. Trimmers. Duplicate pieces of each color and shape

5. CERTIFICATES. The Contractor shall furnish certificates prior to delivery of the certified material to the project site. Each certificate shall be signed by the Contractor and an authorized officer of the manufacturing company, and shall bear the name and address of the Contractor, the project location, the quantity, and date or dates of the applicable shipment or delivery. Certificates in triplicate will be required for the following materials.

a. All Tile. A "master grade certificate" certifying conformance to specification requirements.

6. INSTALLATION OF WALL TILE.

6.1 Metal Lath. Before scratch coat is installed, wood stud and wood furring shall be covered with 4-mil polyethylene film and metal lath. Lath shall be applied with the longer dimension horizontal. End laps shall be not less than 2 inches and shall occur over supports only. Side laps shall be not less than 2 inches wide and shall be tied with not lighter than 18-gage annealed zinc-coated wire at intervals of not over 6 inches. Metal lath shall be secured at 6 inches on centers along all supports. Ends of wire ties shall receive three full twists and be bent into the plane of the lath.

6.2 Scratch Coats for application as foundation coats shall be not less than 1/4 inch thick and shall be composed by volume of one part portland cement to 4 parts dry sand or 5 parts damp sand to 1/2 part hydrated lime, and mixed with the minimum amount of water necessary to produce a workable mass. Mortar for scratch coats shall be used within one hour after mixing. Retempering will not be permitted. Scratch coats shall be applied in sufficient quantity and with sufficient pressure to cover the entire area and form good keys, shall be deeply scored or scratched and cross-scratched. Scratch coats shall be kept moist, and an interval of at least 24 hours shall be provided between application of scratch coats and application of mortar bed.

6.3 Mortar Bed shall be composed by volume of one part portland cement to 1/2 part hydrated lime to 5 parts damp sand, and mixed with the minimum amount of water necessary to produce a workable mass. Mortar bed shall be applied in sufficient quantity and with sufficient pressure to cover well the entire area and form a good key, shall be brought out flush with temporary screeds or guide strips so placed as to give a true even surface at the proper distance from the finished face of tile, and shall have a finish suitable for reception of material used in setting tile.

6.4 Setting Tile. Joints shall be straight, level, perpendicular, and of even width not exceeding 1/16 inch. Wainscots shall be built of full courses, that may extend to a greater height but in no case lower than the height shown. Vertical joints shall be maintained plumb for the entire height of the tile work. Damaged or defective tile shall be replaced. Tile over mortar bed shall be installed by one of the following methods selected by the Contractor.

a. Portland Cement Mortar Method. Before setting, tile shall be thoroughly soaked in clean water and drained so that no free moisture remains on the back of tile. While the mortar bed is still plastic, tile shall be set by troweling a skim coat of neat portland cement on the mortar bed or by applying a skim coat to the back of each tile unit and immediately floating the tile into place.

b. Dry-Set Mortar Method. Tile shall not be soaked. A 3/32 to 1/8-inch-thick layer of dry-set mortar shall be spread on the cured mortar bed or other surface not more than 30 minutes before covering with tile; and the dry-set mortar shall be combed with a notched trowel of type recommended by mortar manufacturer not more than 10 minutes before the tile is set. Tile shall not be applied to skinned over mortar. Beat in and level the tile as specified in paragraph GENERAL. Joints shall be uniform and constructed according to the requirements specified in paragraph Setting Tile.

6.5 Grouting. Tile set by the portland cement mortar method shall have the edges wetted and shall be grouted full with a plastic mix of neat, white portland cement immediately after a suitable area of tile has been set. Tile set in dry-set mortar shall be grouted with a white dry-tile grout mixed and applied in strict accordance with the grout manufacturer's instructions. The joints shall be tooled slightly concave, and the excess mortar shall be cut off and wiped from the face of the tile. Interstices or depressions, left in the mortar joints after the grout has been cleaned from the surface, shall be roughened at once and filled to the spring line of the cushion edge before the mortar begins to harden.

7. INSTALLATION OF FLOOR TILE.

7.1 Reinforced Concrete Fill shall be provided under the setting bed where the distance between the under-floor surface and the finished tile-floor surface is 2 inches or greater, and shall be of such thickness that the mortar setting bed to be placed over the concrete fill shall be not less than 3/4 inch nor more than 1-1/4 inches thick at any point. Shower pans are specified in section: PLUMBING, GENERAL PURPOSE. Waterproofing under concrete fill shall conform to the requirements of section: BITUMINOUS WATERPROOFING. Where waterproof underlayment does not occur, structural slab shall be saturated with water, but no free water shall be allowed to remain on the slab surface immediately prior to installation of fill thereon. Concrete fill shall be composed by volume of one part portland cement to 3 parts fine aggregate to 4 parts coarse aggregate, and mixed with water to as dry a consistency as practicable. The fill shall be spread, tamped, and screeded to a true plane, and pitched to drains or leveled as shown. Concrete fill shall be thoroughly damp-cured before application of setting-bed material thereon. Concrete fill shall be reinforced with one layer of reinforcement, with the uncut edges lapped the width of one mesh and the cut ends and edges lapped not less than 2 inches. Laps shall be tied together with 18-gage wire every 10 inches along the finished edges and every 6 inches along the cut ends and edges. The reinforcement shall be supported and secured in the centers of concrete fills. The mesh shall be continuous; except where expansion joints occur, mesh shall be cut and discontinued across such joints.

7.2 Mortar Beds shall be composed by volume of one part portland cement to 6 parts damp sand, and up to 1/10-part hydrated lime. When mixed with water, the mortar shall be of such consistency and workability that will allow maximum compaction during tamping of the mortar bed. Area of mortar bed, spread at one time shall be only as large as can be covered with tile before the mortar has obtained its initial set. Surplus mortar shall be removed. Mortar beds shall be spread and tamped to force out air pockets, screeded to a true plane, and sloped to drains or

leveled as shown. The average thickness of mortar bed in any room or space shall be 1-1/4 inches but in no case shall the setting beds be less than 3/4 inch or more than 1-1/2 inches thick. Setting bed shall be reinforced as previously specified for concrete fill over waterproofing membrane or wood floor. Setting beds shall be bonded over concrete slabs or fill with a slurry of neat cement, reinforcement will not be required.

7.3 Ceramic-Mosaic Tile. The sheets of ceramic-mosaic floor tile shall be laid with joints the same as the joints between the tiles on the sheets. As soon as the setting bed has set sufficiently to be worked upon, either a dust coat of dry portland cement 1/32 to 1/16 inches thick shall be sprinkled over the surface and lightly worked with a steel trowel, or a 1/32 to 1/16 inch thick bond coat of neat portland cement grout shall be troweled over the still plastic mortar or applied to the backs of tiles immeidately before each sheet is laid. Tile sheets shall be laid on the freshly prepared setting bed while the surface is still plastic and then tamped into the mortar to insure solid bedding to the exact slope or level of finished-floor surface. When installation has hardened sufficiently, paper, sheets, and pasting glue shall be removed from face mounted tile sheets, by brushing as much water as necessary onto the paper. Misplaced tiles shall be repositioned and reset, and damaged or defective tile shall be replaced.

7.4 Grouting. A thick slurry of gray portland cement and fine-screened sand of equal parts mixed with a minimum amount of water shall be brushed or squeegeed over the floor until all joints are thoroughly filled and excess slurry removed. Following beat-in and adjustment, the excess slurry shall be washed clean from the face of tile. Neat portland cement shall then be applied to the floor and forced into the joints with the edge of a wood block or trowel. Excess grout shall be removed by use of a sponge, squeegee, or burlap to finish the joints and clean the surface without disturbing the floor surface.

7.5 Curing. Floors shall be covered with waterproofed paper with joints lapped at least 4 inches and tape-sealed or held down with planks or other weights. Floors shall be allowed to damp-cure for at least 72 hours before foot traffic is permitted thereon.

8. CONTROL JOINTS. Joints shall be formed as indicated and sealed as specified in section: CALKING AND SEALING.

8.1 Walls. Control joints shall be provided at control joints in backing material. Wherever backing material changes, a control joint shall be formed to separate the different materials.

8.2 Floors. Control joints shall be provided over construction joints, control joints, and expansion joints in concrete slabs. Expansion joints shall extend through setting beds and fill.

9. CLEANING AND PROTECTING. Upon completion, tile floor and wall surfaces shall be thoroughly cleaned. Acid shall not be used for cleaning glazed tile. Floor tile with factory mixed grout shall be cleaned in accordance with the instructions of the grout manufacturer. After the grout has set, tile wall surfaces shall be given a protective coat of a noncorrosive soap or other approved method of protection. Tiled floor areas shall be covered with building paper before foot traffic is permitted over the finished tile floors. Board walkways shall be laid on tiled floors that are to be continuously used as passageways by workmen. Damaged or defective tiles shall be replaced.

* * * * *

SECTION 14L

METAL TOILET PARTITIONS

1. APPLICABLE PUBLICATIONS. The following publication of the issue listed below, but referred to thereafter by basic designation only, forms a part of this specification to the extent indicated by the references thereto.

1.1 Federal Specification (Fed. Spec.)

RR-P-1352	Partitions, Metal Toilet, Complete

2. GENERAL. Metal toilet partitions, including toilet enclosures, and urinal screens, shall conform to the layouts shown. Zinc coating on steel sheets shall be 1.25 commercial coating class, and color of panels noted on the drawings shall be selected from the manufacturer's standard colors.

2.1 Shop Drawings. Shop drawings shall be submitted for approval in accordance with the SPECIAL PROVISIONS. Shop drawings shall show plans, elevations, details of construction, gauges of metal, hardware, reinforcing, fittings, mountings, and anchorings.

2.2 Certificates. Certificates stating that the toilet partitions conform to the specified requirements shall be furnished in accordance with the SPECIAL PROVISIONS.

3. TOILET ENCLOSURES shall conform to RR-P-1352, type I, style A. Width of toilet enclosures shall be as shown. Finish surface of panels shall be baked enamel. Panels indicated to receive toilet paper holders or grab bars as specified in section TOILET ACCESSORIES shall be reinforced for the reception of the items required.

4. URINAL SCREENS shall conform to RR-P-1352, type III, style A. Finish surface of screens shall be baked enamel. Style A screens shall be 24 inches wide.

5. INSTALLATION. Toilet partitions shall be installed straight and plumb with all horizontal lines level and rigidly anchored to the supporting construction. Drilling and cutting for installation of anchors shall be at locations that will be concealed in the finished work. Doors shall have a uniform vertical edge clearance of approximately 3/16 inch and shall rest open at approximately 30 degrees when unlatched. Baked enamel finish shall be touched-up with the same type and color of paint that was used for the finish. Toilet partitions shall be cleaned and protected from damage until acceptance.

* * * * *

SECTION 14M

HARDWARE; BUILDERS'

Index

1. Applicable Publications
2. General
3. Templates
4. Submittals
5. Packaging, Marking, and Labeling
6. Finishes
7. Fastenings
8. Keying
9. Hardware
10. Locks and Latches
11. Door Trim
12. Exit Devices and Exit Device Accessories
13. Auxiliary Hardware
14. Butts and Hinges
15. Door Closing Devices
16. Cabinet Hardware
17. Miscellaneous
18. Application
19. Hardware Sets

1. APPLICABLE PUBLICATIONS. The following publication of the issues listed below, but referred to thereafter by basic designation only, form a part of this specification to the extent indicated by the references thereto.

1.1 American National Standards Institute (ANSI) Standards.

A156.1-1976	Butts and Hinges
A156.2-1976	Locks and Lock Trim
A156.3-1972	Exit Devices
A156.4-1972	Door Controls - Closers
A156.6-1972	Architectural Door Trim
A156.7-1972	Template Hinge Dimensions
A156.8-1974	Door Controls - Overhead Holders
A156.9-1975	Cabinet Hardware

1.2 American Society of Architectural Hardware Consultants (ASAHC) Publication.

Keying - Procedures, Systems and Nomenclature (Feb. 1975)

1.3 Builders Hardware Manufacturers Association (BHMA) Standards.

501 - 1976	Auxiliary Locks & Associated Products
1201 - 1970	Auxiliary Hardware
1301 - 1969(Rev. Dec 1973)	Materials & Finishes

Certified Products Directory (Feb 1975)

1.4 National Builders' Hardware Association (NBHA) Standard.

Recommended Locations for Builders' Hardware for Standard Steel Doors and Frames (1975)

1.5 National Fire Protection Association (NFPA) Publications.

80 - 1975	Standard for Fire Doors and Windows
101 - 1973	Code for Safety to Life from Fire in Buildings and Structures

2. GENERAL. Hardware shall conform to the applicable requirements of the standards listed herein, unless otherwise specified. Reinforcement for hardware in metal doors shall be as specified in sections STEEL DOORS AND FRAMES and ALUMINUM DOORS.

3. TEMPLATES. The Contractor shall furnish templates or information otherwise necessary to enable the door and frame manufacturer to make proper provision in his work to receive the specified hardware. Where 2 or more articles of hardware are to be mounted on the same door, the Contractor shall effect proper coordination between the manufacturers of the different articles. Templates of hinges shall conform to ANSI Standard A156.7.

4. SUBMITTALS. The Contractor shall submit an approvals list, certificates, test reports, and a hardware schedule in accordance with the requirements for shop drawings in the SPECIAL PROVISIONS.

4.1 Approvals List. Approvals list shall list each of the different articles of builders' hardware required. The list shall be submitted in the following form.

Item Number & Certification Designation	ANSI/BHMA Standard Reference	Functions or Type Number	Grade	Name of Article	Mfr's Name & Catalog No. of Article Supplied
1 (C)	A156.2	F82	1	Lock	ABC Lock Co. BOR99
2 (NC)	A156.1	A2111	1	Hinge	XYZ Hinge Co. OB123

Opposite each listed item number, the following shall be inserted as applicable: the symbol (C) denoting the item appears in a Certified Products Directory published by the Builders Hardware Manufacturers Association; the symbol (NC) indicating the item does not appear on the Certified Products Directory.

4.2 Certification and Test Reports. Hardware items with symbol (C) shall be accompanied by a certification that the items so noted appear in the BHMA Certified Products Directory. Hardware items listed above with the symbol (NC) shall be accompanied with certified independent laboratory test reports, indicating that the hardware items conform to the ANSI or BHMA standards under which the items are specified.

4.3 Hardware Schedule. Hardware schedule shall list all of the materials to be furnished and shall be submitted to the Contracting Officer for approval. The schedule shall include for each item; the quantities, manufacturer's catalog numbers, hinge and door closer sizes, detail information and location and hardware set identification, corresponding ANSI or BHMA standard type or function number to manufacturer's catalog number, complete keying schedule, and list of abbreviations and template numbers. The keying schedule shall be developed in accordance with ASAHC publication "Keying - Procedures, Systems and Nomenclature."

5. PACKAGING, MARKING, AND LABELING. Hardware shall be delivered to the project site in the manufacturer's original packages. Each article of hardware shall be individually packaged in the manufacturer's standard commercial carton or container, properly marked or labeled so as to be readily identifiable with the approved hardware schedule. Each change-key shall be tagged or otherwise identified with the door for which its cylinder is intended. Where double cylinder functions are used or where it is not obvious which is the key side of a door, appropriate instructions shall be included with the lock and on the hardware schedule.

6. FINISHES of the following types shall conform to the finishes identified under BHMA Standard 1301, and shall conform to the requirements of the standard under which the item is specified. Base materials shall be of the material identified by the finish number. Where painting of primed surfaces is required, painting is specified in section: PAINTING, GENERAL.

6.1 Hinges. Hinges shall have the following finishes.

6.1.1 Aluminum doors, hinges shall be 640.

6.1.2 Interior door hinges and inswinging exterior door hinges shall be 640.

6.1.3 Outswinging exterior door hinges shall be 640.

6.2 Lock and Door Trim Finishes. Lock and door trim finishes for the following types of doors and locations shall be as follows.

6.2.1 Aluminum door lock and trim shall be 613.

6.2.2 Main entrance door lock and trim shall be 613.

6.2.3 Other door lock and trim shall be 613.

6.3 Door Closer Finishes. Door closer finishes shall be 689.

6.4 Door Bottoms, astragals, weatherstripping shall be 613.

7. FASTENINGS of proper type, size, quantity, and finish shall be supplied with each article of hardware. Machine screws and expansion shields shall be used for attaching hardware to concrete, stone, or other masonry. Fastenings exposed to the weather in the finished work shall be of brass, bronze, or stainless steel, as applicable. Sex bolts, or machine screws and grommet nuts, where used on reverse-bevel exterior doors equipped with half-surface or full-surface hinges, shall employ one-way screws or other approved tamperproof screws. Screws for the jamb leaf of half-mortise and full-surface hinges attached to structural steel frames shall be the one-way type or other approved tamperproof type.

8. KEYING. Cylinder locks shall be keyed in sets or subsets as scheduled. Cylinder locks shall be furnished with manufacturer's standard construction master key system. Keys for cylinder locks shall be stamped with change number and the inscription "Do Not Duplicate". All cylinders shall be master keyed. Keys shall be supplied as follows:

Cylinder locks:	2 change keys each lock.
Master keyed sets:	4 keys each.
Construction master keys:	4 total.

The keys shall be turned over to the Contracting Officer properly tagged and designated as to location, and arranged in a container in sets or subsets as scheduled.

9. HARDWARE FOR FIRE DOORS shall conform to the requirements of NFPA Publications 80 and 101.

10. LOCKS AND LATCHES. To the maximum extent possible, locksets latchsets and deadlocks shall be the products of a single manufacturer. Mortise-type locks and latches for doors 1-3/4 inches thick and over shall have adjustable bevel fronts or otherwise conform to the shape of the door. Lock fronts for double-acting doors shall be rounded. Mortise locks shall have armored fronts. Strikes for wood frames and pairs of wood doors shall be furnished with wrought boxes. Trim for mortise locks and latches shall be escutcheon, minimum 7 by 1-3/4 inches with wrought top and cast shank, and conform to the requirements for wrought trim in accordance with ANSI Standard A156.2. Manufacturers' standard plain design shall be used.

10.1 Cylinder Locks. Clylinders shall have 6 pins with paracentric keyway. Cylinders for clyinder locks, and the cylinder locks, shall be the product of the same manufacturer.

10.2 Locksets and Latchsets. Locksets and latchsets shall conform to ANSI Standard A156.2, conforming to series 4,000, Grade 1.

10.3 Deadlocks. Deadlocks shall conform to BHMA Standard 501, mortise type, cylinder operated, E16000 series.

11. DOOR TRIM shall conform to ANSI Standard A156.6.

11.1 Combination Push-Pull Plates. Combination push-pull plates shall be Type J300, 1/8 inch minimum bronze 16" x 3-1/2".

11.2 Pull Plates pulls shall be Type J400, bronze, 15" x 3-1/2" steel.

11.3 Push Plates. Push plates shall be Type J300, bronze, size 16" x 8".

11.4 Kick Plates. Kick plates shall be Type J100, plastic black in color. Width of plates shall be 2 inches less than door width. Height shall be 10 inches except where the bottom rail is less than 10 inches, the plate shall extend to within 1/2-inch of the panel mold or glass bead.

12. EXIT DEVICES AND EXIT DEVICE ACCESSORIES shall conform to ANSI Standard A156.3.

12.1 Exit Devices. Exit devices shall be Type 6, function 02, grade 1.

12.2 Latching Thresholds. Latching threshold height shall be such that the bottom of the door shall be 1/8 inch over the tread of the threshold and 1/8 inch below the top of the stop.

13. AUXILIARY HARDWARE shall conform to BHMA Standard 1201.

13.1 Lever Extension Flush Bolts. Lever extension flush bolts shall be Type L14081 They shall be provided at the top and bottom of the inactive leaf of pairs of doors and shall be mortised in the lock edge of the door. Dust proof strikes shall be Type L14011.

13.2 Chain Door Stop. Chain door stop shall be Type L12231.

13.3 Door Stops. Door stops shall be Type L12141 for floor installation and Type L12101 for wall installation. A door stop shall be provided at each interior hinged door and at each inswinging exterior door.

14. BUTTS AND HINGES. Hinges shall conform to ANSI Standard A156.1. Hinges used on metal doors and frames shall also conform to ANSI Standard A156.7. Except for hinge sizes specified in paragraph HARDWARE SETS, hinge sizes shall conform to the hinge manufacturer's printed recommendations and shall be indicated on the hardware schedule.

14.1 Hinges for Reverse Bevel Doors with Locks. Hinges for reverse bevel doors with locks shall have pins that are made nonremovable by means such as a set screw in the barrel, or safety stud, when the door is in the closed position.

14.2 Contractors Option. Hinges with oil impregnated bearings may be furnished in lieu of grade 2 hinges. Fire door hinges shall be in accordance with NFPA Publication 80.

14.3 Outswinging Exterior Doors with Closers. Use Type A8111.

14.4 Outswinging Exterior Doors without Closers. Use Type A8133.

14.5 Inswinging Exterior Doors with Closers. Use Type A8112.

14.6 Inswinging Exterior Doors without Closers. Use Type A8133.

14.7 Interior Doors with Closers. Use Type A8112.

14.8 Interior Doors without Closers. Use Type A8133.

15. DOOR CLOSING DEVICES of the following types shall conform to ANSI Standard A156.4.

15.1 Surface Type Closers. Surface type closers shall be series C02000 with option PT-4C. Mounting details for the type closers specified shall be in accordance with paragraph: HARDWARE SETS. Size requirements shall conform to the manufacturer's published recommendations and shall be shown on the Contractors hardware schedule. Closers for outswinging exterior doors shall have standard or long parallel arms or shall be top jamb mounted as required for the particular opening. Closers for interior doors close to a wall shall be of narrow projection so as not to strike the wall at the 90 degree open position or shall have parallel arms. Surface type closers shall be the products of one manufacturer only.

16. CABINET HARDWARE shall conform to ANSI Standard A156.9.

16.1 Cabinet and Drawer Pulls shall be Type B12012.

16.2 Cabinet Hinges shall be Type B81581.

16.3 Cabinet Catches shall be Type B83071.

16.4 Adjustable Shelf Standards shall be Type B84072.

16.5 Shelf Clips shall be Type B84082.

16.6 Drawer Slide shall be Type B85062.

17. MISCELLANEOUS.

17.1 Door Bottoms. Door bottoms shall be a surface type with minimum 0.075 inch thick aluminum housing cover, anodized aluminum finish. Door bottom shall have a wool felt or rubber seal. The door bottom shall exclude light when the door is in the closed position.

17.2 Metal Thresholds. Thresholds for exterior metal doors with weatherstripping shall be as specified in section: STEEL DOORS AND FRAMES. Thresholds for wood doors are covered in section: WOOD DOORS. Thresholds for use with floor closers shall conform to ANSI Standard A156.4, Type C18011.

18. APPLICATION. Hardware shall be located on doors in accordance with NBHA Standard, "Recommended Locations for Builders' Hardware for Standard Steel Doors and Frames." When approved, slight variations in locations or dimensions will be permitted.

18.1 Hardware for Labeled Fire Doors. Hardware for labeled fire doors shall be installed in accordance with the requirements of NFPA Publications 80 and 101.

18.2 Door-Closing Devices. Door-closing devices shall be installed and adjusted in strict accordance with the templates and printed instructions supplied by the manufacturer of the devices. Insofar as practicable, doors opening to or from halls and corridors shall have the closer mounted on the room side of the door.

18.3 Kick Plates. Kick plates shall be installed on the push side of single-acting doors and on both sides of double-acting doors.

19. HARDWARE SETS shall be as follows:

HW-1 (Doors 101 and 202)

1 pr Butts, as required. A8111
1 ea Panic Bolt (Concealed Rod) Grade 1, Type 6, Function: 02
1 ea Panic Bolt (Concealed Rod) Grade 1, Type 6, Function: 05
1 ea Cylinder
2 ea Closers C02061 x PT-4C
2 ea Floor Stops L12131
2 ea Door Bottoms 315DN
1 ea Threshold 833.A Bronze
2 ea Meeting Astragals 351B

HW-2 (Doors 102 and 103)

1 pr Butts, as required. A8111
2 ea Panic Bolts (Concealed Rod) Grade 1, Type 6, Function: 02
2 ea Closers C02061 x PT-4C
2 ea Floor Stops L12131
2 ea Door Bottoms 315DN
1 ea Threshold 833.A Bronze
2 ea Meeting Astragals 351B

HW-3 (Door 201)

1 pr Butts, as required. A8111
1 ea Panic Bolt (Concealed Rod) Grade 1, Type 6, Function: 02
1 ea Closer C02061 with PT-4C
1 ea Floor Stop L12131
1 ea Threshold 833.A Bronze

HW-4 (Door 109)

1 pr Butts, as required. A8111
1 ea Panic Bolt (Concealed Rod) Grade 1, Type 6, Function: 02
1 ea Panic Bolt (Concealed Rod) Grade 1, Type 6, Function: 05
1 ea Cylinder
2 ea Closers C02061 x PT-4C
2 ea Kick Plates
2 ea Floor Stops L12131
2 ea Door Bottoms 315DN
1 ea Threshold 833.A Bronze
2 ea Meeting Astragals 351B
1 ea Set Weatherstripping 305DR (H&J)
2 ea Silencers L03011

HW-5 (Doors 209, 210, and 3)

1 pr Butts, as required. A8133
1 ea Deadlock C16071
1 ea Pull Plate J400
1 ea Chain Stop L82232
1 ea Door Bottom
1 ea Threshold 170B Bronze
3 ea Silencers L03011

HW-6 Not Used.

HW-7 (Doors 208 and 211)

1 pr Butts, as required. A8112
1 ea Deadlock E16091
1 ea Closer C02051
1 ea Push-Pull Plate J300
1 ea Pull Plate J400
1 ea Kick Plate J100

1 ea Floor Stop L12141
1 ea Door Bottom
3 ea Silencers L03011
1 ea Threshold 170B Bronze

HW-8 Not Used.

HW-9 (Doors 104 and 110)

1 pr Butts, as required. A8133
2 ea Flush Ext. Bolts L14081 x DPS L14011
1 ea Lock F82
2 ea Chain Stops L82232
2 ea Silencers L03011

HW-10 (Door 108)

1 pr Butts, as required. A8112
1 ea Lock F84
1 ea Closer C02021
1 ea Kick Plate J100
1 ea Floor Stop L12141
3 ea Silencers L03011

HW-11 (Doors 107, 203, and 204)

1 pr Butts, as required. A8133
1 ea Lock F82
1 ea Chain Stop (Door 107 only) L82232
1 ea Floor Stop L12141
3 ea Silencers L03011

HW-12 (Doors 105, 107, 207, and 212)

1 pr Butts, as required. A8112
1 ea Closer C02051
1 ea Push Plate J300
1 ea Pull Plate J400
1 ea Kick Plate J100
1 ea Floor Stop L12141
3 ea Silencers L03011

HW-13 (Doors 106, 205, and 206)

1 pr Butts, as required. A8133
1 ea Deadlock E16071
1 ea Pull Plate J400
1 ea Chain Stop L82232
3 ea Silencers L03011

HW-14 (Cabinet Hardware)

1 ea Pull
1 ea Set Drawer Slides length as required

1 ea Pair Cabinet Hinge B81581 Per Door
1 ea Pull B52012 Per Door
1 ea Catch B43172 ,Type 2 Per Door
4 pcs Shelf Standard B84072
4 ea Clips B84092

* * * * *

SECTION 14N

TOILET ACCESSORIES

Index

1. Applicable Publications
2. General
3. Samples and Descriptive Data
4. Anchors and Fasteners
5. Finishes
6. Accessory Items
7. Installation
8. Schedule

1. APPLICABLE PUBLICATIONS. The following specifications of the issues listed below, but referred to thereafter by basic designation only, form a part of this specification to the extent indicated by the references thereto.

1.1 Federal Specifications (Fed. Spec.).

L-C-780A & Int. Am-2 (GSA-FSS)	Curtain, Shower and Window, Plastic
W-H-50b	Hand Drier, Blower, Electric
DD-M-00411b (GSA-FSS) & Am-1	Mirrors, Glass
WW-P-541/8A (GSA-FSS) & Am-1	Plumbing Fixtures (Accessories, Land Use)

2. GENERAL. Toilet accessories as specified herein shall be provided in accordance with the SCHEDULE hereinafter. Porcelain type, tile-wall accessories are specified in section: TILE; CERAMIC. Each accessory item shall be complete with the necessary mounting plates, anchors, and fasteners. Concealed mounting plates shall be of sturdy construction with corrosion resistant surface.

3. SAMPLES AND DESCRIPTIVE DATA. One sample of each accessory proposed for use shall be submitted for approval. Samples shall be accompanied by descriptive data indicating materials of construction, fasteners proposed for use for each type of wall construction, recommended mounting locations, and mounting instructions. Approved samples may be incorporated into the finished work provided they are identified and their locations noted.

4. ANCHORS AND FASTENERS shall be capable of developing a restraining force commensurate with the strength of the accessory to be mounted and shall be well suited for use with the supporting construction. Where exposed fasteners are permitted, they shall have oval heads and finish to match the accessory, except exposed fasteners in all toilets shall be of tamper-proof design.

5. FINISHES. Finishes on metals shall be provided as follows.

Metal	Finish
Stainless steel	No. 4 general-purpose polished
Aluminum	Satin anodic, clear
Carbon steel, copper alloy and brass	Chromium plated, bright

6. ACCESSORY ITEMS shall conform to the respective specifications and other requirements specified below.

6.1 Grab Bar (GB). Grab bar shall conform to Fed. Spec. WW-P-541, Type IV, Class 2. Stainless steel tube shall be 1-1/4 inches O.D. Grab bar shall be form and length as indicated. Flange shall have screw mounting holes concealed on the lip of the flange. Grab bar shall have a smooth surface. Installed bars shall be capable of withstanding a 500 pound vertical load without becoming loose from the fastenings and without obvious permanent deformation.

6.2 Mirror, Glass (MG). Glass mirror shall conform to Fed. Spec. DD-M-411, Class 2, Style E.

6.3 Paper Towel Dispenser (PTD). Paper towel dispenser shall conform to Fed. Spec. WW-P-541, Type I, Class E, Mounting R, Style Q removable container shall be stainless steel.

6.4 Robe Hook (RH). Robe hook shall be copper or brass castings with dual pin integral with or permanently fastened to wall flange. Minimum projection shall be 1-3/4 inch.

6.5 Sanitary Napkin and Tampon Disposer (SND). Sanitary napkin and tampon disposer shall conform to Fed. Spec. WW-P-541, Type II, Mounting P, stainless steel. Reusable liner of the type standard with the manufacturer shall be provided.

6.6 Shower Curtain Rail (SCR). Shower curtain rail shall be stainless steel one-inch O.D. by 0.049 inch min. straight to meet installation conditions.

6.7 Soap Holder (SH). Soap holder shall conform to Fed. Spec. WW-P-541, Type VI, Class 2, stainless steel.

6.8 Toilet Tissue Dispenser (TTD). Toilet tissue dispenser shall conform to Fed. Spec. WW-P-541, Type I, Class I, Style A, stainless steel.

6.9 Electric Hand Drier shall conform to the applicable requirements of Fed. Spec. W-H-50.

6.10 Soap Dispenser (SD). Soap dispenser shall conform to Fed. Spec. FF-D-396, Type I.

7. INSTALLATION. Toilet accessories shall be securely fastened to the supporting construction in accordance with the approved submittals. Accessories shall be protected from damage from the time of installation until acceptance.

8. SCHEDULE:

Room	SD	RH	PTD	TTD	GB	MG	SND	SH	SCR
103	2	–	1	2	2	2	–	–	–
105	2	–	1	4	2	2	4	–	–
204	2	4	1	2	2	2	–	2	2
207	2	4	1	4	2	2	4	2	2

* * * * *

SECTION 14O

PLUMBING, GENERAL PURPOSE

Index

1. Applicable Publications
2. General
3. Materials, Fixtures, and Equipment
4. Approval of Materials, Fixtures, and Equipment
5. Electrical Work
6. Excavating, Trenching, and Backfilling
7. Soil, Waste, Drain, and Vent Piping
8. Pipe Cleanouts
9. Flashings
10. Traps
11. Shower Pans
12. Foundation Drainage
13. Drains and Backwater Valves
14. Water Pipe, Fittings, and Connections
15. Valves
16. Unions and Flanges
17. Wall Hydrants and Lawn Faucets
18. Vacuum Breakers or Backflow Preventers for Faucets and Fixtures
19. Types of Fixtures and Fixture Trimmings
20. Water Heaters
21. Relief Valves
22. Insulation
23. Pipe Sleeves, Hangers, and Fixture Supports
24. Identification Systems
25. Floor, Wall, and Ceiling Escutcheons
26. Painting
27. Inspection, Tests, and Sterilization
28. Guarantee for Water Heaters, Electric
29. Access Panels

1. APPLICABLE PUBLICATIONS. The following publications of the issues listed below, but referred to thereafter by basic designation only, form a part of this specification to the extent indicated by the references thereto.

1.1 Federal Specifications (Fed. Spec.).

L-T-0075 (ARMY-MO) & Am-1	Tape, Pipe-Coating; Pressure-Sensitive and Laminated
L-T-1512A	Tape, Pressure Sensitive Adhesive, Pipe Wrapping
O-C-114B & Am-1	Calcium Hypochlorite, Technical
O-S-602D	Sodium Hypochlorite Solution
W-H-196	Heater, Water, Electric, Residential
BB-C-120B	Chlorine, Technical: Liquid
HH-P-117	Packing; Jute, Twisted
HH-T-30B	Tape, Pipe-Coating, Coal Tar, Hot Applied: and Primer
QQ-C-40 & Am-2	Calking: Lead Wood and Lead Pig
QQ-C-576b & Am-1	Copper Flat Products with Slit, Slit and Edge-Rolled, Sheared, Sawed, or Machined Edges, (Plate, Bar, Sheet, and Strip)
QQ-L-201f & Am-2	Lead Sheet
QQ-S-571E & Am-2	Solder, Tin Alloy: Lead-Tin Alloy; and Lead Alloy
SS-C-153C	Cement, Bituminous, Plastic
TT-C-00598C (COM-NBS) & Am-1	Calking Compound, Oil and Resin Base Type (for Building Construction)
TT-P-1536A	Plumbing Fixture Setting Compound

WW-F-406C	Flanges, Cast-Iron (Classes 125 and 250) and Bronze (Classes 150 and 300)
WW-H-171D	Hangers and Supports, Pipe
WW-N-351C	Nipples, Pipe, Threaded
WW-P-351a & Am-1	Pipes; Red Brass, (Copper Alloy No. 230), Seamless Standard Pipe Size, Regular and Extra-Strong
WW-P-460b & Am-2	Pipe Fittings; Brass or Bronze (Threaded) 125- and 250-Pound
WW-P-491b	Pipe-Fittings; Cast-Iron (Threaded): Drainage
WW-P-521F	Pipe Fittings, Flange Fittings, and Flanges, Steel and Malleable Iron (Threaded and Butt-Welding) 150 Pound
WW-T-799E	Tube, Copper, Seamless, Water and Refrigeration (for Use With Solder-Flared- or Compression-Type Fittings)
WW-U-516B	Unions, Brass or Bronze, Threaded Pipe Connection and Solder-Joint Tube Connections
WW-U-531D	Unions, Pipe Steel or Malleable Iron; Threaded Connection 150 Lbs. and 250 Lbs.
WW-V-51E & Int. Am-2 (GSA-FSS)	Valve, Angle, Check, and Globe, Bronze (125, 150 and 200 Pound, Threaded End, Flange Ends, Solder Ends, and Brazed End for Land Use)
WW-V-54D & Int. Am-2 (GSA-FSS)	Valve, Gate, Bronze (125, 150 and 200 Pound, Threaded Ends, Flange Ends, Solder End and Brazed Ends, for Land Use)
WW-V-58B	Valves, Gate, Cast Iron; Threaded and Flanged (for Land Use)

1.2 Military Specifications (Mil. Spec.).

MIL-T-12295D	Tanks, Hot-Water Storage
MIL-V-13612C	Valves, Relief, Pressure and Temperature (For Hot Water Supply Systems)

1.3 U.S. Department of Commerce, National Bureau of Standards (NBS) Handbook.

H28	Screw-Thread Standards for Federal Services. Part I (1969); Parts II & III (1957 reprinted December 1966 with corrections)

1.4 U.S. Department of Housing and Urban Development, Federal Housing Administration(FHA) Publication.

Test Procedure and Performance Criteria of Materials for Use as Shower Pans (Appendix D of Minimum Property Standards, 1973) (Application for copies should be made to the Contracting Officer.)

1.5 American Insurance Association (AIA) Publication.

National Building Code (1976)

1.6 American National Standards Institute, Inc. (ANSI) Standards.

A117.1, 1961(R 1974)	Making Buildings and Facilities Accessible to, and Usable by, the Physically Handicapped
A112.21.1-1968(R 1974)	Floor Drains
A112.26.1-1969(R 1975)	Water Hammer Arreters
B16.18-1972	Cast Bronze Solder Joint Pressure Fittings
B16.22-1973	Wrought Copper and Bronze Solder-Joint Pressure Fittings
B16.23-1969 & B16.23a-1973	Cast Bronze Solder Joint Drainage Fittings - DWV
B16.26-1975	Cast Copper Alloy Fittings for Flared Copper Tubes
Z124.2-1967	Gel-coated Glass-fiber Reinforced Polyester Resin Shower Receptor and Shower Stall Units

1.7 American Society for Testing and Materials (ASTM) Specifications.

A 74-75	Cast Iron Soil Pipe and Fittings
A 120-73	Black and Hot-Dipped Zinc-Coated (Galvanized) Welded and Seamless Steel Pipe for Ordinary Uses
B 62-74	Composition Bronze or Ounce Metal Castings
B 88-76	Seamless Copper Water Tube
B 306-76	Copper Drainage Tube (DWV)
C 564-70	Rubber Gaskets for Cast Iron Soil Pipe and Fittings

1.8 American Society of Mechanical Engineers (ASME) Publications.

A40.8-1955	National Plumbing Code
Boiler and Pressure Vessel Code & Interpretations:	
Section VIII	Pressure Vessels, Division 1 (1974; Addenda: Summer & Winter 1974; Summer & Winter 1975; Summer 1976)
Section IX	Welding and Brazing Qualification Addenda: Summer & Winter 1974; Summer & Winter 1975; Summer 1976)

1.9 American Water Works Association (AWWA) Standard.

C506-69	Backflow Prevention Devices – Reduced Pressure Principle and Double Check Valve Types

1.10 Cast Iron Soil Pipe Institute (CISPI) Standards.

301-72 Hubless Cast Iron Sanitary System: With No-Hub Pipe and Fittings

Pamphlet No. 100 Installation Suggestions for No-Hub Pipe and Fittings

1.11 National Association of Plumbing-Heating-Cooling Contractors (NAPHCC) Standard.

National Standard Plumbing Code - 1975

1.12 National Fire Protection Association (NFPA) Standards.

1.13 International Association of Plumbing and Mechanical Officials, L.A., California, 90032.

1.14 Uniform Mechanical Code (UMC).

1.15 Uniform Plumbing Code (U.P.C.).

1.16 City of Scottsdale Bldg. Codes.

1.17 Plumbing and Drainage Institute (PDI) Standard.

PDI-WH 201 Water Hammer Arresters (1974)

2. GENERAL. The general arrangement of the plumbing shall be as indicated. Detailed drawings of proposed departures due to actual field conditions or other causes shall be submitted to the Contracting Officer for approval. The Contractor shall carefully examine the drawings and shall provide for the proper fitting of materials and equipment in each building, as indicated, without substantial alteration. Material and equipment shall be suitable for the pressures and temperatures encountered. Installation shall be as required by ASME A40.8, National Plumbing Code or the National Standard Plumbing Code (NAPHCC) and as specified herein.

2.1 Utilities. Water and drainage piping shall be extended 5 feet outside the building, unless otherwise indicated, where the piping shall be connected to the exterior service lines or capped or plugged if the exterior service is not in place. Sewer and water pipes shall be laid in separate trenches, except when otherwise shown. Utilities shall be installed below the frostline. If the trenches are closed or the pipes are otherwise covered before being connected to the service lines, the location of the end of each plumbing utility shall be marked with a stake or other acceptable means.

2.2 Cross Connections and Interconnections. No plumbing fixture, device, equipment, or pipe connection shall be installed that will provide a cross connection or interconnection between a potable water supply and any source of nonpotable water, such as a drainage system, a soil or waste pipe, or a boiler or cooling tower where the water may be chemically treated.

2.3 Connections to Equipment and Fixtures. The Contractor shall provide all necessary material and labor to connect to the plumbing system all fixtures and equipment having plumbing connections, which are specified in other sections of the specifications. Drainage connections shall be trapped. The supply line to each item of equipment or fixture, except faucets, flush valves, or other control valves which are supplied with an integral stop, shall be equipped with a cutoff valve to enable isolation of the item for repair and maintenance without interfering with operation of other equipment or fixtures. Supply piping to all fixtures, shower heads, and flush valves shall be anchored to prevent movement.

2.4 Drawings. Because of the small scale of the drawings, it is not possible to indicate all offsets, fittings, and accessories that may be required. The Contractor shall carefully investigate the structural and finish conditions affecting all his work and shall arrange such work accordingly, furnishing required fittings, traps, valves, and accessories to meet such conditions.

2.5 Cutting and Repairing. The work shall be carefully laid out in advance, and unnecessary cutting of construction shall be avoided. Damage to buildings, piping, wiring, or equipment as a result of cutting for installation shall be repaired by mechanics skilled in the trade involved.

2.6 Protection to Fixtures, Materials, and Equipment. Pipe openings shall be closed with caps or plugs during installation. Fixtures and equipment shall be tightly covered and protected against dirt, water, and chemical or mechanical injury. Upon completion of all work, the fixtures, materials, and equipment shall be thoroughly cleaned, adjusted, and operated. Belts, pulleys, chains, gears, couplings, projecting setscrews, keys, and other rotating parts located so that any person may come in close proximity thereto, shall be fully enclosed or properly guarded.

3. MATERIALS, FIXTURES, AND EQUIPMENT shall conform to the respective publications and requirements specified below. Fixtures and equipment shall be the products of manufacturers regularly engaged in the manufacture of such products. Fixtures and equipment differing in minor respects from that specified may be proposed, provided such differences are clearly indicated on data submitted for approval. If the Contracting Officer judges the product to be equal to or better than that specified, the product will be considered; and if based on a technical evaluation, the Contracting Officer judges the difference to be minor, he may approve the use of the product.

3.1 Bituminous Cement. Fed. Spec. SS-C-153, Type I with asphalt saturated felts and Type II with coal-tar-pitch felts.

3.2 Calking.

3.2.1 Compound. Fed. Spec. TT-C-598, Type I.

3.2.2 Lead. Fed. Spec. QQ-C-40, Type I.

3.3 Copper. Fed. Spec. QQ-C-576, sheet form, light cold-rolled temper.

3.4 Felt for Shower Pans. ASTM D 226, 15-pound type.

3.5 Fittings.

3.5.1 Cast Iron Pressure Fittings. ANSI A21.10.

3.5.2 Cast Iron Soil-Pipe Fittings. ASTM A 74.

3.5.3 Cast Iron Threaded Fittings. Fed. Spec. WW-P-501, Type I, Class 125 or 250.

3.5.4 Drainage Fittings. Fed. Spec. WW-P-491, Type I or II. Cast bronze solder-joint drainage fittings ANSI B16.23.

3.5.5 Fittings for Brass or Copper Pipe. Fed. Spec. WW-P-460, Class A or B.

3.5.6 Fittings for Copper. Wrought copper and bronze solder-joint pressure fittings shall conform to ANSI B16.22. Cast bronze solder-joint pressure fittings shall conform to ANSI B16.18. Flared brass fittings shall conform to ANSI B16.26 and ASTM B 62.

3.5.7 Malleable-Iron Fittings. Fed. Spec. WW-P-521, Type I, except that Type II shall be used where connected to zinc-coated piping.

3.5.8 Nipples. Fed. Spec. WW-N-351, same material as pipe system where used.

3.5.9 Unions. Fed. Spec. WW-U-516, WW-U-531, or WW-F-406, as applicable, and where used in connection with tubing modified therefor.

3.6 Nonmetallic Shower Pans. Materials for nonmetallic shower pans shall comply with the tests established by the FHA Publication No. 4900.1, Appendix D, article entitled "Test Procedure and Performance Criteria of Materials for Use as Shower Pans."

3.6.1 Laminated asphalt paper and plastic material for shower pans shall consist of eight plies of kraft paper bonded by six layers of asphalt and one layer of polyethylene and reinforced with three layers of fiberglass yarns, tri-directional, faced with polyethylene, and having a total weight of not less than 0.40 pounds per square foot. Kraft paper for shower pans shall consist of eight plies conforming to Fed. Spec. UU-B-790, Type I, Grade A, Style 4.

3.6.2 Nonplasticized chlorinated polyethylene shower pan material shall consist of a plastic waterproofing membrane in sheet form which can be shaped into a shower pan. The material shall be 0.040 inch minimum thickness of nonplasticized chlorinated polyethylene. The material shall have the following properties and meet the typical values for the listed ASTM Test Methods.

ASTM D 412	
Ultimate Tensile Strength	1690 psi
Ultimate Elongation	530 percent
100 Percent Modulus	445 psi
ASTM D 1004	
Tear Strength	8 lbs.
ASTM D 568	
Flammability	Non-burning.
Other Properties	
Specific Gravity	1.29
Xylene Solvent Weldable	

3.7 Pipe and Tubing.

3.7.1 Brass Pipe. Fed. Spec. WW-P-351, Class I.

3.7.2 Cast Iron Pressure Pipe. Fed. Spec. WW-P-421, Class 150.

3.7.3 Cast Iron Soil Pipe. ASTM A 74, as modified below.

3.7.4 Copper Tubing and Tube, DWV. Copper tubing for water piping shall conform to ASTM B 88, type as specified below. Copper drainage-waste and vent tube, DWV, shall conform to ASTM B 306.

3.7.5 Steel Pipe. ASTM A 120, Schedule 40.

3.7.6 Pipe Hangers and Supports. Fed. Spec. WW-H-171, types as specified.

3.8 Plumbing Drains. Fed. Spec. WW-P-541, without chair carriers. Polyethylene floor drains with clamping device, ASTM D 1248.

3.9 Plumbing Fixture Setting Compound. Fed. Spec. TT-P-1536, Type II.

3.10 Roofing Asphalt for Shower Pans.

3.10.1 Hot-Applied Asphalt for Coating Laminated Asphalt Kraft Paper for Shower Pans. Fed. Spec. SS-A-666, Type V.

3.10.2 Cold-Applied Asphalt for Coating Laminated Asphalt Kraft Paper for Shower Pans. Fed. Spec. SS-C-153, Type I.

3.11 Sheet Lead. Fed. Spec. QQ-L-201, Grade B.

3.12 Solder. Fed. Spec. QQ-S-571, composition Sn50.

3.13 Twisted-Jute Packing. Fed. Spec. HH-P-117, Type I, dry, for calking Type I cast iron water pipe; Type II, tarred, or as specified below, for calking cast iron soil pipe.

3.14 Tape.

3.14.1 For Threaded Pipe Joints. Mil. Spec. MIL-T-27730.

3.14.2 For Pipe-Joint Coating. Fed. Spec. L-T-75, Type II; Fed. Spec. L-T-1512; or Fed. Spec. HH-T-30, as specified below.

3.15 Valves.

3.15.1 Angle, Check, and Globe Valves. Fed. Spec. WW-V-51, Class A or B, type as suitable for the application, and where used in connection with tubing, modified therefor.

3.15.2 Gate Valves. Fed. Spec. WW-V-54, Type I, II, or III, Class A or B, or Fed. Spec. WW-V-58, Type I or II, Class 1 or 2, as applicable; and where used in connection with tubing, modified therefor.

4. APPROVAL OF MATERIALS, FIXTURES, AND EQUIPMENT. Before starting installation, the Contractor shall submit to the Contracting Officer for approval, in accordance with the SPECIAL PROVISIONS, layout drawings and lists of materials, fixtures, and equipment to be incorporated in the work. The layout drawings shall consist of plans drawn to scale, with elevations and sections to show clearly the location and size of major items of equipment and large piping, and clearances for maintenance withdrawal of removal components. If departures from the contract drawings are deemed necessary by the Contractor, details of such departures, including changes in related portions of the project and the reasons therefor, shall be submitted with the drawings. Where such departures require piping or equipment to be supported otherwise than shown, the details submitted shall include loadings and type and kinds of frames, brackets, stachions, or other supports necessary. Approved departures shall be made at no additional cost to the Government. The lists of materials and equipment shall be supported by sufficient descriptive material, such as catalogs, cuts, diagrams, and other data published by the manufacturer, as well as evidence of compliance with safety and performance standards, to demonstrate conformance to the specification requirement; catalog numbers alone will not be acceptable. The data shall include the name and address of the nearest service and maintenance organization that regularly stocks repair parts. One copy of the layout drawings and ofeach list will be returned, marked to indicate approval.

5. ELECTRICAL WORK. Electric motor-driven equipment specified herein shall be provided complete with motor. Electrical equipment and wiring shall conform to section: ELECTRICAL WORK, INTERIOR. Electrical characteristics shall be as indicated. Manual or automatic control and protective or signal devices required for operation herein specified and any wiring required but not shown on the electrical drawings shall be provided. A complete electricl-connection diagram for each piece of mechanical equipment having more than one automatic or manual electrical-control device shall be submitted for approval.

6. EXCAVATING, TRENCHING, AND BACKFILLING is specified in section: EXCAVATION, FILLING, AND BACKFILLING FOR BUILDINGS.

7. SOIL, WASTE, DRAIN, AND VENT PIPING. Underground soil, waste, and drain pipe and fittings shall be service weight hub-type cast iron except that hubless cast iron pipe may be installed in locations where piping can be removed and replaced. Hubless cast iron pipe shall not be installed under concrete floor slabs on grade and concrete basement floors. Stainless steel clamps for hubless cast iron pipe installed underground shall be coated and wrapped as specified below for water piping except the coating may be field applied. Cast iron pipe and fittings installed under slab on grade shall be coated and wrapped as specified below for water piping except that coating may be field applied. Aboveground soil, waste, drain, and vent piping, including interior downspouts, shall be galvanized steel, service weight cast iron soil pipe with or without hubs, or copper tubes DWV. Cast iron soil pipe and fittings without hubs shall conform to the Cast Iron Soil Pipe Institute Standard 301. Fittings for aboveground pipe shall be cast iron of the drainage pattern and shall be compatible with the pipe material except where adapters are required for interconnection of different pipe materials. Fittings on dry vents shall be regular-pattern type.

7.1 Installation.

7.1.1 Drainage and Vent Pipes. Main vertical soil and waste stacks shall be extended full size to the roofline and above as vents, except where otherwise specifically indicated. Where practicable, two or more vent pipes shall be connected and extended as one pipe through the roof. Vent pipes in roof spaces shall be run as close as possible to the under side of the roof without forming traps in pipes, using fittings as required. Vertical vent pipes may be connected into one main vent riser above vented fixtures. Cast iron soil pipe hubs inside buildings shall be extended 6 inches above the lowest floor where the floor is supported on the ground, and 6 inches aboveground where the lowest floor is self-supporting. Horizontal waste lines shall be sloped to drain at 1/4-inch/ft unless otherwise indicated or approved.

7.1.2 Fittings. Changes in pipe size on soil, waste, and drain lines shall be made with reducing fittings. Changes in direction shall be made by the use of fittings.

7.1.3 Union Connections. Slip joints will be permitted only in trap seals; on the inlet side of the traps; and on "P" trap assemblies consisting of an adjustable "P" trap and waste tubing to wall with escutcheons as specified hereinafter. Tucker or hub drainage fittings shall be used to make union connections wherever practicable. Use of bushings will not be permitted.

7.2 Joints. Installation of pipe and fittings shall be made in accordance with the manufacturers' recommendations. Mitering of joints for elbows and notching of straight runs of pipe for tees will not be permitted. Threaded joints shall have American National taper pipe threads conforming to NBS Handbook H28, with graphite or inert filler and oil, with an approved graphite compound, or with polytetrafluoroethylene tape applied to the male threads only.

7.2.1 Cast Iron Soil Pipe. Joints in hub-type cast iron soil pipe and fittings shall be firmly packed with either tarred twisted jute or a preservative-treated twisted jute covered with a braided-yarn jacket to provide a uniform rope-like strand and calked with lead at least one inch deep. Joints in cast iron soil pipe and fittings using a double-seal, compression-type molded neoprene gasket shall be provided with a modified hub as required to provide a positive seal. Joints in cast iron soil pipe and fittings without hubs shall be made using a mechanical compression-type coupling consisting of a noeprene collar, stainless steel band with transverse corrugations and two stainless steel clamps with stainless steel setscrews all assembled to provide a positive seal, and shall conform to Pamphlet 100 of the Cast Iron Soil Pipe Institute.

7.2.2 Copper Tube DWV. Joints for tubing shall be made with solder-type fittings. Tube shall be cut square with burs removed. Outside of tube where engaged in the fitting and inside of the fitting in contact with the tube shall be cleaned with an abrasive material before sweating. Care shall be taken to prevent annealing of tube and fittings when making connections. Joints shall be made with a noncorrosive paste flux and solid-string or wire solder. Core solder will not be permitted. Joints 2-1/2 inches and larger shall be made with heat applied uniformly around the entire circumference of the tube and fittings by a multiflame torch.

8. PIPE CLEANOUTS shall be the same size as the pipe except that cleanout plugs larger than 4 inches will not be required. A cleanout installed in connection with cast iron soil pipe shall consist of a long-sweep 1/4 bend or one or two 1/8 bends extended to the place shown. An extra-heavy cast brass or cast iron ferrule with countersunk cast brass head screw plug shall be calked into the hub of the fitting and shall be flush with the floor. Cleanouts in connection with other pipe, where indicated, shall be T-pattern, 90-degree branch drainage fittings with cast brass screw plugs of the same size as the pipe up to and including 4 inches. Cleanout tee branches with screw plug shall be installed at the foot of soil and waste stacks, at the foot of interior downspouts, on each connection to building storm drain where interior downspouts are indicated, and on each building drain outside the building. Cleanout tee branches may be omitted on stacks in single-story buildings with slab-on-grade construction or where less than 18 inches of crawl space is provided under the floor. Cleanouts on pipe concealed in partitions shall be provided with chromium-plated bronze, nickel bronze, nickel brass or stainless steel flush type access cover plates. Round access covers shall be provided and secured to plugs with securing screw. Square access covers may be provided with matching frames, anchoring lugs and cover screws. Cleanouts in finished walls shall have access covers and frames installed flush with the finished wall. Cleanouts installed in finished floors subject to foot traffic shall be provided with a chrome-plated cast brass, nickel brass, or nickel bronze cover secured to the plug or cover frame and set flush with the finished floor. Heads of fastening screws shall not project above the cover surface.

9. FLASHINGS. Pipes passing through waterproofing membrane shall be flashed as specified per paragraph PIPE SLEEVES, HANGERS, AND FIXTURE-SUPPORTS. A sheet-lead flashing shield shall be provided for drains and pipe sleeves with integral clamping devices that penetrate a membrane. Flashing shield shall be made from sheet lead not lighter than 4-pound, and extend not less than 8 inches from the drain or sleeve in all directions. Flashing shall be inserted into the clamping device and made watertight. Lead flashing shields, and roof flanges of lead or copper flashing with integral flange, shall be set over membrane in a solid coat of a bituminous cement and strip-flashed as specified in section: BUILT-UP ROOFING. Pipes passing through pitched roofs shall be flashed using lead or copper flashing with an adjustable integral flange of adequate size to extend not less than 8 inches from the pipe in all directions and lapped into the roofing to provide a watertight seal.

10. TRAPS. Each fixture and piece of equipment requiring connections to the drainage system, shall be equipped with a trap. Each trap shall be placed as near the fixture as possible, and no fixture shall be double-trapped. Traps installed on cast iron soil pipe shall be cast iron. Traps installed on steel pipe or copper tube shall be recess-drainage pattern, or brass-tube type as specified below.

11. SHOWER PANS.

11.1 General. Shower pans to be constructed from nonmetallic material conforming to the material requirements above specified. The floor of each individual shower, the shower-area portion of combination shower and drying room, and the combined shower and drying room not separated by curbing or partition shall be made watertight with a shower pan fabricated in place. The shower pan material shall be cut to size and shape of the area indicated, in one piece to the maximum extent practicable, allowing not less than 6 inches for turnup on walls or partitions, and shall be folded over the curb with an approximate return of 1/4 curb height. The upstands shall be placed behind walls or partition finish. Subflooring shall be smooth and clean with nailheads driven flush with surface and shall be sloped to drain. Shower pans shall be clamped to drain as specified below. After installation of the pan and the finished floor, the drain shall be temporarily plugged below the weep holes. The floor area shall be flooded with water to a minimum depth of one inch and held for a 24-hour period. Any drop in the water level during the test, except for evaporation, shall be reason for rejection, repair and retest.

11.2 Laminated Asphalt, Kraft Paper and Plastic Material for Shower Pans. Separated pieces of laminated material shall be lapped not less than 6 inches and mopped in with hot applied roofing asphalt. Joints shall be covered with a 12-inch wide strip of the laminated material and mopped on both sides with hot applied roofing asphalt. Hot applied roofing asphalt shall be applied at not less than 30 pounds per 100 square feet of surface. Cold applied bituminous plastic cement may be used as option to hot applied roofing asphalt and shall be applied in accordance with manufacturer's recommendations. Corners of laminated material shall be pressed flat and secured to wall partition by a suitable fastener positioned in the top inch of the laminated asphalt-paper material.

11.3 Nonplasticized Chlorinated Polyethylene Shower Pan. Nonplasticized chlorinated polyethylene shower pans shall be installed by craftsmen trained and experienced in accordance with the manufacturer's installation instruction. Corners shall be folded against the upstand by making a pig ear fold. Hot air gun or heat lamp shall be used in making corner folds. Nail or staple each pig ear corner fold 1/2 inch from the upper edge to hold it in place. Nails shall be galvanized large head roofing nails. On metal framing or studs, approved duct tape shall be used to secure pig ear fold and membrane. Where no backing is provided between the studs, the membrane slack shall be taken up by pleating and stapling or nailing to studding 1/2 inch from upper edge. To adhere the membrane to vertical surfaces, the back of the membrane and the surface to which it will be applied shall be coated with adhesive. The coated adhesive shall become dry to the touch in about 5 to 10 minutes after which the membrane shall be pressed into place. Surfaces to be solvent-welded shall be clean. Surfaces to be joined with xylene shall be initially sprayed and vigorously wiped clean with a clean cotton cloth. A final coating of xylene shall be applied and the surfaces joined. Pressure applied by roller or equivalent means shall be used to join surfaces. If ambient or membrane temperatures are below 40 F, heat the membrane prior to application of xylene and the joint. Heat may be applied with hot air gun or heat lamp and precautions shall be taken not to scorch the membrane. Adequate ventilation and gloves are required when working with xylene since fumes can cause dizziness and xylene can cause skin irritations. Membrane shall be pressed into position on the drain body and cut and fit to match so that membrane can be properly clamped and provide an effective gasket type seal. On wood subflooring, two layer of 15-pound dry felt shall be installed prior to installation of shower pan to assure a smooth surface for installation.

12. FOUNDATION DRAINAGE is specified in section: EXCAVATION, FILLING, AND BACKFILLING FOR BUILDINGS.

13. DRAINS AND BACKWATER VALVES. Shower, floor, and area drains shall be as specified below and the service duty shall be as shown. The size of the drains shall be determined by the branch sizes indicated. Drains and backwater valves installed in connection with waterproofed floors or shower pans shall be equipped with bolted-type clamping devices and shall be installed as specified in section: BITUMINOUS WATERPROOFING.

13.1 Drains.

13.1.1 Floor and shower drains shall generally consist of a body, integral seepage pan and adjustable perforated or slotted strainer consisting of grate and threaded collar. Drains shall be of double drainage pattern suitable for embedding in the floor construction. The seepage pan shall have weep holes or channels which will provide drainage from the pan to the drainpipe. The strainer shall be adjustable to varying floor thicknesses. A suitable clamping

device for attaching flashing or waterproofing membrane to the seepage pan without damaging the flashing or waterproofing membrane shall be provided when required. Cast iron floor drains shall be installed in all locations except in locations where metallic waterproofing membrane is installed. Where metallic shower pan membrane is installed, polyethylene drain with corrosion-resistant screws for securing the clamping device shall be provided. Cast iron floor drains shall have a heavy cast iron body and seepage pan and a chromium-plated bronze, nickel bronze or nickel brass strainer. In lieu of a calked joint between the drain outlet and waste pipe, a nioprene rubber gasket conforming to ASTM C 564 may be installed provided that the drain is specifically designed for the rubber gasket compression type joint. Certified independent laboratory tests indicating that the rubber gasket compression joint will not leak when tested with not less than 5 feet head of water for not less than one hour shall be provided. The rubber gasket joint shall be installed as recommended by the drain manufacturer. Drains shall be provided with threaded or calked connections. Polyethylene drain shall have adapter fitting which will adapt drain to waste piping. Polyethylene floor drains shall be constructed of polyethylene conforming to ASTM D 1248. Drains shall be provided with separate cast iron "P" trap unless otherwise indicated. Drains shall have circular body, seepage pan, and strainer, unless otherwise indicated. Cast iron floor and shower drains shall conform to ANSI A112.21.1, Fig. 3.3.

13.1.2 Sight drains shall generally consist of body, integral seepage pan and adjustable strainer with perforated or slotted grate and funnel extension. The strainer shall have a threaded collar which will permit adjustment to varying floor thicknesses. Drains shall be of double drainage pattern suitable for embedding in the floor construction. A suitable clamping device for attaching flashing or waterproofing membrane to the seepage pan without damaging the flashing or waterproofing membrane shall be provided when required. Drains shall have a heavy cast iron body and seepage pan and chromium plated bronze, nickel bronze or nickel brass strainer and funnel combination. Drains shall be provided with threaded or calked connection and provided with separate cast iron "P" trap unless otherwise indicated. Drains shall be of circular pattern unless otherwise indicated. Drains will be installed so that the indirect waste will terminate 2 inches above the flood rim of the funnel to provide an acceptable air gap. The funnel shall be securely mounted over an opening in the center of the strainer. Minimum dimensions shall be as follows:

Area of strainer and collar	36 square inches
Height of funnel	3 3/4 inches
Diameter of lower portion of funnel	2 inches
Diameter of top portion of funnel	4 inches

13.1.3 Floor sink shall be of circular or square pattern with 12-inch nominal overall width or diameter and 10-inch nominal overall depth. Floor sink shall be acid-resistant enamel interior with cast iron body,and aluminum sediment bucket. The calk outlet pipe size shall be as indicated or the same size as connecting pipe. Provide cast iron perforated grate.

13.2 Backwater Valves. Valves shall be separate either from floor drains or a combination floor-drain, P-trap, and backwater valve, as shown. Valves shall have cast iron bodies with cleanouts of sufficient size to permit removal of interior parts. Valves shall be of the flat-type, hinged or pivoted, with revolving disks. Hinge pivots, disks, and seats shall be nonferrous metal. Normal position of the disks shall be slightly open. Cleanouts shall be extended to finished floor and fitted with threaded countersunk plugs.

14. WATER PIPE, FITTINGS, AND CONNECTIONS.

14.1 Water Pipe. Water-service pipe to the structure and cold-water piping underground within the structure shall be cast iron pressure pipe, galvanized steel, or Type K copper tubing. Water-service pipe shall extend from approximately 6 inches above the lower floor or inside the structure wall to a point not less than 5 feet outside the structure into undisturbed soil. Cast iron water-service pipe inside the structure shall terminate with a flange adapter. Cold-water pipe aboveground and inside the structure shall be galvanized steel, Type L copper tubing, or iron-pipe-size brass pipe. Domestic hot-water piping aboveground shall be Type L copper tubing, or iron-pipe-size brass pipe. Domestic hot-water piping underground within the structure shall be Type K copper tubing. Exposed cold- and hot-water supply piping shall be chrome-plated brass pipe to the shutoff or stop valve of each fixture. Piping connection from the shutoff or stop valve to the fixture shall be as specified below.

14.2 Fittings. Fittings for cast iron pressure pipe shall be cast iron pressure fittings. Fittings for Type K copper tubing shall be flared brass or solder-type bronze or wrought copper. Fittings for Type L copper tubing shall be solder-type bronze or wrought copper. Fittings for chrome-plated tubing shall be chrome-plated brass. Fittings for galvanized steel pipe shall be galvanized malleable iron. Fittings for brass pipe shall be brass.

14.3 Installation. A gate valve and drain on the service line shall be installed inside the building as close to the floor or wall as possible. Service piping shall be installed below the frostline. The piping shall be extended to all fixtures, outlets, and equipment from the gate valve. The hot-water and cold-water piping system shall be installed so as to be drained.

14.3.1 Piping shall be installed as indicated. Pipe shall be cut accurately to measurements established at the building by the Contractor and shall be worked into place without springing or forcing. Care shall be taken not to weaken structural portions of the building. Aboveground piping shall be run parallel with the lines of the building

unless otherwise indicated. Branch pipes from service lines may be taken from top, bottom, or side of main, using such crossover fittings as may be required by structural or installation conditions. Supply pipes, valves, and fittings shall be kept a sufficient distance from other work and other services to permit not less than 1/2 inch between finished covering and other work and not less than 1/2 inch between finished covering on the different services. No water pipe shall be buried in floors unless specifically indicated or approved. Changes in pipe sizes shall be made with reducing fittings. Use of bushings will not be permitted. Change in direction shall be made with fittings except that bending of pipe 4 inches and smaller will be permitted, provided a pipe bender is used and wide sweep bends are formed. The centerline radius of bends shall be not less than 6 diameters of the pipe. Bent pipe showing kinks, wrinkles, flattening or other malformations will not be accepted.

14.3.2 Pipe drains indicated shall consist of 1/2-inch globe valves with renewable disks and 3/4-inch hose nipples. Provide 1/2-inch brass plugs or caps at all other low points. Disconnection of the supply piping at the fixture is an acceptable drain.

14.3.3 Allowance shall be made throughout for expansion and contraction of pipe. Branch connections from risers shall be made with ample swing or offset to avoid undue strain on fittings or short-pipe lengths. Horizontal runs of pipe over 50 feet in length shall be anchored to the wall or the supporting construction about midway on the run to force expansion, evenly divided, toward the ends. Sufficient flexibility shall be provided on all branch runouts from mains to risers to provide for expansion and contraction of piping. Flexibility shall be provided by installing one or more turns in the line so that piping will spring enough to allow for expansion without straining.

14.3.4 Commercial-type water hammer arresters shall be provided on hot and cold water supplies and shall be located as close as practicable to each faucet control valve or flush valve, except lawn faucets, wall hydrants, and hose faucets unless otherwise indicated. Water hammer arresters shall be accessible. Commercial-type water hammer arresters shall be tested in accordance with PDI-WH 201 or ANSI A112.26.1. Water hammer arresters shall be sized and located in accordance with ANSI A112.26.1 and installed as recommended by the manufacturer.

14.4 Joints. Connections between ferrous and nonferrous metallic pipe installed underground and connections to water heaters shall bee made with dielectric unions or flanges specified below. Installation of pipe and fittings shall be made in accordance with the manufacturers' recommendations. Mitering of joints for elbows and notching of straight runs of pipe for tees will not be permitted. Threaded joints shall have American National taper pipe threads conforming to NBS Handbook H28 with graphite or inert filler and oil, with an approved graphite compound, or with polytetrafluoroethylene tape applied to the male threads only. Unions shall be provided where required for disconnection.

14.4.1 Lead joints for Type I pipe shall be made by centering the spigot within the bell and packing the joint with closely compacted jute packing material so as to leave a 2-inch depth for the lead. The materials shall be handled with care to prevent contamination, shall be dry when placed in the joint, and shall be free of oil, tar, and grease. Each joint shall be made in one continuous pouring from the ladle. Joints shall be poured full, then thoroughly calked at least three times around with calking tools of proper width. Joint material for Type II and Type III pipe shall be as specified in Fed. Spec. WW-P-421.

14.4.2 Flared or sweated tubing shall be cut square, and burs shall be removed. Flared joints shall be made using flared fittings. Joints in copper tubing shall be made as specified in paragraph SOIL, WASTE, DRAIN, AND VENT PIPING.

14.5 Protective Coatings for Pipe and Fittings. The exterior surfaces of metallic pipe and fittings, except copper, that are installed underground shall be thoroughly cleaned of foreign matter by wire brushing and solvent cleaning. Using primer and tape conforming to Fed. Spec. L-T-75, Type II or tape conforming to Fed. Spec. L-T-1512 and primer as recommended by the tape manufacturer, the pipe shall be primed and immediately wrapped with the tape applied with a 50 percent overlap. Joints and fittings shall be covered with the same primer and tape, or shall be primed and handwrapped with primer and hot-applied preformed coal tar tape conforming to Fed. Spec. HH-T-30. Joints and fittings shall be coated and wrapped after piping has been tested. Pipe shall be coated and wrapped during installation. Piping system shall be tested as specified below.

15. VALVES shall be provided on supplies to equipment or fixtures if not specified in paragraph TYPES OF FIXTURES AND FIXTURE TRIMMINGS. Valves in connection with runouts, risers, branches, and mains shall be in accordance with these specifications and installed where indicated. All valves shall be gate valves unless otherwise specified or indicated. Valves up to and including 3 inches shall be bronze with threaded ends for pipe and sweat-type connections for tubing.

16. UNIONS AND FLANGES. Unions on ferrous pipe 2 inches in diameter and smaller shall be malleable iron in accordance with Fed. Spec. WW-U-531, Type B, zinc-coated. Unions on tubing 2 inches in diameter and smaller shall be composition B, conforming to Fed. Spec. WW-U-516. Flanged connections on water piping 2-1/2 inches in diameter and larger shall conform to Fed. Spec. WW-F-406, and shall be bronze, 150-pound class on copper tubing and 125-pound class on ferrous pipe. Gaskets for flanges shall be fiber, plastic, or other synthetic material suitable for water service. Unions and flanges shall not be concealed in walls, ceilings, or partitions. The dielectric unions shall meet the dimensional requirements and tensile strength of pipe unions in accordance with Fed. Spec. WW-U-531. The dielectric unions or flanges shall be suitable for the required operating pressures and temperature conditions. The dielectric unions shall have metal connections on both ends of union. The ends of the unions shall be threaded or soldered to match adjacent piping. The metal parts of the dielectric union or flange shall be separated to prevent current flow between the dissimilar metals.

17. WALL HYDRANTS AND LAWN FAUCETS shall be installed on walls at points indicated, 24 inches above finished grade, at a uniform level on the same face of the building where the finished grade permits, and on porches above the finished floor.

17.1 Wall Hydrants. Wall hydrants shall have a nickel-brass or nickel-bronze wall plate or flange with nozzle and detachable key handle. A brass or bronze operating rod within a galvanized iron casing shall be of sufficient length to extend through the wall and place the valve inside the building so that the portion of hydrant between the outlet and valve is self-draining. A brass or bronze valve with coupling and union elbow having metal-to-metal seat shall be provided. Valve rod and seat washer shall be removable through the face of the hydrant. The hydrant shall have a 3/4-inch exposed hose thread on spout and 3/4-inch male pipe thread on inlet.

17.2 Lawn Faucets. Lawn faucets shall be brass with either straight or angle body and shall be of the compression type. Body flange shall be provided with internal pipe thread to suit 1/2- or 3/4-inch pipe as required. Body shall be suitable for wrench grip. Faucet spout shall have 3/4-inch exposed hose threads. Metal wheel handle shall be securely attached to stem.

18. VACUUM BREAKERS OR BACKFLOW PREVENTERS FOR FAUCETS AND FIXTURES shall be tested and approved in conformance with ANSI A112.1.1. They shall be installed as required by ASME A40.8. Vacuum breakers and backflow preventers shall have brass or bronze body with bronze or corrosion resisting steel parts and suitable disks. The breakers or preventers shall be suitable for hot or cold water service as required.

19. TYPES OF FIXTURES AND FIXTURE TRIMMINGS specified herein shall be furnished and installed complete with all trimmings and fittings, unless otherwise specified under the item. The item numbers correspond with the "P" numbers shown at the plumbing fixtures on the drawings.

19.1 General Requirements. Plumbing fixtures shall conform to Table 1, PLUMBING FIXTURE SCHEDULE, and Fed. Spec. WW-P-541, unless otherwise indicated. Fixtures and trimmings not covered by Fed. Spec. WW-P-541 shall be considered special, but shall be of equal quality and material. Generally, all fixtures except water closets and urinals shall have the water supply above the rim. Fixtures with the supply discharge below the rim shall be equipped with backflow preventers. Angle stops; straight stops; stops integral with the faucets; or concealed type of lock-shield, loose-key pattern stops for supplies shall be furnished and installed with fixtures. Piping connections from the shutoff or stop valve to the fixture shall be chrome-plated brass pipe or chrome-plated copper tubing. Exposed traps and supply pipes for all fixtures and equipment shall be connected to the rough piping systems at the wall, unless otherwise specified under the item. Floor and wall escutcheons shall be as specified above. Exposed fixture trimmings and fittings shall be chromium-plated, chromium-nickel-plated, or nickel-plated brass with polished, bright surfaces. Plumbing fixtures and accessories shall be installed within the spaces shown. The Contractor shall submit drawings for approval indicating the fixture dimensions and overall clearance around fixture and accessories to assure a suitable installation. Internal parts of flush valves, pop-up stopper of lavatory waste drains may be acetal resin, fluorocarbon, nylon, acrylonitrile-butadiene-styrene (ABS) or other suitable plastic material provided that the plastic material has provided satisfactory service under actual commercial or industrial operating conditions for a period of 2 years. Plastic in content with hot water shall be suitable for 180 degrees F. water temperature.

19.2 Fixture Connections. Where space conditions will not permit standard fittings in conjunction with the cast iron floor flange, special short-radius fittings shall be provided. Connections between earthenware fixtures and flanges on soil pipe shall be made absolutely gastight and watertight with a closet-setting compound or with a neoprene gasket and seal. Use of natural-rubber gaskets or putty will not be permitted for these connections. Bolts shall be not less than 1/4-inch diameter and shall be equipped with chromium-plated nuts and washers. Fixtures with outlet flanges shall be set the proper distance from floor or wall to make a first-class joint with the closet-setting compound or gasket and fixture used.

19.3 Flush Valves. Flush valves shall be of the non-hold-open type and concealed. Flush valve operator handles shall be installed 39 inches above the floor and be securely anchored to prevent movement. Stops for water closet seat shall be concealed behind the wall.

19.4 Traps. Unless otherwise specified herein, traps shall be copper alloy adjustable tube type with slip joint inlet and swivel. Trap shall be without a cleanout. Tube shall be not less than 20 gage copper alloy having wall 0.032 inch thick within commercial tolerances, except on the outside of bends where the thickness may be reduced slightly in manufacture by usual commercial methods. Inlet shall have rubber washer and copper alloy nut for slip joint above the discharge level; swivel joint shall be below the discharge level and be of metal-to-metal, or metal-to-plastic type as requied for specific application. Nuts shall have flats for wrench grip. Outlet shall have internal pipe thread, except that when required for specific application, the outlet shall have socket for solder joint connections. The depth of the water seal shall be not less than 2 inches. The interior diameter shall be not than 1/8-inch over or under the nominal size, and interior surfaces shall be reasonably smooth throughout. A copper alloy "P" trap assembly consisting of an adjustable "P" trap and waste tubing to wall with escutcheon may be provided for lavatories. The assembly whall be a standard manufactured unit and may have a rubber gasketed swivel joint.

19.5 Height of Fixture Rims Above Floor. Unless otherwise specified herein, height of Fixture Rims above floor shall be as indicated on the drawing. Paraplegic mounting height shall be as indicated with rims 34 inches above finished floor. Wall-hung drinking fountains shall be installed with rim 39 inches above floor. Wall-hung service sinks shall be mounted with rims 28 inches above the floor.

19.6 Fixtures. Fixtures shall be indicated in Table 1 below.

PLUMBING FIXTURE SCHEDULE

TABLE 1*

(Reference WW-P-541)

Fixture Number	Item Name	Classification	Requirements
P-1	Water closet (wall mounted)	WW-P-541/1A Part A Type II Part F Type II	Super Secur Ware WALBOL Model CS-300 or approved equal. Water closet shall be made of cast aluminum alloy conforming to ASTM B108 alloy 356F. Water closet shall be either blowout jet or siphon jet operation with integral flushing rim seat and rear discharge. Water closet shall have either top or rear inlet spud for water connection. Elongated trapway shall be capable of passing 2-1/2" solid ball. Water closet shall be capable of wall mounting. Color of finish coat shall be white. Chair carrier shall be provided for mounting.
	Flushometer	WW-P-541/1A Part E (Flushometer) Type I Style 2 Model C	Sloan Valve Model Royal or approved equal. Flushometer shall be concealed mounted with the oscillating type handle exposed.
P-2	Water closet		Same as P-1 except for mounting height.
P-3	Urinal (wall mounted)	WW-P-541/2A Part A Type III (special)	Super Secur Ware ALUR Model CS-600 or approved equal. Urinal shall be projecting type and shall be made of cast aluminum alloy conforming to ASTM B108 alloy 356F. Urinal shall be either blowout jet or siphon jet operation with flushing rim and rear discharge. Urinal shall have either top or rear inlet spud for water connection. Urinal shall be capable of wall mounting. Color of finish coat shall be white. Chair carrier shall be provided for mounting urinal to wall.
	Flushometer	WW-P-541/2A Part B Type I	Sloan Valve Model Royal or approved equal. Flushometer shall be concealed mounted with the oscillating type handle exposed.
P-4	Lavatory (wall mounted)	WW-P-541/4A Part A Type VII (special) Part D Type I Part F Type II	Super Secur Ware ALCO Model CS-75 or approved equal. Lavatory shall be made of cast aluminum alloy conforming to ASTM B108 alloy 356F. Lavatory shall be straight back type and have provision for mounting 4" center set faucet with pop-up waste assembly. Chair carrier shall be provided for mounting lavatory. Finish coat shall be white.
P-5	Center-set faucet pop-up and Areator	WW-P-541/4A Part C Type V (special) Part E Type I or II Part F Type II	T & S Brass and Bronze Works, Inc. Model B-830 or approved equal. 4" Centerset Lavatory Faucet with pop-up shall have slow closing hot and cold water valve with vandal resistant bonnet. Pop-up waste has 1-1/4 inch diameter tail piece. Stop and trap shall be concealed. Exposed drain shall be insulated to protect paraplegic.
P-6	Concealed Bypass mixing valve for shower	WW-P-541/7B Part E Type S (special)	T & S Brass and Bronze Works, Inc. Model B-1035 or approved equal. 8" center to center concealed bypass mixing valve with 1/2" IPS female outlet and 1/2" IPS female union.

	Shower head	WW-P-541/7B Part C Type III (special)	T & S Brass and Bronze Works, Inc. Model B-1090 or approved equal. Shower head, shower head arm, and wall flange assembly. Shower head shall have capability for adjusting flow from needle point to full flood. Shower head to shower head arm shall have ball joint swivel connection. Wall flange shall have 1/2" IPS inlet.
P-7	Drinking Fountain (wall mounted)	WW-P-541/6A Type III (special)	Super Secur Ware SANI-SIP Model CS-800 or approved equal. Drinking Fountain bowl shall be fabricated from aluminum alloy conforming to ASTM B108 alloy 356. Bubbler shall be chrome-plated and be of sanitary design incorporating antisquirt angled orifice and protective mouth-guard hood. Bubbler shall be vandal proof mounted. Valve shall be concealed pushbutton, self closing type. Service cover plate shall have vandal proof fastener design. Vandal proof mounting bolts shall be supplied by the manufacturer to wall mount drinking fountain. Finish coat shall be white. Chair carrier shall be provided for mounting.
P-8	Mop Service Basin with strainer	WW-P-541/5A Part A Type VII Part C Type I Part D Type I	Powers-Fiat Molded-stone Model MSB-2424 or approved equal. Mop service basin shall be molded using matched dies and under heat and pressure, resulting in a one-piece, homogeneous product. The basin shall have minimum of 10" high wall with 1" wide shoulder. The basin drain body shall be cast brass, cadimium plated complete with cast brass locknut, gaskets, and washer. A combination dome strainer and lint basket shall be made of No. 302 16 Ga stainless steel and be provided with stainless steel screws for installation. The basin shall be provided with Vinyl Bumperguard on the 1" wide shoulder.
	Service Faucet assembly	WW-P-541/5A Part B Type VI (special)	Powers-Fiat Model No. 830-AA (Hose Faucet) or approved equal. The service faucet shall be chrome-plated with vacuum breaker, integral stops, adjustable wall brace, pail hook and 3/4" hose thread on spout. Body inlet 8" center to center. Center of spout outlet from back of wall flange distance shall be 7 to 9 inches. Finish color shall be white with black accent.
	Hose and Hose Bracket		Power-Fiat Model No. 832-AA (Hose and Hose Bracket) or approved equal. The hose shall be 30" long flexible heavy duty 5/8" inside diameter rubber hose, cloth reinforced, with 3/4" chrome coupling on one end. Hose bracket shall be fabricated from 18 gage No. 302 stainless steel (No. 4 finish) with rubber grip to hold hose.
	Mop Hanger		Powers-Fiat Model No. 889-CC (Mop Hanger) or approved equal. The mop hanger shall be fabricated from 18 gage No. 302 stainless steel (No. 4 finish) and shall have three (3) rubber tool grips.

20. WATER HEATERS.

20.1 Electric Water Heaters. Heaters shall conform to Fed. Spec. W-H-196, Type II or IV, Series 1 or Series 2. The size, capacity, voltage, and combined wattage of heating elements shall be not less than indicated. Wiring shall be so arranged that, when required by thermostats, both heating elements will operate simultaneously. Heat traps shall be metallic. Electric water heaters shall be provided with a vacuum relief valve on the cold water supply line at an elevation above the top of the tank.

21. RELIEF VALVES. Temperature and pressure-relief valves shall conform to Mil. Spec. MIL-V-13612. Type I, Class 1, valves of size and set pressure as applicable, shall be installed when the heat input is less than 200,000 Btu per hour, and when the storage is less than 120 gallons. If either or both of the specified conditions are reached or exceeded, Type II and Type III valves, size and set pressure as applicable, shall be installed. Vacuum-relief valves shall be installed on each cold-water branch connection to water heaters as specified above.

22. INSULATION shall be as specified in section: THERMAL INSULATION FOR MECHANICAL SYSTEMS.

23. PIPE SLEEVES, HANGERS, AND FIXTURE SUPPORTS shall be furnished and set, and the Contractor shall be responsible for their proper and permanent location.

23.1 Pipe Sleeves. Pipes passing through concrete or masonry walls or concrete floors or roofs shall be provided with pipe sleeves fitted into place at the time of construction. Sleeves shall not be required for cast iron soil pipe passing through concrete slab on grade except where penetrating a membrane waterproof floor or for supply and waste piping through the wall supporting the fixture. The space between the pipe and wall shall be calked with sealant conforming to Fed. Spec. TT-C-598. Sleeves shall not be installed in structural members except where indicated or approved. All rectangular and square openings shall be as detailed on the drawing. Each sleeve shall extend through its respective wall, floor, or roof, and shall be cut flush with each surface except where clamping flanges are used. Unless otherwise indicated, sleeves shall be of such size as to provide a minimum of 1/4-inch all-around clearance between bare pipe and sleeves or between jacket over insulation and sleeves. Sleeves in bearing walls shall be steel pipe or cast iron pipe. Sleeves for membrane waterproof floors shall be steel pipe, cast iron sleeve, plastic pipe or approved pipe. Membrane clamping device shall be provided on pipe sleeves for waterproof floors. Sleeves in nonbearing walls, floors, or ceilings may be steel pipe, cast iron pipe, galvanized sheet metal with lock-type longitudinal seam, or moisture-resistant fiber or plastic. Except as specified below, the annular space between pipe and sleeve or between jacket over insulation and sleeve shall be sealed as indicated and specified in section: CALKING AND SEALANTS. The annular space between pipe and sleeve or between jacket over insulation and sleeve will not be sealed for interior walls or pipe chase areas which are not designated as fire rated.

23.1.1 Pipes passing through roof or floor waterproofing membrane shall be installed through a 4-pound lead flashing or a 16-ounce copper flashing, each within an integral skirt or flange. Flashings shall be suitably formed, and the skirt or flange shall extend not less than 8 inches from the pipe and shall set over the roof or floor membrane in a solid coating of bituminous cement. The flashing shall extend up the pipe a minimum of 10 inches. For cleanouts the flashing shall be turned down into the hub and calked after placing the ferrule. The annular space between the flashing and the bare pipe or between the flashing and the metal-jacket-covered insulation shall be sealed as indicated. Flashing for dry vents shall be turned down into the pipe to form a waterproof joint. At the Contractor's option, pipes up to and including 10 inches in diameter passing through roof or floor waterproofing membrane may be installed through a cast iron sleeve with calking recess, anchor lugs, flashing-clamp device, and pressure ring with brass bolts. Flashing shield shall be fitted into the sleeve clamping device.

23.1.2 As an alternate to turning the flashing down into a dry vent pipe or calking and sealing the annular space between the pipe and flashing or metal-jacket-covered insulation and flashing, counterflashing may be accomplished by utilizing:

(a) A standard roof coupling for threaded pipe up to 6 inches in diameter.

(b) A tack-welded or banded-metal rain shield around the pipe and sealed as indicated.

23.1.3 Pipes passing through wall waterproofing membrane shall be sleeved as described above. In addition, a waterproofing clamping flange shall be installed as indicated.

23.2 Pipe Hangers, Inserts, and Supports. Hangers, inserts, and supports shall conform to Fed. Spec. WW-H-171 except as specified below. Inserts shall be Types 18 and 19 and shall be installed in correct locations before the concrete is poured. Beam clamps shall be Types 20, 21, 22, 23, 28, 29, 30, and 31. A retainer shall be provided with Type 23. Angle iron or channel clamps shall be Type 20 with a malleable iron heel plate added. For wood construction, joists shall be bridged where necessary, using lag screws of the same diameter as hanger rods for hanger fasteners. Pipe hangers and supports for acid-resisting pipe shall be equal to the hangers and supports specified for metal pipe, and when recommended by the manufacturer, padding shall be provided to protect the pipe and fittings. Adapter fittings used to connect acid-resisting pipe or fittings to metal shall be rigidly supported. For piping up to and including 1-1/4 inch IPS, 3/4-inch-wide, 18-gage-minimum steel strap-type, ring-type or molded thermoplastic hangers may be used and shall be secured by screw fasteners. Hangers in contact with uninsulated copper tubing or brass pipe shall be electrolytically coated and shall be sized to suit the outside diameter of the pipe. Hangers for insulated pipe shall have a diameter large enough to include the insulation. The location of hangers and supports

shall be coordinated with the structural work to assure that the structural members will support the intended load. In lieu of separate hangers or supports, the Contractor shall submit for approval a detailed drawing of the type of hanger or support proposed to furnish for hanging and supporting multiple pipes.

23.2.1 Horizontal Piping. Hangers and supports shall be installed at intervals specified below, at locations not more than 3 feet from the ends of each runout and not over one foot from each change in direction of piping. Hangers shall be Type 1, 9, 10, 11, or 12 and shall be adjustable or provided with turnbuckles Type 13 or 15. Type 6 hangers may be used to support pipes from toilet rooms to main stack when space does not permit the use of turnbuckles or adjustable clevis-type hangers. Brackets for support of piping at walls shall be Type 32, 33, 34, or 35. Metallic pipes supported on beams or brackets shall be provided with a graphite slide plate and cradle having a minimum thickness of 1/2 inch. The graphite slide plate shall be cemented to the beam or bracket and the graphite cradle shall be cemented or strapped to the pipe. Hangers and supports shall be spaced as follows.

23.2.1.1 Cast iron soil pipe shall be supported near each hub or hubless pipe joint and at multiple fittings as required.

23.2.1.2 Metal pipe and tube and tubing shall be supported as follows unless otherwise indicated by the manufacturer and approved.

Nominal Pipe Size, inches	1/2 to 1	1-1/4	1-1/2	2-1/2 2		3-1/2 3		4	5	6	8	10	12
Max. Span ft.	7	8	9	10	11	12	13	14	16	17	19	22	23

Nominal Tubing Size, inches	1/2	3/4	1	1-1/4	1-1/2	2	2-1/2	3	4 or over
Max. Span ft.	5	6	6	7	8	9	10	11	12

23.2.1.3 Underground piping shall be laid on a firm bed for its entire length, except where support is otherwise provided.

23.2.2 Vertical Piping. Pipe clamps shall be Type 8 for floor supports and Type 24 anchors at other locations. Supports shall be spaced as follows.

23.2.2.1 Cast iron, steel pipe, copper tube and tubing shall be supported at each floor, and at intervals of not more than 15 feet, not more than 8 feet from end of riser, and near vent terminations as approved. Where supports are provided on intermediate floors, not in excess of 15 feet spacing between floors, no additional supports are required other than those specified for end of riser and vent terminations. Support of piping at the floor shall not be provided for slab on grade floors.

23.3 Fixture Supports. Wall-hung fixture hanger plates, supports or brackets or mounting lugs shall be fastened to the wall by through bolts where appearance of the bolts is not objectionable. Exposed bolt heads in finished areas shall be hexagonal and painted. Exposed nuts shall be chromium-plated hexagonal cap nuts. Washers shall be painted or chromium-plated to match bolt heads or nuts.

23.3.1 For Solid Masonry. Where through bolting is objectionable, fixture hanger plates, supports or brackets or mounting lugs shall be fastened with 1/4-inch minimum machine-bolt expansion shields or 1/4-inch minimum stud-type expansion bolts.

23.3.2 For cellular-masonry construction, fixture hanger plates, supports or brackets or mounting lugs shall be fastened with 1/4-inch minimum through bolts. Lavatories mounted on pipe chases shall be installed with one or two steel backup plates as required. The backup plates shall be 1/8-inch thick, 4 inches minimum width, and not less than the width of the fixture. Urinals mounted on pipe chases shall be installed with one or two steel backup plates as required, 1/8-inch thick, 4 inches minimum width, and not less than the width of the fixture. Backup plates shall be suspended on the inner side of the chase by two 1/8-inch thick metal clips placed in the mortar joint. The metal clips and through bolts shall be tack-welded to each plate. The plates shall be installed horizontally and fastened to the top and bottom of the lavatory or urinal as required.

23.3.3 For steel-stud frame partitions, fixture hanger plates, supports or brackets or mounting lugs shall be through bolted to steel-channel crosspieces not less than 1-1/2 inches wide adequately anchored to studs. Bolt heads shall be welded to channel web. Where 25 gage steel framing is used for wallboard finish, if fixture weight does not exceed 50 pounds, crosspieces may be of stud material with nested wood backing for screw attachment.

24. IDENTIFICATION SYSTEMS shall be provided as below specified and approved by the Contracting Officer.

24.1 Color Coding. Color coding for piping identification is specified in section: PAINTING, GENERAL.

25. FLOOR, WALL, AND CEILING ESCUTCHEONS. Escutcheons shall be provided at all finished surfaces where exposed piping, bare or insulated, passes through floors, walls, or ceilings, except in boiler, utility, or equipment rooms. Escutcheons shall be fastened securely to pipe or pipe covering and shall be corrosion resisting steel, chromium-plated zinc alloy or chromium-plated copper alloy, either one-piece or split-pattern, held in place by internal spring tension or setscrew.

26. PAINTING required for pipes, hangers, supports, and other iron work in concealed spaces and painting of exposed items is specified in section: PAINTING, GENERAL.

27. INSPECTION, TESTS, AND STERILIZATION.

27.1 Methods of Sampling, Inspecting, and Testing Fixtures. Methods shall conform to Fed. Spec. WW-P-541.

27.2 Tests for Plumbing Systems. Soil, waste, vent, interior drainspout drain and water piping shall be tested by the Contractor and approved before acceptance. Underground soil and waste and water piping shall be tested before backfilling. Equipment required for test shall be furnished by the Contractor at no additional cost to the Government.

27.2.1 Drainage and Venting System Piping. Piping shall be tested with water or air before the fixtures are installed. After the plumbing fixtures have been set and their traps filled with water, the entire drainage and venting system shall be submitted to a final test with smoke or peppermint.

27.2.1.1 Water Test. Water test shall be applied to the drainage and venting system either in its entirety or in sections. If the entire system is tested, all openings in the pipes shall be tightly closed except the highest opening, and the system shall be filled with water to the point of overflow. If the system is tested in sections, each opening except the highest opening of the section under test shall be tightly plugged, and each section shall be filled with water and tested with at least a 10-foot head of water. In testing successive sections, at least the upper 10 feet of the next preceding section shall be tested so that each joint or pipe in the building except the uppermost 10 feet of the system has been submitted to a test of at least a 10-foot head of water. The water shall be kept in the system, or in the portion under test, for at least 15 minutes before the inspection starts; the system shall then be tight at all joints.

27.2.1.2 Air Test. If tests are made with air, a pressure of not less than 5 psi shall be applied with a force pump and maintained at least 15 minutes without leakage. A mercury-column gage shall be used in making the air test.

27.2.1.3 Final Test. When the smoke test is employed, the smoke shall be produced by a smoke machine, and a pressure equal to 1-inch water column shall be maintained for 15 minutes before inspection starts. When the peppermint test is used, 2 ounces of peppermint shall be introduced into each line or stack.

27.2.2 Water System. When the roughing-in is completed and before fixtures are set, the entire hot- and cold-water piping systems shall be tested at a hydrostatic pressure of not less than 100 lb/in^2g, and proved tight at this pressure for not less than 30 minutes in order to permit inspection of all joints. Where a portion of the water-piping system is to be concealed before completion, this portion shall be tested separately as specified for the entire system.

27.2.3 Defective Work. If inspection of test shows defects, such defective work or material shall be replaced or repaired as necessary and inspection and tests shall be repeated. Repairs to piping shall be made with new materials. No calking of screwed joints or holes will be acceptable.

27.2.4 Cleaning and Adjusting. Equipment, pipes, valves, fittings, and fixtures shall be cleaned of grease, metal cuttings, and sludge that may have accumulated from operation of the system during the test. Any stoppage, discoloration, or other damage to the finish, furnishings, or parts of the building, due to the Contractor's failure to clean the piping system properly, shall be repaired by the Contractor. When the work is complete, the hot-water system shall be adjusted for uniform circulation. Flush valves and automatic control devices shall be adjusted for proper operation.

27.2.5 Operational Test. Upon completion and prior to acceptance of the installation the Contractor shall subject the plumbing system to operating tests to demonstrate satisfactory functional and operational efficiency. Such operating tests shall cover a period of not less than 8 hours for each system and shall include the following information in a report with conclusion as to the adequacy of the system.

a. Time, date, and duration of test.

b. Water pressures at the most remote and the highest fixtures.

c. Operation of all fixtures and fixture trim.

d. Operation of all valves, hydrants, and faucets.

e. Pump suction and discharge pressures.

f. Temperature of domestic hot water supply and recovery time for water heater.

g. Operation of all floor and roof drains by flooding with water.

h. Operation of vacuum breaker and backflow preventers.

All indicating instruments shall be read at 1/2 hour intervals unless otherwise directed by the Contracting Officer. The report of the test shall be supplied in quadruplicate to the Contracting Officer. The Contractor shall furnish all instruments, test equipment, and test personnel required for the tests; the Government will furnish the necessary fuel, water, and electricity.

27.3 Sterilization. After pressure tests have been made, the entire domestic water-distribution system shall be thoroughly flushed with water until all entrained dirt and mud have been removed, and shall be sterilized by chlorinating material. The chlorinating material shall be either liquid chlorine conforming to Fed. Spec. BB-C-120 or hypochlorite conforming to Fed. Spec. O-C-114 or Fed. Spec. O-S-602, Grade 1 or 2. The chlorinating material shall provide a dosage of not less than 50 parts per million and shall be introduced into the system in an approved manner. The treated water shall be retained in the pipe long enough to destroy all non-spore-forming bacteria. Except where a shorter period is approved, the retention time shall be at least 24 hours and shall produce not less than 10 p.p.m. of chlorine at the extreme end of the system at the end of the retention period. All valves in the system being sterilized shall be opened and closed several times during the contact period. The system shall then be flushed with clean water until the residual chlorine is reduced to less than 1.0 p.p.m. During the flushing period all valves and faucets shall be opened and closed several times. From several points in the system the Contracting Officer will take samples of water in properly sterilized containers for bacterial examination. The sterilizing shall be repeated until tests indicate the absence of pollution for at least two full days. The system will not be accepted until satisfactory bacteriological results have been obtained.

28. GUARANTEE FOR WATER HEATERS, ELECTRIC. The Contractor shall furnish the Contracting Officer a warranty issued by the manufacturer of the water heaters, which warranty shall inure to the Government. Said warranty shall contain the following terms and conditions: Any replacement under this warranty shall include free delivery to the project location. Said warranty is independent of and in addition to any and all other warranties and guarantees made by the Contractor under this contract and this warranty shall not relieve the Contractor of performance of any other warranties or guaranties made under this contract. The manufacturer shall warrant the complete heater assemblies to be free of defects as regards both materials and workmanship under normal use in service and shall repair or replace without installing, free of charge, all parts of heaters which may develop defects during the first year beginning with the beneficial use after acceptance of the water heater or heaters. In addition, the manufacturer shall agree that if any original heater tank becomes defective or inoperative during the first 3 years in use, a complete new heater assembly or equivalent model will be supplied at no cost or shipping expenses, without installing. Installation costs are not included.

29. ACCESS PANELS shall be provided for all concealed valves, controls, dampers, or any item requiring inspection or maintenance. Access panels shall be of sufficient size and so located that the concealed items may be serviced and maintained or completely removed and replaced. Access panels shall be as specified in section: MISCELLANEOUS METAL.

* * * * *

SECTION 14R

BUILT-UP ROOFING

Index

1. Applicable Publications
2. General
3. Materials
4. Preparation
5. Standard Roofing Specifications
6. Optional Roofing Specifications
7. Application of Roofing
8. Flashings
9. Roof Cutout Samples
10. Surfacing

1. APPLICABLE PUBLICATIONS. The following publications of the issues listed below, but referred to thereafter by basic designation only, form a part of this specification to the extent indicated by the references thereto.

1.1 Federal Specifications.

FF-B-575C	Bolts, Hexagon and Square
FF-N-836D & Am-1	Nut: Square, Hexagon, Cap, Slotted, Castle, Knurled, Welding and Single Ball Seat
SS-C-153B	Cement, Bituminous, Plastic
SS-R-620B	Roofing Felt, Glass Fiber, Asphalt Coated (for Flashing and Roofing)
LLL-I-535a	Insulation Board, Thermal and Insulation Block, Thermal

1.2 American Society for Testing and Materials (ASTM) Publications.

D 41-73	Primer for Use with Asphalt in Dampproofing and Waterproofing
D 224-68	Asphalt Roll Roofing Surfaced with Powdered Talc or Mica
D 226-68	Asphalt-Saturated Roofing Felt for Use in Waterproofing and in Constructing Built-Up Roofs
D 312-71	Asphalt for Use in Constructing Built-Up Roof Coverings
D 1863-64	Mineral Aggregate for Use on Built-Up Roofs

2. GENERAL. Asphalt built-up roofing shall be applied to the roof surfaces indicated. Bituminous-plastic-type flashings installed in accordance with these specifications shall be used throughout unless otherwise specified or indicated. Metal flashings are specified in section: SHEET METALWORK. Asphalt shall be used with asphalt-saturated felts.

3. MATERIALS. The following materials shall conform to the respective specifications and other requirements hereinafter specified. Roofing materials shall be stored in an approved manner and shall be protected from contact with soil and exposure to the elements. Immediately before laying, felt rolls and roll roofing shall be stacked on end and stored for 24 hours in an area maintained at no lower temperature than 50 degrees F.

3.1 Asphalt Primer. ASTM Specifications D 41.

3.2 Bituminous.

3.2.1 Asphalt. ASTM Specification D 312, Type II.

3.2.2 Steep Asphalt. ASTM Specification D 312, type III.

3.3 Cants shall be made from treated wood or treated fiberboard and shall reduce the angle covered into two equal angles. Treated wood shall be of water-borne preservative-treated material as specified in section: ROUGH CARPENTRY. Fiberboard shall conform to Federal Specification LLL-I-535, class C treated for moisture resistance by integral treatment with wax or other sizes or with bituminous impregnation.

3.4 Felt shall be the bituminous saturated type and shall conform to the following requirements.

3.4.1 Organic-Fiber, Asphalt-Saturated Felt. ASTM Specifications D 22, 15-lb type.

3.4.2 Glass-Fiber, Asphalt-Saturated Felts.

3.4.2.1 Roofing Felt. Federal Specification SS-R-620, type I.

3.4.2.2 Combination Base Sheet. Federal Specification SS-R-620, type IV.

3.5 Nails, Fasteners, and Anchors.

3.5.1 Roofing Nails shall be nonferrous or zinc-coated steel, with shank not greater than 10 gage (0.135 inch) not less than 12 gage (0.105 inch) and head not less than 3/8 inch diameter. Lengths shall be sufficient to penetrate into the wood deck or wood nailer for not less than 3/4 inch.

3.5.2 Fasteners. Self-clinching type with a minimum holding power of 20 pounds per fastener when driven.

3.5.3 Powder-Driven Fasteners may be used only when approved in writing.

3.5.4 Bolts and Nuts. Federal Specifications FF-B-575 and FF-N-836, types, styles, and sizes as shown or as required for the application.

3.5.5 Metal Disks. Flat and not less than one-inch diameter.

3.6 Bituminous Cement. Federal Specification SS-C-153, type I with asphalt-saturated felts and type II with coal-tar-saturated felts.

3.7 Roll Roofing.

3.7.1 Mineral-Surfaced Roofing. Federal Specifications SS-R-630, class 1, 2, or 3, not less than 2-inch selvage.

3.7.2 Smooth-Surfaced Roofing. ASTM Specification D 224, 55-pound grade, furnished without nails and cement.

3.8 Sheathing Paper. Rosin-sized, weighing not less than 5 pounds per 100 square feet, or unsaturated felt weighing approximately 7-1/2 pounds per 100 square feet.

3.9 Surfacing Materials. Gravel or slag aggregate shall conform to ASTM Specification D 1836. In lieu of gravel or blast-furnace slag, one or more of the following materials may be used when blended to the grading requirements of ASTM Specification D 1863: marble; expanded clay; expanded slag; expanded shale of at least 55 pcf density and shall be light colored, opaque, surface dry and free from dirt or other foreign material. Testing of the surfacing material shall be the responsibility of the Contractor.

4. PREPARATION. The entire roof-deck construction of any bay of the building shall be completed and the ambient temperature shall be not lower than 40 degrees F. before roofing work is begun thereon. The surface on which the roofing or flashings are to be applied shall be free from ice, frost, moisture, dirt, projections, and foreign materials, and shall be smooth and firm. Vents and other items penetrating the roof shall be secured in position and properly prepared for flashing. Surfaces shall be inspected and approved immediately prior to application of roofing and flashings.

5. STANDARD ROOFING SPECIFICATIONS. The following standard specifications establish the minimum requirements for the construction and application of bituminous aggregate-surfaced, built-up roofing.

5.1 Type 5AWS, aggregate-surfaced, asphalt, built-up, 5-ply roofing on wood surfaces. The built-up roofing shall consist of not less than the following quantities for each square of roofing.

	Pounds
Sheathing paper or unsaturated felt,	5
1 ply smooth-surface roll roofing base sheet	46
4 plies asphalt-saturated organic felt	52
4 moppings asphalt 80	
1 flood coat asphalt	60
Surfacing:	
roofing gravel	400
roofing slag	300
optional materials	300

Over wood surfaces, one thickness of sheathing paper or unsaturated felt shall be laid with joints lapped at least one inch and nailed sufficiently to hold the paper or felt in place until roofing felt is applied. Over sheathing paper or unsaturated felt, 1 ply of smooth-surface roll roofing, lapped in accordance with table I, shall be laid, without mopping, at right angles to the direction of roof slope, and fastened in accordance with table II. Four plies of asphalt-saturated felt shall be immediately laid shingle-fashion in hot solid moppings of asphalt. Each ply shall be lapped as specified in table I and fastened in accordance with table II. The flashing shall be installed and the flood coat and surfacing applied.

6. OPTIONAL ROOFING SPECIFICATIONS. In lieu of the felt roofs, types 5AWS specified hereinbefore, glass-fiber roofs designated as type 4AWGS for use over wood and other nailable decks may be applied. The glass-fiber roof shall be applied as specified herein for felt roofs with the following exceptions.

6.1 Type 4AWGS Roof. Over wood decks, the built-up roofing shall consist of not less than the following quantities for each square of roofing.

	Pounds
1 ply sheathing paper or unsaturated felt,	5
1 ply combination glass-fiber base sheet	12.3
3 plies glass-fiber roof felt	18.6
3 moppings hot asphalt at 30 pounds	90
1 flood coat asphalt	60
Surfacing:	
roof gravel	400
roofing slag	300
optional materials	300

Over wood surfaces one thickness of sheathing paper or unsaturated felt shall be applied with joints lapped at least one inch and nailed sufficiently to hold the paper or felt in place until the combination base sheet is applied. Over the sheathing paper or unsaturated felt one layer of combination glass-fiber base sheet shall be laid dry, followed by 3 plies of asphalt-coated glass-fiber felt laid shingle-fashion in full mop coats of asphalt using not less than 30 pounds per square per mopping. The glass-fiber felt sheets and base sheet shall be lapped and fastened as specified for smooth-surfaced roll roofing and asphalt felts in tables I and II. The flashings shall be installed and the flood coat and surfacing applied.

7. APPLICATION OF ROOFING. Asphalt shall not be heated above 450 degrees F. Kettlemen shall be in attendance at all times during the heating to insure that the maximum temperature specified is not exceeded. Asphalt shall be hot when applied, and layers of roofing shall be laid free of wrinkles or buckles at right angles to the slope of the deck, immediately behind the mop. Layers of organic-fibered roofing shall be laid in not less than 20 pounds of asphalt per square for solid mopping and not less than 15 pounds of asphalt per square for channel or spot mopping. Bitumen shall uniformly cover all roof areas to be mopped to provide effective bond. Asphalt primer, for masonry surfaces to receive asphalt products, shall be applied at a rate of not less than one gallon per square. Each course of roofing felts and base sheet, in addition to being mopped in hot bitumen, shall be lapped as specified in table I and nailed as specified in table II. Where roofing is applied to the deck and requires several working days for completion, base sheet application may be completed over the surface area under the following three conditions:

(a) Base sheet laps shall be waterproofed with a solid application of hot bitumen.

(b) Remaining plies of roofing shall be installed so that base sheet is not left exposed to the weather for longer than one week.

(c) This method of application shall be proposed in writing to the Contracting Officer in advance of the actual work and include a detailed schedule of the roofing Contractor's operations. This method of application shall not be used in lieu of the continuous operation without the prior approval of the Contracting Officer. The surface of the felts shall be carefully broomed-in with an 18- or 20-inch-wide, soft-fiber-type floor broom to obtain complete adhesion between plies and to eliminate air pockets. The method of mopping a half-sheet width and turning the sheet back to mop under the other half shall not be used. Workmen shall not walk on mopped surfaces when the bitumen is sticky. Each layer of roofing felt shall be carried up abutting vertical surfaces at least 4 inches, or to the

top of the cant strip. At eaves and rakes, 2 layers of roofing felts shall be applied beneath the roll roofing with not less than 9-inch mopping on roof decks for uninsulated decks and turned back 9 inches and mopped over the top roof ply. At eaves and rakes, the bottom layer of felt shall be applied in a 9-inch-wide strip of bituminous cement, except that bottom layer of felt shall be nailed in lieu of applying with bitumen when roll roofing is applied without bitumen. The gravel stop, specified in section: SHEET METALWORK, shall be embedded in bituminous cement and nailed on top of the envelope formed by the felt turnback as specified in section: SHEET METALWORK.

7.1 Laping and Fastening Felts. Roofing felts and roll roofing shall be laid with not less than the laps shown in table I. In addition to bituminous moppings, roofing felts and roll roofing shall be secured to roof deck surfaces of the various slopes in accordance with table II.

7.2 Nails and Fasteners for securing roofing shall be of the following types and shall be flush-driven through flat metal disks of not less than one-inch diameter. Metal disks may be omitted where heads of fasteners are equivalent in size to the one-inch-diameter disks. See table on nailing of built-up roofing.

7.2.1 Direct Application to Decks.

7.2.1.1 Wood. Use roofing nails.

7.3 Mechanical Application. When mechanical roofing-application equipment is used, planks, plywood, or other approved protection shall be placed over the roofing. The traffic shall be confined to the protected area. Felt machines shall contain a sufficient quantity of bitumen at the proper temperature to insure no holidays in the bitumen.

8. FLASHINGS shall be provided in the angles formed at walls and other vertical surfaces and where required to make the work watertight. Bituminous-plastic-type-flashings described hereinafter shall be used, except where metal flashings are indicated or specified in section: SHEET METALWORK. Flashings shall be provided and installed immediately after the top ply of roofing is placed and shall be returned and sealed or capped and sealed to waterproof edges and ends. Flashings shall be stepped where vertical surfaces abut sloped-roof surfaces. The sheet metal reglet up to which base flashings are installed, shall be not more than 16 inches nor less than 8 inches above the roofing surfaces.

8.1 Base Flashings shall consist of 4 layers of asphalt-saturated felt and one layer of mineral-surfaced roofing, cemented together with bituminous cement. Masonry over which flashing is to be installed shall be primed with asphalt primer which shall be allowed to dry thoroughly. The layers of saturated felt and the mineral-surfaced roofing shall be evenly embedded in bituminous cement applied with a trowel, using not less than 50 pounds per square per layer. The first layer of felt shall extend out onto the roofing at least 2 inches, and each succeeding layer shall extend at least 2 inches beyond the preceding layer. All layers shall extend up the vertical surface to the sheet-metal reglets or to the top of curb when sheet metal reglets are not required, and shall be secured at the top on 8-inch centers with nails or fasteners hereinbefore specified for securing roofing felts. Saturated-felt flashing sheets shall be approximately 5 feet in length and shall be lapped not less than 6 inches with laps staggered in each layer. Mineral-surfaced roofing strips shall be cut from the width of the material, and the strips shall be of sufficient length to extend from the sheet-metal reglet or curb onto the roof at least 2 inches beyond the widest flashing sheet. Mineral-surfaced strips shall be installed with selvage edges at right angles to the cant. Selvage laps shall be well cemented, and where possible, shall be shingled in a direction away from the prevailing wind.

8.1.1 Cants shall be installed in the angles formed at walls and other vertical surfaces as backing for base flashings. Cants shall be laid in a solid coat of bituminous cememt just prior to laying the roofing plies. Cants shall have a 5-1/2-inch face dimension and shall be continuous and installed in as long lengths as practicable.

8.2 Strip Flashings. Roof flanges of lead and sheet-metal flashings, such as gravel stops, base flashings, and plumbing flashings, furnished and installed under other sections of the specifications shall be stripped with 2 layers of roofing felt. After installation of flashings over the top ply of roofing, 2 layers of roofing felt, 9 and 12 inches wide, shall be successively mopped on top of the roof flange to form a waterproof joint between roofing and flashings.

9. ROOF CUTOUT SAMPLES. After completion of the application of the roof felts, but prior to application of the flood coat, cutouts of the roofing shall be taken from the deck at locations directed. The cutout samples shall be visually examined immediately after removal from the deck for free water between plies or skips in bitumen application between plies, and then weighed to determine the total amount of bitumen used exclusive of the flood coat. Samples shall be one square foot in area, accurately cut to template. The thickness of the samples, based on the number of plies of felts and number of moppings of bitumen, shall be as specified in table III for the applicable roof type and surface condition. The weight of the samples shall be not less than the weight shown for the applicable roof type in table III. Roof cutout samples shall be taken in the presence of the Contracting Officer.

9.1 Sampling Requirements. Not less than one sample shall be cut from roofing applied to each building. At least one sample shall be taken daily during roofing work and an additional sample cut daily for each 100 square or fractions thereof over the first 100 squares. Should the first daily sample show free water or absence of bitumen between plies, the roofing that has been laid that day shall be removed and relaid in a dry condition. In the event of free water or the absence of bitumen in other samples, or in the event of a deficiency in the amount of bitumen

applied, additional samples shall be taken to determine the extent of the deficiency. Free water between plies or absence of bitumen between plies shall be cause for removal of affected portion of the roof and replacement in a dry condition. Where only bitumen deficiencies are found, the deficient areas shall have an additional ply of felt applied in a full mopping of bitumen. If the bitumen is deficient in 25 percent of the total deck area, an additional ply of felt shall be added over the entire deck in a full mopping of the bitumen specified. Correction of the above deficiencies shall be made at no additional cost to the Government.

9.1.1 Sample Cutting Device shall be rectangular and of proper size for cutting a sample exactly one square foot in area, 12 x 12 or 4 x 36 inches as approved by the Contracting Officer. The device may be the self-cutting type or a metal template capable of being secured to the roof for use with a sharp roofing knife. Cutting edges of the device or knife shall be kept clean by washing in proper solvent after each cut.

9.1.2 Scales shall be calibrated to an accuracy of 1/2 ounce.

9.2 Patching Cutout Area. Immediately after being weighed, the sample shall be replaced and tamped into position in the cutout area which meanwhile has been flooded with hot bitumen. Should it become impossible to immediately replace the cutout sample in the roof, a new section of equivalent size and structure shall be substituted. The area shall then be covered with 3 plies of felt, hot mopped in place with the first ply overlapping the cutout area 3 inches on all sides and each succeeding ply overlapping the preceding ply 3 inches on all sides.

10. SURFACING. After roofing felts have been laid and flashings installed, the entire roof surface except cants shall be flood-coated uniformly with hot asphalt at the rate hereinbefore specified. While bitumen is still hot, the surfacing aggregate shall be embedded therein. Aggregate shall be placed in the manner and quantity required to form a compact embedded overlay. Loose aggregate shall be removed from the roof. When the flood coat and aggregate cannot be applied the same day the felts are laid, or if there is a probability of rain falling on the felts before the flood coat and aggregate can be applied, a light glaze coat of bitumen, 10 to 15 pounds per square, shall be applied over the exposed felts. The glaze coat may be considered as part of the flood coat provided the surfacing operation is completed within 24 hours after application of the glaze coat. Where glaze coat is used, surface treatment shall be completed as soon as possible.

Table I

LAPS FOR ROOFING FELTS AND ROLL ROOFING(a)

Layers or plies	Laps in inches for 36-inch width	Starting widths in inches for 36-inch width
1	4	36
2	19	18 and 36
3	24-2/3	12, 24, and 36
4	27-1/2	9, 18, 27, 36

(a) End laps of roofing felts and roll roofing shall be 6 inches and staggered.

Table II

NAILING OF BUILT-UP ROOFING LAID DIRECTLY ON DECK(a)

Type of Deck	Bitumen and Slope, Inches per Foot	Smooth-Surfaced Roll Roofing	Mopped Felts	Remarks
Wood	Asphalt, up through 3". (Pitch, up through 2".)	Nail 2" from lower edge at 24" on centers.	Nail 2" from upper edge at 24" on centers.	

(a) Includes the use of conventional nails or other approved fasteners.

Table III

ROOF CUTOUT SAMPLES REQUIREMENTS

Roof type	Application or surface condition	Thickness of sample: No. of plies	No. of moppings	Weight of sample ounces(a)	Remarks
5AWS	Over dry sheet, wood & directly on deck, others	1 roll roofing, 4 felt	4	27	Sheathing paper not included.
4AWGS	Over dry sheet or directly over deck, dry	1 comb. base 3 mat	3 at 30 lb	19	Does not include dry sheet over wood deck.

(a) Based on 5 percent tolerance of square-foot sample = 95 percent of actual weight of sample, to nearest half ounce. Correct sample weights when applicable by the addition of 4.3 oz. for insulation paper cover, and 3.5 oz. for 6-inch lap of roll roofing. Shorter laps will be proportionally computed.

* * * * *

SECTION 14T

SHEET METALWORK, GENERAL

Index

1. Applicable Publications
2. General
3. Shop Drawings
4. Materials
5. Exposed Sheet Metal
6. Optional Materials
7. Protection of Aluminum
8. Types of Joints
9. Fastenings
10. Soldering, Riveting, Seaming, and Sealing
11. Samples and Certificates
12. Handling and Storage
13. Scupper Linings
14. Expansion Joints
15. Flashings
16. Gravel Stops and Fasciae
17. Pitch Pockets
18. Reglets
19. Painting

1. APPLICABLE PUBLICATIONS. The following publications of the issues listed below, but referred to thereafter by basic designation only, form a part of this specification to the extent indicated by the references thereto.

1.1 Federal Specifications.

L-S-125B	Screening, Insect, Nonmetallic
O-F-506C	Flux, Soldering; Paste and Liquid
QQ-S-571E & Am-2	Solder; Tin Alloy; Lead-Tin Alloy; and Lead Alloy
RR-W-365 & Am-1	Wire Fabric (Insect Screening)
SS-C-153C	Cement, Bituminous, Plastic
TT-P-645	Primer, Paint, Zinc-Chromate, Alkyd Type
UU-B-790a	Building Paper, Vegetable Fiber: (Kraft, Waterproofed, Water Repellent and Fire Resistant)

1.2 American Society for Testing and Materials (ASTM) Publications.

A 167-74	Stainless and Heat-Resisting Chromium-Nickel Steel Plate, Sheet, and Strip
A 176-75	Stainless and Heat-Resisting Chromium Steel Plate, Sheet, and Strip
B 36-74	Brass Plate, Sheet, Strip, and Rolled Bar
B 101-40(R 1971)	Lead-Coated Copper Sheets
B 209-76	Aluminum-Alloy Sheet and Plate
B 211-75	Aluminum-Alloy Bars, Rod, and Wires
B 221-76	Aluminum-Alloy Extruded Bars, Rods, Wire, Shapes, and Tubes

B 316-75	Aluminum-Alloy Rivet and Cold-Heading Wire and Rods
B 370-76a	Copper Sheet and Strip for Building Construction
D 226-75	Asphalt-Saturated Roofing Felt for Use in Membrane Waterproofing and Built-Up Roofing
D 412-75	Rubber Properties in Tension
D 822-60(R 1973)	Operating Light- and Water-Exposure Apparatus (Carbon-Arc Type) for Testing Paint, Varnish, Lacquer and Related Products
D 1784-75	Rigid Poly (Vinyl Chloride) Compounds and Chlorinated Poly (Vinyl Chloride) Compounds

1.3 Sheet Metal and Air Conditioning Contractors National Association, Inc. (SMACNA) Publication.

Architectural Sheet Metal Manual (Second edition 1968, 3d printing, June 1972)

2. GENERAL. Sheet metal items shall be fabricated to the thickness or weight shown in table I and multiple lengths of items shall be joined together as shown in table II. Surfaces that are to receive sheet metal and underlayments shall be even, smooth, sound, thoroughly clean and dry, and free from defects that might affect the application. Sheet metal items shall be furnished in 8- to 10-foot lengths.

TABLE I. SHEET METAL WEIGHTS, THICKNESSES, AND GAGES

Item description	Copper, ounce per square foot	Aluminum, inch	Stainless steel, inch	Copper clad stainless steel, inch
Scupper lining . .	20	.032	.015	.015
Flashings:				
Base	20	.040	.018	.018
Cap	16	.032	.015	.015
Pitch pockets . .	16	.032	.015	.015
Reglets(c)	10	—	.010	.010

(b) Use copper, not copper clad, in size indicated.

(c) May be polyvinyl chloride.

TABLE II. SHEET METAL JOINTS.

Item Designation	Type of Joint: Copper, copper clad stainless steel, and stainless steel	Type of Joint: Aluminum	Remarks
Flashings:			
base.	1-inch flat locked, soldered-3-inch lap for expansion joint, sealed.	1-inch flat locked, sealed 3-inch lap for expansion joint, sealed.	Aluminum producer's recommended hard setting sealant for locked aluminum joints. Each expansion joint for all metals shall have one continuous strip of 1/16-inch thick by 1/4-inch wide No. 7 sealant.

TABLE II. SHEET METAL JOINTS. (Cont'd)

	Type of Joint		
reglets.	Butt joint.	—	Seal reglet groove with No. 1 sealant.(b)
Gravel stops:			
Extrusions.	—	Butt with 1/2-inch space.	Use sheet flashing beneath and a cover plate.
Sheet, smooth.	Butt with 1/2-inch space.	Butt with 1/2-inch space.	Use 6-inch cover plate.
Sheet, corrugated.	Butt with space.	Butt with space.	Use sheet flashing beneath and a cover plate or combination unit.
Gutters.	1-1/2-inch lap, riveted and soldered.	1-inch flat locked, riveted, and sealed.	Aluminum producers recommended hard setting sealant for locked aluminum joints.
Pitch pockets.	1-inch soldered lap.	1-inch flat locked and sealed.	Aluminum producers recommended hard setting sealant for locked aluminum joints.
Parapet covers.	Flat lock seam.	Flat lock seam.	————

(b) Polyvinyl chloride type reglet shall be sealed with manufacturer's recommended butyl rubber sealant.

Single pieces less than 8 feet long may be used to connect to factory fabricated inside and outside corners, and at ends of runs. Cutting, fitting, drilling, and other operations in connection with sheet metal required to accommodate the work of other trades shall be performed by sheet metal mechanics. Accessories and other items essential to complete the sheet metal installation, though not specifically indicated or specified shall be provided. Where sheet metal abuts or extends into adjacent materials, the juncture shall be executed in a manner to assure weathertight construction. Roof flanges of sheet metal shall be set in plastic bituminous cement over built-up roofing or shall be woven into shingle roofing before nailing. Application of bituminous strip flashing over roof flanges for various sheet metal items is covered in section: BUILT-UP ROOFING. Installation of sheet metal items used in conjunction with roofing, such as gravel stops, shall be coordinated with roofing work to permit continuous roof surfacing operations. Wire gage for copper wire shall be Brown and Sharpe. Factory fabricated components such as reglets, flashings, and gravel stops shall be packed in cartons which are marked with the manufacturer's name or trademark. Bulk materials from which items are field fabricated shall have manufacturer's name or trademark printed or embossed at frequent intervals to permit easy identification. Sheet metalwork, including ductwork, pertaining to heating, ventilating and air conditioning is included in appropriate sections.

3. SHOP DRAWINGS showing complete erection layouts, details, and installation instructions shall be submitted for approval in accordance with the SPECIAL PROVISIONS. Materials shall not be delivered to the site until after the approved shop drawings have been returned to the Contractor. Details and layouts shall show weights, gages, or thicknesses of sheet metal, joining, expansion-joint spacing, and procedures to be followed during installation. The Contractor shall be responsible for any errors of detailing and fabrication and for the correct fitting of sheet metalwork shown on the shop drawings. Scaled catalog cuts may be submitted for factory fabricated items. Shop drawings shall be provided for the following items.

Gravel stops and fasciae.

Pitch pockets.

Base and cap flashings.

Flashings at roof penetrations.

4. MATERIALS shall conform to the respective specifications and other requirements specified below.

4.1 Aluminum Alloy.

4.1.1 Sheets. ASTM Standard B 209, either 3003, 3004, Alclad 3003, Alclad 3004, or Alclad 3005; appropriate temper, unless temper is specified herein.

4.1.2 Extrusions. ASTM Standard B 221, alloy 6063, temper T5.

4.1.3 Rivets. ASTM Standard B 316, alloy 1100, 5052, 5056, 6053, or 6061; appropriate temper unless specified.

4.1.4 Screws, Bolts, Nuts, and Wire. ASTM Specification B 211, alloy 1100, 5052, or 6061; appropriate temper, unless otherwise specified.

4.2 Sealing Compound. Sealing compounds referred to herein are specified in section: CALKING AND SEALANTS.

4.3 Copper. ASTM Specification B 370, sheet and strip, light cold-rolled temper, except where otherwise indicated.

4.4 Copper Clad Stainless Steel shall be composed of a 10 percent thickness of copper metallurgically bonded to each side of an 80 percent core thickness of stainless steel. Copper shall conform to ASTM Specification B 370. The stainless steel core material shall conform to ASTM Standard A 176 except that the material shall be known as alloy 409 with chemical analysis as follows: chromium 10.50-11.75 percent, carbon .08 percent maximum, manganese .20-1.00 percent, silicon 1.00 percent maximum, phosphorus .030 percent maximum, sulfur .030 percent maximum, nickel .50 percent maximum, titalium .35-.75 percent, remainder iron.

4.5 Stainless Steel. Corrosion-resisting steel hereinafter referred to as "stainless steel"; ASTM Standard A 167, sheet or strip type 301, 302, 304, or 316; finish 2D; annealed. Type for fasteners is optional.

4.6 Fastening Materials not specified for a particular sheet metal application shall be of the type best suited for the intended purpose. Nails shall be barbed, annular thread or screw type. Nails, rivets, screws, bolts and nuts used for fastening plain and lead coated copper and copper clad stainless steel items shall be bronze, brass, or copper. Aluminum nails, rivets, screws, bolts, and nuts, shall be used for fastening aluminum items. Stainless steel, shall be used for nails, screws, bolts, nuts, and rivets for fastening stainless steel items. Stainless steel fastenings shall be used for connecting dissimilar metals.

4.7 Felt. ASTM Specification D 226, type I.

4.8 Screens and Frames.

4.8.1 Insect Screen cloth shall conform to Federal Specification RR-W-365, type VI or VII, or to Federal Specification L-S-125, type II, class 1, aluminum color. Mesh size shall be 18 by 16.

4.8.2 Frames shall be provided for screens. Frame shall be removable and shall be of extruded aluminum or stainless steel. Insect screen frames shall be grooved type with vinyl or neoprene spline insert for securing screen cloth.

4.9 Lead-Coated Copper. ASTM Standard B 101, type I or type II, class A. Copper shall be cold rolled and shall weigh not less than shown for the item designated in table I, hereinafter, before coating. Copper clad stainless steel with a lead coating as previously specified may be substituted for copper. Thickness of the copper clad stainless steel shall be not less than shown for the item designated in table I for copper clad stainless steel before coating.

4.10 Paper. Federal Specification UU-B-790, style 4, grade B.

4.11 Bituminous Plastic Cement. Federal Specification SS-C-153, type I with asphalt roofing felts.

4.12 Plastic Hardsetting Sealant. Type as recommended by the aluminum producer.

4.13 Plastic Reglet. ASTM Specification D 1784, class 14333-D, 0.075-inch minimum thickness.

4.14 Solder shall conform to Federal Specification QQ-S-571; composition Sn50 for copper and composition Sn60 for stainless steel and lead-coated copper.

4.15 Soldering Flux shall be Federal Specification O-F-506, type I, form A or B.

4.16 Zinc-Chromate Primer. Federal Specification TT-P-645.

5. EXPOSED SHEET METAL. The following items shall be considered as exposed sheet metal: scupper lining, gravel stops and fasciae, cap, base, and eave flashings.

6. OPTIONAL MATERIALS. Where table I indicates more than one metal for a particular item any listed metal may be selected by the Contractor. Different items need not be of the same metal, except that if copper or copper clad stainless steel is selected for any exposed item, all exposed items shall be copper or copper clad stainless steel. The nominal thickness or weight per square foot shall be not less than specified for the item in table I.

7. PROTECTION OF ALUMINUM. Aluminum shall not be used where it will be in contact with copper or where it will contact water which flows over copper surfaces. Aluminum that will be in contact with wet or pressure-treated wood, mortar, concrete, masonry, or ferrous metals shall be protected against galvanic or corrosive action by one of the following methods.

7.1 Contact Surface. Aluminum surfaces to be protected shall be solvent cleaned and given a coat of zinc-chromate primer and one coat of aluminum paint. Aluminum paint shall conform to specifications for aluminum paint in section: PAINTING, GENERAL.

7.2 Nonabsorptive Tape or Gasket shall be placed between the adjoining surfaces and shall be cemented to the aluminum surface using a cement compatible with aluminum.

8. TYPES OF JOINTS. Joints consist of locked, lapped, butt, riveted, and soldered types. Aluminum 0.040 inch or less in thickness shall be either lapped for expansion joints or lock joined, riveted, and filled with hard setting sealant. Table II herein indicates the types of joints to be used and the sealants required. Unless otherwise specified, sealants are covered in section: CALKING AND SEALANTS.

9. FASTENINGS for copper, copper clad stainless steel, aluminum, and stainless steel shall be as specified in subparagraph Fastening Materials under paragraph MATERIALS.

9.1 Nailing of Sheet Metal shall be confined generally to sheet metal having a width of less than 18 inches. Nailing of flashings shall be confined to one edge only. Nails shall be evenly spaced not over 3 inches on centers and approximately 1/2 inch from edge unless otherwise specified or indicated. Where sheet metal is applied to other than wood surfaces, detailed shop drawings shall include locations for sleepers and nailing strips required to properly secure the work. Sleepers and nailing strips are specified in section: ROUGH CARPENTRY.

9.2 Cleats shall be provided where specified or required and shall be evenly spaced not over 12 inches on centers unless otherwise specified or indicated. Unless otherwise specified cleats shall be not less than 2 inches wide by 3 inches long and shall be of the same material and thickness as the sheet metal being installed. One end of the cleat shall be secured with two nails and the cleat folded back over the nailheads. The other end shall be locked into the seam. Cleats for soldered seams shall be pretinned.

9.3 Bolts, Rivets, and Screws shall be installed where indicated or required.

10. SOLDERING, RIVETING, SEAMING, AND SEALING. Where soldering is specified herein it shall apply to copper, copper clad stainless steel, and stainless steel items. Where riveting and sealing are specified for aluminum it shall apply to aluminum 0.040 inch or less in thickness. Riveting shall apply to either metal as specified.

10.1 Soldering. Edges of sheet metals, except lead coated material shall be pretinned before soldering is begun. Soldering shall be done slowly with well heated soldering irons so as to thoroughly heat the seams and completely sweat the solder through the full width of the seam. Edges of lead coated material to be soldered shall be scraped or wire-brushed to produce a bright surface, and seams shall have a liberal amount of flux brushed in before soldering is begun. Edges of stainless steel to be pretinned shall be treated with soldering acid flux. Soldering shall follow immediately after application of the flux. Upon completion of soldering the acid flux residue shall be thoroughly cleaned from the sheet metal with a solution of washing soda in water and rinsed with clean water. Joints in aluminum sheets 0.040 inch or less in thickness shall be made mechanically and sealed with the sealant specified. Aluminum shall not be soldered.

10.2 Seams shall conform to the following requirements.

10.2.1 Flat-Lock Seams shall finish not less than one inch wide.

10.2.2 Soldered-Lap Seams shall finish not less than one inch wide.

10.2.3 Unsoldered Plain-Lap Seams shall lap not less than 3 inches unless otherwise specified.

10.2.4 Flat Seams shall be made in the direction of the flow.

11. SAMPLES AND CERTIFICATES.

11.1 Samples of Materials proposed for use shall be submitted to the Contracting Officer for approval on request. Sufficient samples shall be provided for check testing by the Government as required.

11.2 Certificates of Compliance with specification requirements shall be submitted in accordance with SPECIAL PROVISIONS.

12. HANDLING AND STORAGE. Sheet-metal items shall be carefully handled to prevent damage to the surfaces, edges, and ends, and shall be stored at the site above the ground in a covered, dry location. Damaged items that cannot be restored to like-new condition will be rejected and shall be replaced at no addition cost to the Government.

13. SCUPPER LINING.

13.1 Scupper Linings. The interior of the scupper opening shall be lined with sheet metal. The lining shall extend through and project outside of the wall to form a spout with a drip on the bottom edge and shall be formed to return not less than one inch against both faces of the wall or parapet with the outside edges folded under 1/2 inch less on the top and sides. The perimeter of the lining shall be approximately 1/2 inch less than the perimeter of the scupper. The top and sides of scuppers on the roof-deck side shall be joined to base flashing by a locked and soldered joint. The bottom edge shall be joined by a locked and soldered joint to the base flashing and where required, shall be formed with a ridge to act as a gravel stop around the scupper inlet. Surfaces to receive the lining shall be coated with bituminous plastic cement.

14. EXPANSION AND CONTRACTION JOINTS FOR SHEET METAL shall be provided at 40-foot intervals for copper and stainless steel and at 32-foot intervals for aluminum, except that where the distance between the last expansion joint and the end of the continuous run is more than half the required interval spacing an additional joint shall be provided. Joints shall be evenly spaced. Extruded aluminum gravel stops and fasciae shall be joined by expansion and contraction joints at not more than 12-foot spacing.

15. FLASHINGS shall be installed at intersections of roof with vertical surfaces and at projections through roof, except that flashing for heating and plumbing, including piping, roof, and floor drains, and for electrical conduit projections through roof or walls is covered in appropriate sections for such work. Cap flashings shall be turned around exterior corners of masonry or concrete walls at least 2 inches, shall be secured into masonry joints and into concrete with expansion anchors and sealed with No. 4 sealing compound. Cap and base flashing for exterior and interior corners shall be factory-fabricated units. Corner units shall have mitered joints, shall be installed with 3-inch lap joint over flashings on each side. Joining shall be as specified in table II. Unless otherwise indicated, through-wall flashing shall be terminated 1/2 inch inside each exposed face of the wall. Except as otherwise indicated, cap flashings shall be provided over base flashings. Perforations in flashings made by masonry anchors shall be covered up by an application of bituminous plastic cement at the perforation. Flashing shall be installed on top of joint reinforcement.

15.1 Base Flashing shall extend up vertical surfaces to reglet and out on the roof or horizontal surface not less than 4 inches. Straight runs of base flashing shall be made up in units of lengths conforming to the spacing of expansion joints specified in paragraph Expansion and Contraction Joints for Sheet Metal. Joints in base flashing shall be made as specified in table II. Metal base flashing shall be installed at locations indicated and shall be coordinated with roofing work. Metal base flashing shall be set in plastic bituminous cement over the roofing felts, and nailed to nailing strip and shall be secured in placed on the roof side with nails spaced not more than 3 inches on centers. Bituminous base flashings are covered in section: BUILT-UP ROOFING.

15.2 Cap Flashing shall be installed either in a reglet specified in paragraph REGLETS or shall consist of a two-piece combination unit with the receiver component built in the construction and the cap component interlocking not less than 1-1/2 inches into the receiver. The flange of the receiver component installed into masonry shall extend not less than 4 inches into the joint. Flange shall be located not less than 8 inches nor more than 16 inches above roofing not having cant strips or shall be located not less than 5 inches nor more than 13 inches above cant strip. Cap flashing shall be fabricated from any of the materials specified for cap flashing in table I, except two-piece combination unit shall be fabricated of copper or copper clad stainless steel of the thickness specified. Cap flashing shall overlap metal base flashing not less than 3 inches and when used with reglets shall extend into reglets not less than 1-1/8 inches. Where bituminous base flashings are provided, the cap flashing shall extend down as close as practicable to the top of the cant strip. Cap flashing shall be factory formed to provide spring action against the base flashing. Lower edge shall have a longitudinal V-type crimp or shall be folded under not less than 1/2-inch. Cap Flashing terminations shall be sealed.

16. GRAVEL STOPS AND FASCIAE shall be provided for roof edges. Sheets shall be fabricated without longitudinal joints except where two-piece fasciae are used when fasciae depth exceeds 7 inches. Provision for expansion shall be provided at joints. Factory fabricated internal and external corner units with mitered joints shall be provided. Roof flange and splice plate of the gravel stop and fascia shall extend out on the roof not less than 4 inches, and shall be set in plastic bituminous cement over the roofing felt. Roof flange shall be nailed with nails spaced not greater than 3 inches on centers located within one inch of the outer edge of the flange. The fascia section shall not be face nailed except as specified for two-piece fasciae. The upper piece of two-piece fascia is the same as specified above except that the fascia depth shall be at least 3-1/2 inches, and it shall overlap the lower fascia not less than 2 inches. The lower piece shall be hooked 1/2 inch over edge strip and splice plate and face nailed on 12-inch centers one inch below top of sheet. The upper fascia shall be hemmed 1/2 inch at lower edge and shall be formed to fit tight against lower fascia. Either smooth or corrugated sheets specified hereinafter, may be used at the option of the Contractor. When aluminum is indicated in table I, the gravel stop and fascia may be of extruded aluminum.

16.1 Extrusions. The extruded type of aluminum gravel stop and fascia shall be a factory fabricated, prepackaged, complete system with fastenings, of the style indicated. The system shall be installed in accordance with the manufacturer's recommendations and the other requirements herein specified. Extruded cover plate shall be provided over each joint. Aluminum sheet flashing 0.025 inch thick by at least 12 inches wide and having a dept to within one inche of the bottom edge of fascia shall be applied under the gravel stop and fascia at each joint.

16.2 Sheets, Smooth. Joining shall be as specified in table II. Gravel stops shall be installed with 1/2-inch space between sections. The joint shall be covered with a 6-inch wide cover plate formed to the profile of the gravel stop. The cover plate shall be embedded in mastic, nailed through the opening between the gravel stop sections and loose locked to the drip edge. The lower edge of fascia shall be hooked 3/4 inch over an edge strip specified in paragraph EDGE STRIP. The lower hooked edge shall be bent outward at an angle of 30 degrees. When fascia exceeds 6 inches in depth, one or more horizontal steps not less than 1/2 inch high shall be formed in the fascia. When fascia exceeds 7-inch depth, two-piece fascia shall be used.

17. PITCH POCKETS shall be provided where indicated. The pitch pockets shall have single hem edge roof flanges at least 4 inches wide and shall be strip flashed as specified in section: BUILT-UP ROOFING. Roof flanges shall be joined as specified in table II. Upstanding leg shall be at least 3 inches high, and pocket shall be filled with hot roofing bitumen over a one-inch layer of bituminous cement.

18. REGLETS shall be a factory fabricated product of proven design, complete with fittings and special shapes as may be required. Rigid polyvinyl chloride type material as specified hereinbefore may be used. Open-type reglets shall be filled with fiberboard or other suitable separator to prevent crushing of the slot during installation. Reglets shall be installed in a manner to provide a watertight installation. Reglets shall be located not less than 8 inches nor more than 16 inches above roofing not having cant strips or shall be located not less than 5 inches nor more than 13 inches above cant strip. Reglets may be formed to receive cap flashing having a 3/8-inch, 45-degree snap lock. Reglet plugs shall be spaced not over 12 inches on centers and reglet grooves shall be filled with sealant specified in table II. Friction or slot-type reglets shall have metal flashings inserted the full depth of slot and shall be lightly punched every 12 inches to crimp the reglet and cap flashing together. Ends of each section of reglet shall be alined, butt joined and securely held in position until concrete or mortar has hardened. Bituminous flashings shall be installed up to reglets as specified in section: BUILT-UP ROOFING.

18.1 For Masonry. Reglets for cap flashing shall be built in the masonry joints. They shall provide a continuous groove not less than 3/16 inch at opening, extending horizontally into the mortar joint not less than 1-1/8 inches. They shall have toothed-lip section to anchor the upturned edge of the metal snap-lock flashing when inserted. Polyvinyl chloride type shall be installed as recommended by the manufacturer.

19. PAINTING. Sheet metalwork shall not be field painted except as required for protection of aluminum.

* * * * *

SECTION 14W

ROOFING, STRIP SHINGLES

Index

1. Applicable Publications
2. General
3. Delivery and Storage of Materials
4. Materials
5. Preparation of Surfaces
6. Application of Roofing

1. APPLICABLE PUBLICATIONS. The following publications of the issues listed below, but referred to thereafter by basic designation only, form a part of this specification to the extent indicated by the references thereto.

1.1 Federal Specifications (Fed. Spec.).

SS-C-153C	Cement, Bituminous, Plastic
SS-R-630D & Int. Am-2 (GSA-FSS)	Roofing Felt (Roll, Asphalt-Prepared, Mineral Surfaced)

1.2 American Society for Testing and Materials (ASTM) Publication.

D 226-77	Asphalt-Saturated Organic Roofing Felt for Use in Membrane Waterproofing and Built-Up Roofing

1.3 Underwriters Laboratories, Inc. (UL) Publications.

UL 55B	Class C Asphalt Organic-Felt Sheet Roofing and Shingles (October 1974; Rev May 1 1975)
UL 790	Tests for Fire Resistance of Roof Covering Materials (May 1973)
UL 997	Wind Resistance of Prepared Roof Covering Materials (Aug 1973)

2. GENERAL. Asphalt strip-shingles shall be applied to the roof surfaces indicated. Metal flashings are specified in section: SHEET METALWORK, GENERAL. Metal drip edge and asphalt flashings are included in this section.

3. DELIVERY AND STORAGE OF MATERIALS. Deliver materials in manufacturer's unopened bundles and containers with the manufacturer's brand and name marked clearly thereon. Store shingles in accordance with manufacturer's printed instructions. Store roll goods on end in an upright position. Immediately before laying, felt roofs and roll roofing shall be stored for 24 hours in an area maintained at no lower temperature than 50 degrees F.

4. MATERIALS shall conform to the respective specifications and standards, and other requirements hereinafter specified.

4.1 Asphalt-Saturated-Felt Underlayment. ASTM D 226, Type I.

4.2 Bituminous Cement. Fed. Spec. SS-C-153, Type I.

4.3 Nails. Nails shall be in accordance with manufacturer's printed instructions.

4.4 Mineral-Surfaced Roll Roofing. Fed. Spec. SS-R-630, Class I. Select color to match color of adjacent shingles.

4.5 Shingles. Shingles shall meet the requirements of Underwriters Laboratories, Inc., for Class C, wind-resistant shingles, by equaling or exceeding the requirements of UL 55B, UL 790, and UL 997. Shingle bundle wrapping shall bear the label of Underwriters Laboratories, Inc. Shingles shall be square-butt strips of uniform thickness or of thick-butt style. Size of shingles shall be approximately 12 by 36 inches. Any of the following designs are permitted: 2-tab design; 3-tab design; or no cut-out design. Shingles color shall be dark bronze as selected from the manufacturers standard colors.

5. PREPARATION OF SURFACES. The construction of any bay or section of roof shall be completed before roofing work is started. Roof surfaces shall be smooth, firm, dry, and free from loose boards, large cracks, and projecting ends that might injure the roofing. Vents and other projections through roofs shall be properly flashed and secured in position, and projecting nails shall be driven firmly home.

6. APPLICATION OF ROOFING. Roofing shall be applied in accordance with the manufacturer's printed instructions as they appear on the bundle wrapping and to the requirements hereinafter specified.

6.1 Metal Drip Edges. Metal drip edges, made of non-corrodible, non-staining metal shall be provided along the eaves and rakes. The metal drip edge shall be applied directly over the underlayment along the rakes and directly on the wood deck at the eaves. Metal drip edges shall extend back from the edge of the deck not more than 3-inches and shall be secured with compatible nails spaced not more than 10 inches on center along the inner edge.

6.2 Underlayment. Before any shingles are applied, asphalt saturated felt underlayment shall be applied to the roof deck sheathing. A single- layer of underlayment is required for all roof slopes 4-inches per foot and greater. A double-layer of underlayment is required for all roof slopes between 2-inches per foot and 4-inches per foot.

6.3 Flashings. Flashings shall be provided at the intersections of roofs, adjoining walls, or projections through the deck such as vent stacks. Careful attention shall be given to the installation of all flashings. For unusual flashings conditions not covered in the manufacturers printed instructions, the Contractor shall contact the roofing manufacturer for recommendations as to details. Valley flashing may be of the open, closed cut, or woven type at the option of the Contractor. For sloping roofs which abut vertical surfaces, metal stepped flashing shall be provided in accordance with section: SHEET METALWORK, GENERAL.

* * * * *

SECTION 14X

FURRING (METAL), LATHING, AND PLASTERING

Index

1. Applicable Publications
2. General
3. Materials
4. Materials List, Samples, and Shop Drawings
5. Delivery and Storage of Materials
6. Lathing
7. Openings
8. Installation of Accessories
9. Plaster Thickness and Surface-Evenness
10. Preparation for Plastering
11. Mixing of Plaster
12. Base-Coat Proportions
13. Application of Base Coats
14. Machine Application
15. Finish-Coat Proportions
16. Application of Finishes
17. Patching
18. Samples of Completed Work

1. APPLICABLE PUBLICATIONS. The following publications of the issues listed below, but referred to thereafter by basic designation only, form a part of this specification to the extent indicated by the references thereto.

1.1 Federal Specifications.

QQ-L-101C	Lath, Metal, (and Other Metal Plaster Bases)
QQ-W-461g	Wire, Steel, Carbon (Round, Bare, and Coated)

1.2 American National Standards Institute, Inc. (ANSI) Standards.

A42.4-1967	Specifications for Interior Lathing and Furring

1.3 American Society for Testing and Materials (ASTM) Publications.

A 109-72	Steel, Carbon, Cold-Rolled Strip
A 570-75 & Errata	Hot-Rolled Carbon Steel Sheet and Strip, Structural Quality
C 29-71	Unit Weight of Aggregate
C 35-70(R 1975)	Inorganic Aggregates for Use in Gypsum Plaster
C 150-74	Portland Cement
C 206-49(R 1974)	Special Finishing Hydrated Lime

2. GENERAL. Portland-cement plaster as included herein shall be applied as specified hereinafter to those areas indicated in the finish schedule. Ceilings shall include exposed overhead surfaces. Wall shall include vertical surfaces including surrounds of openings and recesses. Metal framing and furring systems for application of metal plaster base on walls and ceilings, are included. Plaster base coat proportions are given in table II, and the required types or thickness of lath are in table I at the end of this section. Ends of wire ties used for lathing and furring shall receive 3 full twists and be bent into the plane of the lath. Plaster may be applied directly to interior masonry walls and to interior side of exterior cavity walls. Furring and plaster base shall be used on interior of exterior single wythe masonry walls to receive plaster finish.

3. MATERIALS shall conform to the respective specifications and other requirements specified. Decimal equivalents of sheet-metal gages specified hereinafter are Manfacturers' Standard Gage for Steel Sheets for uncoated or painted sheets and Galvanized Sheet Gage for galvanized sheets. Decimal equivalents of steel wire gages specified hereinafter are the Steel Wire Gage. Allowable tolerances shall be those specified in the applicable material specification.

3.1 Aggregates. The unit weight of aggregates shall be determined in accordance with ASTM Test Method C 29. Aggregates shall conform to ASTM Specifications C 35, except that the gradation of natural or manufactured sand for portland-cement plaster shall be as follows.

Sieve Size	Sand, percentage by weight, retained on each sieve Maximum	Minimum
4	0	–
8	8	2
16	38	22
30	78	52
50	97	65
100	100	97

3.2 Base-Coat Plaster.

3.2.1 Portland-Cement Plaster shall be a mixture of portland cement, sand, and lime as specified in table II.

3.3 Lath.

3.3.1 Metal Plaster Base. Federal Specification QQ-L-101. Types and weights of lath acceptable for various spacings shall be as shown in table I hereinafter. Welded or woven wire lath shall be welded or woven wire with paper backing. Classes 3 and 6 welded or woven wire lath shall have a continuous absorbent paper backing, and class 3 welded or woven wire lath shall have a continuous waterproof paper backing. Welded wire lath shall be maximum 2- by 2-inch mesh of wire not less than 0.0625-inch nominal diameter, 16 gage, with not less than 0.0915-inch nominal diameter, 13 gage, longitudinal stiffener wire on 6-inch centers. Woven wire lath shall be a maximum 1-1/2- by 1-1/2-inch mesh wire of not less than 0.0540-inch nominal diameter, 17 gage. Classes 3 and 6 welded or woven wire lath shall be fabricated in a manner to provide not less than 1/4-inch keying between wire and paper backing or keying shall be obtained by a uniform series of slots in a paper separator woven between the 2 layers of wire.

3.4 Lime. ASTM Specification C 206. Special finishing hydrated lime shall be machine-mixed with water to form a putty and shall be allowed to stand for least 15 minutes before using.

3.4.1 Lime Putty shall be made from special finishing hydrated lime. Approved measures shall be taken to protect the putty from exposure to the sun and to prevent excessive evaporation when stored.

3.5 Nails and Staples. Nails and staples shall be of steel and shall conform to sizes and shapes as specified hereinafter. Sizes specified are minimum.

3.5.1 For Metal Plaster Base. Metal plaster base shall be secured with barbed roofing nails, 0.1205-inch nominal diameter, 11 gage, with 7/16-inch heads, 1-1/2 inches long for use on horizontal wood supports and one inch long for use on vertical wood supports. Four-penny common nails, or wire staples or hook-head metal-lath nails 0.0800-inch nominal diameter, 14 gage and one inch long, may be used in lieu of one-inch roofing nails on vertical supports. Nails and staples for attaching 3/8-inch ribbed lath shall be 3/8-inch longer than the respective types specified above for use on horizontal and vertical wood supports. Common nails shall be bent over to engage at least 2 strands of flat lath or the rib of ribbed lath. Special blued, U-shaped head nails, 0.1055-inch nominal diameter, 12 gage, shall be used for attaching paper-backed wire lath. Where other than self-furring lath is used over metal, masonry, or concrete surfaces, galvanized furring nails that will permit the formation of 1/4-inch plaster keys shall be used.

3.6 Portland Cement. ASTM Specification C 150, type I or type II. Only one type and brand of cement shall be used in the work.

3.7 Water shall be clean, fresh, potable, and free from injurious amounts of oils, acids, alkalis and organic matter injurious to the plaster.

3.8 Metal Plastering Accessories shall be protected by galvanizing except that manufacturer's standard protective coating shall be permitted for cornerite and striplath, and shall conform to the following.

3.8.1 Corner Beads shall be of steel not less than 0.0217-inch nominal thickness, 26 gage. Flange dimensions may include nose of bead.

3.8.1.1 Expanded Flange Corner Bead shall have flanges at least 2-1/2 inches wide and a bead not exceeding 3/16-inch diameter.

3.8.2 Cornerite shall be cut lengthwise from expanded metal lath weighing not less than 2.5 pounds per square yard or shall be formed of at least 19-gage galvanized wire welded or woven into fabric weighing not less than 1.7 pounds per square yard. Cornerite shall form an angle of at least 100 degrees between not less than 2-inch legs.

3.8.3 Striplath shall be expanded-metal lath cut lengthwise from copper-bearing steel sheets to form flat strips of sizes hereinafter specified and weighing not less than 2.5 pounds per square yard.

3.8.4 Base Screeds shall be of steel not less than 0.0217-inch nominal thickness, 26 gage, and shall have a depth of 1/2 inch. Wings on expansion-flange type shall be not less than 2 inches wide.

3.8.5 Casing Beads shall be of steel not less than 0.0276-inch nominal thickness, 24 gage, and shall have a depth of 1/2 inch or 3/4 inch, with expanded wing at least 2 inches wide. Face flange shall be as specified and back s all be slightly arched to provide a spring effect.

3.8.5.1 Square Casing Beads shall have a face flange that subtends a 90-degree angle and shall have a short reveal on the front edge.

3.8.6 Expansion Control-Joint Beads shall be of steel not less than 0.0217-inch nominal thickness, 26 gage, or of zinc alloy not less than 0.013-inch nominal thickness, 29 gage, designed to allow transverse movement of adjoining plaster, and shall have a depth of not less than 1/2-inch with perforated- or expanded-metal wings.

4. MATERIALS LIST, SAMPLES, AND SHOP DRAWINGS. Before starting application of furring, lathing, or plastering, the Contractor shall submit to the Contracting Officer for approval, the materials list, samples, and shop drawings required herein.

4.1 Materials List. A list of materials and acces ories to be incorporated in the work shall be submitted in triplicate, and shall include descriptive data, catalog cuts, and other such information required to identify the materials as to the location or locations of their use in the work. No consideration will be given to partial lists submitted from time to time.

4.2 Samples. One 12- by 12-inch section of each type of lath, and one 12-inch length of each accessory and trim item proposed for use shall be submitted for approval.

4.3 Shop Drawings including installation details shall be submitted for approval in accordance with SPECIAL PROVISIONS for ceiling framing and furring, for framing and furring required to support wall-and ceiling-mounted items, and for framing and furring required at opening in walls and ceilings.

5. DELIVERY AND STORAGE OF MATERIALS. Manufactured materials shall be delivered in the original packages, containers, and bundles bearing the name of the manufacturer and the brand name. Plaster, cement, and lime shall be stored off the ground under watertight cover and away from sweating walls and other damp surfaces until ready for use. Damaged or deteriorated materials shall be removed from the premises.

6. LATHING.

6.1 Application of Metal Plaster Base. Metal plaster base shall be applied with the long dimension across the supports, with true even surfaces, and without sags or buckles. Lath on restrained ceilings shall be turned down at junction with wall, or shall be applied to cornerite or corner bead as specified hereinafter. Metal plaster base on vertical surfaces shall be oriented to provide maximum mechanical bond with plaster and the lower sheet shall be attached to overlap the upper sheet. When paper-backed lath is used, the upper sheet shall be attached to overlap the lower sheet. The lath shall be secured to supports at intervals not exceeding 6 inches. Nails or staples shall be used for securing lath to wood supports. Tie wires, rings, clips, or other approved fasteners having equivalent holding power of the tie wires shall be used for securing the plaster base to masonry. Side-laps or junction of sides of plaster base shall, in addition to being secured to supports, be tied or otherwise secured at intervals not exceeding 9 inches between supports. The types of metal lath applied shall be used within the weight limitations and maximum spacing of supports shown in table I and specified herein.

6.1.1 Flat Lath, Classes 3 and 6 shall have endlaps of not less than one inch, staggered over supports. Sidelaps shall be as required for proper tying but not less than 1/2 inch. Welded or woven wire lath shall lap not less than one mesh at ends and sides. Lath shall return around vertical corners at least one full support or be reinforced with cornerites or corner beads. Ceiling lath shall be turned down at vertical surfaces at least 6 inches. Ends of lath turned at corners shall be secured to abutting lath.

6.1.2 Ribbed Lath, Classes 1 and 4 shall have endlaps of not less than one inch staggered over supports. Sidelaps shall be as required for nesting one rib or lapping one rib but not less than 1/2 inch. Joints at vertical and horizontal corners shall be butted and shall be reinforced with cornerites or corner beads.

6.1.3 Pipe Chases and Recesses. Chases and receses shall be lathed for plastering. Openings over 12 inches wide shall be bridges with furring channels spaced 12 inches on centers. Openings 12 inches wide and less need not be bridged. Lath shall extend 3 inches beyond the edges of the opening,, shall be securely fastened by nailing or tying, shall be tied or clipped to bridging channels, and shall be laced along longitudinal joints.

7. OPENINGS. Reinforcement shall be provided at corners of openings in plastered areas extending 12 inches or more in any dimension by securing striplath diagonally at the corners. Striplath shall be at least 6 inches wide by 16 inches long except that shorter lengths shall be used to preclude lapping striplath. Striplath shall be secured to lathing without extending fastenings into or around supporting members. Where plaster is applied directly to masonry surfaces, the striplath shall be secured to the masonry as specified hereinbefore.

7.1 Ceiling Openings. Framing, for ceiling openings and supplemental supporting members for items mounted in the ceiling shall be provided. Frames for opening shall be securely attached to lath support members, except that frames provided with expanded metal flanges shall be securely attached to lath. Intermediate structural members, although not a part of the structural system, shall be provided for attachment or suspension of support members.

7.2 Wall Openings. Frames shall be provided for wall and partition openings such as required for doors, and access panels. Steel frames shall be as specified in sections: STEEL DOORS AND FRAMES or MISCALLANEOUS METAL. Wood frames, wood bucks, and blocking shall be as specified in section: ROUGH CARPENTRY. Steel frames shall be securely attached through built-in anchors to the nearest stud on each side of the opening by tie wire, bolts, screws, or welding and to the plaster base of solid partitions by securely lapping with the plaster base material or bracing where bracing is specified. Wood frames shall be securely attached to the nearest stud of frame partitions and to wood bucks built into the solid partition. Sizes shall be as indicated for each type and size of wall or partition. Steel frames shall be grouted solid with plaster grout and a groove shall be formed within the frame returns to receive lath and plaster. For hollow partitions, in lieu of grouting steel frames, door opening may be additionally braced by tying together each set of double-jamb studs with not less than four solid metal column clips evenly spaced along each jamb. For ungrouted frames, plaster base shall be inserted beyond frame returns and notched to pass beyond jamb anchors. Partitions not extending to the structural ceiling or structural supports or frame shall be strengthened at openings with angle bracing from each jamb location anchored to the structural ceiling or supports. Cross bracing between partitions or similar bracing may be substituted for angle bracing as approved. Minor frames such as those required for access panels may be provided with expanded metal flanges which shall be securely attached to lath.

8. INSTALLATION OF ACCESSORIES. Accessories shall be set level and plumb to straight lines or set to smooth curves as indicated and shall be securely located on the plaster base in a manner common to the trade so as to develop uniform plaster thickness. Fastenings shall be spaced not over 12 inches on centers for single-flanged accessories and not over 24 inches on centers on each flange of double-flanged accessories. Accessories shall be mitered or coped at corners, or prefabricated corners shall be used. Joints in straight runs shall be formed with splice or tie plates.

8.1 Base Screed shall be installed in long lengths and shall be placed approximately 3 inches above finished floor elevation unless indicated otherwise.

8.2 Corner Beads shall be installed at external plastered corners. Corner beads shall be in single lengths except where the continuous run of the corner exceeds the standard stock length of corner beads. Corner beads shall be secured to the furring members or supports.

8.3 Cornerites. Cornerites shall be installed at internal angles formed by abutting surfaces of metal lath not turned down at horizontal corners or returned around vertical corners. The cornerite shall be secured to abutting lathed surfaces. Where plaster is applied direct to masonry surfaces, the cornerite shall be secured to the masonry as specified hereinbefore.

8.4 Casing Beads shall be installed at the joints of dissimilar base materials in the same plane and at exposed edges of plaster including junctions of walls and ceilings except that beads shall not be installed at restrained ceilings abutting plastered surfaces.

8.5 Expansion Control-Joint Beads shall be installed as control joints in plasterwork at the locations indicated. Plaster base shall not be run continuous through control joints. Additional supports shall be installed as required to support the bead.

9. PLASTER THICKNESS AND SURFACE EVENNESS shall be controlled by grounds or screeds of metal, wood, or plaster. Wood grounds are specified under section: ROUGH CARPENTRY. Plaster shall be finished to a true and even surface well within limits established by best trade practice. Plaster thickness from the face of the plaster base to the finished plaster surface shall be as follows.

Plaster Base	Thickness of Plaster
Metal plaster base	5/8 inch, minimum (a)
Masonry walls	5/8 inch, minimum

(a) The total plaster thickness from the back plane of the metal plaster base exclusive of ribs shall be not less than 3/4 inch.

9.1 Metal Grounds and Screeds. Metal grounds shall be furnished as required for securing trim items and providing finished corners and terminations. Metal screeds shall be installed for base screeds when wood or metal grounds are not required. Temporary screeds shall be installed when permanent screeds or grounds cannot be used. On completion of approved base coats, temporary screeds shall be removed and resultant voids immediately filled with plaster.

9.2 Plaster Screeds shall be used within the plastered areas to supplement wood and metal grounds and screeds.

10. PREPARATION FOR PLASTERING. Base for plaster shall be inspected and approved prior to plastering. Lath, grounds, and accessories shall be true to lines and elevations and securely fastened. Plastering shall not be started until windows are glazed and exterior doors are installed unless openings are temporarily closed with plastic sheeting or cheesecloth. Ventilation, either natural or supplied by fans, circulators, or air-conditioning system, shall be provided to remove excess moisture from plaster and exhaust the moisture outside the building.

10.1 Plastering in Cold Weather. When the ambient temperature is below 55 degrees F., heat shall be maintained in the building continuously and uniformly at not less than 55 degrees F. from one week prior to beginning of plastering operation, during plastering, and until plaster is sufficiently dry to receive surface finishing materials or for at least one week after the plaster has set when no finishing materials are required. Fans and baffles shall be provided when necessary for adequate ventilation and circulation to avoid overheating.

10.2 Masonry Surfaces shall be thoroughly cleaned and free of frost, paint, efflorescence, oil, grease, acids, and loose or foreign matter prior to application of plaster.

11. MIXING OF PLASTER. Plaster shall be mixed in mechanical mixers except where hand-mixing is approved for small quantities. Frozen, caked, or lumped material shall not be used. Each batch shall be proportioned by volume, accurately measured by manual or mechanical devices, and thoroughly mixed with the minimum amount of water until uniform in color and consistency. The proportioning and mixing of plaster for machine application shall be as specified in the paragraph MACHINE APPLICATION. Retempering will not be permitted, and plaster that has begun to set shall be discarded.

12. BASE-COAT PROPORTIONS. The various proportions shall be as indicated in table II for the various types of plaster that may be used for the various plastering conditions.

13. APPLICATION OF BASE COATS. Unless otherwise indicated, two-coat work shall be applied on masonry. Three-coat work shall be applied to metal lath. Base coats shall be carried to the floor, with spaces between grounds filled flush with grounds. Plaster corners above bullnosed corners of other materials shall be molded to the same radius as the bullnosing. Suction of dry porous materials, including plaster, shall be reduced by slightly moistening just prior to plastering.

13.1 Two-Coat Work. The base coat for two-coat plasterwork shall be a scratch coat doubled-back, applied with sufficient material and pressure to form full bond with the plaster base. The doubled-back coat shall bring the plaster out to grounds and shall be rodded and darbied to a true surface. The surface shall be left level but rough to form a bond for the finish coat.

13.2 Three-Coat Work. The scratch and brown coat for three-coat plaster shall be applied as follows.

13.2.1 Scratch Coat shall be applied with sufficient material and pressure to form full bond with solid-base materials and form full keys on metal and wire lath with approximately 1/4-inch thickness of plaster over the plaster base material. The surface shall be scratched to form a bond for the brown coat. Scratch coat of Portland-cement plaster shall be moist-cured with a fog spray until application of the brown coat.

13.2.2 Brown Coat shall not be applied until after the scratch coat has set and hardened, and not less than 24 hours after application of the scratch coat. Brown coat shall be brought out to grounds and straightened out to a true but roughened surface to receive the finish coat. Portland-cement plaster brown coat shall be moist-cured with a fog spray until application of the finish coat.

13.3 Plaster Grout shall be applied to steel frames of openings. Plaster grout may be applied to steel frames of hollow partitions in lieu of tying together the double studs at jambs as required in paragraph OPENINGS. Grout shall be placed and grooved prior to lathing operations. Heads and jambs of frames shall be filled solid with grout. Grout shall be scratch-coat material mixed to a dry consistency.

14. MACHINE APPLICATION. A plastering machine may be used for the application of scratch and brown coats.

14.1 Plaster for Machine Application shall be a special plaster compounded and packaged by the manufacturer for this purpose. Slump cone equipment shall be present on the jobsite when base-coat plastering begins and at all times until it is completed. Testing of the mix shall be the responsibility of the Contractor, but equipment shall be available for use by the Government. Under no circumstances shall additional water be added to the mix to allow pumping through extended hose lines to the plastering nozzle. The amount of water added to each batch of plaster

shall be that quantity which results in a plaster slump of not more than 3 inches for gypsum and 2-1/2 inches for Portland cement using a standard plaster slump cone or 6 inches for gypsum and 5 inches for Portland cement using a concrete slump cone.

14.2 Application of Plaster shall conform to the provisions specified in paragraph APPLICATION OF BASE COATS for plaster applied and finished by hand.

14.3 Control.

14.3.1 Fluidity or Stiffness of plaster shall be tested with a standard 2- by 4- by 6-inch plaster slump testing cone or a 4- by 8- by 12-inch concrete slump testing cone.

14.3.2 Method of Making a Slump Test shall be as follows.

(a) Place cone on center of dry base plate located on a level, firm surface. Hold cone tightly against plate.

(b) Fill the cone with plaster obtained from the hose or nozzle, without air on the nozzle, puddling with tamping rod during the operation to eliminate air bubbles or voids.

(c) Screed plaster level with top of cone.

(d) Lift cone straight up from base plate in a slow and uniform motion, and place it on the base plate next to plaster sample.

(e) Lay a straightedge across top of cone, being careful not to disturb or jostle the plate, and measure the slump in inches from the bottom of the straightedge to the top of the plaster sample.

15. FINISH-COAT PROPORTIONS.

15.1 Portland-Cement-Plaster Finish. By volume, one part Portland cement, 4 parts sand, and 1/4 part lime putty. Lime putty shall be reduced to 1/5 part where Portland-pozzolan cement is used.

16. APPLICATION OF FINISHES. The finish coat shall be applied over a partially dry base coat. The finish coat shall be applied in accordance with the best trade practice for the type of base plaster. The finish coat shall be omitted back of projecting bases, wainscots, fixed equipment, and other locations where indicated. Finish coats shall not be applied above wainscots until wainscots have been installed.

16.1 Portland-Cement-Plaster Finish Coat shall be applied after the brown coat has set and hardened, and not less than 24 hours after application of the brown coat. The finish coat shall be floated to a true and even surface, then troweled in a manner that will force the sand particles down into the plaster, and with the final troweling, leave the surface burnished smooth and free from rough areas, trowel marks, checks, or other blemishes. The finish coat shall be kept moist with a fog spray for at least 2 days, and thereafter shall be protected against rapid drying until properly and thoroughly cured.

17. PATCHING. Plaster showing oversanding, cracks, blisters, pits, checks, or discoloration will not be acceptable. Such plaster shall be removed and replaced with new plaster at the expense of the Contractor. Patching of defective work will be permitted only when approved by the Contracting Officer, and such patching shall match existing work in texture and color.

18. SAMPLES OF COMPLETED WORK may be taken by the Contracting Officer at any time for laboratory inspection and tests to determine conformance.

TABLE I. SUPPORT SPACING FOR METAL AND GYPSUM PLASTER BASE

Type of lath	Weight per square yard, pounds	Maximum center-to-center spacing of supports, inches: Walls and Partitions Framing Wood	Ceilings Framing or Furring Wood
METAL BASE			
CLASS 3 and 6:			
Expanded metal	2.5	16	(a)
Expanded metal	3.4	16	16

TABLE I. (Continued)

CLASS 3:			
Expanded metal	2.5	16	(a)
Expanded metal	3.4	16	16
CLASS 4:			
Expanded metal	2.75	16	16
Expanded metal	3.4	19	19
CLASS 1:			
Expanded metal	3.4	24	24
CLASS 3 and 6, with absorptive paper backing:			
Expanded metal	2.5	16	(a)
Expanded metal	3.4	16	16
Welded and woven wire	–	16	16
CLASS 3, with waterproof paper backing:			
Welded and woven wire	–	16	(a)
CLASS 1, with absorptive paper backing:			
Expanded metal	3.4	24	24

(a) Shall not be used.
(b) Or lath hung vertically

TABLE II. BASE COAT PROPORTIONS, BY VOLUME

Plastering conditions	Portland-Cement Plaster		
	Portland cement	Sand	Lime putty
Over Metal Plaster Base			
Three-coat work:			
Scratch coat	1	4	1/5
Brown coat	1	4	1/5
On Masonry			
Two-coat work:			
Base coat	1	4	1/5
Three-coat work:			
Scratch coat	1	4	1/5
Brown coat	1	4	1/5

* * * * *

SECTION 15A

SOLAR ENERGY SYSTEM

Index

1. Applicable Publications
2. General
3. Materials and Equipment
4. Approval of Materials and Equipment
5. Workmanship
6. Electrical Work
7. Converters
8. Foundations
9. Pressure Gages and Thermometers
10. Pressure and Vacuum Relief Valves
11. Drains
12. Circulating Pumps
13. Temperature Controls
14. Control Valves and Controller
15. Energy Storage Tank
16. Piping
17. Installation of Valves and Equipment
18. Strainers
19. Insulation
20. Painting and Finishing
21. Operations and Maintenance Instructions
22. Tests and Balancing
23. Cleaning of Converter Energy Storage Tank and Piping

1. APPLICABLE PUBLICATIONS. The following publications of the issues listed below, but referred to thereafter by basic designation only, form a part of this specification to the extent indicated by the references thereto.

1.1 Federal Specifications (Fed. Spec.).

GG-G-76D	Gages, Pressure and Vacuum, Dial Indicating (for Air, Steam, Oil, Water, Ammonia, Chloro-Fluoro-Hydrocarbon Gases, and Compressed Gases)
GG-T-321c & Am-1	Thermometers, Self-Indicating, Liquid-in-Glass for Machinery and Piping Systems
QQ-S-698 & Am-3	Steel, Sheet and Strip, Low-Carbon
QQ-S-775D	Steel Sheets, Carbon, Zinc-Coated
QQ-S-775E	Steel Sheets, Carbon, Zinc-Coated (Galvanized) by the Hot-Dip Process
TT-E-496b & Am-2	Enamel: Heat Resisting (400 degrees F), Black
WW-H-171D	Hangers and Supports, Pipe
WW-N-351C	Nipples, Pipe, Threaded
WW-P-404D & Am-1	Pipe, Steel (Seamless and Welded, Black and Zinc-Coated) (Galvanized)
WW-P-406D & Int. Am-1 (GSA-FSS)	Pipe, Steel (Seamless and Welded) (For Ordinary Use)
WW-P-521F	Pipe Fittings, Flange Fittings and Flanges, Steel and Malleable Iron (Threaded and Butt-Welding), 150 Pound
WW-T-799E	Tube, Copper, Seamless, Water and Refrigeration (for Use With Solder Flared- or Compression-Type Fittings)
WW-U-516B	Unions, Brass or Bronze, Threaded Pipe Connections and Solder-Joint Tube Connections
WW-U-531D	Unions, Pipe, Steel or Malleable Iron; Threaded Connection 150 Lbs. and 250 Lbs

WW-V-51E & Int. Am-2 (GSA-FSS)	Valve, Angle, Check, and Globe, Bronze, (125, 150 and 200 Pound, Threaded End, Solder Ends, for Land Use)
WW-V-54D & Int. Am-2 (GSA-FSS)	Valve, Gate, Bronze (125, 150 and 200 Pound, Threaded Ends, Flange Ends, for Land Use)

1.2 Military Specifications (Mil. Spec.).

MIL-E-17814A (DOCKS) & Am-2	Expansion Joints, Pipe, Guided Slip Tube
MIL-G-0021032E (SHIPS) & AM-1	Gaskets, Metallic-Asbestos, Spiral Wound
MIL-T-27730A (ASG)	Tape, Antiseize, Polytetrafluoroethylene with Dispenser

1.3 U.S. Department of Commerce, National Bureau of Standard (NBS) Publications.

Commercial Standard

Handbook: H28	Screw-Thread Standards for Federal Services: Part I (1969); Parts II & III (1957 reprinted December 1966 with corrections)

1.4 American National Standards Institute, Inc. (ANSI) Standards.

B16.5-1973	Steel Pipe and Fittings
B16.21-1962	Nonmetallic Gaskets for Pipe Flanges
B19-1938	Safety Code for Compressed Air Machinery and Equipment
B31.1-1973 & B31.1b-1973 & B31.1c-1973 & B31.1d-1974 & B31.1e-1974 & B31.1f-1975	Power Piping

1.5 American Society for Testing and Materials (ASTM) Specifications.

A 53-75	Welded and Seamless Steel Pipe
A 120-73	Black and Hot-Dipped Zinc-Coated (Galvanized) Welded and Seamless Steel Pipe for Ordinary Uses
B 395-76	U-Bend Seamless Copper and Copper Alloy Heat Exchanger and Condenser Tubes

1.6 American Society of Mechanical Engineers (ASME) Codes.

Boiler and Pressure Vessel Code & Interpretations.

Section VIII	Pressure Vessels, Division 1 (1974; Addenda: Summer & Winter 1974; Summer & Winter 1975; Summer 1976)

Section IX	Welding and Brazing Qualifications (1974; Addenda: Summer & Winter 1974; Summer & Winter 1975; Summer 1976)

1.7 Steel Structures Painting Council (SSPC) Specifications.

SSPC-SP 3-63	Power Tool Cleaning
SSPC-SP 6-63	Commercial Blast Cleaning
SSPC-SP 8-63	Pickling
SSPC-PA 1-64	Shop, Field and Maintenance Painting

1.8 Tubular Exchanger Manufacturers Association, Inc. (TEMA) Standard.

Standards (1968, Revision 1972)

2. GENERAL.

2.1 Conformance with Agency Requirements. Where materials or equipment are specified to conform to requirements of the Underwriters' Laboratories, Inc., or the Factory Mutual System, the Contractor shall submit proof of such conformance. The label or listing of the specified agency will be acceptable evidence. In lieu of the label or listing, the Contractor may submit a written certificate, from any approved nationally recognized testing organization adequately equipped and competent to perform such service, stating that the items have been tested and that the units conform to the requirements, including methods of testing, of the specified agency. Where equipment is specified to conform to requirements of the ASME Boiler and Pressure Vessel Code, the design, fabrication, and installation shall conform to the code in every respect.

2.2 Nameplates. Each major item of equipment shall have the manufacturer's name, address, and catalog number on a plate securely attached to the item.

2.3 Safety Requirements. Belts, pulleys, chains, gears, couplings, projecting setscrews, keys, and other rotating parts shall be fully enclosed or properly guarded so that any person can come in close proximity thereto. High-temperature equipment and piping so located as to endanger personnel or create a fire hazard shall be properly guarded or covered with insulation of a type as below specified. Items such as catwalks, operating platforms, and guardrails shall be provided where shown and shall be constructed in accordance with section: MISCELLANEOUS METAL.

2.4 Verification of Dimensions. The contract drawings show the extent and general arrangement of the heating system. The Contractor shall visit the premises to familiarize himself thoroughly with all details of the work and working conditions and verify all dimensions in the field, and shall advise the Contracting Officer of any discrepancy before performing any work. The Contractor shall be specifically responsible for the coordination and proper relation of his work to the building structure and to the work of all trades.

2.5 Spare-Parts Data. As soon as practicable after approval of materials and equipment and, if possible, not later than 4 months prior to the date of beneficial occupancy, the Contractor shall furnish a complete list of parts and supplies, with current unit prices and sources of supply.

3. MATERIALS AND EQUIPMENT shall conform to the respective publications and other requirements specified below. Other materials and equipment shall be as specified elsewhere herein and as shown, and shall be the products of manufacturers regularly engaged in such manufacture. Items of equipment shall essentially duplicate equipment that has been in satisfactory use at least 2 years prior to bid opening and shall be supported by a service organization that is, in the opinion of the Contracting Officer, reasonably convenient to the site.

3.1 High Temperature Paint. Federal Specification TT-E-496b & Am-2, black enamel with service temperature capability to 400 degrees F.

3.2 Iron and Steel Sheets.

3.2.1 Galvanized Iron and Steel. Fed. Spec. QQ-S-775, Class d.

3.2.2 Uncoated (Black) Steel. Fed. Spec. QQ-S-698, composition, condition, and finish best suited to the intended use. Gage numbers specified below refer to manufacturers' standard gage.

3.3 Pipe and Pipe Fittings.

3.3.1 Malleable-Iron Pipe Fittings. Fed. Spec. WW-P-521, type required to match adjacent piping.

3.3.2 Nipples. Fed. Spec. WW-N-351, standard weight.

3.3.3 Pipe. ASTM A 53, or A 106, Grade A or B standard weight black; ASTM A 120, standard weight, black or zinc coated; Fed. Spec. WW-P-406, weight A, Class 1 or 2; WW-P-404, grade A, standard weight, black or zinc coated; as below specified.

3.3.4 Pipe Hangers and Supports. Fed. Spec. WW-H-171.

3.3.5 Pipe Threads. NBS Handbook H28.

3.3.6 Thermometers. Fed. Spec. GG-T-321, Type I, Class 3, with wells; temperature range suitable for use encountered.

3.3.7 Gaskets. Asbestos gaskets shall conform to ANSI B16.21. Metal lie asbestos gaskets shall conform to Mil. Spec. MIL-G-21032 Type II. Approved metallic self-centering style and ring style gasket consisting of metallic retainer and sealing gland may be used for intended service. The metallic gasket shall have had not less than 2 years of satisfactory commercial or industrial service under actual operating conditions similar to the intended use.

3.3.8 Unions. Fed. Spec. WW-U-531 or WW-U-516, type to match adjacent piping.

3.4 Valves for Low Temperature Water Heating System.

3.4.1 Air Charging and Drain Valves. Designed for air to flow to top of tank and for the displaced water to flow back to the system.

3.4.2 Air Valves. Key-operated, heavy-pattern type.

3.4.3 Angle, Check, and Globe Valves. Fed. Spec. WW-V-51 type and class as required. Where suitable, iron body with bronze trim may be substituted for bronze and trim valves. Valves shall be all bronze.

3.4.4 Balancing cocks 2 inches and smaller may be bronze, threaded for black steel. Cocks one inch and larger may be all iron, screwed or flanged end. The cocks shall have a square head or similar device and indicator arc and shall be designed for 125 lb/in^2 service and 250 degrees F temperature. Iron cocks may be lubricated, nonlubricated or tetrafluoroethylene resin coated plug valves. In lieu of plug valves, ball-type valves may be used.

3.4.5 Gate Valves. Sizes 1-1/4 inches or less, Fed. Spec. WW-V-54, Class A.

3.4.6 Flow Control Valve. Ends shall be threaded type as applicable and designed for easy cleaning without disconnecting piping.

3.4.7 Balancing Flow Control Valves. In lieu of balancing cocks specified above, the Contractor may provide automatic flow control valves to maintain constant flow, designed to be sensitive to pressure differential across the valve to provide the required opening. The valve shall be selected for the flow required and provided with a permanent tag carrying a permanent record of the factory-determined flow rate and flow control pressure levels. The valve shall control the flow within 5 percent of the tag rating. The valve shall be suitable for the maximum operating pressure of 125 lb/in^2, or 150 percent of the system operating pressure, whichever is the greater. Where the available system pressure is not adequate to provide the minimum pressure differential that still allows flow control, the system pump head capability shall be increased, and the cost of the increase shall be borne by the Contractor. The valve body shall be provided with tapped openings and pipe extensions shall be provided with quick connecting hose fittings for a portable meter to measure the pressure differential across the automatic flow control valve. The Contractor shall provide one portable meter with necessary accessory kit recommended for the project by the automatic valve manufacturer. The flow meter and flow control valve manufacturer or his authorized agent shall furnish a certificate to the effect that the system is hydronically balanced within plus or minus 5 percent of specified flows. The hydronic balancing tests shall be performed in the presence of the Contracting Officer.

4. APPROVAL OF MATERIALS AND EQUIPMENT. Within 20 days of receipt of notice to proceed, and before starting installation of any materials or equipment, the Contractor shall submit to the Contracting Officer for approval, in triplicate, layout drawings of the converter equipment rooms and lists of materials and equipment to be incorporated in the work. The layout drawings shall include a plan and elevations of the proposed piping and equipment, to establish that the equipment will fit the allotted spaces with clearance for installation and maintenance. If departures from the contract drawings are deemed necessary by the Contractor, details of such departures, including changes in related portions of the project and the reasons therefor, shall be submitted with the drawings. Where such departures require piping or equipment to be supported other than as shown, details shall be submitted that include loadings and type and kind of frames, brackets, stanchions or other necessary supports. Approved departures shall be made at no additional cost to the Government. The lists of materials and equipment shall be supported by sufficient descriptive material, such as catalog cuts, diagrams, or other data published by the manufacturer to demonstrate conformance to the specification requirements. Catalog numbers alone will not be acceptable. The data shall include the name and address of the nearest service and maintenance organization that regularly stocks repair parts. Listings of items that function as parts of an integrated system shall be furnished at one

ime. One copy of the layout drawings and of each list will be returned, marked to indicate approval. A list of the following items, with supporting data, shall be submitted at one time.

Converter
Converter foundations
Energy Storage Tank
Control equipment
Air charging and drain fittings

Data shall be submitted also for the following items within the allocated time but not necessarily at the same time:

Pumps
Gages
Solar Collectors
Thermometers

5. WORKMANSHIP.

5.1 General. Materials and equipment shall be installed in accordance with the approved recommendations of the manufacturer for obtaining conformance with the contract documents.

5.2 Welding. The Contractor is responsible for welding done by his organization and shall conduct the tests required to qualify the welding procedures he uses in the construction of weldments built in compliance with the requirements of Section IX of the ASME Boiler and Pressure Vessel Code and paragraph 127.5.3 of ANSI B31.1 to be used in the work on this project.

5.3 Qualification of Welder. The determination for the performance qualification is the responsibility of the Contractor and each welder or welding operator shall be qualified by tests using equipment, procedures and a base metal and electrode or filler wire from the same compatible group number that will be encountered in the applicable procedure. Welders or welding operators who make acceptable procedure qualification test welds will be considered performance qualified for the welding procedure used. Performance qualification shall be determined in accordance with Section IX of the ASME Boiler and Pressure Vessel Code and paragraph 127.5.3 of ANSI Standard B31.1. The Contracting Officer shall be notified 24 hours in advance as to the time and place of tests and wherever practical the tests shall be performed at the work site. The Contracting Officer shall be furnished a listing of the names and identification symbol as noted on the performance qualification test records to be used to identify the work performed by the welder or welding operator who, after completing a welded joint, shall identify it as his work by applying his assigned symbol for permanent record.

6. ELECTRICAL WORK. Electric-motor-driven equipment specified herein shall be provided complete with motors and controls. Electric equipment and wiring shall be in accordance with section: ELECTRICAL WORK, INTERIOR. Electrical characteristics shall be as indicated. Manual or automatic control and protective or signal devices required for the operation specified herein and any control wiring required for controls and devices but not shown on the electrical plans, shall be provided under this section. A complete electrical-connection diagram for each piece of mechanical equipment having more than one automatic or manual electrical-control device shall be submitted for approval.

7. CONVERTERS. Each converter shall be a multipass shell- and U-tube heat exchanger designed to provide hot water for the low temperature water heating system when supplied with higher temperature water from the mechanical room at the temperature and pressure shown. Each converter shall have an output capacity not less than shown. The converter shall be constructed in accordance with the ASME Code, Section VIII and TEMA Standards except as modified below. Variations from TEMA Standards may be approved on items such as tube sheet pass partition groove requirement, head pass partition thickness and shell thickness and the manufacturer's standard use if the manufacturer provides adequate data based on actual operating experience in a similar service to assure that the converter will provide satisfactory service. U-tube bundle shall be completely removable for cleaning and tube replacement. The bundle shall be supported by non-ferrous tube supports which maintain tubes in alinement. The bundle shall be free to expand within the shell. The shell shall be of seamless steel pipe or welded steel construction and the tubes in the U-tube bundle shall be seamless tubing as below specified, unless otherwise shown, standard fouling allowances as recommended by TEMA shall be provided. Where tubes are rolled into tube plates, leak-proof joints shall be provided. Saddles or cradles shall be provided to mount converter.

7.1 Low Temperature Water Converter. Converter shall have higher temperature water in the shell and low temperature water in the tubes. The shell side shall be designed for 225 lb/in^2 minimum working pressure and factory tested at not less than 300 lb/in^2. U-bend tubes shall be cupronickel or inhibited admirality constructed in accordance with ASTM B 395 and shall be suitable for the pressures and temperatures below specified. Tubes shall be designed for a working pressure of not less than 150 lb/in^2 at a maximum operating temperature of 150 degrees F. Converter tubes shall be factory tested at 200 lb/in^2. Low temperature water and relief valve connections shall be located in accordance with the manufacturer's standard practice. Unless otherwise shown, water velocity shall not exceed 6 ft/s. Tubes shall be not less than 3/4-inch outside diameter unless otherwise shown.

8. FOUNDATIONS for the converter, energy storage tank and for other heating equipment covered by this specification shall be constructed in strict accordance with the manufacturer's recommendation.

9. PRESSURE GAGES AND THERMOMETERS with approved pressure and temperature ranges shall be supplied for each converter and piping as indicated. Gages shall conform to Fed. Spec. GG-G-76 and thermometers shall conform to Fed. Spec. GG-T-321. A thermometer and pressure gage shall be provided on the higher temperature water supply and return mains. Thermometers shall be separable socket type.

10. PRESSURE AND VACUUM RELIEF VALVES.

10.1 Vacuum Relief Valve. An approved vacuum relief valve shall be installed in header piping to admit air during drain-down.

10.2 Pressure Relief Valves. One or more pressure relief valves, constructed in strict accordance with the ASME Code, Section VIII shall be provided for each converter. The aggregate relieving capacity of the relief valves shall be not less than that required by the above code. The discharge from the valves shall be installed as shown. Relief valves for low temperature water converter shall be installed on the converter shell.

11. DRAINS. A drain connection with 1-inch-hose gate valve or 3/4-inch hose bib shall be installed at the lowest point in the low temperature water return main near the converter. In addition, threaded drain connections with threaded cap or plug shall be installed wherever required for thorough draining of the low temperature water system.

12. CIRCULATING PUMPS for hot water shall be of the single-stage centrifugal type, self priming electrically driven. The pumps shall be supported on a concrete foundation on which installed as indicated. The pumps shall have a capacity not less than indicated, and shall be either integrally mounted with the motor or direct-connected by means of a flexible-shaft coupling on a cast iron or steel sub-base. The pump shaft shall be constructed of alloy steel, with sleeve bearings and glands of bronze, and the housing of close-grained cast iron. The motor shall be of a type approved by the manufacturer of the pump, or sufficient power for the service required, suitable for the available electric service, and shall conform to the requirements specified in section: ELECTRICAL WORK, INTERIOR. The motor shall be controlled by a suitable switch activated as below indicated in SPACE-TEMPERATURE CONTROLS.

13. TEMPERATURE CONTROLS.

13.1 General. The temperature control system shall be pneumatic, electronic, or electric, to provide the control sequences below specified. All control wiring and tubing required to complete the space-temeprature control system shall be included in this section of the specifications. Where pneumatic controls are furnished, an air compressor of the standard piston type, complete with tank, valves, gages, filters, and necessary appurtenances, shall be provided. Air lines shall consist of suitable tubing with airtight fittings. The air compressor and tank shall be located as directed. The pneumatic control system shall conform to ANSI B19.

13.2 Water-Temperature Controls.

13.2.1 Water-Temperature Control. The converter shall be maintained at a fairly constant temperature by means of a water control valve specified below.

13.2.2 Room thermostats shall be as specified in section: AIR CONDITIONING EQUIPMENT (HEAT PUMP).

14. CONTROL VALVES AND CONTROLLER.

14.1 Water-Temperature Controller shall be as detailed on drawings and described in sequence of operation.

14.2 Low Temperature Water Control Valves. Control valves shall be two-way pattern of the modulating type as indicated for the sequence below specified. Valve bodies shall be rated for service as noted above. Valves shall be tight closing type. Valve actuator for LTW shall be the reversible diaphragm and piston actuated. Ambient temperature range is 25-150 degrees F. Body shall be cast brass globe type with screwed connections. Packing shall be U-cup synthetic elastomer. Valve shall have close-off rating for pressures and temperatures of approximately 280 degrees F and 150 lb/in^2g inlet and 280 degrees F and 150 lb/in^2g on return side. Each valve for modulating service shall have a contoured plug with removable disks, and each valve shall be provided with valve-stem travel indicator or means of indicating position of the valve, as specified below in paragraph "Control Indicating Devices."

14.3 Control Indicating Devices. Each controller, except space thermostats, shall be provided with a permanent device to indicate exact point at which controller is operating within the modulating range.

15. ENERGY STORAGE TANK.

15.1 Design Conditions. Design and fabrication of the storage tank shall be as required to obtain an ASME non-pressure code stamp for the following operating conditions.

15.1.1 Operating Pressure will be 75 pounds per square inch gage.

15.1.2 Operating Temperature will be 200 degrees F.

15.1.3 Service - Water pH approximately 8.0.

15.1.4 Configuration - 1158 gallons minimum, horizontal cylindrical tank as shown on the drawings, buried underground.

15.2 Material.

15.2.1 Tank shell including heads and manhole shall be black steel as hereinbefore specified.

15.2.2 Inlet Diffusers shall be fabricated as shown on the drawings of corrosions resisting steel pipe as hereinbefore specified.

15.3 Accessories.

15.3.1 Manhole shall be provided at the top of the tank. Construction shall be flanged and gasketed as indicated on the drawings with all pipe connections indicated. The manhole cover and piping connections thereto shall be fabricated to facilitate ease of removal.

15.3.2 Inlet Diffusers shall be as indicated on the drawings. Location in the tank shall be as indicated on the drawings with final coordination of exact location the responsibility of the Contractor.

15.3.3 Support Legs shall be as indicated with two piece construction to facilitate handling.

15.3.4 Lifting Lugs shall be provided as required to facilitate handling and shall be of sufficient length to allow lifting after the tank has been insulated as specified in section: THERMAL INSULATION FOR MECHANICAL SYSTEMS.

15.3.5 Vent Connection shall be black steel pipe of the size indicated.

15.4 Concrete Manhole shall be constructed in strict accordance with the drawings and as specified in section: CONCRETE.

15.5 Insulation shall be as specified in section: THERMAL INSULATION FOR MECHANICAL SYSTEMS.

16. PIPING. Unless otherwise specified herein, pipe and fitting shall conform to the requirements of ANSI B31.1, Section 1. Pipe shall be cut accurately to measurements established at the jobsite, worked into place without springing or forcing, and properly clear windows, doors, and other openings. Cutting or other weakening of the building structure to facilitate piping installation will not be permitted. Pipes shall have burrs removed by reaming, and shall be so installed as to permit free expansion and contraction without causing damage to building structure, pipe, joints, or hangers. Changes in direction shall be made with fittings, except that bending of pipe up to 4 inches will be permitted, provided a pipe bender is used and wide sweep bends are formed. The center line radius of bends shall be not less than 6 diameters of the pipe. Bent pipe showing kinks, wrinkles, flattening or other malformations will not be accepted. Vent pipes shall be installed through the roof as indicated and shall be flashed as below specified. Unless otherwise indicated, horizontal supply mains shall pitch down in the direction of flow with a grade of not less than one inch in 40 feet. Open ends of pipelines and equipment shall be properly capped or plugged during installation to keep dirt or other foreign materials out of the systems. Pipe not otherwise specified shall be uncoated. Unless otherwise specified or shown, final connections to appliances shall be made with malleable-iron unions for steel pipe 2-1/2 inches or less in diameter, and with flanges for pipe 3 or more inches in diameter. Unions for copper pipe or tubing shall be brass or bronze. Connections between ferrous and copper piping shall be electrically isolated from each other with dielectric unions as specified below.

16.1 Low Temperature Water Piping. Piping shall be steel, conforming to ASTM A 53, Grade A, standard weight, black; ASTM A 120, standard weight, black; Fed. Spec. WW-P-406, weight A, Class 1; or Fed. Spec. WW-P-404, Grade A, standard weight.

16.2 Low Temperature Water Fittings. Fittings shall be black, malleable-iron or steel type. Fittings adjacent to valves shall suit valves specified. Reducing fittings shall be used for changes in pipe sizes. In horizontal lines, reducing fittings shall be the eccentric type to maintain the bottom of the adjoining pipes at the same level.

16.3 Vent Piping and Fittings. Piping shall be steel, conforming to: ASTM A 53, Grade A, standard weight, black; ASTM A 120, standard weight, black; Fed. Spec. WW-P-406, weight A, Class 1; or Fed. Spec. WW-P-404, Grade A, stndard weight, black. Fittings shall be black malleable-iron to suit piping.

16.4 Gage Piping. Piping shall be copper tubing conforming to Fed. Spec. WW-T-799, Type K or L for low temperature water.

16.5 Joints. Joints between sections of, and between, pipe or tubing and fittings shall be threaded, flanged, welded, flared and sweated as specified below. Except as otherwise specified, fittings used on steel pipe shall be threaded for fittings one inch and smaller, threaded or welded for fittings 1-1/4 inches. All joints between sections of copper tubing or pipe shall be flared or sweated as below specified. Pipe and fittings 1-1/4 inches and installed in inaccessible conduits or trenches beneath concrete floor slabs shall be welded. Unless otherwise specified, connections to equipment shall be made with black malleable iron unions for pipe 1-1/4 inches or smaller in diameter.

16.5.1 Low temperature water piping systems may have threaded, welded, flanged or flared and sweated joints as applicable and as specified.

16.5.2 Threaded joints shall be made with tapered threads properly cut, and shall be made perfectly tight with a stiff mixture of graphite and oil or with polytetrafluoroethylene tape conforming to Mil. Spec. MIL-T-27730, applied to the male threads only, and in no case to the fittings.

16.5.3 Flanged joints or unions shall be provided in each line immediately preceding the connection to each piece of equipment or material requiring maintenance such as coils, pumps, control valves and similar items. Flanged joints shall be faced true, provided with gaskets, and made perfectly square and tight. Full-faced gaskets shall be used with cast iron flanges, and all gaskets shall be as thin as the finish of the flange face permits. Gaskets for high temperature water shall be metallic asbestos type.

16.5.4 Dielectric unions shall be provided between ferrous and nonferrous piping to prevent galvanic corrosion on low temperature water. The dielectric unions shall meet the requirements for tensile strength of pipe fittings in accordance with Fed. Spec. WW-U-531 and shall be suitable for temperatures and pressures encountered. The dielectric unions shall have metal connections on both ends of union. The ends shall be threaded, brazed or soldered to match adjacent piping. The metal parts of the union shall be separated so that the electrical current is below one percent of the galvanic current which would exist with metal-to-metal contact. Dielectric unions will not be required between nonferrous piping or fittings and stainless steel tubing.

16.6 Connections to Equipment. Supply and return connections shall be provided by the Contractor unless otherwise shown. Valves and traps shall be installed in accordance with the manufacturer's recommendations, and in an acceptable manner. Unless otherwise indicated, the size of the supply and return pipes to each piece of equipment shall not be smaller than the connections on the equipment.

16.6.1 Low Temperature water, unless otherwise indicated, shall be made with malleable-iron unions for piping 1-1/4 inches or less in diameter.

16.7 Branch Connections. Branches shall be taken from the top of supply mains at an angle of 45 degrees above the horizontal, unless otherwise indicated or specified. Branches from the return mains shall be taken from the top or side unless otherwise indicated or specified. Connections shall be made carefully to insure unrestricted circulation, eliminate air pockets; and permit the complete drainage of the system. Changes in horizontal pipe sizes shall be made through eccentric reducing fittings.

16.7.1 Low temperature water branches from mains shall be taken off as specified above. Branches taken from the tops of mains shall pitch up and those taken from bottom shall pitch down from the mains, with a grade of not less than one inch in 10 feet.

16.8 Risers. The location of risers is approximate. Exact locations of the risers shall be as approved.

16.9 Hangers and Supports.

16.9.1 Pipe Supports and Structural Reinforcement. Hangers used for the support of piping of 1-1/4 inch nominal pipe size and smaller shall be fabricated to permit adequate adjustment after erection while still supporting the load. Expansion compensations shall be installed, as shown, to direct the expansion movement and to prevent buckling, swaying and undue strain. All piping, headers, and equipment shall be coordinated with the Contractor responsible for the structural work, and where necessary specific provisions shall be made for their support. Structural steel required for reinforcement to properly support piping, headers, and equipment but not shown on the structural plans shall be provided under this section. Material used for supports shall be as specified under section: STRUCTURAL STEEL.

16.9.2 Pipe hangers, inserts, and supports conforming to Fed. Spec. WW-H-171 shall be provided. Inserts shall be Type 18 or 19 and shall be secured firmly to concrete forms in correct locations and installed before the concrete is poured. Beam clamps shall be Types 20, 21, 28, 29, 30, or 31.

16.9.3 Horizontal Piping. The maximum spacing between pipe supports for straight runs shall be not greater than 8'0". Pipe hangers or supports shall be spaced not over 5 feet apart at heavy fittings and valves such as pressure-reducing and zone-control valves. A hanger shall be installed not over one foot from each change in direction of piping. For suspended piping under 4 inches, hangers, Types 5, 6, 9, 11 or 12, and turnbuckles, Type 13 or 15, shall be used. Brackets for support of piping at wall shall conform to Type 35. Metallic pipes supported on beams or brackets shall be provided with a minimum 1/2-inch graphite slide plate and minimum 3-1/2-inch thick

cradle, with high temperature resilient pad inserted between pipe and cradle. The graphite slide plate shall be cemented to the beam or bracket and the graphite cradle shall be strapped to the pipe using 3/4-inch by 0.020 inch stainless steel straps.

16.9.4 Vertical Piping. Supports shall be located as indicated or as directed and shall be Type 8.

16.9.5 Piping in Trenches. Pipes shall rest on suitable wall or floor supports with rollers. Floor rollers shall be Type 45 or 46.

16.10 Pipe Sleeves, General. Pipes passing through concrete or masonry walls, concrete floors or roofs shall be provided with pipe sleeves fitted into place at the time of construction. Sleeves shall not be installed in structural members except where indicated or approved. All rectangular and square openings shall be as detailed on the drawing. Each sleeve shall extend through its respective wall, floor, or roof, and shall be cut flush with each surface. Unless otherwise indicated, sleeves shall provide a minimum of 1/4-inch all around clearance between bare pipe and sleeves or between jacket over insulation and sleeves. Sleeves in bearing walls, waterproofing membrane floors, and wet areas shall be steel pipe or cast iron pipe. Sleeves in nonbearing walls, floors, or ceilings may be steel pipe, cast iron pipe, or galvanized sheet metal with lock-type longitudinal seam and of the metal thickness indicated. Except in pipe chases or interior walls, the annular space between pipe and sleeve or between jacket over insulation and sleeve shall be sealed as indicated and specified in section: CALKING AND SEALANTS.

16.10.1 Pipes passing through waterproofing membranes shall be installed through a 4-pound lead-flashing sleeve, or a 16-ounce copper sleeve, or a 0.032-inch thick aluminum sleeve, each within an integral skirt or flange. Flashing sleeve shall be suitably formed, and the skirt or flange shall extend 8 or more inches from the pipe and be set over the roof or floor membrane in a troweled coating of bituminous cement. The flashing sleeve shall extend up the pipe a minimum of 2 inches above the highest flood level of the roof or a minimum of 10 inches above the roof, whichever is greater, or 10 inches above the floor. The annular space between the flashing sleeve and the bare pipe or between the flashing sleeve and the metal-jacket-covered insulation shall be sealed as indicated. At the Contractor's option, pipes up to and including 10 inches ind diameter passing through roof or floor waterproofing membrane may be installed through a cast iron sleeve with calking recess, anchor lugs, flashing clamp device, and pressure ring with brass bolts. Waterproofing membrane shall be clamped into place and sealant shall be placed in the calking recess.

16.10.2 As an alternate to calking and sealing the annular space between the pipe and flashing sleeve or metal-jacket-covered insulation and the flashing sleeve, counterflashing may be accomplished by utilizing.

(a) A standard roof coupling for threaded pipe up to 6 inches in diameter.

(b) The lead-flashing sleeve for dry vent and turning it down into the pipe to form a waterproof joint.

(c) A tack-welded or banded-metal rain shield around the pipe, sealed as indicated.

16.10.3 Pipes passing through wall waterproofing membrane shall be sleeved as described above under paragraph "Pipe Sleeves, General." In addition, a waterprooofing clamping flange shall be installed as indicated.

16.10.4 Where pipes pass through fire walls, fire partitions, or floors, a fire seal of mineral wool or similar noncombustible material shall be provided. At floors, the fire steel shall be placed behind the backup material.

16.10.5 Escutcheons shall be provided at all finished surfaces where exposed piping, bare or insulated, passes through floors, walls or ceilings except in boiler, utility or equipment rooms. Excutcheons shall be fastened securely to pipe covering and shall be chromium-plated iron or chrominum-plated brass, either one-piece or split pattern, held in place by internal spring tension or setscrew.

16.11 Anchors. Anchors shall be provided wherever necessary or indicated to localize expansion or prevent undue strain on piping. Anchors shall consist of heavy steel collars with lugs and bolts for clamping and attaching anchor braces, unless otherwise indicated. Anchor braces shall be installed in the most effective manner to secure the desired results, using turnbuckles where required. Supports, anchors, or stays shall not be attached in places where they will injure the construction during installation or by the weight or expansion of the pipeline. Detailed drawings of pipe anchors shall be submitted for approval before installation.

16.12 Pipe Expansion. The expansion of supply and return pipes shall be provided for by changes in the direction of the run of pipe or by expansion loops or by expansion joints as indicated. Low temperature water expansion joints may be one of the types below specified.

16.12.1 Slip-tube type expansion joints shall be used for low temperature water systems only and shall be installed where indicated. The joints shall provide for either single or double slip of the connected pipes as indicated and for the traverse indicated. The joints shall be designed for a working temperature and pressure suitable for the application and in no case less than 125 lb/in^2. The joints shall be in accordance with applicable requirements of Mil. Spec. MIL-E-17814, Type I or III. End connections shall be threaded. Anchor bases or support bases shall be provided as indicated or require. Initial setting shall be made in accordance with the manufacturer's recommendations to allow for ambient temperature at time of installation.

17. INSTALLATION OF VALVES AND EQUIPMENT. Valves shall be installed at the locations shown where specified, and where required for the proper functioning of the system as directed. Gate valves shall be used unless otherwise shown, specified, or directed. Valves shall be installed with their stems horizontal or above. Valves used with ferrous piping shall have threaded or flanged ends, sweat-type connections for copper tubing.

17.1 Thermometer Socket. A thermometer well shall be provided in each return line for each circuit in multicircuit systems.

17.2 Air Vents. Vents shall be installed where indicated, and on all high points and piping offsets where air can collect or pocket. Discharge pipes from the vent shall be run to a point designated.

17.3 Low temperature water air vents shall be of the automatic type. The vent shall remain open until water rises in the tank to a predetermined level, at which time it shall close. An overflow tube of 1/8-inch minimum diameter shall be run from the vent to a floor drain or a point designated. The inlet to the air vent shall be provided with a manual isolation valve.

18. STRAINERS. Basket or Y-type strainers shall be of the same size as the pipelines in which they are installed. The strainer bodies shall be heavy and durable, of the best grade gray cast iron, with bottoms drilled and plugged. The bodies shall have arrows clearly cast on the sides to indicate the direction of flow. Each strainer shall be equipped with an easily removable cover and sediment basket. The basket shall be of sheet brass not less than 0.025-inch in nominal thickness and shall have perforations to provide a net free area through the basket of at least 4 times that of the entering pipe. The flow shall be into the basket and out through the perforations.

19. INSULATION shall be as specified in section: THERMAL INSULATION FOR MECHANICAL SYSTEMS.

20. PAINTING AND FINISHING.

20.1 Factory Coating. Equipment and component items, when fabricated from ferrous metal, shall be factory-finished with the manufacturer's standard finish.

20.2 Field Painting. Painting required for surfaces not otherwise specified and finish painting of items only primed at the factory are specified in section: PAINTING, GENERAL.

20.3 Energy Storage Tank.

20.3.1 Exterior Surfaces. As soon after the completion of all testing and corrective construction, all exterior steel surfaces of the tank shall be prepared and painted. Immediately prior to painting, surfaces shall be cleaned in accordance with SSPC Surface Preparation Specification SSPC-SP3. The tank shall then be painted with two coats of high temperature (up to 400 degrees F) paint conforming to Federal Specification TT-E-496, type II. The minimum dry film thickness of the 2 coat system shall be 8 mils. All paints used shall be guaranteed by the manufacturer not to blister, peel or deteriorate in any manner when subjected to continuous temperature of 200 degrees F. The surface preparation, application and curing shall be strictly in accordance with the manufacture's recommendations for the service indicated.

20.3.2 Interior Surfaces. Line interiors with factory applied epoxy paint as recommended by paint manufacturer for use intended, minimum 200 degrees F treated water with pH greater than 7.0 at least two coats of minimum 6 mil thickness per coat.

20.4 Shop Paint which has been damaged in shipping or field erection shall be repaired by blast cleaning in accordance with Specification SSPC-SP6, and the cleaned surface painted as hereinbefore specified.

21. OPERATIONS AND MAINTENANCE INSTRUCTIONS in printed form, covering each item of equipment shall be glass-covered, framed, and posted where directed. Upon completion of the work, and at a time designated by the Contracting Officer, the services of a competent engineer shall be provided for a period of not less than one day to instruct a representative of the Government in the operation and maintenance of the heating system.

22. TESTS AND BALANCING. Before thermal insulation is installed, the entire low temperature heating system, including converter, energy storage tank, and fittings, shall be hydrostatically tested and proved tight under a pressure of 45 lb/in^2g for a period of 4 hours. Higher temperature water piping circuit, including high pressure side of the converter shall be hydrostatically tested at 1-1/2 times the designed operating pressure for a minimum of 4 hours. Low temperature heating systems shall be completely balanced by a qualified engineer. The Contractor shall submit a complete balancing procedure for approval. All required piping, valves, and connections required to balance and test systems shall be provided by the Contractor. Upon completion and prior to acceptance of the installation, the Contractor shall subject the solar heating system to such operating tests as may be required to demonstrate satisfactory functional and operating efficiency. Operating tests shall cover a period of not less than 6 hours for each system and all tests shall be conducted at such times as may be directed. All instruments, test equipment, and test personnel required to balance systems and conduct tests properly shall be provided by the Contractor, and all steam, water, and electricity required will be furnished by the Government.

22.1 Shop Testing and Inspection shall conform strictly to the requirements of the ASME Code for Pressure Vessels Section VIII. All inspections of welds and hydrostatic testing shall be performed prior to cleaning and painting specified hereinbefore. The results of all inspections and tests shall be submitted in writing to the Contracting Officer along with details of all fabrication and corrective measures required to remedy defects discovered as a result of said inspections and tests shall be an ASME certification stamp for the tank. Satisfactory evidence that the tank has been stamped and approved by ASME shall be submitted to the Contracting Officer.

22.2 Field Testing. After installation of the tank and connection of related piping and prior to backfilling or insulation of piping connections to the tank, the entire system of energy storage tank and piping connected thereto shall be subjected to a pneumatic test. The pneumatic test pressure shall be 125 p.s.i.g., said pressure to be maintained without addition of compressed air for a period of not less than 24 hours. An allowance for pressure change due to ambient temperature change will be made in accordance with the ideal gas laws. All joints in the system shall be tested with a solution of soap and water while the system is at test pressure. Any leak found in the system shall be properly repaired and the pressure test repeated until no further leaks occur. All tests shall be conducted in the presence of the Contracting Officer and reports of all tests shall be submitted in quadruplicate to the Contracting Officer. The Contractor shall furnish all instruments, test equipment and test personnel required for the tests; the Government will furnish the necessary electricity for the tests.

23. CLEANING OF CONVERTER ENERGY STORAGE TANK AND PIPING. After the hydrostatic tests have been made and prior to the operating tests, the converter and piping shall be thoroughly cleaned by filling the system with a solution of one pound of caustic soda or 3 pounds of trisodium phosphate per 100 gallons of water. The water shall be heated to approximately 150 degrees F, and the solution circulated in the system for a period of 48 hours, then drained and the system thoroughly flushed out with fresh water.

* * * * *

SECTION 15C

THERMAL INSULATION FOR MECHANICAL SYSTEMS

Index

1. Applicable Publications
2. General
3. Fire Hazard Rating
4. Materials
5. Approval of Materials
6. Installation
7. Duct Insulation and Vapor Barrier for Air Conditioning Duct
8. Duct Finish
9. Aboveground Pipe Insulation
10. Belowground Pipe Insulation
11. Painting and Finishing
12. Steel Solar Hot Water Storage Tank (Underground)

1. APPLICABLE PUBLICATIONS. The following publication of the issues listed below, but referred to thereafter by basic designation only, form a part of this specification to the extent indicated by references thereto.

1.1 Federal Specifications (Fed. Spec.).

L-P-535D	Plastic Sheet (Sheeting); Plastic Strip; Vinyl Chloride Polymer and Vinyl Chloride-Vinyl Acetate Copolymer, Rigid
HH-B-100b	Barrier Material Vapor (Fire Retardant, Reinforced for Pipe and Duct Insulations, Low Temperature)
HH-I-558B Am-2	Insulation, Blocks, Boards, Blankets, Felts, Sleeving Pipe and Tube Covering, and Pipe Fitting Covering, Thermal (Mineral Fiber, Industrial Type)
HH-I-1751/3A	Insulation Sleeving, Thermal, Pipe Covering (Cellular Glass)
SS-C-160A	Cements, Insulation Thermal
WW-H-171D	Hangers and Supports, Pipe

1.2 Military Specifications (Mil. Spec.).

MIL-A-24179A & Am-1	Adhesive, Flexible Unicellular - Plastic Thermal Insulation
MIL-A-3316B & Am-2	Adhesives, Fire-Resistant, Thermal Insulation
MIL-C-19565B & Am-1	Coating Compounds, Thermal Insulation Pipe Covering – Fire- and Water-Resistant, Vapor-Barrier and Weather-Resistant
MIL-C-20079E	Cloth, Glass; Tape, Textile Glass; and Thread, Glass
MIL-C-82052A (YD)	Coating Compound; Waterproofing, Mineral-Filled, Solvent-Type, Asphalt Base
MIL-P-15280G	Plastic Material, Unicellular (Sheets and Tubes)

1.3 American Society for Testing and Materials (ASTM) Publications.

A 167-74	Stainless and Heat-Resisting Chromium-Nickel Steel Plate, Sheet, and Strip
B 209-76	Aluminum-Alloy Sheet and Plate

D 774-67(R 1971)	Bursting Strength of Paper
D 781-68(R 1973)	Puncture and Stiffness of Paperboard, Corrugated and Solid Fiberboard
D 828-60(R 1971)	Tensile Breaking Strength of Paper and Paperboard
D 1763-67	Standard Specification for Epoxy Resin
E 84-75	Surface Burning Characteristics of Building Materials
E 96-66(R 1972)	Water Vapor Transmission of Materials in Sheet Form

1.4 National Fire Protection Association (NFPA), Code.

No. 255-1972	Surface Burning Characteristics of Building Materials

1.5 Underwriters' Laboratories (UL), Publication.

UL 723	Test Method for Fire Hazard Classification of Building Materials (January 1971)

2. GENERAL. General Requirements for field-applied insulation are as stated herein. Factory-applied insulation is specified under the equipment, duct or piping to be insulated, as detailed in other sections of these specifications.

2.1 Identification of Material. All packages or standard containers of insulation, jacket material, cements, adhesives, and coatings delivered for use, and all samples required for approval shall have a manufacturer's stamp or label attached giving the name of the manufacturer and brand, and a description of the material.

2.2 Verification of Dimensions. The Contractor shall visit the premises to familiarize himself thoroughly with all details of the work and working conditions, and verify all dimensions in the field, and shall advise the Contracting Officer of any discrepancy before starting the work. The Contractor shall be responsible specifically for the coordination and proper relation of his work to the building structure and to the work of all trades.

3. FIRE HAZARD RATING.

3.1 Requirements. Except for the materials listed below, all insulation materials, adhesives, coatings and other accessories shall have a fire hazard rating not to exceed 25 for flame spread and 50 for fuel contributed and smoke developed. Excepted are:

a. Unicellular plastic insulation.

b. Nylon anchors for securing insulation to ducts.

c. Factory premolded one-piece PVC fitting and valve covers.

d. Weatherproof coating.

e. Asphaltic mastic.

3.2 Testing Ratings. Test ratings shall be determined by ASTM E 84, NFPA No. 255 or UL 723.

3.3 Label or Listing. Underwriters' Laboratories, Inc., label or listing, satisfactory test results from the National Bureau of Standards, or satisfactory certified test report from an approval testing laboratory will be required. The label or listing will indicate that fire hazard ratings do not exceed those specified for materials proposed for use. When insulation, vapor barrier covering, wrapping materials and adhesives are applied separately in the field, each item shall be tested individually. When insulation, vapor barrier covering, wrapping materials, and adhesives are factory composite systems, they shall be tested as an assembly.

3.4 Flameproofing. Flameproofing treatments subject to deterioration due to the effect of moisture or high humidity, are not acceptable.

4. MATERIALS shall conform to the respective publications and other requirements specified below. All materials shall be the products of manufacturers regularly engaged in the manufacture of such products. All materials shall be compatible and shall not corrode, soften, or otherwise attach surfaces to which applied in either the wet or dry state.

4.1 Adhesives. Mil. Spec. MIL-A-3316, Class 1 or 2 as specified below. Qualification for listing is not required.

4.2 Contact Adhesive. Mil Spec. MIL-A-24179, Type II, Class 1. Qualification for listing is not required.

4.3 Asphaltic Mastic. Mil. Spec. MIL-C-82052.

4.4 Bands.

4.4.1 On Insulation. 3/4 by 0.015 inch thick galvanized steel.

4.4.2 On Aluminum Jacket. 3/8 by 0.020 inch thick aluminum.

4.4.3 On Insulation Belowground. 3/4 by 0.020 inch thick stainless steel.

4.5 Corner Angles. Minimum 28 gage, 1 x 1-inch aluminum adhered to 2 x 2-inch heavy kraft paper.

4.6 Cements, Insulation, Thermal. Fed. Spec. SS-C-160.

4.7 Duct Insulation for Air Conditioning Duct. Fed. Spec. HH-I-558, Form B, Type I, Class 6, or Class 7; Fed. Spec. HH-I-558, Form A, Class 2. Density shall conform to requirements specified below.

4.8 Equipment Insulation, Hot Equipment (Above 60°F).

4.8.1 Cellular Glass (Up to 250°F Service). Fed. Spec. HH-I-551, Type I, or Fed. Spec. HH-I-1751/3A, Type II.

4.8.2 Mineral Fiber (Up to 1,800°F Service). Fed. Spec. HH-I-558, Form A, Class 2, 3, 4 or 5 as required for temperature encountered, minimum density 3 lb/ft^3.

4.9 Glass Cloth. Mil. Spec. MIL-C-20079, Type I, Class 1, untreated.

4.10 Insulation Jackets.

4.10.1 General. Jackets shall comply with fire hazard classifications as specified in paragraph, FIRE HAZARD RATING. Insulation jackets shall not support mold growth.

4.10.2 Vapor Barrier Jackets.

4.10.2.1 Vapor Barrier Jacket for Pipe and Equipment. Fed. Spec. HH-B-100, Type I.

4.10.2.2 Vapor Barrier Jacket for Air-Conditioning Duct. Fed. Spec. HH-B-100, Type I for duct in equipment room and exposed area subject to damage and Type I or II in all other areas.

4.10.2.3 Vapor barrier jackets used on insulation exposed in finished areas shall have white finish suitable for painting without sizing.

4.10.3 Aluminum Jacket. Corrugated, embossed or smooth sheet, 0.016-inch nominal thickness; ASTM B 209, temper H14, Type 3003, 5005, or 5010. Jackets shall be provided with moisture barrier except when applied over vapor barrier.

4.10.4 Presized Glass Cloth Jacket. Puncture resistance not less than 100 Beach units, ASTM D 781. Mullen bursting strength shall be not less than 200 lb/in^2 when tested in accordance with ASTM D 774. The presized glass cloth shall be mildew-proof and weigh not less than 7.8 ounces per square yard. Integral vapor barrier when specified shall have a perm rating not to exceed that required for vapor barrier jacket for the applicable service.

4.10.5 Vinyl-Coated Jacket. Perm rating not more than 0.02, ASTM E 96, procedure A. Puncture resistance not less than 50 Beach units, ASTM D 781. Tensile strength not less than 35 pounds per inch of width, ASTM D 828. Jacket shall be a vinyl-coated white washable laminate of aluminum foil and kraft reinforced with a glass fiber scrim. Jacket shall remain flexible with no evidence of cracking or delamination at temperature between 0° and 150°F.

4.11 Pipe Insulation for Belowground Pipelines. Fed. Spec. HH-I-1751/3A, Type I, Class 1.

4.12 Pipe Insulation for Hot Pipelines (Above 60°F).

4.12.1 Mineral Fiber. Fed. Spec. HH-I-558, Form D, Type III, Class 12 or 13 as suitable for the intended use, except that Form B, Type I, Class 6, 7 or 8 as suitable for service encountered may be used with premolded one-piece PVC fitting cover.

4.13 Polyvinyl Chloride Fitting Covers. Fed. Spec. L-P-535, Composition A, Type II.

4.14 Staples. Outward clinching type, monel or ASTM A 167, Type 304 or 316 stainless steel.

4.15 Unicellular Plastic Insulation. Mil. Spec. MIL-P-15280, Form T or S as required for the application. When used interior to a building, material shall meet the fire hazard requirements of paragraph FIRE HAZARD RATING except that smoke-developed and fuel-contributed ratings shall not apply.

4.16 Vapor Barrier Coating. Mil. Spec. MIL-C-19565, Type II. Color shall be white and qualification for listing is not required.

4.17 Weatherproof Coating. Mil. Spec. MIL-C-19565, Type I. Qualification for listing is not required.

4.18 Wire. 16 gage, soft annealed galvanized wire.

4.19 Resin Coatings. Epoxy resin coating shall conform to ASTM D 1763-67.

4.20 Resin Block. Epoxy resin block shall conform to ASTM D 1763-67.

5. APPROVAL OF MATERIALS.

5.1 General. Within 20 days of receipt of notice to proceed, and before starting installation of any insulation materials, the Contractor shall submit to the Contracting Officer for approval a list of insulation materials to incorporate as required in the work by special conditions. Thest of materials shall be supported by sufficient descriptive matter such as catalogs, cuts, diagrams, performance curves, installation recommendations and other data published by the manufacturer to demonstrate conformance to the specification requirements. All materials furnished under this section of the specifications shall be submitted at one time. One copy of each list will be returned, marked to indicate approval.

5.2 Display Sample Cutaway Sections. After approval of materials and prior to insulating any piping, the Contractor shall prepare display sample sections of piping insulated in accordance with contract requirements. All display sample sections shall be inspected and approved at the job site by the Contracting Officer. Approved display sample sections shall remain on display on the job site at all times during the construction period. Upon completion of construction the display sample sections will be returned to the Contractor. Display sample sections shall be provided for each type of insulation used on the job, and for hot pipelines and cold pipelines both interior and exterior when the same type of insulation is used for these services. Display sample sections shall include as a minimum an elbow or tee, a valve, a hanger with protection shield and insulation insert at support point, method of fastening and sealing insulation at longitudinal lap, circumferential lap, butt joints at fittings and on pipe runs, and termination points. The specified insulation, adhesives, and coatings called for the contract specifications shall be stenciled on display sample sections.

6. INSTALLATION. Except as specified below, all material shall be installed in accordance with the recommendations of the manufacturer for obtaining conformance to the contract documents. Insulation materials shall not be applied until tests specified in other sections of these specifications are completed, all foreign material such as rust, scale, or dirt has been removed, and the surfaces are clean and dry. Insulation shall be kept clean and dry at all times.

7. DUCT INSULATION AND VAPOR BARRIER FOR AIR CONDITIONING DUCT.

7.1 General. Supply and return ducts including flexible runouts, plenums, and duct-mounted coil casings, headers, and return bends shall be covered with insulation, except as specified below. Factory fabricated double walled internally insulated duct, glass fiber duct, shall not be insulated externally. Duct shown to be acoustically lined shall not be insulated externally. Supply and return ducts in air-conditioned spaces will not be insulated unless otherwise shown. Air-conditioned spaces shall be defined as those spaces directly supplied with conditioned air. Insulation for rectangular ducts shall be flexible type where concealed, minimum density 3/4 lb/ft^3 and rigid type where exposed, minimum density 3 lb/ft^3. Insulation for round ducts shall be flexible type, minimum density 3/4 lb/ft^3. Insulation on exposed ducts shall be provided either with factory applied presized glass cloth jacket finished with vapor barrier coating or factory applied vapor barrier jacket. Insulation on concealed duct shall be provided with factory or field applied vapor barrier jacket, or finished as specified above for exposed duct. All insulation jackets shall be tight with no fishmouths. Where the use of jacketing would result in fishmouths, or for exposed duct, wrinkles or fishmouths, vapor barrier coating finish shall be used. Jacketing and vapor barrier coating finish may be used in combination whery ductwork consists of regular and irregular shapes. Duct exposed to the weather shall be finished as specified in paragraph DUCT AND EQUIPMENT FINISH.

7.2 Thickness of Insulation Material.

7.2.1 Fresh-Air-Intake and Return Ducts. One-inch thick except that thickness shall be two inches where ducts are exposed to the weather.

7.2.2 Supply Ducts 1-1/2 inches thick.

7.3 Application. Duct insulation shall be continuous through sleeves and prepared openings. Duct insulation shall terminate at flexible connections. Vapor barrier materials shall be applied to form a complete, unbroken vapor seal over the insulation. Flexible type insulation shall be attached to the metal surface with Class 2 adhesive applied

around the perimeter of the duct in 6-inch wide strips on 12-inch centers. Flexible type insulation on the underside of rectangular ducts 24 inches wide and more shall be additionally secured with mechanical fasteners. Mechanical fasteners shall be located not more than 18 inches apart each way and not more than 18 inches from the corners of the duct. Ducts from 24 inches to 36 inches wide shall have one row of mechanical fasteners on 18 inch centers on the duct centerline. Mechanical fasteners shall be installed as recommended by the manufacturer and shall be capable of supporting a static load of 20 lbs for one hour at temperatures not less than 65°F, 72 hours after installation. Mechanical fasteners shall be suitable washers or clips on welded pins or metal, nylon or high impact plastic. Fasteners may be secured to the duct with waterproof adhesive specially designed for attachment to metal surfaces and in successful use for that purpose for at least 5 years. Method of installing welded pins shall not distort the duct or burn through or mar the inside surface of the duct. Fasteners which extend past the washer or clip shall be cut off close to the washer or clip. Rigid type insulation shall be installed with all joints tightly butted and shall butt tightly against standing ribs or seams. Rigid type insulation shall be secured in place with mechanical fasteners as specified for flexible type insulation except that fasteners shall be spaced not more than 12 inches apart each way and not more than three inches from the edges of insulation joints. In no case shall less than two rows of fasteners be provided per side of duct. Factory-applied jacket shall overlap not less than two inches at all joints, or shall be provided with strips of the same material as the jacket not less than 4 inches wide applied over the joints. Overlaps and strips shall be cemented with Class 2 adhesive and then secured with staples applied on 4-inch centers. All staples and seams shall then be sealed with a brush coat of vapor barrier coating. Vapor barrier coating finish shall be applied in 2 coats with glass cloth embedded between coats. Glass cloth shall overlap itself not less than 2 inches at all joints. Vapor barrier coating shall be applied to a minimum total dry film thickness of 1/16-inch with a minimum overlap of 2 inches over adjoining insulation jacket or uninsulated surface. In equipment rooms, when vapor barrier coating is used, all exposed corners of the insulation shall be protected with corner angles prior to the applications of vapor barrier coating. At jacket penetrations such as hangers, thermometers and damper operating rods, voids in the insulation shall be filled with vapor barrier coating and the penetration sealed with a brush coat of vapor barrier coating. Terminating points shall be sealed with vapor barrier coating including all pin, anchor, rib or standing seam penetrations; and all points where insulation terminates at equipment, or flexible connections. Vapor barrier coating shall extend not less than 2 inches beyond roof penetration, or termination point in all directions and shall be applied as required for vapor barrier coating finish. Field-applied vapor barrier jacket shall be attached to the insulation with Class 2 adhesive applied to the entire insulation surface. Amount of overlap, method of cementing, stapling and sealing overlaps, and method of sealing roof penetrations and insulation termination points shall be as specified for factory-applied jacket. Breakes in insulation vapor barrier jacket shall be repaired by replacing the damaged portion of insulation and sealing at the joints as described above or the vapor barrier jacket shall be repaired with a patch of the same material. The patch shall overlap the damaged portion by 1-1/2-inches. The overlap shall be cemented with Class 2 adhesive and secured with staples on 4-inch centers. Staples and the overlap joints of the patch shall be sealed with a brush coat of vapor barrier coating.

8. DUCT FINISH.

8.1 Duct Exposed to the Weather. Ducts shall be finished as specified for the applicable service in concealed areas prior to the application of weatherproofing finish. Cold equipment shall be finished as specified above prior to the application of weatherproofing finish.

9. ABOVEGROUND PIPE INSULATION.

9.1 General. Except as specified below or shown all aboveground, hot water heating, pipelines inside the structure shall be insulated as specified in paragraph "Hot Pipelines". Exterior piping shall be insulated as specified in paragraph "Piping Exposed to Weather". The following lines shall not be insulated: (a) Pipe used solely forfire protection; (b) Chromium-plated pipe to plumbing fixtures; (c) Piping to plumbing fixtures located in wall chases where space does not permit installation of sectional insulation.

9.2 Insulation on Pipes Passing Through Sleeves. Insulation shall be continuous through the sleeve. Aluminum jackets shall be provided over the insulation where calking is required. When penetrating interior walls, aluminum jacket when required shall extend not less than 2 inches beyond the sleeve on each side of the wall and shall be secured with a band on each side of the wall. When penetrating floors, aluminum jacket shall extend from a point below the backup material to a point 10 inches above the floor except when penetrating waterproofing membrane, the aluminum jacket shall extend to a point 2 inches above the flashing. The aluminum jacket shall be secured with a band at the floor and a band not more than one inch from the end of the jacket. Where flashing is provided, the jacket shall be secured with one band not more than one inch from the end of the jacket. When penetrating exterior walls, the aluminum jacket specified for piping exposed to the weather shall continue through the sleeve to a point 2 inches beyond the interior surface of the wall. When penetrating roofs, pipe shall be insulated as required for interior service up to the underside of the counter flashing and the end of the insulation shall be sealed with a vapor barrier coating. Insulation as required for piping exposed to the weather shall butt tightly against the top side of the counter flashing and the end of the insulation shall be sealed with weatherproof coating.

9.3 Insulation on Pipes Passing Through Hangers. Insulation shall be continuous through the hangers except that where protection saddles are used, insulation shall be neatly trimmed to fit around the saddle. At hangers where the pipe is supported by the insulation or an insulation insert, a galvanized metal protection shield shall be provided conforming to Fed. Spec. WW-H-171, Type 41. The length and gage thickness of the shield in all cases shall be as specified in WW-H-171 for use without inserts. Insulation at support points on pipe and tubing 2 inches and larger

shall consist of inserts of calcium silicate, cellular glass, treated wood blocks, prestressed molded glass fiber of minimum 9-pound density, or other approved material of the same thickness as adjacent insulation and not less than 9-pound density. Inserts shall have sufficient compressive strength to adequately support the pipe without compressing to a thickness less than the adjacent insulation. Insulation inserts shall be 180° arc and not less than the length of protection shields specified herein. The entire insert shall be covered with jacket material of the same appearance and quality as jacket on adjoining pipe insulation and shall overlap adjoining jacket by not less than 1-1/2 inches. Overlap shall be cemented with Class 2 adhesive, stapled, and on cold pipelines, the staples and seams shall be sealed with a brush coat of vapor barrier coating. A factory-fabricated protection shield unit combining metal shield, insulation insert and jacketing may be used, provided the component parts and installation conform to the requirements specified herein for the individual components.

9.4 Hot Pipelines (Above 60°F). Pipelines shall be covered with insulation. Insulation thickness shall be determined using the manufacturer's certified thermal conductivity, k, and the applicable Table I or II.

9.4.1 Insulation Jackets.

9.4.1.1 Pipe insulation in concealed areas such as pipe chases, crawl spaces and above suspended ceilings shall be covered with factory- or field-applied vapor barrier jacket or jacket specified below for pipe insulation in exposed areas.

9.4.1.2 Pipe insulation in exposed areas unless otherwise shown shall be covered with factory-applied presized glass cloth jacket or factory-applied vapor barrier jacket. Where shown, insulation shall be covered with factory- or field-applied aluminum jacket. Where aluminum jacket is provided, insulation on flanges, couplings, valves and fittings shall be covered with aluminum jacket as specified below.

9.4.1.3 Exposed hot water piping and drain piping underneath the lavatories shall be insulated to protect paraplegic from accidental burn.

TABLE I. REQUIRED THICKNESS OF PIPE INSULATION FOR HOT WATER HEATING AND DOMESTIC HOT WATER.

k = thermal conductivity (average) Btu/h/sq. ft./degree/inch
Thickness at a mean temperature of 100°F.

Thermal conductivity, k	2 or less
0.25	1.0
0.30	1.0
0.35	1.0
0.40	1.0
0.45	1.0
0.50	1.0
0.55	1.5
0.60	1.5

9.4.2 Application. Insulation shall be applied to the pipe with joints tightly butted. For presized glass cloth or vapor barrier jackets, longitudinal laps shall overlap not less than 1-1/2 inches. Butt joints shall be wrapped with a 3-inch wide strip of the same material as the jacket. But strips and jacket laps shall be cemented with Class 2 adhesive and be additionally secured with staples on 4-inch centers. Adhesive may be omitted in concealed areas. At the option of the Contractor, a factory self-sealing system may be used when the temperature at the time of application is between 40° and 120°F. When a factory self-sealing system is used, staples may be used to additionally secure the jacket laps and butt strips. If fishmouths occur, the Contractor shall either replace those portions of the insulation where the fishmouths occurred or, cement the fishmouths closed with Class 2 adhesive and additionally secure the fishmouths with staples. Breaks shall be patched by wrapping a strip of jacketing material around the pipe and cementing and stapling as specified for butt strips. Patches shall extend along the pipe not less than 1-1/2 inches past the break in both directions. Aluminum jacket when required shall overlap not less than 2 inches at all joints and shall be secured in place with bands applied at the circumferential laps at intervals recommended by the manufacturer but not less than 12-inch centers. At the option of the Contractor, aluminum jacket with factory-fabricated Pittsburg or "Z" type longitudinal joint may be provided. Jacket shall be secured with bands provided by the jacket manufacturer designed to cover the circumferential joint and secure the jacket.

9.4.3 Flanges, couplings, valves, anchors, and fittings shall be insulated with factory premolded, prefabricated or field fabricated sections of insulation of insulation of the same material and thickness as the adjoining pipe insulation. When segments of insulation are used, elbows shall be provided with not less than three segments. When nesting size sections of insulation are used, all voids shall be filled with insulating cement or mineral fiber. Sections of insulation shall be secured in place with wire or by joining the sections with Class 2 adhesive. Class 1 adhesive

shall be applied over the insulation in two coats with glass cloth or tape embedded between coats. Cloth or tape shall overlap itself one inch and adjoining insulation jacket 2 inches. In lieu of above finish, factory-premolded one-piece polyvinyl chloride fitting covers may be used. Polyvinyl chloride fitting covers shall be secured by stapling or taping. When polyvinyl chloride fitting covers are used, factory precut blanket inserts provided by the fitting cover manufacturer may be used. Inserts shall be installed in accordance with the fitting manufacturer's recommendations. When required, insulated flanges, couplings, valves, anchors, and fittings shall be covered with preformed or field-fabricated sections of aluminum jacket secured with bands in lieu of finishes specified above. When pipe insulation with factory-applied aluminum jacket is provided, flanges, valves and fittings may be insulated with factory- or field-fabricated sections of the same material and thickness as adjoining pipe insulation and jacket. Sections shall be secured with bands. Unless otherwise shown, unions will not be insulated and pipe insulation and jacket shall terminate neatly at the ends of unions. All termination points shall be finished with a brush coat of Class 1 adhesive.

10. BELOWGROUND PIPE INSULATION.

10.1 General. All belowground heating hot water to 200°F pipe shall be insulated with 1-1/2 inch thick insulation.

10.2 Application. Prior to application, the bore surfaces of the insulation shall be coated with a thin application of a high strength gypsum cement of a type recommended by the insulation manufacturer. Insulation shall be applied with butt joints staggered, one half section overlapping the next opposite half section. All joints shall be tightly butted and sealed with bedding compound. Insulation shall be secured in place with 3/4-inch wide stainless steel bands using two bands per section of insulation. Insulation shall terminate at anchor blocks. Insulation shall be continuous through sleeves and manholes. Excavation, trenching and backfilling shall conform to section: EXCAVATION, TRENCHING, AND BACKFILLING FOR UTILITY SYSTEMS, except materials for the lower portion of the trench to a height of 3 inches over the insulation shall be free of stones larger than 1/4 inch in any dimension. When entering buildings, insulation specified in this paragraph shall terminate 2 inches beyond the interior side of the wall or floor and shall butt tightly against the insulation specified in paragraph ABOVEGROUND PIPE INSULATION. Butt joint shall be sealed with vapor barrier coating. Provisions for expansion shall be made in accordance with the insulation manufacturer's recommendations.

10.3 Flanges, Couplings, Unions, Valves and Fittings. Flanges, couplings, valves and fittings shall be insulated with factory-premolded, prefabricated, or field-fabricated sections of insulation of the same material and thickness as the adjoining pipe insulation. Unions shall not be insulated. Insulation sections shall be secured in place with wire. Bore surfaces shall be coated and joints sealed as specified above for pipe insulation.

10.4 Finish. All insulation shall be finished with two coats of asphaltic mastic with glass cloth or tape embedded between coats. Glass cloth or tape shall overlap itself 2 inches at all joints. Wet film thickness of both coats of asphaltic mastic shall be not less than 1/8 inch. At termination points other than the sealed butt joint between above-and-belowground insulation, asphaltic mastic and cloth or tape shall cover the end of the insulation and extend 2 inches along the base pipe.

11. PAINTING AND FINISHING. Painting shall be as specified in section: PAINTING, GENERAL.

12. STEEL SOLAR HOT WATER STORAGE TANK (UNDERGROUND).

12.1 Prior to insulating the tank, the tanks exterior surface shall be resin coated.

12.2 Tank mounting shall be isolated from foundation with 1/4 inch thick resin block.

12.3 Upon completion of the tank insulation, the insulation shall be vapor sealed.

* * * * *

SECTION 15G

VENTILATING SYSTEM, MECHANICAL

Index

1. Applicable Publications
2. General
3. Materials and Equipment
4. Approval of Materials and Equipment
5. Workmanship
6. Electrical Work
7. Air Moving Devices
8. Ductwork
9. Rainhoods
10. Acoustical Duct Lining
11. Painting and Finishing
12. Tests

1. APPLICABLE PUBLICATIONS. The following publications of the issues listed below, but referred to thereafter by basic designation only, form a part of this specification to the extent indicated by the references thereto.

1.1 Federal Specifications.

141A/6061	Salt Spray (Fog) Test
F-F-300a	Filter, Air Conditioning: Viscous-Impingement and Dry Types, Cleanable
F-F-310a & Int. Am-1 (GSA-FSS)	Filter, Air Conditioning: Viscous-Impingement and Dry Types, Replaceable
L-S-125B	Screening, Insect, Nonmetallic
HH-I-545B & Am-1	Insulation, Thermal and Acousticl (Mineral Fiber, Duct Lining Material)
QQ-S-698	Steel, Sheet and Strip, Low Carbon
QQ-S-775	Steel, Sheets, Carbon, Zinc Coated
QQ-S-766	Steel Plates, Sheets, and Strip-Corrosion Resisting

1.2 American Society for Testing and Materials (ASTM) Publications.

A 167-74	Stainless and Heat-Resisting Chromium-Nickel Steel Plate, Sheet, and Strip
A 525-75	Steel Sheet, Zinc-Coated (Galvanized) by the Hot-Dip Process, General Requirements
B 221-75	Aluminum-Alloy Extruded Bars, Rods, Wire, Shapes, and Tubes
D 1571-73	Woven Asbestos Cloth
E 84-75	Surface Burning Characteristics of Building Materials

1.3 National Fire Protection Association (NFPA) Codes.

No. 90A-1975	Air Conditioning and Ventilating Systems
No. 91-1973	Blower and Exhaust Systems

1.4 Sheet Metal and Air Conditioning Contractors National Association, Inc. (SMACNA) Publications.

Air Moving and Conditioning Association, Inc. (Standard 210)

Fire Danger Guide for Air Handling System (1970, 3d Prtg, Sep 1973)

Acoustical and Board Products Association (Mounting No. 6)

Low Velocity and Duct Construction Standards (1969)

1.5 Underwriters' Laboratories, Inc. (UL) Publications.

Building Materials Directory (January 1976 with Quarterly Supplements)

Fire Resistance Index (January 1975 with Quarterly Supplements)

UL 10B	Fire Tests of Door Assemblies (Feb 28, 1974; Rev Mar 1, 1974)
UL 555	Fire Dampers (Jul 31, 1973)

1.6 Military Specifications (Mil. Spec.).

MIL-A-3316B & Am-2	Adhesives, Fire-Resistant, Thermal Insulation

2. GENERAL. The contract drawings indicate the extent and general arrangement of the ventilating system. The Contractor shall be responsible for installing the proposed system as indicated, without violation of applicable codes, standards, or specification requirements. Except where dimensions are shown to locate ductwork or equipment, the drawings show duct size and arrangement only. Equipment and ductwork arrangements submitted shall fit into the space as indicated, and shall allow adequate and approved clearances for entry, servicing and maintenance.

2.1 Capacities of equipment and materials shall be not less than those indicated.

2.2 Conformance to Agency Requirements. Where materials or equipment are specified to conform to the requirement of the Underwriters' Laboratories, Inc., or the Air Moving and Conditioning Association, Inc., the Contractor shall submit proof of such conformance. The label or listing of the specified agency will be acceptable evidence. In lieu of such label or listing, the Contractor may submit a written certificate from any nationally recognized testing agency adequately equipped and competent to perform such services, stating that the items have been tested and that the units conform to the requirements specified hereinbefore, including methods of testing of the specified agencies. The system installation shall conform to the requirements of the National Fire Protection Association, Standard No. 90A, and 91.

2.3 Nameplates. Each major item of equipment shall have the manufacturer's name, address, serial and model number on a plate securely attached to the item.

2.4 Safety Requirements. Belts, pulleys, chains, gears, couplings, projecting setscrews, keys, and other rotating parts so located that personnel can come in close proximity thereto, shall be fully enclosed or properly guarded. Items such as catwalks, ladders and guardrails shall be provided where indicated for safe operation and maintenance of equipment.

2.5 Verification of Dimensions. The Contractor shall visit the premises to thoroughly familiarize himself with all details of the work and working conditions and verify all dimensions in the field, and shall advise the Contracting Officer of any discrepancy before performing any work. The Contractor shall be specifically responsible for the coordination and proper relation of his work to the building structure and to the work of all trades.

2.6 Spare-Parts Data. After approval of materials and equipment and 2 months prior to the date of beneficial occupancy, the Contractor shall furnish in triplicate a complete list of parts and supplies, with current unit prices and source of supply.

3. MATERIALS AND EQUIPMENT shall conform to the respective publications and other requirements specified below. Other materials and equipment shall be as specified elsewhere herein and as shown on the drawings and shall be the products of manufacturers regularly engaged in the manufacture of such products. Items of equipment shall essentially duplicate equipment that has been in satisfactory use at least 2 years prior to bid opening and shall be supported by a service organization that is, in the opinion of the Contracting Officer, reasonably convenient to the site.

3.1 Acoustical Duct Lining. Federal Specification HH-I-545, type I and type II, except as herein specified.

3.1.1 Fire Hazard Classification. Flame spread rating of acoustical materials shall not exceed 25, and smoke developed rating shall not exceed 50 when tested in accordance with ASTM Specification E 84. The adhesive shall be fire resistant in accordance with Military Specification MIL-A-3316.

3.2 Adhesive. Military Specification MIL-A-3316, class 1 or 2 as hereinafter specified.

3.3 Aluminum Extrusions. ASTM Specification B 221, alloy 6063, temper.

3.4 Screens.

3.4.1 Insect Screen Cloth. Federal Specification L-S-125, type II, class 1, aluminum color. Mesh size shall be 18 by 16.

3.4.2 Frames for Screens. Frames shall be provided for screens; frames shall be removable and shall be of extruded aluminum or stainless steel. Insect screen frames shall be grooved type with vinyl or neoprene spline insert for securing screen cloth.

3.5 Steel Sheets shall conform to the following requirements.

3.5.1 Uncoated. Federal Specification QQ-S-698, skin-passed temper.

3.5.2 Galvanized. Federal Specification QQ-S-775, type I, class d; ASTM Specification A 525.

3.5.3 Corrosion Resisting. Federal Specification QQ-S-766, class 304, finish Number 1; ASTM Specification A 167.

4. APPROVAL OF MATERIALS AND EQUIPMENT. Within 20 days of receipt of notice to proceed, and before starting installation of any materials or equipment, the Contractor shall submit in triplicate to the Contracting Officer for approval, layout drawings and list of materials and equipment to be incorporated in the work. The layout drawings shall include a plan and elevations of the proposed ductwork and equipment to establish that the equipment will fit the allotted spaces with clearance for installation and maintenance. The layout drawings shall show proposed details for attachment, anchoring, and hanging to structural framing of the building; vibration isolation units; foundations and supports; location and size of sleeves and prepared openings for passage of ducts. If departures from the contract drawings are deemed necessary by the Contractor, details of such departures including changes in related portions of the project and the reasons therefor, shall be submitted with the drawings. Approved departures shall be made at no additional cost to the Government. A complete electrical connection diagram for each electrically controlled component having more than one automatic or manual control device, shall be submitted to the Contracting Officer for approval. Wiring diagrams shall identify each component and one diagram shall show all interconnected or interlocked components. The lists of materials and equipment shall be supported by sufficient descriptive materials such as catalogs, cuts, diagrams, and other data published by the manufacturer, to demonstrate conformance to the specification requirements; model numbers alone will not be acceptable. The data shall include the address and name of the nearest service and maintenance organization that regularly stocks repair parts. Listing of items that function as part of an integrated system shall be furnished at one time. One copy of the layout drawings and of each list will be returned, marked to indicate approval.

5. WORKMANSHIP. Materials and equipment shall be installed in accordance with the approved recommendations of the manufacturer to conform to the contract documents. The installations shall be accomplished by workmen skilled in this type of work.

6. ELECTRICAL WORK. Electrical-motor-driven equipment specified herein shall be provided complete with motors, and controls. Electrical equipment and wiring shall be in accordance with section: ELECTRICAL WORK, INTERIOR. Manual or automatic control and protective or signal devices required for the operation specified herein, and any control wiring required for control devices but not shown on the electrical plans, shall be provided under this section.

7. AIR MOVING DEVICES.

7.1 General. Fans shall be tested and rated in accordance with the standards of the Air Moving and Conditioning Association, Inc. Standard 210. Fans shall be directly connected to the motor shaft. Fans and motors shall be provided with vibration isolation supports or mountings. Each fan shall be selected to produce the capacity required at the fan total pressure indicated.

7.2 Centrifugal Fans shall be fully enclosed, single-width single-inlet, or double-width double-inlet, as required or indicated. Impeller wheels shall have backward inclined or backward curved blades of the non-overloading type, except wheels 12 inches in diameter or smaller may have forward curved blades. Impeller wheels shall be rigidly constructed, accurately balanced both statically and dynamically, and free from objectionable vibration or noise. Fan blades may be flat or airfoil design in wheel sizes up to 27 inches. Fan wheels 36 inches or less in diameter may have one or more extra-long bearings between the fan wheel and the drive. The fan shafts shall be steel, accurately finished, and shall be provided with key and key seats for impeller hubs and fan pulleys. Each fan outlet shall be designed for the attachment of angles and bolts for attaching flexible connections. The fans shall be furnished with coating hereinafter specified in paragraph PAINTING AND FINISHING. Motor, unless otherwise indicated shall not exceed 1,800 r.p.m. and shall have open enclosure. Remote manual switch with pilot indicating light shall be provided where indicated.

7.3 Ceiling Mounted Exhaust Fans shall be centrifugal type, and shall be complete with enclosure, fans, motors, grille, barometric damper, vibration isolation bases, and any other appurtenances necessary for satisfactory operation. Each exhaust fan shall have physical dimensions suitable to fit space allotted to the unit, and shall have the capacity indicated.

7.3.1 Enclosure shall be constructed of not lighter than 24 gage, 0.028 inch nominal thickness, hot-dip galvanized steel or finished as hereinafter specified under paragraph PAINTING AND FINISHING. The enclosure shall be acoustically lined at the factory with not less than 1/2 inch thickness of fiber glass manufactured for duct liner service. All acoustical duct liner materials, coating and adhesive shall conform to fire-hazard requirements in paragraph Acoutical Duct Lining under paragraph MATERIALS AND EQUIPMENT.

7.3.2 Fans shall be single-inlet centrifugal type with a scrll. Fans shall be statically and dynamically balanced at the factory. Fans shall be mounted on steel motor shaft. Fan motors shall have open enclosures. Remote manual switch with pilot indicating light shall be provided where indicated.

8. DUCTWORK shall be constructed of galvanized steel sheets or of aluminum sheets. Ducts, unless otherwise approved, shall conform to the dimensions indicated and shall be straight and smooth on the inside, with joints neatly finished. All edges and slips shall be hammered down to leave a smooth interior duct finish. Joints shall be made substantailly airtight. Ducts shall be anchored securely to the framing in the building and the method of anchoring and/or fastening shall be detailed on the layout drawings. Ducts shall be so constructed and installed as to be completely free from vibration under all conditions of operation. Layout drawings required under the paragraph APPROVAL OF MATERIALS AND EQUIPMENT shall show, for suspended ductwork, the location of all supports. Supports shall be attached only to structural framing members. Where supports are required between structural framing members, suitable intermediate metal framing shall be provided and detailed. Items not shown in detail or described herein shall be set forth in the publication, Low Velocity and Duct Construction Standards of the Sheet Metal and Air Conditioning Contractors National Association.

8.1 Rectangular Ducts shall be fabricated in conformance with SMACNA Low Velocity and Duct Construction Standards.

8.2 Round Ducts shall be fabricated in conformance with table I.

8.3 Air Deflectors shall be provided in: all square elbows, duct-mounted supply outlets, takeoff or extension collars to supply outlets, and tap-in branch-takeoff connections. Air deflectors shall be factory fabricated and factory or field assembled units consisting of curved turning vanes or louver blades for uniform air distribution and change of direction with minimum turbulence and pressure loss. Square elbows shall be provided with curved vanes.

TABLE I

SHEET METAL THICKNESS FOR ROUND DUCT CONSTRUCTION, LOW VELOCITY SYSTEMS

	Duct and Fittings (a)		Girth Reinforcing	Girth Joints (b)
Duct Diameter, Inches	Galvanized Steel U.S. Gage and Nominal Thickness	Aluminum Sheet B&S Gage and Thickness	Minimum Reinforcing Angle Size and Maximum Longitudinal Spacing	Continuously Welded or As Below
Up to 8	26 0.0217	22 0.025	None	Crimped and beaded joint

(a) Round ducts may be fabricated with lock-type or butt welded longitudinal seams or spiral seams.
(b) Flanged joints may be considered as girth reinforcing.

8.4 Duct Sleeves and Framed Prepared Openings. Duct sleeves shall be provided for all round ducts 15-inches diameter or less passing through floors, walls, ceilings, or roofs and shall be installed during construction of the floor, wall, ceiling or roof. All square and rectangular ducts passing through floors, walls, ceilings, or roofs shall be installed through framed prepared openings. The Contractor shall be responsible for the proper size and location of sleeves and framed prepared openings. Duct sleeves and framed prepared openings shall be provided for all duct mains and duct branches. Branch takeoff connections to grilles, registers and diffusers shall be in accordance with SMACNA Low Velocity and Duct Construction Standards.

8.4.1 Duct Sleeves shall be fabricated from 20 gage, 0.0396 inch nominal thickness, galvanized steel unless otherwise indicated. Where sleeves are installed in bearing walls or partitions, black steel pipe, schedule 30, 40 or standard weight shall be used. Sleeve shall provide one inch clearance between the duct and the sleeve except at grilles, registers and diffusers.

8.4.2 Framed Prepared Openings for round ducts larger than 15 inches diameter and for all square and rectangular ducts shall provide one inch clearance between the duct and the opening except at grilles, registers, and diffusers.

8.4.3 Closure Collar of galvanized steel not less than 4 inches wide shall be provided on each side of walls or floors where sleeves or prepared openings are provided except where grilles, registers or diffusers are installed. The collar shall be installed tight against the surface, and shall fit snugly around the duct. Collars for round ducts 15 inches diameter or less shall be fabricated from 20 gage, 0.0396 inch nominal thickness, galvanized steel. Collars for round, square or rectangular ducts with minimum dimension over 15 inches shall be fabricated from 18 gage, 0.0516 inch nominal thickness, galvanized steel.

8.4.4 Space between the sleeve or framed prepared opening and the duct shall be packed with mineral wool or other approved material shown on the drawings.

9. RAINHOODS in the ventilating system shall be either in building wall or directly connected by ductwork to air handling equipment. Rainhoods shall be fabricated from aluminum or galvanized steel sheets, and shall be provided with frames of aluminum or galvanized steel structural shapes. Inset screens shall be provided on each rainhood. Sheet metal thickness and fabrications shall conform to SMACNA Low Velocity and Duct Construction Standards.

10. ACOUSTICAL DUCT LINING shall be fibrous glass designed exclusively for lining of ducts. The air-side surface of the liner shall be capable of withstanding air velocity of 4,000 feet per minute without delamination or erosion for service in low-velocity duct systems. Sound absoprtion coefficient shall not be less than indicated in table II herein as determined by procedures in Bulletin 1975 of the Acoustical and Board Products Association, mounting No. 6. The material shall be 1/2 inch thick and the density of the lining including any surface coating or facing shall not be less than 1.35 pounds per cubic foot nor greater than 3.3 pounds per cubic foot. The liner composition may be uniform density, graduated density, or dual density, and coated or uncoated, as standard with the manufacturer. The acoustical liner shall conform to the fire-hazard classification requirement specified in paragraph Acoustical Duct Lining under paragraph MATERIALS AND EQUIPMENT.

TABLE II

SOUND ABSORPTION COEFFICIENT

OCTAVE PASS BANDS	2	3	4	5	6	7
Mid-frequency, Cycles Per Second	125	250	500	1000	2000	4000
Sound Absorption Coefficient	.25	.48	.67	.88	.89	.79

10.1 Application. The lining shall be applied in cut-to-size pieces attached to the interior of the exhaust fan housing with fire-resistant adhesive, class 2.

11. PAINTING AND FINISHING.

11.1 Factory Coating. Equipment and component items, when fabricated from ferrous metal, shall be factory finished with the manufacturer's standard finish except that items located outside of buildings shall have weather resistant finishes that will withstand 500 hours exposure to the salt spray test specified in method 6061 of Federal Standard No. 141 using a 20-percent sodium chloride solution. Immediately after completion of the test, the specimen shall show no sign of blistering, wrinkling, cracking or loss of adhesion and no sign of rust creepage beyond 1/8 inch on either side of the scratch mark.

11.2 Field Painting. Painting required for surfaces not otherwise specified and finish painting of items only primed at the factory are specified in section: PAINTING, GENERAL.

12. TESTS. Each exhaust air system shall be balanced to produce the indicated air quantities at the conditions shown. Control devices shall be set to control at the points indicated or directed. Bearings shall be lubricated, and the speed and direction or rotation of each fan shall be checked. The running current of each motor shall be checked.

12.1 Report of Test Data indicating the following in typed tabulation form shall be submitted to the Contracting Officer not less than 2 days before the final test of the system.

12.1.1 Fans.

a. Specified air quantity and static pressure.

b. Installed motor horsepower.

12.2 Final Tests. Upon completion, and prior to acceptance of the installation, the Contractor shall subject the ventilating system to such operating tests as may be required by the Contracting Officer to demonstrate satisfactory functional and operating efficiency. Operating tests shall cover a period of not less than 6 hours for each system, and all tests shall be conducted at such times as the Contracting Officer may direct. If tests do not demonstrate satisfactory operation of the ventilating system, deficiencies shall be corrected and tested. All instruments, facilities, and labor required to properly conduct the tests shall be provided by the Contractor at no additional cost to the Government. The electricity required for testing will be furnished by the Government.

* * * * *

SECTION 15H

AIR-CONDITIONING SYSTEM (UNITARY TYPE)

Index

1. Applicable Publications
2. General
3. Materials and Equipment
4. Approval of Materials and Equipment
5. Workmanship
6. Electrical Work
7. Unitary Heat Pump
8. Filters
9. Deleted
10. Heating Coil
11. Sheet Metal Ductwork
12. Glass Fiber Ductwork
13. Diffusers, Registers, Grilles
14. Temperature Controls
15. Acoustical Duct Lining
16. Insulation
17. Equipment Installation
18. Access Panels
19. Cleaning, Testing, and Balancing
20. Test Data
21. Painting and Finishing
22. Operating and Maintenance Instructions

1. APPLICABLE PUBLICATIONS. The following publications, of the issues listed below, but referred to thereafter by basic designation only, form a part of this specification to the extent indicated by the references thereto.

1.1 Federal Specifications.

F-F-310a & Int. Am-1 (GSA-FSS)	Filter, Air Conditioning: Viscous-Impingement and Dry Types, Replaceable
BB-F-1421	Fluorocarbon Refrigerants
HH-I-545B & Am-1	Insulation, Thermal and Acoustical (Mineral Fiber, Duct Lining Material)
QQ-B-654	Brazing Alloys, Silver
QQ-S-571E & Am-2	Solder; Tin Alloy; Lead-Tin Alloy; and Lead Alloy
QQ-S-775E	Steel Sheets, Carbon, Zinc-Coated (Galvanized) by the Hot-Dip Process
RR-W-360A	Wire Fabric, Industrial
SS-B-755a & Am-1	Building Board, Asbestos-Cement: Flat and Corrugated
WW-T-775B	Tube, Copper; Seamless (for Air Conditioning and Refrigeration)

1.2 Federal Standard.

No. 141a & Change Notices 1, 2, 3, 4	Paint, Varnish, Lacquer, and Related Materials; Methods of Inspection, Sampling, and Testing

1.3 Military Specifications.

MIL-A-3316B & Am-2	Adhesives, Fire-Resistant, Thermal Insulation
MIL-A-7021C	Asbestos Sheet, Compressed, for Fuel, Lubricant, Coolant, Water, and High Temperature Resistant Gaskets
MIL-H-22547B	Heat Pumps, Heating and Cooling (Unitary)

1.4 Acoustical and Board Products Association (ABPA) Publication.

Bulletin 1975	Performance Data Acoustical Materials

1.5 Air-Conditioning and Refrigeration Institute (ARI) Standards.

240-75	Unitary Heat Pump Equipment
410-72	Forced-Circulation Air-Cooling and Air-Heating Coils

1.6 Air Diffusion Council (ADC) Test Code.

1062R3	Equipment Test Code (1972)

1.7 American National Standards Institute, Inc. (ANSI) Standards.

B31.5-1974	Refrigeration Piping

1.8 American Society for Testing and Materials (ASTM) Standards.

D 1571-73	Woven Asbestos Cloth

1.9 American Society of Mechanical Engineers (ASME) Code.

Boiler and Pressure Vessel Code, & Interpretations:

Section VIII	Pressure Vessels, Division 1 (1974; Addenda: Summer & Winter 1974; Summer & Winter 1975)

1.10 Institute of Electrical and Electronic Engineers Inc. (IEEE).

No. 112A	Test Procedure for Polyphase Induction Motors and Generators

1.11 National Fire Protection Association (NFPA) Standards.

No. 90A-1975	Air Conditioning and Ventilating Systems
No. 70-1975	National Electric Code

1.12 Sheet Metal and Air Conditioning Contractors National Association, Inc. (SMACNA) Publication.

Low Velocity and Duct Construction Standards (1969)

1.13 Underwriters' Laboratories, Inc., (UL) Standards.

Building Materials Directory (January 1976 with Quarterly Supplements)

Electrical Appliance and Utilization Equipment List (June 1975 with Quarterly Supplements)

UL 181	Factory-Made Air Duct Materials and Air Duct Connectors (Apr 30, 1974)
UL 573	Electric Space Heating Equipment

1.13 Underwriters' Laboratories, Inc., (UL) Standards. (Continued)

UL 559	Heat Pumps
UL 984	Sealed Motor-Compressors

2. GENERAL. The contract drawings indicate the extent and general arrangement of the air-conditioning system. Equipment, ductwork, and piping arrangements shall fit into space allotted and shall allow adequate acceptable clearances for installation, replacement, entry, servicing, and maintenance. Refrigeration equipment and the installation thereof shall conform to ANSI Standard B9.1.

2.1 Capacities of all equipment and material shall be not less than those indicated.

2.2 Conformance With Agency Requirements. Where materials or equipment are specified to conform to requirements of the Underwriters' Laboratories, Inc., Air-Conditioning and Refrigeration Institute, or American Society of Heating, Refrigerating and Air-Conditioning Engineers, the Contractor shall submit proof of such conformance. The label or listing of the specified agency will be acceptable evidence. In lieu of the label or listing, the Contractor may submit a written certificate from any approved, nationally recognized testing organization adequately equipped and competent to perform such services, stating that the items have been tested and that the units conform to the requirements, including methods of testing, of the specified agency. Where equipment is specified to conform to requirements of the ASME Boiler and Pressure Vessel Code, the design, fabrication, and installation shall conform to the code in every respect. Installation of the system shall conform to the requirements of the National Fire Protection Association, Standard No. 90A.

2.3 Nameplates. Each major item of equipment shall have the manufacturer's name, address, serial and model numbers on a plate securely attached to the item.

2.4 Safety Requirements. Belts, pulleys, chains, gears, couplings, projecting setscrews, keys, and other rotating parts located so that any person can come in close proximity thereto shall be fully enclosed or properly guarded. High-temperature equipment and piping so located as to endanger personnel or create a fire hazard shall be properly guarded or covered with insulation of a type specified in section: THERMAL INSULATION FOR MECHANICAL SYSTEMS. Items such as catwalks, ladders, and guardrails shall be provided where required for safe operation and maintenance of equipment.

2.5 Spare-Parts Data. After approval of materials and equipment and 2 months prior to the date of beneficial occupancy, the Contractor shall furnish a complete list of parts and supplies, with current unit prices and source of supply.

2.6 Verification of Dimensions. The Contractor shall be responsible for the coordination and proper relation of his work to the building structure and to the work of all trades. The Contractor shall visit the premises and thoroughly familiarize himself with all details of the work and working conditions, to verify all dimensions in the field, and to advise the Contracting Officer of any discrepancy before performing any work.

3. MATERIALS AND EQUIPMENT shall conform to the respective publications and other requirements specified below. Other materials and equipment shall be as specified elsewhere herein and as shown on the drawings and shall be the products of manufacturers regularly engaged in the manufacture of such products. Items of equipment shall essentially duplicate equipment that has been in satisfactory use at least 2 years prior to bid opening and shall be supported by a service organization that is, in the opinion of the Contracting Officer, reasonably convenient to the site.

3.1 Air-Conditioning Compressors having less than the 2 years' service record specified above, will be acceptable when a certified record of satisfactory field operation under normal operating conditions for not less than 6,000 hours can be shown. Types that have been shown to have operated satisfactorily for these periods may have modifications, provided it can be clearly shown that the modifications will not increase maintenance and operating costs and will not decrease the life of the machine. Modifications of the following descriptions will definitely require compliance with the full 2-year or 6,000-hour satisfactory experience requirement.

(1) Increase in rotative speeds in excess of 20 percent.

(2) Reduction in metal thickness in sections subject to high pressures or vacuum.

(3) Change of refrigerant.

(4) Change in lubricating system and bearings.

3.2 Asbestos Connections. ASTM Standard D 1571, Underwriters grade.

3.3 Flanges. Federal Specification WW-F-406, class 125.

3.4 Gaskets. Military Specification MIL-A-7021, class 2, 1/16 inch thick.

3.5 Duct Liner. Federal Specification HH-I-545, type I and type II, except as hereinafter specified.

3.6 Refrigerant. Federal Specification BB-F-1421.

3.7 Sheets, Metal. Gage numbers specified hereinafter refer to United States Standard Gage. Federal Specification QQ-S-775, type I, class d.

3.8 Solder.

3.8.1 For Refrigerant Lines. Federal Specification QQ-B-654, grade III.

4. APPROVAL OF MATERIALS AND EQUIPMENT. Within 30 days of receipt of notice to proceed, and before starting installation of any materials or equipment, the Contractor shall submit to the Contracting Officer for approval, in triplicate, layout drawings of the equipment room or rooms and lists of materials and equipment to be incorporated in the work. The layout drawings shall include a plan and elevations of the proposed piping, ductwork and equipment, to establish that the equipment will fit the allotted spaces with clearances for installation and maintenance. The drawings shall show proposed details for attachment, anchoring, and hanging to structural framing of the building; vibration isolation units; foundation and support; location and size of sleeve and prepared openings for passage of pipes and ducts. If departures from the contract drawings are deemed necessary by the Contractor, details of such departures, including changes in related portions of the project and the reasons therefor, shall be submitted with the drawings. Approved departures shall be made at no additional cost to the Government. A complete electrical connection diagram for each electrically controlled component having more than one automatic or manual control device, shall be submitted to the Contracting Officer for approval, in addition to the automatic temperature control diagram required hereinafter. Wiring diagrams shall identify each component and one diagram shall show all interconnected or interlocked components. To demonstrate conformance to the specification requirements, the lists of materials and equipment shall be supported by sufficient descriptive material, such as catalogs, cuts, diagrams, performance curves, charts, layout drawings, and other data published by the manufacturer. Model numbers alone will not be acceptable. The data shall also include the name and address of the nearest service and maintenance organization that regularly stocks repair parts. Listings of items that function as parts of an integrated system shall be furnished at one time. Only copy of the layout drawings, wiring diagrams and lists will be returned, marked to indicate approval.

5. WORKMANSHIP. All materials and equipment shall be installed in accordance with the approved recommendations of the manufacturer to conform with the contract documents. The installation shall be accomplished by workmen skilled in this type of work.

6. ELECTRICAL WORK. Electrical-motor-driven equipment specified herein shall be provided complete with motors, motor starters, and controls. Electrical equipment and wiring shall be in accordance with section: ELECTRICAL WORK, INTERIOR. Electrical characteristics shall be as indicated. Motor starters shall be provided complete with properly sized thermal-overload protection and other appurtenances necessary for the motor control indicated. Each motor shall be of sufficient power to drive the equipment at the specified capacity without exceeding the nameplate rating of the motor. Manual or automatic control and protective or signal devices required for the operation herein specified and any control wiring required for controls and devices but not shown on the electrical plans, shall be provided under this section of the specifications.

7. UNITARY HEAT PUMP.

7.1 General. The heat pump shall be a complete self-contained electrically operated unit, employing factory assembled refrigeration circuit or circuits. The unit shall utilize the heat content available from air for the heating cycle, and shall utilize outside air for cooling the condenser assembly for the cooling cycle. The unit shall include means for air circulating, cooling, and air temperature controls. Air cleaning means shall be provided and shall be an integral part of the unit. The heat pump shall consist of a factory assembled sheet metal enclosure complete with compressor-motor assemply, compressor motor starter, compressor motor overload protective devices, and crankcase heaters. The unit shall employ outdoor coil and outdoor coil fan motor assembly, an indoor coil and fan motor assembly, an indoor coil fan motor controller or switch and fan overload protective devices, refrigerant and fan overload protective device, control devices, changeover valves, refrigerant and oil change, a pressure relief means. Supplemental electric heaters shall be supplied when required. Temperature limiting devices shall be furnished on heat pumps with supplemental electric heaters and pressure limiting devices when required. All necessary tubing, piping, and control circuits and accessories required for a complete operating unit shall be furnished. The unit shall be factory charged with refrigerant and oil and ready for operation after being set in place and connected to duct system, drain, and electrical current. Units shall conform to the requirements of ARI Standard 240 Underwriters' Laboratories Standard UL 559, and Military Specification MIL-H-22547B. Refrigerant shall be one of the fluorocarbon types.

7.2 Hermatic Motor-Compressor. Hermetic motor-compressor units shall conform to the standards of UL984 and UL559 with regards to construction, performance, and testing. The requirements for motor-compressor protection systems of these standards shall also apply in addition to the following.

7.2.1 Thermal Protection. An internal motor-winding temperature-sensing protection device of the automatic reset type for the compressor motor shall be provided to prevent motor operation under excessive motor winding temperatures. For size one heat pump, the manufacturer's recommended maximum motor winding temperature shall not be exceeded when the heat pump is operating under any of the tests prescribed in ARI 240, and in no case shall winding temperature under any of these test conditions exceed 135 degrees centigrade (C), (275 degrees Fahrenheit (F)), when measured by the resistance method set forth in IEEE No 112A, as applicable. For size one heat pumps, as part of the first artical tests, a certificate of compliance shall be furnished stating the manufacturer's recommended maximum motor winding temperature.

7.2.2 Current Overload Protection. Motor running current overload protection of the manual or automatic reset type conforming to UL984 shall be provided and installed in accordance with NFPA No 70.

7.2.3 Crankcase Heating. Means shall be provided for heating the compressor crankcase during "OFF" cycles to minimize liquid foaming, and prevent consequent liquid slugging under compressor starting conditions caused by retention of refrigerant by the oil in the compressor. Crankcase heaters either external or internal (except for motor windings used as heaters) shall be readily replaceable from the exterior without breaking the refrigerant seal.

7.2.4 Time Delay Mechanism. The motor protection system shall contain a device or means that delays operation of the compressor motor for a period of at least 3 minutes, but not more than 6 minutes after compressor operation is called for when shut down for any reason, inadvertent or otherwise has occurred.

7.2.5 Liquid Flood-Back. A means shall be provided for protecting the compressor from liquid flood-back, under all design conditions of operation, including defrost. Properly designed and sized accumulators that allow a free flow of oil back to the compressor and in conjunction with defrost mechanism will satisfy this requirement.

7.3 Coils.

7.3.1 Direct-Expansion Coils shall be fin-and-tube type constructed of seamless copper tubes and copper or aluminum fins mechanically bonded or soldered to tubes. At the factory each coil shall be tested under water at not less than 300 psi air pressure and shall be suitable for 200 psi working pressure. Each coil shall be completely dehydrated and sealed at the factory upon completion of pressure tests.

7.3.2 Heating Coil shall be designed for hot water and shall be mounted as indicated.

7.4 Fan. Fans utilized in each unit shall be of the centrifugal type or propeller type, quiet in operation and adequately secured to shafts. Shafts shall be supported by at least 2 self-alining bearings. Bearings shall be self-oiling with adequate oil reservoirs or permanent life lubricated ball or sleeve bearings. Oil or grease fittings, when used, shall be readily accessible upon removal of the service panel. Fan may be direct- or belt-driven. Where fan is belt-driven, motor shall be provided with adjustable means for V-belt drive. All fans shall be dynamically and statically balanced. Supply air fans shall be centrifugal type capable of supplying the cubic feet per minute (cfm) and static pressure specified. Air supply fan and motor shall be capable of supplying the specified cfm when operating during heating and cooling. V-belt drives shall conform to RMA and have a service factor not less than 1.2. Fan motors shall have open enclosure. Motor starters shall be magnetic across-the-line type with watertight enclosure. Thermal overload protection shall be of the manual or automatic reset type.

7.5 Electrical Heaters. When specified on the drawing heaters shall be of packaged design arranged for inserting in the heat pump unit so heating elements are directly in the air stream. The heaters shall have low air pressure drop at nominal air flow requirements or at air flow specified. Electric duct heaters shall be of the open coil or finned tubular type, and shall have heater wires which are adequately protected against corrosion, moisture, or sagging. Duct heaters shall be of rugged construction which protects the resistor wire for life from electrical or mechanical shock, vibration or breakage in shipment, installation and use. Dummy elements of expanded metal shall be provided where necessary to uniformly distribute air flow across heater face. Electric heaters shall conform to the requirements of UL573 and NFPA No. 70. Heater wattage rating shall be within 5 percent of the specified rating. Each duct heater shall have 2 high-limit controls. The primary automatic reset thermal cut-out high-limit control shall be wired to the controlling device if possible, and the secondary manual reset thermal cut-out high-limit device will be wired to de-energize the mainpower. Both high-limits will be used to protect the elements from excess temperature in case of airflow stoppage.

7.6 Filters shall be as specified hereinafter under paragraph FILTERS.

7.7 Outer Casing shall be constructed of insulated heavy-gage metal panels adequately reinforced with angles or formed metal frame and provided with easily removable access panels located as required for access to all parts of the equipment. Fan section, where indicated, shall be provided with flanges for connection to the ductwork. Units installed outdoor shall be in a weather-protected ventilated enclosure suitable for outdoor installation.

7.8 Controls. Combination heat-off-cool and auto-on-fan switch shall be remotely mounted where indicated or directed. Thermostat shall be remotely mounted where indicated or directed. All other controls including motor starts and safety controls shall be mounted inside the enclosure, and all wiring thereof shall be accomplished at the factory. Temperature controls shall be as hereinafter specified. Motor starts for compressors shall be magnetic across-the-line type. Enclosures for motor starters shall be watertight.

8. FILTERS shall be located to filter fresh air and return air inside of the air-conditioner casing unless indicated otherwise. Filters shall be class 1 or 2 in accordance with the requirements of Underwriters' Laboratories, Inc., Building Materials Directory. Filters shall be one inch thick. Filters shall be replaceable throwaway type in accordance with Federal Specification F-F-310 of size required to suit the application.

9. DELETED.

10. HEATING COILS.

10.1 Water Coils shall be fin-and-tube type constructed of seamless copper tubes and copper or aluminum fins mechanically bonded or soldered to tubes. Casing and tube support sheets shall be 16-gage, of 0.0635-inch nominal thickness, galvanized steel, formed to provide structural strength. Tubes shall be correctly circuited for proper water velocity without excessive pressure drop and they shall be drainable where required or indicated on drawings. At the factory, each coil shall be tested under water at not less than 250 psi air pressure and shall be suitable for 200 psi working pressure. Coils shall be mounted for counterflow service. Coils shall conform to the provisions of ARI Standard 410.

11. SHEET-METAL DUCTWORK.

11.1 General. Ductwork shall be constructed of galvanized steel sheets or of aluminum sheets. Ducts, unless otherwise approved, shall conform to the dimensions indicated and shall be straight and smooth on the inside, with joints neatly finished. All edges and slips shall be hammered down to leave a smooth interior duct finish. Joints shall be made substantially airtight, and no dust marks from air leaks shall show at connections, grilles, registers, or diffusers. Ducts shall be anchored securely to the framing in the building and the method of anchoring and/or fastening shall be detailed on the layout drawings. Ducts shall be so constructed and installed as to be completely free from vibration under all conditions of operation. Layout drawings required under the paragraph APPROVAL OF MATERIALS AND EQUIPMENT shall show, for suspended ductwork, the location of all supports and typical details for anchorages. Supports shall be attached only to structural framing members. Where supports are required between structural framing members, suitable intermediate metal framing shall be provided and detailed. Square elbows shall be provided with double wall turning vanes. Items not shown in detail or covered by detailed specifications shall be as set forth in the SMACNA publication, Low Velocity and Duct Construction Standards.

11.2 Rectangular Ducts shall be fabricated in conformance with SMACNA Low Velocity and Duct Construction Standards.

11.3 Splitters and Dampers. Dampers shall have accessible operating mechanism, and where operators occur in finished portions of the building, operators shall be chormium plated with all exposed edges rounded. Splitter dampers shall be operated by quandrant operators or 3/16-inch road brought through the side of the duct with locking setscrew and bushing. Two rods are required on splitters over 12 inches. Manual volume-control dampers shall be operated by locking-type quandrant operators. Dampers and splitters shall be two gages heavier than duct in which installed. Multileaf dampers shall be opposed-blade type with maximum blade width of 12 inches. Access doors or panels shall be provided for all concealed damper operators and locking setscrews. The locking-type quadrant operators for dampers, when installed on ducts to be thermally insulated, shall be provided with stand-off mounting brackets, bases or adapters to provide clearance, between the duct surface and the operator, not less than the thickness of the insulation. Stand-off-mounting items shall be integral with the operator or standard accessary of the damper manufacturer. Volume dampers shall be provided where indicated in the drawings.

11.4 Air Extractors shall be provided in all duct-mounted supply outlets, take off or extension collars to supply outlets, and tap-in branch-take-off connections. Air extractors shall be factory fabricated and factory or field assembled units consisting of adjustable curved turning vanes or louver blades for uniform air distribution and change of direction with minimum turbulence and pressure loss. Inaccessible extractors shall be provided with means for adjustment and position lock external to the duct.

11.5 Hinged Duct-Access Doors shall be provided at all air control dampers, fire dampers, and all other apparatus requiring service and inspection in the duct systems. Access door shall be 15 by 18 inches in size unless otherwise indicated. Where size of duct will not accommodate this size, the door shall be made as large as practicable. Access doors of rigid type, not less than 24 by 24 inches in size, shall be provided on each side of each air-handling unit, and shall be made airtight with felt or rubber gaskets. Doors shall be provided with galvanized steel hinges having bronze pins and two approved brass fasteners. All doors 24 by 24 inches and over shall be provided with fasteners that can be operated from both sides. Access doors in plenums and ducts with acoustical lining shall be provided with the same type lining.

11.6 Duct Test Holes. Holes with patches in ducts and plenums shall be provided where indicated, directed, or where necessary for using pitot tubes for taking air measurements to balance the air systems.

11.7 Apparatus Connections. Where sheet metal connections are made to fans, or where ducts of dissimilar metals are connected, a noncombustible flexible connection of 15-ounce woven asbestos or other approved noncombustible materials approximately 6 inches in width conforming to ASTM Standard D 1571 shall be installed. For rectangular ducts the flexible connections locked to metal collars shall be installed using normal duct construction methods.

11.8 Prepared Openings. All square and rectangular ducts passing through floors, ceilings, or roofs shall be installed through prepared openings. The Contractor shall be responsible for the proper size and location of sleeves and openings. Prepared openings shall be provided for all duct mains and duct branches. Branch take-off connections to grilles, registers, and diffusers shall be in accordance with SMACNA Low Velocity and Duct Construction Standards.

11.8.1 Prepared Openings for all square and rectangular ducts shall provide 1-inch clearance between the duct and the opening except at grilles, registers, and diffusers.

11.8.2 Closure Collar of galvanized steel not less than 4 inches wide shall be provided on each side of walls or floors where prepared openings are provided except where grilles, registers or diffusers are installed. The collar shall be installed tight against the surface, and shall fit snugly around the duct. Collars for square or rectangular ducts with minimum dimension over 15 inches shall be fabricated from 18-gage, 0.0516 inch in nominal thickness, galvanized steel.

11.8.3 Space Between the Opening and the Duct shall be packed with commercial grade asbestos yarn.

12. GLASS FIBER DUCTWORK. In lieu of sheet metal ducts specified hereinbefore, the Contractor may provide glass fiber ducts except that glass fiber ducts will not be allowed in fan and equipment rooms and where ducts are exposed to the weather.

12.1 General. Ductwork shall be field or factory fabricated, glass fiber duct and shall comply with the requirements of the Underwriters' Laboratories UL 181 Standard for class 1 and NFPA Standard No. 90A. The duct cross-sections shall be round, square, or rectangular with wall thickness varying from 1 inch to 1-1/2 inches. Square or rectangular ducts shall be shop formed or field formed from flat duct board, complying with UL 181, when constructed in accordance with the manufacturer's latest printed instructions. The duct shall be provided with flame retardant, puncture resistant factory applied external vapor-barrier having water-vapor transmission coefficient of not more than 0.03 perms. The glass fiber duct thermal conductivity, K-value, shall be not more than 0.27 B.t.u./in./sq. ft./hr./degree F. at 75 degrees F. mean temperature. The duct shall not absorb or retain odors nor attract or support mold or vermin. The glass fiber duct system shall not erode, delaminate or impart loose fibers or odors to the air stream in any manner when the system is operated at design conditions. The use of round ducts designed for low-velocity service and square and rectangular ducts, or other configurations standard with the manufacturer, shall be limited to systems with static pressures up to 2-inch water gage in the duct, air velocities up to 2,000 fpm, and air temperatures up to 250 degrees F. Joints for round ducts shall be made with sheet metal sleeve connectors, except those ducts designed for shiplap joint construction. Sheet metal sleeve connectors, transition pieces, elbows, branch connectors and other necessary sheet metal components required for the installation of the duct system shall be standard sheet metal fittings. Round elbows in main ducts shall be of the standard 5-piece type, and in branch ducts the elbows may be of the standard 3-piece type. Square and rectangular elbows shall be provided with metal turning vanes. All joints shall be made airtight and shall be vapor sealed with fire-resistant vapor-barrier pressure sensitive tape recommended by the duct manufacturer. For rectangular ducts the maximum allowable duct span without reinforcement shall not exceed the duct manufacturer's requirements. When the duct requires reinforcing, T-shaped galvanized sheet metal stiffeners shall be provided at each joint. The stiffeners shall not be less than 24-gage, 0.0276-inch nominal thickness, galvanized steel with a 2-1/2-inch flange and 1/2-inch standing rib.

12.2 Duct Supports shall be not less than one continuous 1-inch by 1/16-inch thick galvanized steel strap hangers shaped to fit duct, spaced not over 6 feet oncenters for round ducts and not over 8 feet on centers for square or rectangular ducts up to 24-inch span and not over 4 feet on centers for ducts over 24-inch span. For hanging rectangular ducts 90-degree metal corner pads 1 inch by 1 inch by 4 inches shall be used on the duct corners to prevent puncture of the duct jacket by the steel straps unless otherwise required by the duct manufacturer. For 24-inch and larger retangular ducts, suspension shall consist of horizontal tees or angles supported by vertical straps 1 inch wide and 1/16 inch thick.

12.3 Installation. All ducts shall be installed in workmanlike manner, taking special care that all fabrications, fittings, joints, takeoffs, attachment to sheet metal work, turning vanes, dampers, stapling, sealing and taping, and insulation of exposed sheet metal work are executed in strict conformance with the manufacturer's latest recommendations.

13. DIFFUSERS, REGISTERS, AND GRILLES.

13.1 General. Diffusers, registers, and grilles shall be factory-fabricated steel or aluminum and shall distribute the quantity of air specified evenly over space intended without causing noticeable drafts over 50 fpm in occupied zone, or dead spots anywhere in the conditioned area. The Contractor shall be responsible for diffusion, spread, drop, and throw. If, according to the certified data of the manufacturer of the proposed units, the sizes indicated will not perform satisfactorily, the units shall be reselected to perform quietly and effectively in accordance with the manufacturer's recommendations as approved by the Contracting Officer. A schedule of all air inlets and outlets indicating location, types, specified air quantity, neck or face velocity, sound power level values, pressure drop, throw and drop for registers, and maximum and minimum diffusion range shall be submitted to the Contracting Officer. The inlets and outlets shall be sound rated and certified in accordance with Equipment Test Code Standard 1062R3 of Air Diffusion Council in sound power level, decibels reference 10^{-12} watt, in octave bands 2 through 8.

Diffusers and registers shall be provided with volume control and accessible operator. After the system is in operation, if excessive noise, drafts, or dead spots, are noticeable in the conditioned spaces due to improper selection of type and size of diffuser, grille, or register, the unit shall be changed to the proper size and type without additional cost to the Government.

13.2 Diffusers shall be square, rectangular, or perforated-face type with fixed or adjustable air discharge pattern as indicated. Diffusers shall be furnished with antismudge device, unless the diffuser unit minimizes ceiling smudging through design features. Sponge rubber gasket shall be provided between ceiling and diffuser or anti-smudge ring. Duct collar connecting the duct to diffuser shall be airtight and shall not interfere with volume controller. Return or exhaust units, when indicated, shall be similar to supply diffusers.

13.3 Registers shall be four-way directional-control type except that return and exhaust registers may be fixed horizontal or vertical louver type similar in appearance to supply-register face. Each register shall be provided with a face-operated opposed-blade volume-control damper. Registers shall be provided with sponge rubber gasket between flange and wall or ceiling. Wall-supply registers shall be installed at least 6 inches below the ceiling, unless otherwise indicated. Return and exhaust registers shall be located 6 inches above the floor unless otherwise indicated. Four-way directional control may be achieved by a grille face which can be rotated in four positions or by adjustment of horizontal and vertical vanes.

13.4 Grilles shall be as specified herein for registers, without volume-control damper.

14. TEMPERATURE CONTROLS shall be electric, or electronic, or a combination thereof that will provide the required sequence of operation control. A schematic diagram of the automatic temperature control system shall be submitted by the controls manufacturer, showing relays, control valves, control dampers, switches, wiring, or other items not specified herein or shown on the control diagrams indicated on the drawings but necessary to perform the functions specified under Sequence of Control on the drawings. The diagram shall be submitted within 20 days of receipt of notice to proceed and before starting installation.

14.1 Thermostats provided shall be two-position type, and shall control within plus or minus one degree F. of the temperature setting at the thermostat location, unless otherwise specified.

14.1.1 Space Thermostat shall have locking cover, and shall respond to a change of not over 2 degrees F. Space thermostats shall be mounted 60 inches above the floor unless otherwise indicated. Thermostats shall be provided with proper heating and cooling anticipation to maintain desired space conditions.

14.1.2 Fan-Safety Cutoff with manual reset shall be provided in the return air duct connection and shall be set to stop the fan if the inlet-air temperature exceeds 125 degrees F.

14.2 Transformers and Wiring. Transformers shall be provided for electric or electronic controls when required. For temperature control system, each transformer shall be connected to an electric circuit which serves no other equipment. Spare circuits in electric panels shall not be used for controls. Control wiring shall not be connected to lighting circuits. Power circuits are excluded except when controls serve an individual air-handling unit, in which case, transformers may be connected to fan-motor leads of the unit controlled.

14.3 Installation. The automatic equipment shall be installed by or under the direct supervision of the manufacturer's representative, in strict accordance with manufacturer's instructions, and approved by the Contracting Officer. All control wiring or tubing shall be provided under this section of the specifications. Before the air-conditioning installation is accepted, the Contractor shall deliver to the Contracting Officer a statement from the manufacturer or his authorized agent, certifying that the automatic-control equipment has been inspected and found to be properly installed and is functioning satisfactorily.

15. ACOUSTICAL DUCT LINING.

15.1 General. Acoustical duct lining shall be fibrous glass designed exclusively for lining duct. For service in low-velocity duct systems, the air-side surface of the liner shall be capable of withstanding air velocity of 4,000 feet per minute without delamination or erosion. Sound absorption coefficient for the thickness provided shall be not less than indicated below as determined by procedures of the Acoustical and Board Products Association, mounting No. 6.

OCTAVE PASS BANDS	2	3	4	5	6	7
Mid-frequency, Cycles Per Second	125	250	500	1,000	2,000	4,000
Sound Absorption Coefficient	.25	.48	.67	.88	.89	.79

The density of the lining including any surface coating or facing shall not be less than 1.35 pounds per cubic foot nor greater than 3.3 pounds per cubic foot. The lining composition may be uniform density, graduated density or dual density, coated or uncoated, standard with the manufacturer. Lining shall be not less than 1-1/2 inch thick, nominal, and where applicable shall be of sufficient thickness to be thermally equivalent to the thickness of

insulation specified in section: THERMAL INSULATION FOR MECHANICAL SYSTEMS. Lining shall conform to the fire hazard rating specified for insulation in section: THERMAL INSULATION FOR MECHANICAL SYSTEMS. Duct sizes shown on the drawings shall be increased to compensate for the thickness of the lining used. Acoustical liner shall be provided where indicated on the drawings, and to the extent shown. Acoustical liner will not be provided for glass fiber ductwork.

15.2 Application. The lining shall be applied in cut-to-size pieces attached to the interior of the duct with fire resistant adhesive conforming to Military Specification MIL-A-3316, class 2. Top and bottom pieces shall lap the side pieces and in addition shall be secured with welded pins, adhered clips, metal, nylon or high impact plastic, and speed washers or welding cup-head pins on maximum 12-inch centers. Welded pins, cup-head pins or adhered clips shall not distort the duct, burn through or mar the finish or the surface of the duct. Pins and washers shall be flush with the surface of the duct liner, and all breaks and punctures of the duct liner coating shall be sealed with fire resistant adhesive conforming to Military Specification MIL-A-3316, class 1. All exposed edges of the liner at the duct ends and at other joints where the lining will be subject to erosion shall be coated with a heavy brush coat of fire-resistant adhesive, MIL-A-3316, class 1, to prevent delamination of the glass fibers. The duct liner may also be applied to flat sheet metal with fire-resistant adhesive, MIL-A-3316, class 2, prior to forming duct through the sheet metal brake. The lining at the top and bottom surfaces of the duct shall be additionally secured by welded pins or adhered clips as hereinbefore specified for cut-to-size pieces.

16. INSULATION.

16.1 Factory applied insulation shall be as specified herein under the equipment to be insulated except that refrigerant suction lines shall be insulated with not less than 3/4-inch thick unicellular plastic foam. Insulation except unicellular plastic foam shall comply with the fire hazard rating specified in section: THERMAL INSULATION FOR MECHANICAL SYSTEMS.

16.2 Field applied insulation shall be as specified in section: THERMAL INSULATION FOR MECHANICAL SYSTEMS.

17. EQUIPMENT INSTALLATION. Necessary supports shall be provided for equipment, appurtenances, pipe, and ductwork as required; these include frames or supports for unitary heat pumps and other similar items requiring supports.

18. ACCESS PANELS shall be provided for all concealed valves, controls, dampers, or any item requiring inspection or maintenance. Access panels shall be of sufficient size and so located that the concealed items may be serviced and maintained or completely removed for replacement. Access panels shall be as specified in section: MISCELLANEOUS METAL.

19. CLEANING, TESTING, AND BALANCING.

19.1 Cleaning and Adjusting. Ducts, plenums, and casings shall be thoroughly cleaned of all debris and blown free of all small particles of rubbish and dust before installing outlet faces. Equipment shall be wiped clean, with all traces of oil, dust, dirt, or paint spots removed. Temporary filters shall be provided for all fans that are operated during construction, and after all construction dirt has been removed from the building, new filters shall be installed. Bearings shall be properly lubricated with oil or grease as recommended by the manufacturer. Belts shall be tightened to proper tension. All control valves and other miscellaneous equipment requiring adjustment shall be adjusted to setting indicated or directed. Fans shall be adjusted to the speed indicated by the manufacturer to meet specified conditions.

19.2 Testing.

19.2.1 Ductwork. Ducts, plenums, and casings shall be tested and made substantially airtight at static pressure indicated for the system before covering with insulation or concealing in masonry. The term, substantially airtight, shall be construed to mean that no air leakage is noticeable through the senses of feeling or hearing.

19.3 Balancing.

19.3.1 Duct Systems shall be balanced to produce air quantities within 5 percent of that indicated.

19.4 Performance Tests. After cleaning, balancing, and testing operations have been completed, as hereinbefore specified, the system shall be tested as a whole to see that all items perform as an integral part of the system, and that temperatures and conditions are evenly controlled throughout the building. Corrections and adjustments shall be made as necessary to produce the conditions indicated.

20. TEST DATA.

20.1 General. The Contractor shall provide the Contractor Officer with typewritten schedules of readings taken during the balancing and testing operation indicating the required or specified reading, the first reading taken, and the final balanced reading for the following items.

20.1.1 Fans. Size, type, speed in revolutions per minute, static pressure in inches of water, air quantity in cubic feet per minute, and motor load in amperes.

20.1.2 Air Balance.

20.1.2.1 Coils. Size, face velocity in feet per minute, air condition on-and-off unit wet-bulb and dry-bulb temperatures in degrees F., water-temperature drop through heating coil and water temperature entering coil in degrees F.

20.1.2.2 Ducts. Size, velocity in feet per minute, and air quantity in cubic feet per minute.

20.1.2.3 Air Outlets and Inlets. Size, velocity in feet per minute, and air quantity in cubic feet per minute.

20.1.3 Air-Conditioner Capacity. Size and type of unit, air quantity, air condition on-and-off unit, wet-bulb and dry-bulb degrees F., condensing temperature.

20.2 Control Settings. The actual on-site setting of all automatic controls including thermostats, safety controls, minimum damper settings, fan-safety thermostats, pressure controls, temperature controls, and other similar items shall be provided in the form of a typed tabulated list indicating type of control, location, setting, and function.

21. PAINTING AND FINISHING.

21.1 Factory Coating. Equipment and component items, when fabricated from ferrous metal, shall be factory finished with the manufacturer's standard finish except that items located outside the buildings shall have weather resistant finishes that will withstand 500 hours of exposure to the salt spray test specified in method 6061 of Federal Standard No. 141 using a 20 percent sodium chloride solution. Immediately after completion of the test, the specimen shall show no sign of blistering, wrinkling, cracking, or loss of adhesion and no sign of rust creepage beyond 1/8 inch on either side of the scratch mark.

21.2 Field Painting. Painting required for surfaces not otherwise specified and finish painting of items only primed at the factory, specified in section: PAINTING, GENERAL.

22. OPERATING AND MAINTENANCE INSTRUCTIONS.

22.1 Bound Instructions. Six complete sets of instructions containing the manufacturer's operating and maintenance instructions for each piece of equipment shall be furnished to the Contracting Officer. Each set shall be permanently bound and shall have a hard cover. One complete set shall be furnished at the time the test procedure is submitted, and the remaining sets shall be furnished before the contract is completed. The following identification shall be inscribed on the covers: the words "OPERATING AND MAINTENANCE INSTRUCTIONS," the name and location of the building, the name of the Contractor and the contract number. Flysheet shall be placed before instructions covering each subject. The instruction sheets shall be approximately 8-1/2 by 11 inches, with large sheets of drawings folded in. The instructions shall include, but shall not be limited to, the following:

System layout showing piping, valves, and controls.

Approved wiring and control diagrams, with data to explain the detailed operation and control of each component.

A control sequence describing startup, operation and shutdown.

Operating and maintenance instructions for each piece of equipment, including lubrication instructions.

Manufacturer's bulletins, cuts and descriptive data.

Parts lists and recommended spare parts.

22.2 Framed Instructions. Approved wiring and control diagrams showing the complete layout of the entire system, including equipment, piping, valves and control sequence, framed under glass or in approved laminated plastic, shall be posted, where directed. In addition, condensed operating instructions explaining preventive maintenance procedures, methods of checking the system for normal safe operation, and procedures for safely starting and stopping the system shall be prepared in typed form, framed as specified above for the wiring and control diagrams and posted beside the diagrams. Proposed diagrams, instructions, and other sheets shall be submitted for approval prior to posting. The framed instructions shall be posted before acceptance-testing of the systems.

22.3 Field Instructions. Upon completion of the work and at a time designated, the services of one or more project engineers shall be provided by the Contractor for a period of not less than 2 days to instruct the representative of the Government in the operation and maintenance of the air conditioning system. These field instructions shall cover all the items contained in the bound instructions.

* * * * *

SECTION 16A

ELECTRICAL WORK, INTERIOR

Index

1. Applicable Publications
2. General
3. Materials and Equipment
4. Approval of Materials and Equipment
5. Shop Drawings
6. Workmanship
7. Grounding
8. Wiring Methods
9. Boxes and Supports
10. Device Plates
11. Receptacles
12. Wall Switches
13. Service Equipment
14. Panelboards
15. Cabinets
16. Fuses
17. Underground-Service Conduits
18. Motors
19. Motor Control
20. Motor-Disconnect Means
21. Lamps and Lighting Fixtures
22. Equipment Connections
23. Painting and Finishing
24. Tests
25. Guarantee

1. APPLICABLE PUBLICATIONS. The following publications of the issues listed below, but referred to thereafter by basic designation only, form a part of this specification to the extent indicated by the references thereto.

1.1 Federal Specifications.

J-C-30A & Am-1	Cable and Wire, Electrical (Power, Fixed Installation)
L-C-530B & Am-1	Coating, Pipe, Thermoplastic Resin or Thermosetting Epoxy
L-P-1035A	Plastic Molding Material, Vinyl Chloride Polymer and Vinyl Chloride-Vinyl Acetate Copolymer, Rigid
L-T-0075 (ARMY-MO) & Am-1	Tape, Pipe-Coating; Pressure-Sensitive and Laminated
L-T-1512A	Tape, Pressure Sensitive Adhesive Pipe Wrapping
W-B-30A & Int. Am-1	Ballast, Fluorescent Lamp
W-C-375B/GEN	Circuit Breakers, Molded Case; Branch Circuit and Service
W-C-583b	Conduit Boxes and Outlet Fittings, Floor, (for Rigid Metal Conduit)
W-C-586B & Am-1	Conduit Outlet Boxes, Bodies, and Entrance Caps, Electrical: Cast Metal - for Shore Use
W-C-596D/GEN & Suppl. 1	Connector, Plug, Receptacle and Cable Outlet, Electrical Power
W-C-1094A	Conduit and Conduit Fittings Plastic, Rigid
W-F-406b & Int. Am-1 (GSA-FSS)	Fittings for Cable, Power, Electrical and Conduit, Metal, Flexible
W-F-408C & Am-1	Fittings for Conduit, Metal, Rigid, (Thick-Wall and Thin-Wall (EMT) Type)

W-F-791E/GEN & Am-1	Fuse, Plug (General Specification)
W-F-1814 & Suppl. 1	Fuse, Cartridge, High Interrupting Capacity (General Specification)
W-F-1662A & Int. Am-2 (GSA-FSS)	Fixture, Lighting (Fluorescent, Alternating-Current, Recessed and Surface Ceiling)
W-J-800c & Am-3	Junction Box; Extension, Junction Box; Cover, Junction Box (Steel, Cadmium, or Zinc-Coated)
W-J-805 & Am-2	Junction Box and Cover, Junction Box (Nonmetallic)
W-L-00101G (GSA-FSS) & Am-1	Lamp, Incandescent, (General Specification)
W-L-00116D (GSA-FSS)	Lamps, Fluorescent (General Specification)
W-L-142a & Int. Am-4	Lampholder, Adapter, and Shadeholder, Medium-Screw-Shell, 125, 250, and 600 Volts
W-P-115a & Am-3	Panel, Power Distribution
W-P-455a & Am-6	Plate, Wall Electrical
W-S-610C & Am-1	Splice Conductor
W-S-865c & Int. Am-2 (GSA-FSS)	Switch, Box, (Enclosed), Surface-Mounted
CC-M-1807	Motor, Alternating Current, Fractional and Integral Horsepower (500 Hp and Smaller)
HH-I-510D	Insulation Tape, Electrical, Friction
HH-I-553C & Am-1	Insulation Tape, Electrical (Rubber Natural and Synthetic)
HH-I-595C	Insulation Tape, Electrical, Pressure-Sensitive Adhesive, Plastic
WW-C-563A	Conduit, Metal, Rigid: Electrical, Thin-Wall Steel Type (Electrical Metallic Tubing); Straight Lengths, Elbows, and Bends
WW-C-566C	Conduit, Metal, Flexible
WW-C-581E	Conduit, Metal, Rigid, and Intermediate; and Coupling, Elbow, and Nipple, Electrical Conduit: Steel, Zinc Coated

1.2 Military Specification.

MIL-P-15147C & Am-1	Primer and Enamel, Coat Tar

1.3 American National Standards Institute (ANSI) Standard.

C97.1-1972	Low-Voltage Cartridge Fuses 600 Volts or Less

1.4 National Electrical Manufacturers Association (NEMA) Standards.

RI 2-1966 (R 1976)	General-Purpose and Communication Battery Chargers
RN 1-1974	Polyvinyl-Chloride Externally Coated Galvanized Rigid Steel Conduit and Electrical Metallic Tubing
ST 20-1972	Dry-Type Transformers for General Applications
TC 6-1974	Plastic Utilities Duct for Underground Installation

1.5 National Fire Protection Association (NFPA) Publication.

No. 70-1975	National Electrical Code

Underwriters Laboratories, Inc. (UL) Standards.

Building Materials Directory (January 1977 with Quarterly Supplements).

UL 20	General-Use Snap Switches (Oct 15, 1974; Rev. thru Dec 6, 1976)
UL 50	Cabinets and Boxes (June 20, 1975; Rev. thru Sep 23, 1977)
UL 57	Electric Lighting Fixtures (Aug 30, 1972; Rev. thru Oct 25, 1977)
UL 360	Liquid-Tight Flexible Steel Conduit (April 20, 1976; Rev. Oct 21, 1977)
UL 508	Industrial Control Equipment (May 9, 1977; Rev. thru Aug 19, 1977)
UL 845	Electric Motor Control Centers (Nov 22, 1971; Rev. thru Feb 26, 1975)
UL 857	Busways and Associated Fittings (Oct 27, 1977; Rev. Oct 28, 1977)
UL 869	Service Equipment (Aug 19, 1977; Rev. Aug 20, 1977)
UL 1242	Outline of Proposed Investigation for Intermediate Metal Conduit Type I and Type II (Apr 1976; Rev thru May 24, 1977)

2. GENERAL.

2.1 Rules. The installation shall conform to the requirements of the National Electrical Code, and the requirements specified herein. In case of any differences or discrepancies between the specifications and the National Electrical Code, the specifications shall govern.

2.2 Coordination. The contract drawings indicate the extent and the general location and arrangement of equipment, conduit, and wiring. The contractor shall study building plans and details so that the outlets and equipment will be properly located and readily accessible. Lighting fixtures, equipment, and outlets shall be located to avoid interference with mechanical or structural features; otherwise, lighting fixtures shall be symmetrically located according to the room arrangement. Raceways, junction and outlet boxes, and lighting fixtures shall not be supported from sheet metal roof decks. If any conflicts occur necessitating departures from the contract drawings, details of departures and reasons therefor shall be submitted as soon as practicable for written approval of the Contracting Officer.

2.3 Capacities of equipment and material shall be not less than those indicated.

3. MATERIALS AND EQUIPMENT shall conform to the respective publications and other requirements specified below. Other materials and equipment shall be as specified elsewhere herein and as shown on the drawings and shall be the products of manufacturers regularly engaged in the manufacture of such products.

3.1 Ballast, Fluorescent Lamp. High-power-factor type conforming to Federal Specification W-B-30. In addition, ballasts for 40-watt and larger lamps shall be class P and shall be automatic-resetting type.

3.2 Cable, Flexible. Federal Specification J-C-30.

3.2.1 Metallic Armored Cable. Type ACHH or ACT.

3.2.2 Service Entrance Cable. Type SE.

3.3 Cabinets for Telephone and Signal Systems. Underwriters Laboratories Standard UL 50.

3.4 Circuit Breakers.

3.4.1 Molded-case Circuit Breakers. Federal Specification W-C-375.

3.5 Conductors, Insulated. Federal Specification J-C-30, types as specified.

3.6 Conduit

3.6.1 Flexible Steel Conduit. Federal Specification WW-C-566 and UL 360.

3.6.2 Zinc-coated Rigid Steel Conduit. Federal Specification WW-C-581.

3.6.3 Rigid Plastic. Federal Specification W-C-1094 and NEMA Standard TC 6.

3.6.4 Intermediate Metal Conduit (IMC). UL 1242, type I.

3.6.5 Conduit Coatings.

3.6.5.1 Plastic Resin System. Federal Specification L-C-530, type I; or L-P-1035, composition, type, class, and grade suitable for the purpose, thickness as required for the type I system of Federal Specification L-C-530; or NEMA Standard RN 1, type A-40.

3.6.5.2 Epoxy System. Federal Specification L-C-530, type II.

3.6.5.3 Coal-tar System. Primer and enamel conforming to Military Specification MIL-P-15147. The thickness of the dry coating system shall be not less than 1/16 inch at any point.

3.6.5.4 Pipe-wrapping Plastic Tape. Federal Specification L-T-75, type II, or L-T-1512, type I.

3.7 Connectors, Wire Pressure. Federal Specification W-S-610.

3.8 Device Plates. Federal Specification W-P-455.

3.9 Battery Chargers. NEMA Standard RI 2, Type B or C.

3.10 Fittings, Cable and Conduit. Federal Specifications W-F-406 and W-F-408.

3.11 Fixtures.

3.11.1 Fluorescent, General-purpose. Federal Specifications W-F-414, type II, style A, B, C and D, and W-F-1662.

3.11.2 Incandescent Lighting Fixtures. UL 57.

3.11.3 Fluorescent, General-purpose, surface and recessed mounted. Federal Specification W-F-1662.

3.12 Fuses.

3.12.1 Cartridge Fuses. Nonrenewable, dual element, time lag type, ANSI C97.1-1972, class H.

3.12.2 Fuse Cartridge, High Interrupting Capacity. Federal Specification W-F-1814, class G, J, K1, K5, K9, and L.

3.12.3 Plug Fuses. Tamperproof, instantaneous, time delay, Federal Specification W-F-791 max. 30A.

3.13 Lamps.

3.13.1 Fluorescent Lamps. Federal Specification W-L-116.

3.13.2 Incandescent Lamps, Large. Federal Specification W-L-101.

3.14 Motors, AC, Fractional and Integral Hp (500 Hp and Smaller). Federal Specification CC-M-1807.

3.15 Motor Controls and Motor Control Centers. NEMA Pub. No. ICS, Underwriters Laboratories, Inc., UL Standard 508 and UL Standard 845.

3.16 Outlets.

3.16.1 Conduit, Cast Metal or Malleable Metal. Federal Specification W-C-586.

3.16.2 Floor. Federal Specification W-C-583.

3.17 Outlet Boxes.

3.17.1 Sheet-steel Outlet Boxes. Federal Specification W-J-800.

3.18 Panelboards. Dead-front construction, Federal Specification W-P-115.

3.18.1 Lighting and Appliance Branch Circuits, feeder and distribution panelboards, class 1, type as specified hereinafter.

3.19 Receptacles. Federal Specification W-C-596.

3.20 Service Equipment. Federal Specification W-S-865, type NDD or NDS as indicated, Federal Specification W-C-375, and Underwriters Laboratories, Inc., Standard UL 869.

3.21 Sockets, Medium-screw Base. Federal Specification W-L-142.

3.22 Splice, Conductor. Federal Specification W-S-610.

3.23 Switches.

3.23.1 Enclosed Safety Switches. Federal Specification W-S-865, type NDS or NDD as indicated.

3.23.2 Snap Switches. UL Standard 20.

3.23.3 Deleted.

3.23.4 Deleted.

3.24 Tape.

3.24.1 Friction Tape. Federal Specification HH-I-510.

3.24.2 Plastic Tape. Federal Specification HH-I-595.

3.24.3 Rubber Tape. Federal Specification HH-I-553.

3.25 Transformers.

3.25.1 Dry-type Specialty Transformers. NEMA Pub. No. ST 20 as modified herein.

3.25.2 Dry-type Transformers for General Applications. NEMA Pub. No. St 20.

3.26 Tubing, Electrical, Zinc-coated Metallic Steel. Federal Specification WW-C-563.

4. APPROVAL OF MATERIALS AND EQUIPMENT will be based on the manufacturer's published data.

4.1 The Label or Listing of the Underwriters Laboratories, Inc., will be accepted as evidence that the materials or equipment conform to the applicable standards of that agency. In lieu of this listing the contractor shall submit a statement from a nationally recognized, adequately equipped testing agency indicating that the items have been tested in accordance with required procedures and that the materials and equipment comply with all contract requirements.

4.2 A Manufacturer's Statement indicating complete compliance with the applicable Federal Specification, Military Specification, or standard of the American Society for Testing and Materials, National Electrical Manufacturers, or other commercial standard, is acceptable.

5. SHOP DRAWINGS shall be submitted for equipment not completely identifiable by information submitted in the materials and equipment lists, in accordance with requirements contained in the SPECIAL PROVISIONS, and will be submitted for but not limited to cabinets, and panelboards

6. WORKMANSHIP. All materials and equipment shall be installed in accordance with recommendations of the manufacturer as approved by the Contracting Officer, to conform with the contract documents. The installation shall be accomplished by workmen skilled in this type of work.

7. GROUNDING. Except where specifically indicated otherwise, all exposed non-current-carrying metallic parts of electrical equipment, metallic raceway systems, grounding conductor in nonmetallic raceways and neutral conductor of the wiring system shall be grounded. The ground connection shall be made at the main service equipment and shall be extended to the point of entrance of the metallic water service. Connection to the water pipe shall be made by a suitable ground clamp. If flanged pipes are encountered, connection shall be made with the lug bolted to the street side of the flange connection. If the metallic water service is coated with an insulating material or there is no metallic water service to the building, ground connection shall be made to driven rods on the exterior of the building.

7.1 UFER Ground System shall consist of a No. 3/0 bare copper ground conductor connected to a UFER ground mat placed in contact with the earth in the bottom of the structure foundation.

7.1.1 UFER Ground Mat. Form a continuous conductor mat by serpentining No. 3/0 bare copper conductor of minimum length 200 feet in contact with the earth in the bottom of the structure foundation footing. The maximum resistance of the ground mat shall not exceed 5 ohms under normally dry conditions. If this ground resistance cannot be obtained with the 200 feet of mat conductor, additional mat shall be installed in contact with the earth in the bottom of the slab-on-grade pour.

7.2 Ground Bus shall be provided in the electrical-equipment room as indicated on the drawings. Non-current-carrying metal parts of electric equipment shall be effectively grounded by bonding to the bus. The ground shall be bonded to both the system neutral water-service ground, and to the UFER ground system (see 7.1.1) as specified above. The ground bus shall be bare conductor or flat copper in one piece, if practicable. Connections and splices shall be of the brazed, welded, bolted, or pressure-connector type, except that pressure connectors or bolted connections shall be used for connections to removable equipment.

8. WIRING METHODS.

8.1 General. Unless otherwise indicated, wiring shall consist of insulated conductors installed in rigid zinc-coated-steel conduit, electrical metallic tubing, or intermediate metal conduit, type I.

8.2 Conduit and Tubing Systems shall be installed as indicated. Minimum size of raceways shall be 1/2 inch. Electrical metallic tubing may be installed in concrete and grout in dry locations. EMT will not be installed in or below slab-on-grade or in other damp or wet locations. IMC type I may be used as an option for rigid steel conduit in areas as permitted by the National Electrical Code, except that IMC will not be used within slab-on-grade. IMC installed below slab-on-grade will be corrosion protected as required for rigid steel conduit by this specification. Electrical metallic tubing may be installed only within buildings. Raceways shall not be installed under the firepits of boilers and furnaces and shall be kept 6 inches away from parallel runs of flues, steam pipes and hot-water pipes. Raceways shall be concealed where possible within finished walls, ceilings, and floors other than slabs-on-grade.

8.2.1 Installing Below Slab-on-grade or in Ground. Raceways shall not be installed horizontally within concrete slabs-on-grade. For slab-on-grade construction, horizontal runs of rigid plastic or coated rigid steel conduit shall be installed below the floor slab. Conduit passing vertically through slabs-on-grade shall be rigid steel. Steel conduits installed below slab-on-grade or in the ground shall be field-wrapped with 0.010-inch-thick pipe-wrapping plastic tape applied with a 50-percent overlap, or shall have a factory-applied plastic resin, epoxy, or coal-tar coating system. Zinc coating may be omitted from steel conduit which has the factory-applied epoxy system.

8.2.1.1 Field Made Joints, Fittings, Abrasions, and Coating Holidays shall be coated with material equivalent to the above.

8.2.2 Installing in Slabs Other than on Grade. Conduits shall be installed as close to the middle of concrete slabs as practicable without disturbing the reinforcement. Outside diameter shall not exceed 1/3 of the slab thickness and conduits shall be spaced not closer than 3 diameters on centers except at cabinet locations where the slab thickness shall be increased as approved by the Contracting Officer. Raceways crossing expansion joints in concrete slabs shall be provided with suitable expansion fittings or other suitable means to compensate for the building expansion and contraction and to provide for continuity of grounding. Electrical metallic tubing installed in concrete or grout shall be provided with concrete tight fittings.

8.2.3 Exposed Raceways shall be installed parallel or perpendicular to walls, structural members, or intersections of vertical planes and ceilings.

8.2.4 Changes in Direction of runs shall be made with symmetrical bends or cast-metal fittings. Field-made bends and offsets shall be made with an approved hickey or conduit-bending machine. Crushed or deformed raceways shall not be installed. Trapped raceways in damp and wet locations shall be avoided where possible. Care shall be taken to prevent the lodgment of plaster, dirt, or trash in raceways, boxes, fittins and equipment during the course of construction. Clogged raceways shall be entirely freed of obstructions or shall be replaced.

8.2.5 Supports. Raceways shall be securely supported and fastened in place at intervals of not more than 10 feet with pipe straps, wall brackets, hangers, threaded C-clamps with retainers, or ceiling trapeze. Fastenings shall be by wood screws or screw-type nails to wood; by toggle bolts on hollow masonry units; by expansion bolts on concrete or brick; by machine screws, welded threaded studs, heat-treated or spring-steel-tension clamps on steel work. Nail-type nylon anchors or threaded studs driven in by a powder charge and provided with lock washers and nuts may be used in lieu of expansion bolts or machine or wood screws. Raceways or pipe straps shall not be welded to steel structures. Holes cut to a depth of more than 1-1/2 inch in reinforced concrete beams or toa depth of more than 3/4 inch in concrete joists shall avoid cutting the main reinforcing bars. Holes not used shall be filled. In partitions of light steel construction, sheet-metal screws may be used, and bar hangars may be attached with saddle ties of not less than No. 16 AWG double-strand zinc-coated steel wire. In suspended-ceiling construction, only lighting-system-branch-circuit raceways shall be fastened to the ceiling supports. Conduits shall be fastened to all sheet-metal boxes and cabinets with two locknuts where required by the National Electrical Code, where insulating bushings are used, and where bushings cannot be brought into firm contact with the box; otherwise, a single locknut and bushing may be used. Bushings shall be installed on the ends of all conduits and shall be of the insulating type where required by the National Electrical Code. Threadless fittings for electrical metallic tubing shall be of a type approved for the conditions encountered; those installed in wet locations shall be raintight. A pull wire shall be inserted in each empty raceway in which wiring is to be installed by others if the raceway is more than 50 feet in length and contains more than the equivalent of 2 90-degree bends, or where the raceway is more than 150 feet in length. The pull wire shall be of No. 14 AWG zinc-coated steel, or of plastic having not less than 200-pound tensile strength. Not less than 10 inches of slack shall be left at each end of the pull wire.

8.2.6 Telephone Raceways indicated shall be installed in accordance with the previous requirements for conduit and tubing and with the additional requirements that no length of run shall exceed 50 feet for 1/2-inch and 3/4-inch sizes, and 100 feet for 1-inch or larger sizes and shall not contain more than 2 90-degree bends or the equivalent. Additional pull or junction boxes shall be installed to comply with these limitations whether or not indicated. Inside radii of bends in conduits of one inch size or larger shall be not less than 10 times the nominal diameter. A pull wire shall be installed in all conduits over 50 feet in length; in all conduits regardless of length which contain more than the equivalent of one 90 degree bend; and in all flexible conduits.

8.3 Conductors in raceways and cable shall be of copper, except that aluminum conductors may be used as an equivalent for copper conductors of No. 6 AWG and larger. Aluminum conductors shall have ampacity of not less than the copper conductors. Solderless pressure connectors, properly taped and wire connectors of insulating material hall be used for all splices where practicable. Pressure connectors for aluminum conductors shall have tinned aluminum bodies. Aluminum contact surfaces of conductors and connectors shall be cleaned and covered with antioxidant compound prior to making of connections. Wire connectors of insulating material or solderless pressure connectors properly taped shall be utilized for all splices where possible. Soldered mechanical joint insulated with tape shall be kept to a minimum.

8.3.1 Sizes shall be not less than indicated. Branch-circuit conductors shall be not smaller than No. 12 American Wire Gage. Conductors for branch circuits of 120 volts more than 100 feet long and of 277 volts more than 230 feet long, from panel to load center, shall be No. 10 AWG. Class 1 remote-control and signal-circuit conductors shall be not less than No. 14 AWG. Class 2 low-energy remote-control and signal-circuit conductors shall be not less than No. 16 AWG.

8.3.2 Insulation. Insulated conductors shall conform to the requirements of the National Electrical Code for application.

8.3.3 Deleted.

8.3.4 Conductor Identification in multiphase systems serving single-phase loads shall be color coded. The color of the insulation of the ungrounded conductors of different voltage systems shall be as follows:

120/208 volt, 3-phase: red, black, and blue;
277/480 volt, 3-phase: yellow, brown, and orange;
120/240 volt, single phase: red and black.

Color coding is not required for 3-phase loads.

Control circuit conductor identification shall be made by color-coded insulated conductors, plastic-coated self-sticking printed markers, permanently attached stamped metal foil markers, or equivalent means as approved by the Contracting Officer. Conductor identification shall be provided within each enclosure where a tap, splice, or termination is made. Control circuit terminals of equipment shall be properly identified. Terminal and conductor identification shall match that shown on approved shop drawings. Hand lettering or marking is not acceptable.

9. BOXES AND SUPPORTS. Boxes shall be provided in the wiring or raceway systems wherever required for pulling of wires, making connections, and mounting of devices or fixtures. Boxes for metallic raceways shall be of the cast-metal hub type when located in normally wet locations, when surface mounted on outside of exterior surfaces, and when installed exposed up to 7 feet above interior floors and walkways. Boxes in other locations shall be sheet steel. In partitions of light steel construction bar hangers between metal studs or metal stud brackets with 1-inch-long studs shall be used to secure boxes to the building structure. Each box shall have the volume required by the National Electrical Code for the number of conductors enclosed in the box. Boxes for mounting lighting fixtures shall be not less than 4 inches except that smaller boxes may be installed as required by fixture configuration, as approved. Boxes installed for concealed wiring shall be provided with suitable extension rings or plaster covers, as required. Boxes for use in masonry-block or tile walls shall be square-cornered tile-type, or standard boxes having square-cornered tile-type, covers. Cast-metal boxes installed in wet locations and boxes installed flush with the outside of exterior surfaces shall be gasketed. Separate boxes shall be provided for flush or recessed fixtures when required by the fixture terminal operating temperature, and fixtures shall be readily removable for access to the boxes unless ceiling access panels are provided. Boxes and pendants for surface-mounted fixtures or suspended ceilings shall be supported independently of the ceiling supports. Boxes and supports shall be fastened to wood with wood screws or screw-type nails of equal holding strength, with bolts and metal expansion shields on concrete or brick, with toggle bolts on hollow masonry units, and with machine screws or welded studs on steel work. Threaded studs driven in by powder charge and provided with lockwashers and nuts, or nail-type nylon anchors may be used in lieu of wood screws, expansion shields, or machine screws. In open overhead spaces, cast metal boxes threaded to raceways need not be separately supported except where used for fixture support; cast metal boxes having threadless connectors and sheet metal boxes shall be supported directly from the building structure or by bar hangers. Cast metal boxes with 3/32-inch wall thickness are acceptable. Where bar hangers are used, the bar shall be attached to raceways on opposite sides of the box and the raceway shall be supported with an approved type fastener not more than 24 inches from the box. In partitions of light steel constructions, box hangers shall be used between metal studs to secure boxes to the building structure. Penetration of more than 1-1/2 inches into reinforced-concrete beams or more than 3/4 inch into reinforced-concrete joists shall avoid cutting any main reinforcing steel.

9.1 Boxes for Use with Raceway Systems shall not be less than 1-1/2 inches deep except where shallower boxes required by structural conditions are approved. Boxes for other than lighting-fixture and telephone outlets shall be not less than 4 inches square except that 4- by 2-inch boxes may be used where only one raceway enters the outlet. Minimum size boxes for telephone outlets shall be not smaller than 4-11/16 inches square and 2-1/8 inches deep.

9.2 Pull Boxes of not less than the minimum size required by the National Electrical Code shall be constructed of code-gage aluminum or galvanized sheet steel, except where cast-metal boxes are required in locations specified above. Boxes shall be furnished with screw-fastened covers. Where several feeders pass through a common pull box, the feeders shall be tagged to indicate clearly the electrical characteristics, circuit number, and panel designation.

9.3 Clock outlet, for use in other than a wired clock system, shall consist of an outlet box, a plaster cover where required, and a single 15 ampere, 125 volt, 2-pole, 3-wire, grounded type receptacle with clock-outlet plate. The receptacle shall be recessed sufficiently within the box to allow the complete insertion of a standard cap, flush with the plate. A suitable clip or support for hanging the clock shall be secured to the top of the plate. Material and finish of the plate shall be as specified in paragraph: DEVICE PLATES.

9.4 Floor Outlets shall be adjustable, and each outlet shall consist of a cast-metal body with threaded openings for conduits, adjustable ring, flange ring, and cover plate with 1/2-inch threaded plug. Each telephone outlet shall consist of a horizontal cast housing with a 1-inch bushed side opening. Each receptacle outlet shall consist of a horizontal cast housing with a duplex receptacle as specified hereinafter. Gaskets shall be used where necessary to insure a watertight installation.

9.5 Conduits stubbed up through concrete floors for connections to freestanding equipment shall be provided with a short elbow and an adjustable top or coupling threaded inside for plugs, set flush with the finished floor. Wiring shall be extended in rigid threaded conduit to equipment, except that where required, flexible conduit may be used 6 inches above the floor. Screwdriver-operated threaded flush plugs shall be installed in conduits from which no equipment connections are made.

10. DEVICE PLATES of the one-piece type shall be provided for all outlets and fittings to suit the devices installed. Plates on unfinished walls and on fittings shall be of zinc-coated sheet steel, cast metal, or impact resistant plastic having rounded or beveled edges. Plates on finished walls shall be of satin finish corrosion resistant steel or of satin finish chromium plated brass. Screws shall be of metal with countersunk heads, in a color to match the finish of the plate. Plates shall be installed with all four edges in continuous contact with finished wall surfaces without the use of mats or similar devices. Plaster fillings will not be permitted. Plates shall be installed with an alinement tolerance of 1/16 inch. The use of sectional-type device plates will not be permitted. Plates installed in wet locations shall be gasketed. Device plates for telephone and intercommunication outlets shall have a 3/8-inch bushed opening in center.

11. RECEPTACLES.

11.1 Duplex Receptacles shall be rated 20 amperes, 125 volts, 2-pole, 3-wire, grounded type with polarized parallel slots, in accordance with Federal Specification W-C-596. Bodies shall be of brown phenolic compound supported by mounting strap having plaster ears. Contact arrangement shall be such that contact is made on 2 sides of an inserted blade. Receptacle shall be side- or back-wired with 2 screws per terminal. The third grounding pole shall be connected to the metal mounting yoke.

11.2 Switched Duplex Receptacles shall be similar to those specified in paragraph: Duplex receptacles above, except that the ungrounded pole of each receptacle shall be provided with a separate terminal. Top receptacle shall be switched when installed.

11.3 Weatherproof receptacles shall consist of a duplex receptacle as specified in paragraph: Duplex Receptacles, mounted in a box with a gasketed, weatherproof, cast-metal cover plate and cap over each receptacle opening. The cap shall be provided with a spring-hinged double flap one flap for each receptacle outlet.

11.4 Special-purpose or Heavy-duty Receptacles shall be of the type and of ratings and number of poles indicated or required for the anticipated purpose. Contact surfaces may be either round or rectangular. One appropriate straight or angle-type plug shall be furnished with each receptacle. Locking facilities, where indicated, shall be accomplished by the rotation of the plug.

12. WALL SWITCHES shall be of the totally enclosed tumbler type with bodies of phenolic compound. Handles shall be brown. Wiring terminals shall be of the screw type or of the solderless pressure type having suitable conductor-release arrangement. Not more than one switch shall be installed in a single-gang position. Switches shall be rated 20-ampere 120-volt-277-volt for use on alternating current only. Pilot lights indicated on the drawings shall consist of yoke-mounted candelabra-base sockets rated at 75 watts, 125 volts, and fitted with glass or plastic jewels. A clear 6-watt lamp shall be furnished and installed in each pilot switch. Jewels for use with switches controlling motors shall be green, and jewels for other purposes shall be red.

12.1 Dimmer Switches shall be solid state silicon gated rectifier type switch rated at 2000 watts (max.) incandescent, 120V a.c., 16.7 amperes. Switch shall be rotary type accomplishing gradual control range from full intensity to complete OFF, Max. ambient operating temperature of 120 degrees F. double-gang switch box mounting with moderating for ganging dimmers horizontally with a max. single-gang box placed between double-gang boxes. Rotary switch and plate shall be black finish.

13. SERVICE EQUIPMENT. Service-disconnecting means shall be of the enclosed circuit breaker or fusible safety switch type with external handle for manual operation. Enclosures shall be sheet metal with hinged cover for surface mounting unless otherwise indicated. Multipole circuit breakers shall be of the common-trip type having a single operating handle but for sizes of 100 amperes or less may consist of single-pole circuit breakers permanently assembled at the factory into a multipole unit having an internal, mechanical, nontamperable common trip mechanism and external handle ties.

14. PANELBOARDS. Lighting and appliance branch-circuit panelboards shall be circuit-breaker equipped, type I. Distribution, power, or feeder panelboards shall be circuit-breaker equipped, type I. Circuit-breaker interrupting capacities shall conform to Federal Specification W-C-375 unless otherwise indicated. Single-pole breakers shall be full module size; 2 poles shall not be installed in a single module. Multipole circuit breakers shall be of the common-trip type having a single operating handle but for sizes of 100 amperes or less may consist of single-pole circuit breakers permanently assembled at the factory into a multipole unit having an internal, mechanical, nontamperable common trip mechanism and external handle ties. Circuit breakers and switches used for motor-circuit disconnects and not in sight of the motor controller shall be capable of being locked in the open position. Wiring gutters dimensions for panelboards shall be in accordance with the requirements of the National Electrical Code. Panelboards shall not exceed 78 inches in height and shall be so mounted that the height of the top operating handle will not exceed 6 feet 6 inches from the floor. Locks shall be keyed alike. Nameplates shall be as approved. Directories shall be typed to indicate load served by each circuit and mounted in holder behind protective covering.

15. CABINETS. Cabinets for telephone systems shall have boxes constructed of code-gage zinc-coated sheet steel. Cabinets shall be constructed with exterior dimensions not less than those indicated. Each trim shall be fitted with hinged door and flush catch. Doors shall provide maximum-size openings to the box interiors. Boxes shall be provided with a 5/8-inch plywood backboard having a 2-coat insulating varnish finish.

16. FUSES. The contractor shall furnish a complete set of fuses for all switches, panels, switchgear, and control centers as required. Time-current-tripping characteristics of fuses serving motors or connected in series with circuit breakers shall be coordinated for the proper operation. Fuses shall have a voltage rating not less than the circuit voltage.

16.1 Plug Fuses shall be the nonrenewable time-delay type, and shall be used for circuits rated 125 volts or less and 30 amperes or less.

16.2 Cartridge Fuses shall have an interrupting rating not less than 200,000 amperes. At 500 percent current, cartridge fuses shall not blow in less than 10 seconds. Cartridge fuses shall be used for circuits rated in excess of 30 amperes, 125 volts, except where current-limiting fuses are indicated.

16.3 Cartridge Fuses, Current-limiting Type, where indicated, shall have tested interrupting capacity not less than 100,00 amperes. Fuse-holders shall be the type that will reject all class H fuses.

17. UNDERGROUND-SERVICE CONDUITS. Empty conduits for telephone cable shall be installed as indicated.

18. MOTORS furnished under (this and) other sections of these specifications shall be of sufficient size for the duty to be performed and shall not exceed the full-load rating when the driven equipment is operating at specified capacity under the most severe conditions likely to be encountered. Unless otherwise specified, all motors shall have open frames, and continuous-duty classification based on a 40 degrees C. ambient temperature of reference. Polyphase motors shall be squirrel-cage type, having normal-starting-torque and low-starting-current characteristics, unless other characteristics are specified elsewhere. The horsepower ratings indicated on electrical plans are for guidance only and do not limit the equipment size. When electrically driven equipment furnished under other sections of these specifications materially differs from the contemplated design, the contractor shall make the necessary adjustments to the wiring, disconnect devices, and branch-circuit protection to accommodate the equipment actually installed.

19. MOTOR CONTROL. Each motor or group of motors requiring a single control and not controlled from a motor-control center shall be provided with a suitable controller and devices that will perform the functions as specified for the respective motors. Each motor of 1/8 horsepower or larger shall be provided with thermal-overload protection. Polyphase motors shall have overload protection in each ungrounded conductor. The overload-protection device shall be provided either integral with the motor or controller, or shall be mounted in a separate enclosure. Unless otherwise specified, the protective device shall be of the manually reset type. Single- or double-pole tumbler switches specifically designed for alternating-current operation only may be used as manual controllers for single-phase motors having a current rating not in excess of 80 percent of the switch rating. Automatic-control devices such as thermostats, float or pressure switches may control the starting and stopping of motors directly, provided the devices used are designed for that purpose and have an adequate horsepower rating. When the automatic-control device does not have such a rating a magnetic starter shall be used, with the automatic-control device actuating the pilot-control circuit. When combination manual-and-automatic control is specified and the automatic-control device operates the motor directly, a double-throw, three-position tumbler or rotary switch shall be provided for the manual control; when the automatic-control device actuates the pilot control circuit of a magnetic starter, the latter shall be provided with a three-position selector switch marked Hand Off-Automatic. Connections to the selector switch shall be such that only the normal automatic regulatory control devices will be bypassed when the switch is in the Hand position; all safety control devices, such as low- or high-pressure cutouts, high-temperature cutouts, and motor-overload protective devices, shall be connected in the motor-control circuit in both the Hand and the Automatic positions of the selector switch. Control circuit connections to any Hand-Off-Automatic switch or to more than one automatic regulatory control device shall be made in accordance with wiring diagram approved by the Contracting Officer unless such diagram is included on the drawings.

19.1 Contacts in Miscellaneous Control Devices such as float switches, pressure switches, and auxiliary relays shall have current and voltage ratings in accordance with NEMA Pub. No. ICS for class B, 300 volt relays.

20. MOTOR-DISCONNECT MEANS. Each motor shall be provided with a disconnecting means under this section of the specifications, when required by the National Electrical Code even though not indicated. For single-phase motors, a single- or double-pole toggle switch, rated only for alternating current, will be acceptable for capacities less than 30 amperes, provided the ampere rating of the switch is at least 125 percent of the motor rating. Enclosed safety switches shall be horsepower rated in conformance with table III of Federal Specification W-S-865. Switches shall disconnect all ungrounded conductors.

21. LAMPS AND LIGHTING FIXTURES of types and sizes as indicated shall be furnished and installed complete. Fixtures may be provided with No. 18 AWG conductors in 3/8-inch flexible metal conduits not over 6 feet long.

21.1 Lamps of the proper type, wattage, and voltage rating shall be delivered to the project in the original cartons and installed in the fixtures just prior to the completion of the project.

21.1.1 Incandescent Lamps shall be for 120-volt operation unless otherwise specified.

21.1.2 Fluorescent Lamps shall have standard cool-white color characteristics and shall be of a type that will not require starter switches. The 34- and 40-watt lamps shall be of the rapid-start type.

21.2 Fixtures shall conform to the following specifications and shall be as detailed on drawing No. 40-06-04, sheets Nos. 2, 16, 51, and 55; and 16-01, 02, 03, 04, 05, 06, 07, 08, 09, 10, 11, 12 drawing No. 40-06-04, sheets Nos. 2, 16, and 51, which accompany and form a part of this specification. Illustrations shown on these sheets are indicative of the general type desired and are not intended to restrict selection to fixtures of any particular manufacturer. Fixtures of similar designs and equivalent light-distribution and brightness characteristics, and of equal finish and quality will be acceptable if approved by the Contracting Officer.

21.2.1 Accessories such as straps, mounting plates, nipples, or brackets shall be provided for proper installation.

21.2.2 Recessed Fluorescent Fixtures. Fixtures shall be installed in suspended ceiling openings as provided under section: ACOUSTICAL TREATMENT and section: FURRING (METAL), LATHING, AND PLASTERING. These fixtures shall have adjustable fittings to permit alinement with ceiling panels. Fixtures installed in fire-resistive type of suspended ceiling construction shall be provided with fireproofing boxes having materials of the same fire rating as the ceiling panels, in conformance with the Building Materials Directory of Underwriters' Laboratories, Inc. Fixtures shall not be covered with thermal insulation and shall be adequately ventilated to the joist space above the finished ceiling.

21.3 Light Track. Four circuit power track shall be surface mounted as detailed on the drawings. Track shall provide 4 separate 20 amp grounded circuits in each section. Sections shall be formed from 1-3/4 inch wide x 1-3/4 inch deep extruded aluminum channel with .070 inch nominal wall thickness. Conductor strips shall be solid copper encased in rigid extruded poly-vinyl insulators. Connectors and end caps shall be molded polycarbonate with solid-brass contact fingers. Track, connectors and accessories shall be finished in satin white paint.

21.3.1 Track Fixtures hall be provided with four circuit adapter plug-in units to allow any fixture to be served by any of the 4 available circuits. Fixtures shall be as detailed on drawing No. 16-10. Finish shall be satin white paint. Each fixture shall be switchable by a 3-position switch in the adapter plug-in to be on the top circuit, on the bottom circuit or 'off'. The adapter plug-in shall be reversible in its position in the track to connect the fixture to either circuits No. 1 or 2, or in the reverse position, circuits No. 3 or 4.

22. EQUIPMENT CONNECTIONS. All wiring for the connection of motors and control equipment as indicated on the electrical drawings shall be furnished and installed under this section of the specifications. Except as otherwise specifically noted, automatic-control wiring, signaling, and protective devices are not included in this section of the specifications but shall be furnished and installed under other sections of the specifications. Control wiring not shown on the electrical drawings shall be furnished under other sections of the specifications.

22.1 Government-furnished Equipment Installed Under Other Sections of the Specifications. Wiring shall be extended to the equipment, and proper connections made thereto.

22.2 Flexible Connections of Short Length shall be provided for equipment subject to vibration or movement and for all motors. Liquid-tight flexible conduit shall be used in wet locations.

23. PAINTING AND FINISHING. Field-applied paint on exposed surfaces shall be provided under section: PAINTING, GENERAL.

24. TESTS. After the interior-wiring-system installation is completed, and at such time as the Contracting Officer may direct, the contractor shall conduct an operating test for approval. The equipment shall be demonstrated to operate in accordance with the requirements of this specification. The test shall be performed in the presence of the Contracting Officer or an authorized representative. The contractor shall furnish all instruments and personnel required for the tests, and the Government will furnish the necessary electric power. The contractor shall submit in writing to the Contracting Officer upon completion of the project the measured ground resistance of each ground rod, indicating the location of the rod and the resistance and the soil conditions at the time the measurements were made.

25. GUARANTEE. The following equipment to be furnished under this section of the specifications shall be guaranteed against defective materials, design, and workmanship for a period of one year from the date of acceptance, either for beneficial use or final acceptance, whichever is earlier.

Receptacles
Switches
Circuit breakers
Panelboards
Low-voltage metal-enclosed switchgear

Control centers
Lighting fixtures
Light tracks

Upon receipt of notice from the Government of failure of any part of the guarantee equipment during the guarantee period, new replacement parts shall be furnished and installed promptly at no cost to the Government.

* * * * *

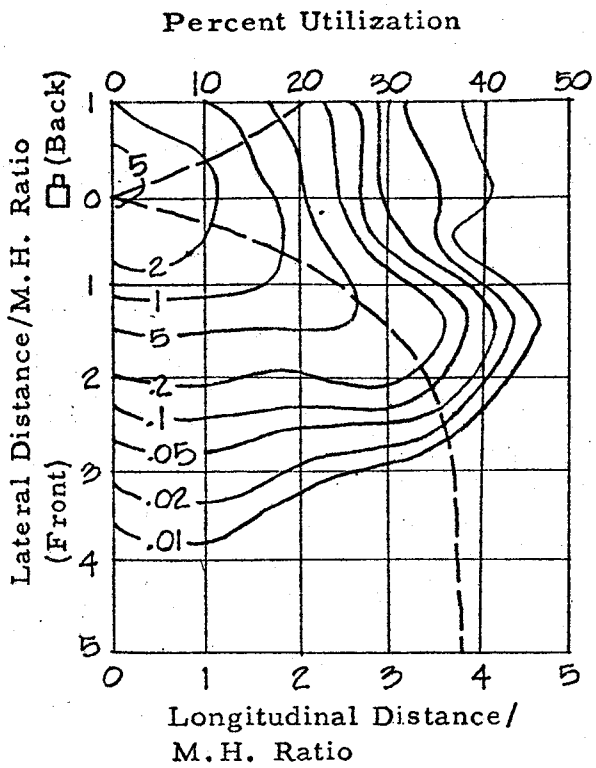

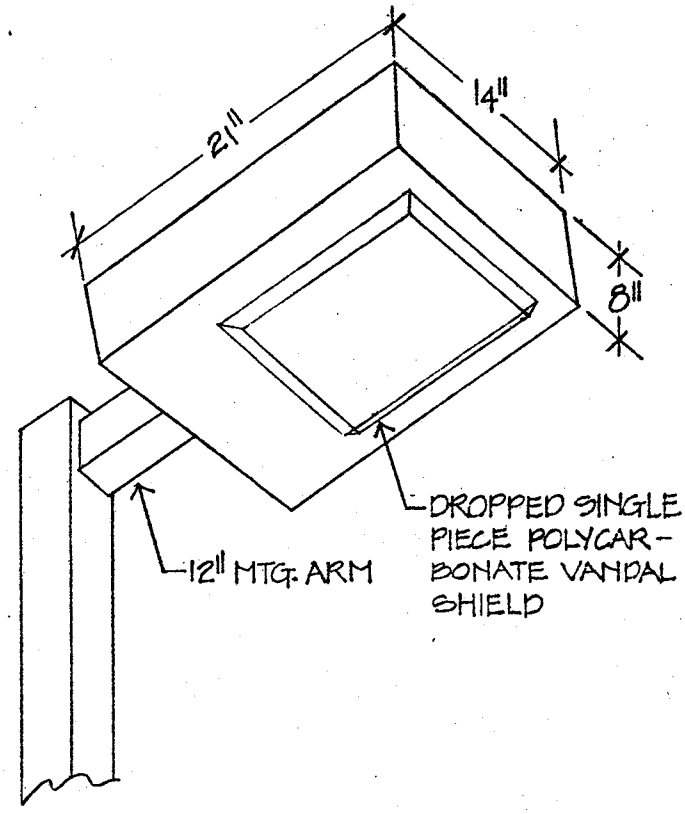

ISOFOOTCANDLE DIAGRAM
(Based on 20 Foot M.H.)
150W HPS, 16,000 LM Lamp
IES Type III, Medium, Cutoff

Arm mounted linear shaped luminaire with welded .063" aluminum sheet metal housing, integral ballast assembly compartment, flat tempered glass lens and dropped clear polycarbonate vandal shield, extruded aluminum mounting arm and leveling mechanism for $\pm 2\frac{1}{2}^{\circ}$ horizontal adjustment. Black baked acrylic enamel finish.

Polycarbonate vandal shield below glass lens shall be secured to lens door preventing passage of dirt and insects between vandal shield and glass lens and into lamp housing. Lens door shall be formed .080" aluminum, welded with full side to side structural bracing and hinged by two plated steel pins. Door shall be positively retained to housing with two stainless steel closure screws.

Integral ballast assembly shall be prewired to the lamp socket and terminal board. The entire ballast assembly shall be easily removable and replaceable through the use of quick disconnect plugs. The ballast shall operate the applicable lamp from a nominal power source as specified by the lamp manufacturer. The ballast shall reliably start and operate the lamp in ambient temperature from -30°F to +130°F. Ballast shall be of the magnetic regulator or auto-regulator type, 93% minimum power factor, with starting current lower than operating current.

Drawing No. 16-01

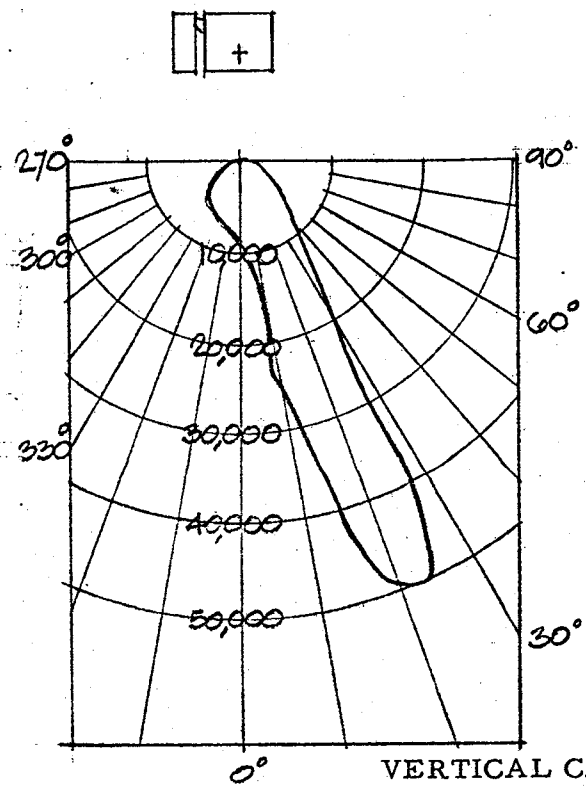

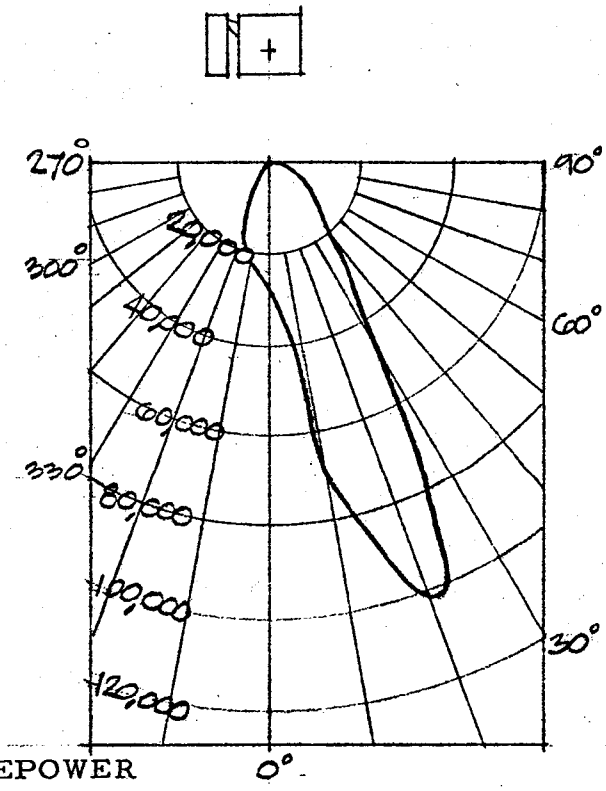

VERTICAL CANDLEPOWER

400W HPS, 47,000 LM Lamp
NEMA: 7 x 5

1000W HPS, 130,000 LM Lamp
NEMA: 6 x 5

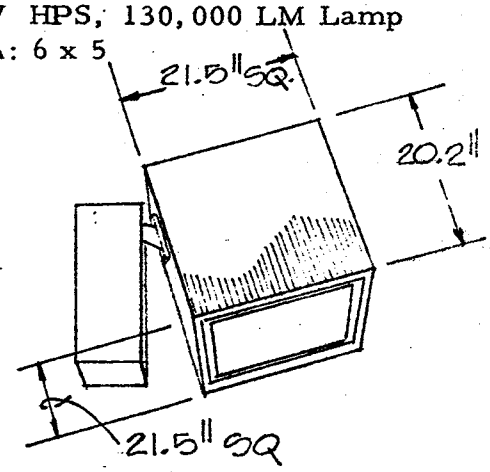

Luminaire construction: NEMA heavy gauge aluminum housing with galvanized steel stiffener for added structural support of ballast and mounting adapter, hinged and gasketed aluminum door frame, all corrosion resistant hardware, dark bronze baked enamel finish, heavy duty porcelain socket with lamp grips, integral ballast. UL listed "Suitable for Wet Locations".

Optical assembly shall be sealed and filtered and consist of: a faceted aluminum Alzak finished reflector to provide an asymetric beam spread as specified; a clear heat and impact resistant flat glass lens; an activated charcoal filter; an external aluminum square pole adapter capable of vertical adjustment, in 8° increments, up to 60°.

Integral ballast shall have all components mounted on a galvanized steel support. The ballast shall be prewired to the lamp socket and terminal board. The entire ballast assembly shall be easily removable and replaceable through the use of quick disconnect plugs. The ballast shall operate the applicable lamp from a nominal 480 Volt, 60 Hz power source within the limits specified by the lamp manufacturer. The ballast shall reliably start and operate the lamp in ambient temp. from -30°F to +130°F. Ballast shall be of the magnetic regulator or auto-regulator type, 93% min. power factor, with starting current lower than operating current.

Drawing No. 16-02

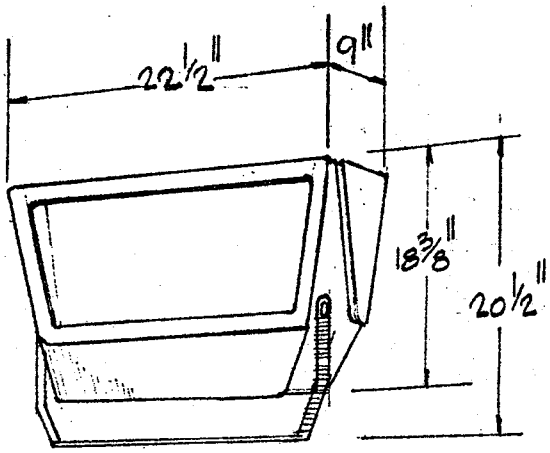

Floodlighting luminaire with die-cast aluminum housing, galvanized steel trunnion bracket, clear heat and impact resistant flat glass lens, all corrosion resistant hardware, and a heavy-duty porcelain socket with lamp grips.

Optical assembly shall be sealed and activated charcoal filtered. Reflector shall be parabolic Alzak aluminum finish to produce specified NEMA beam type.

Integral ballast assembly shall be prewired to the lamp socket and terminal board. The ballast shall operate the applicable lamp from a nominal power source as specified on the drawings within the limits specified by the lamp manufacturer. The ballast shall reliably start and operate the lamp in ambient temperature from -30°F to +130°F. Ballast shall be of the magnetic regulator or auto-regulator type, 93% minimum power factor, with starting current lower than operating current.

Drawing No. 16-03.1

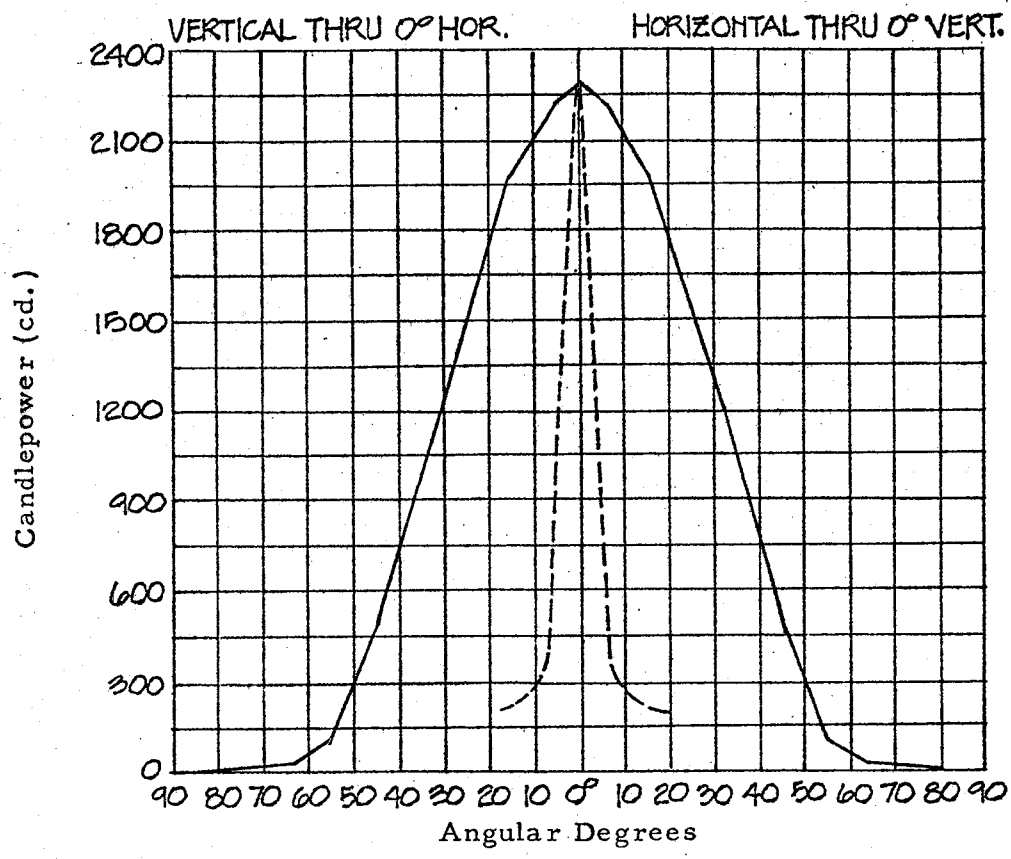

LUMINOUS INTENSITY (CANDELAS)

Vertical (dashed line) Horizontal (solid line)
Candelas per 1000 lamp lumens.
NEMA Type 6 x 2 Beam. Type "H".

Drawing No. 16-03.2

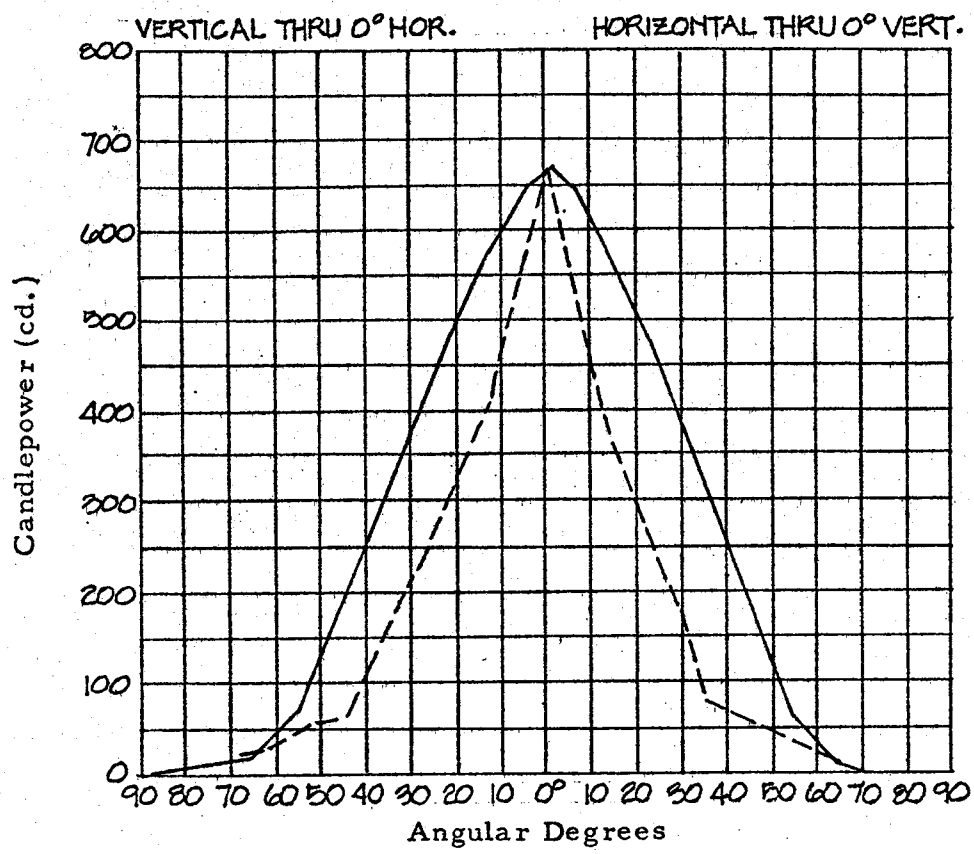

LUMINOUS INTENSITY (CANDELAS)

Vertical (dashed line) Horizontal (solid line)
Candelas per 1000 lamp lumens.
NEMA Type 6 x 5 Beam. Type "L".

Drawing No. 16-03.3

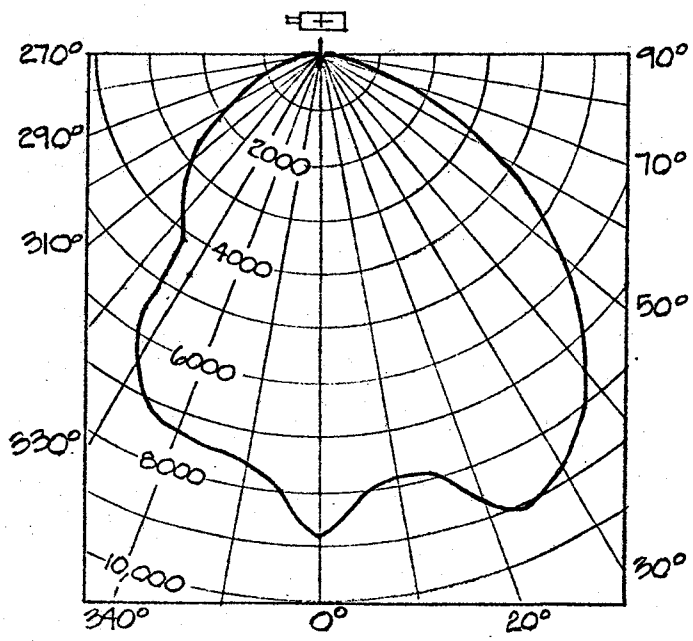

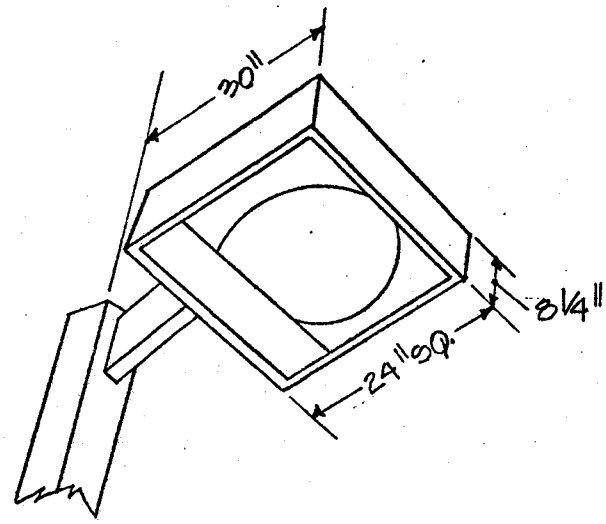

VERTICAL CANDLEPOWER DISTRIBUTION
400W HPS, ANSI/IES Type III, medium, cutoff

Luminaire housing shall be square formed from heavy gauge aluminum, water tight, sealed and gasketed. Finish shall be black thermoset enamel.

Optical assembly containing the Alzak aluminum reflector shall be enclosed by the housing and door assembly, sealed and filtered. A clear heat and impact resistant flat glass lens shall be protected by an external dropped clear polycarbonate vandal shield integrally mounted with the lens in the door assembly.

Integral ballast shall be a self-contained removable assembly supporting the ballast, capacitor, lamp socket and polarized, quick disconnect, power input plug. The assembly shall be removable without the use of tools. The ballast shall operate the applicable lamp as specified from a nominal 480 Volt, 60 Hz power source within the limits specified by the lamp manufacturer. The ballast shall reliably start and operate the lamp in ambient temperature from -30°F to +130°F. Ballast shall be of the magnetic regulator or auto-regulator type, 93% minimum power factor, with starting current lower than operating current.

Drawing No. 16-04

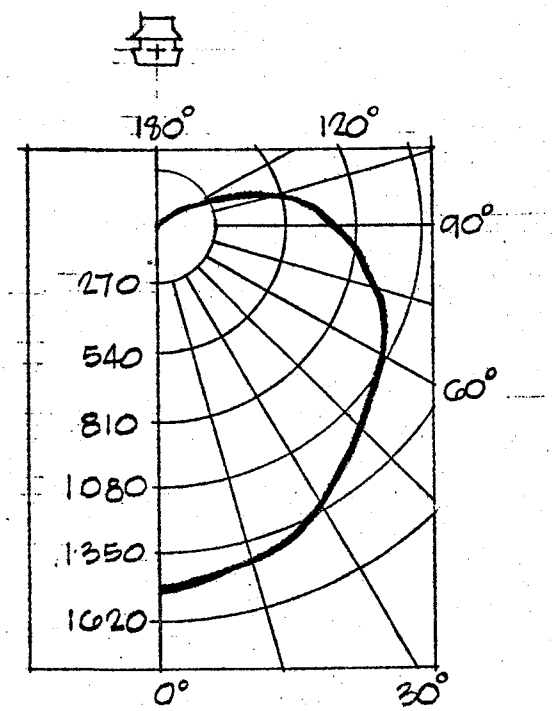

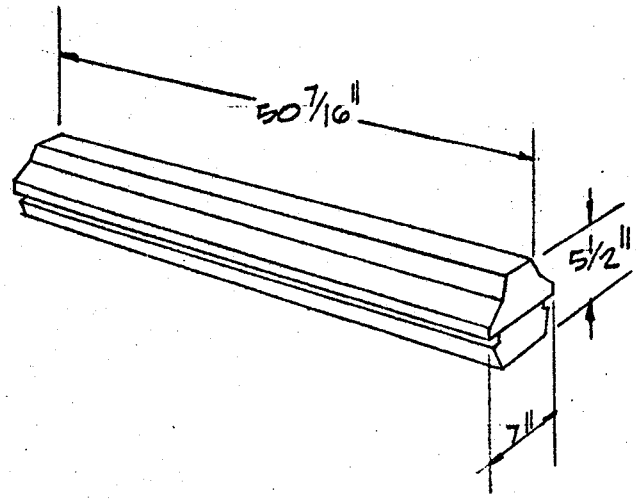

800 MA Lamps 2/60W 3750 LM Lamps

PERPENDICULAR CANDLEPOWER DISTRIBUTION

Suspended mounting fixture for individual or continuous row mounting with two 60-watt high output rapid start flourescent lamps as indicated on the contract drawings. Fixture housing shall be of die formed steel having a thickness of not less than .0359 inches nominal with plastic coated non-corrosive acrylic white finish. Seams shall be welded. A steel reflector, not less than .0239 inches nominal thickness, shall completely enclose all wiring and ballasts and shall provide a wireway for circuits through the fixture. The reflector shall be securely connected to the fixture housing, but shall be easily removed without the use of tools. The diffuser shall be one piece injection molded clear polycarbonate with pebbled texture and ultra violet resistant additives. The diffuser shall be securely fastened to the fisture housing with six stainless steel tamper proof latches. Entire fixture shall be U.L. listed "Enclosed and Gasketed - Suitable for Wet Locations".

Ballast shall be of the rapid start, high power factor, multi-lamp type, ETL-CBM certified, or certified as equal by a recognized independent testing laboratory. Ballast shall operate the applicable lamps from a nominal 277 Volt, 60 Hz power source within the limits specified by the lamp manufacturer. The ballast shall reliably start and operate the lamps in ambient temperatures from -20°F to +30°F. Conductors shall be not smaller than No. 18 Awg. and shall have a minimum temperature rating of 90°C. All electrical components shall be replacable without removing the housing from the ceiling support.

Drawing No. 16-05

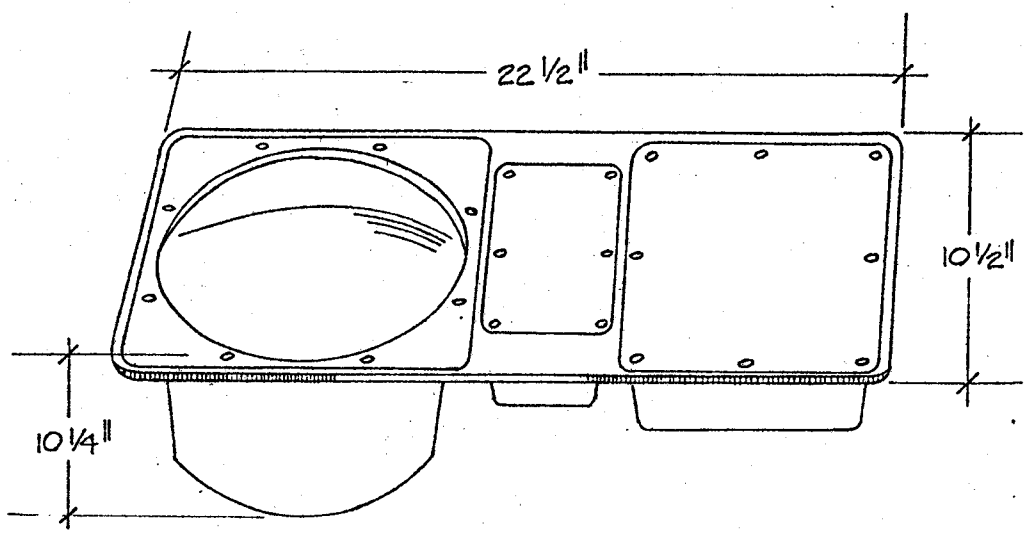

Luminaire housing shall be one-piece cast aluminum alloy 356. All compartments shall be separated by a double wall. Lens gasket shall be silicone, ballast compartment gasket, splice compartment gasket, and lens retainer cover gasket shall be neoprene. Wire seals shall be used to prevent wicking of water or condensation along the wires. The isolation chamber shall be filled with a flexible high temperature sealing compound for total sealing of the wiring system. Entire assembly shall be watertight.

Ballast for 75W mercury vapor lamp shall be autostabilized (CWA) high power factor, -20°F minimum starting temperature with ±10% voltage regulation from 120V nominal power source. All electrical components shall be factory prewired with 90°C wire to the splice compartment.

Lens shall be high impact resistant glass.

Drawing No. 16-06

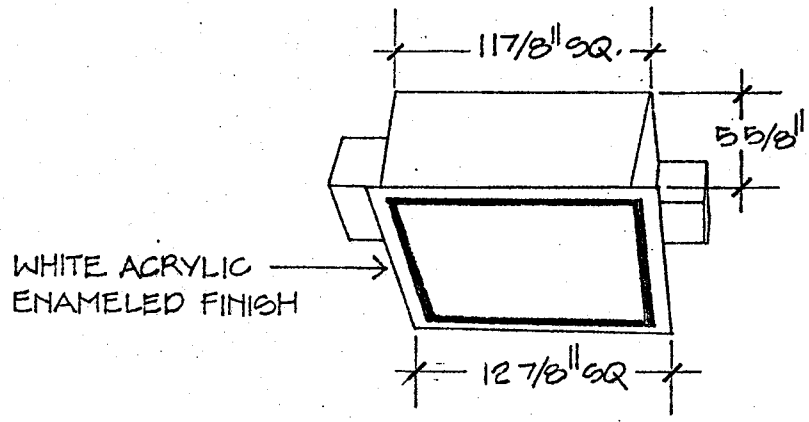

Square recessed luminaire, 0.050" heavy gauge aluminum housing, acrylic 1000 hour salt spray resistant finish; lens door of nickel stainless steel. Door shall have key operated nickel stainless screws; tamper-proof. Reflector of glass-surfaced aluminum. Lens of high strength acrylic plastic prismatic with polycarbonate overlay for vandal resistant diffuser.

Integral ballast prewired to glazed porcelain lamp socket and outlet box. Class "H" high power factor 90°C transformer. Heavy duty buffered 90°C capacitor (internally mounted). Ballast shall operate the applicable lamp from a nominal power source as specified on the drawings within the limits specified by the lamp manufacturer. Ballast shall be of the regulator or auto-regulator type, 98% minimum power factor, with starting current less than operating current.

Where recessed in poured concrete, installation shall use a manufacture's pour form to protect and align the luminaire. Outdoor installation shall include a lens gasket to prevent the passage of dirt and insects into the lamp housing. Fixture shall be U.L. listed for wet locations.

Drawing No. 16-07

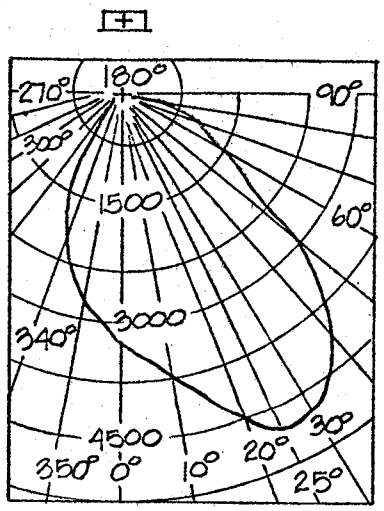

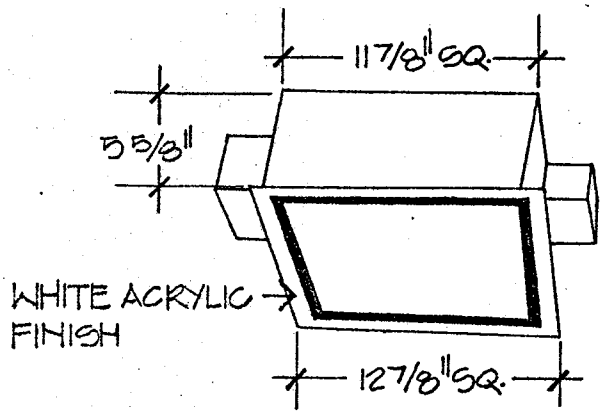

CANDLEPOWER DISTRIBUTION
100 W HPS, 9,500 LM Lamp
Multiply Cp values x .61 for 70W HPS, 5,800 LM Lamp

Square recessed luminaire, 0.050" heavy gauge aluminum housing, acrylic 1000 hour salt spray resistant finish; rust-proof. Complete fixture serviced thru hinged door. Specular aluminum glass surface finish reflector full-lens size. 30° unidirectional wall washer glass lens, shock resistant. Gasket between glass and door and between door frame and housing. Pull-latch door retainer.

Integral ballast assembly prewired to glazed porcelain lamp socket and outlet box. Class "H" high power factor 90°C transformer. Heavy duty buffered 90°C capacitor. Ballast shall operate the applicable lamp from a nominal power source as specified on the drawings within the limits specified by the lamp manufacturer. Ballast shall be of the regulator or auto-regulator type, 98% minimum power factor, with starting current lower than operating current.

Drawing No. 16-08

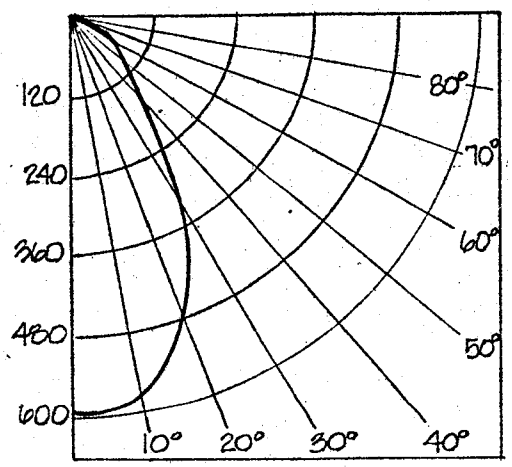

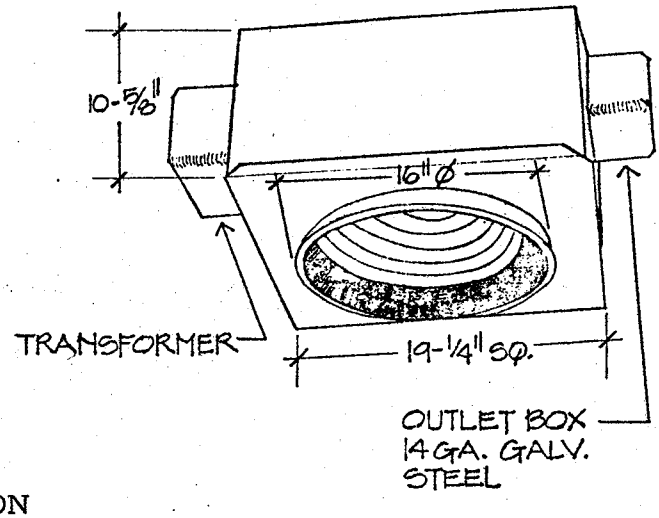

CANDLEPOWER DISTRIBUTION
Candelas per 1000 Lamp Lumens
70W HPS, 5,800 LM Lamp

Round recessed luminaire, 0.050" heavy gauge aluminum housing, acrylic 1000 hour salt spray resistant finish; rustproof. Complete fixture serviced thru removable lens flange and reflector. Aluminum lens flange with 1" matte black regress to lens from white acrylic enameled exposure. Concentric glass lens. Traction spring retention of lens flange.

Integral ballast prewired to glazed porcelain lamp socket and outlet box. Class "H" high power factor 90°C transformer. Heavy duty buffered 90°C capacitor (internally mounted). Ballast shall operate the applicable lamp from a nominal power source as specified on the drawings within the limits specified by the lamp manufacturer. Ballast shall be of the regulator or auto-regulator type, 98% minimum power factor, with starting current less than operating current.

Drawing No. 16-09

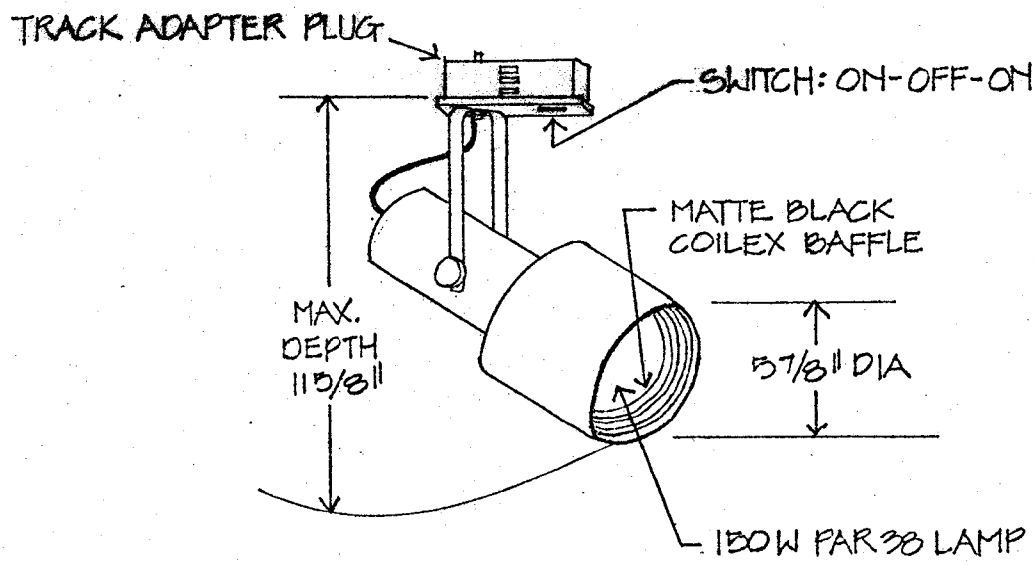

Track light luminaire, indoor, bidirectional swivel mounting. Aluminum housing with matte black coilex baffle shield.

Lampholder and housing shall accomodate 150 or 300W R40 or 150W PAR 38 or smaller lamps. Four circuit adapter plug with three-position switch for individual fixture control. Fixture shall be wired with minimum No. 16 AWG conductors having a minimum temperature rating of 150°C.

Drawing No. 116-10

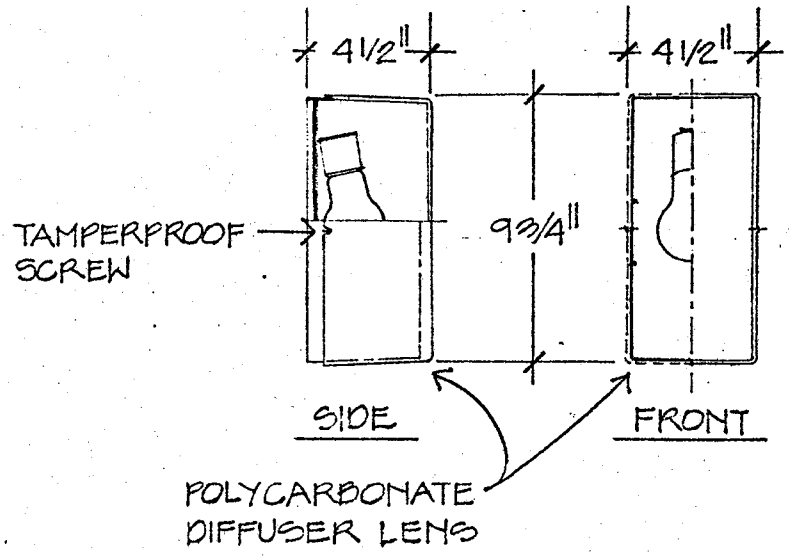

Fixture housing and back plate of diecast aluminum, matte black finish.

Single piece diffuser of one piece polycarbonate, injection molded plastic. Tamper-proof stainless steel screws.

Conductors shall be not smaller than #18Awg. and shall have a minimum temperature rating of 90°C.

Lamp shall be 100W, 120V maximum incandescent, A-21.

Drawing No. 16-11

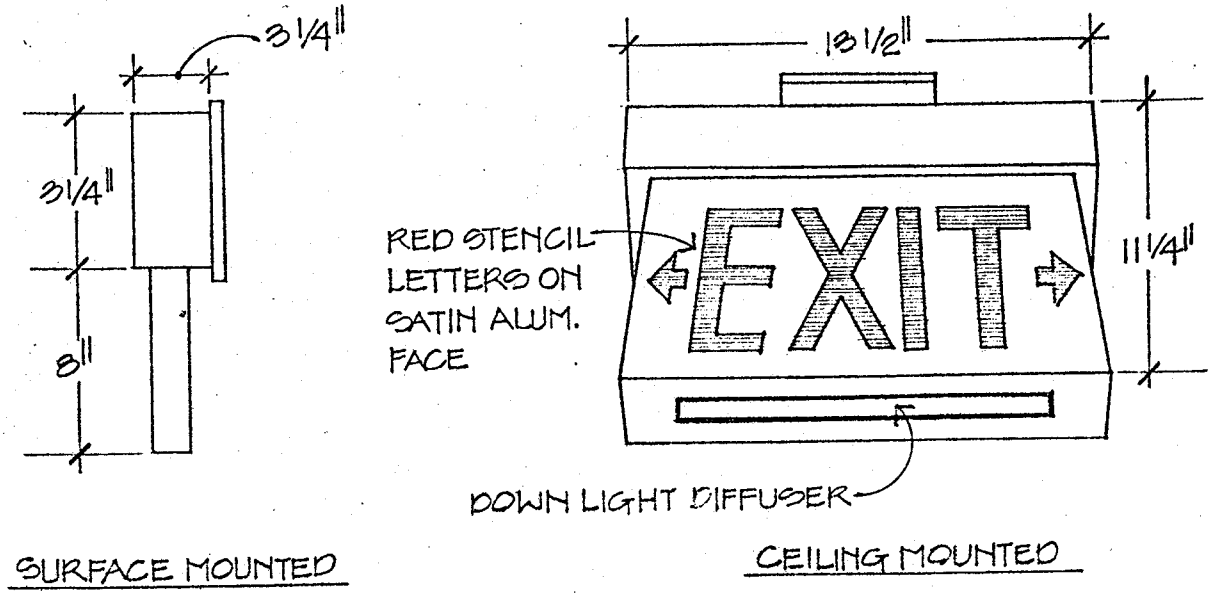

Housing of aluminum with satin, scratch-resistant, anodized, architectural grade finish. Equipped with a supervisory monitor light which indicates the integrity of the entire system including a sealed nickel cadmium battery with fully automatic solid state charger, DC bulbs and circuitry. Failure of any component in the circuit will cause the monitor light to extinguish.

Satin aluminum face with 6" high x $\frac{3}{4}$" stroke stencel letters, red polymer diffuser and universal arrows.

Two T6$\frac{1}{2}$ - 20W ceramic frost incandescent long-life lamps for AC illumination. Two screw base DC Xenon high-efficiency 3.6V G6 lamps for emergency illumination. Emergency illumination in excess of 1$\frac{1}{2}$ hours on self-contained battery pack shall be automatically provided.

Battery pack shall be maintenance free and provide a life expectancy of 12 years minimum. Conductors shall be not smaller than #18Awg. and shall have a minimum temperature rating of 90°C.

Drawing No. 16-12

SECTION 16B

ELECTRICAL-DISTRIBUTION AND PARK-LIGHTING SYSTEM; UNDERGROUND

Index

1. Work Specified Elsewhere
2. Applicable Publications
3. General
4. Materials and Equipment
5. List of Materials and Equipment
6. Shop Drawings
7. Workmanship
8. Duct System
9. Installation of Cable
10. Secondary Distribution Centers
11. Integral Transformer-Load Centers
12. Secondary Feeder and Branch Circuit Cable System
13. Secondary Junction Boxes
14. Park Lighting System
15. Park Lighting Control
16. Sports Lighting Control
17. Walkway and Bikeway Poles
18. Sports and Parking Lighting Poles
19. Baseball Lighting Poles
20. Luminaires
21. Step and Sign Lighting
22. Luminaire Wiring
23. Time Clocks
24. Photoelectric Controls
25. Park Lighting Control Console
26. Grounding
27. Tests
28. Guarantee
29. Payment

1. WORK SPECIFIED ELSEWHERE.

1.1 Service-Entrance Conduits stubbed out 5 feet from buildings are specified in section: ELECTRICAL WORK, INTERIOR.

2. APPLICABLE PUBLICATIONS. The following publications of the issues listed below, but referred to thereafter by basic designation only, form a part of this specification to the extent indicated by the references thereto.

2.1 Federal Specifications.

J-C-30A & Am-1	Cable and Wire, Electrical (Power, Fixed Installation)
W-C-571b & Int. Am-1 (GSA-FSS)	Conduit and Fittings, Nonmetal, Rigid; (Asbestos-Cement or Fire-Clay Cement), (For Electrical Purposes)
W-C-586B & Am-1	Conduit Outlet Boxes, Bodies and Entrance Caps, Electrical: Cast Metal—for Shore Use
W-F-406b & Int. Am-1 (GSA-FSS)	Fittings for Cable, Power, Electrical and Conduit, Metal, Flexible
W-F-408C & Am-1	Fittings for Conduit, Metal, Rigid, (Thick-Wall and Thin-Wall (EMT) Type)
W-F-791E/GEN & Am-1	Fuse, Plug (General Specification)
W-L-00101G (GSA-FSS) & Am-1	Lamp, Incandescent, (General Specification)
W-P-115a & Am-3	Panel, Power Distribution
W-S-610C & AM-1	Splice Conductor
W-S-865c & Int. Am-2 (GSA-FSS)	Switch, Box, (Enclosed), Surface-Mounted
W-T-631c & Am-2	Transformer, Power, Distribution

2.1 Federal Specifications. (Continued)

FF-P-101E & Am-1	Padlocks
QQ-I-652C	Iron Castings, Gray
QQ-S-681F	Steel Castings
SS-A-281b & Am-1	Aggregate; (For) Portland-Cement-Concrete
WW-C-581E	Conduit, Metal, Rigid, and Intermediate; and Coupling, Elbow, and Nipple, Electrical Conduit: Steel, Zinc Coated

2.2 Deleted.

2.3 American National Standards Institute, Inc. (ANSI) Standards.

C57.12.00-1973	General Requirements for Distribution, Power, and Regulating Transformers
C57.12.90-1973 & C57.12.90a-1974	Test Code for Distribution, Power, and Regulating Transformers

2.4 American Society for Testing and Materials (ASTM) Standards.

A 123-73	Zinc Hot-Galvanized Coatings on Products Fabricated from Rolled, Pressed, and Forged Steel Shapes, Plates, Bars, and Strip
A 153-73	Zinc Coating Hot-Dip on Iron and Steel Hardware
C 150-77	Portland Cement
D 574-74	Ozone-Resisting Insulation for Wire and Cable
D 752-73	Heavy-Duty Black Polychloroprene Jacket for Wire and Cable
D 1352-74	Ozone-Resisting Butyl Rubber Insulation for Wire and Cable
D 1679-74	Synthetic Rubber Heat- and Moisture-Resisting Insulation for Wire and Cable, 75 degrees C Operation

2.5 Institute of Electrical and Electronics Engineers (IEEE) Standards.

National Electrical Safety Code (ANSI C2) (Feb 1977; Correction sheet, Feb 1977).

No. 48-1975	Standard Test Procedures and Requirements for High-Voltage Alternating-Current Cable Terminations

2.6 Insulated Power Cable Engineers Association (IPCEA) Standards Publications.

No. S-19-81	Rubber-Insulated Wire and Cable for the Transmission and Distribution of Electrical Energy (Fifth Edition, July 1969, Rev. Mar. 1971, Feb. 1972, Sep. 1973, Oct. 1974, Jun. 1976, Sep. 1977)

2.6 Insulated Power Cable Engineers Association (IPCEA) Standards Publications. (Continued)

No. S-61-402	Thermoplastic-Insulated Wire and Cable for the Transmission and Distribution of Electrical Energy (July 1973)
No. S-66-524	Cross-Linked-Thermosetting-Polyethylene-Insulated Wire and Cable for the Transmission and Distribution of Electric Energy (May 1971, Rev. March 1972, Oct. 1973, Sep. 1974, June, Oct. 1976)

2.7 National Electrical Manufacturers Association (NEMA) Standards Publications.

No. FA 1-1973	Outdoor Floodlighting Equipment
No. OD 1-1977	Selection of Filament Lamps Used in Roadway Lighting Equipment
No. TC 6-1974 Rev. thru Mar. 19, 1975	Plastic Utilities Duct for Underground Installation
No. TR 1-1974 Rev. Aug 1975	Transformers, Regulators and Reactors

2.8 National Fire Protection Association (NFPA) Publication.

No. 70-1975	National Electrical Code

2.9 Underwriters Laboratories, Inc. (UL) Publication.

UL 854	Service-Entrance Cables (June 18, 1975; Rev. thru Sep 24, 1976)

3. GENERAL. The contract drawings indicate the extent and general arrangement of the underground electrical distribution (and) (street lighting) system(s).

3.1 Capacities of all equipment and material shall be not less than those indicated.

3.2 Codes. The installation shall comply with the applicable requirements and recommendations of the National Electrical Code and the National Electrical Safety Code.

3.3 Conformance With Agency Requirements. Where materials or equipment are specified to conform to the standards of the Underwriters' Laboratories, Inc., or to be constructed or tested, or both, in accordance with the standards of the National Electrical Manufacturers Association or the American National Standards Institute, Inc., the Contractor shall submit proof that the items furnished under this section of the specifications conform to such requirements. The label of, or listing by the Underwriters' Laboratories, Inc., will be acceptable as sufficient evidence that the items conform to Underwriters' Laboratories, Inc., requirements. A certification or published catalog specification data statement to the effect that the item is in accordance with the referenced NEMA standard by a company listed as a member company of NEMA for the section whose standards cover the item under consideration, will be acceptable as sufficient evidence that the item conforms to the requirements of the National Electrical Manufacturers Association. In lieu of such stamp, certification, label or listing, the Contractor may submit a written certificate from any nationally recognized testing agency adequately equipped and competent to perform such services, stating that the items have been tested and that the units conform to the requirements listed hereinbefore, including methods of testing of the specified agencies. Conformance with the agency requirements does not relieve the item from complying with any other requirements of the specifications.

3.4 Namplates. Each major component of equipment shall have as a minimum the manufacturer's name, address, and catalog number, model, style, or type on a plate securely and conspicuously attached to the item of equipment. Nameplates for electrical apparatus shall conform to the referenced standards.

3.5 Prevention of Corrosion. All metallic materials shall be protected against corrosion. Exposed metallic parts of outdoor apparatus shall be given a rust-inhibiting treatment and standard finish by the manufacturer. Aluminum shall not be used in contact with the earth, and where connected to dissimilar metal shall be protected by approved fittings and treatment. All parts such as boxes, bodies, fittings, guards, and miscellaneous parts made of ferrous metals but not of corrosion-resistant steel, shall be zinc-coated in accordance with ASTM A 123 or A 153, except where other equivalent protective treatment is specifically approved in writing by the Contracting Officer. Steel conduits installed underground or under slabs on grade shall be coated with an approved asphaltic paint, plastic

coating or shall be wrapped with a single layer of a pressure-sensitive plastic tape, half-lapped. Where pressure-sensitive plastic tape is used, the conduit shall be coated with a primer recommended by the tape manufacturer before applying the tape.

3.6 Spare-Parts Data. As soon as practicable after approval of materials and equipment and, if possible, not later than 4 months prior to the data of beneficial use, the Contractor shall furnish spare-parts data for each different item of equipment listed. The data shall include a complete list of parts and supplies, with current unit prices and source of supply; a list of parts and supplies that are either normally furnished at no extra cost with the purchase of the equipment, or specified hereinafter to be furnished as part of the contract; and a list of additional items recommended by the manufacturer to assure efficient operation for a period of 120 days at the particular installation. The foregoing shall not relieve the Contractor of any responsibilities under the guarantee specified hereinafter.

3.7 Standard Products. Materials and equipment shall be essentially the standard products of a manufacturer regularly engaged in the manufacture of the product, shall meet the requirements of the specification, and essentially duplicate materials and equipment that have been in statisfactory use at least 2 years.

3.8 Verification of Dimensions. The Contractor shall be specifically responsible for the coordination and proper relation of his work to the site and to the work of all trades. The Contractor shall visit the premises and thoroughly familiarize himself with all details of the work and working conditions, shall verify all dimensions in the field, and advise the Contracting Officer of any discrepancy before performing any work.

4. MATERIALS AND EQUIPMENT shall conform to the respective specifications and other requirements specified herein.

4.1 Rubber Insulated, Polychloroprene Jacketed Cable.

4.1.1 For Cable Having a Voltage Rating of 2,000 Volts or Less. ASTM Specification D 1679 and Specification D 752 for insulation and jacket, respectively, and IPCEA Pub. No. S-19-81 for the construction, and for conductor gages.

4.1.2 Underground-Service-Entrance Cable. Underwriters' Laboratories, Inc., Standard for Service-Entrance Cables, type USE, rated 75 degrees centigrade minimum.

4.1.3 Cross-Linked Polyethylene Insulated, Polyvinyl Jacketed or Polyethylene Jacketed Cable. IPCEA Specification S-61-402, except that the cross-linked polyethylene insulation shall conform to IPCEA Specification S-66-524.

4.1.4 Cross-Linked Polyethylene Insulation for Cables shall be an extraned single wall of heat-stabilized and light-stabilized, filled or unfilled, chemically cross-linked polyethylene conforming to IPCEA Specification S-66-524.

4.2 Castings.

4.2.1 Cast Iron. Federal Specification QQ-I-652, class 30.

4.2.2 Cast Steel. Federal Specification QQ-S-681.

4.3 Conduits.

4.3.1 Asbestos-Cement Conduit and Fittings. Federal Specification W-C-571b. In lieu of the asbestos-cement coupling specified, a fitted plastic or other tough nonmetallic fitted coupling providing a watertight joint may be used.

4.3.2 Precast-Concrete Conduit shall be single bore for electric power circuits, and shall be made of portland cement, sand, gravel, and water using a concrete mix essentially of 1 part cement, 2 parts sand, and 3 parts gravel in the manufacturing process. Reinforcing wire or rod may be used to produce adequate strength. No hardening additives, admixtures, or curing agents shall be used in the manufacture of the conduit. One end of each conduit section shall be integrally cast with a tapered tenon and the other end integrally cast with a tapered socket to provide adequate coupling and alinement of section, or each section shall have a bell end and a plain end to permit joining in sewer-tile fashion. When required, both ends of the conduit shall be furnished with identical tkype of coupling connections. The conduit shall be air- and/or moisture-cured as required to produce a product that will not soften, swell, peel, deform, collapse, or disintegrate on exposure to heat, moisture, frost, steam, or chemical attack, shall be free from caustic alkalies, acids and organic compounds, and shall not corrode or damage the cable sheaths. Fittings, accessories, and coupling or jointing materials shall be types recommended by the conduit manufacturer, especially produced for use with precast-concrete conduit, and shall be made of the same material as the conduit, of cast iron, or of rubber, mastic compound, or other approved nometallic material. The conduit shall be free from cracks, rough, or broken ends with the inner surface smooth and free from burs, blisters, loose sand, cement, and concrete. The conduit shall have a low coefficient of friction for easy pulling in of cables with no interior defects or

irregularities. The precast-concrete conduit shall be similar to type II in accordance with Federal Specification W-C-571. When samples, inspected, and tested as required therein, the precast-concrete conduit shall meet the performance and test requirements of Federal Specification W-C-571 for the following properties.

a. Absorption

b. Alkalinity

c. Bore

d. Crushing strength and flexural strength for type II conduit. In addition to the preceding tests, a slurry or its equivalent shall be made from finely divided material of the representative specimen, and the pH value of the precast-concrete conduit shall be determined. The pH value shall not exceed 11.0 when measured in accordance with the standard-type glass electrode or potentiometer test method.

4.3.3 Plastic Conduit shall be single bore, and shall be styrene rubber conduit conforming to NEMA TC 1 or either acrylonitrile-butadiene-styrene or polyvinyl-chloride conduit conforming to NEMA TC 6. Conduit fittings shall conform to the applicable NEMA standard, except that where NEMA standards for conduit fittings do not exist for the type of plastic installed, fittings shall be as recommended by the conduit manufacturer. Conduit and fittings shall be free, within commercial tolerances, of objectionable lines, striations, bubbles, welds, and other manufacturing defects that would impair the service of the conduit. The bore of the conduit shall be straight and circular in cross section with smooth interior surfaces free from obstructions and rough and flaky areas. The conduit and fittings shall be free from all substances that injuriously affect any wire or cable covering such as is used on rubber-covered wire, polychloroprene-sheathed cable, weatherproof wire, and lead- or lead-alloy-covered cable. The conduit and fittings shall be corrosion-resistant and not adversely affected by chewing insects, gnawing rodents, acids, alkalies, salts, bacteria, and other organic matter that would normally be encountered in the ground. The conduit length for each size shall be the length that is standard with the manufacturer with a permissible tolerance of 1/4 inch per 10-foot length. Bends, elbows, and other fittings shall be capable of freely passing a ball that is 1/4 inch less in diameter than the nominal bore of the conduit. Fittings shall be of a type especially made for use with plastic conduit for electrical service. Conduit and fittings shall be capable of being joined, by means of a solvent welding cement, so as to provide a watertight and rootproof joint. Type I, light-wall conduit, for use with concrete encasement, and type II, heavy-wall conduit, for use with concrete encasement shall have dimensions for the corresponding size in accordance with the applicable NEMA standard. Sections cut from the conduit shall be calipered for wall thickness.

4.4 Conduit, Steel. Federal Specification WW-C-581, rigid metal steel.

4.5 Connectors. Federal Specification W-S-610; and electrical power connectors, NEMA Pub. No. CC 1.

4.6 Fittings, cable and conduit. Federal Specification W-F-406 or W-F-408. Insulating material in bushings shall be of the thermosetting type and shall not support combustion.

4.7 Floodlights, NEMA Pub. No. FA 1.

4.8 Fuses.

4.8.1 Cartridge and Plug Fuses. Federal Specification W-F-791.

4.9 Lamps, Incandescent. Federal Specification W-L-101.

4.10 Mortar shall be composed of the following materials.

4.10.1 Aggregate. Federal Specification SS-A-281.

4.10.2 Portland Cement. ASTM Specification C 150.

4.10.3 Water shall be clean, fresh, and free from injurious amounts of mineral and organic substances.

4.10.4 Mixture shall be in the proportions of one part portland cement to one part sand with sufficient water added to produce a pliable and workable mortar.

4.11 Outlets, metal, for conduit. Federal Specification W-C-586.

4.12 Padlocks. Federal Specification FF-P-101.

4.13 Paint. As specified in section: PAINTING, GENERAL.

4.14 Panelboards. Federal Specification W-P-115, type and class as indicated. Panelboards installed exposed to the weather shall be raintight except as otherwise indicated.

4.15 Switches, surface-mounted, enclosed, safety. Federal Specification W-S-865, type NDS. Enclosure shall be Box 1 general purpose, except that switches exposed to the weather shall be Box 3R-rain-tight unless otherwise indicated.

4.16 Switchgear.

4.16.1 Switchgear Assemblies. NEMA Standard ICS-1970, Part 2-322.

4.17 Transformers. NEMA Standard ST 1-4.

5. LIST OF MATERIALS AND EQUIPMENT. Within days after notice to proceed, and before starting installation of any materials or equipment, the Contractor shall submit to the Contracting Officer for approval a complete list, in triplicate, of materials and equipment to be incorporated in the work. This list shall include manufacturer's style or catalog numbers. Cuts or other descriptive data shall be furnished when required by the Contracting Officer. No consideration will be given to partial lists submitted from time to time. Approval of materials will be based on manufacturer's published data, approval of materials and equipment will be tentative subject to submission of complete shop drawings indicating compliance with the contract documents.

6. SHOP DRAWINGS. After receiving tentative approval of the equipment on the material lists and before installation of any of these items, the Contractor shall submit complete shop drawings and such other descriptive data as the Contracting Officer may require to demonstrate compliance with the contract documents. Shop drawings shall be submitted for the following items and such other items as the Contracting Officer may direct:

a. Integral transformer load centers.

b. Secondary distribution centers.

c. Transformers, 200 Kva and larger.

If departures from the contract drawings are deemed necessary by the Contractor, details of such departures, including changes in related portions of the project and the reasons therefor, shall be submitted with the shop drawings. Approved departures shall be made at no additional cost to the Government.

7. WORKMANSHIP.

7.1 General. All materials and equipment shall be installed in accordance with the recommendations of the manufacturer as approved by the Contracting Officer to conform with the contract documents. The installation shall be accomplished by workmen skilled in this type of work.

8. DUCT SYSTEM.

8.1 General. The duct system shall consist of single round-bore-conduit for the electrical-distribution and street-lighting system, and single or multiple duct for the communications systems. The number and size of the duct shall be as indicated. Duct lines shall be laid to a minimum grade of 4 inches per 100 feet. Grade may be from one pullbox to the next or both ways from a high point between pullboxes, depending on the contour of the finished grade. Duct lines shall be installed so that the duct in encased duct lines is not less than 24 inches below finished grade or finished paving at any point. Changes in direction of runs exceeding a total of 10 degrees, either vertical or horizontal, shall be accomplished by long seep bends having a minimum radius of curvature of 25 feet, except that manufactured bends may be used at the ends of the run. The long sweep bends may be made up of one or more curved or straight sections and/or combinations thereof. Manufactured bends shall have a minimum radius of 18 inches for use with ducts of less than 3 inches in diameter and a minimum radius of 36 inches for ducts of 3 inches in diameter and larger. Conduits shall terminate in end bells where duct lines enter pullboxes. Conduit shall be thoroughly cleaned before using or laying. During construction and after the duct line is completed, the ends of the conduits shall be plugged to prevent water washing mud into the conduits or pullboxes. Particular care shall be taken to keep the conduits clean of concrete, dirt, and any other substance during the course of construction. Where it is necessary to cut a tapered end on a piece of conduit at the site, the cut shall be made with a tool or lathe designed to cut a taper to match the taper of the particular conduit being used. After the duct line has been completed, a standard flexible mandrel not less than 12 inches long, having a diameter approximately 1/4 inch less than the inside diameter of the conduit, shall be pulled through each conduit to make certain that no particles of earth, sand, or gravel have been left in the line. Pneumatic rodding may be used to draw in the lead wire. Conduits shall be stored to avoid warping or deterioration. Plastic conduit shall be stored on a flat surface and protected from the direct rays of the sun. Conduit joints in concrete encasement may be placed side by side horizontally but shall be staggered at least 6 inches vertically.

8.2 Materials.

8.2.1 Duct Banks for Secondary Electrical Distribtuion System Conductors and Single Conduits for Secondary Electrical Distribution System and Telephone System Conductors shall be of type I conduits with concrete encasement or type II conduits without concrete encasement for telephone system only as indicated. Type I

conduits shall consist of asbestos-cement or plastic. Type II conduits shall consist of asbestos-cement or plastic. Multiple precast-concrete conduit or type I plastic conduits with concrete encasement at the option of the Contractor may be used for secondary electrical distribution system. Type II duct banks shall be concrete encased. The type of conduit shall not be mixed on any project. Cables for the telephone and primary electrical distribution systems will be installed by others.

8.3 Installation of Duct Banks.

8.3.1 Duct Banks Comprising Type I or Type II Single Conduits.

8.3.1.1 General. Each single conduit of the duct bank shall be completely encased in concrete as indicated, except that a 3/8-inch layer of portland cement mortar may be used in lieu of concrete between flat horizontal surfaces of clay and precast-concrete conduit, at the option of the Contractor. The thickness of concrete encasement indicated is the minimum thickness, and may be increased to fit the actual shape of the trench. Separators or spacing blocks shall be made of steel, concrete, plastic, or a combination of these materials placed on not greater than 4-foot centers. Ducts shall be securely anchored to prevent movement during the placement of concrete.

8.3.1.2 Type I or Type II Single Conduits installed for primary distribution and secondary distribution cables shall be completely encased in concrete. The thickness of concrete shall be not less than 3 inches on the sides, bottom, and top of single conduits.

8.3.2 Duct Banks Comprising Multiple Conduits. Encasement is required for all duct banks. At least 3 inches of concrete shall be provided at sides, bottom and top of duct banks. Width of concrete shall be not less than overall outside width of conduits plus 3 inches on each side.

8.4 Installation of Couplings.

8.4.1 General. Joints in all types of conduit shall be made up in accordance with the manufacturer's recommendations for the particular conduit and coupling selected and as approved by the Contracting Officer. In the absence of specific recommendations, the various types of conduit joint couplings shall be made watertight by the following methods as appropriate.

8.4.1.1 Asbestos Cement, and Precast Concrete. The tapered ends or joints of asbestos cement, and precast-concrete conduit, except where approved plastic couplings are used, shall be swabbed with bituminous or joint-sealing compound before the coupling is applied to insure a watertight joint. Plastic or nonmetallic coupling shall be tightly driven onto the conduit. Due to the brittleness of polystyrene couplings at low temperatures, such couplings shall not be installed when temperatures are below 0 degrees F, and shall be warmed in hot water, or by another approved method when installed in temperatures below 32 degrees F.

8.4.1.2 Plastic Conduit Joints shall be made up by brushing a plastic solvent cement on the inside of the plastic coupling fitting and on the outside of the conduit ends. The conduit and fitting shall then be slipped together, until seated, with a slight twist to set the joint tightly, and the conduit then rotated one-half turn to distribute the cement evenly. Excess cement built up on the inside surface of the conduit shall then be removed.

8.5 Duct-Bank Markers shall be located at the ends of all duct banks except at pullboxes, at approximately every 200 feet along the duct run, and at each change in direction of the duct run. Markers shall be placed approximately 2 feet to the right of the duct bank when facing the longitudinal axis of the run and in the direction of the electrical load. Markers shall be made of class B concrete, 6-inch square or round section by 2 feet long. The top edges of the marker shall have a 1/2-inch chamfer all around. The letter "D" with two arrows shall be impressed or cast on top of the marker. One arrow shall be located below the letter and shall point toward the ducts. The second arrow shall be located adjacent to the letter and shall point in a direction parallel to the ducts. The letter and the arrow adjacent to it shall each be approximately 3 inches long. The arrow under the letter shall be approximately 2 inches long. The letter and arrows shall be V shaped and shall have a width of stroke at least 1/4 inch at the top, and epth of 1/4 inch. The top of the duct markers shall be flush in paved areas and in unpaved areas. Where the duct bank changes in direction, the arrow located adjacent to the letter shall be cast or impressed with an angle in the arrow approximately the same as the angular change of the duct bank.

8.6 Concrete shall be plain, class B, or 3,000 p.s.i. at 28 days, except where reinforced concrete is specified herein or indicated on the drawings. Duct lines shall be of monolithic construction. Where a connection is made to an existing duct line, the concrete encasement shall be well bonded or doweled to the existing encasement.

9. INSTALLATION OF CABLE. Cable splices shall be made in the pullboxes or terminal boxes only. Ground conductor shall be installed in the duct and shall be extended through each electrical-distribution-system pullbox and into each terminal box. Each circuit shall be identified by means of non-ferrous-metal or fiber tags or approved equal, in each pullbox, each junction box, and at each terminal.

10. SECONDARY DISTRIBUTION CENTERS.

10.1 General. Secondary distribution switchboard centers shall be of ratings and arrangements as indicated on the drawings and shall be the outdoor type, totally enclosed NEMA raintight housing.

10.1.1 Incoming Line Section shall have bottom feed lugs for underground service cable entrance, space for utility company current transformers and metering. Section width and depth shall conform to serving utility specifications for service entrance equipment. Full capacity buses shall extend the entire height of the section with top feed to the adjacent distribution sections.

10.1.2 Distribution Sections shall be fully bused vertical groupings of combination circuit breaker/magnetic contactor modules of standarized and interchangeable design as shown on the drawings. Each feeder compartment shall be isolated within the section with drawout connections to permit removal or insertion without disturbing load or control wiring. Entire section shall be NEMA Class I wired.

11. INTEGRAL TRANSFORMER-LOAD CENTERS.

11.1 General. Integral transformer-load centers shall be of ratings and arrangements as indicated on the drawings and shall be the outdoor type, totally enclosed NEMA raintight housing.

11.1.1 Incoming Line Section shall have bottom feed lugs for underground service cable entrance, dry type transformer and full capacity buses extending into the adjacent distribution panelboard section.

11.1.2 Transformer shall be dry type, with insulation temperature classification of 220 degrees C and 150 degrees C winding temperature rise limits. The transformer shall be capable of supplying the load rating specified with overload capability in accordance with ANSI Standard C57-12. Transformer compartment shall be ventilated and filtered to prevent unacceptable temperature rises and dust or insect penetration.

11.1.3 Distribution Panelboard Section. Circuit breaker type distribution panelboard shall be full section mounted with breakers, split busing and contactor as scheduled on the drawings. Breakers shall have a minimum interrupting capacity of 65,000 symmetrical RMS amperes at 208V. Section shall be fully bused to provide maximum space for future breaker additions.

12. SECONDARY FEEDER AND BRANCH CIRCUIT CABLE SYSTEM shall consist of 600-volt rubber insulated, polychloroprene jacketed cable, rubber insulated underground-service-entrance cable, cross-linked polyethylene insulated, polyvinyl chloride jacketed cable cross-linked polyethylene insulated, polyethylene jacketed cable at the option of the Contractor. Conduit sizes scheduled on the drawings are based upon National Electrical Code type THWN and XHHW insulation. Other insulation types may require larger conduit sizes. In all cases where the Contractor at his option chooses a cable insulation, the conduit size shall be in conformance with N.E.C. Table 1, Chapter 9.

12.1 Cable Splices shall be made by qualified cable splicers in strict accordance with the cable manufacturer's recommendations, except where otherwise specified herein. A copy of the manufacturer's recommendations shall be furnished to the Contracting Officer for inspection purposes. Splices in cables shall provide insulation equal in every respect to that of the cable. In order to prevent the possibility of moisture entering the splice, the jacket shall be cut back sufficiently to expose the required length of insulation between the jacket and the tapered end of the insulation as recommended by the manufacturer of the splicing material. In splicing cables, special care shall be taken to insure that all wax is removed from the section to be covered with splicing tape. Nonmetallic jacketed cable may be spliced by means of resin filled or pressure filled resin system.

12.2 Service Connections to Buildings. Service cables shall be extended into the various buildings as indicated, and shall be properly connected to the main service equipment. After installation of cables, conduit shall be sealed to prevent entrance of moisture or gases into building.

13. SECONDARY JUNCTION BOXES shall be installed where indicated, for the purpose of splicing or connecting secondary cables. Boxes and covers shall be made of cast iron with zinc-coated or aluminized finish, and of the sizes indicated. A suitable gasket shall be installed between the box and cover, for watertightness. A sufficient number of cover screws shall be installed to hold the cover firmly in place along its entire contact surface. Unless otherwise indicated, the approximate inside dimensions of these boxes shall be 12 inches square and 6 inches deep.

14. PARK LIGHTING SYSTEM shall be 480 volt, three phase as indicated. Size, type and rating of lighting system cable shall be as indicated on the drawings. All cable shall be underground.

15. PARK LIGHTING CONTROL. General area, walkway and parking lot lighting shall be controlled by fully automatic, electrically operated contactors as indicated. The contactors shall be equipped with all necessary auxiliary contacts and standard attachments and shall be operated by photoelectric relay oriented toward north sky. A three position switch for manual control of each system or circuit shall be provided where indicated. Control switch shall be marked On, Off, and Automatic.

16. SPORTS LIGHTING CONTROL. Individual and group sports area lighting shall be controlled by fully automatic, electrically operated contactors as indicated. The contactors shall be equipped with all necessary auxiliary contacts and standard attachments and shall be operated by alternate action pushbuttons located in the lighting control console as detailed on the drawings. A three position switch for manual override of the control console shall be provided where indicated. Control switch shall be marked On, Off, and Automatic.

17. WALKWAY AND BIKEWAY POLES shall be nominal 16 foot steel, 5-inch square straigth with black baked acrylic enamel finish. Poles shall be designed for underground supply conductors, as indicated. All poles shall be of the anchor-base type. Each pole shall be provided with four 3/4-inch by 30-inch by 3-inch galvanized steel anchor bolts, threaded at the top end. Hand holes shall be provided near the bottom of each pole.

18. SPORTS AND PARKING LIGHTING POLES shall be nominal 20 or 30 foot steel, as indicated, 6-inch square straight with black baked acrylic enamel finish. Poles shall be designed for underground supply conductors, as indicated. All poles shall be of the anchor-base type. Each pole shall be provided with four 1-inch by 36-inch by 4-inch galvanized steel anchor bolts, threaded at the top end. Hand holes shall be provided near the bottom of each pole.

19. BASEBALL LIGHTING POLES shall be nominal 100 foot steel, three section, two platform, round tapered 55,000 psi minimum yield strength with prime grey finish inside and outside. Each pole shall be provided with six 2-1/4-inch by 96-inch galvanized steel anchor bolts, threaded at the top end. The steel plate base flange shall be provided with an external grounding nut. Steps of 3/4-inch by 6-inch galvanized steel carriage bolts threaded into forged nuts welded to pole shall begin at 12 feet from the base and be spaced at 15-inch intervals on alternating sides of pole. Each pole shall be designed to support a minimum of 48 type "H" fixtures with platforms under an isotach zone rating of 80 MPHI.

20. LUMINAIRES shall be of the enclosed type for high pressure sodium vapor lamps. Ballasts shall be of the high-power factor type suitable for the lamp served. Starting current shall be less than operating current and ballast current with a faulted or open lamp shall be less than normal operating current. Luminaire types shall be as indicated on drawings 16-01, 02, 03, 04, and 05 in section 16A.

21. STEP AND SIGN LIGHTING. Step and sign lighting luminaires shall operate on 120V power and shall be as indicated on drawings 16-06 and 16-07 in section 16A. Wiring to step and sign luminaires shall terminate in a watertight junction box attached to the luminaire housing. Luminaires shall be of the submersible type.

22. LUMINAIRE WIRING. All outside luminaires shall be wired above the 100-year flood level. No wiring splices, taps or terminations shall be made in the bases of poles or at any point below the 100-year flood level. All wiring to non-watertight junction points shall be pulled continuous from service to luminaire within the poles. Refer to Site Finish Grading Plans for elevations of pole bases. Wiring to pedestrian underpass luminaires on ground fault interrupting circuit breakers is excepted from this requirement.

23. TIME CLOCKS shall be equipped with Astronomic dial and a 3-way manual on-off-automatic switch. Time switch shall be powered by a self-starting synchronous motor, with spring-driven reserve, which shall be sufficient to operate the time switch contacts for at least 36 hours after power failure. On restoration of power, time switch shall transfer to synchronous motor drive and automatically rewind reserve. ON operation shall occur automatically with adjustability of 20 or 40 minutes before sunset for Scottsdale, Arizona. OFF operation shall be adjustable from 8:30 PM to 2:30 AM in one-half hour increments or at sunrise. Time switch contacts shall be rated at 20 amperes per pole continuous at 277 volts and shall be SPDT. Manual switches shall be integrally mounted with time switch. Enclosure shall be NEMA I surface type, finished in baked grey enamel with 3/4" knockouts on bottom, both sides and top. Provision shall be made for positive padlocking and sealing. Manual switches shall be available when case is locked.

24. PHOTOELECTRIC CONTROLS shall be a replaceable, weatherproof, plug-in or twist-lock assembly with adjustable operation range of approximately 0.5 to 5.0 foot-candles, factory set at approximately 1.0 foot-candle, operating from 120 bolts a.c. A time delay of approximately 15 seconds to prevent false switching due to temporary changes in natural light shall be built-in to the photocontrol. Contacts shall be rated at 20 amperes continuous at 277 volts and shall be SPST. Nominal voltage rating shall be 105-277 volts.

25. PARK LIGHTING CONTROL CONSOLE shall be of 14 gauge steel with all seams welded. All exterior panels neoprene gasketed and secured with captivated panel screws threaded into sealed wells. Console doors and drawer to be as detailed on the drawings. Doors and drawer to be key locked. Sloping control panel shall be piano-hinged along the bottom edge and securely fastened along top and sides with panel screws. Writing desks of 1/2" plywood with laminated plastic surface shall be provided. Gasketed rear access panel with two 3/4" and four 2" conduit knock outs. Four wiring terminal blocks with 36 two row lines each shall be mounted back of the control panel. Terminal blocks rated 15 amps continuous at 150 volts with 6-32x1/4" sems pressure screw binders, 1/32" thick nickle plated brass connector plates, and marking covers with spring clip retainers. Console finish shall be baked white enamel inside and Fed. color No. 20062 over grey, primed, metal phosphatized outside surface. Graphic control panel to be baked white enamel with engraved and black enamel filled graphic symbols. Alternate action pushbuttons shall be lighted with 28 volt a.c. lamps from behind pushbutton caps. Console shall contain a 120V to 28V transformer for lamp power, fused.

26. GROUNDING shall conform to applicable requirements in the National Electrical Code, the National Electrical Safety Code, and to requirements herein. Neutral conductors, metallic conduits, junction boxes, metal enclosures, and all non-current-carrying metallic parts of equipment, shall be grounded. Ground rods shall be made of copper, or copper-clad steel, not less than 3/4 inch by 8 feet long, and shall be driven into the earth at least 8 feet.

26.1 Transformer-Station Grounding shall be as indicated, except that ground resistance shall not exceed 25 ohms. A bare copper cable not smaller than No. 4/0 AWG shall be installed not less than 24 inches below grade connecting to the indicated ground rods. Equipment connections shall be not smaller than No. 4 AWG. Transformer neutral connections shall not be smaller than No. 1/0 AWG. Where the rated secondary current exceeds 400 amperes, the size of the trnsformer neutral ground connection shall be increased in size to not less than one-half the cross-section area of the secondary-phase conductors. Where the measured ground resistance exceeds 25 ohms, additional ground rods or deep-driven sectional ground rods shall be installed not less than 6 feet apart, and shall be connected by cable not smaller than No. 4/0 AWG,2 feet below grade, until a ground resistance of 25 ohms or less is obtained, except that the total length of additional ground rods required shall not exceed 50 feet. Ground connections shall be made by solderless lugs, or shall be welded by an approved molded fusion process.

26.2 Building Grounding. Ground bus and UFER ground system shall be provided in the buildings as indicated in Spec. 16A. Non-current-carrying metal parts of electric equipment shall be effectively grounded by connection to the bus. The ground bus shall be connected to both the system neutral water-service ground, and to the UFER ground system. Ground conductors shall be copper wire, cable, or bus bar of the type and size as indicated, or as required by National Electrical Code. Ground conductors shall be installed in a neat and workmanlike manner and shall be securely held in place by means of straps placed at proper intervals. Connections and splices in the grounding system shall be made by means of solderless connectors, except where solder-type lugs are furnished on equipment.

27. TESTS.

27.1 Operating Test. After the installation has been completed, and at such time as the Contracting Officer may direct, the Contractor shall conduct an operating test for approval. The equipment shall be demonstrated to operate in accordance with the requirements of this section of the specifications. The test shall be performed in the presence of the Contracting Officer. The Contractor shall furnish the necessary instruments and personnel required for the test, and the Government will furnish the necessary electric power.

27.2 Ground-Resistance Measurements of each ground rod and UFER system shall be taken and certified by the Contractor to the Contracting Officer. The Contractor shall submit in writing to the Contracting Officer upon completion of the project, the measured ground resistance of each ground rod and grounding system, indicating the location of the rod and grounding system, as well as the resistance and soil conditions at the time the measurements were made. When the building water service is used as a ground or part of the grounding system, ground-resistance measurements shall also be made of this connection. Ground-resistance measurements shall be made in normally dry weather, not less than 24 hours after rainfall, and with the ground under tests isolated from other grounds.

27.3 Factory Test Reports on equipment, including the impulse tests specified for transformers, shall be certified by the manufacturer or testing laboratory and furnished by the Contractor to the Contracting Officer.

28. GUARANTEE. The following equipment furnished under this section of the specifications shall be guaranteed for a period of one year from the date of acceptance thereof, either for beneficial use or final acceptance, whichever is earlier, against defective materials, design, and workmanship.

Integral transformer load centers.

Park-lighting control equipment.

Park-lighting luminaires and poles.

Switch gear.

Transformers.

Upon receipt of notice from the Government of failure of any part of the guaranteed equipment during the guarantee period, new replacement parts shall be furnished and installed promptly by the Contractor at no additional cost to the Government.

29. PAYMENT. No separate payment will be made for the work covered under this section, and all costs in connection therewith shall be included in the lump-sum contract price for the entire work to be performed under this contract.

* * * * *

SECTION 16C

FIRE DETECTION AND ALARM SYSTEM

Index

1. Applicable Publications
2. General
3. Materials and Equipment
4. Installation and Wiring
5. Audio-Visual Alarms
6. Manual Fire Alarm Boxes
7. Fire Detecting Equipment
8. Control Unit
9. Drawing and Manuals
10. Tools and Spare Parts
11. Tests

1. APPLICABLE PUBLICATIONS. The following publications of the issues listed below, but referred to thereafter by basic designation only, form a part of this specification to the extent indicated by the references thereto.

1.1 Factory Mutual System (FMS) Publication.

Factory Mutual Approval Guide (1976, Suppl. I, Mar 76, Suppl. II, Jun 76).

1.2 National Fire Protection Association (NFPA) Standards.

No. 70-1975	National Electrical Code
No. 72D-1975	Proprietary Protective Signaling Systems

1.3 Underwriters Laboratories, Inc. (UL) Publication.

Fire Protection Equipment Directory (January 1977 with Quarterly Supplements).

2. GENERAL. The equipment shall be properly installed completely interconnected, and placed in working order. The systems shall provide electrically supervised fire detection and fire alarms of the noncoded type where indicated on the drawings.

2.1 Operation. Operation of any automatic fire detection device or manual station shall resut in the continuous ringing of all fire alarm bells in the building.

2.2 Governing Requirements. Except as modified herein or on the drawings, the installation shall conform in all respects to NFPA Standard 72D.

3. MATERIALS AND EQUIPMENT

3.1 General Requirements. Materials and equipment shall be standard, products of the manufacturer's latest design, and suitable to perform the functions intended. Where 2 or more pieces of equipment must perform the smae functions, they shall be duplicates produced by one manufacturer. The name of the manufacturer, and the serial numbers, shall appear on all major components. Locks for all cabinets shall be keyed alike. Equipment added to an existing system shall function in the same manner as similar components of the existing system.

3.2 Quality Requirements. All materials and equipment shall conform to the requirements of the UL, or the FMS for fire-alarm systems of the type indicated. The Contractor shall submit proof that the items furnished under this specification conform to these requirements. The UL label or seal, or listing in the UL Fire Protection Equipment Directory will be accepted as evidence that the items conform to UL requirements. The FMS label or seal, or listing in the Factory Mutual Approval Guide will be accepted as sufficient evidence that the items conform to the FMS requirements.

3.3 Approval of Materials, Equipment, and Installer. Within 30 days after receipt of notice to proced and prior to starting installation, the Contractor shall submit to the Contracting Officer for approval a complete schedule, in triplicate, of materials and equipment proposed for installation. The Contractor shall also submit for approval at the same time the qualification of the installing firm, including the supplier's certificate of acceptance of the qualifications of the installing firm. The schedule shall include catalog numbers, samples, drawings, testing laboratory's report on the device to be installed, and such other descriptive matter as may be required.

3.4 Spare-Parts Data. As soon as practicable after approval of the list of equipment, the Contractor shall furnish 4 copies of spare-parts data for each different item of equipment listed. The data shall include a complete list of parts and supplies, with current unit prices and source of supply; a list of parts and supplies that are either normally furnished at no extra cost with the purchase of the equipment or specified below to be furnished as part of the contract; and a list of additional items recommended by the manufacturer to assure efficient operation for a period of 120 days at the particular installation.

3.5 Qualifications of Installer. The system shall be installed by an experienced firm regularly engaged in the installation of automatic fire-detection and alarm systems in accordance with NFPA standards. The Contracting Officer may reject any proposed installer who cannot show evidence of such qualifications.

4. INSTALLATION AND WIRING. System components shall be securely fastened to their support independently of the wiring. Runs of conduit, wire, and cable shall be straight, neatly arranged, properly supported, and parallel or perpendicular to walls and partitions. Installation of wiring and fire detecting circuit shall conform to Article 210 of NFPA Standard No. 72D. Spot-type detectors shall be connected directly to the detector-circuit line wires.

5. AUDIO-VISUAL ALARMS. Vibrating horns with flashing light shall be used for noncoded signals. Horns shall be heavy duty with 104 db sound output at 10 feet, and approved for the intended use, and shall operate on low-voltage rectified current. The operating mechanism shall be housed behind the horn grille. Flashing dual lamp assembly shall have a red lens lettered "FIRE". Alarms shall be mounted not less than 7 feet above the floor and below the bottom surface of the ceiling construction, and shall be located as indicated.

6. MANUAL FIRE ALARM BOXES shall be of the noncoded type located near exits in the approximate locations indicated and mounted 4-1/2 feet above the floor. Surface-mounted boxes shall have an integral or matching back box. Outdoor boxes shall be approved for such use. Boxes shall be of the break-glass pull-lever type.

7. FIRE DETECTING EQUIPMENT shall be of the following types, selected by the Contractor and as approved by the Contracting Officer: a. fixed-temperature type; b. rate-of-rise type; c. combination fixed temperature-and-rate-of-rise type; d. other approved type operating on any other principle suited to the conditions and acceptable to the Contracting Officer. Detector circuit design shall bysuitable for the types and numbers of detectors, as approved, and shall limit detector circuit current not to exceed ratings of the detectors and associated relays.

7.1 Location. Detecting equipment shall be installed throughout permanently divided parts of the premises including all rooms, halls, corridors, storage areas, basements, attics, lofts, closets, elevator shafts, enclosed stairways, dumb-waiter shafts, chutes, utility crawl spaces, and other minor subdivisions and enclosures, excluding wardrobes of wood or metal construction. For the purpose of this specification, a surface shall be considered smooth where broken as a result of variances in elevation or by obstructions such as structural members, ducts, or similar conditions having a depth of 10 or less inches.

7.2 Spacing. The detector spacing on smooth surfaces shall not exceed the distance recommended by the testing and approving laboratory for the particular device installed. In areas where irregularities exceed those described, the detector spacing shall be reduced to provide detection coverage equaling or exceeding that required for smooth surfaces. As open area underneath a deck, mezzanine, or floor landing of a stairway having a minor linear dimension of 4 or more feet shall be considered a separate subdivision and protected accordingly.

7.3 Detectors. Temperature ratings of thermostatic-type detectors shall be selected by the Contractor and approved by the Contracting Officer, in accordance with Table 1.

TABLE 1

DETECTOR TEMPERATURE RATINGS

Temperatures are in degrees Fahrenheit

Ceiling temperatures

Above		Note exceeding	Thermostat ratings
–	to	100	135 to 165, ordinary
100	to	150	175 to 225, intermediate
150	to	225	250 to 300, high
225	to	300	325 to 360, extra high

8. CONTROL UNIT shall be installed as part of the system in each protected building and shall be approved for use with the fire-detecting equipment, manual fire-alarm boxes or stations, and alarm-sounding appliances. The control unit shall be located where indicated and shall be housed in a substantial steel cabinet with lock and key. The cabinet shall be painted inside and out. The control unit shall include a suitable means for testing the system and shall have an indicating meter that will show at all times the current passing through each electrically supervised circuit. The meter scale shall be limited to 3 times the normal current. The unit shall be arranged so as to operate the alarm bells in the event of fire and to continue operation until silenced by switch within the unit cabinet. Operation of the silencing switch shall light as indicator lamp. Meter and indicator lamp shall be plainly visible when the cabinet of the control unit is closed. Relays shall be the plug-in type.

9. DRAWING AND MANUALS. Upon completion of the installation and prior to final inspection, the Contractor shall furnish 4 copies of "as-built" drawings. If spot-type detectors are used, the "as-built" drawings shall show by number the detectors in the exact sequence in which they are installed on the circuit. In addition, the Contractor shall furnish 4 copies of a manual giving complete instructions for the operation, inspection, testing, and maintenance of the system including wiring diagrams.

10. TOOLS AND SPARE PARTS. Special tools necessary for the maintenance of the equipment shall be furnished. One spare set of fuses of each type and size required, and 2 percent of the total number of each type of detector, but not less than 2 thereof, shall be furnished. (A minimum of 200 feet of each type of line detector shall be provided.)

11. TESTS. After complete installation of the equipment, and at the time as directed by the Contracting Officer, the Contractor shall conduct tests to demonstrate that operating and installation requirements of this specification have been met.

* * * * *

U. S. ARMY ENGINEER DISTRICT, LOS ANGELES
300 North Los Angeles Street
Los Angeles, California

Army - C. of E. - Los Angeles