Property of
Flood Control District of MC Library
Please Return to
2801 W. Durango
Phoenix, AZ 85009

Final
BRIDGE SCOUR ASSESSMENT REPORTS
TECHNICAL APPENDIX
for 16 Maricopa County Bridges

VOLUME IV
Final Bridge Scour Structural Calculations

July, 1996

MARICOPA COUNTY DEPARTMENT OF TRANSPORTATION (MCDOT)
Work Order No. 80407

Cannon & Associates, Inc.
Consulting Engineers

Final
BRIDGE SCOUR ASSESSMENT REPORTS
TECHNICAL APPENDIX
for 16 Maricopa County Bridges
CA 94046-1

VOLUME IV
Final Bridge Scour Structural Calculations

July, 1996

Prepared for
MARICOPA COUNTY
DEPARTMENT OF
TRANSPORTATION (MCDOT)
2910 West Durango Street
Phoenix, Arizona 85009
602-506-8600

Prepared by
Cannon & Associates, Inc.
Consulting Engineers
2701 North 16th Street, Suite 122
Phoenix, Arizona 85016
602-230-0563

MCDOT W.O. No. 80407
Maricopa County Department of Transportation
BRIDGE SCOUR ASSESSMENT

VOLUME I: FINAL BRIDGE SCOUR ASSESSMENT REPORTS
for Structure Numbers 9691, 8981, 9301, 9859, 9145, 7819, 8028, 8639

VOLUME II: FINAL BRIDGE SCOUR ASSESSMENT REPORTS
for Structure Numbers 9427, 9588, 9999, 8038, 7818, 9154, 9142, 7553

VOLUME III: TECHNICAL APPENDIX
Final Bridge Scour Hydraulic Calculations

VOLUME IV: TECHNICAL APPENDIX
Final Bridge Scour Structural Calculations

VOLUME V: TECHNICAL APPENDIX
Final Geotechnical Analysis

Cannon & Associates, Inc.
Consulting Engineers

TABLE OF CONTENTS
VOLUME IV

Bridge 1:	**Structural Calculations for Bell Road Bridge over Agua Fria River Structure #9691**
Bridge 2:	**Structural Calculations for Olive Avenue Bridge over Agua Fria River Structure #8981**
Bridge 4:	**Structural Calculations for Camelback Road Bridge over Agua Fria River Structure #9859**
Bridge 5:	**Structural Calculations for Indian School Road Bridge over Agua Fria River Structure #9145**
Bridge 11:	**Structural Calculations for Old US 80 Bridge over Hassayampa River Structure #9999**
Bridge 12:	**Structural Calculations for Rittenhouse Bridge over Queen Creek Structure #8038**
Bridge 13:	**Structural Calculations for Hawes Road Bridge over Queen Creek Structure #7818**
Bridge 14:	**Structural Calculations for Power Road Bridge over Queen Creek Structure #9154**
Bridge 15:	**Structural Calculations for Higley Road Bridge over Queen Creek Structure #9142**
Bridge 16:	**Structural Calculations for Deer Valley Road Bridge over unnamed wash Structure #7553**

STRUCTURAL CALCULATIONS

FOR

BELL ROAD BRIDGE

AT

AQUA FRIA RIVER

Registered Professional Engineer (Structural)
CERTIFICATE NO.
14766
ROBERT DAVIS
TURTON
Date Signed 7/9/96
ARIZONA, U.S.A.

Robert D. Turton

Cannon & Associates, Inc.
Consulting Engineers

project no. : 94046-1
project : Bell Rd Bridge
designed by : HM
checked by : TB
date : 5/96 sht. 1 of 23

BASIS OF ANALYSIS

DESIGN SPECIFICATION

American Association of State Highway and Transportation Officials Standard Specifications for Highway Bridges, 1992 Edition, revised to date.

EXISTING BRIDGE PLANS

As-built bridge plan sheets 14 thru 32, 34 & 34A dated February 1, 1982. Bell Road Bridge over Agua Fria River, Project No. 68067.

GEOTECHNICAL INVESTIGATION

Geotechnical Investigation Report by AGRA Earth & Environmental, Inc., Job No. E95-36, dated 4/15/96. Ultimate downward capacity of driven pile foundations were used with a safety factor of 1.0 under critical flow conditions.

HYDRAULIC DATA

Final Scour Analysis Report by Morrison-Maierle/CSSA, Inc. Dated March 1996.
$Q_{Low\ Chord}$ = 145,600 cfs, Average velocity = 12.4 ft/sec., Angle of attack = 0 degrees,
H.W. Elev. = 1161.29 (Bridge open to traffic)
Total Scour = 23'

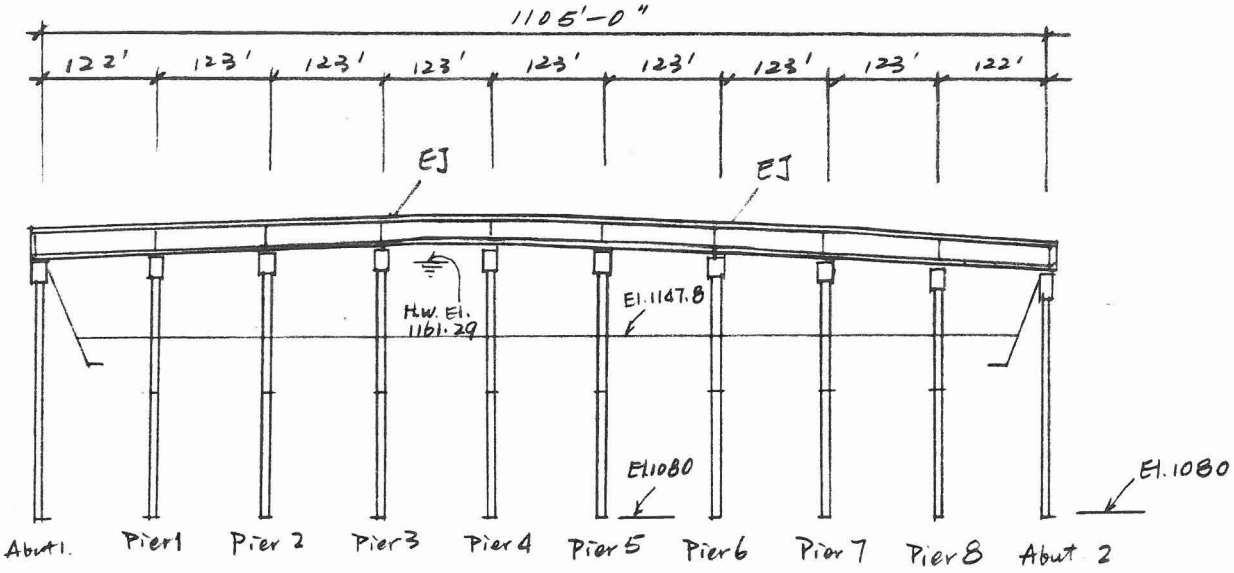

Section ⓐ Construction ℄

9 - span Prestressed Concrete Girder Bridge

0° skew

Cannon & Associates, Inc.
Consulting Engineers

project no. : 94046-1
project : Bell Rd Bridge
designed by : HM
checked by : TB
date : 5/96 sht. 3 of 23

Pier Analysis

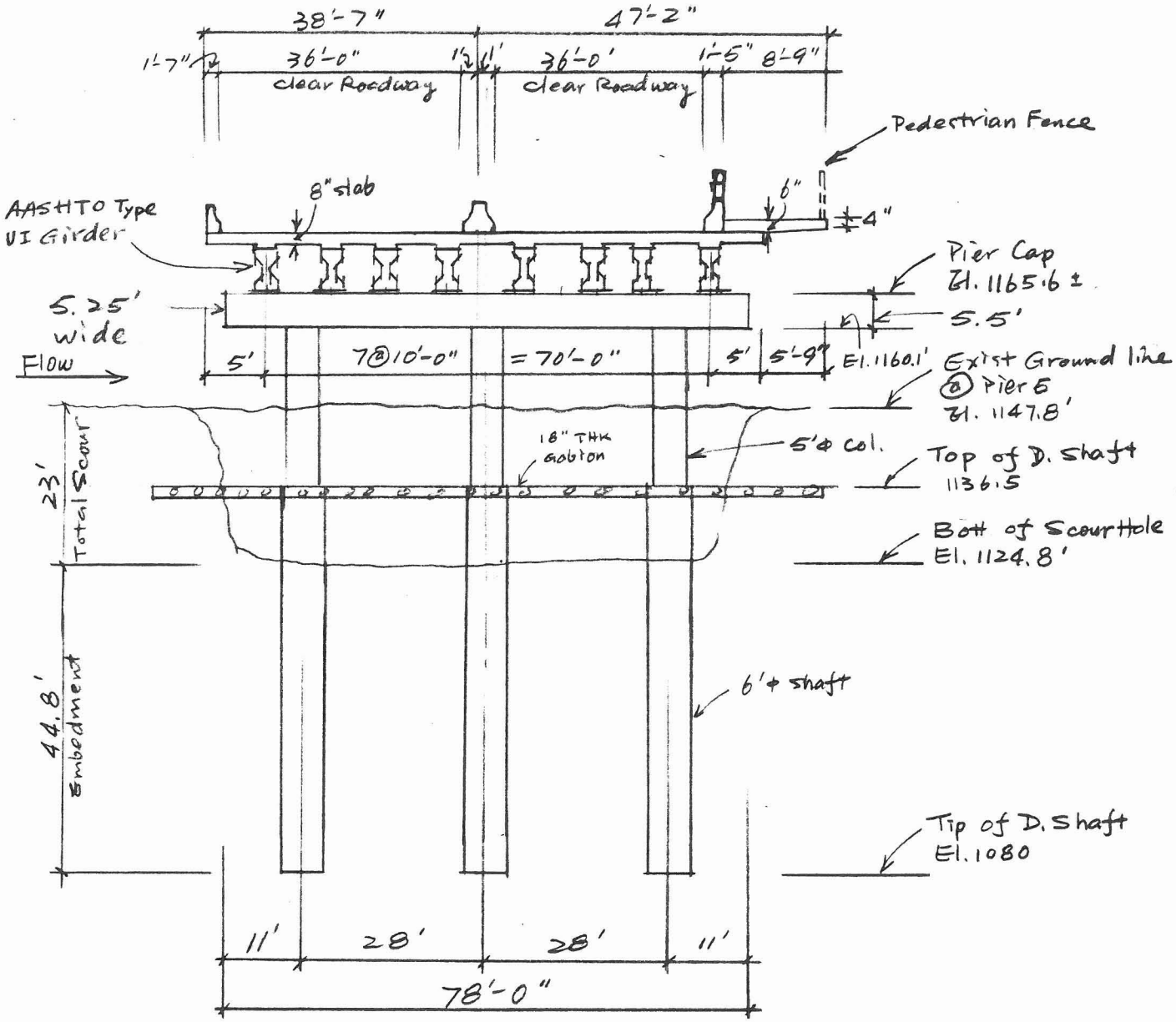

Pier Elevation

Cannon & Associates, Inc.
Consulting Engineers

project no. : 94046-1
project : Bell Rd. Bridge
designed by : HM
checked by : TB
date : 5/96 sht. 4 of 23

Pier Analysis (CONT.)

Dead Load (superstructure)

Deck Slab: $(8''/12)(80.0')(0.15^{k/ft^3})$	$= 8.0^{k/'}$
Barrier: $2(0.4^{k/'}) + 1(0.5^{k/'})$	$= 1.3^{k/'}$
Steel Railing @ Top of Right Barrier:	$= 0.1^{k/'}$
Pedestrian Fence:	$= 0.1^{k/'}$
Conc. Buildup @ Top of Girder (use 3" Avg.): $(3''/12)(42''/12)(0.15)(8)$	$= 1.05^{k/'}$
Pedestrian Sidewalk Slab: $(5.3''/12)(8.75')(0.15^{k/ft^3})$	$= 0.58^{k/'}$
AASHTO VI Girder: $(1085^{in^2}/144)(0.15)(8)$	$= 9.04^{k/'}$
Intermediate Diaphragm: $[(64''/12)70' - 7(\frac{1085 in^2}{144})](9''/12)(0.15^{k/ft^3})(3)(1/23')$ (Dia.)	$= 0.88^{k/'}$
Misc:	$= 0.05^{k/'}$
	$21.1^{k/'}$

Pier Load

Dead Load

Max. Supper Stru. Reaction $= 21.1^{k/'}(123')$	$= 2595.3^{k}$
Pier Cap: $5.25'(5.5')(78')(0.15)$	$= 338^{k}$
Diaphragm @ Pier: $[(64''/12)70' - 7(\frac{1085}{144})](9/12)(0.15)(2)$ (Dia.)	$= 72.13^{k}$
	$\Sigma = 3005^{k}$

Approx. Dead Load Per Shaft: (To Scour Line)

$$3005^{k}/3_{shafts} + [\pi(\tfrac{5}{2})^2(23.6') + \pi(\tfrac{6}{2})^2(11.7')](0.15^{k/ft^3}) = 1121\ ^{k}/shaft$$

Live Load (HS20, 4 lanes)

LL reaction $= 120.5^{k}/lane$ (Per Continuous Beam Analysis.)

$$LL = 120.5(4)(0.75)/3_{shafts} = 120.5^{k}/shaft$$

(0.75 ← LL reduction)

Check Capacity of Shafts: (Based on Soil Capacity)

Service Dead Load $= 1121^{k}$
Service Live Load $= 120.5$
$\Big\}\ 1241.5^{k}$

Ultimate Shaft Capacity $= 3850^{k} > 1241.5^{k}$ O.K.

(see sht. 7)

∴ Check Lateral Stability.

Pier Analysis (CONT.)

check if shaft is flexible (soil : sand)

$$n_h = \left(\frac{675\,pci - 98\,pci}{40' - 5'}\right)(6') = 98.91\ \#/in^3$$

slope of "K", $\Delta = 1/2''$, see AGRA chart @ sht. 23

$$EI = \frac{0.4\,E_c\,I_g}{1+0.0} = 1.90 \times 10^{12}$$

use $\beta_d = 0.0$

$E_c = 3605$ ksi

$I_g = 1318499\ in^4$

$$\eta = \sqrt[5]{\frac{n}{EI}} = 0.00877$$

$$\eta L = 0.00877(45')(12''/') = 4.74 > 2.0$$

∴ Consider pile as flexible.

Pier Analysis (CONT.)

Project Bell Road Bridge Job No. E95-36

FIGURE 1

ESTIMATED ULTIMATE DOWNWARD CAPACITY OF STRAIGHT, DRILLED, CAST-IN-PLACE CONCRETE PIERS

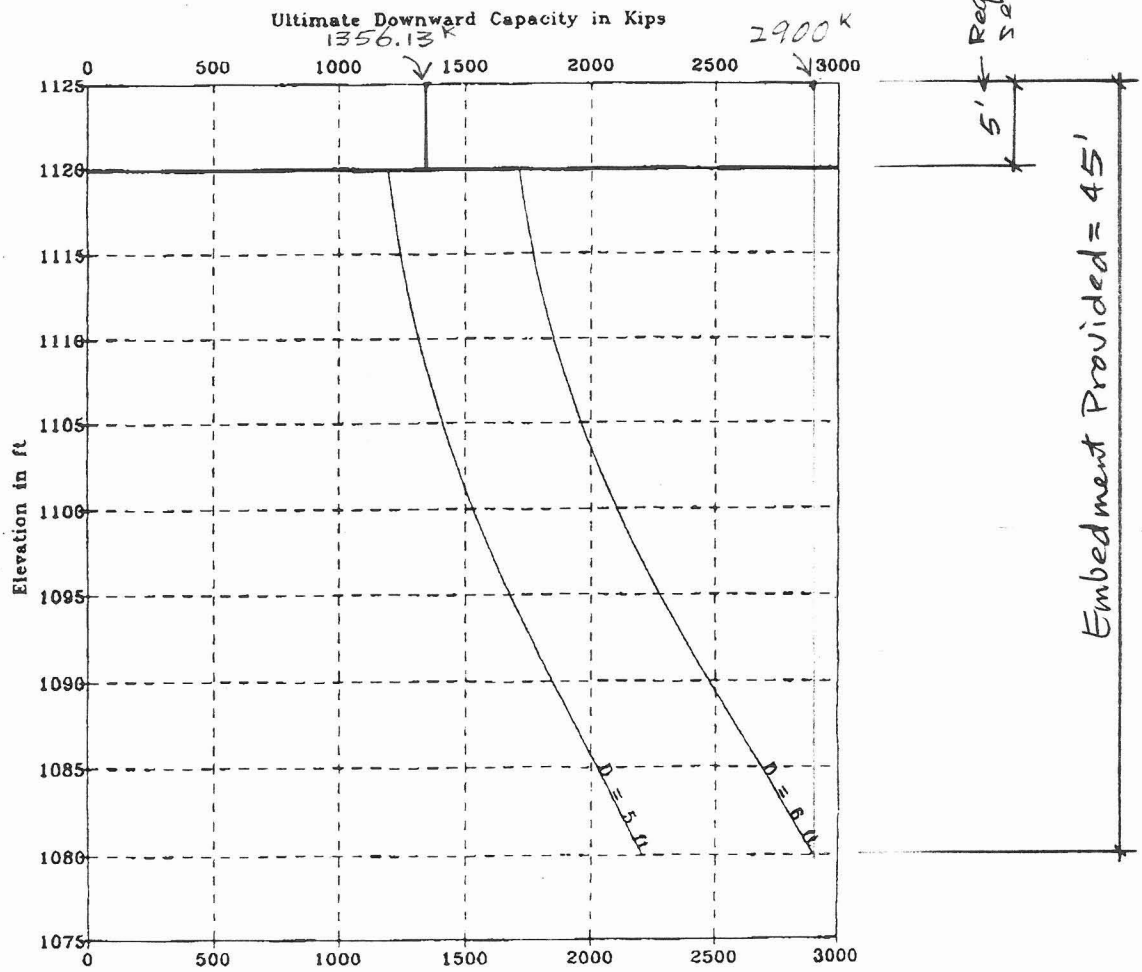

AGRA
Earth & Environmental, Inc.

Reference: Geotechnical Investigation Report by AGRA Earth & Environmental, Inc., Job No. E95-36, dated 4/15/96. with revision dated 7/3/96

Pier Analysis (cont.)

DL per girder:

$(2595.3 + 72.13)/8$ girder $= 333.4^k$/girder, use 333.5 /girder

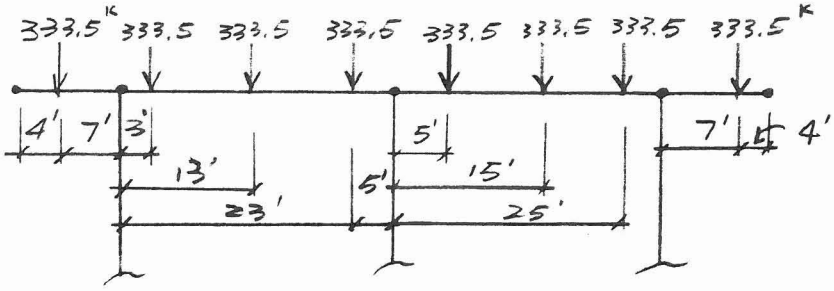

LL per girder

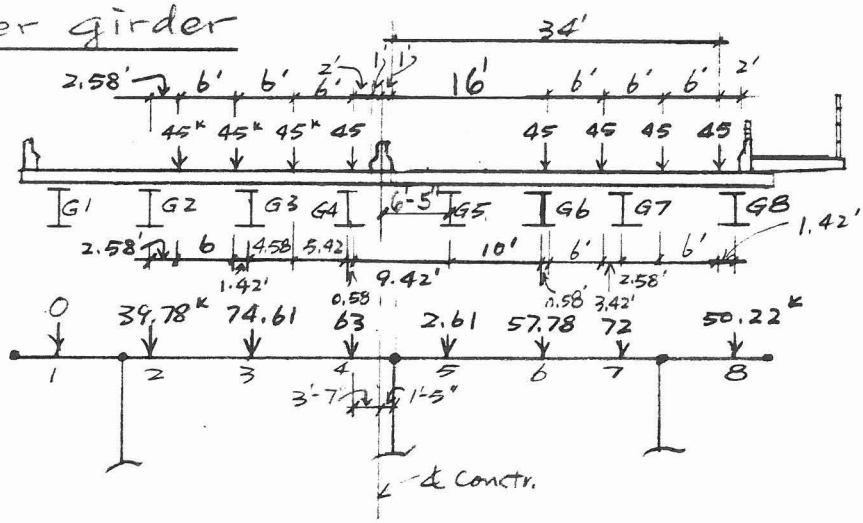

Wheel Load:

$120.5^k(0.75)/2$

↑ LL reduction

$= 45^k$/wheel

$G1 = 0$

$G2 = 45\left(\frac{7.42 + 1.42}{10}\right) = 39.78^k$

$G3 = 45\left(\frac{2.58 + 8.58 + 5.42}{10}\right) = 74.61^k$

$G4 = 45\left(\frac{4.58 + 9.42}{10}\right) = 63.0^k$

$G5 = 45\left(\frac{0.58}{10}\right) = 2.61^k$

$G6 = 45\left(\frac{9.42 + 3.42}{10}\right) = 57.78^k$

$G7 = 45\left(\frac{0.58 + 6.58 + 7.42 + 1.42}{10}\right) = 72^k$

$G8 = 45\left(\frac{2.58 + 8.58}{10}\right) = 50.22^k$

$\Sigma = 360^k$

Pier Analysis (CONT.)

Lateral Analysis

Stream Flow Forces ($Q_{low\ chord}$ Flow Condition)

H.W. Elevation = 1161.29
Avg. Velocity = 12.4 ft/sec.
Angle of Attack = 0°, for analysis, use 5° min (Attack ∡ + 5°)
Total Scour = 23'

Stream Force Criteria

- shaft clear spacing = 23' > 16',
  ∴ Assume each shaft carries stream force separately. Use abstruction width based on projected area at 5° angle with 2' of debris at each side of projected area.
- Assume stream force on pier cap is equally distributed to each shaft.
- Use K=1.4 for shafts with debris at first 12' from H.W. Elev.
  K=0.7 for round shaft without debris.

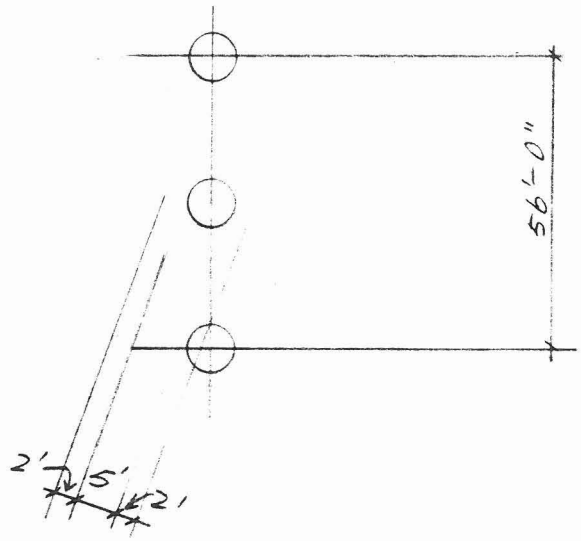

Projected width:
5' + 2(2') = 9'

Projected width: (@ Cap)
7.8' (sin 5°) + 2(2')
= 6.79 + 4'
= 10.8'...

Pier Analysis (CONT.)

Stream Flow (CONT.)

$$P_{max} = 2\,P_{avg.} = 2\left[1.4(12.4)^2/1000\right] = 0.431\ ^{k}/_{ft^2}$$

$$\Delta P = 0.431/(1161.29 - 1147.8) = 0.0315\ ^{ksf}/_{'}$$

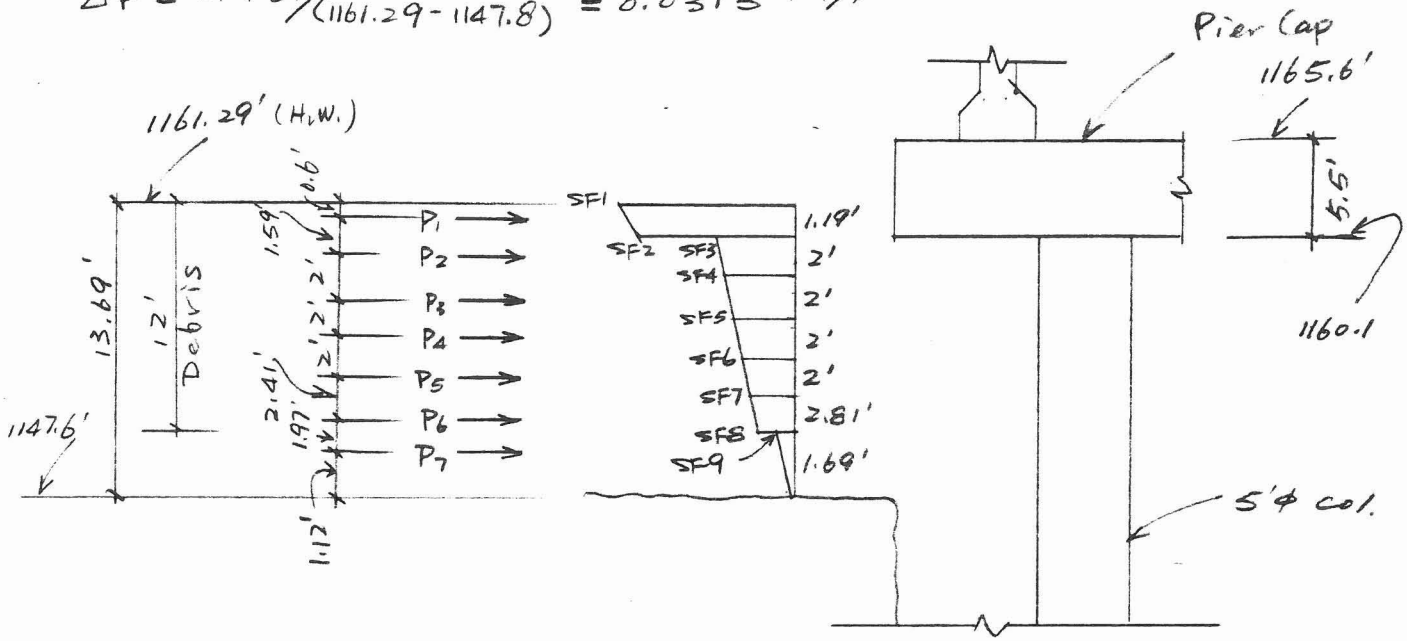

$SF1 = 0.431^{ksf}(10.8')$	$= 4.65\ ^{k}/_{'}$
$SF2 = [0.431 - 1.19'(0.0315)](10.8')$	$= 4.25\ ^{k}/_{'}$
$SF3 = [0.431 - 1.19(0.0315)](9')$	$= 3.54$
$SF4 = [0.431 - 3.19(0.0315)](9')$	$= 2.97$
$SF5 = [0.431 - 5.19(0.0315)](9')$	$= 2.41$
$SF6 = [0.431 - 7.19(0.0315)](9')$	$= 1.84$
$SF7 = [0.431 - 9.19(0.0315)](9')$	$= 1.27$
$SF8 = [0.431 - 12(0.0315)](9')$	$= 0.48$
$SF9 = [0.431 - 12(0.0315)](0.7/1.4)(5')$	$= 0.13$

Pier Analysis (CONT.)

Stream Flow (CONT.)

Equivalant Concentrated Loads from Stream Force on Pier:

$P_1 = (4.65 + 4.25)(\frac{1}{2})(1.19')$	$= 5.30^k$
$P_2 = (3.54 + 2.97)(\frac{1}{2})(2')$	$= 6.51^k$
$P_3 = (2.97 + 2.41)(\frac{1}{2})(2')$	$= 5.38$
$P_4 = (2.41 + 1.84)(\frac{1}{2})(2')$	$= 4.25$
$P_5 = (1.84 + 1.27)(\frac{1}{2})(2')$	$= 3.11$
$P_6 = (1.27 + 0.48)(\frac{1}{2})(2.81')$	$= 2.46$
$P_7 = (0.13 + 0)(\frac{1}{2})(1.69')$	$= 0.11$
	$\Sigma = 27.12^k$

Resolve total forces into longitudinal and transverse directions and divide force on cap equally between each column:

Transverse Direction: $\cos 5° = 0.996$

Longitudinal Direction: $\sin 5° = 0.087$

$P_{1T} = 5.30^k(0.996)/3^{col.}$	$= 1.76^k$/shaft	$P_{1L} = 0.15^k$/shaft
$P_{2T} = 6.51(0.996)$	$= 6.48^k$	$P_{2L} = 0.57$
$P_{3T} = 5.38(0.996)$	$= 5.36^k$	$P_{3L} = 0.47$
$P_{4T} = 4.25(0.996)$	$= 4.23$	$P_{4L} = 0.37$
$P_{5T} = 3.11(0.996)$	$= 3.10$	$P_{5L} = 0.27$
$P_{6T} = 2.46(0.996)$	$= 2.45$	$P_{6L} = 0.21$
$P_{7T} = 0.11(0.996)$	$= 0.11$	$P_{7L} = 0.01$

Pier Analysis (CONT.)

Stream Flow (CONT.)

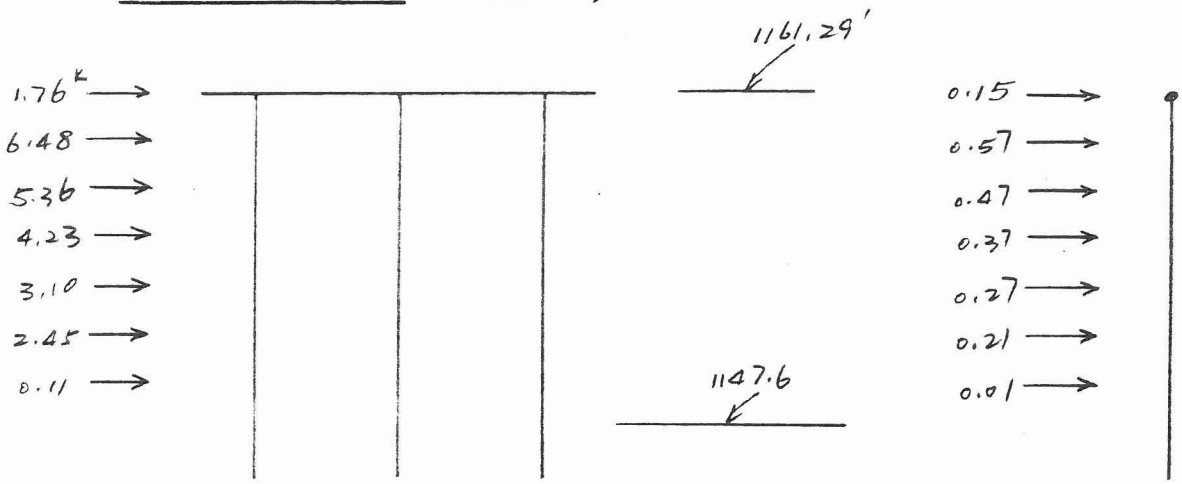

Transverse Model
(Loads per Shaft)

Longitudinal Model
(Loads per shaft)

See Computer Analysis (sheet 19) for Computer Models AND RESULTS.

Results from Transverse Frame Analysis

Top of Column:

Mem. 31: $P_{DL} = 1056.67^K$, $P_{LL} = 139.88^K$, $P_{SF} = 0$
$M_{DL} = 0$, $M_{LL} = 59.74'^{-K}$, $M_{SF} = 452.86'^{-K}$

Mem. 57: $P_{DL} = 995.67^K$, $P_{LL} = 145.4^K$, $P_{SF} = 21.81^K$
$M_{DL} = 15.43'^{-K}$, $M_{LL} = 5.88'^{-K}$, $M_{SF} = 384.21'^{-K}$

Bott. of Shaft: (Point of Max. Moment)

Mem. 40: $P_{DL} = 1216.25^K$, $P_{LL} = 139.88^K$, $P_{SF} = 0$
$M_{DL} = 0$, $M_{LL} = 28.75'^{-K}$, $M_{SF} = 498.36'^{-K}$

Mem. 66: $P_{DL} = 1155.26^K$, $P_{LL} = 145.4^K$, $P_{SF} = 21.81^K$
$M_{DL} = 4.37'^{-K}$, $M_{LL} = 13.42'^{-K}$, $M_{SF} = 478.86'^{-K}$

Pier Analysis (CONT.)

Results from Longitudinal Fram Analysis (Cantilever)

Top of Col.: (Mem. 1)

$P_{SF} = 0^{k}$, $M_{SF} = 0^{1-k}$

Bott. of shaft: (Point of Max. Moment. Mem. 9)

$P_{SF} = 0^{k}$, $M_{SF} = 75.15^{1-k}$

Check shaft Capacity Based on Strength of Soil

$P_{TL} = 1216.25 + 139.88 = 1356.13^{k}$ (Mem. 40 controls)

Shaft Tip Elevation: 1080'.

Ultimate Shaft Capacity = 3850^{k} > 1356.13^{k} O.K. (see sht. 7, AGRA Chart)
(W/ safty factor = 1.0)

Embedment Depth Provided = 1080 - 1025 = 45'

Embedment Depth Required = 5', see sht. 7, AGRA Chart
< 45', O.K

Check Capacity Based on Strength of Column & Shaft

(Use AASHTO Group VII Loading + Live Load + Impact)

$$1.3[\cancel{\beta_D}^{\,1.0} D + \cancel{\beta_{L+I}}^{\,1.0} (L+I) + \cancel{\beta_E}^{\,0} E + 1.0\cancel{B}^{\,0} + 1.0SF]$$

$$I = \frac{50}{123+125} = 0.2$$

Pier Analysis (CONT.)

Check capacity Based on Strength of Col. & Shaft (CONT.)

Top of Column:

Mem. 31: $P_u = 1.3[(1056.67) + 1.2(1.0)(139.88) + 0] = 1592^k$

$M_{u.tr.} = 1.3[0 + 1.2(1.0)(59.74) + (452.86)] = 682'^{-k}$

$M_{u.long} = 1.3[0] = 0$

Mem. 57: $P_u = 1.3[(995.67) + (1.2)(1.0)(145.4) + 21.81] = 1550^k$

$M_{u.tr.} = 1.3[15.43 + 1.2(5.88) + 384.21] = 528.70'^{-k}$

$M_{u.long} = 1.3[0] = 0$

Bott. of Shaft: (Point of Max. Moment)

Mem. 40: $P_u = 1.3[(1216.25) + (1.2)(1.0)(139.88) + 0] = 1799^k$

$M_{u.tr.} = 1.3[0 + 1.2(1.0)(28.75) + 498.36] = 692.72'^{-k}$

$M_{u.long} = 1.3[75.15] = 97.7'^{-k}$

Mem. 66: $P_u = 1.3[1155.26 + (1.2)(1.0)(145.4) + 21.81] = 1757^k$

$M_{u.tr.} = 1.3[4.37 + (1.2)(1.0)(13.42) + 478.86] = 649.27'^{-k}$

$M_{u.long} = 1.3[75.15] = 97.7'^{-k}$

Column Slenderness

Transverse Direction: $K \approx 1.2$, $l = 35.3'$, $r = 0.25(5')(12'') = 15''$ (conservative)

$Kl/r = 33.89 > 22$, < 100

∴ Moment must be magnified.

Longitudinal Direction: $K \approx 2.1$, $22 < \frac{Kl}{r} = 59 < 100$

$$\delta_s = \frac{1}{1 - \frac{\Sigma P_u}{\phi \Sigma P_c}}, \quad P_c = \frac{\pi^2 EI}{(K l_u)^2} \quad \text{Use } I = 0.4 I_g$$

Pier Analysis (CONT.)

Column Slenderness (CONT.)

$$P_{c.col.tr.} = \frac{\pi^2(3605)(\overset{0.4I_g}{254340})}{(1.2\times35.3\times12)^2} = 35022^K$$

$$P_{c.col.long} = \frac{\pi^2(3605)(254340)}{(2.1\times35.3\times12)^2} = 11436^K$$

$$P_{c.shaft.tr.} = \frac{\pi^2(3605)(\overset{0.4I_g}{527399})}{(1.2\times35.3\times12)^2} = 72622^K$$

$$P_{c.shaft.long} = \frac{\pi^2(3605)(527399)}{(2.1\times35.3\times12)^2} = 23713^K$$

Column:

Mem. 31: $\delta_{s.tr.} = \dfrac{1}{1-\dfrac{1592}{0.7(35022)}} = 1.07$ $\qquad \delta_{s.long} = \dfrac{1}{1-\dfrac{1592}{0.7(11436)}} = 1.25$

Mem. 57: $\delta_{s.tr.} = \dfrac{1}{1-\dfrac{1550}{0.7(35022)}} = 1.07$ $\qquad \delta_{s.long} = \dfrac{1}{1-\dfrac{1550}{0.7(11436)}} = 1.24$

Shaft:

Mem. 40: $\delta_{s.tr.} = \dfrac{1}{1-\dfrac{1799}{0.7(72622)}} = 1.04$ $\qquad \delta_{s.long} = \dfrac{1}{1-\dfrac{1799}{0.7(23713)}} = 1.12$

Mem. 66: $\delta_{s.tr.} = \dfrac{1}{1-\dfrac{1757}{0.7(72622)}} = 1.04$ $\qquad \delta_{s.long} = \dfrac{1}{1-\dfrac{1757}{0.7(23713)}} = 1.12$

Pier Analysis (CONT.)

Max. Col. Loads

$f'_c = 4$ ksi, $f_y = 60$ ksi

Mem. 31: $P_u = 1592^k$

$M_{u,tr.} = 1.07(682) = 730^{'-k}$

$M_{u,long} = 0$

Mem. 57: $P_u = 1550^k$

$M_{u,tr.} = 1.07(528.70) = 566^{'-k}$

$M_{u,long} = 0$

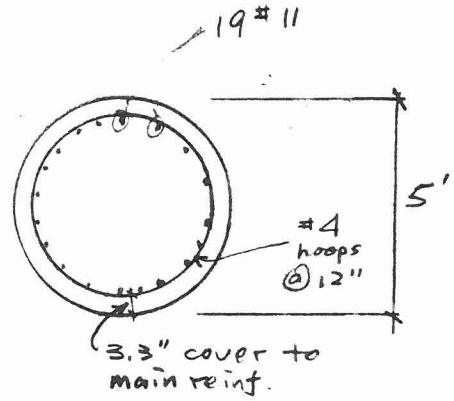

ULTIMATE STRENGTH DESIGN
OF
REINFORCED CONCRETE COLUMNS

```
CODER    :  HONG MEI
CHECKER  :
DATE     :   7- 2-96
JOB IDENTIFICATION :  BELL RD BRIDGE, PIER COL.
DATA USED
**** ****
ANALYSIS OF ROUND COLUMN - SIZE : DIAMETER =  60.00 IN.
STRESSES : FC'      = 4.000 K.S.I.  FC = 3.400 K.S.I.  FY      = 60.000 K.S.I.
           E-CONC. = 3605. K.S.I.                      E-STEEL = 29000. K.S.I.
           MAX. CONC. STRAIN (EU) =  .003
CAPACITY REDUCTION FACTORS :
COMPRESSION =  .70     FLEXURE =  .90
REINFORCEMENT DATA :          CIRCULAR REINFORCEMENT PATTERN

WITH- 19 NO. 11 BARS   AST= 29.64 SQ.IN. =  1.05PCT.   COVER= 3.30 IN.
BAR SPACING =  8.60 IN.
OUTPUT
******
```

LOAD CASE	APPLIED LOADS AP	AMX	AMY	COMPUTED STRENGTH UP	UMX	UMY	UP/AP
1	1592.	730.	0.	6015.	2756.	0.	3.778 } >1.0 O.K
2	1550.	566.	0.	6354.	2315.	0.	4.098 }

Pier Analysis (CONT.)

Max. shaft Loads $f'_c = 4$ ksi, $f_y = 60$ ksi

Mem. 40 · $P_u = 1799^k$

$M_{u.tr.} = 1.04(692.72) = 720^{1-k}$

$M_{u.long} = 1.12(97.7) = 109^{1-k}$

Mem. 66 : $P_u = 1757^k$

$M_{u.tr.} = 1.04(649.27) = 675^{1-k}$

$M_{u.long} = 1.12(97.7) = 109^{1-k}$

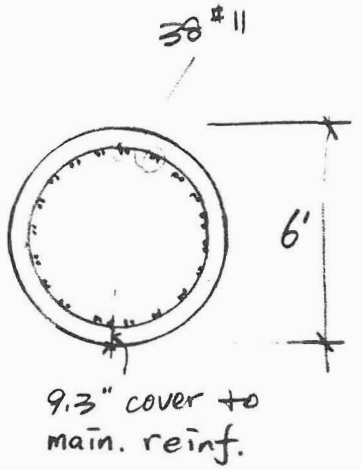

ULTIMATE STRENGTH DESIGN
OF
REINFORCED CONCRETE COLUMNS

```
CODER    :  HONG MEI
CHECKER  :
DATE     :   7- 2-96
JOB IDENTIFICATION :  BELL RD BRIDGE, PIER SHAFT
DATA USED
**** ****
ANALYSIS OF ROUND COLUMN - SIZE : DIAMETER =  72.00 IN.
STRESSES : FC'      = 4.000 K.S.I.  FC = 3.400 K.S.I.  FY       = 60.000 K.S.I
           E-CONC. = 3605. K.S.I.                      E-STEEL = 29000. K.S.I
           MAX. CONC. STRAIN (EU) =  .003
CAPACITY REDUCTION FACTORS :
COMPRESSION =  .70     FLEXURE =  .90
REINFORCEMENT DATA :          CIRCULAR REINFORCEMENT PATTERN

WITH- 38 NO. 11 BARS   AST= 59.28 SQ.IN. =  1.46PCT.   COVER= 9.30 IN.
BAR SPACING =  4.30 IN.
OUTPUT
******
```

LOAD CASE	APPLIED LOADS AP	AMX	AMY	COMPUTED STRENGTH UP	UMX	UMY	UP/AP
1	1799.	720.	109.	9704.	3886.	588.	5.394
2	1757.	675.	109.	9782.	3759.	607.	5.568

} > 1.0 O.K

Pier Analysis (cont.)

Summary of Results

The Piers Are Vertically and Laterally Stable For $Q_{Low\ chord}$ Stream Flow Conditions.

COMPUTER ANALYSIS

Computer Models

Transverse Pier Frame Model

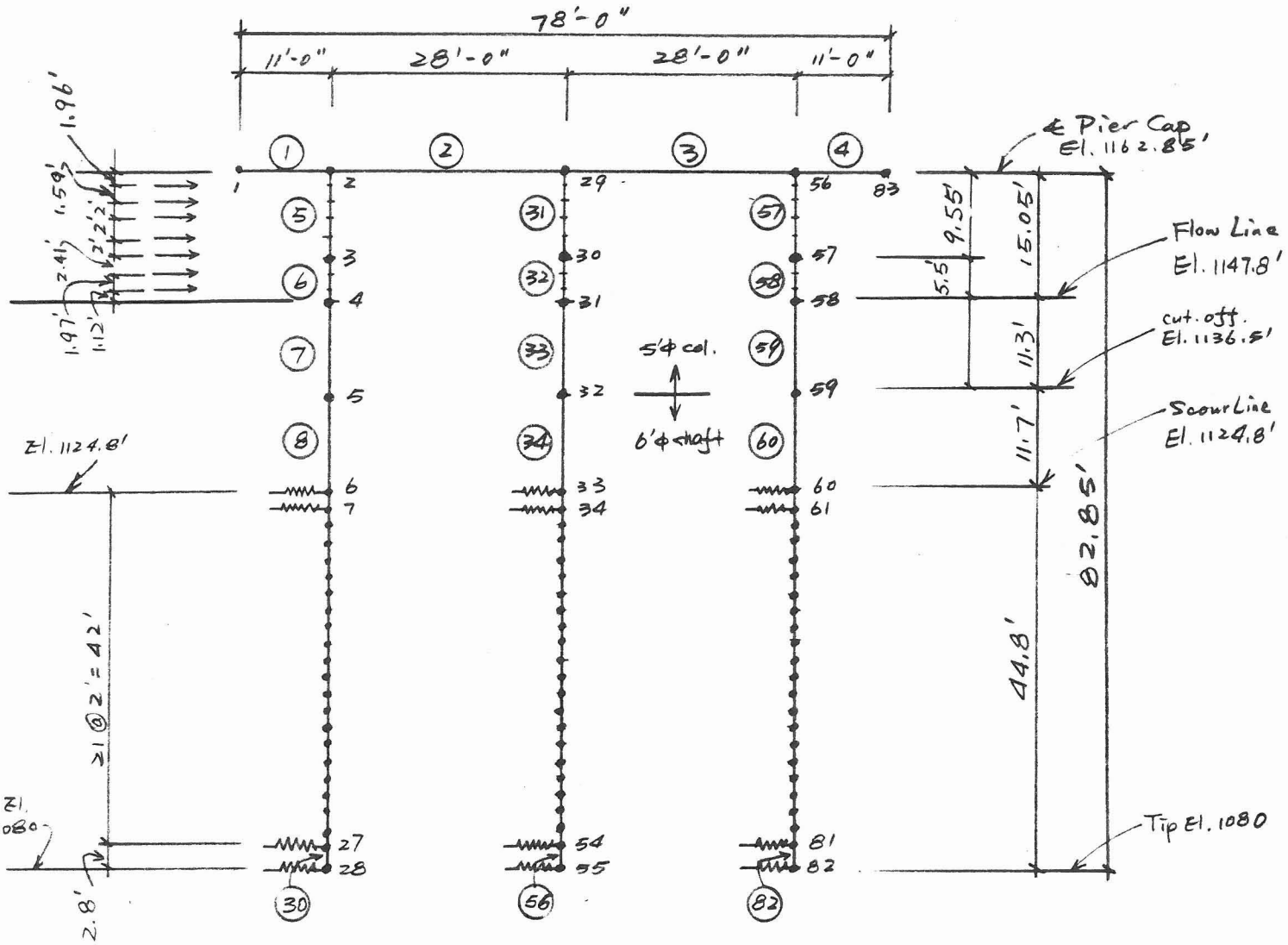

$I_{cap} = \frac{1}{12}(63)(66)^3 = 1509354\ in^4$, $A_{cap} = 63(66) = 4158$, $w = 0.361\ k/''$, $E_{cap} = 3605$ ksi

$I_{col.} = 1.0 I_g = [\frac{1}{64}(60)^4\pi] = 636172\ in^4$, $A = 2826\ in^2$, $w = 0.245\ k/''$, $E_{col} = 3605$ ksi

$I_{shaft} = 1.0\ I_g = [\frac{1}{64}(72)^4\pi] = 1319166\ in^2$, $A = 4069\ in^2$, $w = 0.353\ k/''$, $E_{shaft} = 3605$ ksi

($f'_c = 4000$ psi)

Note: Use $I = I_g$ for Column & Shaft Computer Analysis.

Computer Models

Longitudinal Pier Frame Model (cantilever)

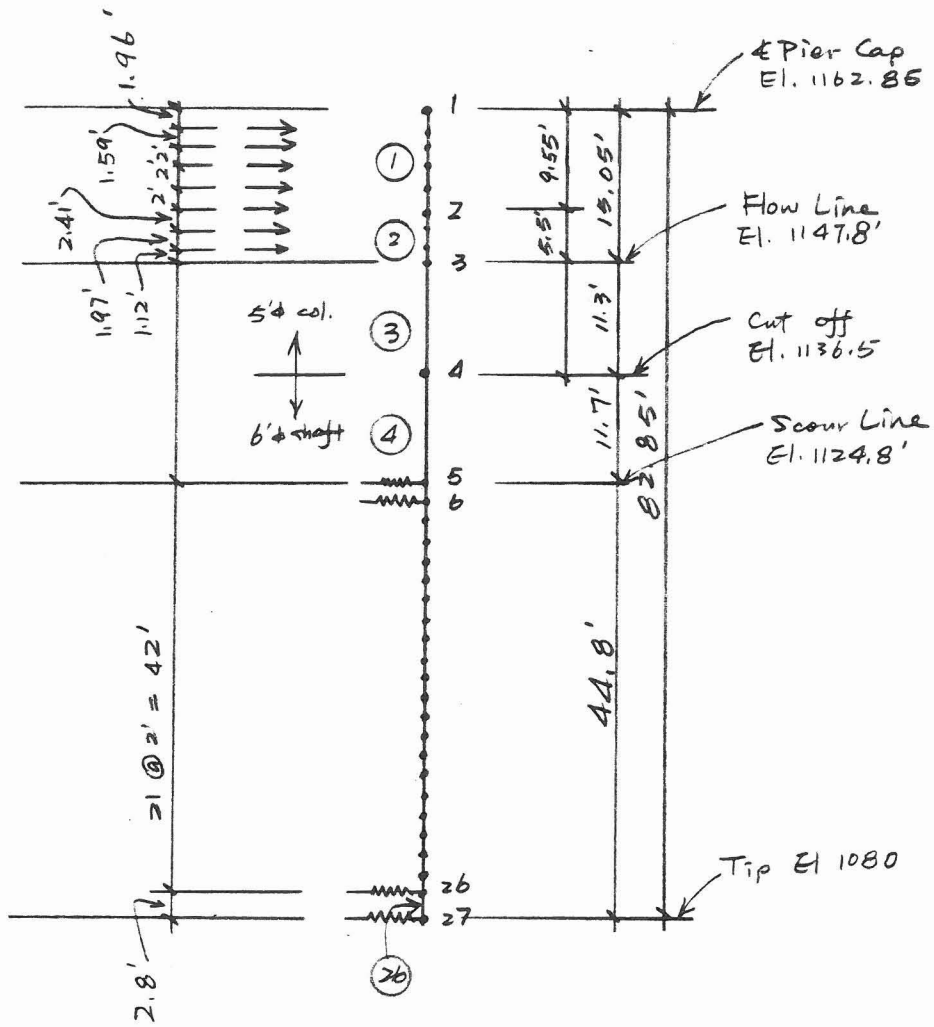

Cannon & Associates, Inc.
Consulting Engineers

project no. : 94046-1
project : Bell Rd. Bridge
designed by : HM
checked by : TB
date : 5/96 sht. 21 of 23

Computer Models

Spring Constants

Based on lateral subgrade modulus (K) provided by AGRA charts, (see sheet 23)

spring constants = (K)(shaft Φ)(Node Spacing)
= K (72")(24")

½" Deflection Curve

Depth below Scour Line (ft)	Subgrade Modulus (pci)	Spring Constant K/in
0	0	0
2	34.2	59.1 K/"
4	68.4	118.2
6	102.8	177.6
8	136.8	236.4
10	171.0	295.5
12	205.2	354.6
14	239.4	413.7
16	273.6	472.8
18	307.8	531.9
20	342.0	591.0
22	376.2	650.1
24	410.4	709.2
26	444.6	768.3
28	478.8	827.4
30	513.0	886.5
32	547.2	945.6
34	581.4	1004.7
36	615.6	1063.8
38	649.8	1122.9
40	684.0	1182.0
42	718.2	1489.3
45	769.5	930.8

Pier Analysis (CONT.)

Figure 12 - Bell Road
6-Foot Diameter

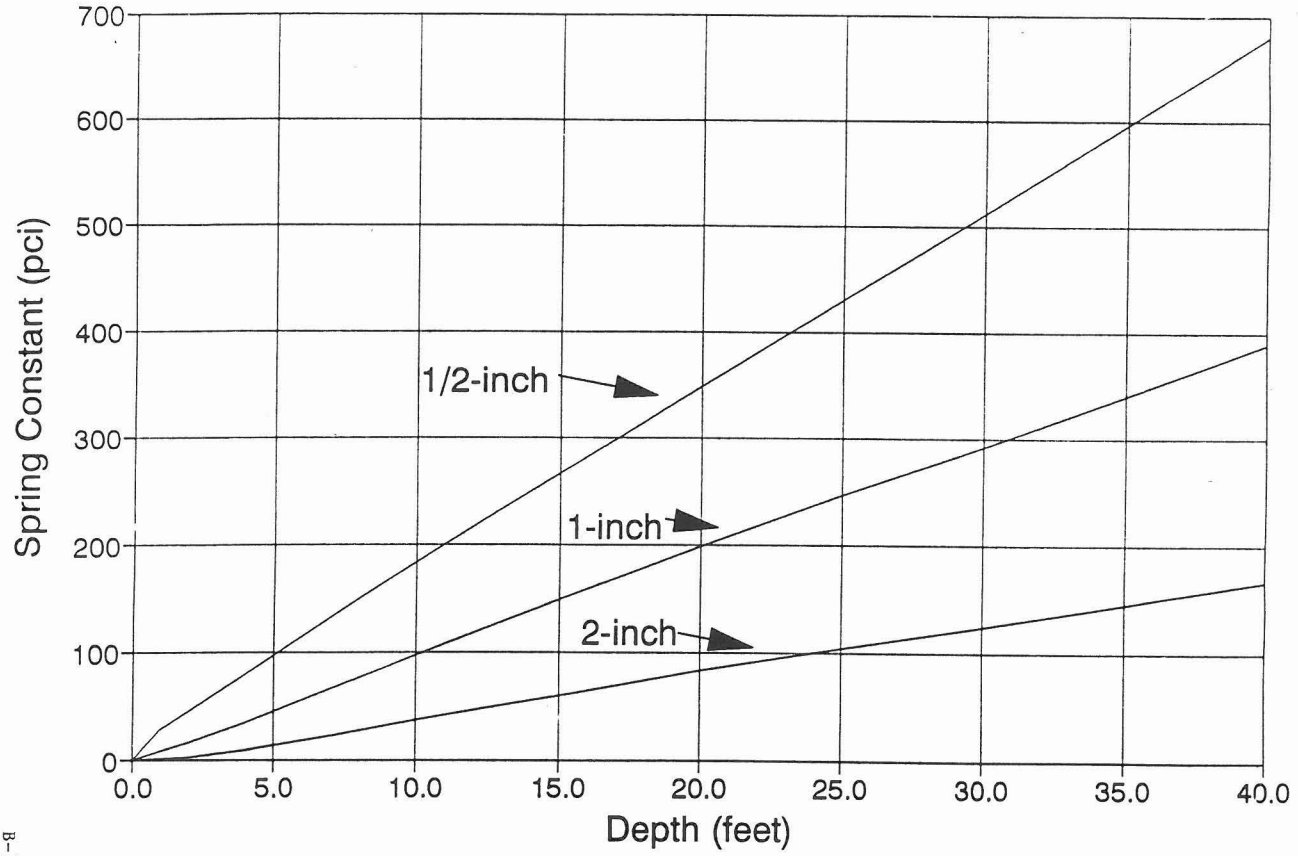

B-1

Reference: Geotechnical Investigation Report by AGRA Earth & Environmental, Inc., Job No. E 95-36, dated 4/15/96

Cannon & Associates, Inc.
Consulting Engineers

project no. : 94046-1
project : Bell Rd Bridge
designed by : HM
checked by : TB
date : 5/96 sht. 23 of 23

BELL ROAD BRIDGE AT AQUA FRIA RIVER, TRANS. FRAME, Q Low Chord FLOW

F R A M E E L E M E N T F O R C E S

ELT ID	LOAD COND	AXIAL FORCE	DIST END1	1-2 PLANE SHEAR	1-2 PLANE MOMENT	1-3 PLANE SHEAR	1-3 PLANE MOMENT	AXIAL TORQ
1								
	1	.00						
			.0	.00	.00			
			48.0	-17.33	-415.87			
			132.0	-381.15	-31159.03			
	2	.00						
			.0	.00	.00			
			132.0	.00	.00			
	3	.00						
			.0	.00	.00			
			132.0	.00	.00			
2								
	1	-.43						
			.0	600.48	-31344.16			
			36.0	587.49	-9960.74			
			156.0	210.67	17918.39			
			276.0	-166.15	579.12			
			336.0	-521.31	-30049.91			
	2	-2.41						
			.0	74.73	-1147.91			
			36.0	74.73	1542.28			
			156.0	34.95	5735.96			
			276.0	-39.66	976.43			
			336.0	-102.66	-5183.33			
	3	-.64						
			.0	-21.81	4610.50			
			336.0	-21.81	-2717.14			
3								
	1	-.43						
			.0	521.31	-30049.91			
			60.0	499.65	579.12			
			180.0	122.83	17918.39			
			300.0	-253.99	-9960.74			
			336.0	-600.48	-31344.16			
	2	-.45						
			.0	37.21	-4466.42			
			60.0	37.21	-2233.68			
			180.0	34.60	1918.62			
			300.0	-23.18	-862.69			
			336.0	-95.18	-4289.08			
	3	.64						
			.0	-21.81	2717.14			
			336.0	-21.81	-4610.50			
4								
	1	.00						
			.0	381.15	-31159.03			
			84.0	350.83	-415.87			
			132.0	.00	.00			
	2	.00						
			.0	50.22	-4218.48			
			84.0	50.22	.00			
			132.0	.00	.00			

BELL ROAD BRIDGE AT AQUA FRIA RIVER, TRANS. FRAME, Q Low Chord FLOW

F R A M E E L E M E N T F O R C E S

ELT ID	LOAD COND	AXIAL FORCE	DIST ENDI	1-2 PLANE SHEAR	1-2 PLANE MOMENT	1-3 PLANE SHEAR	1-3 PLANE MOMENT	AXIAL TORQ
	3	.00						
			.0	.00	.00			
			132.0	.00	.00			
5								
	1	-995.67						
			.0	-.43	185.13			
			114.6	-.43	135.36			
	2	-74.73						
			.0	-2.41	1147.91			
			114.6	-2.41	871.50			
	3	21.81						
			.0	-.64	-4610.50			
			23.5	-.64	-4625.66			
			42.6	1.12	-4604.38			
			66.6	7.60	-4422.09			
			90.6	12.96	-4111.16			
			114.6	17.19	-3698.71			
31								
	1	-1056.67						
			.0	.00	.00			
			114.6	.00	.00			
	2	-139.88						
			.0	1.96	-716.90			
			114.6	1.96	-491.72			
	3	.00						
			.0	1.29	-5434.28			
			23.5	1.29	-5403.96			
			42.6	3.05	-5345.78			
			66.6	9.53	-5117.08			
			90.6	14.89	-4759.74			
			114.6	19.12	-4300.88			
57								
	1	-995.67						
			.0	.43	-185.13			
			114.6	.43	-135.36			
	2	-145.40						
			.0	.45	-70.60			
			114.6	.45	-19.38			
	3	-21.81						
			.0	-.64	-4610.50			
			23.5	-.64	-4625.66			
			42.6	1.12	-4604.38			
			66.6	7.60	-4422.09			
			90.6	12.96	-4111.16			
			114.6	17.19	-3698.71			
6								
	1	-1017.80						
			.0	-.43	135.36			
			66.0	-.43	106.69			
	2	-74.73						
			.0	-2.41	871.50			
			66.0	-2.41	712.32			

BELL ROAD BRIDGE AT AQUA FRIA RIVER, TRANS. FRAME, Q Low Chord FLOW

F R A M E E L E M E N T F O R C E S

ELT ID	LOAD COND	AXIAL FORCE	DIST ENDI	1-2 PLANE SHEAR	1-2 PLANE MOMENT	1-3 PLANE SHEAR	1-3 PLANE MOMENT	AXIAL TORQ
	3	21.81						
			.0	20.29	-3698.71			
			28.9	20.29	-3112.06			
			52.6	22.74	-2574.60			
			66.0	22.85	-2267.55			
32								
	1	-1078.79						
			.0	.00	.00			
			66.0	.00	.00			
	2	-139.88						
			.0	1.96	-491.72			
			66.0	1.96	-362.03			
	3	.00						
			.0	22.22	-4300.88			
			28.9	22.22	-3658.30			
			52.6	24.67	-3075.12			
			66.0	24.78	-2742.08			
58								
	1	-1017.80						
			.0	.43	-135.36			
			66.0	.43	-106.69			
	2	-145.40						
			.0	.45	-19.38			
			66.0	.45	10.12			
	3	-21.81						
			.0	20.29	-3698.71			
			28.9	20.29	-3112.06			
			52.6	22.74	-2574.60			
			66.0	22.85	-2267.55			
	1	-1042.49						
			.0	-.43	106.69			
			135.6	-.43	47.79			
	2	-74.73						
			.0	-2.41	712.32			
			135.6	-2.41	385.26			
	3	21.81						
			.0	22.85	-2267.55			
			135.6	22.85	830.28			
33								
	1	-1103.49						
			.0	.00	.00			
			135.6	.00	.00			
	2	-139.88						
			.0	1.96	-362.03			
			135.6	1.96	-95.59			
	3	.00						
			.0	24.78	-2742.08			
			135.6	24.78	617.98			
59								
	1	-1042.49						
			.0	.43	-106.69			

BELL ROAD BRIDGE AT AQUA FRIA RIVER, TRANS. FRAME, Q Low Chord FLOW

F R A M E E L E M E N T F O R C E S

ELT ID	LOAD COND	AXIAL FORCE	DIST ENDI	1-2 PLANE SHEAR	1-2 PLANE MOMENT	1-3 PLANE SHEAR	1-3 PLANE MOMENT	AXIAL TORQ
			135.6	.43	-47.79			
	2	-145.40						
			.0	.45	10.12			
			135.6	.45	70.72			
	3	-21.81						
			.0	22.85	-2267.55			
			135.6	22.85	830.28			
8								
	1	-1083.88						
			.0	-.43	47.79			
			140.4	-.43	-13.19			
	2	-74.73						
			.0	-2.41	385.26			
			140.4	-2.41	46.63			
	3	21.81						
			.0	22.85	830.28			
			140.4	22.85	4037.77			
34								
	1	-1144.88						
			.0	.00	.00			
			140.4	.00	.00			
	2	-139.88						
			.0	1.96	-95.59			
			140.4	1.96	180.29			
	3	.00						
			.0	24.78	617.98			
			140.4	24.78	4096.98			
60								
	1	-1083.88						
			.0	.43	-47.79			
			140.4	.43	13.19			
	2	-145.40						
			.0	.45	70.72			
			140.4	.45	133.48			
	3	-21.81						
			.0	22.85	830.28			
			140.4	22.85	4037.77			
9								
	1	-1112.90						
			.0	-.43	-13.19			
			24.0	-.43	-23.62			
	2	-74.73						
			.0	-2.41	46.63			
			24.0	-2.41	-11.25			
	3	21.81						
			.0	22.85	4037.77			
			24.0	22.85	4586.06			
10								
	1	-1121.37						
			.0	-.40	-23.62			
			24.0	-.40	-33.24			
	2	-74.73						

BELL ROAD BRIDGE AT AQUA FRIA RIVER, TRANS. FRAME, @ Low Chord FLOW

F R A M E E L E M E N T F O R C E S

ELT ID	LOAD COND	AXIAL FORCE	DIST END1	1-2 PLANE SHEAR	1-2 PLANE MOMENT	1-3 PLANE SHEAR	1-3 PLANE MOMENT	AXIAL TORQ
			.0	-2.26	-11.25			
			24.0	-2.26	-65.56			
	3	21.81						
			.0	20.06	4586.06			
			24.0	20.06	5067.50			
11								
	1	-1129.84						
			.0	-.34	-33.24			
			24.0	-.34	-41.48			
	2	-74.73						
			.0	-2.00	-65.56			
			24.0	-2.00	-113.60			
	3	21.81						
			.0	15.38	5067.50			
			24.0	15.38	5436.60			
12								
	1	-1138.32						
			.0	-.27	-41.48			
			24.0	-.27	-47.95			
	2	-74.73						
			.0	-1.66	-113.60			
			24.0	-1.66	-153.52			
	3	21.81						
			.0	9.57	5436.60			
			24.0	9.57	5666.39			
13								
	1	-1146.79						
			.0	-.19	-47.95			
			24.0	-.19	-52.47			
	2	-74.73						
			.0	-1.28	-153.52			
			24.0	-1.28	-184.25			
	3	21.81						
			.0	3.33	5666.39			
			24.0	3.33	5746.30			
14								
	1	-1155.26						
			.0	-.11	-52.47			
			24.0	-.11	-54.99			
	2	-74.73						
			.0	-.88	-184.25			
			24.0	-.88	-205.44			
	3	21.81						
			.0	-2.83	5746.30			
			24.0	-2.83	5678.43			
15								
	1	-1163.73						
			.0	-.03	-54.99			
			24.0	-.03	-55.60			
	2	-74.73						
			.0	-.49	-205.44			
			24.0	-.49	-217.29			

BELL ROAD BRIDGE AT AQUA FRIA RIVER, TRANS. FRAME, @ Low Chord FLOW

F R A M E E L E M E N T F O R C E S

ELT ID	LOAD COND	AXIAL FORCE	DIST END1	1-2 PLANE SHEAR	1-2 PLANE MOMENT	1-3 PLANE SHEAR	1-3 PLANE MOMENT	AXIAL TORQ
	3	21.81						
			.0	-8.48	5678.43			
			24.0	-8.48	5474.80			
16								
	1	-1172.20						
			.0	.05	-55.60			
			24.0	.05	-54.49			
	2	-74.73						
			.0	-.13	-217.29			
			24.0	-.13	-220.48			
	3	21.81						
			.0	-13.34	5474.80			
			24.0	-13.34	5154.54			
17								
	1	-1180.68						
			.0	.11	-54.49			
			24.0	.11	-51.89			
	2	-74.73						
			.0	.19	-220.48			
			24.0	.19	-216.01			
	3	21.81						
			.0	-17.22	5154.54			
			24.0	-17.22	4741.14			
18								
	1	-1189.15						
			.0	.16	-51.89			
			24.0	.16	-48.11			
	2	-74.73						
			.0	.45	-216.01			
			24.0	.45	-205.11			
	3	21.81						
			.0	-20.04	4741.14			
			24.0	-20.04	4260.24			
19								
	1	-1197.62						
			.0	.19	-48.11			
			24.0	.19	-43.44			
	2	-74.73						
			.0	.67	-205.11			
			24.0	.67	-189.14			
	3	21.81						
			.0	-21.78	4260.24			
			24.0	-21.78	3737.62			
20								
	1	-1206.09						
			.0	.22	-43.44			
			24.0	.22	-38.20			
	2	-74.73						
			.0	.82	-189.14			
			24.0	.82	-169.47			
	3	21.81						
			.0	-22.50	3737.62			

BELL ROAD BRIDGE AT AQUA FRIA RIVER, TRANS. FRAME, Q Low Chord FLOW

F R A M E E L E M E N T F O R C E S

ELT ID	LOAD COND	AXIAL FORCE	DIST END1	1-2 PLANE SHEAR	1-2 PLANE MOMENT	1-3 PLANE SHEAR	1-3 PLANE MOMENT	AXIAL TORQ
			24.0	-22.50	3197.66			
21								
	1	-1214.56						
			.0	.23	-38.20			
			24.0	.23	-32.65			
	2	-74.73						
			.0	.92	-169.47			
			24.0	.92	-147.44			
	3	21.81						
			.0	-22.31	3197.66			
			24.0	-22.31	2662.27			
22								
	1	-1223.04						
			.0	.23	-32.65			
			24.0	.23	-27.07			
	2	-74.73						
			.0	.97	-147.44			
			24.0	.97	-124.28			
	3	21.81						
			.0	-21.34	2662.27			
			24.0	-21.34	2150.10			
23								
	1	-1231.51						
			.0	.23	-27.07			
			24.0	.23	-21.67			
	2	-74.73						
			.0	.97	-124.28			
			24.0	.97	-101.08			
	3	21.81						
			.0	-19.75	2150.10			
			24.0	-19.75	1676.19			
24								
	1	-1239.98						
			.0	.21	-21.67			
			24.0	.21	-16.63			
	2	-74.73						
			.0	.93	-101.08			
			24.0	.93	-78.80			
	3	21.81						
			.0	-17.68	1676.19			
			24.0	-17.68	1251.97			
25								
	1	-1248.45						
			.0	.19	-16.63			
			24.0	.19	-12.10			
	2	-74.73						
			.0	.86	-78.80			
			24.0	.86	-58.23			
	3	21.81						
			.0	-15.28	1251.97			
			24.0	-15.28	885.33			

BELL ROAD BRIDGE AT AQUA FRIA RIVER, TRANS. FRAME, Q Low Chord FLOW

F R A M E E L E M E N T F O R C E S

ELT ID	LOAD COND	AXIAL FORCE	DIST END1	1-2 PLANE SHEAR	1-2 PLANE MOMENT	1-3 PLANE SHEAR	1-3 PLANE MOMENT	AXIAL TORQ
26								
	1	-1256.92						
			.0	.16	-12.10			
			24.0	.16	-8.18			
	2	-74.73						
			.0	.76	-58.23			
			24.0	.76	-40.02			
	3	21.81						
			.0	-12.68	885.33			
			24.0	-12.68	581.10			
27								
	1	-1265.40						
			.0	.13	-8.18			
			24.0	.13	-4.97			
	2	-74.73						
			.0	.64	-40.02			
			24.0	.64	-24.71			
	3	21.81						
			.0	-9.99	581.10			
			24.0	-9.99	341.46			
28								
	1	-1273.87						
			.0	.10	-4.97			
			24.0	.10	-2.52			
	2	-74.73						
			.0	.50	-24.71			
			24.0	.50	-12.76			
	3	21.81						
			.0	-7.29	341.46			
			24.0	-7.29	166.50			
29								
	1	-1282.34						
			.0	.07	-2.52			
			24.0	.07	-.88			
	2	-74.73						
			.0	.34	-12.76			
			24.0	.34	-4.56			
	3	21.81						
			.0	-4.66	166.50			
			24.0	-4.66	54.72			
30								
	1	-1292.51						
			.0	.03	-.88			
			33.6	.03	.00			
	2	-74.73						
			.0	.14	-4.56			
			33.6	.14	.00			
	3	21.81						
			.0	-1.63	54.72			
			33.6	-1.63	.00			
56								
	1	-1353.50						

BELL ROAD BRIDGE AT AQUA FRIA RIVER, TRANS. FRAME, Q Low Chord FLOW

F R A M E E L E M E N T F O R C E S

ELT ID	LOAD COND	AXIAL FORCE	DIST ENDI	1-2 PLANE SHEAR	1-2 PLANE MOMENT	1-3 PLANE SHEAR	1-3 PLANE MOMENT	AXIAL TORQ
			.0	.00	.00			
			33.6	.00	.00			
	2	-139.88						
			.0	-.13	4.28			
			33.6	-.13	.00			
	3	.00						
			.0	-1.74	58.63			
			33.6	-1.74	.00			
82								
	1	-1292.51						
			.0	-.03	.88			
			33.6	-.03	.00			
	2	-145.40						
			.0	-.04	1.21			
			33.6	-.04	.00			
	3	-21.81						
			.0	-1.63	54.72			
			33.6	-1.63	.00			
35								
	1	-1173.89						
			.0	.00	.00			
			24.0	.00	.00			
	2	-139.88						
			.0	1.96	180.29			
			24.0	1.96	227.45			
	3	.00						
			.0	24.78	4096.98			
			24.0	24.78	4691.68			
36								
	1	-1182.37						
			.0	.00	.00			
			24.0	.00	.00			
	2	-139.88						
			.0	1.78	227.45			
			24.0	1.78	270.09			
	3	.00						
			.0	21.84	4691.68			
			24.0	21.84	5215.95			
37								
	1	-1190.84						
			.0	.00	.00			
			24.0	.00	.00			
	2	-139.88						
			.0	1.46	270.09			
			24.0	1.46	305.04			
	3	.00						
			.0	16.91	5215.95			
			24.0	16.91	5621.72			
38								
	1	-1199.31						
			.0	.00	.00			
			24.0	.00	.00			

BELL ROAD BRIDGE AT AQUA FRIA RIVER, TRANS. FRAME, Q Low Chord FLOW

F R A M E E L E M E N T F O R C E S

ELT ID	LOAD COND	AXIAL FORCE	DIST ENDI	1-2 PLANE SHEAR	1-2 PLANE MOMENT	1-3 PLANE SHEAR	1-3 PLANE MOMENT	AXIAL TORQ
	2	-139.88						
			.0	1.05	305.04			
			24.0	1.05	330.33			
	3	.00						
			.0	10.77	5621.72			
			24.0	10.77	5880.31			
39								
	1	-1207.78						
			.0	.00	.00			
			24.0	.00	.00			
	2	-139.88						
			.0	.61	330.33			
			24.0	.61	345.08			
	3	.00						
			.0	4.17	5880.31			
			24.0	4.17	5980.31			
40								
	1	-1216.25						
			.0	.00	.00			
			24.0	.00	.00			
	2	-139.88						
			.0	.17	345.08			
			24.0	.17	349.26			
	3	.00						
			.0	-2.36	5980.31			
			24.0	-2.36	5923.63			
41								
	1	-1224.73						
			.0	.00	.00			
			24.0	.00	.00			
	2	-139.88						
			.0	-.24	349.26			
			24.0	-.24	343.52			
	3	.00						
			.0	-8.37	5923.63			
			24.0	-8.37	5722.70			
42								
	1	-1233.20						
			.0	.00	.00			
			24.0	.00	.00			
	2	-139.88						
			.0	-.60	343.52			
			24.0	-.60	329.04			
	3	.00						
			.0	-13.55	5722.70			
			24.0	-13.55	5397.43			
43								
	1	-1241.67						
			.0	.00	.00			
			24.0	.00	.00			
	2	-139.88						
			.0	-.91	329.04			

BELL ROAD BRIDGE AT AQUA FRIA RIVER, TRANS. FRAME, Q Low Chord FLOW

F R A M E E L E M E N T F O R C E S

ELT ID	LOAD COND	AXIAL FORCE	DIST ENDI	1-2 PLANE SHEAR	1-2 PLANE MOMENT	1-3 PLANE SHEAR	1-3 PLANE MOMENT	AXIAL TORQ
			24.0	-.91	307.31			
	3	.00						
			.0	-17.71	5397.43			
			24.0	-17.71	4972.45			
44								
	1	-1250.14						
			.0	.00	.00			
			24.0	.00	.00			
	2	-139.88						
			.0	-1.14	307.31			
			24.0	-1.14	280.03			
	3	.00						
			.0	-20.74	4972.45			
			24.0	-20.74	4474.67			
45								
	1	-1258.61						
			.0	.00	.00			
			24.0	.00	.00			
	2	-139.88						
			.0	-1.30	280.03			
			24.0	-1.30	248.92			
	3	.00						
			.0	-22.64	4474.67			
			24.0	-22.64	3931.23			
46								
	1	-1267.09						
			.0	.00	.00			
			24.0	.00	.00			
	2	-139.88						
			.0	-1.39	248.92			
			24.0	-1.39	215.67			
	3	.00						
			.0	-23.47	3931.23			
			24.0	-23.47	3367.88			
47								
	1	-1275.56						
			.0	.00	.00			
			24.0	.00	.00			
	2	-139.88						
			.0	-1.41	215.67			
			24.0	-1.41	181.80			
	3	.00						
			.0	-23.34	3367.88			
			24.0	-23.34	2807.78			
48								
	1	-1284.03						
			.0	.00	.00			
			24.0	.00	.00			
	2	-139.88						
			.0	-1.38	181.80			
			24.0	-1.38	148.66			
	3	.00						

BELL ROAD BRIDGE AT AGUA FRIA RIVER, TRANS. FRAME, Q Low Chord FLOW

F R A M E E L E M E N T F O R C E S

ELT ID	LOAD COND	AXIAL FORCE	DIST END1	1-2 PLANE SHEAR	1-2 PLANE MOMENT	1-3 PLANE SHEAR	1-3 PLANE MOMENT	AXIAL TORQ
			.0	-22.38	2807.78			
			24.0	-22.38	2270.72			
49								
	1	-1292.50						
			.0	.00	.00			
			24.0	.00	.00			
	2	-139.88						
			.0	-1.30	148.66			
			24.0	-1.30	117.38			
	3	.00						
			.0	-20.75	2270.72			
			24.0	-20.75	1772.74			
50								
	1	-1300.97						
			.0	.00	.00			
			24.0	.00	.00			
	2	-139.88						
			.0	-1.19	117.38			
			24.0	-1.19	88.84			
	3	.00						
			.0	-18.61	1772.74			
			24.0	-18.61	1326.05			
51								
	1	-1309.45						
			.0	.00	.00			
			24.0	.00	.00			
	2	-139.88						
			.0	-1.05	88.84			
			24.0	-1.05	63.70			
	3	.00						
			.0	-16.12	1326.05			
			24.0	-16.12	939.21			
52								
	1	-1317.92						
			.0	.00	.00			
			24.0	.00	.00			
	2	-139.88						
			.0	-.89	63.70			
			24.0	-.89	42.45			
	3	.00						
			.0	-13.40	939.21			
			24.0	-13.40	617.54			
53								
	1	-1326.39						
			.0	.00	.00			
			24.0	.00	.00			
	2	-139.88						
			.0	-.71	42.45			
			24.0	-.71	25.37			
	3	.00						
			.0	-10.58	617.54			
			24.0	-10.58	363.59			

BELL ROAD BRIDGE AT AQUA FRIA RIVER, TRANS. FRAME, Q Low Chord FLOW

F R A M E E L E M E N T F O R C E S

ELT ID	LOAD COND	AXIAL FORCE	DIST END1	1-2 PLANE SHEAR	1-2 PLANE MOMENT	1-3 PLANE SHEAR	1-3 PLANE MOMENT	AXIAL TORQ
54								
	1	-1334.86						
			.0	.00	.00			
			24.0	.00	.00			
	2	-139.88						
			.0	-.53	25.37			
			24.0	-.53	12.62			
	3	.00						
			.0	-7.74	363.59			
			24.0	-7.74	177.71			
55								
	1	-1343.33						
			.0	.00	.00			
			24.0	.00	.00			
	2	-139.88						
			.0	-.35	12.62			
			24.0	-.35	4.28			
	3	.00						
			.0	-4.96	177.71			
			24.0	-4.96	58.63			
61								
	1	-1112.90						
			.0	.43	13.19			
			24.0	.43	23.62			
	2	-145.40						
			.0	.45	133.48			
			24.0	.45	144.20			
	3	-21.81						
			.0	22.85	4037.77			
			24.0	22.85	4586.06			
62								
	1	-1121.37						
			.0	.40	23.62			
			24.0	.40	33.24			
	2	-145.40						
			.0	.38	144.20			
			24.0	.38	153.22			
	3	-21.81						
			.0	20.06	4586.06			
			24.0	20.06	5067.50			
63								
	1	-1129.84						
			.0	.34	33.24			
			24.0	.34	41.48			
	2	-145.40						
			.0	.26	153.22			
			24.0	.26	159.40			
	3	-21.81						
			.0	15.38	5067.50			
			24.0	15.38	5436.60			
64								
	1	-1138.32						

BELL ROAD BRIDGE AT AQUA FRIA RIVER, TRANS. FRAME, Q Low Chord FLOW

F R A M E E L E M E N T F O R C E S

ELT ID	LOAD COND	AXIAL FORCE	DIST END1	1-2 PLANE SHEAR	1-2 PLANE MOMENT	1-3 PLANE SHEAR	1-3 PLANE MOMENT	AXIAL TORQ
			.0	.27	41.48			
			24.0	.27	47.95			
	2	-145.40						
			.0	.11	159.40			
			24.0	.11	162.09			
	3	-21.81						
			.0	9.57	5436.60			
			24.0	9.57	5666.39			
65								
	1	-1146.79						
			.0	.19	47.95			
			24.0	.19	52.47			
	2	-145.40						
			.0	-.04	162.09			
			24.0	-.04	161.08			
	3	-21.81						
			.0	3.33	5666.39			
			24.0	3.33	5746.30			
66								
	1	-1155.26						
			.0	.11	52.47			
			24.0	.11	54.99			
	2	-145.40						
			.0	-.19	161.08			
			24.0	-.19	156.49			
	3	-21.81						
			.0	-2.83	5746.30			
			24.0	-2.83	5678.43			
67								
	1	-1163.73						
			.0	.03	54.99			
			24.0	.03	55.60			
	2	-145.40						
			.0	-.33	156.49			
			24.0	-.33	148.66			
	3	-21.81						
			.0	-8.48	5678.43			
			24.0	-8.48	5474.80			
68								
	1	-1172.20						
			.0	-.05	55.60			
			24.0	-.05	54.49			
	2	-145.40						
			.0	-.44	148.66			
			24.0	-.44	138.14			
	3	-21.81						
			.0	-13.34	5474.80			
			24.0	-13.34	5154.54			
69								
	1	-1180.68						
			.0	-.11	54.49			
			24.0	-.11	51.89			

BELL ROAD BRIDGE AT AQUA FRIA RIVER, TRANS. FRAME, Q Low Chord FLOW

F R A M E E L E M E N T F O R C E S

ELT ID	LOAD COND	AXIAL FORCE	DIST ENDI	1-2 PLANE SHEAR	1-2 PLANE MOMENT	1-3 PLANE SHEAR	1-3 PLANE MOMENT	AXIAL TORQ
	2	-145.40						
			.0	-.53	138.14			
			24.0	-.53	125.54			
	3	-21.81						
			.0	-17.22	5154.54			
			24.0	-17.22	4741.14			
70								
	1	-1189.15						
			.0	-.16	51.89			
			24.0	-.16	48.11			
	2	-145.40						
			.0	-.58	125.54			
			24.0	-.58	111.53			
	3	-21.81						
			.0	-20.04	4741.14			
			24.0	-20.04	4260.24			
71								
	1	-1197.62						
			.0	-.19	48.11			
			24.0	-.19	43.44			
	2	-145.40						
			.0	-.61	111.53			
			24.0	-.61	96.79			
	3	-21.81						
			.0	-21.78	4260.24			
			24.0	-21.78	3737.62			
72								
	1	-1206.09						
			.0	-.22	43.44			
			24.0	-.22	38.20			
	2	-145.40						
			.0	-.62	96.79			
			24.0	-.62	81.93			
	3	-21.81						
			.0	-22.50	3737.62			
			24.0	-22.50	3197.66			
73								
	1	-1214.56						
			.0	-.23	38.20			
			24.0	-.23	32.65			
	2	-145.40						
			.0	-.60	81.93			
			24.0	-.60	67.48			
	3	-21.81						
			.0	-22.31	3197.66			
			24.0	-22.31	2662.27			
74								
	1	-1223.04						
			.0	-.23	32.65			
			24.0	-.23	27.07			
	2	-145.40						
			.0	-.57	67.48			

BELL ROAD BRIDGE AT AQUA FRIA RIVER, TRANS. FRAME, Q Low Chord FLOW

F R A M E E L E M E N T F O R C E S

ELT ID	LOAD COND	AXIAL FORCE	DIST ENDI	1-2 PLANE SHEAR	1-2 PLANE MOMENT	1-3 PLANE SHEAR	1-3 PLANE MOMENT	AXIAL TORQ
			24.0	-.57	53.90			
	3	-21.81						
			.0	-21.34	2662.27			
			24.0	-21.34	2150.10			
75								
	1	-1231.51						
			.0	-.23	27.07			
			24.0	-.23	21.67			
	2	-145.40						
			.0	-.52	53.90			
			24.0	-.52	41.53			
	3	-21.81						
			.0	-19.75	2150.10			
			24.0	-19.75	1676.19			
76								
	1	-1239.98						
			.0	-.21	21.67			
			24.0	-.21	16.63			
	2	-145.40						
			.0	-.45	41.53			
			24.0	-.45	30.64			
	3	-21.81						
			.0	-17.68	1676.19			
			24.0	-17.68	1251.97			
77								
	1	-1248.45						
			.0	-.19	16.63			
			24.0	-.19	12.10			
	2	-145.40						
			.0	-.39	30.64			
			24.0	-.39	21.38			
	3	-21.81						
			.0	-15.28	1251.97			
			24.0	-15.28	885.33			
78								
	1	-1256.92						
			.0	-.16	12.10			
			24.0	-.16	8.18			
	2	-145.40						
			.0	-.31	21.38			
			24.0	-.31	13.83			
	3	-21.81						
			.0	-12.68	885.33			
			24.0	-12.68	581.10			
79								
	1	-1265.40						
			.0	-.13	8.18			
			24.0	-.13	4.97			
	2	-145.40						
			.0	-.24	13.83			
			24.0	-.24	7.99			
	3	-21.81						

BELL ROAD BRIDGE AT AQUA FRIA RIVER, TRANS. FRAME, Q Low Chord FLOW

F R A M E E L E M E N T F O R C E S

ELT ID	LOAD COND	AXIAL FORCE	DIST END1	1-2 PLANE SHEAR	1-2 PLANE MOMENT	1-3 PLANE SHEAR	1-3 PLANE MOMENT	AXIAL TORQ
			.0	-9.99	581.10			
			24.0	-9.99	341.46			
80								
	1	-1273.87						
			.0	-.10	4.97			
			24.0	-.10	2.52			
	2	-145.40						
			.0	-.17	7.99			
			24.0	-.17	3.81			
	3	-21.81						
			.0	-7.29	341.46			
			24.0	-7.29	166.50			
81								
	1	-1282.34						
			.0	-.07	2.52			
			24.0	-.07	.88			
	2	-145.40						
			.0	-.11	3.81			
			24.0	-.11	1.21			
	3	-21.81						
			.0	-4.66	166.50			
			24.0	-4.66	54.72			

BELL ROAD BRIDGE AT AQUA FRIA RIVER, LONG. FRAME, Q Low Chord FLOW

F R A M E E L E M E N T F O R C E S

ELT ID	LOAD COND	AXIAL FORCE	DIST ENDI	1-2 PLANE SHEAR	1-2 PLANE MOMENT	1-3 PLANE SHEAR	1-3 PLANE MOMENT	AXIAL TORQ
1								
	1	.00						
			.0	.00	.00			
			23.5	.00	.00			
			42.6	.15	2.86			
			66.6	.72	20.14			
			90.6	1.19	48.70			
			114.6	1.56	86.14			
2								
	1	.00						
			.0	1.83	86.14			
			28.9	1.83	139.07			
			52.6	2.04	187.29			
			66.0	2.05	214.84			
3								
	1	.00						
			.0	2.05	214.84			
			135.6	2.05	492.82			
4								
	1	.00						
			.0	2.05	492.82			
			140.4	2.05	780.64			
5								
	1	.00						
			.0	2.05	780.64			
			24.0	2.05	829.84			
6								
	1	.00						
			.0	1.67	829.84			
			24.0	1.67	869.96			
7								
	1	.00						
			.0	1.05	869.96			
			24.0	1.05	895.06			
8								
	1	.00						
			.0	.28	895.06			
			24.0	.28	901.83			
9								
	1	.00						
			.0	-.52	901.83			
			24.0	-.52	889.28			
10								
	1	.00						
			.0	-1.30	889.28			
			24.0	-1.30	858.11			
11								
	1	.00						
			.0	-1.99	858.11			
			24.0	-1.99	810.34			
12								
	1	.00						

BELL ROAD BRIDGE AT AQUA FRIA RIVER, LONG. FRAME, Q Low Chord FLOW

F R A M E E L E M E N T F O R C E S

ELT ID	LOAD COND	AXIAL FORCE	DIST END I	1-2 PLANE SHEAR	1-2 PLANE MOMENT	1-3 PLANE SHEAR	1-3 PLANE MOMENT	AXIAL TORQ
			.0	-2.56	810.34			
			24.0	-2.56	748.87			
13								
	1	.00						
			.0	-2.99	748.87			
			24.0	-2.99	677.13			
14								
	1	.00						
			.0	-3.27	677.13			
			24.0	-3.27	598.71			
15								
	1	.00						
			.0	-3.40	598.71			
			24.0	-3.40	517.13			
16								
	1	.00						
			.0	-3.40	517.13			
			24.0	-3.40	435.65			
17								
	1	.00						
			.0	-3.27	435.65			
			24.0	-3.27	357.09			
18								
	1	.00						
			.0	-3.05	357.09			
			24.0	-3.05	283.79			
19								
	1	.00						
			.0	-2.76	283.79			
			24.0	-2.76	217.53			
20								
	1	.00						
			.0	-2.42	217.53			
			24.0	-2.42	159.55			
21								
	1	.00						
			.0	-2.04	159.55			
			24.0	-2.04	110.62			
22								
	1	.00						
			.0	-1.65	110.62			
			24.0	-1.65	71.01			
23								
	1	.00						
			.0	-1.26	71.01			
			24.0	-1.26	40.67			
24								
	1	.00						
			.0	-.89	40.67			
			24.0	-.89	19.20			
25								
	1	.00						

BELL ROAD BRIDGE AT AQUA FRIA RIVER, LONG. FRAME, Q Low Chord FLOW

F R A M E E L E M E N T F O R C E S

ELT ID	LOAD COND	AXIAL FORCE	DIST ENDI	1-2 PLANE SHEAR	1-2 PLANE MOMENT	1-3 PLANE SHEAR	1-3 PLANE MOMENT	AXIAL TORQ
			.0	-.55	19.20			
			24.0	-.55	5.99			
26								
	1	.00						
			.0	-.18	5.99			
			33.6	-.18	.00			

STRUCTURAL CALCULATIONS

FOR

OLIVE AVENUE BRIDGE

AT

AQUA FRIA RIVER

Registered Professional Engineer (Structural)
CERTIFICATE NO.
14766
ROBERT DAVIS
TURTON
Date Signed 7/9/96
ARIZONA, U.S.A.

Cannon & Associates, Inc.
Consulting Engineers

project no. : CA 94046-1
project : OLIVE AVE. @ AGUA FRIA
designed by : TB
checked by : HM
date : 5/96 sht. 1 of 24

BASIS OF ANALYSIS

DESIGN SPECIFICATION

American Association of State Highway and Transportation Officials Standard Specifications for Highway Bridges, 1992 Edition, revised to date.

EXISTING BRIDGE PLANS

As-built bridge plan sheets 8 thru 32 dated May 11, 1987. Olive Avenue Bridge over Agua Fria River, Project No. 68274.

GEOTECHNICAL INVESTIGATION

Geotechnical Investigation Report by AGRA Earth & Environmental, Inc., Job No. E95-36, dated 4/15/96. Ultimate downward capacity of driven pile foundations were used with a safety factor of 1.0 under critical flow flood conditions.

HYDRAULIC DATA

Final Scour Analysis Report by Morrison-Maierle/CSSA, Inc. Dated March 1996.
Q_{500} = 179,900 cfs, Average Velocity = 11.4 ft/sec., Angle of Attack = 5 degrees
H.W. Elev. = 1081.76 (Bridge open to traffic)
Total Scour = 31'

PIER ANALYSIS

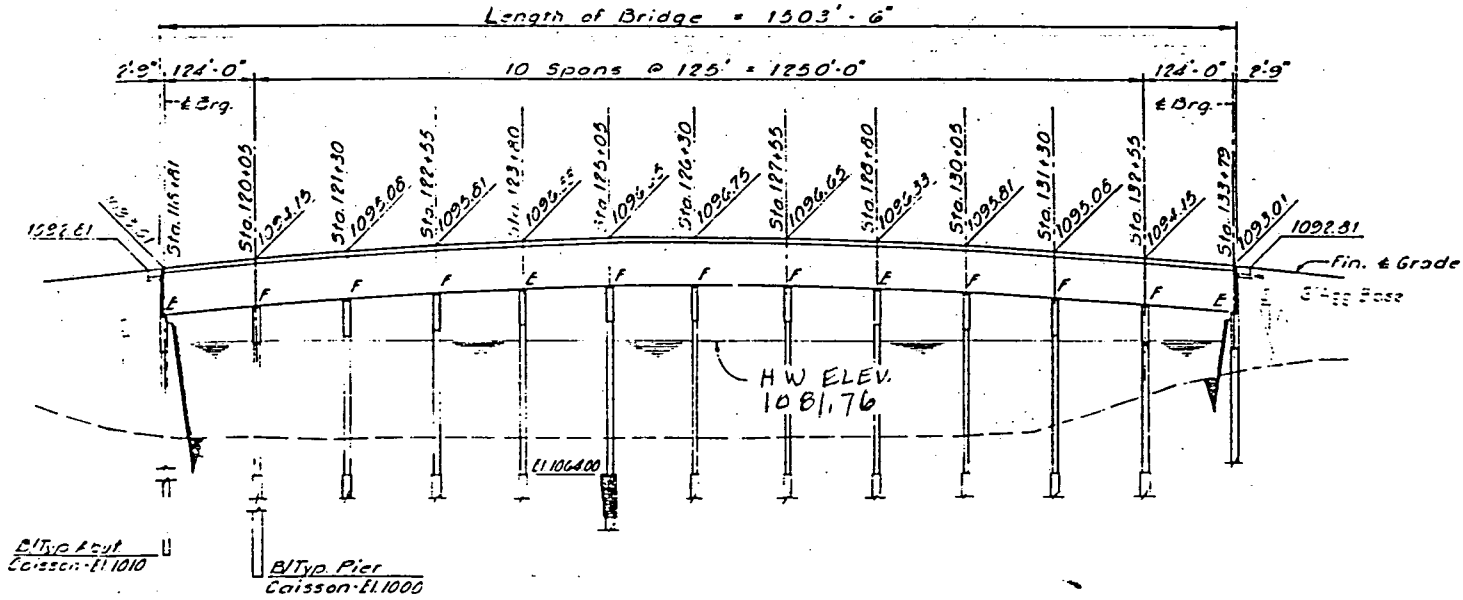

SECTION @ CONST. ℄

Twelve Span Precast Prestressed Concrete Girder Bridge

0° skew

Cannon & Associates, Inc.
Consulting Engineers

project no. : CA 94046-1
project : OLIVE AVE. @ AGUA FRIA
designed by : TR
checked by : HM
date : 5/96 sht. 3 of 24

PIER ANALYSIS

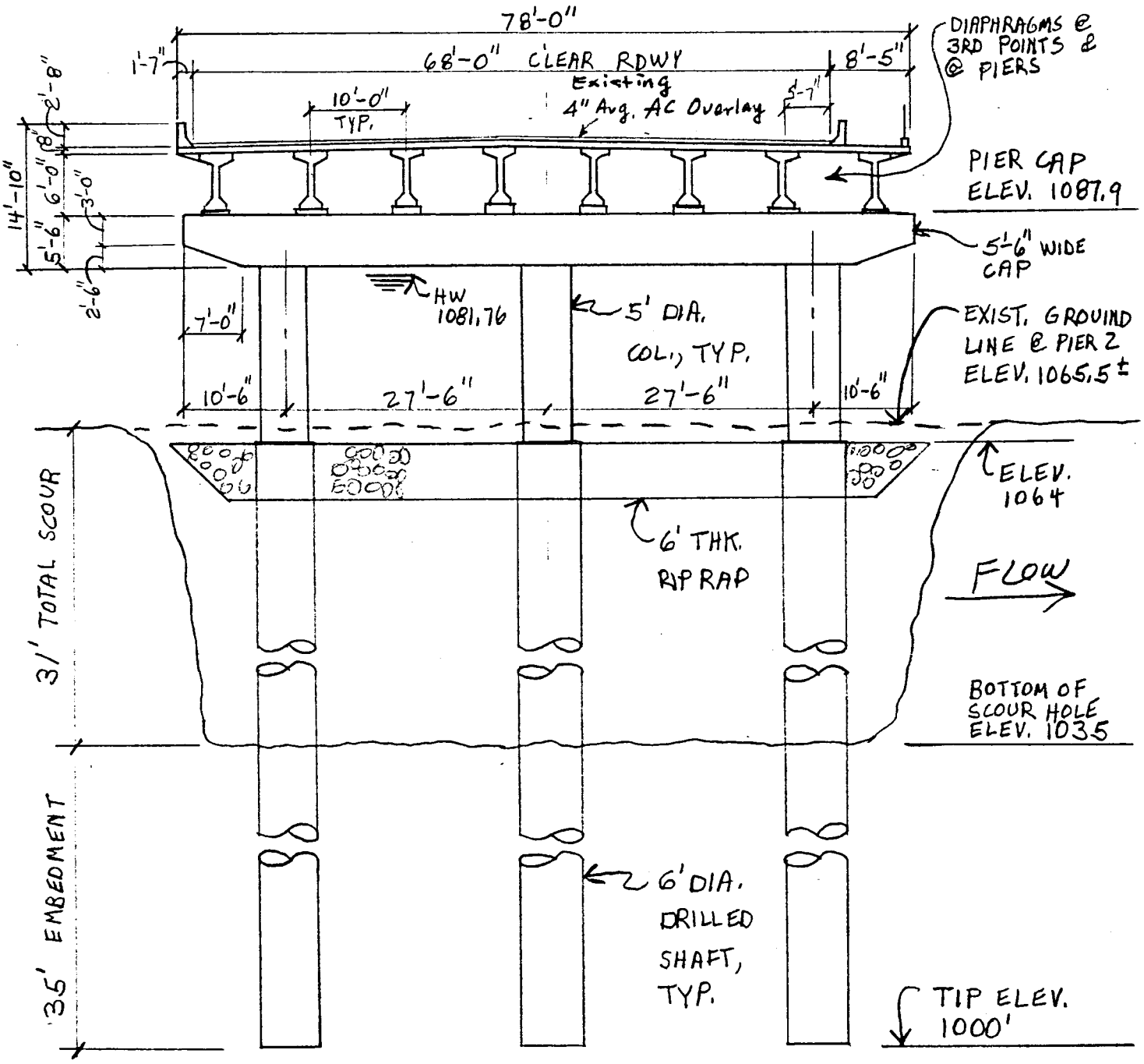

PIER ELEVATION

Cannon & Associates, Inc.
Consulting Engineers

project no. : CA 94046-1
project : OLIVE AVE. @ AGUA FRIA
designed by : TB
checked by : HM
date : 5/96 sht. 4 of 24

PIER ANALYSIS

DEAD LOAD SUPERSTRUCTURE

AC Overlay: $(4''/12)(68')(0.15\ k/ft^3)$ $= 3.4\ k/l$

DECK: $8''/12''(78')(.15\ k/ft^3)$ $= 7.8$

BARRIER: $2\left(\frac{2.48\ ft^3}{ft}\right)(.15\ k/ft^3)$ $= 0.74$

INTERMEDIATE DIAPHRAGMS: $\left[(64/12)70' - 7\left(\frac{1085}{144}\right)\right]\left(\frac{9''}{12}\right)(0.15\ k/ft^3)\left(\frac{2}{125'}\right)$ $= 0.6$

GIRDERS: $1085\ in^2/144\ (.15\ k/ft^3)\ 8$ $= 9.0$

$DL = 21.54\ k/l$

PIER LOADS

DEAD LOAD

SUPERSTRUCTURE REACTION: $21.54\ k/l\ (125') = 2692.5\ k$

DIAPHRAGMS @ PIER: $1.5'\left[6'(70') - 7\left(\frac{1085}{144}\right)\right](0.15) = 82.6\ k$

$2775/8$ GIRDERS $= 347\ k/girder$

PIER CAP: $\left[5.5'(76') - \frac{1}{2}(2.5')(7')(2)\right]5.5'(.15) = 330.4\ k \Rightarrow .3623\ k/in$

$DL = 3105.5\ k$

APPROX. DEAD LOADS PER SHAFT (TO SCOUR LINE)

$$DL_{SHAFT} = \frac{3105.5}{3\ SHAFTS} + \left[\frac{\pi(5')^2}{4}(18.4') + \frac{\pi(6')^2}{4}(29')\right].15 = 1212\ k$$

LIVE LOAD HS20 4 LANES

MAX LL REACTION $= 124.0\ k/LANE$ (Per continuous beam analysis)

Approx. $LL_{shaft} = 124.0\ k/lane\ (4\ lanes)(0.75)/3\ shafts = 124\ k/shaft$

↑ Reduction Factor for Multiple Lanes

PIER ANALYSIS, CONT.

CHECK CAPACITY OF PILES BASED ON SOIL CAPACITY

SERVICE DEAD LOAD = 1212 ^{k}
SERVICE LIVE LOAD = 124 ^{k}
w/o Impact TL = 1336 ^{k}

SEE AGRA CHART SHT 7.

ULTIMATE PILE CAPACITY = 2130 ^{k} > 1336 ^{k} o.k.

∴ CHECK LATERAL STABILITY OF PIERS

CHECK IF PILES ARE FLEXIBLE OR RIGID

SOIL TYPE: CLAYEY SAND, GRAVEL AND COBBLES

n_h = CONSTANT OF HORIZONTAL SUBGRADE REACTION

$$\approx \left(\frac{87^{pci} - 0^{pci}}{15'}\right) 6' = 34.8 \ \#/in^3$$

SLOPE OF 'K' PER AGRA CHART -½" CURVE (AVERAGE). see sht. 24

$$n = \sqrt[5]{\frac{n_h}{EI}} = \sqrt[5]{\frac{34.8^{pci}/1000}{1{,}902{,}238{,}814^{k\text{-}in^2}}}$$

$E = 57\sqrt{4^{ksi}} = 3605^{ksi}$

$I_g = \pi d^4/64 = 1{,}319{,}167 \ in^4$

$n = 0.00712$

$nL = 0.00712(35')(12''/') = 2.99 > 2.0$

$EI \approx \frac{E_c I_g}{2.5} \approx 1{,}902{,}238{,}814^{k\text{-}in^2}$

∴ CONSIDER AS FLEXIBLE PILE

PIER ANALYSIS, CONT.

Project Olive Avenue Bridge Job No. E95-36

FIGURE 2

ESTIMATED ULTIMATE DOWNWARD CAPACITY OF STRAIGHT, DRILLED, CAST-IN-PLACE CONCRETE PIERS

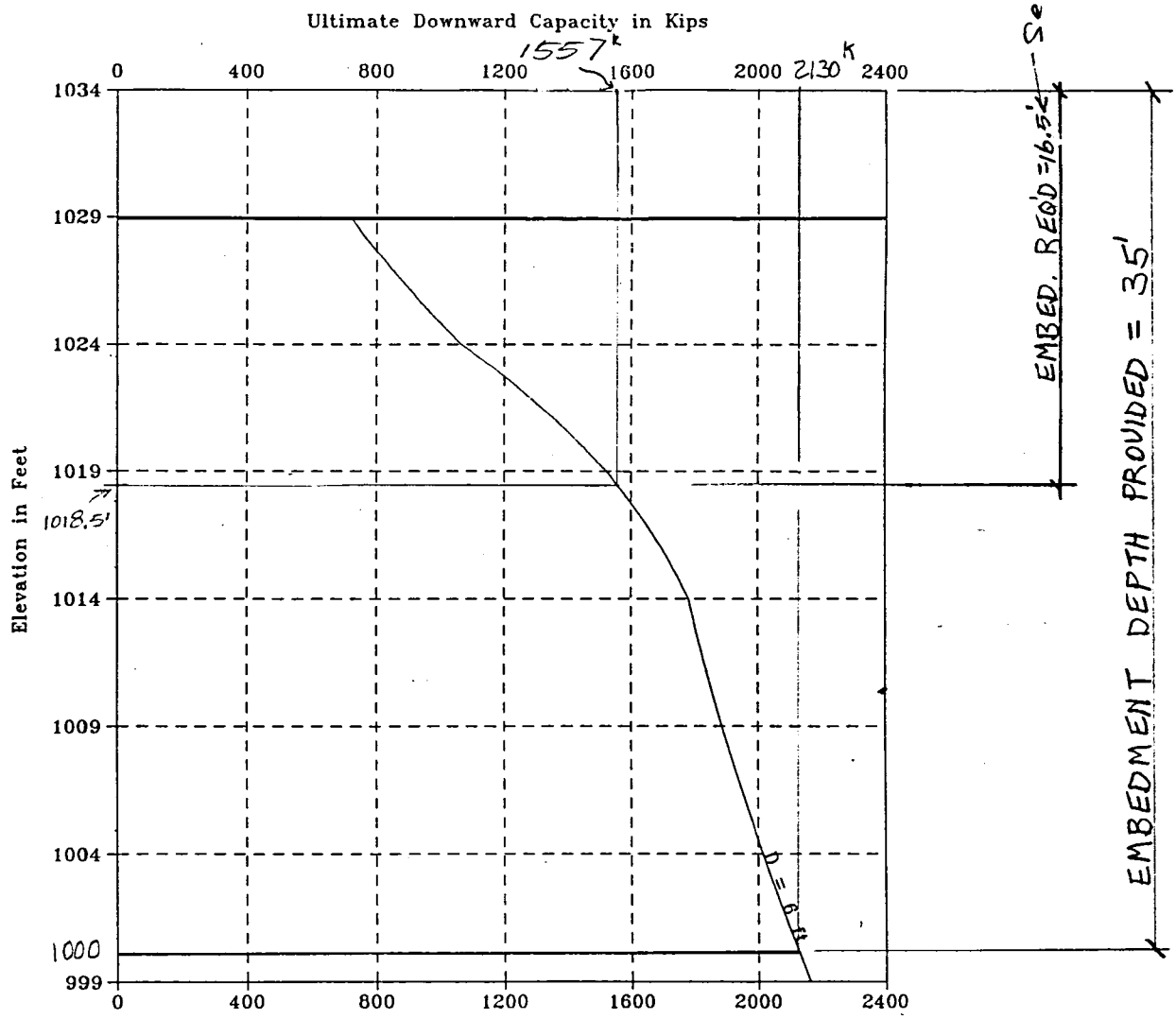

AGRA
Earth & Environmental, Inc.

REFERENCE: GEOTECHNICAL INVESTIGATION REPORT
AGRA EARTH & ENVIRONMENTAL, INC.
JOB NO. E95-36 DATED 4/15/96

Cannon & Associates, Inc.
Consulting Engineers

project no. : CA 94046-1
project : Olive Ave Bridge
designed by : JB
checked by : HM
date : 5/96 sht. 7 of 24

Pier Analysis (CONT.)

Live Load per girder (4 lanes)

LL wheel Load $= 124^{k/lane} / 2\ wheel = 62^{k/wheel}$

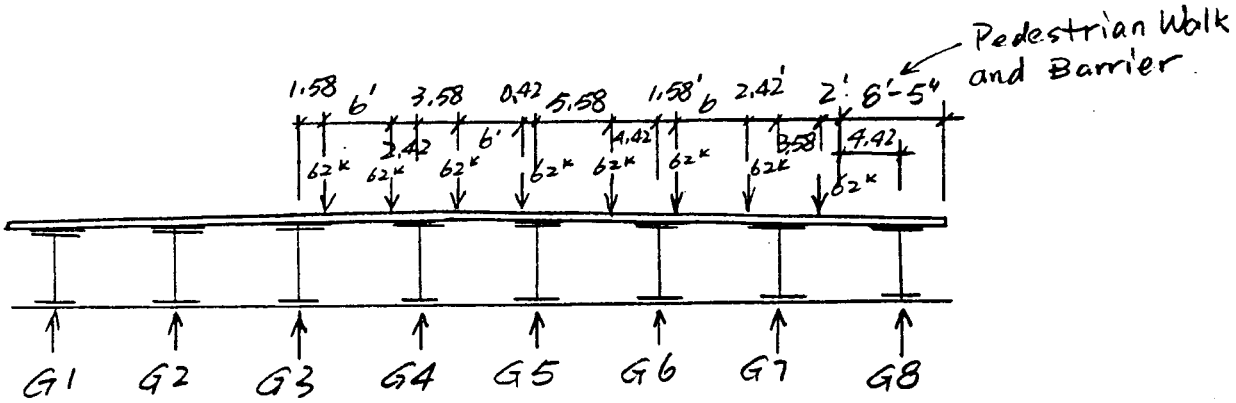

$G1 = 0$

$G2 = 0$

$G3 = 62\left(\frac{8.42 + 2.42}{10}\right) = 67.2^k$

$G4 = 62\left(\frac{7.58 + 1.58 + 6.42 + 0.42}{10}\right) = 99.2^k$,

$G5 = 62\left(\frac{3.58 + 8.58 + 4.42}{10}\right) = 109.0^k$

$G6 = 62\left(\frac{5.58 + 8.42 + 2.42}{10}\right) = 101.8^k$

$G7 = 62\left(\frac{1.58 + 7.58 + 6.42}{10}\right) = 96.6^k$

$G8 = 62(3.58/10) = 22.2^k$

$\Sigma = 496^k$

Dead Load per Girder (see sheet 5)

Assume equal distribution of DL to all girders.

$(2692.5 + 82.6) / 8\ girders = 347^k/girder$

DL =	347^k	347	347	347	347	347	347	347^k
LL =	0^k	0	67.2	99.2	109	101.8	96.6	22.2^k

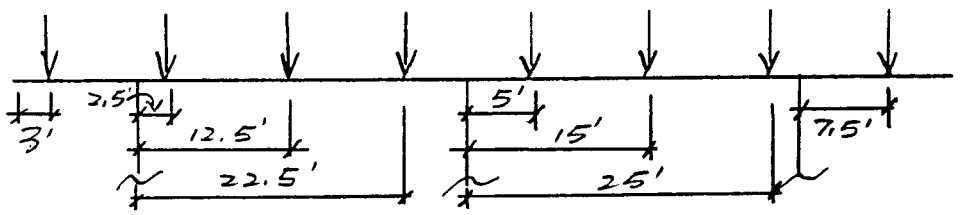

PIER ANALYSIS, CONT.

LATERAL ANALYSIS

STREAM FLOW FORCES

Q_{500} FLOW CONDITION
HW ELEVATION = 1081.76
ANGLE OF ATTACK = 5°, FOR ANALYSIS USE 10° (ATTACK ∠ + 5°)
TOTAL SCOUR = 31'
DRILLED SHAFT SPACING = 27'-6"
AVERAGE VELOCITY = 11.4 FT/SEC

STREAM FLOW CRITERIA:

- SHAFT CLEAR SPACING 22'-6" > 16"
  ∴ STREAM FLOW ACTS ON EACH COLUMN SEPARATELY. USE OBSTRUCTION WIDTH BASED ON PROJECTED AREA AT 10° ANGLE WITH 2 FT OF DEBRIS EACH SIDE OF EACH COLUMN
- USE K = 1.4 FOR SHAFTS WITH DEBRIS
- USE K = 0.7 FOR ROUND SHAFTS w/ NO DEBRIS
- ASSUME DEBRIS EXTENDS 12 ft BELOW HIGH WATER ELEV.

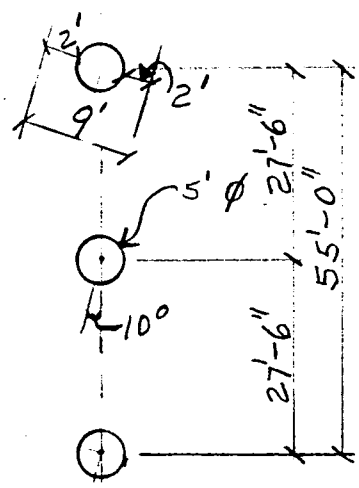

PROJECTED WIDTH:

5' + 2(2') = 9' PER COL.

PIER ANALYSIS, CONT.

STREAM FLOW, CONT.

$$P_{max} = 2\,P_{AVG} = 2(1.4)(11.4'/SEC)^2\,1/1000 = 0.364\ K/ft^2$$

$$\Delta P = \frac{0.364}{16.26'} = 0.0224\ KSF/ft$$

$SF1 = .364\ K/ft^2\,(9') = 3.28\ K/ft$ PER COLUMN

$SF2 = [.364 - 2'(.0224)](9') = 2.87\ K/ft$

$SF3 = [.364 - 4'(.0224)](9') = 2.47\ K/ft$

$SF4 = [.364 - 6'(.0224)](9') = 2.07\ K/ft$

$SF5 = [.364 - 8'(.0224)](9') = 1.66\ K/ft$

$SF6 = [.364 - 10'(.0224)](9') = 1.26\ K/ft$

$SF7 = [.364 - 12'(.0224)](9') = 0.86\ K/ft$

$SF8 = [.364 - 12'(.0224)]\frac{0.7}{1.4}(5') = 0.24\ K/ft$

$SF9 = [.364 - 14'(.0224)]\frac{.7}{1.4}(5') = 0.13\ K/ft$

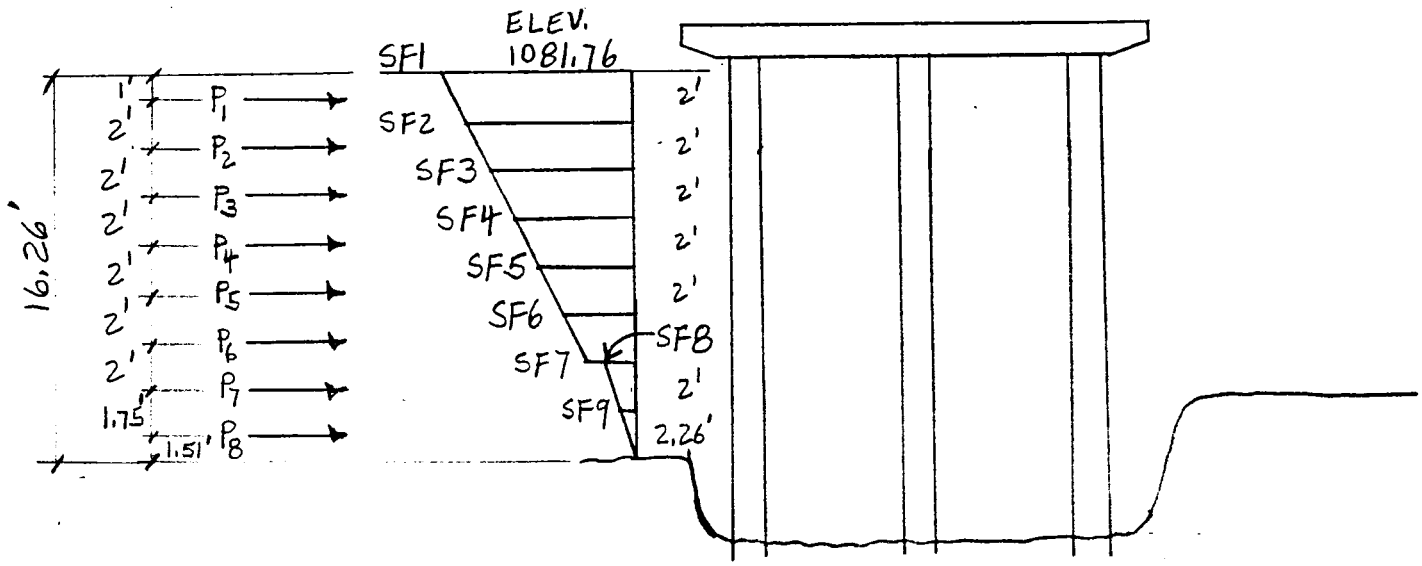

PIER ANALYSIS, CONT.

STREAM FLOW, CONT.

EQUIVALENT CONCENTRATED LOADS FROM STREAM FORCE ON PIER:

$P_1 = (3.28 + 2.87)\,1/2\,(2') = 6.15^{k}$ /COLUMN
$P_2 = (2.87 + 2.47)\,1/2\,(2') = 5.34^{k}$
$P_3 = (2.47 + 2.07)\,1/2\,(2') = 4.54^{k}$
$P_4 = (2.07 + 1.66)\,1/2\,(2') = 3.73^{k}$
$P_5 = (1.66 + 1.26)\,1/2\,(2') = 2.92^{k}$
$P_6 = (1.26 + .86)\,1/2\,(2') = 2.12^{k}$
$P_7 = (.24 + .13)\,1/2\,(2') = 0.37^{k}$
$P_8 = 1/2\,(.13)(2.26') = 0.15^{k}$
25.32^{k}/COL.

RESOLVE TOTAL FORCES INTO LONGITUDINAL AND TRANSVERSE DIRECTIONS:

TRANSVERSE DIRECTION: $\cos 10^\circ = 0.985$
LONGITUDINAL DIRECTION: $\sin 10^\circ = 0.174$

$P_{1T} = 6.15^{k}(.985)$	$= 6.06^{k}$/COL.	$P_{1L} =$	1.07^{k}/COL.
$P_{2T} = 5.34\,(.985)$	$= 5.26$	$P_{2L} =$	0.93
$P_{3T} = 4.54\,(.985)$	$= 4.47$	$P_{3L} =$	0.79
$P_{4T} = 3.73\,(.985)$	$= 3.67$	$P_{4L} =$	0.65
$P_{5T} = 2.92\,(.985)$	$= 2.88$	$P_{5L} =$	0.51
$P_{6T} = 2.12\,(.985)$	$= 2.09$	$P_{6L} =$	0.37
$P_{7T} = 0.37\,(.985)$	$= 0.36$	$P_{7L} =$	0.06
$P_{8T} = 0.15\,(.985)$	$= 0.15$	$P_{8L} =$	0.03

PIER ANALYSIS, CONT.

STREAM FLOW, CONT.

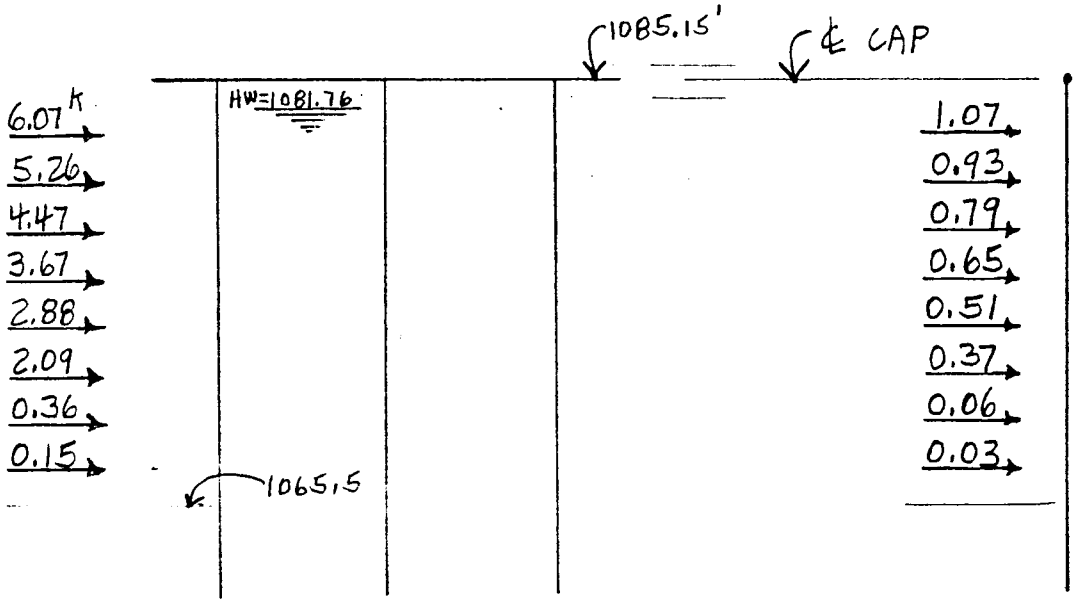

TRANSVERSE MODEL
(LOADS PER SHAFT)

LONGITUDINAL MODEL
(LOADS PER SHAFT)

SEE COMPUTER ANALYSIS (Sheet 20) FOR COMPUTER MODELS AND RESULTS.

Pier Analysis (cont.)

Results From Transverse Frame Analysis

Column Loads:

Top of Column:

Mem. 25: $P_{DL} = 1058.25^k$, $P_{LL} = 284.76^k$, $P_{SF} = 0$

$M_{DL} = 0$, $M_{LL} = -32.43'^{-k}$, $M_{SF} = 661.85'^{-k}$

Mem. 45: $P_{DL} = 1051.45^k$, $P_{LL} = 173.85^k$, $P_{SF} = 33.11^k$

$M_{DL} = -40.98'^{-k}$, $M_{LL} = 121.76'^{-k}$, $M_{SF} = 579.61'^{-k}$

Bott. of Column:

Mem. 26: $P_{DL} = 1089.39^k$, $P_{LL} = 284.76^k$, $P_{SF} = 0$

$M_{DL} = 0$, $M_{LL} = 25.01'^{-k}$, $M_{SF} = 542.93'^{-k}$

Mem. 46: $P_{DL} = 1082.59^k$, $P_{LL} = 173.85^k$, $P_{SF} = 33.11^k$

$M_{DL} = -30.83'^{-k}$, $M_{LL} = 90.98'^{-k}$, $M_{SF} = 481.06'^{-k}$

Shaft Loads @ Point of Max. Moment

Mem 33: $P_{DL} = 1271.92^k$, $P_{LL} = 284.76^k$, $P_{SF} = 0$

$M_{DL} = 0$, $M_{LL} = 2.46'^{-k}$, $M_{SF} = 595.20'^{-k}$

Mem. 53: $P_{DL} = 1265.12^k$, $P_{LL} = 173.85^k$, $P_{SF} = 33.11^k$

$M_{DL} = -6.44'^{-k}$, $M_{LL} = 21.8'^{-k}$, $M_{SF} = 582.24'^{-k}$

Results From Longitudinal Frame Analysis:

Column Loads:

Top of Column: Mem 1: $P_{SF} = 0$, $M_{SF} = 0$

Bott. of Column: Mem. 2: $P_{SF} = 0$, $M_{SF} = 56.1'^{-k}$

Shaft Loads: (@ Point of Max. Moment)

Mem. 7: $P_{SF} = 0$, $M_{SF} = 202.23'^{-k}$

Pier Analysis (cont.)

CHECK SHAFT CAPACITY BASED ON STRENGTH OF SOIL:

$P_{TL} = 1271.92 + 284.76^k + 0 = 1557^k$ (Mem. 33 control)

ULTIMATE SHAFT CAPACITY (w/ SAFETY FACTOR = 1.0) $= 2130^k > 1557^k$ O.K.

← SHT 7

SHAFT TIP ELEVATION = 1000'

EMBEDMENT DEPTH PROVIDED = 1035' − 1000' = 35'

EMBEDMENT DEPTH REQ'D = 1035' − 1018.5' = 16.5' (see sht. 7)

CHECK CAPACITY BASED ON STRENGTH OF COLUMN & SHAFT

USE GROUP VII LOADING + LIVE LOAD + IMPACT (without Earthquake)

$$1.3\left[\beta_D D + \beta_{L+I}(L+I) + \beta_E \cancel{E}^{0} + 1.0\cancel{B}^{0} + 1.0\,SF\right]$$

USE $\beta_D = 1.0$ $\beta_{L+I} = 1.0$ $E = 0$ $B = 0$

$$I = \frac{50}{125+125} = 0.20$$

← LL Reduction for 4 Lanes

MEM 25

$P_{U_{COL}} = 1.3[1.0(1058.25) + (1.2)(0.75)(284.76) + 0] = 1709^k$

$M_{UT_{COL}} = 1.3[1.0(0) + 1.2(0.75)(-32.43) + 661.85] = 822.5'^{-k}$

$M_{UL_{COL}} = 1.3[0] = 0$

MEM 45

$P_{U_{col.}} = 1.3[1.0(1051.45) + 1.2(0.75)(173.85) + (33.11)] = 1613^k$

$M_{UT_{col.}} = 1.3[1.0(-40.98) + 1.2(0.75)(121.76) + 579.61] = 842.7'^{-k}$

$M_{UL_{col.}} = 1.3[1.0(0)] = 0$

Mem. 26

$P_{u.col.} = 1.3[1.0(1089.39) + 1.2(0.75)(284.76) + 0] = 1749^k$

$M_{UT.col.} = 1.3[1.0(0) + 1.2(0.75)(25.01) + 542.93] = 735.1'^{-k}$

$M_{UL.col.} = 1.3[56.1] = 72.9'^{-k}$

Pier Analysis (cont.)

Mem. 46
$$\begin{cases} P_u = 1.3[1082.59 + 1.2(0.75)(173.85) + 33.11] & = 1654^k \\ M_{u.T.col} = 1.3[-30.83 + 1.2(0.75)(90.98) + 481.06] & = 691.7^{'-k} \\ M_{uL\ col} = 1.3[56.1] & = 72.9^{'-k} \end{cases}$$

Mem. 33
$$\begin{cases} P_u = 1.3[1271.92 + 1.2(0.75)(284.76) + 0] & = 1987^k \\ M_{uT.\ shaft} = 1.3[0 + 1.2(0.75)(2.46) + 595.2] & = 776.6^{'-k} \\ M_{uL.shaft} = 1.3[202.23] & = 262.9^{'-k} \end{cases}$$

Mem. 53
$$\begin{cases} P_u = 1.3[1265.12 + 1.2(0.75)(173.85) + 33.11] & = 1891^k \\ M_{uT.\ shaft} = 1.3[-6.44 + 1.2(0.75)(21.8) + 582.24] & = 774.0^{'-k} \\ M_{uL.\ shaft} = 1.3[202.23] & = 262.9^{'-k} \end{cases}$$

Column Slenderness

Transverse Direction: $K \approx 1.2$, $l = 47.4'$, $r = 0.25(5')(12''/') = 15''$

$$K\ell/r = \frac{1.2(47.4')(12''/')}{15''} = 45.5 > 22$$

∴ Moments Must Be Magnified.

Longitudinal Direction: $K \approx 2.1$ (cantilever) $K\ell/r = 80 < 100$

$$\delta_s = \frac{1}{1 - \frac{\Sigma P_u}{\phi \Sigma P_c}} \geq 1.0 \quad , \quad P_c = \frac{\pi^2 E I}{(k l_u)^2}$$

use 0.4Ig

$$P_{c.col.tr.} = \frac{\pi^2(3605^{ksi})(636172)(0.4)}{[1.2(47.4)(12''/')]^2} = 19434^k$$

$$P_{c.cl.Long.} = \frac{\pi^2(3605)(636172)(0.4)}{[2.1(47.4)(12)]^2} = 6346^k$$

Pier Analysis (CONT.)

Mem. 25: $\delta_{s.tr} = \dfrac{1}{1-\dfrac{1709}{0.7(19434)}} = 1.14$ $\quad \delta_{s.long} = \dfrac{1}{1-\dfrac{1709}{0.7(6346)}} = 1.63$

Mem. 45: $\delta_{s.tr.} = \dfrac{1}{1-\dfrac{1613}{0.7(19434)}} = 1.13$ $\quad \delta_{s.long} = \dfrac{1}{1-\dfrac{1613}{0.7(6346)}} = 1.57$

Mem. 26: $\delta_{s.tr.} = \dfrac{1}{1-\dfrac{1749}{0.7(19434)}} = 1.15$ $\quad \delta_{s.long} = \dfrac{1}{1-\dfrac{1749}{0.7(6346)}} = 1.65$

Mem. 46: $\delta_{s.tr.} = \dfrac{1}{1-\dfrac{1654}{0.7(19434)}} = 1.14$ $\quad \delta_{s.long} = \dfrac{1}{1-\dfrac{1654}{0.7(6346)}} = 1.59$

use 0.4 Ig

$$P_{c.shaft.tr.} = \frac{\pi^2(3605)(1319166)(0.4)}{[1.2(47.4)(12''/')]^2} = 40298^k$$

$$P_{c.shaft.long} = \frac{\pi^2(3605)(1319166)(0.4)}{[2.1(47.4)(12''/')]^2} = 13159^k$$

Mem. 33: $\delta_{s.tr.} = \dfrac{1}{1-\dfrac{1987}{0.7(40298)}} = 1.08$, $\delta_{s.long} = \dfrac{1}{1-\dfrac{1987}{0.7(13159)}} = 1.28$

Mem. 53: $\delta_{s.tr.} = \dfrac{1}{1-\dfrac{1891}{0.7(40298)}} = 1.07$, $\delta_{s.long} = \dfrac{1}{1-\dfrac{1891}{0.7(13159)}} = 1.26$

Pier Analysis (cont.)

Max. Column Loads

Mem. 25: $P_u = 1709^k$, $M_{u.tr.} = 1.14(822.5) = 938^{'-k}$, $M_{u.long} = 1.63(0) = 0$

Mem. 45: $P_u = 1613^k$, $M_{u.tr.} = 1.13(842.7) = 952^{'-k}$, $M_{u.long} = 1.57(0) = 0$

Mem. 26: $P_u = 1749^k$, $M_{u.tr.} = 1.15(735.1) = 845^{'-k}$, $M_{u.long} = 1.65(72.9) = 120^{'-k}$

Mem. 46: $P_u = 1654^k$, $M_{u.tr.} = 1.14(691.7) = 789^{'-k}$, $M_{u.long} = 1.59(72.9) = 116^{'-k}$

$f_c' = 4$ ksi

$f_y = 60$ ksi

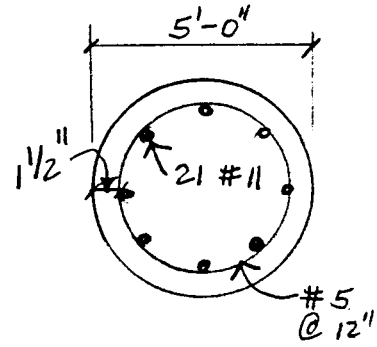

ULTIMATE STRENGTH DESIGN
OF
REINFORCED CONCRETE COLUMNS

```
CODER    :  HONG MEI
CHECKER  :
DATE     :   6-27-96
JOB IDENTIFICATION :  OLIVE AVE. PIER COLUMN
DATA USED
**** ****
ANALYSIS OF ROUND COLUMN - SIZE : DIAMETER =  60.00 IN.
STRESSES : FC'      = 4.000 K.S.I.  FC = 3.400 K.S.I.  FY       = 60.000 K.S.I
           E-CONC. = 3605. K.S.I.                      E-STEEL = 29000. K.S.I
           MAX. CONC. STRAIN (EU) =  .003
CAPACITY REDUCTION FACTORS :
COMPRESSION =  .70     FLEXURE =  .90
REINFORCEMENT DATA :          CIRCULAR REINFORCEMENT PATTERN

WITH- 21 NO. 11 BARS   AST= 32.76 SQ.IN. =  1.16PCT.   COVER= 2.12 IN.
BAR SPACING =  8.13 IN.
OUTPUT
******
```

LOAD CASE	APPLIED LOADS AP	AMX	AMY	COMPUTED STRENGTH UP	UMX	UMY	UP/AP
1	1709.	938.	0.	5821.	3189.	0.	3.405
2	1613.	952.	0.	5672.	3356.	0.	3.519
3	1749.	845.	120.	6027.	2917.	414.	3.447
4	1654.	789.	116.	6048.	2890.	425.	3.658

> 1.0 O.K.

Pier Analysis (CONT.)

Max. Drilled Shaft Loads

Mem $P_u = 1987^k$, $M_{u.tr.} = 1.08(776.6) = 839^{1-k}$, $M_{u.long} = 1.28(262.9) = 337^{1-k}$

Mem. $P_u = 1891^k$. $M_{u.tr.} = 1.07(774) = 828^{1-k}$. $M_{u.long} = 1.26(262.9) = 331^{1-k}$

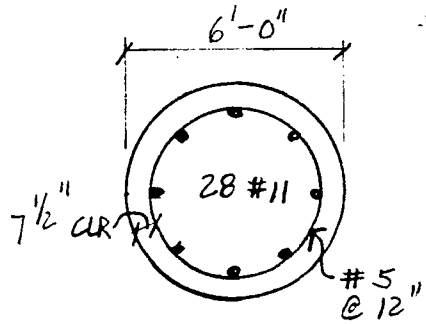

ULTIMATE STRENGTH DESIGN
OF
REINFORCED CONCRETE COLUMNS

```
CODER    :  HONG MEI
CHECKER  :
DATE     :   7- 3-96
JOB IDENTIFICATION :  OLIVE AVE. DRILLED SHAFT
DATA USED
**** ****
ANALYSIS OF ROUND COLUMN - SIZE : DIAMETER =  72.00 IN.
STRESSES : FC'      = 4.000 K.S.I.  FC = 3.400 K.S.I.  FY      = 60.000 K.S.I
           E-CONC. = 3605. K.S.I.                      E-STEEL = 29000. K.S.I
           MAX. CONC. STRAIN (EU) =  .003
CAPACITY REDUCTION FACTORS :
COMPRESSION =  .70     FLEXURE =  .90
REINFORCEMENT DATA :          CIRCULAR REINFORCEMENT PATTERN

WITH- 28 NO. 11 BARS   AST= 43.68 SQ.IN. =  1.08PCT.   COVER= 8.12 IN.
BAR SPACING =  6.10 IN.
OUTPUT
******
```

LOAD CASE	APPLIED LOADS AP	AMX	AMY	COMPUTED STRENGTH UP	UMX	UMY	UP/AP
1	1987.	839.	337.	9022.	3810.	1530.	4.541 } >1.0 O.K.
2	1891.	828.	331.	8947.	3918.	1566.	4.732 }

SUMMARY OF RESULTS

THE PIERS ARE VERTICALLY AND LATERALLY STABLE FOR Q_{500} STREAM FLOW CONDITIONS

COMPUTER ANALYSIS

COMPUTER MODELS

TRANSVERSE PIER FRAME MODEL

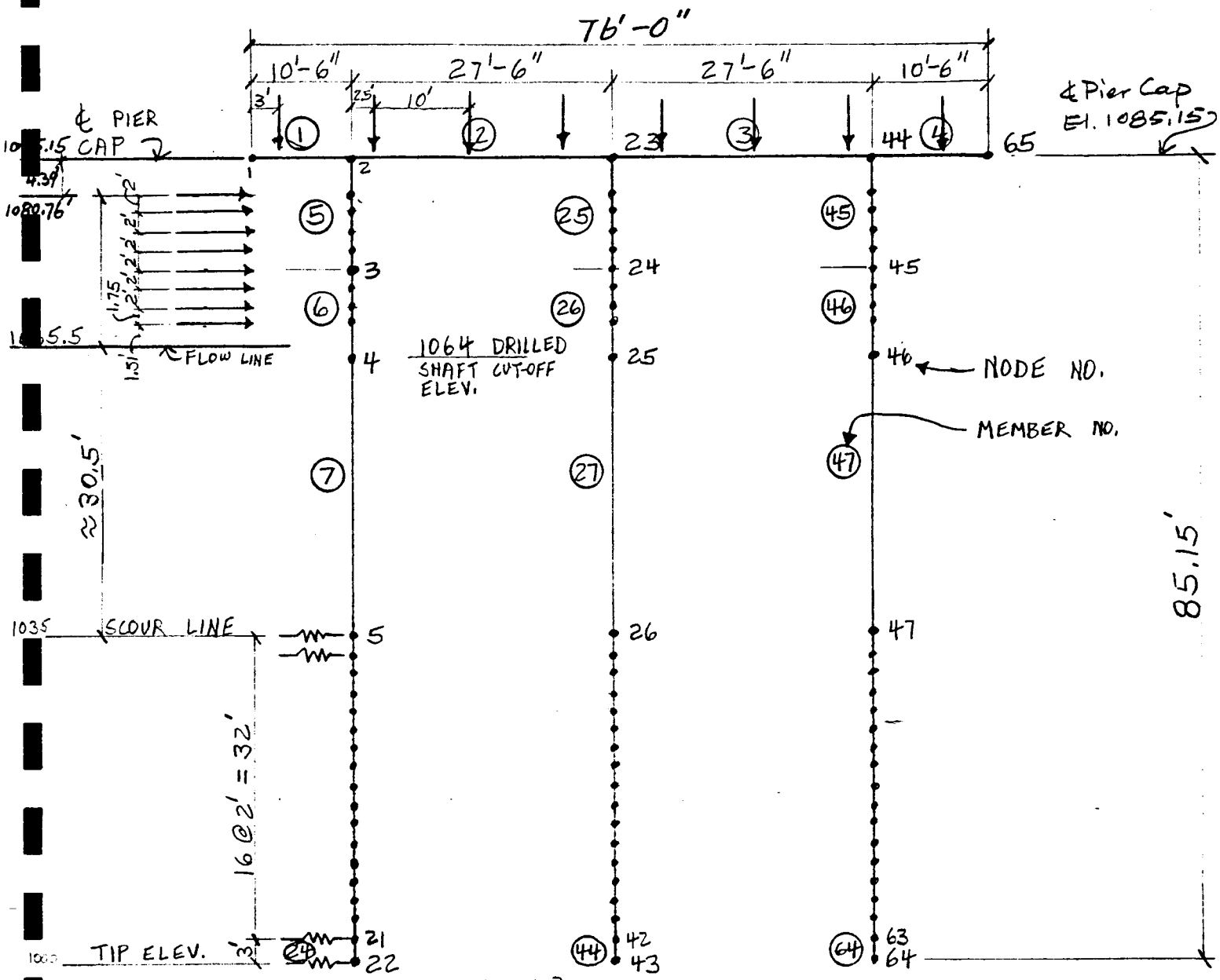

$I_{CAP} = 1/12(66")(66")^3 = 1,581,228 \text{ in}^4$ $\quad A_{cap} = 66"(66") = 4356 \text{ in}^2$

$E_{CAP} = 57\sqrt{4000} = 3605 \text{ ksi}$

$I_{COL} = 1.0\, I_g = (1.0)\,\pi(60")^4/64 = 636172 \text{ in}^4,\ A = 2827 \text{ in}^2$

$I_{SHAFT} = 1.0\, I_g = (1.0)\,\pi(72")^4/64 = 1319166 \text{ in}^4,\ A = 4072 \text{ in}^2$

COMPUTER MODELS

LONGITUDINAL PIER FRAME MODEL (CANTILEVER)

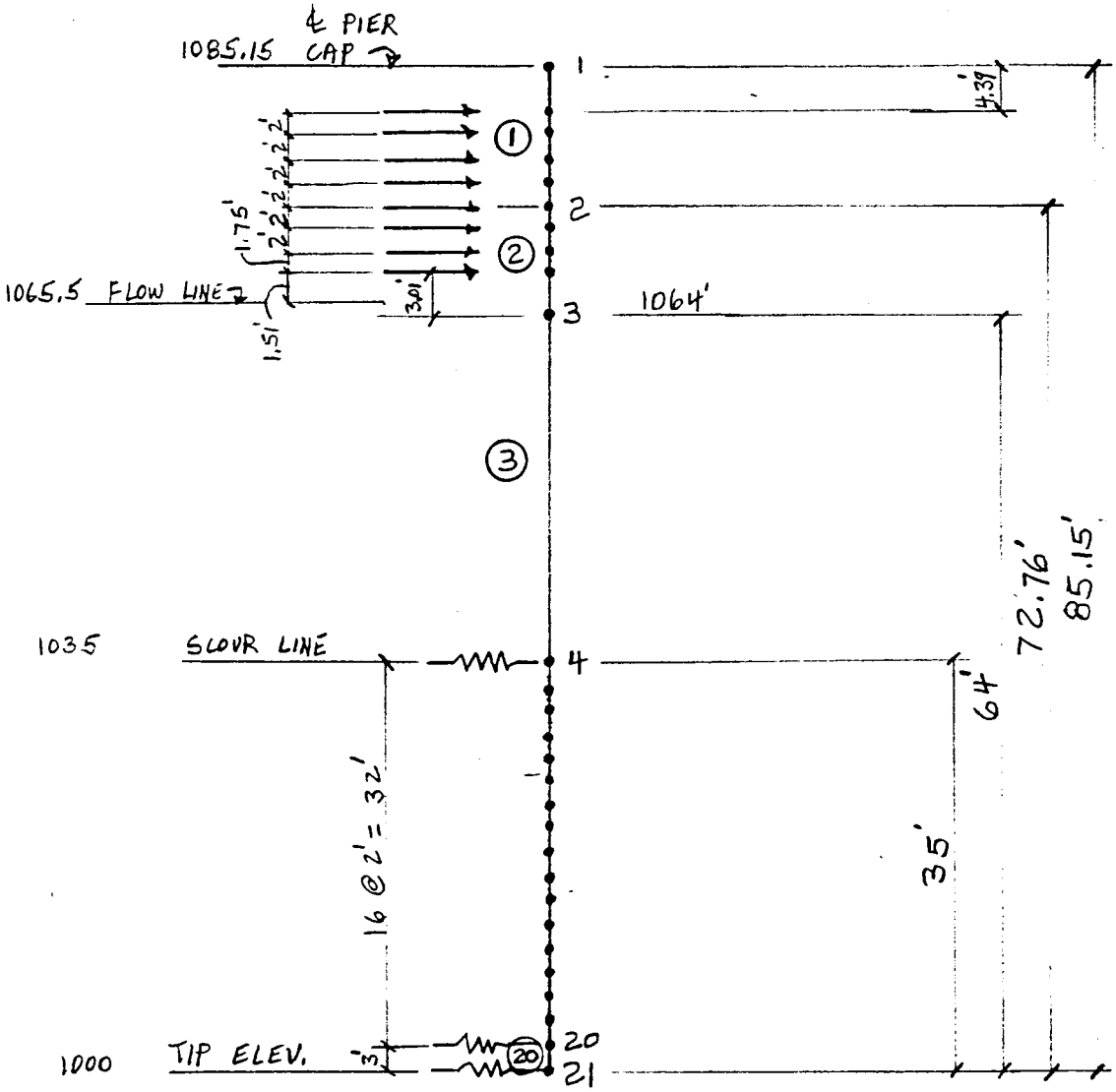

Cannon & Associates, Inc.
Consulting Engineers

project no. : CA 94046-1
project : OLIVE AVE. @ AGUA FRIA
designed by : TB
checked by : HM
date : 5/96 sht. 22 of 24

COMPUTER ANALYSIS

SPRING CONSTANTS

BASED ON LATERAL SUBGRADE MODULUS (K) PROVIDED BY AGRA CHARTS. USE K BASED ON 1/2" LATERAL DEFLECTION.

SPRING CONSTANT = K (SHAFT Ø)(NODE SPACING)
= K (72")(24")

DEPTH BELOW SCOUR LINE ft		SUBGRADE MODULUS pci	SPRING CONSTANT K/in
0		0	0
2		14	24
4		28	48
6		39	67
8		48	83
10		56	97
12		70.4	122
14		76	131
16		96	166
18		109	188
20		122	211
22		138	238
24		156.8	271
26		166	287
28		184	318
30		200	346
32		218 (72)(30)	471
35		245 (72)(18)	318

PIER ANALYSIS, CONT.

LATERAL ANALYSIS, CONT.

Figure 13 - Olive Avenue
6-Foot Diameter

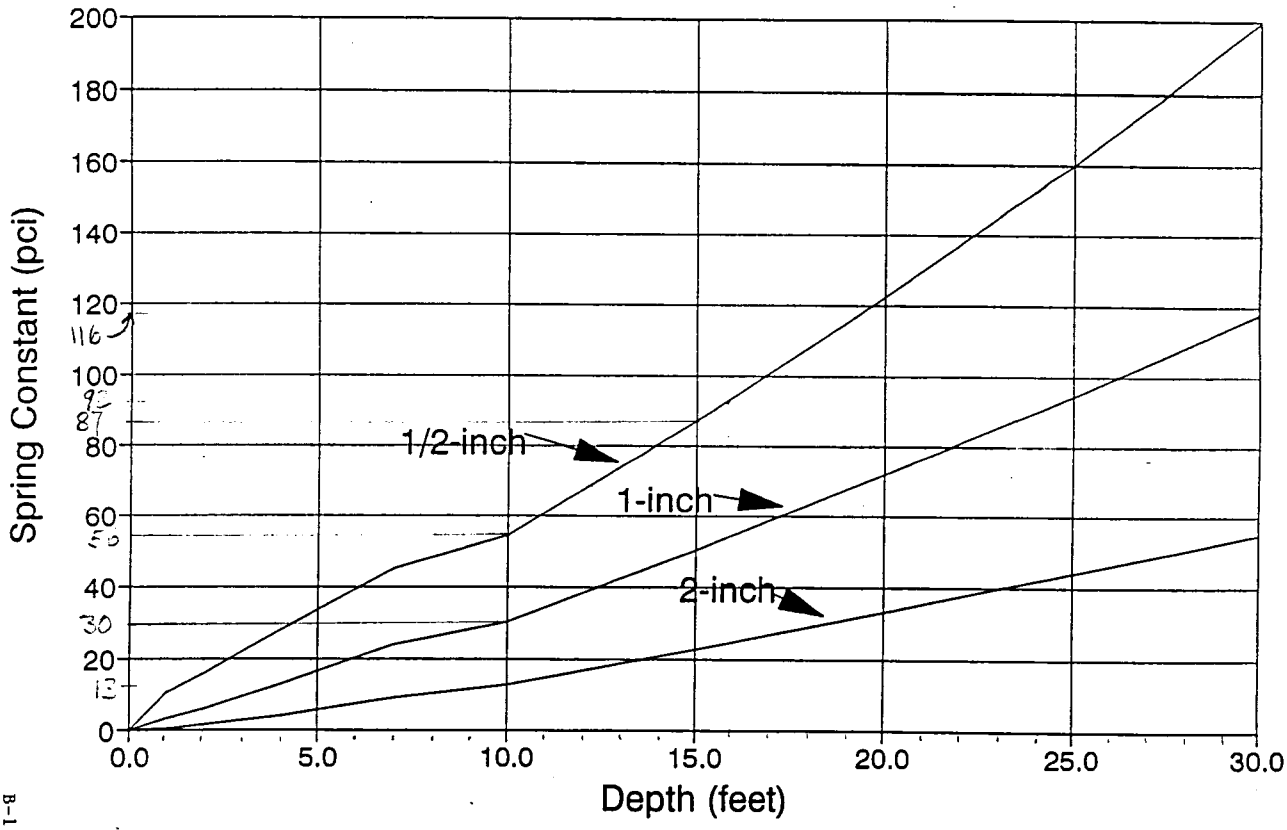

B-13

Cannon & Associates, Inc.
Consulting Engineers

project no. : CA 94046-1
project : Olive Ave. Bridge
designed by : TB
checked by : HM
date : 5/96 sht. 24 of 24

OLIVE AVENUE AT AGUA FRIA RIVER, TRANSVERSE FRAME ANALYSIS, Q500 FLOW

F R A M E E L E M E N T F O R C E S

ELT ID	LOAD COND	AXIAL FORCE	DIST ENDI	1-2 PLANE SHEAR	1-2 PLANE MOMENT	1-3 PLANE SHEAR	1-3 PLANE MOMENT	AXIAL TORQ
1								
	1	.00						
			.0	.00	.00			
			36.0	-13.04	-234.77			
			126.0	-392.65	-34105.94			
	2	.00						
			.0	.00	.00			
			126.0	.00	.00			
	3	.00						
			.0	.00	.00			
			126.0	.00	.00			
2								
	1	.82						
			.0	640.56	-33614.18			
			30.0	629.69	-14560.55			
			150.0	239.21	16753.27			
			270.0	-151.27	1209.96			
			330.0	-520.00	-29338.11			
	2	-1.89						
			.0	37.39	-1161.36			
			150.0	37.39	4447.29			
			270.0	-29.81	870.20			
			330.0	-129.01	-6870.34			
	3	-.55						
			.0	-33.11	6955.26			
			330.0	-33.11	-3971.14			
3								
	1	.82						
			.0	520.00	-29338.11			
			60.0	498.27	1209.96			
			180.0	107.79	16753.27			
			300.0	-282.69	-14560.55			
			330.0	-640.56	-33614.18			
	2	-2.48						
			.0	155.75	-7259.54			
			60.0	155.75	2085.63			
			180.0	46.75	7695.98			
			300.0	-55.05	1090.32			
			330.0	-151.65	-3459.10			
	3	.55						
			.0	-33.11	3971.14			
			330.0	-33.11	-6955.26			
4								
	1	.00						
			.0	392.65	-34105.94			
			90.0	360.04	-234.77			
			126.0	.00	.00			
	2	.00						
			.0	22.20	-1998.00			
			90.0	22.20	.00			
			126.0	.00	.00			
	3	.00						

OLIVE AVENUE AT AGUA FRIA RIVER, TRANSVERSE FRAME ANALYSIS, Q500 FLOW

F R A M E E L E M E N T F O R C E S

ELT ID	LOAD COND	AXIAL FORCE	DIST END1	1-2 PLANE SHEAR	1-2 PLANE MOMENT	1-3 PLANE SHEAR	1-3 PLANE MOMENT	AXIAL TORQ
			.0	.00	.00			
			126.0	.00	.00			
5								
	1	-1051.45						
			.0	.82	-491.76			
			148.7	.82	-369.94			
	2	-37.39						
			.0	-1.89	1161.36			
			148.7	-1.89	881.06			
	3	33.11						
			.0	-.55	-6955.26			
			52.7	-.55	-6984.14			
			76.7	5.52	-6851.62			
			100.7	10.78	-6592.86			
			124.7	15.25	-6226.82			
			148.7	18.92	-5772.70			
25								
	1	-1058.25						
			.0	.00	.00			
			148.7	.00	.00			
	2	-284.76						
			.0	-.60	389.20			
			148.7	-.60	300.15			
	3	.00						
			.0	1.10	-7942.27			
			52.7	1.10	-7884.50			
			76.7	7.17	-7712.51			
			100.7	12.43	-7414.27			
			124.7	16.90	-7008.75			
			148.7	20.57	-6515.15			
45								
	1	-1051.45						
			.0	-.82	491.76			
			148.7	-.82	369.94			
	2	-173.85						
			.0	2.48	-1461.10			
			148.7	2.48	-1091.75			
	3	-33.11						
			.0	-.55	-6955.26			
			52.7	-.55	-6984.14			
			76.7	5.52	-6851.62			
			100.7	10.78	-6592.86			
			124.7	15.25	-6226.82			
			148.7	18.92	-5772.70			
6								
	1	-1082.59						
			.0	.82	-369.94			
			105.1	.82	-283.81			
	2	-37.39						
			.0	-1.89	881.06			
			105.1	-1.89	682.88			
	3	33.11						

OLIVE AVENUE AT AGUA FRIA RIVER, TRANSVERSE FRAME ANALYSIS, Q500 FLOW

F R A M E E L E M E N T F O R C E S

ELT ID	LOAD COND	AXIAL FORCE	DIST ENDI	1-2 PLANE SHEAR	1-2 PLANE MOMENT	1-3 PLANE SHEAR	1-3 PLANE MOMENT	AXIAL TORQ
			.0	21.80	-5772.70			
			24.0	21.80	-5249.46			
			48.0	23.89	-4676.06			
			69.0	24.25	-4166.78			
			105.1	24.40	-3285.39			
26								
	1	-1089.39						
			.0	.00	.00			
			105.1	.00	.00			
	2	-284.76						
			.0	-.60	300.15			
			105.1	-.60	237.19			
	3	.00						
			.0	23.45	-6515.15			
			24.0	23.45	-5952.43			
			48.0	25.54	-5339.55			
			69.0	25.90	-4795.72			
			105.1	26.05	-3854.92			
46								
	1	-1082.59						
			.0	-.82	369.94			
			105.1	-.82	283.81			
	2	-173.85						
			.0	2.48	-1091.75			
			105.1	2.48	-830.61			
	3	-33.11						
			.0	21.80	-5772.70			
			24.0	21.80	-5249.46			
			48.0	23.89	-4676.06			
			69.0	24.25	-4166.78			
			105.1	24.40	-3285.39			
7								
	1	-1156.98						
			.0	.82	-283.81			
			348.0	.82	1.33			
	2	-37.39						
			.0	-1.89	682.88			
			348.0	-1.89	26.80			
	3	33.11						
			.0	24.40	-3285.39			
			348.0	24.40	5206.40			
27								
	1	-1163.78						
			.0	.00	.00			
			348.0	.00	.00			
	2	-284.76						
			.0	-.60	237.19			
			348.0	-.60	28.77			
	3	.00						
			.0	26.05	-3854.92			
			348.0	26.05	5209.30			

OLIVE AVENUE AT AGUA FRIA RIVER, TRANSVERSE FRAME ANALYSIS, Q500 FLOW

F R A M E E L E M E N T F O R C E S

ELT ID	LOAD COND	AXIAL FORCE	DIST ENDI	1-2 PLANE SHEAR	1-2 PLANE MOMENT	1-3 PLANE SHEAR	1-3 PLANE MOMENT	AXIAL TORQ
47								
	1	-1156.98						
			.0	-.82	283.81			
			348.0	-.82	-1.33			
	2	-173.85						
			.0	2.48	-830.61			
			348.0	2.48	33.89			
	3	-33.11						
			.0	24.40	-3285.39			
			348.0	24.40	5206.40			
8								
	1	-1222.71						
			.0	.82	1.33			
			24.0	.82	20.99			
	2	-37.39						
			.0	-1.89	26.80			
			24.0	-1.89	-18.44			
	3	33.11						
			.0	24.40	5206.40			
			24.0	24.40	5792.04			
9								
	1	-1231.19						
			.0	.76	20.99			
			24.0	.76	39.29			
	2	-37.39						
			.0	-1.76	-18.44			
			24.0	-1.76	-60.72			
	3	33.11						
			.0	21.38	5792.04			
			24.0	21.38	6305.15			
10								
	1	-1239.67						
			.0	.66	39.29			
			24.0	.66	55.12			
	2	-37.39						
			.0	-1.54	-60.72			
			24.0	-1.54	-97.64			
	3	33.11						
			.0	16.06	6305.15			
			24.0	16.06	6690.64			
11								
	1	-1248.16						
			.0	.53	55.12			
			24.0	.53	67.90			
	2	-37.39						
			.0	-1.26	-97.64			
			24.0	-1.26	-127.91			
	3	33.11						
			.0	9.61	6690.64			
			24.0	9.61	6921.19			
12								
	1	-1256.64						

OLIVE AVENUE AT AGUA FRIA RIVER, TRANSVERSE FRAME ANALYSIS, Q500 FLOW

F R A M E E L E M E N T F O R C E S

ELT ID	LOAD COND	AXIAL FORCE	DIST ENDI	1-2 PLANE SHEAR	1-2 PLANE MOMENT	1-3 PLANE SHEAR	1-3 PLANE MOMENT	AXIAL TORQ
			.0	.39	67.90			
			24.0	.39	77.35			
	2	-37.39						
			.0	-.96	-127.91			
			24.0	-.96	-150.90			
	3	33.11						
			.0	2.74	6921.19			
			24.0	2.74	6986.88			
13	----------							
	1	-1265.12						
			.0	.25	77.35			
			24.0	.25	83.43			
	2	-37.39						
			.0	-.65	-150.90			
			24.0	-.65	-166.50			
	3	33.11						
			.0	-4.05	6986.88			
			24.0	-4.05	6889.63			
14	----------							
	1	-1273.60						
			.0	.10	83.43			
			24.0	.10	85.89			
	2	-37.39						
			.0	-.32	-166.50			
			24.0	-.32	-174.14			
	3	33.11						
			.0	-11.14	6889.63			
			24.0	-11.14	6622.35			
15	----------							
	1	-1282.08						
			.0	-.03	85.89			
			24.0	-.03	85.11			
	2	-37.39						
			.0	-.02	-174.14			
			24.0	-.02	-174.60			
	3	33.11						
			.0	-17.29	6622.35			
			24.0	-17.29	6207.36			
16	----------							
	1	-1290.56						
			.0	-.17	85.11			
			24.0	-.17	80.99			
	2	-37.39						
			.0	.29	-174.60			
			24.0	.29	-167.65			
	3	33.11						
			.0	-23.38	6207.36			
			24.0	-23.38	5646.21			
17	----------							
	1	-1299.05						
			.0	-.30	80.99			
			24.0	-.30	73.90			

OLIVE AVENUE AT AGUA FRIA RIVER, TRANSVERSE FRAME ANALYSIS, Q500 FLOW

F R A M E E L E M E N T F O R C E S

ELT ID	LOAD COND	AXIAL FORCE	DIST END1	1-2 PLANE SHEAR	1-2 PLANE MOMENT	1-3 PLANE SHEAR	1-3 PLANE MOMENT	AXIAL TORQ
	2	-37.39						
			.0	.57	-167.65			
			24.0	.57	-154.06			
	3	33.11						
			.0	-28.48	5646.21			
			24.0	-28.48	4962.59			
18								
	1	-1307.53						
			.0	-.40	73.90			
			24.0	-.40	64.35			
	2	-37.39						
			.0	.80	-154.06			
			24.0	.80	-134.95			
	3	33.11						
			.0	-32.34	4962.59			
			24.0	-32.34	4186.40			
19								
	1	-1316.01						
			.0	-.47	64.35			
			24.0	-.47	52.97			
	2	-37.39						
			.0	.97	-134.95			
			24.0	.97	-111.63			
	3	33.11						
			.0	-34.73	4186.40			
			24.0	-34.73	3352.98			
20								
	1	-1324.49						
			.0	-.52	52.97			
			24.0	-.52	40.52			
	2	-37.39						
			.0	1.08	-111.63			
			24.0	1.08	-85.73			
	3	33.11						
			.0	-35.34	3352.98			
			24.0	-35.34	2504.86			
21								
	1	-1332.97						
			.0	-.52	40.52			
			24.0	-.52	27.96			
	2	-37.39						
			.0	1.10	-85.73			
			24.0	1.10	-59.38			
	3	33.11						
			.0	-33.88	2504.86			
			24.0	-33.88	1691.79			
22								
	1	-1341.45						
			.0	-.48	27.96			
			24.0	-.48	16.39			
	2	-37.39						
			.0	1.02	-59.38			

OLIVE AVENUE AT AGUA FRIA RIVER, TRANSVERSE FRAME ANALYSIS, Q500 FLOW

F R A M E E L E M E N T F O R C E S

ELT ID	LOAD COND	AXIAL FORCE	DIST END1	1-2 PLANE SHEAR	1-2 PLANE MOMENT	1-3 PLANE SHEAR	1-3 PLANE MOMENT	AXIAL TORQ
	3	33.11	24.0	1.02	-34.91			
			.0	-30.02	1691.79			
			24.0	-30.02	971.36			
23								
	1	-1349.94						
			.0	-.39	16.39			
			24.0	-.39	7.06			
	2	-37.39						
			.0	.83	-34.91			
			24.0	.83	-15.09			
	3	33.11						
			.0	-23.45	971.36			
			24.0	-23.45	408.53			
24								
	1	-1360.54						
			.0	-.20	7.06			
			36.0	-.20	.00			
	2	-37.39						
			.0	.42	-15.09			
			36.0	.42	.00			
	3	33.11						
			.0	-11.35	408.53			
			36.0	-11.35	.00			
44								
	1	-1367.34						
			.0	.00	.00			
			36.0	.00	.00			
	2	-284.76						
			.0	.11	-4.02			
			36.0	.11	.00			
	3	.00						
			.0	-11.74	422.70			
			36.0	-11.74	.00			
64								
	1	-1360.54						
			.0	.20	-7.06			
			36.0	.20	.00			
	2	-173.85						
			.0	-.63	22.54			
			36.0	-.63	.00			
	3	-33.11						
			.0	-11.35	408.53			
			36.0	-11.35	.00			
28								
	1	-1229.51						
			.0	.00	.00			
			24.0	.00	.00			
	2	-284.76						
			.0	-.60	28.77			
			24.0	-.60	14.39			
	3	.00						

OLIVE AVENUE AT AGUA FRIA RIVER, TRANSVERSE FRAME ANALYSIS, Q500 FLOW

F R A M E E L E M E N T F O R C E S

ELT ID	LOAD COND	AXIAL FORCE	DIST ENDI	1-2 PLANE SHEAR	1-2 PLANE MOMENT	1-3 PLANE SHEAR	1-3 PLANE MOMENT	AXIAL TORQ
			.0	26.05	5209.30			
			24.0	26.05	5834.42			
29								
	1	-1238.00						
			.0	.00	.00			
			24.0	.00	.00			
	2	-284.76						
			.0	-.56	14.39			
			24.0	-.56	.84			
	3	.00						
			.0	22.91	5834.42			
			24.0	22.91	6384.25			
30								
	1	-1246.48						
			.0	.00	.00			
			24.0	.00	.00			
	2	-284.76						
			.0	-.50	.84			
			24.0	-.50	-11.23			
	3	.00						
			.0	17.39	6384.25			
			24.0	17.39	6801.52			
31								
	1	-1254.96						
			.0	.00	.00			
			24.0	.00	.00			
	2	-284.76						
			.0	-.43	-11.23			
			24.0	-.43	-21.43			
	3	.00						
			.0	10.67	6801.52			
			24.0	10.67	7057.72			
32								
	1	-1263.44						
			.0	.00	.00			
			24.0	.00	.00			
	2	-284.76						
			.0	-.34	-21.43			
			24.0	-.34	-29.58			
	3	.00						
			.0	3.53	7057.72			
			24.0	3.53	7142.37			
33								
	1	-1271.92						
			.0	.00	.00			
			24.0	.00	.00			
	2	-284.76						
			.0	-.25	-29.58			
			24.0	-.25	-35.63			
	3	.00						
			.0	-3.54	7142.37			
			24.0	-3.54	7057.31			

OLIVE AVENUE AT AGUA FRIA RIVER, TRANSVERSE FRAME ANALYSIS, Q500 FLOW

F R A M E E L E M E N T F O R C E S

ELT ID	LOAD COND	AXIAL FORCE	DIST ENDI	1-2 PLANE SHEAR	1-2 PLANE MOMENT	1-3 PLANE SHEAR	1-3 PLANE MOMENT	AXIAL TORQ
34								
	1	-1280.40						
			.0	.00	.00			
			24.0	.00	.00			
	2	-284.76						
			.0	-.16	-35.63			
			24.0	-.16	-39.39			
	3	.00						
			.0	-10.93	7057.31			
			24.0	-10.93	6794.96			
35								
	1	-1288.88						
			.0	.00	.00			
			24.0	.00	.00			
	2	-284.76						
			.0	-.07	-39.39			
			24.0	-.07	-41.07			
	3	.00						
			.0	-17.36	6794.96			
			24.0	-17.36	6378.39			
36								
	1	-1297.37						
			.0	.00	.00			
			24.0	.00	.00			
	2	-284.76						
			.0	.02	-41.07			
			24.0	.02	-40.58			
	3	.00						
			.0	-23.73	6378.39			
			24.0	-23.73	5808.94			
37								
	1	-1305.85						
			.0	.00	.00			
			24.0	.00	.00			
	2	-284.76						
			.0	.10	-40.58			
			24.0	.10	-38.12			
	3	.00						
			.0	-29.08	5808.94			
			24.0	-29.08	5111.06			
38								
	1	-1314.33						
			.0	.00	.00			
			24.0	.00	.00			
	2	-284.76						
			.0	.17	-38.12			
			24.0	.17	-33.97			
	3	.00						
			.0	-33.14	5111.06			
			24.0	-33.14	4315.69			
39								
	1	-1322.81						

OLIVE AVENUE AT AGUA FRIA RIVER, TRANSVERSE FRAME ANALYSIS, Q500 FLOW

F R A M E E L E M E N T F O R C E S

ELT ID	LOAD COND	AXIAL FORCE	DIST ENDI	1-2 PLANE SHEAR	1-2 PLANE MOMENT	1-3 PLANE SHEAR	1-3 PLANE MOMENT	AXIAL TORQ
			.0	.00	.00			
			24.0	.00	.00			
	2	-284.76						
			.0	.23	-33.97			
			24.0	.23	-28.50			
	3	.00						
			.0	-35.68	4315.69			
			24.0	-35.68	3459.40			
40								
	1	-1331.29						
			.0	.00	.00			
			24.0	.00	.00			
	2	-284.76						
			.0	.26	-28.50			
			24.0	.26	-22.15			
	3	.00						
			.0	-36.38	3459.40			
			24.0	-36.38	2586.26			
41								
	1	-1339.77						
			.0	.00	.00			
			24.0	.00	.00			
	2	-284.76						
			.0	.28	-22.15			
			24.0	.28	-15.50			
	3	.00						
			.0	-34.93	2586.26			
			24.0	-34.93	1747.97			
42								
	1	-1348.26						
			.0	.00	.00			
			24.0	.00	.00			
	2	-284.76						
			.0	.26	-15.50			
			24.0	.26	-9.20			
	3	.00						
			.0	-30.99	1747.97			
			24.0	-30.99	1004.29			
43								
	1	-1356.74						
			.0	.00	.00			
			24.0	.00	.00			
	2	-284.76						
			.0	.22	-9.20			
			24.0	.22	-4.02			
	3	.00						
			.0	-24.23	1004.29			
			24.0	-24.23	422.70			
48								
	1	-1222.71						
			.0	-.82	-1.33			
			24.0	-.82	-20.99			

OLIVE AVENUE AT AGUA FRIA RIVER, TRANSVERSE FRAME ANALYSIS, Q500 FLOW

F R A M E E L E M E N T F O R C E S

ELT ID	LOAD COND	AXIAL FORCE	DIST ENDI	1-2 PLANE SHEAR	1-2 PLANE MOMENT	1-3 PLANE SHEAR	1-3 PLANE MOMENT	AXIAL TORQ
	2	-173.85						
			.0	2.48	33.89			
			24.0	2.48	93.51			
	3	-33.11						
			.0	24.40	5206.40			
			24.0	24.40	5792.04			
49								
	1	-1231.19						
			.0	-.76	-20.99			
			24.0	-.76	-39.29			
	2	-173.85						
			.0	2.30	93.51			
			24.0	2.30	148.80			
	3	-33.11						
			.0	21.38	5792.04			
			24.0	21.38	6305.15			
50								
	1	-1239.67						
			.0	-.66	-39.29			
			24.0	-.66	-55.12			
	2	-173.85						
			.0	1.98	148.80			
			24.0	1.98	196.30			
	3	-33.11						
			.0	16.06	6305.15			
			24.0	16.06	6690.64			
51								
	1	-1248.16						
			.0	-.53	-55.12			
			24.0	-.53	-67.90			
	2	-173.85						
			.0	1.58	196.30			
			24.0	1.58	234.17			
	3	-33.11						
			.0	9.61	6690.64			
			24.0	9.61	6921.19			
52								
	1	-1256.64						
			.0	-.39	-67.90			
			24.0	-.39	-77.35			
	2	-173.85						
			.0	1.14	234.17			
			24.0	1.14	261.57			
	3	-33.11						
			.0	2.74	6921.19			
			24.0	2.74	6986.88			
53								
	1	-1265.12						
			.0	-.25	-77.35			
			24.0	-.25	-83.43			
	2	-173.85						
			.0	.70	261.57			

OLIVE AVENUE AT AGUA FRIA RIVER, TRANSVERSE FRAME ANALYSIS, Q500 FLOW

F R A M E E L E M E N T F O R C E S

ELT ID	LOAD COND	AXIAL FORCE	DIST ENDI	1-2 PLANE SHEAR	1-2 PLANE MOMENT	1-3 PLANE SHEAR	1-3 PLANE MOMENT	AXIAL TORQ
			24.0	.70	278.40			
	3	-33.11						
			.0	-4.05	6986.88			
			24.0	-4.05	6889.63			
54								
	1	-1273.60						
			.0	-.10	-83.43			
			24.0	-.10	-85.89			
	2	-173.85						
			.0	.23	278.40			
			24.0	.23	283.90			
	3	-33.11						
			.0	-11.14	6889.63			
			24.0	-11.14	6622.35			
55								
	1	-1282.08						
			.0	.03	-85.89			
			24.0	.03	-85.11			
	2	-173.85						
			.0	-.19	283.90			
			24.0	-.19	279.27			
	3	-33.11						
			.0	-17.29	6622.35			
			24.0	-17.29	6207.36			
56								
	1	-1290.56						
			.0	.17	-85.11			
			24.0	.17	-80.99			
	2	-173.85						
			.0	-.63	279.27			
			24.0	-.63	264.23			
	3	-33.11						
			.0	-23.38	6207.36			
			24.0	-23.38	5646.21			
57								
	1	-1299.05						
			.0	.30	-80.99			
			24.0	.30	-73.90			
	2	-173.85						
			.0	-1.01	264.23			
			24.0	-1.01	240.00			
	3	-33.11						
			.0	-28.48	5646.21			
			24.0	-28.48	4962.59			
58								
	1	-1307.53						
			.0	.40	-73.90			
			24.0	.40	-64.35			
	2	-173.85						
			.0	-1.32	240.00			
			24.0	-1.32	208.22			
	3	-33.11						

OLIVE AVENUE AT AGUA FRIA RIVER, TRANSVERSE FRAME ANALYSIS, Q500 FLOW

F R A M E E L E M E N T F O R C E S

ELT ID	LOAD COND	AXIAL FORCE	DIST ENDI	1-2 PLANE SHEAR	1-2 PLANE MOMENT	1-3 PLANE SHEAR	1-3 PLANE MOMENT	AXIAL TORQ
			.0	-32.34	4962.59			
			24.0	-32.34	4186.40			
59								
	1	-1316.01						
			.0	.47	-64.35			
			24.0	.47	-52.97			
	2	-173.85						
			.0	-1.56	208.22			
			24.0	-1.56	170.87			
	3	-33.11						
			.0	-34.73	4186.40			
			24.0	-34.73	3352.98			
60								
	1	-1324.49						
			.0	.52	-52.97			
			24.0	.52	-40.52			
	2	-173.85						
			.0	-1.69	170.87			
			24.0	-1.69	130.36			
	3	-33.11						
			.0	-35.34	3352.98			
			24.0	-35.34	2504.86			
61								
	1	-1332.97						
			.0	.52	-40.52			
			24.0	.52	-27.96			
	2	-173.85						
			.0	-1.69	130.36			
			24.0	-1.69	89.74			
	3	-33.11						
			.0	-33.88	2504.86			
			24.0	-33.88	1691.79			
62								
	1	-1341.45						
			.0	.48	-27.96			
			24.0	.48	-16.39			
	2	-173.85						
			.0	-1.55	89.74			
			24.0	-1.55	52.48			
	3	-33.11						
			.0	-30.02	1691.79			
			24.0	-30.02	971.36			
63								
	1	-1349.94						
			.0	.39	-16.39			
			24.0	.39	-7.06			
	2	-173.85						
			.0	-1.25	52.48			
			24.0	-1.25	22.54			
	3	-33.11						
			.0	-23.45	971.36			
			24.0	-23.45	408.53			

OLIVE AVENUE AT AGUA FRIA RIVER, LONGITUDINAL FRAME ANALYSIS, Q500 FL

F R A M E E L E M E N T F O R C E S

ELT ID	LOAD COND	AXIAL FORCE	DIST ENDI	1-2 PLANE SHEAR	1-2 PLANE MOMENT	1-3 PLANE SHEAR	1-3 PLANE MOMENT	AXIAL TORQ
1								
	1	.00						
			.0	.00	.00			
			52.7	.00	.00			
			76.7	1.07	25.68			
			100.7	2.00	73.68			
			124.7	2.79	140.64			
			148.7	3.44	223.20			
2								
	1	.00						
			.0	3.95	223.20			
			24.0	3.95	318.00			
			48.0	4.32	421.68			
			72.0	4.38	526.80			
			105.1	4.41	672.86			
3								
	1	.00						
			.0	4.41	672.86			
			348.0	4.41	2207.54			
4								
	1	.00						
			.0	4.41	2207.54			
			24.0	4.41	2313.38			
5								
	1	.00						
			.0	3.29	2313.38			
			24.0	3.29	2392.28			
6								
	1	.00						
			.0	1.41	2392.28			
			24.0	1.41	2426.22			
7								
	1	.00						
			.0	-.73	2426.22			
			24.0	-.73	2408.70			
8								
	1	.00						
			.0	-2.86	2408.70			
			24.0	-2.86	2339.97			
9								
	1	.00						
			.0	-4.82	2339.97			
			24.0	-4.82	2224.35			
10								
	1	.00						
			.0	-6.68	2224.35			
			24.0	-6.68	2063.99			
11								
	1	.00						
			.0	-8.13	2063.99			
			24.0	-8.13	1868.75			

OLIVE AVENUE AT AGUA FRIA RIVER, LONGITUDINAL FRAME ANALYSIS, Q500 FL

F R A M E E L E M E N T F O R C E S

ELT ID	LOAD COND	AXIAL FORCE	DIST END1	1-2 PLANE SHEAR	1-2 PLANE MOMENT	1-3 PLANE SHEAR	1-3 PLANE MOMENT	AXIAL TORQ
12								
	1	.00						
			.0	-9.38	1868.75			
			24.0	-9.38	1643.52			
13								
	1	.00						
			.0	-10.24	1643.52			
			24.0	-10.24	1397.88			
14								
	1	.00						
			.0	-10.66	1397.88			
			24.0	-10.66	1142.00			
15								
	1	.00						
			.0	-10.65	1142.00			
			24.0	-10.65	886.48			
16								
	1	.00						
			.0	-10.16	886.48			
			24.0	-10.16	642.64			
17								
	1	.00						
			.0	-9.22	642.64			
			24.0	-9.22	421.29			
18								
	1	.00						
			.0	-7.78	421.29			
			24.0	-7.78	234.56			
19								
	1	.00						
			.0	-5.82	234.56			
			24.0	-5.82	94.97			
20								
	1	.00						
			.0	-2.64	94.97			
			36.0	-2.64	.00			

STRUCTURAL CALCULATIONS

FOR

CAMELBACK ROAD BRIDGE

AT

AGUA FRIA RIVER

Registered Professional Engineer (Structural)
CERTIFICATE NO.
14766
ROBERT DAVIS
TURTON
Date Signed 7/9/96
ARIZONA, U.S.A.

Cannon & Associates, Inc.
Consulting Engineers

project no. : 94046-1
project : Camelback Rd Bridge
designed by : HM
checked by : TB
date : 5/96 sht. 1 of 21

BASIS OF ANALYSIS

DESIGN SPECIFICATION

American Association of State Highway and Transportation Officials Standard Specifications for Highway Bridges, 1992 Edition, revised to date.

EXISTING BRIDGE PLANS

As-built bridge plans dated June 17, 1985. Camelback Road Bridge over Agua Fria River, Project No. 68104.

GEOTECHNICAL INVESTIGATION

Geotechnical Investigation Report by AGRA Earth & Environmental, Inc., Job No. E95-36, dated 4/15/96. Ultimate downward capacity of driven pile foundations were used with a safety factor of 1.0 under critical flow conditions.

HYDRAULIC DATA

Final Scour Analysis Report by Morrison-Maierle/CSSA, Inc. Dated March 1996.
Q_{500} = 184,000 cfs, Average velocity = 11.6 ft/sec., Angle of attack = 15 degrees
H.W. Elev. = 1026.45 (Bridge open to traffic)
Total Scour = 40'

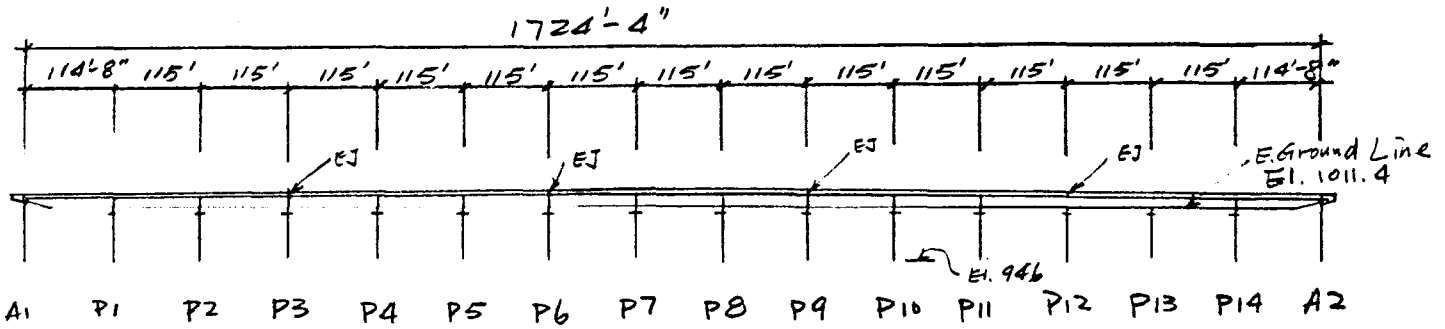

Section at Construction ℄

15 - Span Prestressed Concrete Girder Bridge

0° skew

Cannon & Associates, Inc.
Consulting Engineers

project no. : 94046-1
project : Camelback Rd Bridge
designed by : HM
checked by : TB
date : 5/96 sht. 3 of 21

Pier Analysis

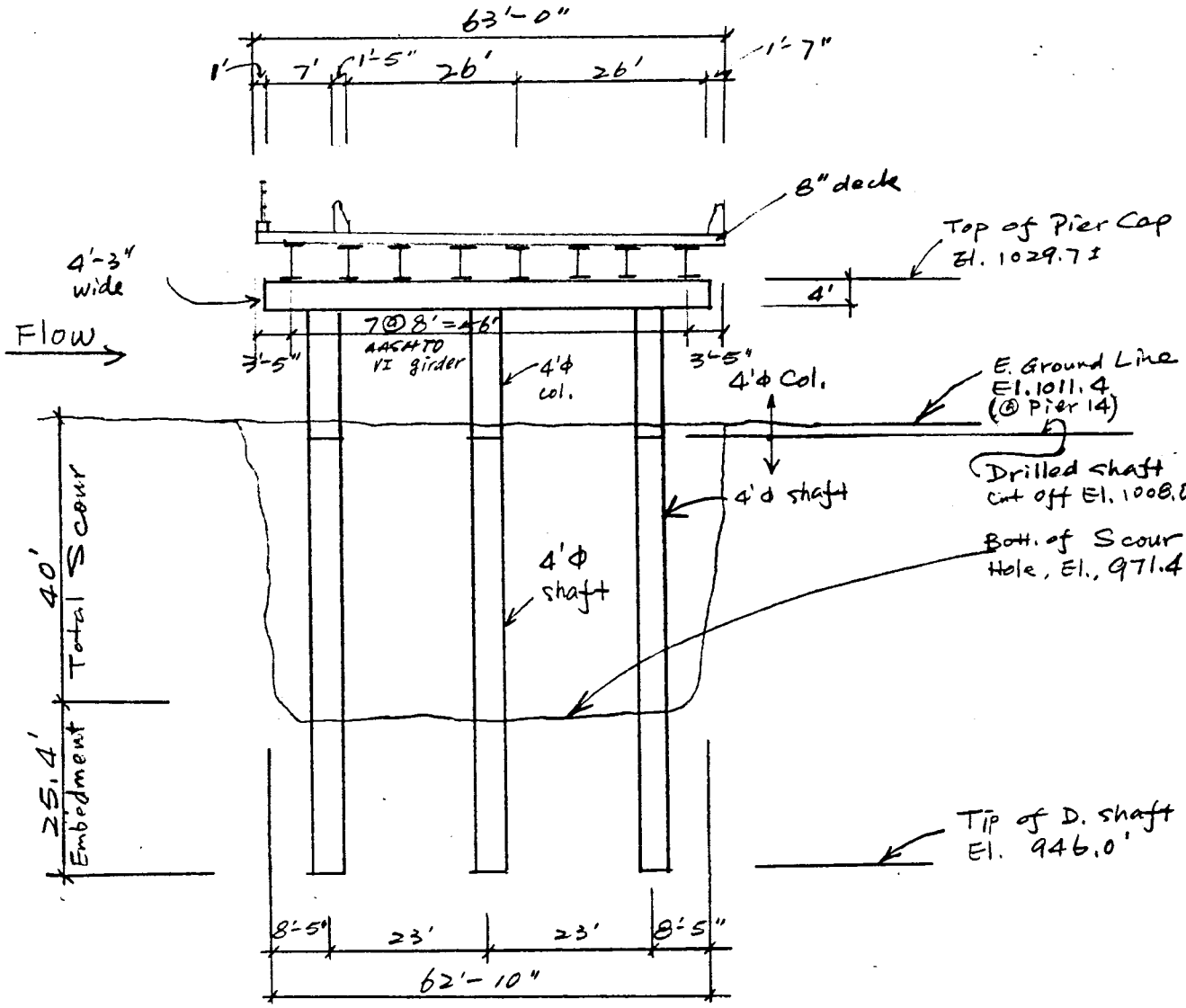

Pier Elevation

Pier Analysis (CONT.)

Dead Load Superstructure (Bridge has no overlay)

Deck slab: $(8''/12)(63')(0.15^{k/ft^3})$	$= 6.3^{k/'}$
Barrier: $2(0.4^{k/'})$	$= 0.8^{k/'}$
Pedestrian Fence: (include conc. pedestal)	$= 0.1$
Conc. Buid-Up, (at top of girder): $(3''/12)(42''/12)(8)(0.15)$	$= 1.05$
AASHTO VI Girder: $(1085/144)(8)(0.15^{k/ft^3})$	$= 9.04$
Intermediate Diaphragm: $[(64''/12)56' - 7(\frac{1085}{144})](9''/12)(0.15^{k/ft^3})(2)(\frac{1}{115'})$ (Dia No.; Assumed)	$= 0.48^{k/'}$
Misc:	$= 0.03^{k/'}$
	$17.8^{k/'}$

Pier Load

Dead Load:

Max. Supperstructure Reaction: $17.8^{k/'}(115')$	$= 2047^k$
Pier Cap: $4' \times 4.25' \times 62.83' \times 0.15^{k/ft^3}$	$= 160.2^k$
Diaphragm @ Pier: $[(6')56' - 7(\frac{1085}{144})](9''/12)(0.15^{k/ft^3})(2)$ (Assumed; No.)	$= 63.7^k$
	2270.9^k

Approx. Dead Load per shaft:

$$2270.9/3_{shaft} + [17.7'(\pi \cdot \frac{4^2}{4}) + 36.6'(\pi \cdot \frac{4^2}{4})](0.15^{k/ft^3}) = 859.3^{k/shaft}$$

Live Load HS20, 4 lanes, per continuous beam analysis.

Max. LL reaction $= 114.4^{k/lane} \cdot (4\ lanes)(0.75) = 343.2^k$ (LL reduction)

Approax. LL per shaft $= 343.2^k / 3\ shafts = 114.4^k/shaft$

Check Capacity of shafts based on Soil Capacity

Service Dead Load $= 859.3^k$
Service Live Load $= 114.4^k$
$\Big\}\ 973.9^k$

Ultimate Capacity $= 1223^k > 973.9^k$ O.K.
(see AGRA chart, cht. 7)

∴ Check Lateral Stability.

Pier Analysis (CONT.)

check if shaft is flexible or rigid: (soil: sand)

$$n_h = \left(\frac{170\text{ pci} - 74\text{ pci}}{25' - 5'}\right)(4') = 19.2\ \#/in^3$$

slope of "k" per AGRA chart at sht 21
Based on ½" Deflection curve;

$D = 4'$

$$EI = \frac{(E_c)(I_g)}{1 + 0.0} = 939{,}376{,}480$$

use $\beta_d = 0.0$

$f'_c = 4000$ psi
$E_c = 3605$ ksi
$I_g = \frac{1}{64}(\pi)(48)^4 = 260576\ in^4$

$$\eta = \sqrt[5]{\frac{n_h}{EI}} = \sqrt[5]{\frac{19.2/1000}{939376480}} = 0.00728$$

$$\eta L = (0.00728)(25.4)(12\text{"}/') = 2.2 > 2.0$$

∴ Consider as flexible pile.

Pier Analysis (CONT.)

Project Camelback Road Bridge Job No. E95-36

FIGURE 3

ESTIMATED ULTIMATE DOWNWARD CAPACITY OF STRAIGHT, DRILLED, CAST-IN-PLACE CONCRETE PIERS

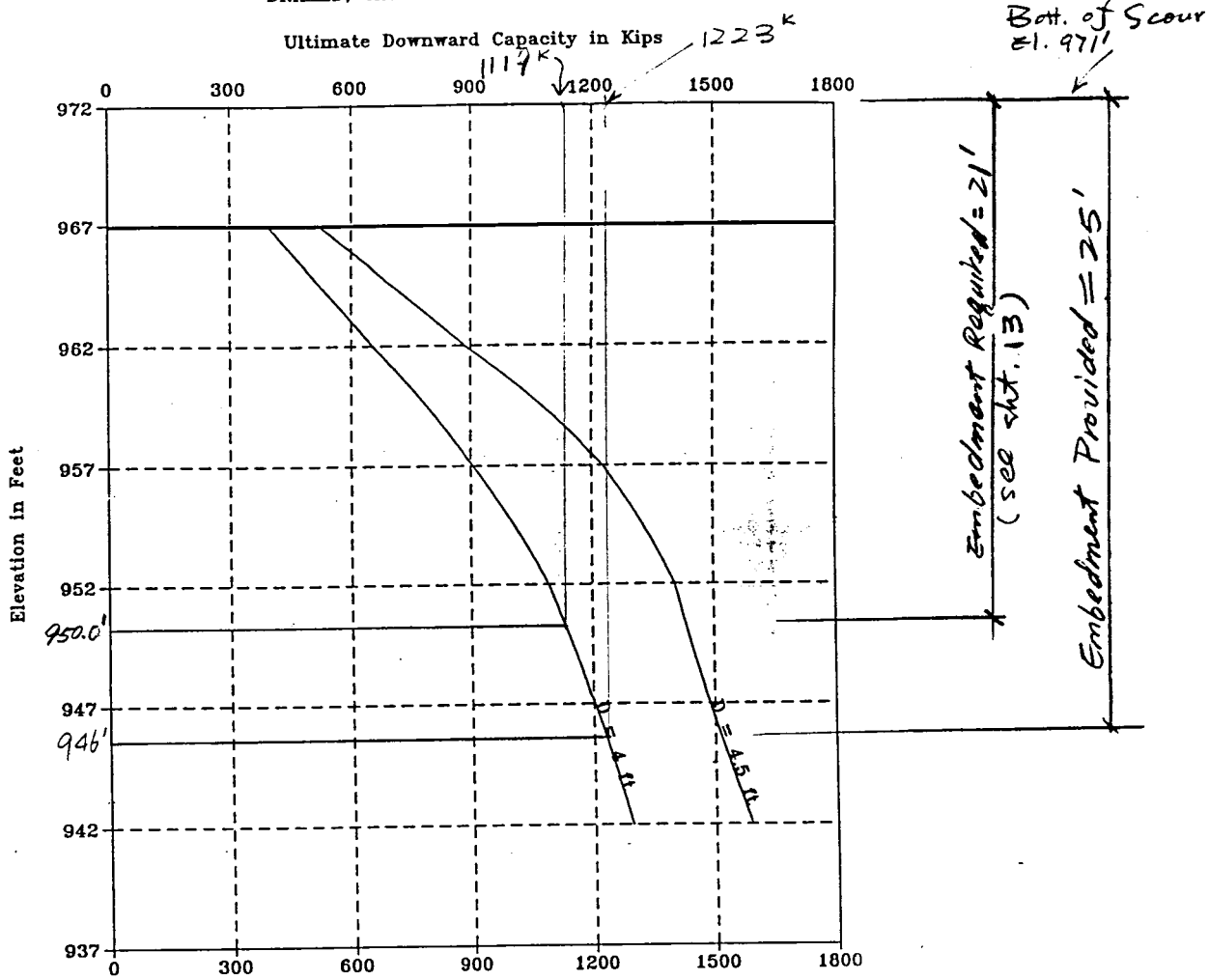

AGRA
Earth & Environmental, Inc.

B-3

Reference: Geotechnical Investigation Report by AGRA Earth & Environmental, Inc., Job No. E95-36, dated 4/15/96

Cannon & Associates, Inc.
Consulting Engineers

project no.: 94046-1
project: Camelback Rd Bridge
designed by: HM
checked by: TB
date: 5/96 sht. 7 of 21

Pier Analysis (cont.)

DL per Girder

$(2047^k + 63.7^k)/8_{girder} = 263.84^k/girder$, use $264^k/girder$

LL Girder Reaction:

4 lanes, HS20.

Impact — Reduction Factor for multi. lanes

Wheel Load $= 114.4^k/lane\,(\frac{1}{2})(1.21)(0.75) = 51.9^k$

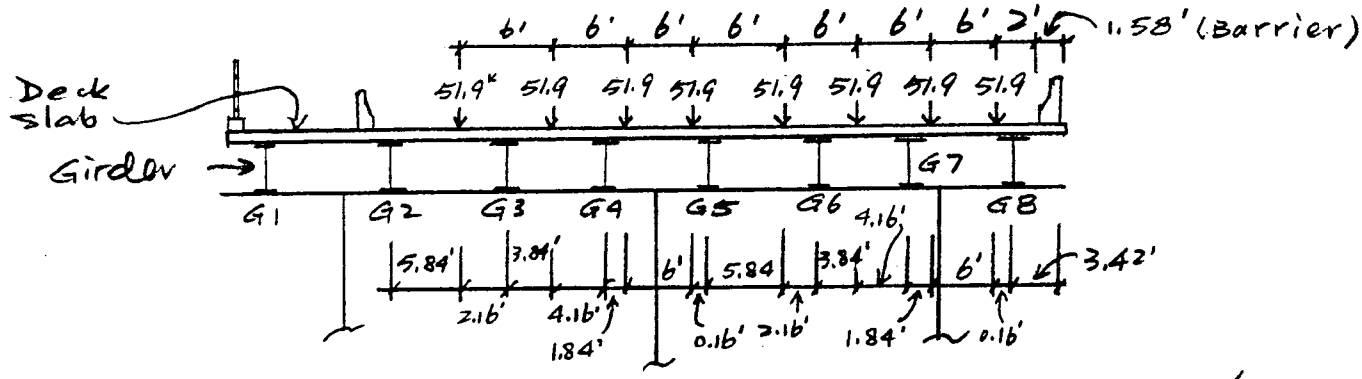

$G1 = 0$

$G2 = 51.9\,(2.16/8) = 14.01^k$

$G3 = 51.9\,(\frac{5.84+4.16}{8}) = 64.88^k$

$G4 = 51.9\,(\frac{3.84+6.16+0.16}{8}) = 65.91^k$

$G5 = 51.9\,(\frac{1.84+7.84+2.16}{8}) = 76.82^k$

$G6 = 51.9\,(\frac{5.84+4.16}{8}) = 64.88^k$

$G7 = 51.9\,(\frac{3.84+6.16+0.16}{8}) = 65.91^k$

$G8 = 51.9\,(\frac{7.84+1.84}{8}) = 62.81^k$

DL & LL per Girder

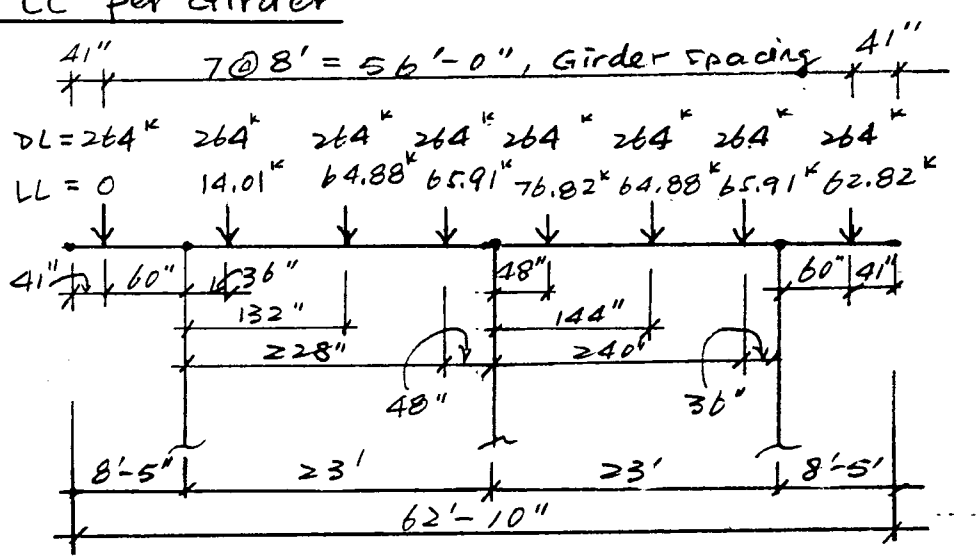

Pier Analysis (CONT.)

Stream Flow Forces (Q500 Flow Condition)

H.W. Elev. = 1026.45'
Avg. of Velocity = 11.6 ft/sec.
Angle of Attack = 15°, use 20° for analysis (Attack + 5°)
Total Scour 40'

Stream Force Criteria

- Pile clear spacing = 19' > 16', ∴ Assume each D. shaft carries stream force independently. Use abstruction width based on shaft diameter with 2' of debris each side of shaft.
- Assume stream force on pier cap is equally distributed to each shaft.
- Use K = 1.4 for shafts with debris at first 12' from H.W. Elev.
- Use K = 0.7 for round shaft without debris.

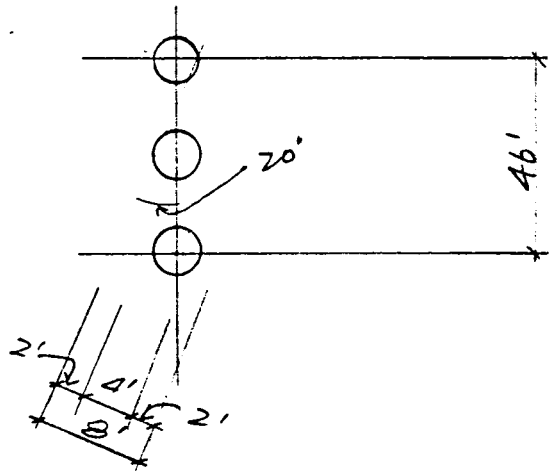

Projected Width: (@ Col.)
4' + 2(2') = 8'

Projected Width (@ Cap)
62.83'(sin 20°) + (2')(2)
= 25.48'

Pier Analysis (CONT.)

Stream Flow (CONT.)

$$P_{max.} = 2\,P_{avg.} = 2\left[1.4(11.6)^2\right]/1000 = 0.377 \ ^{k}/_{ft^2}$$

$$\Delta P = 0.377/(1026.45 - 1011.4) = 0.025 \ ^{KSF}/_{'}$$

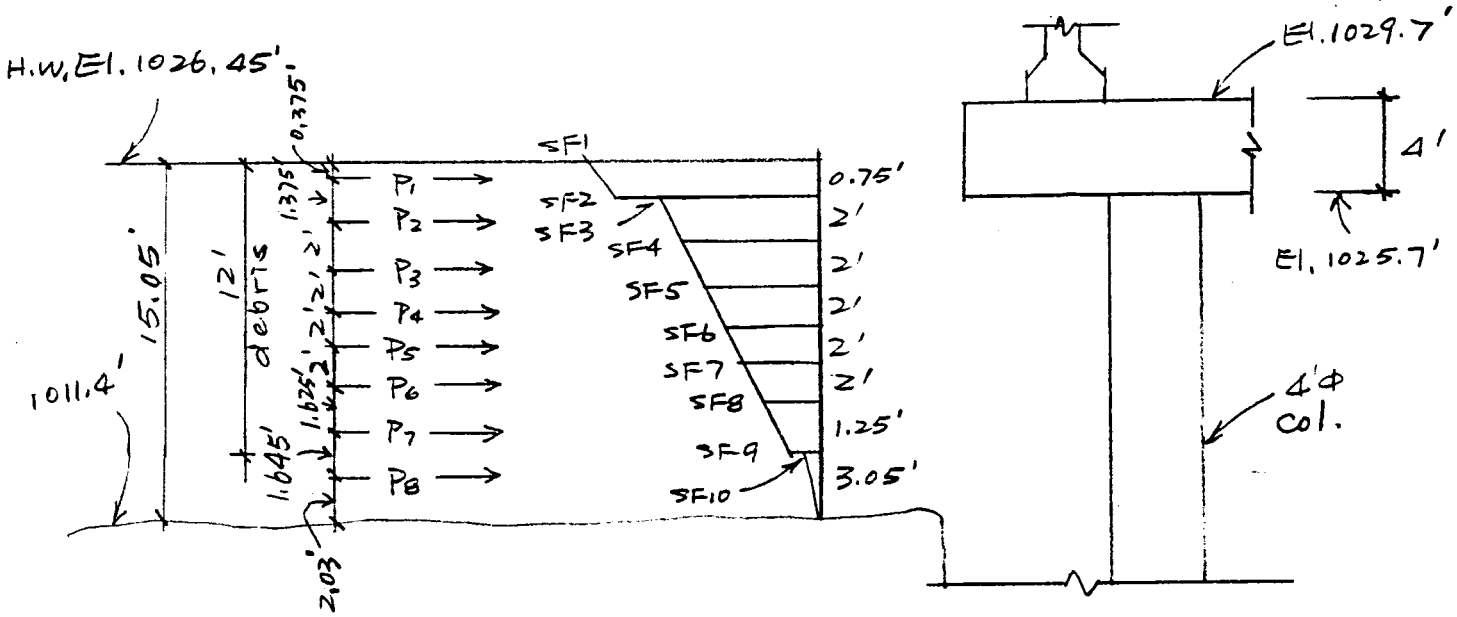

SF1 = 0.377(25.48)	= 9.61 $^{k}/_{'}$
SF2 = [0.377 − 0.75(0.025)](25.48')	= 9.13
SF3 = [0.377 − 0.75(0.025)](8')	= 2.866
SF4 = [0.377 − 2.25(0.025)](8')	= 2.466
SF5 = [0.377 − 4.25(0.025)](8')	= 2.066
SF6 = [0.377 − 6.25(0.025)](8')	= 1.666
SF7 = [0.377 − 8.25(0.025)](8')	= 1.266
SF8 = [0.377 − 10.25(0.025)](8')	= 0.866
SF9 = [0.377 − 12(0.025)](8')	= 0.616
SF10 = [0.377 − 12(0.025)](0.7/1.4)(8')	= 0.308

Pier Analysis (CONT.)

Stream Flow (CONT.)

Equivalant Concentrated Loads from Stream Force (Per Column):

$P_1 = (9.61 + 9.13)(\frac{1}{2})(0.25)/3$ col. $= 2.34^k$/col.
$P_2 = (2.866 + 2.466)(\frac{1}{2})(2')$ $= 5.33^k$
$P_3 = (2.466 + 2.066)(\frac{1}{2})(2')$ $= 4.53^k$
$P_4 = (2.066 + 1.666)(\frac{1}{2})(2')$ $= 3.73$
$P_5 = (1.666 + 1.266)(\frac{1}{2})(2')$ $= 2.93$
$P_6 = (1.266 + 0.866)(\frac{1}{2})(2')$ $= 2.13$
$P_7 = (0.866 + 0.616)(\frac{1}{2})(1.25')$ $= 1.25$
$P_8 = (0.308 + 0)(\frac{1}{2})(3.05')$ $= 0.47^k$

Resolve total stream forces into longitudinal and transverse directions:

Transverse Direction: $\cos 20° = 0.940$
Longitudinal Direction: $\sin 20° = 0.342$

$P_{1T} = 2.34(0.94)$	$= 2.20^k$/col.	$P_{1L} = 0.8^k$/col.
$P_{2T} = 5.33(0.94)$	$= 5.01^k$	$P_{2L} = 1.82$
$P_{3T} = 4.53(0.94)$	$= 4.26^k$	$P_{3L} = 1.55$
$P_{4T} = 3.73(0.94)$	$= 3.51^k$	$P_{4L} = 1.28$
$P_{5T} = 2.93(0.94)$	$= 2.75^k$	$P_{5L} = 1.00$
$P_{6T} = 2.13(0.94)$	$= 2.0^k$	$P_{6L} = 0.73$
$P_{7T} = 1.25(0.94)$	$= 1.18^k$	$P_{7L} = 0.42$
$P_{8T} = 0.47(0.94)$	$= 0.44^k$	$P_{8L} = 0.16^k$

Pier Analysis (CONT.)

Stream Flow (CONT.)

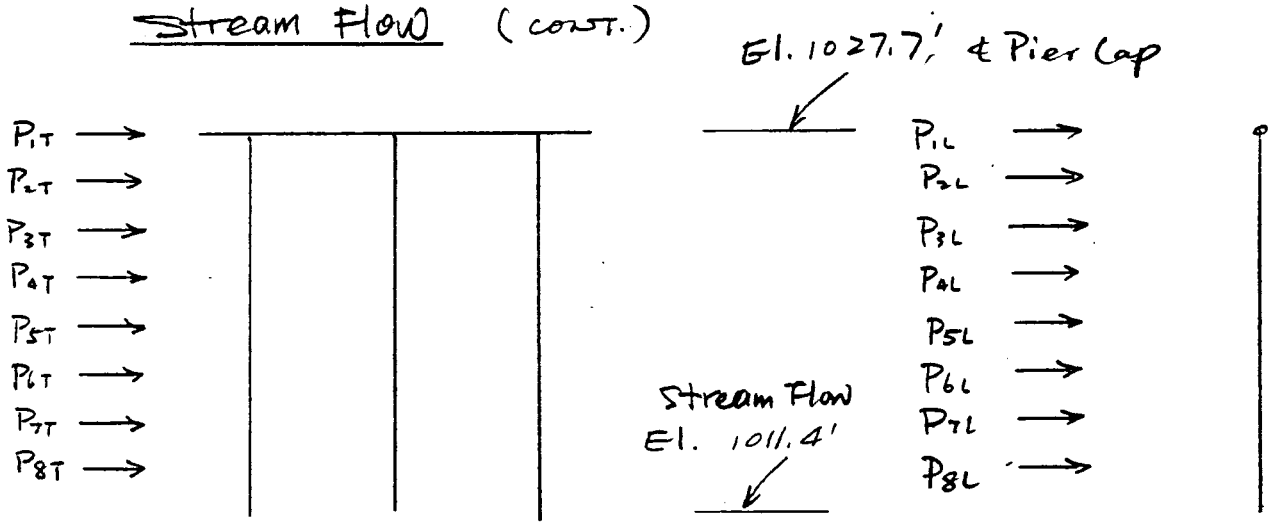

Transverse Direction
(Loads Per Shaft)

Longitudinal Direction
(Loads per shaft)

See Computer Analysis (sheet 17) for Computer Models AND RESULTS.

Check Vertical Capacity of Drilled Shaft Based on Soil Strength

$$\underbrace{P_T}_{\text{Center column at scour line}} = \underset{DL}{946} + \underset{L\%I}{208/1.21} + \underset{SF}{1^K} = 1119^K$$

Drilled Shaft tip elevation 946.0'

Ultimate Shaft Capacity = $1223^K > 1119^K$
(based on AGRA Chart w/ Safety Factor = 1.0)

OK

Embedment Depth Provided = 25'
Embedment Depth Required = 21'
} see AGRA Chart sheet 7

LOAD GROUPS

Use Group VII (without Earthquake) plus L+I

$$1.3\left[\beta_d(D) + 1.0(L+I) + 1.0E^{\circ} + 1.0B^{\circ} + 1.0SF\right]$$

Top of Column (Member 35)

$\beta_d = 1.0$

$$P_U = 1.3\left[1.0(719^k) + 1.0(166^k) + 51^k\right] = 1217^k$$
$$M_{U_T} = 1.3\left[1.0(27'^k) + 1.0(18'^k) + 762\right] = 1049'^k$$
$$M_{U_L} = 1.3\left[1.0(0) + 1.0(0) + 0\right] = 0$$

$\beta_d = 0.75$ (w/o L+I)

$$P_U = 1.3\left[0.75(719^k) + 1.0(0) + 51^k\right] = 767^k$$
$$M_{U_T} = 1.3\left[0.75(27) + 1.0(0) + 762\right] = 1017'^k$$
$$M_{U_L} = \underline{\quad} = 0$$

Bottom of Column (Pt. of Max Moment – Member 39)

$\beta_d = 1.0$

$$P_U = 1.3\left[1.0(832^k) + 1.0(166^k) + 51^k\right] = 1364^k$$
$$M_{U_T} = 1.3\left[1.0(8'^k) + 1.0(8'^k) + 634\right] = 845'^k$$
$$M_{U_L} = 1.3\left[1.0(0) + 1.0(0) + 2078'^k\right] = 2701'^k$$

$\beta_d = 0.75$ (w/o L+I)

$$P_U = 1.3\left[0.75(832) + 1.0(0) + 51^k\right] = 878^k$$
$$M_{U_T} = 1.3\left[0.75(8) + 1.0(0) + 634\right] = 832'^k$$
$$M_{U_L} = 1.3\left[0.75(0) + 1.0(0) + 2078\right] = 2701'^k$$

Check Structural Capacity of Column / Drilled Shaft

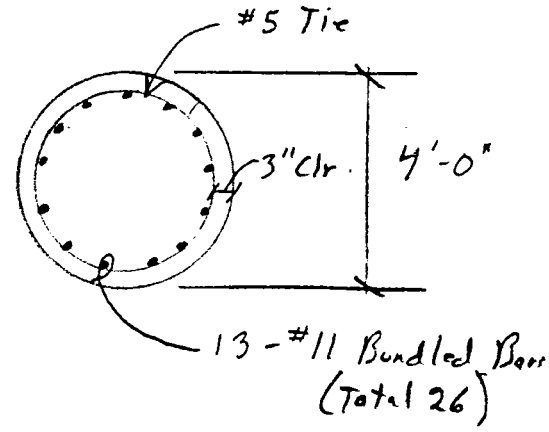

ULTIMATE STRENGTH DESIGN
OF
REINFORCED CONCRETE COLUMNS

CODER : KB
CHECKER : C
DATE : 7- 2-96
JOB IDENTIFICATION : AMELBACK ROAD BRIDGE

DATA USED
**** ****
ANALYSIS OF ROUND COLUMN - SIZE : DIAMETER = 48.00 IN.
STRESSES : FC' = 4.000 K.S.I. FC = 3.400 K.S.I. FY = 60.000 K.S.I.
E-CONC. = 3834. K.S.I. E-STEEL = 29000. K.S.I.
MAX. CONC. STRAIN (EU) = .003
CAPACITY REDUCTION FACTORS :
COMPRESSION = .70 FLEXURE = .90

REINFORCEMENT DATA : CIRCULAR REINFORCEMENT PATTERN

WITH- 26 NO. 11 BARS AST= 40.56 SQ.IN. = 2.25PCT. COVER= 3.62 IN.
BAR SPACING = 4.75 IN.
OUTPUT
******

LOAD	APPLIED LOADS			COMPUTED STRENGTH			
CASE	AP	AMX	AMY	UP	UMX	UMY	UP/AP
1	1217.	1049.	0.	3108.	2682.	0.	2.555
2	767.	1017.	0.	2287.	3018.	0.	2.973
3	1364.	845.	2701.	1524.	944.	3017.	1.117
4	878.	832.	2701.	932.	885.	2873.	1.064

> 1.0 O.K.

Pier Analysis (CONT.)

Summary of Results

The Piers Are Vertically and Laterally Stable For Q500 Stream Flow Conditions.

COMPUTER ANALYSIS

Computer Model

Use a three dimensional frame analysis to model the piers. Include the P-delta effects.

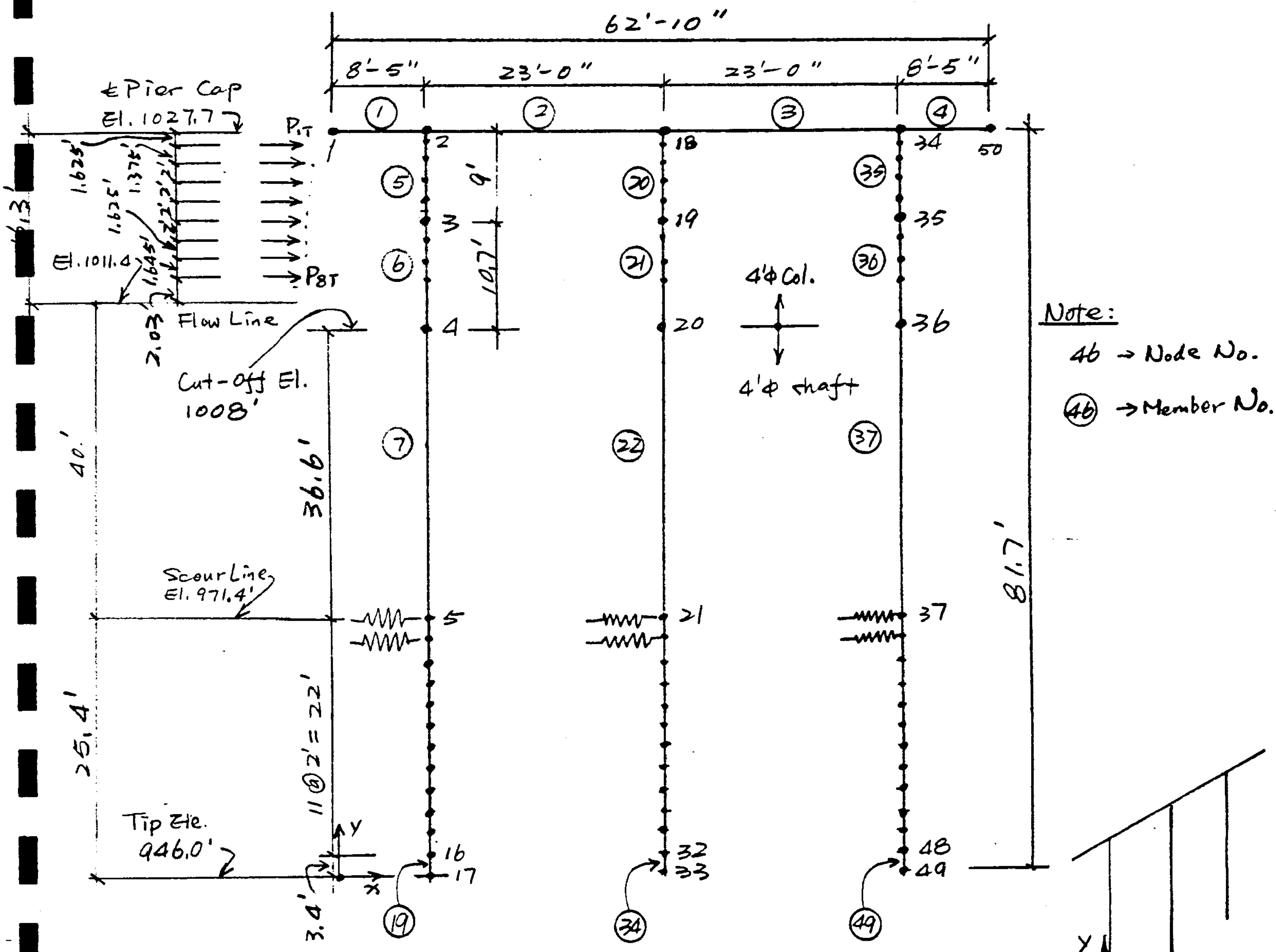

Pier Frame Model w/ Transverse Loads

$I_{cap} = \frac{1}{12}(51)(48)^3 = 470016 \text{ in}^4$, $A_{cap} = (51)(48) = 2448 \text{ in}^2$, $E_{cap} = 57\sqrt{4000} = 3605^{ks}$

$0.4 I_{g.col.} = 0.4(\frac{\pi}{64})(48)^4 = 104230 \text{ in}^4$, $A_{col.} = 1809 \text{ in}^2$, $\omega = 0.157$ k/" $E_{col.} = 3605$ ksi

$0.4 I_{g.shaft} = 0.4(\frac{\pi}{64})(48)^4 = 104230 \text{ in}^4$, $A_{shaft} = 1809 \text{ in}^2$, $\omega = 0.157$ k/", $E_{shaft} = 3605$ ksi

Computer Models (CONT.)

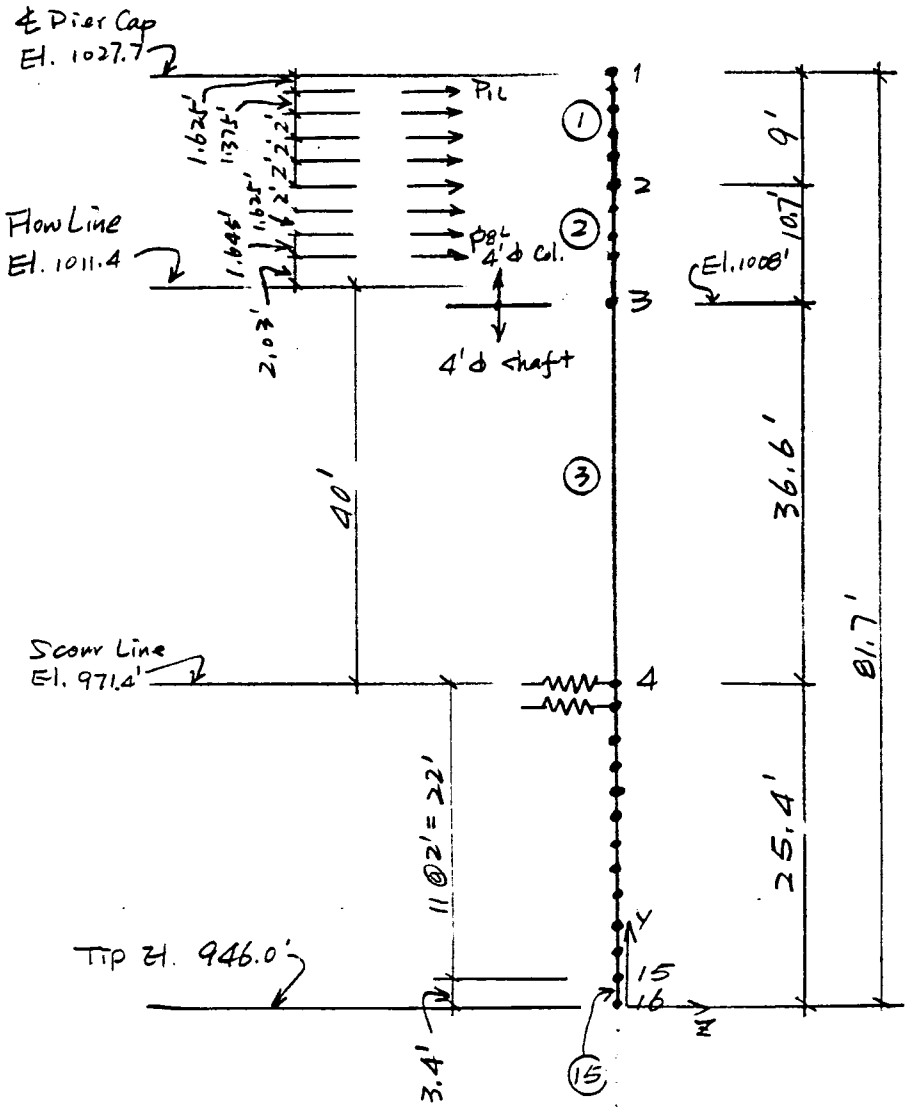

Pier Frame Model w/ Longitudinal Loads

Computer Models

Spring Constants

Based on Lateral Subgrade Modulus (K) provided by AGRA charts. Spring Constant = K(shaft ϕ)(Node spacing)
= K(48")(24")

½" Deflection Curve Reference: AGRA chart, Sheet 21

Depth below Scour Line (ft)	Subgrade modulus (pci) K	Spring Constant K/in
0	0	0 K/"
2	21	24.2
4	42	48.4
6	63	72.5
8	84	96.8
10	105	121.0
12	106	122.1
14	107	123.3
16	113	130.1
18	121	139.4
20	129	148.6
22	147	228.6
25.4'	178	174.7

Pier Analysis (CONT.)

Figure 14 - Camelback Road
4.5-Foot Diameter

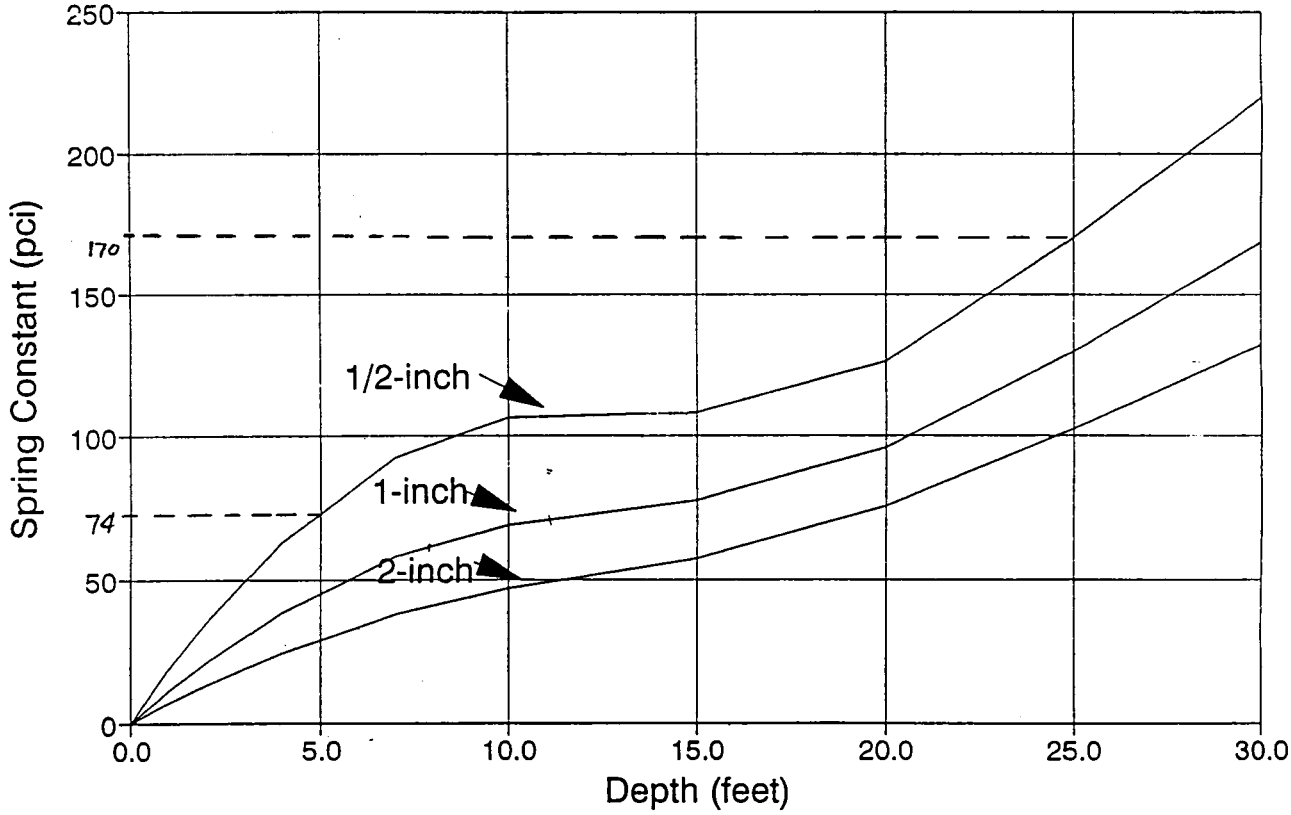

Reference: Geotechnical Investigation Report by AGRA Earth & Environmental, Inc., Job No. E95-36, dated 4/15/96

Cannon & Associates, Inc.
Consulting Engineers

project no. : 94046-1
project : Camelback Rd Bridge
designed by : HM
checked by : TB
date : 5/96 sht. 21 of 21

CAMELBACK RD BRIDGE AT AGRA FRIA RIVER, TRANSVERSE FRAME, Q500 FLOW

F R A M E E L E M E N T F O R C E S

ELT ID	LOAD COND	DIST ENDI	1-2 PLANE SHEAR	1-2 PLANE MOMENT	AXIAL FORCE	1-3 PLANE SHEAR	1-3 PLANE MOMENT	AXIAL TORQ
1	----------							
	ACTING P-DELTA AXIAL FORCE:				.000			
	1	.000			.000			
		.000	.000	.000				
		41.000	-272.733	-179.109				
		101.000	-285.513	-16926.406				
		101.000			.000			
	2	.000			.000			
		.000	.000	.000				
		101.000	.000	.000				
		101.000			.000			
	3	.000			.000			
		.000	.000	.000		.000	.000	
		101.000	.000	.000		.000	.000	
		101.000			.000			
2	----------							
	ACTING P-DELTA AXIAL FORCE:				-.478			
	1	.000			-.589			
		.000	433.050	-17256.723				
		36.001	161.382	-1804.806				
		132.001	-123.066	12706.143				
		228.001	-407.514	-89.920				
		276.000	-417.738	-19895.624				
		276.000			-.589			
	2	.000			-.514			
		.000	42.226	-301.211				
		36.001	28.216	1218.942				
		132.001	-36.664	3927.604				
		228.001	-102.574	407.781				
		276.000	-102.574	-4515.699				
		276.000			-.514			
	3	.000			.625			
		.000	-50.972	9218.351		-1.408	.000	
		276.000	-50.972	-4850.011		-1.408	-390.755	
		276.000			.625			
3	----------							
	ACTING P-DELTA AXIAL FORCE:				-.442			
	1	.000			-.588			
		.000	417.749	-19895.043				
		48.001	143.525	-88.339				
		144.001	-140.923	12708.337				

CAMELBACK RD BRIDGE AT AGRA FRIA RIVER, TRANSVERSE FRAME, Q500 FLOW

F R A M E E L E M E N T F O R C E S

ELT ID	LOAD COND	DIST ENDI	1-2 PLANE SHEAR	1-2 PLANE MOMENT	AXIAL FORCE	1-3 PLANE SHEAR	1-3 PLANE MOMENT	AXIAL TORQ
		240.001	-425.371	-1801.997				
		276.000	-433.039	-17253.021				
		276.000			-.588			
	2	.000			-.395			
		.000	104.803	-4454.379				
		48.001	27.983	576.165				
		144.001	-36.897	3262.431				
		240.001	-102.807	-279.785				
		276.000	-102.807	-3980.771				
		276.000			-.395			
	3	.000			.540			
		.000	-50.621	4824.755		1.423	-390.755	
		276.000	-50.621	-9146.707		1.423	.000	
		276.000			.540			
4	----------							
	ACTING P-DELTA AXIAL FORCE:				.000			
	1	.000			.000			
		.000	285.513	-16926.407				
		60.000	8.733	-179.024				
		101.000	.000	.000				
		101.000			.000			
	2	.000			.000			
		.000	62.810	-3768.600				
		60.000	.000	.000				
		101.000	.000	.000				
		101.000			.000			
	3	.000			.000			
		.000	.000	.000		.000	.000	
		101.000	.000	.000		.000	.000	
		101.000			.000			
5	----------							
	ACTING P-DELTA AXIAL FORCE:				-718.294			
	1	.000			-718.563			
		.000	-.589	330.317				
		108.000	-.589	278.817				
		108.000			-735.519			
	2	.000			-42.226			
		.000	-.514	301.211				
		108.000	-.514	261.238				
		108.000			-42.226			
	3	.000			50.972			

CAMELBACK RD BRIDGE AT AGRA FRIA RIVER, TRANSVERSE FRAME, Q500 FLOW

F R A M E E L E M E N T F O R C E S

ELT ID	LOAD COND	DIST ENDI	1-2 PLANE SHEAR	1-2 PLANE MOMENT	AXIAL FORCE	1-3 PLANE SHEAR	1-3 PLANE MOMENT	AXIAL TORQ
		.000	.625	-9218.351		1.408	.000	
		19.500	2.825	-9197.215		2.208	306.956	
		36.000	7.835	-9137.790		4.028	579.724	
		60.000	12.095	-8922.723		5.578	1019.551	
		84.000	15.605	-8595.703		6.858	1495.418	
		108.000	15.605	-8174.995		6.858	2000.349	
		108.000			50.972			
6	----------							
	ACTING P-DELTA AXIAL FORCE:				-736.852			
	1	.000			-735.519			
		.000	-.589	278.817				
		128.400	-.589	209.783				
		128.400			-755.678			
	2	.000			-42.226			
		.000	-.514	261.238				
		128.400	-.514	206.512				
		128.400			-42.226			
	3	.000			50.972			
		.000	18.355	-8174.995		7.858	2000.349	
		24.000	20.355	-7677.766		8.588	2535.848	
		43.500	21.535	-7228.364		9.008	2983.085	
		63.240	21.975	-6744.674		9.168	3441.845	
		128.400	21.975	-5084.972		9.168	4946.011	
		128.400			50.972			
7	----------							
	ACTING P-DELTA AXIAL FORCE:				-781.408			
	1	.000			-755.678			
		.000	-.589	209.783				
		439.200	-.589	-63.087				
		439.200			-824.632			
	2	.000			-42.226			
		.000	-.514	206.512				
		439.200	-.514	-18.648				
		439.200			-42.226			
	3	.000			50.972			
		.000	21.975	-5084.972		9.168	4946.011	
		439.200	21.975	6599.332		9.168	13683.097	
		439.200			50.972			
8	----------							
	ACTING P-DELTA AXIAL FORCE:				-817.770			
	1	.000			-824.632			

CAMELBACK RD BRIDGE AT AGRA FRIA RIVER, TRANSVERSE FRAME, Q500 FLOW

F R A M E E L E M E N T F O R C E S

ELT ID	LOAD COND	DIST ENDI	1-2 PLANE SHEAR	1-2 PLANE MOMENT	AXIAL FORCE	1-3 PLANE SHEAR	1-3 PLANE MOMENT	AXIAL TORQ
		.000	-.589	-63.087				
		24.000	-.589	-78.337				
		24.000			-828.400			
	2	.000			-42.226			
		.000	-.514	-18.648				
		24.000	-.514	-31.617				
		24.000			-42.226			
	3	.000			50.972			
		.000	21.975	6599.332		9.168	13683.097	
		24.000	21.975	7207.252		9.168	14036.509	
		24.000			50.972			
9	----------							
	ACTING P-DELTA AXIAL FORCE:				-821.538			
	1	.000			-828.400			
		.000	-.447	-78.337				
		24.000	-.447	-90.103				
		24.000			-832.168			
	2	.000			-42.226			
		.000	-.422	-31.617				
		24.000	-.422	-42.356				
		24.000			-42.226			
	3	.000			50.972			
		.000	12.992	7207.252		-4.133	14036.509	
		24.000	12.992	7590.921		-4.133	14053.698	
		24.000			50.972			
10	----------							
	ACTING P-DELTA AXIAL FORCE:				-825.306			
	1	.000			-832.168			
		.000	-.225	-90.103				
		24.000	-.225	-96.432				
		24.000			-835.936			
	2	.000			-42.226			
		.000	-.275	-42.356				
		24.000	-.275	-49.516				
		24.000			-42.226			
	3	.000			50.972			
		.000	-.740	7590.921		-23.879	14053.698	
		24.000	-.740	7635.822		-23.879	13579.852	
		24.000			50.972			

CAMELBACK RD BRIDGE AT AGRA FRIA RIVER, TRANSVERSE FRAME, Q500 FLOW

F R A M E E L E M E N T F O R C E S

ELT ID	LOAD COND	DIST ENDI	1-2 PLANE SHEAR	1-2 PLANE MOMENT	AXIAL FORCE	1-3 PLANE SHEAR	1-3 PLANE MOMENT	AXIAL TORQ
11	----------							
	ACTING P-DELTA AXIAL FORCE:				-829.074			
	1	.000			-835.936			
		.000	.027	-96.432				
		24.000	.027	-96.596				
		24.000			-839.704			
	2	.000			-42.226			
		.000	-.104	-49.516				
		24.000	-.104	-52.506				
		24.000			-42.226			
	3	.000			50.972			
		.000	-15.805	7635.822		-44.738	13579.852	
		24.000	-15.805	7309.831		-44.738	12588.684	
		24.000			50.972			
12	----------							
	ACTING P-DELTA AXIAL FORCE:				-832.842			
	1	.000			-839.704			
		.000	.269	-96.596				
		24.000	.269	-90.812				
		24.000			-843.472			
	2	.000			-42.226			
		.000	.067	-52.506				
		24.000	.067	-51.339				
		24.000			-42.226			
	3	.000			50.972			
		.000	-29.693	7309.831		-62.951	12588.684	
		24.000	-29.693	6641.511		-62.951	11144.802	
		24.000			50.972			
13	----------							
	ACTING P-DELTA AXIAL FORCE:				-836.610			
	1	.000			-843.472			
		.000	.474	-90.812				
		24.000	.474	-80.011				
		24.000			-847.240			
	2	.000			-42.226			
		.000	.217	-51.339				
		24.000	.217	-46.508				
		24.000			-42.226			
	3	.000			50.972			

CAMELBACK RD BRIDGE AT AGRA FRIA RIVER, TRANSVERSE FRAME, Q500 FLOW

F R A M E E L E M E N T F O R C E S

ELT ID	LOAD COND	DIST ENDI	1-2 PLANE SHEAR	1-2 PLANE MOMENT	AXIAL FORCE	1-3 PLANE SHEAR	1-3 PLANE MOMENT	AXIAL TORQ
		.000	-40.616	6641.511		-75.991	11144.802	
		24.000	-40.616	5702.777		-75.991	9374.028	
		24.000			50.972			
14	----------							
	ACTING P-DELTA AXIAL FORCE:				-840.378			
	1	.000			-847.240			
		.000	.597	-80.011				
		24.000	.597	-66.159				
		24.000			-851.008			
	2	.000			-42.226			
		.000	.314	-46.508				
		24.000	.314	-39.286				
		24.000			-42.226			
	3	.000			50.972			
		.000	-46.377	5702.777		-81.412	9374.028	
		24.000	-46.377	4618.609		-81.412	7461.350	
		24.000			50.972			
15	----------							
	ACTING P-DELTA AXIAL FORCE:				-844.146			
	1	.000			-851.008			
		.000	.652	-66.159				
		24.000	.652	-50.900				
		24.000			-854.776			
	2	.000			-42.226			
		.000	.366	-39.286				
		24.000	.366	-30.762				
		24.000			-42.226			
	3	.000			50.972			
		.000	-47.957	4618.609		-80.839	7461.350	
		24.000	-47.957	3490.697		-80.839	5552.949	
		24.000			50.972			
16	----------							
	ACTING P-DELTA AXIAL FORCE:				-847.914			
	1	.000			-854.776			
		.000	.650	-50.900				
		24.000	.650	-35.613				
		24.000			-858.544			
	2	.000			-42.226			
		.000	.381	-30.762				
		24.000	.381	-21.855				

CAMELBACK RD BRIDGE AT AGRA FRIA RIVER, TRANSVERSE FRAME, Q500 FLOW

F R A M E E L E M E N T F O R C E S

```
  ELT LOAD    DIST          1-2 PLANE       AXIAL       1-3 PLANE       AXIAL
   ID COND    ENDI       SHEAR      MOMENT   FORCE   SHEAR      MOMENT    TORQ
            24.000                           -42.226

        3    .000                             50.972
             .000     -46.070    3490.697          -75.343    5552.949
           24.000     -46.070    2403.615          -75.343    3769.357
           24.000                             50.972
   17 ----------------------------------------
      ACTING P-DELTA AXIAL FORCE:            -851.682

        1    .000                            -858.544
             .000        .596     -35.613
           24.000        .596     -21.595
           24.000                            -862.312

        2    .000                             -42.226
             .000        .359     -21.855
           24.000        .359     -13.443
           24.000                             -42.226

        3    .000                             50.972
             .000     -40.990    2403.615          -65.403    3769.357
           24.000     -40.990    1435.389          -65.403    2219.456
           24.000                             50.972
   18 ----------------------------------------
      ACTING P-DELTA AXIAL FORCE:            -855.450

        1    .000                            -862.312
             .000        .489     -21.595
           24.000        .489     -10.114
           24.000                            -866.080

        2    .000                             -42.226
             .000        .301     -13.443
           24.000        .301      -6.398
           24.000                             -42.226

        3    .000                             50.972
             .000     -32.864    1435.389          -51.357    2219.456
           24.000     -32.864     660.314          -51.357    1003.761
           24.000                             50.972
   19 ----------------------------------------
      ACTING P-DELTA AXIAL FORCE:            -860.536

        1    .000                            -866.080
             .000        .258     -10.114
           40.800        .258        .000
           40.800                            -872.486
```

CAMELBACK RD BRIDGE AT AGRA FRIA RIVER, TRANSVERSE FRAME, Q500 FLOW

F R A M E E L E M E N T F O R C E S

ELT ID	LOAD COND	DIST ENDI	1-2 PLANE SHEAR	1-2 PLANE MOMENT	AXIAL FORCE	1-3 PLANE SHEAR	1-3 PLANE MOMENT	AXIAL TORQ
	2	.000			-42.226			
		.000	.164	-6.398				
		40.800	.164	.000				
		40.800			-42.226			
	3	.000			50.972			
		.000	-16.711	660.314		-25.239	1003.761	
		40.800	-16.711	.000		-25.239	.000	
		40.800			50.972			
20	----------							
	ACTING P-DELTA AXIAL FORCE:				-1051.693			
	1	.000			-835.487			
		.000	.001	-.582				
		108.000	.001	-.446				
		108.000			-852.443			
	2	.000			-207.377			
		.000	.119	-61.320				
		108.000	.119	-45.190				
		108.000			-207.377			
	3	.000			-.351			
		.000	-.085	-9674.766		-2.831	.000	
		19.500	2.115	-9670.355		-2.031	527.710	
		36.000	7.125	-9622.256		-.211	987.018	
		60.000	11.385	-9419.113		1.339	1697.301	
		84.000	14.895	-9098.714		2.619	2441.998	
		108.000	14.895	-8679.429		2.619	3213.462	
		108.000			-.351			
21	----------							
	ACTING P-DELTA AXIAL FORCE:				-1070.250			
	1	.000			-852.443			
		.000	.001	-.446				
		128.400	.001	-.266				
		128.400			-872.602			
	2	.000			-207.377			
		.000	.119	-45.190				
		128.400	.119	-24.043				
		128.400			-207.377			
	3	.000			-.351			
		.000	17.645	-8679.429		3.619	3213.462	
		24.000	19.645	-8178.674		4.349	4016.202	
		43.500	20.825	-7722.900		4.769	4677.855	
		63.240	21.265	-7229.745		4.929	5350.776	

CAMELBACK RD BRIDGE AT AGRA FRIA RIVER, TRANSVERSE FRAME, Q500 FLOW

F R A M E E L E M E N T F O R C E S

ELT ID	LOAD COND	DIST ENDI	1-2 PLANE SHEAR	1-2 PLANE MOMENT	AXIAL FORCE	1-3 PLANE SHEAR	1-3 PLANE MOMENT	AXIAL TORQ
		128.400	21.265	-5519.513		4.929	7536.277	
		128.400			-.351			
22	----------							
	ACTING P-DELTA AXIAL FORCE:				-1114.807			
	1	.000			-872.602			
		.000	.001	-.266				
		439.200	.001	.397				
		439.200			-941.556			
	2	.000			-207.377			
		.000	.119	-24.043				
		439.200	.119	51.278				
		439.200			-207.377			
	3	.000			-.351			
		.000	21.265	-5519.513		4.929	7536.277	
		439.200	21.265	6763.265		4.929	19060.182	
		439.200			-.351			
23	----------							
	ACTING P-DELTA AXIAL FORCE:				-1151.168			
	1	.000			-941.556			
		.000	.001	.397				
		24.000	.001	.430				
		24.000			-945.324			
	2	.000			-207.377			
		.000	.119	51.278				
		24.000	.119	54.953				
		24.000			-207.377			
	3	.000			-.351			
		.000	21.265	6763.265		4.929	19060.182	
		24.000	21.265	7389.632		4.929	19432.868	
		24.000			-.351			
24	----------							
	ACTING P-DELTA AXIAL FORCE:				-1154.936			
	1	.000			-945.324			
		.000	.001	.430				
		24.000	.001	.450				
		24.000			-949.092			
	2	.000			-207.377			
		.000	.056	54.953				
		24.000	.056	57.019				
		24.000			-207.377			

F R A M E E L E M E N T F O R C E S

ELT ID	LOAD COND	DIST ENDI	1-2 PLANE SHEAR	1-2 PLANE MOMENT	AXIAL FORCE	1-3 PLANE SHEAR	1-3 PLANE MOMENT	AXIAL TORQ
	3	.000			-.351			
		.000	12.106	7389.632		-12.729	19432.868	
		24.000	12.106	7783.550		-12.729	19348.315	
		24.000			-.351			
25	----------							
	ACTING P-DELTA AXIAL FORCE:				-1158.704			
	1	.000			-949.092			
		.000	-.000	.450				
		24.000	-.000	.450				
		24.000			-952.860			
	2	.000			-207.377			
		.000	-.040	57.019				
		24.000	-.040	56.688				
		24.000			-207.377			
	3	.000			-.351			
		.000	-1.880	7783.550		-38.786	19348.315	
		24.000	-1.880	7828.419		-38.786	18604.933	
		24.000			-.351			
26	----------							
	ACTING P-DELTA AXIAL FORCE:				-1162.472			
	1	.000			-952.860			
		.000	-.001	.450				
		24.000	-.001	.430				
		24.000			-956.628			
	2	.000			-207.377			
		.000	-.144	56.688				
		24.000	-.144	53.766				
		24.000			-207.377			
	3	.000			-.351			
		.000	-17.200	7828.419		-66.087	18604.933	
		24.000	-17.200	7492.060		-66.087	17173.991	
		24.000			-.351			
27	----------							
	ACTING P-DELTA AXIAL FORCE:				-1166.240			
	1	.000			-956.628			
		.000	-.002	.430				
		24.000	-.002	.389				
		24.000			-960.396			
	2	.000			-207.377			

CAMELBACK RD BRIDGE AT AGRA FRIA RIVER, TRANSVERSE FRAME, Q500 FLOW

F R A M E E L E M E N T F O R C E S

```
  ELT LOAD    DIST          1-2 PLANE       AXIAL       1-3 PLANE       AXIAL
   ID COND    ENDI       SHEAR      MOMENT   FORCE   SHEAR      MOMENT    TORQ
              .000       -.238      53.766
            24.000       -.238      48.485
            24.000                        -207.377

        3    .000                           -.351
              .000     -31.290    7492.060         -89.619   17173.991
            24.000     -31.290    6804.484         -89.619   15148.254
            24.000                           -.351
   28 ------------------------------------------
      ACTING P-DELTA AXIAL FORCE:        -1170.008

        1    .000                        -960.396
              .000       -.002        .389
            24.000       -.002        .333
            24.000                        -964.164

        2    .000                        -207.377
              .000       -.311      48.485
            24.000       -.311      41.382
            24.000                        -207.377

        3    .000                           -.351
              .000     -42.327    6804.484        -106.053   15148.254
            24.000     -42.327    5840.113        -106.053   12701.464
            24.000                           -.351
   29 ------------------------------------------
      ACTING P-DELTA AXIAL FORCE:        -1173.776

        1    .000                        -964.164
              .000       -.003        .333
            24.000       -.003        .269
            24.000                        -967.932

        2    .000                        -207.377
              .000       -.347      41.382
            24.000       -.347      33.341
            24.000                        -207.377

        3    .000                           -.351
              .000     -48.092    5840.113        -112.359   12701.464
            24.000     -48.092    4727.065        -112.359   10080.831
            24.000                           -.351
   30 ------------------------------------------
      ACTING P-DELTA AXIAL FORCE:        -1177.544

        1    .000                        -967.932
              .000       -.003        .269
            24.000       -.003        .203
```

CAMELBACK RD BRIDGE AT AGRA FRIA RIVER, TRANSVERSE FRAME, Q500 FLOW

F R A M E E L E M E N T F O R C E S

ELT ID	LOAD COND	DIST ENDI	1-2 PLANE SHEAR	1-2 PLANE MOMENT	AXIAL FORCE	1-3 PLANE SHEAR	1-3 PLANE MOMENT	AXIAL TORQ
		24.000			-971.700			
	2	.000			-207.377			
		.000	-.354	33.341				
		24.000	-.354	25.076				
		24.000			-207.377			
	3	.000			-.351			
		.000	-49.590	4727.065		-110.745	10080.831	
		24.000	-49.590	3569.685		-110.745	7480.964	
		24.000			-.351			
31	----------							
	ACTING P-DELTA AXIAL FORCE:				-1181.312			
	1	.000			-971.700			
		.000	-.003	.203				
		24.000	-.003	.139				
		24.000			-975.468			
	2	.000			-207.377			
		.000	-.336	25.076				
		24.000	-.336	17.182				
		24.000			-207.377			
	3	.000			-.351			
		.000	-47.549	3569.685		-102.632	7480.964	
		24.000	-47.549	2454.926		-102.632	5062.402	
		24.000			-.351			
32	----------							
	ACTING P-DELTA AXIAL FORCE:				-1185.080			
	1	.000			-975.468			
		.000	-.002	.139				
		24.000	-.002	.083				
		24.000			-979.236			
	2	.000			-207.377			
		.000	-.297	17.182				
		24.000	-.297	10.203				
		24.000			-207.377			
	3	.000			-.351			
		.000	-42.245	2454.926		-88.675	5062.402	
		24.000	-42.245	1463.041		-88.675	2969.659	
		24.000			-.351			

CAMELBACK RD BRIDGE AT AGRA FRIA RIVER, TRANSVERSE FRAME, Q500 FLOW

F R A M E E L E M E N T F O R C E S

ELT ID	LOAD COND	DIST ENDI	1-2 PLANE SHEAR	1-2 PLANE MOMENT	AXIAL FORCE	1-3 PLANE SHEAR	1-3 PLANE MOMENT	AXIAL TORQ
33	ACTING P-DELTA AXIAL FORCE:				-1188.848			
	1	.000			-979.236			
		.000	-.002	.083				
		24.000	-.002	.038				
		24.000			-983.004			
	2	.000			-207.377			
		.000	-.236	10.203				
		24.000	-.236	4.655				
		24.000			-207.377			
	3	.000			-.351			
		.000	-33.833	1463.041		-69.351	2969.659	
		24.000	-33.833	670.375		-69.351	1335.247	
		24.000			-.351			
34	ACTING P-DELTA AXIAL FORCE:				-1193.935			
	1	.000			-983.004			
		.000	-.001	.038				
		40.800	-.001	.000				
		40.800			-989.410			
	2	.000			-207.377			
		.000	-.119	4.655				
		40.800	-.119	.000				
		40.800			-207.377			
	3	.000			-.351			
		.000	-17.175	670.375		-33.853	1335.247	
		40.800	-17.175	.000		-33.853	.000	
		40.800			-.351			
35	ACTING P-DELTA AXIAL FORCE:				-943.269			
	1	.000			-718.552			
		.000	.588	-326.615				
		108.000	.588	-279.076				
		108.000			-735.508			
	2	.000			-165.617			
		.000	.395	-212.171				
		108.000	.395	-173.954				
		108.000			-165.617			
	3	.000			-50.621			

CAMELBACK RD BRIDGE AT AGRA FRIA RIVER, TRANSVERSE FRAME, Q500 FLOW

F R A M E E L E M E N T F O R C E S

ELT ID	LOAD COND	DIST ENDI	1-2 PLANE SHEAR	1-2 PLANE MOMENT	AXIAL FORCE	1-3 PLANE SHEAR	1-3 PLANE MOMENT	AXIAL TORQ
		.000	-.540	-9146.707		1.423	.000	
		19.500	1.660	-9145.574		2.223	698.197	
		36.000	6.670	-9101.472		4.043	1301.682	
		60.000	10.930	-8906.110		5.593	2221.420	
		84.000	14.440	-8595.779		6.873	3175.101	
		108.000	14.440	-8188.799		6.873	4154.894	
		108.000			-50.621			
36	----------							
	ACTING P-DELTA AXIAL FORCE:				-961.826			
	1	.000			-735.508			
		.000	.588	-279.076				
		128.400	.588	-212.245				
		128.400			-755.667			
	2	.000			-165.617			
		.000	.395	-173.954				
		128.400	.395	-121.983				
		128.400			-165.617			
	3	.000			-50.621			
		.000	17.190	-8188.799		7.873	4154.894	
		24.000	19.190	-7702.435		8.603	5168.637	
		43.500	20.370	-7259.876		9.023	6000.976	
		63.240	20.810	-6781.416		9.183	6845.896	
		128.400	20.810	-5128.204		9.183	9592.317	
		128.400			-50.621			
37	----------							
	ACTING P-DELTA AXIAL FORCE:				-1006.383			
	1	.000			-755.667			
		.000	.588	-212.245				
		439.200	.588	64.703				
		439.200			-824.621			
	2	.000			-165.617			
		.000	.395	-121.983				
		439.200	.395	80.905				
		439.200			-165.617			
	3	.000			-50.621			
		.000	20.810	-5128.204		9.183	9592.317	
		439.200	20.810	6633.913		9.183	24488.960	
		439.200			-50.621			
38	----------							
	ACTING P-DELTA AXIAL FORCE:				-1042.744			
	1	.000			-824.621			

CAMELBACK RD BRIDGE AT AGRA FRIA RIVER, TRANSVERSE FRAME, Q500 FLOW

F R A M E E L E M E N T F O R C E S

ELT ID	LOAD COND	DIST ENDI	1-2 PLANE SHEAR	1-2 PLANE MOMENT	AXIAL FORCE	1-3 PLANE SHEAR	1-3 PLANE MOMENT	AXIAL TORQ
		.000	.588	64.703				
		24.000	.588	80.264				
		24.000			-828.389			
	2	.000			-165.617			
		.000	.395	80.905				
		24.000	.395	91.798				
		24.000			-165.617			
	3	.000			-50.621			
		.000	20.810	6633.913		9.183	24488.960	
		24.000	20.810	7235.938		9.183	25007.643	
		24.000			-50.621			
39	ACTING P-DELTA AXIAL FORCE:				-1046.512			
	1	.000			-828.389			
		.000	.444	80.264				
		24.000	.444	92.250				
		24.000			-832.157			
	2	.000			-165.617			
		.000	.265	91.798				
		24.000	.265	99.435				
		24.000			-165.617			
	3	.000			-50.621			
		.000	11.878	7235.938		-13.808	25007.643	
		24.000	11.878	7612.404		-13.808	24935.646	
		24.000			-50.621			
40	ACTING P-DELTA AXIAL FORCE:				-1050.280			
	1	.000			-832.157			
		.000	.218	92.250				
		24.000	.218	98.668				
		24.000			-835.925			
	2	.000			-165.617			
		.000	.065	99.435				
		24.000	.065	102.109				
		24.000			-165.617			
	3	.000			-50.621			
		.000	-1.760	7612.404		-47.794	24935.646	
		24.000	-1.760	7649.725		-47.794	24009.006	
		24.000			-50.621			

F R A M E E L E M E N T F O R C E S

```
 ELT LOAD    DIST          1-2 PLANE       AXIAL       1-3 PLANE       AXIAL
  ID COND    ENDI       SHEAR      MOMENT   FORCE   SHEAR      MOMENT    TORQ
  41 ----------------------------------------
     ACTING P-DELTA AXIAL FORCE:        -1054.048

       1    .000                        -835.925
            .000       -.039      98.668
          24.000       -.039      98.782
          24.000                        -839.693

       2    .000                        -165.617
            .000       -.158     102.109
          24.000       -.158      99.278
          24.000                        -165.617

       3    .000                         -50.621
            .000     -16.696    7649.725        -83.487   24009.006
          24.000     -16.696    7316.602        -83.487   22187.962
          24.000                         -50.621
  42 ----------------------------------------
     ACTING P-DELTA AXIAL FORCE:        -1057.816

       1    .000                        -839.693
            .000       -.285      98.782
          24.000       -.285      92.821
          24.000                        -843.461

       2    .000                        -165.617
            .000       -.367      99.278
          24.000       -.367      91.280
          24.000                        -165.617

       3    .000                         -50.621
            .000     -30.431    7316.602        -114.370   22187.962
          24.000     -30.431    6642.306        -114.370   19590.605
          24.000                         -50.621
  43 ----------------------------------------
     ACTING P-DELTA AXIAL FORCE:        -1061.584

       1    .000                        -843.461
            .000       -.492      92.821
          24.000       -.492      81.741
          24.000                        -847.229

       2    .000                        -165.617
            .000       -.536      91.280
          24.000       -.536      79.090
          24.000                        -165.617

       3    .000                         -50.621
```

CAMELBACK RD BRIDGE AT AGRA FRIA RIVER, TRANSVERSE FRAME, Q500 FLOW

F R A M E E L E M E N T F O R C E S

ELT ID	LOAD COND	DIST ENDI	1-2 PLANE SHEAR	1-2 PLANE MOMENT	AXIAL FORCE	1-3 PLANE SHEAR	1-3 PLANE MOMENT	AXIAL TORQ
		.000	-41.188	6642.306		-136.099	19590.605	
		24.000	-41.188	5699.312		-136.099	16440.546	
		24.000			-50.621			
44	----------							
	ACTING P-DELTA AXIAL FORCE:				-1065.352			
	1	.000			-847.229			
		.000	-.617	81.741				
		24.000	-.617	67.551				
		24.000			-850.997			
	2	.000			-165.617			
		.000	-.629	79.090				
		24.000	-.629	64.519				
		24.000			-165.617			
	3	.000			-50.621			
		.000	-46.807	5699.312		-144.647	16440.546	
		24.000	-46.807	4612.355		-144.647	13058.955	
		24.000			-50.621			
45	----------							
	ACTING P-DELTA AXIAL FORCE:				-1069.120			
	1	.000			-850.997			
		.000	-.672	67.551				
		24.000	-.672	51.933				
		24.000			-854.765			
	2	.000			-165.617			
		.000	-.662	64.519				
		24.000	-.662	49.059				
		24.000			-165.617			
	3	.000			-50.621			
		.000	-48.267	4612.355		-142.870	13058.955	
		24.000	-48.267	3482.935		-142.870	9698.918	
		24.000			-50.621			
46	----------							
	ACTING P-DELTA AXIAL FORCE:				-1072.888			
	1	.000			-854.765			
		.000	-.669	51.933				
		24.000	-.669	36.299				
		24.000			-858.533			
	2	.000			-165.617			
		.000	-.644	49.059				
		24.000	-.644	33.955				

CAMELBACK RD BRIDGE AT AGRA FRIA RIVER, TRANSVERSE FRAME, Q500 FLOW

F R A M E E L E M E N T F O R C E S

```
  ELT LOAD    DIST          1-2 PLANE       AXIAL       1-3 PLANE       AXIAL
   ID COND    ENDI       SHEAR      MOMENT   FORCE   SHEAR      MOMENT    TORQ
            24.000                          -165.617

        3    .000                           -50.621
             .000     -46.280    3482.935        -132.617    9698.918
           24.000     -46.280    2395.572        -132.617    6569.173
           24.000                           -50.621
   47 ----------------------------------------
      ACTING P-DELTA AXIAL FORCE:        -1076.656

        1    .000                           -858.533
             .000       -.612      36.299
           24.000       -.612      21.975
           24.000                           -862.301

        2    .000                           -165.617
             .000       -.579      33.955
           24.000       -.579      20.366
           24.000                           -165.617

        3    .000                           -50.621
             .000     -41.116    2395.572        -114.736    6569.173
           24.000     -41.116    1428.229        -114.736    3857.803
           24.000                           -50.621
   48 ----------------------------------------
      ACTING P-DELTA AXIAL FORCE:        -1080.424

        1    .000                           -862.301
             .000       -.502      21.975
           24.000       -.502      10.260
           24.000                           -866.069

        2    .000                           -165.617
             .000       -.468      20.366
           24.000       -.468       9.407
           24.000                           -165.617

        3    .000                           -50.621
             .000     -32.928    1428.229         -89.837    3857.803
           24.000     -32.928     655.059         -89.837    1737.614
           24.000                           -50.621
   49 ----------------------------------------
      ACTING P-DELTA AXIAL FORCE:        -1085.511

        1    .000                           -866.069
             .000       -.264      10.260
           40.800       -.264        .000
           40.800                           -872.475
```

PROGRAM:SAP90/FILE:CAMEL4-T.F3F
VERSE FRAME, Q500 FLOW

AXIAL FORCE	1-3 PLANE SHEAR	MOMENT	AXIAL TORQ
5.617			
5.617			
0.621			
	-43.938	1737.614	
	-43.938	.000	
0.621			

CAMELBACK RD BRIDGE AT AGRA FRIA RIVER, TRANSVERSE FRAME, Q500 FLOW

F R A M E E L E M E N T F O R C E S

ELT ID	LOAD COND	DIST ENDI	1-2 PLANE SHEAR	1-2 PLANE MOMENT	AXIAL FORCE	1-3 PLANE SHEAR	1-3 PLANE MOMENT	AXIAL TORQ
1	----------							
	ACTING P-DELTA AXIAL FORCE:				.000			
	1	.000			.000			
		.000	.000	.000				
		41.000	-272.733	-179.109				
		101.000	-285.513	-16926.407				
		101.000			.000			
	2	.000			.000			
		101.000			.000			
	3	.000			.000			
		.000	.000	.000		.000	.000	
		101.000	.000	.000		.000	.000	
		101.000			.000			
2	----------							
	ACTING P-DELTA AXIAL FORCE:				-.520			
	1	.000			-.590			
		.000	433.058	-17257.996				
		36.001	161.390	-1805.784				
		132.001	-123.058	12705.950				
		228.001	-407.506	-89.328				
		276.000	-417.730	-19894.640				
		276.000			-.590			
	2	.000			.000			
		276.000			.000			
	3	.000			.111			
		.000	-49.192	8880.848		-.549	.000	
		276.000	-49.192	-4696.185		-.549	-151.936	
		276.000			.111			
3	----------							
	ACTING P-DELTA AXIAL FORCE:				-.249			
	1	.000			-.590			
		.000	417.735	-19894.395				
		48.001	143.510	-88.389				
		144.001	-140.938	12706.896				
		240.001	-425.386	-1804.830				
		276.000	-433.053	-17256.375				
		276.000			-.590			
	2	.000			.000			
		276.000			.000			

CAMELBACK RD BRIDGE AT AGRA FRIA RIVER, TRANSVERSE FRAME, Q500 FLOW

F R A M E E L E M E N T F O R C E S

ELT ID	LOAD COND	DIST ENDI	1-2 PLANE SHEAR	1-2 PLANE MOMENT	AXIAL FORCE	1-3 PLANE SHEAR	1-3 PLANE MOMENT	AXIAL TORQ
	3	.000			.380			
		.000	-49.044	4685.546		.551	-151.936	
		276.000	-49.044	-8850.674		.551	.000	
		276.000			.380			
4	----------							
	ACTING P-DELTA AXIAL FORCE:				.000			
	1	.000			.000			
		.000	285.513	-16926.407				
		60.000	8.733	-179.024				
		101.000	.000	.000				
		101.000			.000			
	2	.000			.000			
		101.000			.000			
	3	.000			.000			
		.000	.000	.000		.000	.000	
		101.000	.000	.000		.000	.000	
		101.000			.000			
5	----------							
	ACTING P-DELTA AXIAL FORCE:				-677.869			
	1	.000			-718.571			
		.000	-.590	331.589				
		108.000	-.590	279.240				
		108.000			-735.527			
	2	.000			.000			
		108.000			.000			
	3	.000			49.192			
		.000	.111	-8880.848		.549	.000	
		19.500	2.311	-8870.549		1.349	228.349	
		36.000	7.321	-8820.764		3.169	434.653	
		60.000	11.581	-8620.469		4.719	777.975	
		84.000	15.091	-8309.080		5.999	1157.654	
		108.000	15.091	-7904.833		5.999	1566.841	
		108.000			49.192			
6	----------							
	ACTING P-DELTA AXIAL FORCE:				-696.426			
	1	.000			-735.527			
		.000	-.590	279.240				
		128.400	-.590	209.633				
		128.400			-755.686			

CAMELBACK RD BRIDGE AT AGRA FRIA RIVER, TRANSVERSE FRAME, Q500 FLOW

F R A M E E L E M E N T F O R C E S

ELT ID	LOAD COND	DIST ENDI	1-2 PLANE SHEAR	1-2 PLANE MOMENT	AXIAL FORCE	1-3 PLANE SHEAR	1-3 PLANE MOMENT	AXIAL TORQ
	2	.000			.000			
		128.400			.000			
	3	.000			49.192			
		.000	17.841	-7904.833		6.999	1566.841	
		24.000	19.841	-7424.907		7.729	2005.648	
		43.500	21.021	-6990.115		8.149	2374.851	
		63.240	21.461	-6521.686		8.309	2755.178	
		128.400	21.461	-4915.324		8.309	4005.393	
		128.400			49.192			
7	ACTING P-DELTA AXIAL FORCE:				-740.983			
	1	.000			-755.686			
		.000	-.590	209.633				
		439.200	-.590	-63.181				
		439.200			-824.641			
	2	.000			.000			
		439.200			.000			
	3	.000			49.192			
		.000	21.461	-4915.324		8.309	4005.393	
		439.200	21.461	6373.102		8.309	11362.133	
		439.200			49.192			
8	ACTING P-DELTA AXIAL FORCE:				-777.344			
	1	.000			-824.641			
		.000	-.590	-63.181				
		24.000	-.590	-78.410				
		24.000			-828.409			
	2	.000			.000			
		24.000			.000			
	3	.000			49.192			
		.000	21.461	6373.102		8.309	11362.133	
		24.000	21.461	6962.184		8.309	11667.277	
		24.000			49.192			
9	ACTING P-DELTA AXIAL FORCE:				-781.112			
	1	.000			-828.409			
		.000	-.449	-78.410				
		24.000	-.449	-90.160				
		24.000			-832.177			

F R A M E E L E M E N T F O R C E S

ELT ID	LOAD COND	DIST ENDI	1-2 PLANE SHEAR	1-2 PLANE MOMENT	AXIAL FORCE	1-3 PLANE SHEAR	1-3 PLANE MOMENT	AXIAL TORQ
	2	.000			.000			
		24.000			.000			
	3	.000			49.192			
		.000	12.767	6962.184		-2.817	11667.277	
		24.000	12.767	7334.666		-2.817	11691.997	
		24.000			49.192			
10	----------							
	ACTING P-DELTA AXIAL FORCE:				-784.880			
	1	.000			-832.177			
		.000	-.227	-90.160				
		24.000	-.227	-96.475				
		24.000			-835.945			
	2	.000			.000			
		24.000			.000			
	3	.000			49.192			
		.000	-.527	7334.666		-19.348	11691.997	
		24.000	-.527	7379.650		-19.348	11306.449	
		24.000			49.192			
11	----------							
	ACTING P-DELTA AXIAL FORCE:				-788.648			
	1	.000			-835.945			
		.000	.025	-96.475				
		24.000	.025	-96.629				
		24.000			-839.713			
	2	.000			.000			
		24.000			.000			
	3	.000			49.192			
		.000	-15.117	7379.650		-36.831	11306.449	
		24.000	-15.117	7065.923		-36.831	10488.102	
		24.000			49.192			
12	----------							
	ACTING P-DELTA AXIAL FORCE:				-792.416			
	1	.000			-839.713			
		.000	.268	-96.629				
		24.000	.268	-90.838				
		24.000			-843.481			
	2	.000			.000			
		24.000			.000			

CAMELBACK RD BRIDGE AT AGRA FRIA RIVER, TRANSVERSE FRAME, Q500 FLOW

F R A M E E L E M E N T F O R C E S

ELT ID	LOAD COND	DIST ENDI	1-2 PLANE SHEAR	1-2 PLANE MOMENT	AXIAL FORCE	1-3 PLANE SHEAR	1-3 PLANE MOMENT	AXIAL TORQ
	3	.000			49.192			
		.000	-28.572	7065.923		-52.123	10488.102	
		24.000	-28.572	6420.970		-52.123	9290.385	
		24.000			49.192			
13	----------							
	ACTING P-DELTA AXIAL FORCE:				-796.184			
	1	.000			-843.481			
		.000	.473	-90.838				
		24.000	.473	-80.032				
		24.000			-847.248			
	2	.000			.000			
		24.000			.000			
	3	.000			49.192			
		.000	-39.164	6420.970		-63.109	9290.385	
		24.000	-39.164	5514.221		-63.109	7817.965	
		24.000			49.192			
14	----------							
	ACTING P-DELTA AXIAL FORCE:				-799.952			
	1	.000			-847.248			
		.000	.596	-80.032				
		24.000	.596	-66.177				
		24.000			-851.016			
	2	.000			.000			
		24.000			.000			
	3	.000			49.192			
		.000	-44.762	5514.221		-67.723	7817.965	
		24.000	-44.762	4466.561		-67.723	6225.455	
		24.000			49.192			
15	----------							
	ACTING P-DELTA AXIAL FORCE:				-803.720			
	1	.000			-851.016			
		.000	.651	-66.177				
		24.000	.651	-50.917				
		24.000			-854.784			
	2	.000			.000			
		24.000			.000			
	3	.000			49.192			
		.000	-46.311	4466.561		-67.320	6225.455	

CAMELBACK RD BRIDGE AT AGRA FRIA RIVER, TRANSVERSE FRAME, Q500 FLOW

F R A M E E L E M E N T F O R C E S

ELT ID	LOAD COND	DIST ENDI	1-2 PLANE SHEAR	1-2 PLANE MOMENT	AXIAL FORCE	1-3 PLANE SHEAR	1-3 PLANE MOMENT	AXIAL TORQ
		24.000	-46.311	3376.350		-67.320	4635.108	
		24.000			49.192			
16	----------							
	ACTING P-DELTA AXIAL FORCE:				-807.488			
	1	.000			-854.784			
		.000	.650	-50.917				
		24.000	.650	-35.630				
		24.000			-858.552			
	2	.000			.000			
		24.000			.000			
	3	.000			49.192			
		.000	-44.506	3376.350		-62.795	4635.108	
		24.000	-44.506	2325.375		-62.795	3147.724	
		24.000			49.192			
17	----------							
	ACTING P-DELTA AXIAL FORCE:				-811.256			
	1	.000			-858.552			
		.000	.595	-35.630				
		24.000	.595	-21.611				
		24.000			-862.320			
	2	.000			.000			
		24.000			.000			
	3	.000			49.192			
		.000	-39.609	2325.375		-54.548	3147.724	
		24.000	-39.609	1389.093		-54.548	1854.406	
		24.000			49.192			
18	----------							
	ACTING P-DELTA AXIAL FORCE:				-815.024			
	1	.000			-862.320			
		.000	.488	-21.611				
		24.000	.488	-10.126				
		24.000			-866.089			
	2	.000			.000			
		24.000			.000			
	3	.000			49.192			
		.000	-31.764	1389.093		-42.858	1854.406	
		24.000	-31.764	639.368		-42.858	839.334	
		24.000			49.192			

CAMELBACK RD BRIDGE AT AGRA FRIA RIVER, TRANSVERSE FRAME, Q500 FLOW

F R A M E E L E M E N T F O R C E S

ELT ID	LOAD COND	DIST ENDI	1-2 PLANE SHEAR	1-2 PLANE MOMENT	AXIAL FORCE	1-3 PLANE SHEAR	1-3 PLANE MOMENT	AXIAL TORQ
19								
	ACTING P-DELTA AXIAL FORCE:				-820.111			
	1	.000			-866.089			
		.000	.258	-10.126				
		40.800	.258	.000				
		40.800			-872.494			
	2	.000			.000			
		40.800			.000			
	3	.000			49.192			
		.000	-16.158	639.368		-21.083	839.334	
		40.800	-16.158	.000		-21.083	.000	
		40.800			49.192			
20								
	ACTING P-DELTA AXIAL FORCE:				-844.066			
	1	.000			-835.464			
		.000	.000	-.245				
		108.000	.000	-.186				
		108.000			-852.420			
	2	.000			.000			
		108.000			.000			
	3	.000			-.148			
		.000	.269	-9381.730		-1.100	.000	
		19.500	2.469	-9371.747		-.300	281.584	
		36.000	7.479	-9320.726		1.520	532.872	
		60.000	11.739	-9116.214		3.070	941.403	
		84.000	15.249	-8797.799		4.350	1385.874	
		108.000	15.249	-8383.780		4.350	1859.260	
		108.000			-.148			
21								
	ACTING P-DELTA AXIAL FORCE:				-862.624			
	1	.000			-852.420			
		.000	.000	-.186				
		128.400	.000	-.110				
		128.400			-872.579			
	2	.000			.000			
		128.400			.000			
	3	.000			-.148			
		.000	17.999	-8383.780		5.350	1859.260	
		24.000	19.999	-7891.508		6.080	2362.338	

CAMELBACK RD BRIDGE AT AGRA FRIA RIVER, TRANSVERSE FRAME, Q500 FLOW

F R A M E E L E M E N T F O R C E S

```
  ELT LOAD    DIST          1-2 PLANE       AXIAL       1-3 PLANE       AXIAL
   ID COND    ENDI       SHEAR     MOMENT   FORCE   SHEAR     MOMENT    TORQ
            43.500      21.179  -7444.831           6.500    2783.044
            63.240      21.619  -6962.775           6.660    3214.738
           128.400      21.619  -5301.217           6.660    4627.623
           128.400                          -.148
    22 ----------------------------------------
       ACTING P-DELTA AXIAL FORCE:          -907.180

         1    .000                         -872.579
              .000        .000       -.110
           439.200        .000        .166
           439.200                         -941.534

         2    .000                            .000
           439.200                            .000

         3    .000                           -.148
              .000      21.619  -5301.217           6.660    4627.623
           439.200      21.619   6505.269           6.660   12575.227
           439.200                          -.148
    23 ----------------------------------------
       ACTING P-DELTA AXIAL FORCE:          -943.542

         1    .000                         -941.534
              .000        .000        .166
            24.000        .000        .180
            24.000                         -945.302

         2    .000                            .000
            24.000                            .000

         3    .000                           -.148
              .000      21.619   6505.269           6.660   12575.227
            24.000      21.619   7116.107           6.660   12875.256
            24.000                          -.148
    24 ----------------------------------------
       ACTING P-DELTA AXIAL FORCE:          -947.310

         1    .000                         -945.302
              .000        .000        .180
            24.000        .000        .188
            24.000                         -949.070

         2    .000                            .000
            24.000                            .000

         3    .000                           -.148
              .000      12.721   7116.107          -5.377   12875.256
            24.000      12.721   7503.466          -5.377   12868.338
```

CAMELBACK RD BRIDGE AT AGRA FRIA RIVER, TRANSVERSE FRAME, Q500 FLOW

F R A M E E L E M E N T F O R C E S

```
 ELT LOAD    DIST          1-2 PLANE       AXIAL       1-3 PLANE       AXIAL
  ID COND    ENDI       SHEAR     MOMENT   FORCE   SHEAR      MOMENT    TORQ
           24.000                          -.148
  25 ----------------------------------------
     ACTING P-DELTA AXIAL FORCE:          -951.078

       1    .000                         -949.070
            .000        .000        .188
          24.000        .000        .189
          24.000                        -952.838

       2    .000                            .000
          24.000                            .000

       3    .000                            -.148
            .000      -.884    7503.466        -23.211   12868.338
          24.000      -.884    7553.791        -23.211   12415.235
          24.000                            -.148
  26 ----------------------------------------
     ACTING P-DELTA AXIAL FORCE:          -954.846

       1    .000                         -952.838
            .000      -.000        .189
          24.000      -.000        .180
          24.000                        -956.606

       2    .000                            .000
          24.000                            .000

       3    .000                            -.148
            .000    -15.809    7553.791        -42.001   12415.235
          24.000    -15.809    7235.224        -42.001   11493.528
          24.000                            -.148
  27 ----------------------------------------
     ACTING P-DELTA AXIAL FORCE:          -958.614

       1    .000                         -956.606
            .000      -.001        .180
          24.000      -.001        .163
          24.000                        -960.374

       2    .000                            .000
          24.000                            .000

       3    .000                            -.148
            .000    -29.568    7235.224        -58.339   11493.528
          24.000    -29.568    6576.127        -58.339   10163.254
          24.000                            -.148
```

CAMELBACK RD BRIDGE AT AGRA FRIA RIVER, TRANSVERSE FRAME, Q500 FLOW

F R A M E E L E M E N T F O R C E S

ELT ID	LOAD COND	DIST ENDI	1-2 PLANE SHEAR	1-2 PLANE MOMENT	AXIAL FORCE	1-3 PLANE SHEAR	1-3 PLANE MOMENT	AXIAL TORQ
28	ACTING P-DELTA AXIAL FORCE:				-962.382			
	1	.000			-960.374			
		.000	-.001	.163				
		24.000	-.001	.140				
		24.000			-964.142			
	2	.000			.000			
		24.000			.000			
	3	.000			-.148			
		.000	-40.388	6576.127		-69.944	10163.254	
		24.000	-40.388	5647.920		-69.944	8539.801	
		24.000			-.148			
29	ACTING P-DELTA AXIAL FORCE:				-966.150			
	1	.000			-964.142			
		.000	-.001	.140				
		24.000	-.001	.113				
		24.000			-967.910			
	2	.000			.000			
		24.000			.000			
	3	.000			-.148			
		.000	-46.091	5647.920		-74.651	8539.801	
		24.000	-46.091	4574.661		-74.651	6790.982	
		24.000			-.148			
30	ACTING P-DELTA AXIAL FORCE:				-969.918			
	1	.000			-967.910			
		.000	-.001	.113				
		24.000	-.001	.085				
		24.000			-971.678			
	2	.000			.000			
		24.000			.000			
	3	.000			-.148			
		.000	-47.648	4574.661		-73.941	6790.982	
		24.000	-47.648	3457.375		-73.941	5049.256	
		24.000			-.148			

CAMELBACK RD BRIDGE AT AGRA FRIA RIVER, TRANSVERSE FRAME, Q500 FLOW

F R A M E E L E M E N T F O R C E S

ELT ID	LOAD COND	DIST ENDI	1-2 PLANE SHEAR	1-2 PLANE MOMENT	AXIAL FORCE	1-3 PLANE SHEAR	1-3 PLANE MOMENT	AXIAL TORQ
31	----------							
	ACTING P-DELTA AXIAL FORCE:				-973.686			
	1	.000			-971.678			
		.000	-.001	.085				
		24.000	-.001	.059				
		24.000			-975.446			
	2	.000			.000			
		24.000			.000			
	3	.000			-.148			
		.000	-45.767	3457.375		-68.784	5049.256	
		24.000	-45.767	2380.162		-68.784	3423.875	
		24.000			-.148			
32	----------							
	ACTING P-DELTA AXIAL FORCE:				-977.454			
	1	.000			-975.446			
		.000	-.001	.059				
		24.000	-.001	.035				
		24.000			-979.214			
	2	.000			.000			
		24.000			.000			
	3	.000			-.148			
		.000	-40.717	2380.162		-59.617	3423.875	
		24.000	-40.717	1420.647		-59.617	2013.422	
		24.000			-.148			
33	----------							
	ACTING P-DELTA AXIAL FORCE:				-981.222			
	1	.000			-979.214			
		.000	-.001	.035				
		24.000	-.001	.016				
		24.000			-982.982			
	2	.000			.000			
		24.000			.000			
	3	.000			-.148			
		.000	-32.644	1420.647		-46.751	2013.422	
		24.000	-32.644	652.752		-46.751	908.711	
		24.000			-.148			

CAMELBACK RD BRIDGE AT AGRA FRIA RIVER, TRANSVERSE FRAME, Q500 FLOW

F R A M E E L E M E N T F O R C E S

ELT ID	LOAD COND	DIST ENDI	1-2 PLANE SHEAR	1-2 PLANE MOMENT	AXIAL FORCE	1-3 PLANE SHEAR	1-3 PLANE MOMENT	AXIAL TORQ
34	----------							
	ACTING P-DELTA AXIAL FORCE:				-986.308			
	1	.000			-982.982			
		.000	-.000	.016				
		40.800	-.000	.000				
		40.800			-989.387			
	2	.000			.000			
		40.800			.000			
	3	.000			-.148			
		.000	-16.599	652.752		-22.925	908.711	
		40.800	-16.599	.000		-22.925	.000	
		40.800			-.148			
35	----------							
	ACTING P-DELTA AXIAL FORCE:				-776.101			
	1	.000			-718.566			
		.000	.590	-329.968				
		108.000	.590	-279.343				
		108.000			-735.522			
	2	.000			.000			
		108.000			.000			
	3	.000			-49.044			
		.000	-.380	-8850.674		.551	.000	
		19.500	1.820	-8848.805		1.351	316.316	
		36.000	6.830	-8805.476		3.171	596.986	
		60.000	11.090	-8613.478		4.721	1048.239	
		84.000	14.600	-8309.114		6.001	1535.406	
		108.000	14.600	-7910.641		6.001	2051.455	
		108.000			-49.044			
36	----------							
	ACTING P-DELTA AXIAL FORCE:				-794.658			
	1	.000			-735.522			
		.000	.590	-279.343				
		128.400	.590	-210.691				
		128.400			-755.681			
	2	.000			.000			
		128.400			.000			
	3	.000			-49.044			
		.000	17.350	-7910.641		7.001	2051.455	
		24.000	19.350	-7435.282		7.731	2597.937	

CAMELBACK RD BRIDGE AT AGRA FRIA RIVER, TRANSVERSE FRAME, Q500 FLOW

F R A M E E L E M E N T F O R C E S

ELT ID	LOAD COND	DIST ENDI	1-2 PLANE SHEAR	1-2 PLANE MOMENT	AXIAL FORCE	1-3 PLANE SHEAR	1-3 PLANE MOMENT	AXIAL TORQ
		43.500	20.530	-7003.365		8.151	3053.878	
		63.240	20.970	-6537.131		8.311	3521.214	
		128.400	20.970	-4933.488		8.311	5051.574	
		128.400			-49.044			
37	----------							
	ACTING P-DELTA AXIAL FORCE:				-839.215			
	1	.000			-755.681			
		.000	.590	-210.691				
		439.200	.590	63.869				
		439.200			-824.636			
	2	.000			.000			
		439.200			.000			
	3	.000			-49.044			
		.000	20.970	-4933.488		8.311	5051.574	
		439.200	20.970	6387.620		8.311	13805.189	
		439.200			-49.044			
38	----------							
	ACTING P-DELTA AXIAL FORCE:				-875.576			
	1	.000			-824.636			
		.000	.590	63.869				
		24.000	.590	79.232				
		24.000			-828.404			
	2	.000			.000			
		24.000			.000			
	3	.000			-49.044			
		.000	20.970	6387.620		8.311	13805.189	
		24.000	20.970	6974.238		8.311	14148.118	
		24.000			-49.044			
39	----------							
	ACTING P-DELTA AXIAL FORCE:				-879.344			
	1	.000			-828.404			
		.000	.447	79.232				
		24.000	.447	91.076				
		24.000			-832.172			
	2	.000			.000			
		24.000			.000			
	3	.000			-49.044			
		.000	12.297	6974.238		-5.007	14148.118	
		24.000	12.297	7343.703		-5.007	14153.022	

CAMELBACK RD BRIDGE AT AGRA FRIA RIVER, TRANSVERSE FRAME, Q500 FLOW

F R A M E E L E M E N T F O R C E S

```
  ELT LOAD    DIST          1-2 PLANE       AXIAL       1-3 PLANE       AXIAL
   ID COND    ENDI       SHEAR     MOMENT   FORCE   SHEAR      MOMENT    TORQ
            24.000                         -49.044
   40 ----------------------------------------
      ACTING P-DELTA AXIAL FORCE:          -883.112

         1    .000                         -832.172
              .000        .223     91.076
            24.000        .223     97.429
            24.000                         -835.940

         2    .000                            .000
            24.000                            .000

         3    .000                          -49.044
              .000       -.958   7343.703        -24.760   14153.022
            24.000       -.958   7385.508        -24.760   13665.343
            24.000                          -49.044
   41 ----------------------------------------
      ACTING P-DELTA AXIAL FORCE:          -886.880

         1    .000                         -835.940
              .000       -.030     97.429
            24.000       -.030     97.562
            24.000                         -839.708

         2    .000                            .000
            24.000                            .000

         3    .000                          -49.044
              .000     -15.493   7385.508        -45.600   13665.343
            24.000     -15.493   7068.788        -45.600   12659.490
            24.000                          -49.044
   42 ----------------------------------------
      ACTING P-DELTA AXIAL FORCE:          -890.648

         1    .000                         -839.708
              .000       -.275     97.562
            24.000       -.275     91.696
            24.000                         -843.476

         2    .000                            .000
            24.000                            .000

         3    .000                          -49.044
              .000     -28.885   7068.788        -63.760   12659.490
            24.000     -28.885   6421.323        -63.760   11200.985
            24.000                          -49.044
```

CAMELBACK RD BRIDGE AT AGRA FRIA RIVER, TRANSVERSE FRAME, Q500 FLOW

F R A M E E L E M E N T F O R C E S

ELT ID	LOAD COND	DIST ENDI	1-2 PLANE SHEAR	1-2 PLANE MOMENT	AXIAL FORCE	1-3 PLANE SHEAR	1-3 PLANE MOMENT	AXIAL TORQ
43								
	ACTING P-DELTA AXIAL FORCE:				-894.416			
	1	.000			-843.476			
		.000	-.481	91.696				
		24.000	-.481	80.771				
		24.000			-847.244			
	2	.000			.000			
		24.000			.000			
	3	.000			-49.044			
		.000	-39.407	6421.323		-76.714	11200.985	
		24.000	-39.407	5512.780		-76.714	9416.620	
		24.000			-49.044			
44								
	ACTING P-DELTA AXIAL FORCE:				-898.184			
	1	.000			-847.244			
		.000	-.604	80.771				
		24.000	-.604	66.772				
		24.000			-851.012			
	2	.000			.000			
		24.000			.000			
	3	.000			-49.044			
		.000	-44.944	5512.780		-82.036	9416.620	
		24.000	-44.944	4463.941		-82.036	7491.832	
		24.000			-49.044			
45								
	ACTING P-DELTA AXIAL FORCE:				-901.952			
	1	.000			-851.012			
		.000	-.660	66.772				
		24.000	-.660	51.358				
		24.000			-854.780			
	2	.000			.000			
		24.000			.000			
	3	.000			-49.044			
		.000	-46.443	4463.941		-81.360	7491.832	
		24.000	-46.443	3373.088		-81.360	5573.075	
		24.000			-49.044			

CAMELBACK RD BRIDGE AT AGRA FRIA RIVER, TRANSVERSE FRAME, Q500 FLOW

F R A M E E L E M E N T F O R C E S

ELT ID	LOAD COND	DIST ENDI	1-2 PLANE SHEAR	1-2 PLANE MOMENT	AXIAL FORCE	1-3 PLANE SHEAR	1-3 PLANE MOMENT	AXIAL TORQ
46	ACTING P-DELTA AXIAL FORCE:				-905.720			
	1	.000			-854.780			
		.000	-.658	51.358				
		24.000	-.658	35.922				
		24.000			-858.548			
	2	.000			.000			
		24.000			.000			
	3	.000			-49.044			
		.000	-44.595	3373.088		-75.759	5573.075	
		24.000	-44.595	2321.987		-75.759	3781.119	
		24.000			-49.044			
47	ACTING P-DELTA AXIAL FORCE:				-909.488			
	1	.000			-858.548			
		.000	-.602	35.922				
		24.000	-.602	21.772				
		24.000			-862.316			
	2	.000			.000			
		24.000			.000			
	3	.000			-49.044			
		.000	-39.663	2321.987		-65.715	3781.119	
		24.000	-39.663	1386.070		-65.715	2225.006	
		24.000			-49.044			
48	ACTING P-DELTA AXIAL FORCE:				-913.256			
	1	.000			-862.316			
		.000	-.494	21.772				
		24.000	-.494	10.188				
		24.000			-866.084			
	2	.000			.000			
		24.000			.000			
	3	.000			-49.044			
		.000	-31.792	1386.070		-51.569	2225.006	
		24.000	-31.792	637.145		-51.569	1005.291	
		24.000			-49.044			

CAMELBACK RD BRIDGE AT AGRA FRIA RIVER, TRANSVERSE FRAME, Q500 FLOW

F R A M E E L E M E N T F O R C E S

ELT ID	LOAD COND	DIST ENDI	1-2 PLANE SHEAR	1-2 PLANE MOMENT	AXIAL FORCE	1-3 PLANE SHEAR	1-3 PLANE MOMENT	AXIAL TORQ
49	----------							
	ACTING P-DELTA AXIAL FORCE:				-918.343			
	1	.000			-866.084			
		.000	-.260	10.188				
		40.800	-.260	.000				
		40.800			-872.489			
	2	.000			.000			
		40.800			.000			
	3	.000			-49.044			
		.000	-16.159	637.145		-25.316	1005.291	
		40.800	-16.159	.000		-25.316	.000	
		40.800			-49.044			

STRUCTURAL CALCULATIONS

FOR

INDIAN SCHOOL ROAD BRIDGE

AT

AQUA FRIA RIVER

Registered Professional Engineer (Structural)
CERTIFICATE NO.
14766
ROBERT DAVIS
TURTON
Date Signed 7/9/96
ARIZONA, U.S.A.

Cannon & Associates, Inc.
Consulting Engineers

project no. : CA 94046-1
project : Indian School Rd Bridge
designed by : HM
checked by : GWS
date : 5/96 sht. 1 of 23

BASIS OF ANALYSIS

DESIGN SPECIFICATION

American Association of State Highway and Transportation Officials Standard Specifications for Highway Bridges, 1992 Edition, revised to date.

EXISTING BRIDGE PLANS

As-built bridge plans sheets 1 thru 13 by SAMER, LAHLUM & ASSOCIATES, INC. with Job No. 80-186, dated November 1983, for analysis Piers 13 thru Pier 17. Indian School Road bridge at Agua Fria River, MCDOT Project No. 68074.

As-built bridge plans sheets 2 thru 20 by HOFFMAN-MILLER ENGINEERS, dated April 1978, for analysis Abutments 1, 2, and Piers 1 thru 12, MCDOT Project No. 60300.

GEOTECHNICAL INVESTIGATION

Geotechnical Investigation Report by AGRA Earth & Environmental, Inc., Job No. E95-36, dated 4/15/96. Ultimate downward capacity of driven pile foundations were used with a safety factor of 1.0 under critical flow conditions.

HYDRAULIC DATA

Final Scour Analysis Report by Morrison-Maierle/CSSA, Inc. Dated March 1996.
Q_{500} = 184,000 cfs, Average velocity = 11.6 ft/sec., Angle of attack = 10 degrees
H.W. Elev. = 1,012.43 (Bridge open to traffic)
Total Scour = 24'

INTENT

The intent of these calculations is to analyze the 1983 portion of the bridge (Piers 13 thru 17). These have deep drilled shaft foundations. Abutments 1, 2, and Piers 1 thru 12 are spread footing foundations which are Scour Critical because the elev. of the Bottom of Ftg (983.0') is higher than the elev. of the bottom of the scour hole (976.0').

The structure is 77'-8" wide and consists of two piers with 8.5" clear between piers. The piers are tied together at the deck only. To simplify the problem associated with load transfer by the deck, analyze as two separate bridges consisting of one pier each.

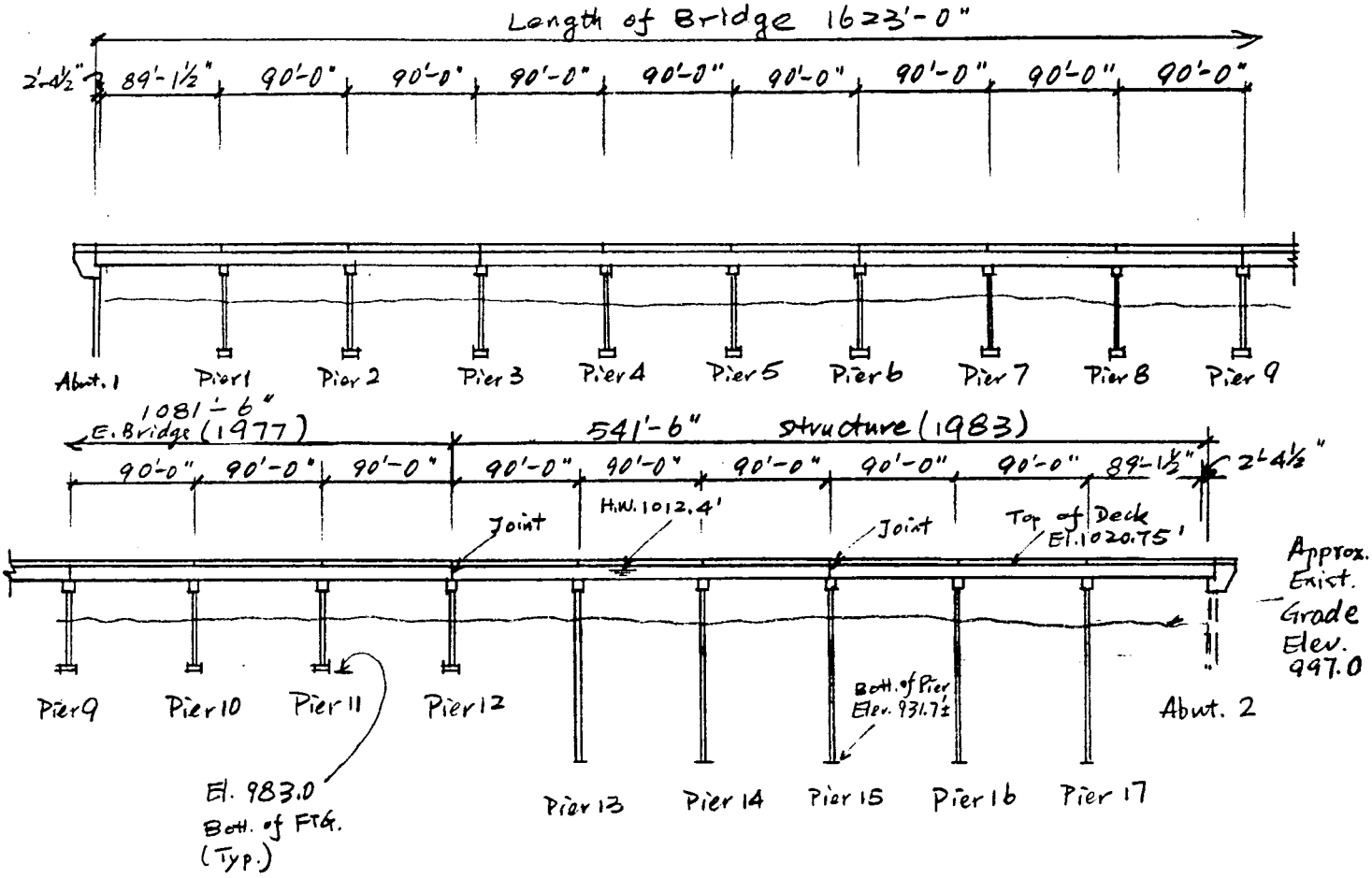

Section @ Const. ℄

18 Span Precast Prestressed Concrete Girder Bridge

Skew 11°

Cannon & Associates, Inc.
Consulting Engineers

project no. : CA 94046-1
project : Indian School Rd Bridge
designed by : HM
checked by : GWS
date : 5/96 sht. 3 of 23

Pier Analysis:

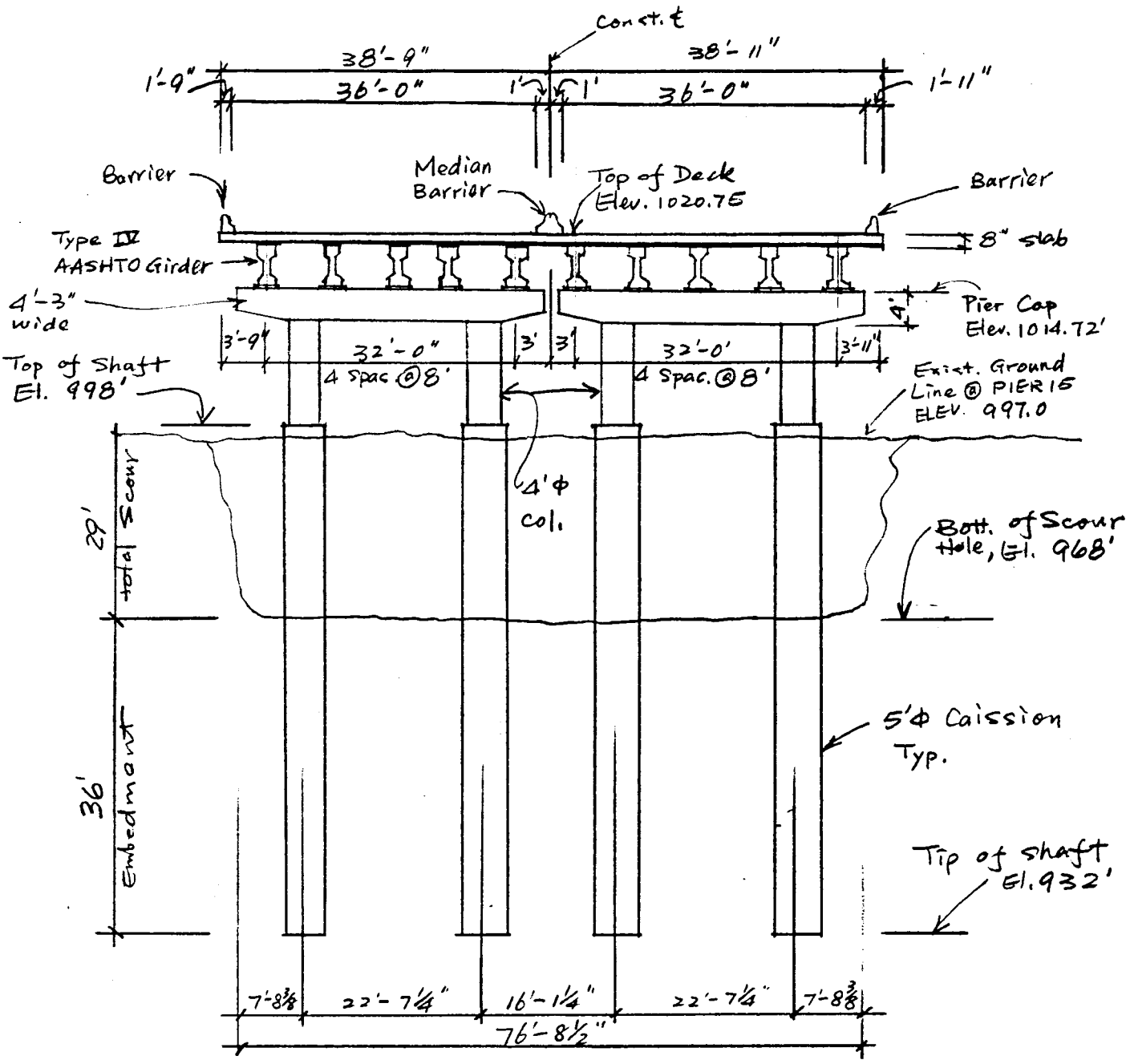

Piers 13 thru. 17 Elevation (1983 Bridge)

Cannon & Associates, Inc.
Consulting Engineers

project no. : CA 9404b-1
project : Indian School Rd. Bridge
designed by : HM
checked by : GWS
date : 5/96 sht. 4 of 23

Pier Analysis (CONT.)

Dead Load Superstructure

Deck: $8''/12'' (38.92')(0.15^{k}/ft^3)$ = 3.9 k/'

Barrier (ADOT B-21.18): $(0.0918 + 0.1178/2)(27\ ft^3/cu.yd.)(0.15^{k}/ft^3)$ = 0.61 k/'

Girders: $(789''/144)(0.15^{k}/ft^3)(5)$ = 4.1 k/'

Diaphragms: $[(46''/12)32' - 4(\frac{789}{144})](8''/12)(0.15)(1/90')$ = 0.11 k/'

Misc.: = 0.08 k/'

DL = 8.8 k/'

Pier Loads

Dead Load (simple supported span, L = 90')

Max. Superstructure Reaction = $8.8^{k}/'(90')$ = 792^{k}

Pier Cap: $(4.25' \times 4' \times 38')(0.15^{k}/ft^3)$ = 97^{k}

Col. & Shaft: $[\pi(2)^2 12.72' + \pi(2.5)^2(25')](0.15^{k}/ft^3)(2)$ = 195^{k} (above scour line)

Diaphragm @ Pier Cap: $[(\frac{54+4''}{12})(32') - 4(\frac{789}{144})](1.33')(0.15)$ = 26.5^{k}

DL = 1110.5^{k}

Total DL per shaft = $1110.5^{k}/2$ = 555.3^{k}/shaft

Live Load

Bridge width allows for three 12' lanes of live load on each individual pier, bridge is currently serving 2 lanes, therefore, use 2 lanes for analysis.

HS 20, 2 lanes, LL reaction = 95.2^{k}/lane (Per continuous beam analysis.)

LL = $95.2^{k}(2)/2$ shafts = 95.2^{k}/shaft

Check Capacity of Shafts (Based on soil capacity)

Service Dead Load = 555.3^{k}/shaft

Service Live Load = 95.2^{k}/shaft

650.5^{k}/shaft

(See AGRA Chart, sht. 7)

Ultimate Shaft Capacity = $2030^{k} > 650.5^{k}$ O.K.

Pier Analysis (CONT.)

check capacity of shafts (CONT.)

∴ Check Lateral Stability.

check if shaft is flexible or rigid : (check with 5' ϕ)

$$n_h = \left(\frac{420\ pci - 0\ pci}{40'}\right)(5') = 52.5\ \#/in^3$$

slope of "K" per AGRA chart. see sht 23, Δ=½"

$$EI = \frac{0.4\ E_c I_g}{1+\beta d} = \frac{0.4(3122000)(636173)}{1.0}$$

use 0.0

$E_c = 3122$ ksi

$I_g = 636173\ in^4$

(ϕ=5')

$$= 7.94 \times 10^{11}\ \#\text{-}in^2$$

$$\eta = \sqrt[5]{\frac{n_h}{EI}} = \sqrt[5]{\frac{52.5}{7.94 \times 10^{11}}} = 0.0092 \quad (\text{sand})$$

$$\eta L = 0.0092(41')(12'') = 4.53 > 2.0$$

∴ Consider as flexible shaft.

Pier Analysis (CONT.)

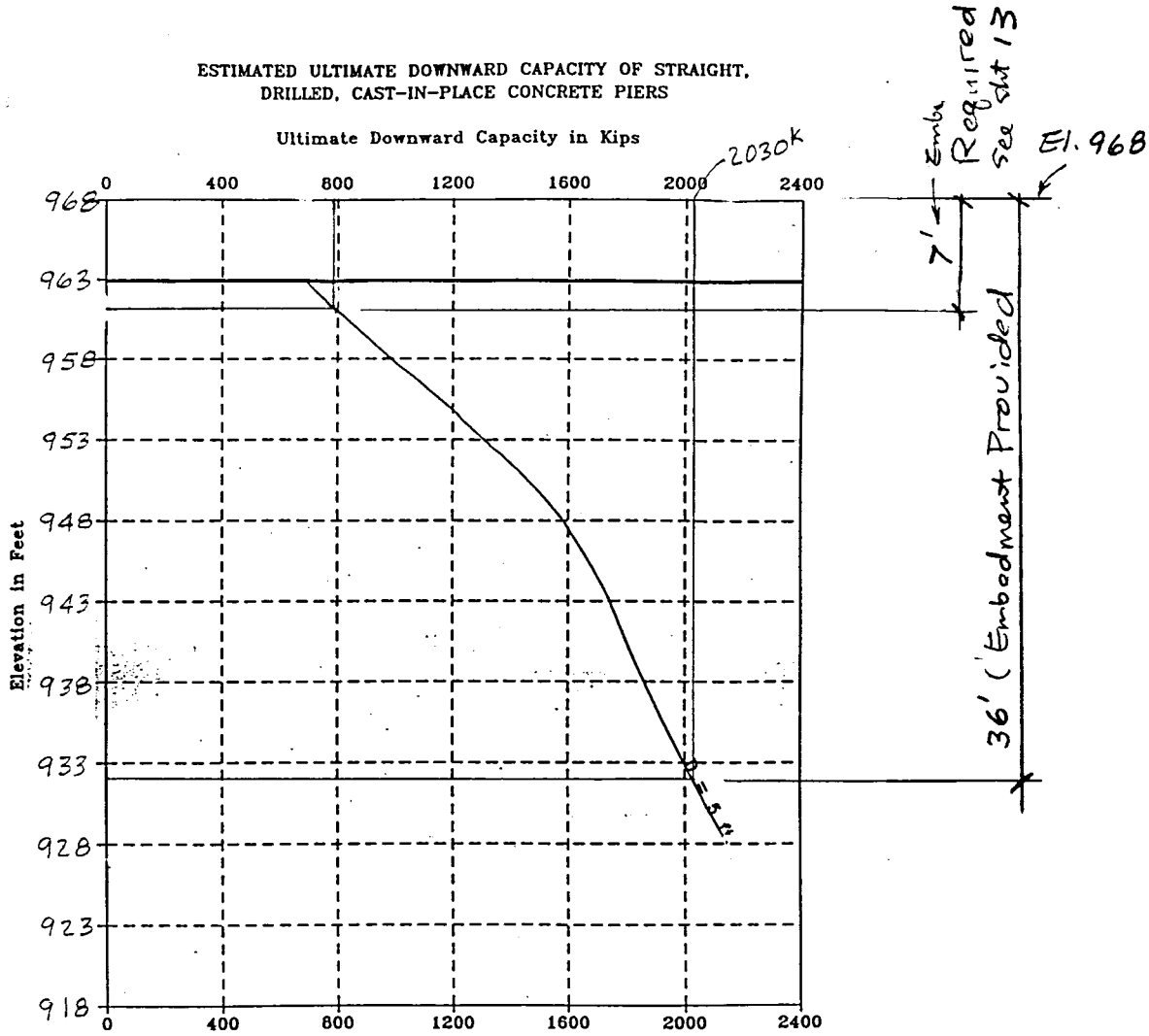

AGRA
Earth & Environmental, Inc.

Reference: Geotechnical Investigation Report, AGRA Earth & Environmental, Inc., Job No. E95-36, Dated 4/15/96

Cannon & Associates, Inc.
Consulting Engineers

project no.: 94046-1
project: Indian School Rd Bridge
designed by: HM
checked by: GWS
date: 5/96 sht. 7 of 23

Pier Analysis (cont.)

DL Per Girder

$(792 + 26.5)/5$ girders $= 163.7^{k}$/girder

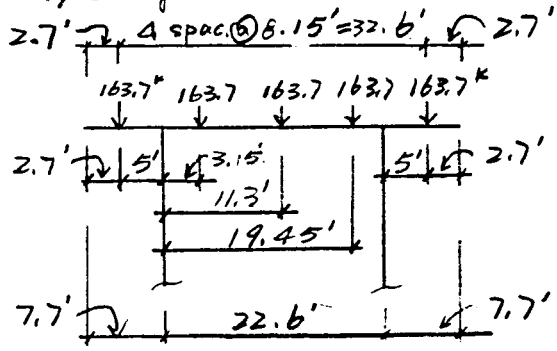

Wheel Load Distribution (from deck to girder, HS20. 2 lanes)

LL per Girder

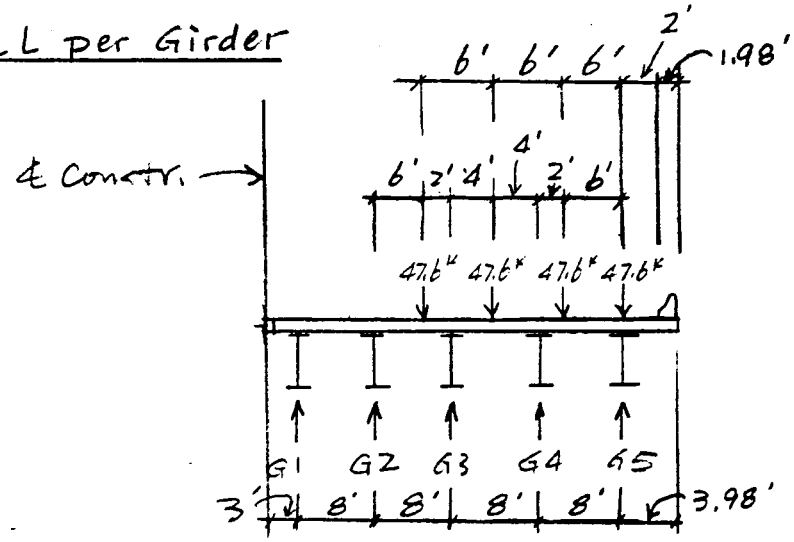

see sht. 5

wheel Load $= 95.2^{k}/2$
$= 47.6^{k}$/wheel

$G1 = 0$

$G2 = 47.6\left(\frac{2}{8}\right) = 11.9^{k}$

$G3 = 47.6\left(\frac{6+4}{8}\right) = 59.5^{k}$

$G4 = 47.6\left(\frac{4+6}{8}\right) = 59.5^{k}$

$G5 = 47.6\left(\frac{8+2}{8}\right) = 59.5^{k}$

190.4^{k}

LL on Pier Cap

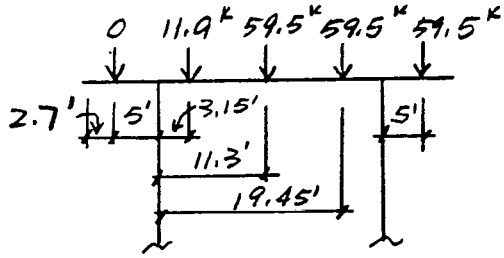

Pier Analysis (CONT.)

Lateral Analysis

Stream Flow Forces (Q500 Flow Condition)

H.W. Elevation = 1012.43'
Avg. Velocity = 11.6 ft/sec
Angle of Attack = 10°, use 15° for analysis (Attack ∡ + 5°).
Total Scour = 29'.

Stream Force Criteria: (use half bridge as analysis unit)

- Clear distance between columns = 22.6' − 4' = 18.6'.
- ∴ Assume each shaft carry stream force individually. Use obstruction width based on 2' of debris at each side of projected area.
- Assume total stream force above the bottom of the pier cap is equally distributed to each shaft.
- Use K = 1.4 for shafts with debris from H.W. Elev. to exist grade.

Individual Pier Caps Tied togather by deck.

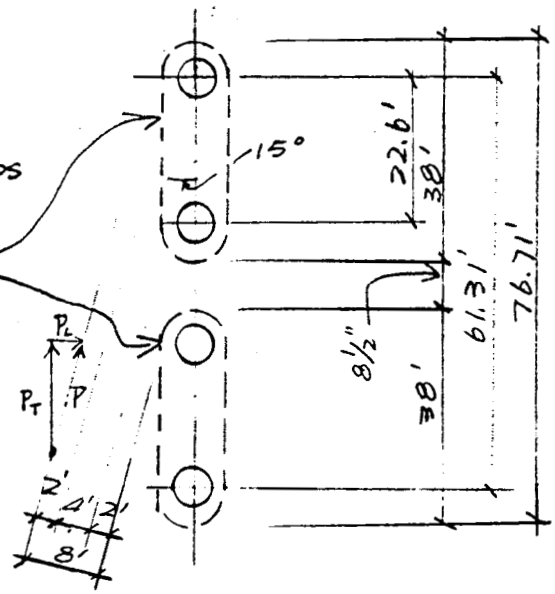

Projected Width: (@ shafts)
4' + 2(2') = 8'

Projected width: (@ cap)
76.71 (sin 15°) + 2 (2')
= 23.86'

Cannon & Associates, Inc.
Consulting Engineers

project no.: 94046-1
project: Indian School Rd Bridge
designed by: HM
checked by: GWS
date: 5/96 sht. 9 of 23

Pier Analysis (CONT.)

Stream Flow (CONT.)

$$P_{max.} = 2P_{avg.} = 2[1.4(11.6)^2/1000] = 0.377 \ ^{k}/_{ft^2}$$

(ft/sec)

$$\Delta P = 0.377/(1012.43 - 997) = 0.377/15.43' = 0.0244 \ ^{KSF}/_{ft}$$

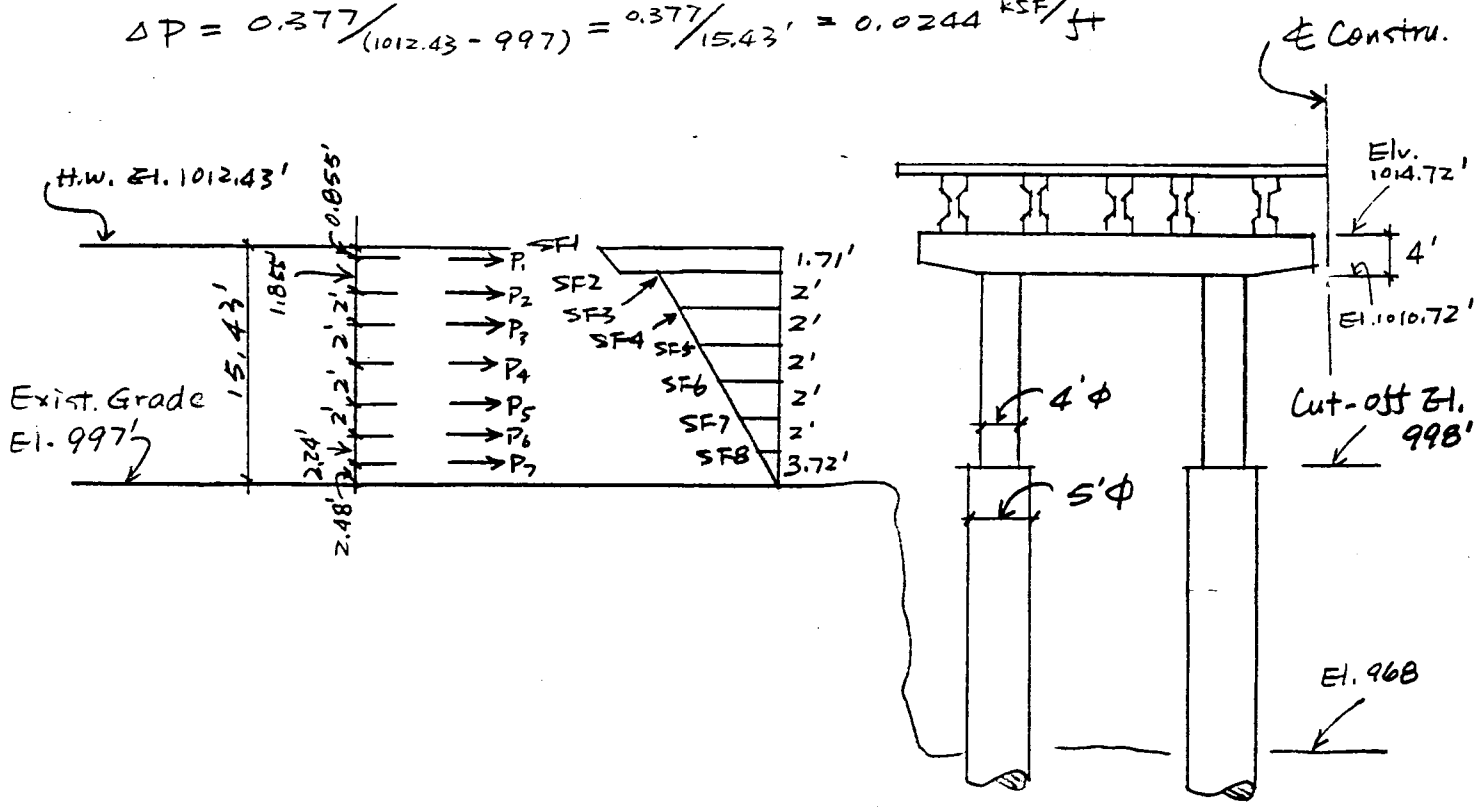

SF1 = 0.377 KSF (23.86)/4 shafts	= 2.25	k/'
SF2 = [0.377 - 1.71 (0.0244)] (23.86)/4	= 2.0	k/'
SF3 = [0.377 - 1.71 (0.0244)] (8')	= 2.68	k/'
SF4 = [0.377 - 3.71 (0.0244)] (8')	= 2.29	k/'
SF5 = [0.377 - 5.71 (0.0244)] (8')	= 1.90	k/'
SF6 = [0.377 - 7.71 (0.0244)] (8')	= 1.51	k/'
SF7 = [0.377 - 9.71 (0.0244)] (8')	= 1.12	k/'
SF8 = [0.377 - 11.71 (0.0244)] (8')	= 0.73	k/'

Pier Analysis (CONT.)

Stream Flow (CONT.)

Equivalent Concentrated Loads from Stream Force on Pier:

$P_1 = (2.25 + 2.0)(1/2)(1.71')$ $= 3.63^k$
$P_2 = (2.68 + 2.29)(1/2)(2')$ $= 4.97$
$P_3 = (2.29 + 1.9)(1/2)(2)$ $= 4.19$
$P_4 = (1.9 + 1.51)(1/2)(2)$ $= 3.41$
$P_5 = (1.51 + 1.12)(1/2)(2)$ $= 2.63$
$P_6 = (1.12 + 0.73)(1/2)(2)$ $= 1.85$
$P_7 = (0.73 + 0)(1/2)(3.72)$ $= 1.36^k$

Perpendicular to pier cap — parallel to pier cap

Resolve total forces into longitudinal and transverse directions and divide equally between each column:

Transverse Direction: $\cos 15° = 0.966$
Longitudinal Direction: $\sin 15° = 0.259$

$P_{1T} = 3.63(0.966)$	$= 3.51^k$	$P_{1L} = 0.94^k$
$P_{2T} = 4.97(0.966)$	$= 4.80$	$P_{2L} = 1.29$
$P_{3T} = 4.19(0.966)$	$= 4.05$	$P_{3L} = 1.09$
$P_{4T} = 3.41(0.966)$	$= 3.29$	$P_{4L} = 0.88$
$P_{5T} = 2.63(0.966)$	$= 2.54$	$P_{5L} = 0.68$
$P_{6T} = 1.85(0.966)$	$= 1.79$	$P_{6L} = 0.48$
$P_{7T} = 1.36(0.966)$	$= 1.31^k$	$P_{7L} = 0.35^k$

Pier Analysis (cont.)

Stream Flow (cont.)

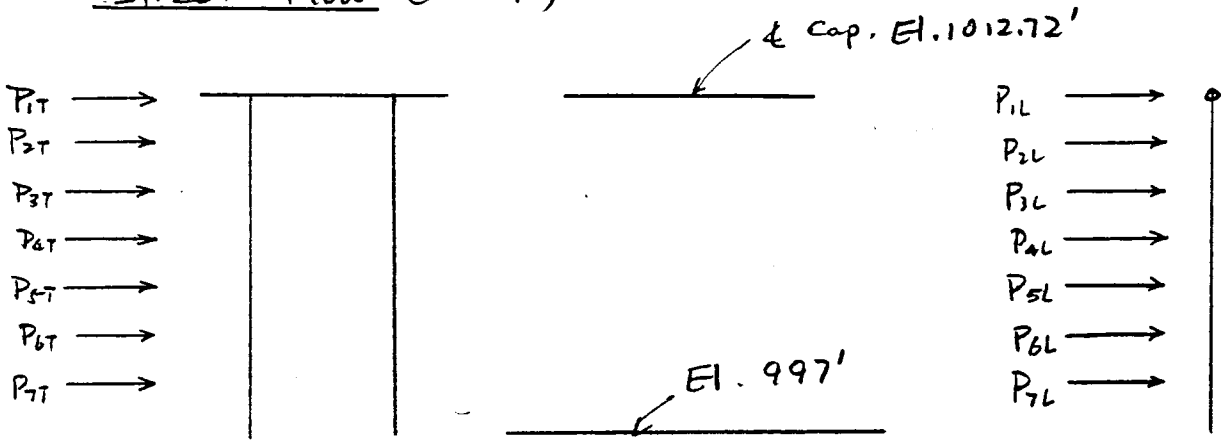

Transverse Model (Loads per shaft)

Longitudinal Model (Loads per shaft)

See Computer Analysis (sheet 19) for Models of Pier Frames and Results.

Pier Analysis (CONT.)

Results From Transverse Frame Analysis

Top of Column: (Tailing shaft. Mem. 27)

$P_{DL} = 463^K$ $P_{LL} = 154^K$ $P_{SF} = 38$

$M_{DL} = 38.6^{1-K}$, $M_{LL} = 24.2^{1-K}$ $M_{SF} = 426.5^{1-K}$

Bott. of shaft: (Point of Max. Moment, Mem 35)

$P_{DL} = 599^K$, $P_{LL} = 154^K$, $P_{SF} = 38^K$

$M_{DL} = 9.1^{1-K}$, $M_{LL} = 21.4^{1-K}$ $M_{SF} = 526.2^{1-K}$

Results From Longitudinal Frame Analysis

Top of Column: (mem 1)

$P_{DF} = 0$, $M_{SF} = 0$

Bott. of Shaft: (Point of Max. Moment, Mem 8)

$P_{SF} = 0$, $M_{SF} = 248.7^{1-K}$

Check Capacity Based on Strength of Soil

$P_{TL} = 599 + 154 + 38 = 791^K$

Shaft Tip Elv. = 932'

Ultimate Capacity of Soil = 2030^K (sht. 7) $> 791^K$ O.K.
(w/ safty factor = 1.0)

Embedment Depth Provided = 36'
Embedment Depth Required = 968' − 961' = 7' } sheet 7. O.K.

Pier Analysis (cont.)

check capacity based on strength of Col. & Shaft:

(Use AASHTO Group VII Loading + Live Load + Impact, No Earthquake)

$$1.3[\cancel{\beta_D}^{\to 1.0} D + \cancel{\beta_{L+I}}^{\to 1.0}(L+I) + \cancel{\beta_E E}^{\to 0} + 1.0\cancel{B}^{\to 0} + 1.0\,SF]$$

$$I = \frac{50}{90+125} = 0.23$$

∴ Top of Colu.: (Mem. 27)

$$P_{u.\,col.} = 1.3[1.0(463) + 1.0(1.23)(154) + 1.0(38)] = 897^{k}$$

$$M_{u.\,col.\,tr.} = 1.3[1.0(38.6) + 1.0(1.23)(24.2) + 1.0(426.5)] = 643^{\prime-k}$$

$$M_{u.\,col.\,long.} = 0 \qquad = 0$$

Bott. of Shaft: (Mem. 35 Point of Max. Moment)

$$P_u = 1.3[1.0(599) + 1.23(154) + 1.0(38)] = 1075^{k}$$

$$M_{u\,tr.} = 1.3[1.0(9.1) + 1.23(21.4) + 1.0(526.2)] = 730.1^{\prime-k}$$

$$M_{u.\,long} = 1.3[1.0(248.7)] \qquad = 323.3^{\prime-k}$$

Column Slenderness

Transverse Direction: $K \approx 1.2$, $\ell = 42.72'$, $r = 0.25(4')(12''/') = 12''$

$$K\ell/r = 51.26 > 22$$

∴ Moment must be magnified.

Longitudinal Direction: $K \approx 2.1$

Pier Analysis (CONT.)

$$\delta_s = \frac{1}{1 - \frac{\Sigma P_u}{\phi \Sigma P_c}} \qquad P_c = \frac{\pi^2 E I}{(K l_u)^2}$$

0.4 Ig for slenderness

$$P_{c,\,col.,\,tr.} = \frac{3.14^2 (3122)(104178)}{[1.2(42.72 \times 12)]^2} = 8482^K$$

$$P_{c.,\,col.,\,long.} = \frac{3.14^2 (3122)(104178)}{[2.1 \times 42.72 \times 12]^2} = 2770^K$$

$$\delta_{s.tri.} = \frac{1}{1 - \frac{897}{0.7 \times 8482}} = 1.18$$

$$\delta_{s.long.} = \frac{1}{1 - \frac{897}{0.7 \times 2770}} = 1.86$$

0.4 Ig for slenderness.

$$P_{c.,\,shaft.\,tri} = \frac{3.14^2 (3122)(254469)}{[1.2(42.72 \times 12)]^2} = 20720^K$$

$$P_{c,\,shaft.\,long} = \frac{3.14^2 (3122)(254469)}{[2.1(42.72 \times 12)]^2} = 6766^K$$

$$\delta_{s.tri.} = \frac{1}{1 - \frac{1075}{0.7(20720)}} = 1.08$$

$$\delta_{s.long.} = \frac{1}{1 - \frac{1075}{0.7(6766)}} = 1.29$$

Pier Analysis (cont.)

Max. col. Loadings (Top of Column)

$P_u = 897^k$

$M_{u.tr.} = 1.18(643.3) = 759'^{-k}$

$M_{u.long.} = 0$

} Mem. 27

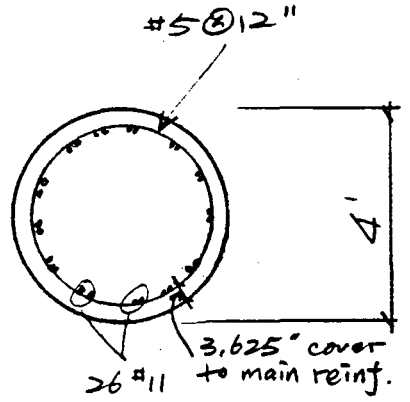

$f'_c = 3000$ psi, $f_y = 60$ ksi

ULTIMATE STRENGTH DESIGN
OF
REINFORCED CONCRETE COLUMNS

```
CODER   :  TB
CHECKER :  HM
DATE    :   7- 5-96
JOB IDENTIFICATION :  INDIAN SCHOOL RD BRIDGE,PIER COL.
DATA USED
**** ****
ANALYSIS OF ROUND COLUMN - SIZE : DIAMETER =  48.00 IN.
STRESSES : FC'     = 3.000 K.S.I.  FC = 2.550 K.S.I.  FY      = 60.000 K.S.I.
           E-CONC. = 3122. K.S.I.                     E-STEEL = 29000. K.S.I.
           MAX. CONC. STRAIN (EU) =  .003
CAPACITY REDUCTION FACTORS :
COMPRESSION =  .70     FLEXURE =  .90
REINFORCEMENT DATA :          CIRCULAR REINFORCEMENT PATTERN

WITH- 26 NO. 11 BARS   AST= 40.56 SQ.IN. =  2.25PCT.   COVER= 3.62 IN.
BAR SPACING =  4.75 IN.
OUTPUT
******
```

LOAD	APPLIED LOADS			COMPUTED STRENGTH			
CASE	AP	AMX	AMY	UP	UMX	UMY	UP/AP
1	897.	759.	0.	2625.	2223.	0.	2.928 >1.0 o.k.

∴ Concrete Colu. adequate for Q 500.

Pier Analysis (CONT.)

Max. Shaft Loadings (Point of Max. Moment)

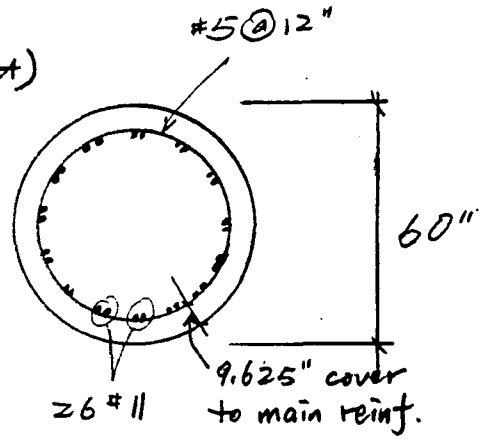

$P_u = 1075^k$

$M_{u.tri} = 1.08(730.1) = 789'^{-k}$

$M_{u.long} = 1.29(323.3) = 417'^{-k}$

$f'_c = 3000$ psi, $f_y = 60$ ksi

ULTIMATE STRENGTH DESIGN
OF
REINFORCED CONCRETE COLUMNS

```
CODER   :  TB
CHECKER :  HM
DATE    :   7- 5-96
JOB IDENTIFICATION :  INDIAN SCHOOL RD BRIDGE,PIER SHAFT
DATA USED
**** ****
ANALYSIS OF ROUND COLUMN - SIZE : DIAMETER =  60.00 IN.
STRESSES : FC'     = 3.000 K.S.I.  FC = 2.550 K.S.I.  FY      = 60.000 K.S.I.
           E-CONC. = 3122. K.S.I.                     E-STEEL = 29000. K.S.I.
           MAX. CONC. STRAIN (EU) =  .003
CAPACITY REDUCTION FACTORS :
COMPRESSION =  .70     FLEXURE =  .90
REINFORCEMENT DATA :          CIRCULAR REINFORCEMENT PATTERN

WITH- 26 NO. 11 BARS   AST= 40.56 SQ.IN. =  1.44PCT.   COVER= 9.62 IN.
BAR SPACING =  4.75 IN.
OUTPUT
******
```

LOAD	APPLIED LOADS			COMPUTED STRENGTH			
CASE	AP	AMX	AMY	UP	UMX	UMY	UP/AP
1	1075.	789.	417.	3866.	2848.	1505.	3.602 >1.0 o.k.

$\therefore$ Conc. Drilled Shaft adequate for Q500.

Summary of Results

The Piers Are Vertically and Laterally Stable For Q500 Flow Conditions.

COMPUTER ANALYSIS

Computer Models

Transverse Pier Frame Model

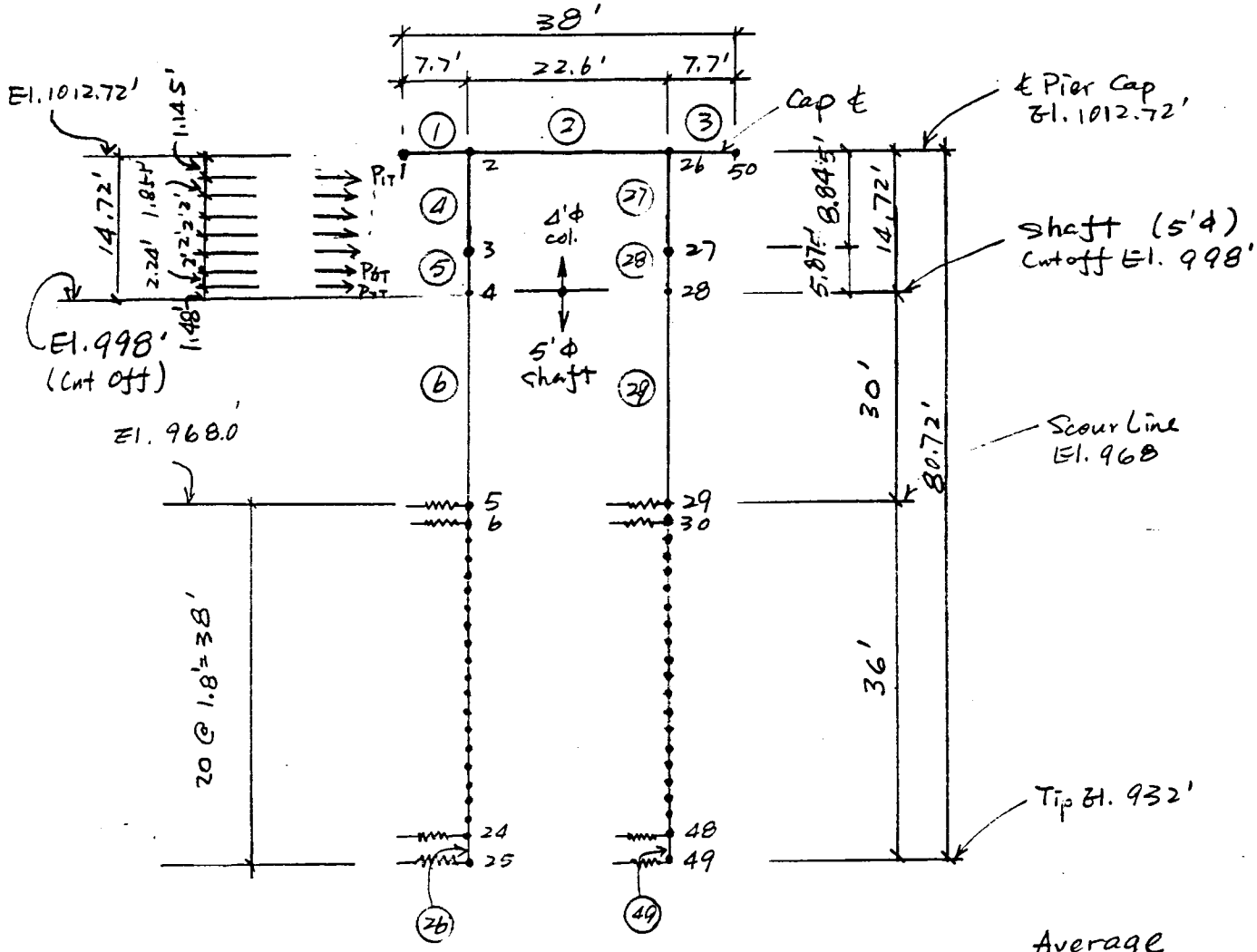

Average

$I_{cap} = \frac{1}{12}(51)(48)^3 = 470016\ in^4$, $A_{cap} = 2448\ in^2$, $W_{cap} = 0.198\ k/in$, $E_{cap} = 3122\ ksi$

$I_{col} = 1.0 I_g = 1.0\left(\frac{1}{64} \times \pi \times 48^4\right) = 260576\ in^4$, $A_{col.} = 1809\ in^2$, $w = 1.157$, $E = 3122\ ksi$

$I_{shaft} = 1.0 I_g = 1.0\left(\frac{1}{64} \cdot \pi \cdot 60^4\right) = 636172\ in^4$, $A_{shaft} = 2827\ in^2$, $w = 0.245$, $E = 3122\ ksi$.

Note: Use I_g for col. & shaft for frame analysis.

Computer Model

Longitudinal Model (cantilever)

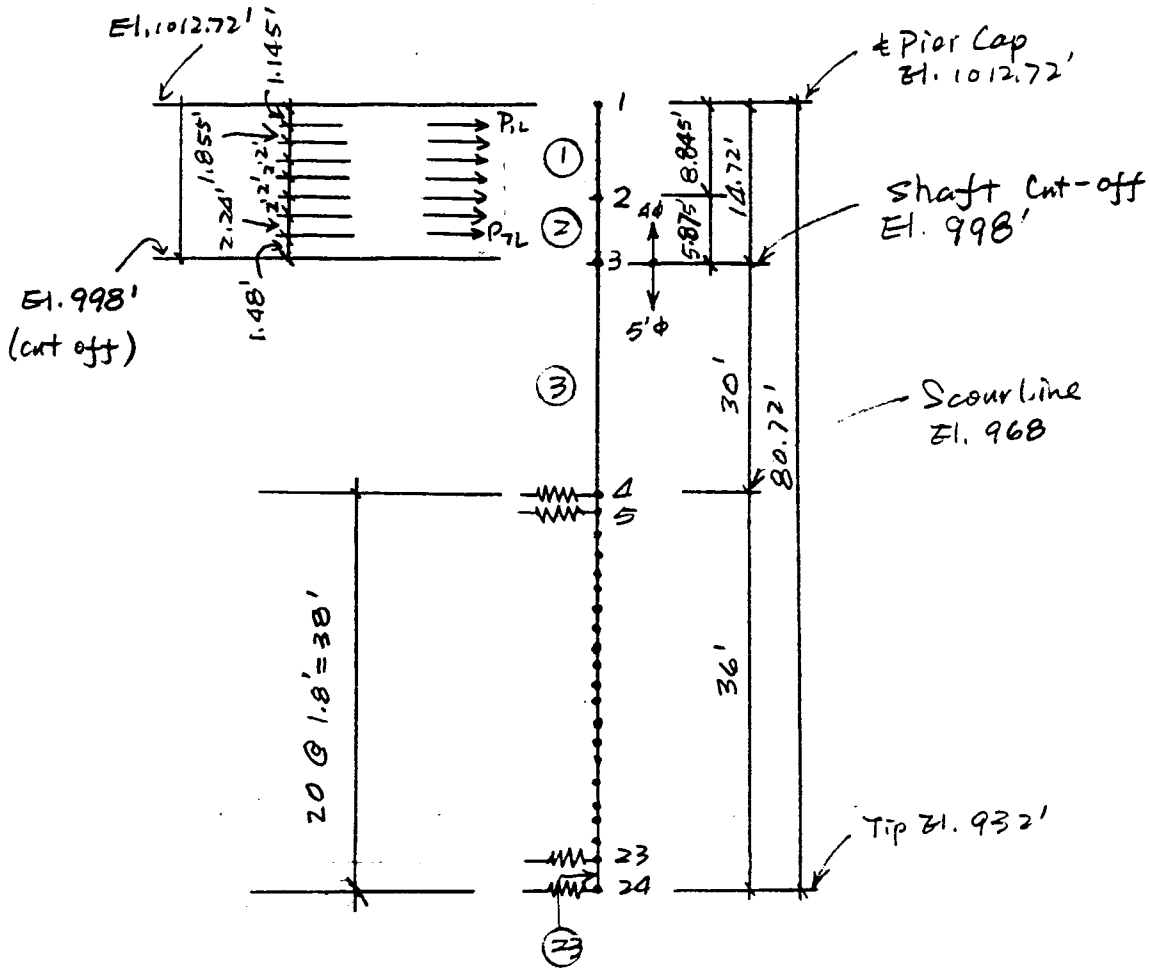

Cannon & Associates, Inc.
Consulting Engineers

project no. : 94046-1
project : Indian School Rd. Bridge
designed by : HM
checked by : GWS
date : 5/96 sht. 21 of 23

Computer Models

Spring Constants

Based on lateral subgrade modulus (k) provided by AGRA charts (sheet 23). Spring Constants = k(shaft ϕ)(Node Spacing)
= k(60")(21.6")

Use ½" Deflection Curve

Depth below Scour Line (ft)	Subgrade Modulus (k) (pci)	Spring Constant K/"
0	0	0
1.8	14	18
3.6	30	39
5.4	43	56
7.2	58	75
9.0	74	96
10.8	89	115
12.6	104	135
14.4	121	157
16.2	137	178
18.0	155	201
19.8	173	224
21.6	193	250
23.4	212	275
25.2	234	303
27.0	256	332
28.8	279	362
30.6	303	393
32.4	326	422
34.2	350	454
36.0	373 (60")(21.6"/2)	242

Pier Analysis (cont.)

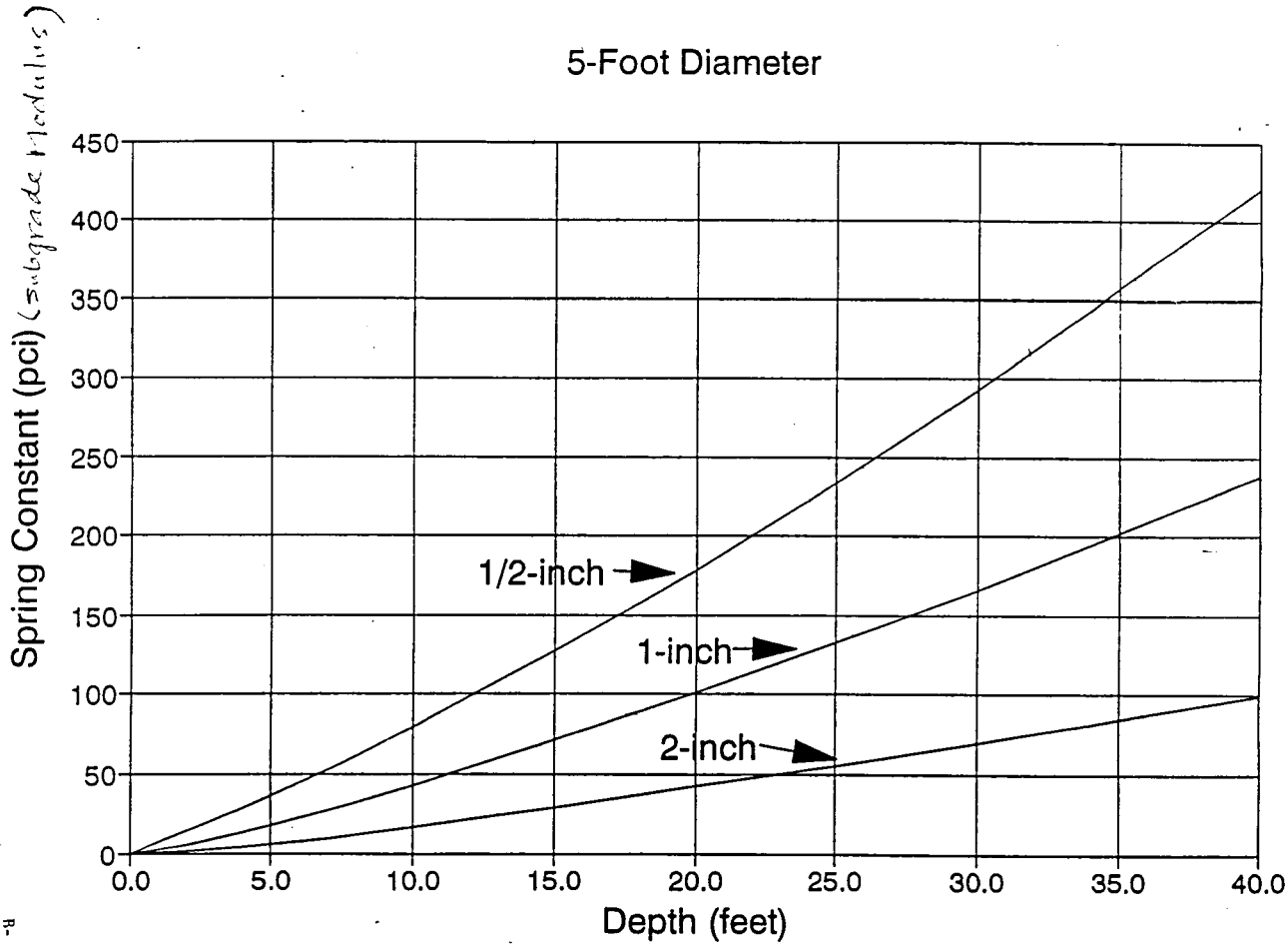

Reference: Geotechnical Investigation Report, AGRA Earth & Environmental, Inc., Job No. E95-36, dated 4/15/96.

7/5/90

INDIAN SCHOOL RD BRIDGE AT AQUA FRIA RIVER, TRANS. FRAME, Q500 FLOW

F R A M E E L E M E N T F O R C E S

ELT ID	LOAD COND	AXIAL FORCE	DIST ENDI	1-2 PLANE SHEAR	1-2 PLANE MOMENT	1-3 PLANE SHEAR	1-3 PLANE MOMENT	AXIAL TORQ
1								
	1	.00						
			.0	.00	.00			
			32.4	-6.42	-103.93			
			92.4	-182.00	-10667.24			
	2	.00						
			.0	.00	.00			
			92.4	.00	.00			
	3	.00						
			.0	.00	.00			
			92.4	.00	.00			
2								
	1	-.92						
			.0	272.40	-11130.34			
			37.8	264.91	-975.12			
			135.6	81.85	7976.73			
			233.4	-101.21	-975.12			
			271.2	-272.40	-11130.34			
	2	-.90						
			.0	36.33	-617.65			
			37.8	36.33	755.52			
			135.6	24.43	3144.50			
			233.4	-35.07	-285.63			
			271.2	-94.57	-3860.48			
	3	.00						
			.0	-37.74	5117.64			
			271.2	-37.74	-5117.64			
3								
	1	.00						
			.0	182.00	-10667.24			
			60.0	170.12	-103.93			
			92.4	.00	.00			
	2	.00						
			.0	59.50	-3570.00			
			60.0	59.50	.00			
			92.4	.00	.00			
	3	.00						
			.0	.00	.00			
			92.4	.00	.00			
4								
	1	-462.73						
			.0	-.92	463.10			
			106.1	-.92	365.25			
	2	-36.33						
			.0	-.90	617.65			
			106.1	-.90	521.71			
	3	37.74						
			.0	.00	-5117.64			
			13.7	.00	-5117.64			
			36.0	3.51	-5039.51			
			60.0	8.31	-4840.07			
			84.0	12.36	-4543.43			

INDIAN SCHOOL RD BRIDGE AT AQUA FRIA RIVER, TRANS. FRAME, Q500 FLOW

F R A M E E L E M E N T F O R C E S

ELT ID	LOAD COND	AXIAL FORCE	DIST ENDI	1-2 PLANE SHEAR	1-2 PLANE MOMENT	1-3 PLANE SHEAR	1-3 PLANE MOMENT	AXIAL TORQ
			106.1	15.65	-4196.93			
27								
	1	-462.73						
			.0	.92	-463.10			
			106.1	.92	-365.25			
	2	-154.07						
			.0	.90	-290.48			
			106.1	.90	-194.54			
	3	-37.74						
			.0	.00	-5117.64			
			13.7	.00	-5117.64			
			36.0	3.51	-5039.51			
			60.0	8.31	-4840.07			
			84.0	12.36	-4543.43			
			106.1	15.65	-4196.93			
5								
	1	-476.59						
			.0	-.92	365.25			
			70.5	-.92	300.26			
	2	-36.33						
			.0	-.90	521.71			
			70.5	-.90	457.98			
	3	37.74						
			.0	18.19	-4196.93			
			24.0	18.19	-3760.37			
			50.9	19.98	-3223.31			
			70.5	21.29	-2805.60			
28								
	1	-476.59						
			.0	.92	-365.25			
			70.5	.92	-300.26			
	2	-154.07						
			.0	.90	-194.54			
			70.5	.90	-130.81			
	3	-37.74						
			.0	18.19	-4196.93			
			24.0	18.19	-3760.37			
			50.9	19.98	-3223.31			
			70.5	21.29	-2805.60			
6								
	1	-526.23						
			.0	-.92	300.26			
			360.0	-.92	-31.63			
	2	-36.33						
			.0	-.90	457.98			
			360.0	-.90	132.58			
	3	37.74						
			.0	21.29	-2805.60			
			360.0	21.29	4858.80			
29								
	1	-526.23						
			.0	.92	-300.26			

INDIAN SCHOOL RD BRIDGE AT AQUA FRIA RIVER, TRANS. FRAME, Q500 FLOW

F R A M E E L E M E N T F O R C E S

ELT ID	LOAD COND	AXIAL FORCE	DIST ENDI	1-2 PLANE SHEAR	1-2 PLANE MOMENT	1-3 PLANE SHEAR	1-3 PLANE MOMENT	AXIAL TORQ
			360.0	.92	31.63			
	2	-154.07						
			.0	.90	-130.81			
			360.0	.90	194.59			
	3	-37.74						
			.0	21.29	-2805.60			
			360.0	21.29	4858.80			
7								
	1	-572.97						
			.0	-.92	-31.63			
			21.6	-.92	-51.54			
	2	-36.33						
			.0	-.90	132.58			
			21.6	-.90	113.05			
	3	37.74						
			.0	21.29	4858.80			
			21.6	21.29	5318.66			
8								
	1	-578.26						
			.0	-.86	-51.54			
			21.6	-.86	-70.19			
	2	-36.33						
			.0	-.89	113.05			
			21.6	-.89	93.90			
	3	37.74						
			.0	18.94	5318.66			
			21.6	18.94	5727.81			
9								
	1	-583.56						
			.0	-.75	-70.19			
			21.6	-.75	-86.46			
	2	-36.33						
			.0	-.85	93.90			
			21.6	-.85	75.55			
	3	37.74						
			.0	14.57	5727.81			
			21.6	14.57	6042.62			
10								
	1	-588.85						
			.0	-.61	-86.46			
			21.6	-.61	-99.72			
	2	-36.33						
			.0	-.80	75.55			
			21.6	-.80	58.33			
	3	37.74						
			.0	9.26	6042.62			
			21.6	9.26	6242.67			
11								
	1	-594.14						
			.0	-.46	-99.72			
			21.6	-.46	-109.55			
	2	-36.33						

INDIAN SCHOOL RD BRIDGE AT AQUA FRIA RIVER, TRANS. FRAME, Q500 FLOW

F R A M E E L E M E N T F O R C E S

ELT ID	LOAD COND	AXIAL FORCE	DIST ENDI	1-2 PLANE SHEAR	1-2 PLANE MOMENT	1-3 PLANE SHEAR	1-3 PLANE MOMENT	AXIAL TORQ
			.0	-.73	58.33			
			21.6	-.73	42.54			
	3	37.74						
			.0	3.32	6242.67			
			21.6	3.32	6314.43			
12	----------							
	1	-599.43						
			.0	-.28	-109.55			
			21.6	-.28	-115.66			
	2	-36.33						
			.0	-.65	42.54			
			21.6	-.65	28.47			
	3	37.74						
			.0	-2.91	6314.43			
			21.6	-2.91	6251.51			
13	----------							
	1	-604.72						
			.0	-.11	-115.66			
			21.6	-.11	-118.05			
	2	-36.33						
			.0	-.56	28.47			
			21.6	-.56	16.31			
	3	37.74						
			.0	-8.92	6251.51			
			21.6	-8.92	6058.93			
14	----------							
	1	-610.02						
			.0	.05	-118.05			
			21.6	.05	-116.89			
	2	-36.33						
			.0	-.47	16.31			
			21.6	-.47	6.15			
	3	37.74						
			.0	-14.44	6058.93			
			21.6	-14.44	5747.07			
15	----------							
	1	-615.31						
			.0	.21	-116.89			
			21.6	.21	-112.43			
	2	-36.33						
			.0	-.37	6.15			
			21.6	-.37	-1.92			
	3	37.74						
			.0	-19.31	5747.07			
			21.6	-19.31	5329.96			
16	----------							
	1	-620.60						
			.0	.34	-112.43			
			21.6	.34	-105.07			
	2	-36.33						
			.0	-.28	-1.92			
			21.6	-.28	-7.94			

INDIAN SCHOOL RD BRIDGE AT AQUA FRIA RIVER, TRANS. FRAME, Q500 FLOW

F R A M E E L E M E N T F O R C E S

ELT ID	LOAD COND	AXIAL FORCE	DIST ENDI	1-2 PLANE SHEAR	1-2 PLANE MOMENT	1-3 PLANE SHEAR	1-3 PLANE MOMENT	AXIAL TORQ
	3	37.74						
			.0	-23.32	5329.96			
			21.6	-23.32	4826.31			
17								
	1	-625.89						
			.0	.45	-105.07			
			21.6	.45	-95.29			
	2	-36.33						
			.0	-.19	-7.94			
			21.6	-.19	-11.97			
	3	37.74						
			.0	-26.38	4826.31			
			21.6	-26.38	4256.54			
18								
	1	-631.18						
			.0	.54	-95.29			
			21.6	.54	-83.62			
	2	-36.33						
			.0	-.10	-11.97			
			21.6	-.10	-14.17			
	3	37.74						
			.0	-28.41	4256.54			
			21.6	-28.41	3642.81			
19								
	1	-636.48						
			.0	.60	-83.62			
			21.6	.60	-70.64			
	2	-36.33						
			.0	-.03	-14.17			
			21.6	-.03	-14.71			
	3	37.74						
			.0	-29.40	3642.81			
			21.6	-29.40	3007.83			
20								
	1	-641.77						
			.0	.63	-70.64			
			21.6	.63	-56.95			
	2	-36.33						
			.0	.04	-14.71			
			21.6	.04	-13.86			
	3	37.74						
			.0	-29.30	3007.83			
			21.6	-29.30	2374.97			
21								
	1	-647.06						
			.0	.64	-56.95			
			21.6	.64	-43.23			
	2	-36.33						
			.0	.09	-13.86			
			21.6	.09	-11.90			
	3	37.74						
			.0	-28.10	2374.97			

INDIAN SCHOOL RD BRIDGE AT AQUA FRIA RIVER, TRANS. FRAME, Q500 FLOW

F R A M E E L E M E N T F O R C E S

ELT ID	LOAD COND	AXIAL FORCE	DIST ENDI	1-2 PLANE SHEAR	1-2 PLANE MOMENT	1-3 PLANE SHEAR	1-3 PLANE MOMENT	AXIAL TORQ
			21.6	-28.10	1767.94			
22								
	1	-652.35						
			.0	.61	-43.23			
			21.6	.61	-30.16			
	2	-36.33						
			.0	.13	-11.90			
			21.6	.13	-9.19			
	3	37.74						
			.0	-25.79	1767.94			
			21.6	-25.79	1210.91			
23								
	1	-657.64						
			.0	.54	-30.16			
			21.6	.54	-18.47			
	2	-36.33						
			.0	.14	-9.19			
			21.6	.14	-6.14			
	3	37.74						
			.0	-22.32	1210.91			
			21.6	-22.32	728.81			
24								
	1	-662.94						
			.0	.44	-18.47			
			21.6	.44	-8.97			
	2	-36.33						
			.0	.13	-6.14			
			21.6	.13	-3.22			
	3	37.74						
			.0	-17.64	728.81			
			21.6	-17.64	347.78			
25								
	1	-668.23						
			.0	.30	-8.97			
			21.6	.30	-2.50			
	2	-36.33						
			.0	.10	-3.22			
			21.6	.10	-.97			
	3	37.74						
			.0	-11.71	347.78			
			21.6	-11.71	94.87			
26								
	1	-673.52						
			.0	.12	-2.50			
			21.6	.12	.00			
	2	-36.33						
			.0	.05	-.97			
			21.6	.05	.00			
	3	37.74						
			.0	-4.39	94.87			
			21.6	-4.39	.00			

INDIAN SCHOOL RD BRIDGE AT AQUA FRIA RIVER, TRANS. FRAME, Q500 FLOW

F R A M E E L E M E N T F O R C E S

ELT ID	LOAD COND	AXIAL FORCE	DIST ENDI	1-2 PLANE SHEAR	1-2 PLANE MOMENT	1-3 PLANE SHEAR	1-3 PLANE MOMENT	AXIAL TORQ
49								
	1	-673.52						
			.0	-.12	2.50			
			21.6	-.12	.00			
	2	-154.07						
			.0	-.18	3.92			
			21.6	-.18	.00			
	3	-37.74						
			.0	-4.39	94.87			
			21.6	-4.39	.00			
30								
	1	-572.97						
			.0	.92	31.63			
			21.6	.92	51.54			
	2	-154.07						
			.0	.90	194.59			
			21.6	.90	214.12			
	3	-37.74						
			.0	21.29	4858.80			
			21.6	21.29	5318.66			
31								
	1	-578.26						
			.0	.86	51.54			
			21.6	.86	70.19			
	2	-154.07						
			.0	.81	214.12			
			21.6	.81	231.55			
	3	-37.74						
			.0	18.94	5318.66			
			21.6	18.94	5727.81			
32								
	1	-583.56						
			.0	.75	70.19			
			21.6	.75	86.46			
	2	-154.07						
			.0	.63	231.55			
			21.6	.63	245.09			
	3	-37.74						
			.0	14.57	5727.81			
			21.6	14.57	6042.62			
33								
	1	-588.85						
			.0	.61	86.46			
			21.6	.61	99.72			
	2	-154.07						
			.0	.41	245.09			
			21.6	.41	253.88			
	3	-37.74						
			.0	9.26	6042.62			
			21.6	9.26	6242.67			
34								
	1	-594.14						

INDIAN SCHOOL RD BRIDGE AT AQUA FRIA RIVER, TRANS. FRAME, Q500 FLOW

F R A M E E L E M E N T F O R C E S

ELT ID	LOAD COND	AXIAL FORCE	DIST ENDI	1-2 PLANE SHEAR	1-2 PLANE MOMENT	1-3 PLANE SHEAR	1-3 PLANE MOMENT	AXIAL TORQ
			.0	.46	99.72			
			21.6	.46	109.55			
	2	-154.07						
			.0	.16	253.88			
			21.6	.16	257.37			
	3	-37.74						
			.0	3.32	6242.67			
			21.6	3.32	6314.43			
35	----------							
	1	-599.43						
			.0	.28	109.55			
			21.6	.28	115.66			
	2	-154.07						
			.0	-.10	257.37			
			21.6	-.10	255.27			
	3	-37.74						
			.0	-2.91	6314.43			
			21.6	-2.91	6251.51			
36	----------							
	1	-604.72						
			.0	.11	115.66			
			21.6	.11	118.05			
	2	-154.07						
			.0	-.35	255.27			
			21.6	-.35	247.80			
	3	-37.74						
			.0	-8.92	6251.51			
			21.6	-8.92	6058.93			
37	----------							
	1	-610.02						
			.0	-.05	118.05			
			21.6	-.05	116.89			
	2	-154.07						
			.0	-.58	247.80			
			21.6	-.58	235.37			
	3	-37.74						
			.0	-14.44	6058.93			
			21.6	-14.44	5747.07			
38	----------							
	1	-615.31						
			.0	-.21	116.89			
			21.6	-.21	112.43			
	2	-154.07						
			.0	-.78	235.37			
			21.6	-.78	218.55			
	3	-37.74						
			.0	-19.31	5747.07			
			21.6	-19.31	5329.96			
39	----------							
	1	-620.60						
			.0	-.34	112.43			
			21.6	-.34	105.07			

INDIAN SCHOOL RD BRIDGE AT AQUA FRIA RIVER, TRANS. FRAME, Q500 FLOW

F R A M E E L E M E N T F O R C E S

ELT ID	LOAD COND	AXIAL FORCE	DIST ENDI	1-2 PLANE SHEAR	1-2 PLANE MOMENT	1-3 PLANE SHEAR	1-3 PLANE MOMENT	AXIAL TORQ
	2	-154.07						
			.0	-.95	218.55			
			21.6	-.95	198.11			
	3	-37.74						
			.0	-23.32	5329.96			
			21.6	-23.32	4826.31			
40								
	1	-625.89						
			.0	-.45	105.07			
			21.6	-.45	95.29			
	2	-154.07						
			.0	-1.07	198.11			
			21.6	-1.07	174.89			
	3	-37.74						
			.0	-26.38	4826.31			
			21.6	-26.38	4256.54			
41								
	1	-631.18						
			.0	-.54	95.29			
			21.6	-.54	83.62			
	2	-154.07						
			.0	-1.16	174.89			
			21.6	-1.16	149.81			
	3	-37.74						
			.0	-28.41	4256.54			
			21.6	-28.41	3642.81			
42								
	1	-636.48						
			.0	-.60	83.62			
			21.6	-.60	70.64			
	2	-154.07						
			.0	-1.20	149.81			
			21.6	-1.20	123.80			
	3	-37.74						
			.0	-29.40	3642.81			
			21.6	-29.40	3007.83			
43								
	1	-641.77						
			.0	-.63	70.64			
			21.6	-.63	56.95			
	2	-154.07						
			.0	-1.20	123.80			
			21.6	-1.20	97.83			
	3	-37.74						
			.0	-29.30	3007.83			
			21.6	-29.30	2374.97			
44								
	1	-647.06						
			.0	-.64	56.95			
			21.6	-.64	43.23			
	2	-154.07						
			.0	-1.16	97.83			

INDIAN SCHOOL RD BRIDGE AT AQUA FRIA RIVER, TRANS. FRAME, Q500 FLOW

F R A M E E L E M E N T F O R C E S

ELT ID	LOAD COND	AXIAL FORCE	DIST ENDI	1-2 PLANE SHEAR	1-2 PLANE MOMENT	1-3 PLANE SHEAR	1-3 PLANE MOMENT	AXIAL TORQ
			21.6	-1.16	72.88			
	3	-37.74						
			.0	-28.10	2374.97			
			21.6	-28.10	1767.94			
45								
	1	-652.35						
			.0	-.61	43.23			
			21.6	-.61	30.16			
	2	-154.07						
			.0	-1.06	72.88			
			21.6	-1.06	49.95			
	3	-37.74						
			.0	-25.79	1767.94			
			21.6	-25.79	1210.91			
46								
	1	-657.64						
			.0	-.54	30.16			
			21.6	-.54	18.47			
	2	-154.07						
			.0	-.92	49.95			
			21.6	-.92	30.09			
	3	-37.74						
			.0	-22.32	1210.91			
			21.6	-22.32	728.81			
47								
	1	-662.94						
			.0	-.44	18.47			
			21.6	-.44	8.97			
	2	-154.07						
			.0	-.73	30.09			
			21.6	-.73	14.37			
	3	-37.74						
			.0	-17.64	728.81			
			21.6	-17.64	347.78			
48								
	1	-668.23						
			.0	-.30	8.97			
			21.6	-.30	2.50			
	2	-154.07						
			.0	-.48	14.37			
			21.6	-.48	3.92			
	3	-37.74						
			.0	-11.71	347.78			
			21.6	-11.71	94.87			

7/5/70

INDIAN SCHOOL ROAD BRIDGE AT AQUA FRIA RIVER, LONG. FRAME, Q500 FLOW

F R A M E E L E M E N T F O R C E S

ELT ID	LOAD COND	AXIAL FORCE	DIST ENDI	1-2 PLANE SHEAR	1-2 PLANE MOMENT	1-3 PLANE SHEAR	1-3 PLANE MOMENT	AXIAL TORQ
1								
	1	.00						
			.0	.00	.00			
			13.7	.00	.00			
			36.0	.94	20.92			
			60.0	2.23	74.44			
			84.0	3.32	154.12			
			106.1	4.20	247.11			
2								
	1	.00						
			.0	4.88	247.11			
			24.0	4.88	364.23			
			50.9	5.36	508.31			
			70.5	5.71	620.34			
3								
	1	.00						
			.0	5.71	620.34			
			360.0	5.71	2675.94			
4								
	1	.00						
			.0	5.71	2675.94			
			21.6	5.71	2799.28			
5								
	1	.00						
			.0	4.75	2799.28			
			21.6	4.75	2901.79			
6								
	1	.00						
			.0	2.97	2901.79			
			21.6	2.97	2966.04			
7								
	1	.00						
			.0	.85	2966.04			
			21.6	.85	2984.33			
8								
	1	.00						
			.0	-1.50	2984.33			
			21.6	-1.50	2951.96			
9								
	1	.00						
			.0	-3.92	2951.96			
			21.6	-3.92	2867.28			
10								
	1	.00						
			.0	-6.21	2867.28			
			21.6	-6.21	2733.22			
11								
	1	.00						
			.0	-8.26	2733.22			
			21.6	-8.26	2554.80			
12								
	1	.00						

INDIAN SCHOOL ROAD BRIDGE AT AQUA FRIA RIVER, LONG. FRAME, Q500 FLOW

F R A M E E L E M E N T F O R C E S

ELT ID	LOAD COND	AXIAL FORCE	DIST ENDI	1-2 PLANE SHEAR	1-2 PLANE MOMENT	1-3 PLANE SHEAR	1-3 PLANE MOMENT	AXIAL TORQ
			.0	-10.01	2554.80			
			21.6	-10.01	2338.48			
13								
	1	.00						
			.0	-11.39	2338.48			
			21.6	-11.39	2092.40			
14								
	1	.00						
			.0	-12.37	2092.40			
			21.6	-12.37	1825.24			
15								
	1	.00						
			.0	-12.92	1825.24			
			21.6	-12.92	1546.17			
16								
	1	.00						
			.0	-13.04	1546.17			
			21.6	-13.04	1264.45			
17								
	1	.00						
			.0	-12.74	1264.45			
			21.6	-12.74	989.34			
18								
	1	.00						
			.0	-12.00	989.34			
			21.6	-12.00	730.06			
19								
	1	.00						
			.0	-10.84	730.06			
			21.6	-10.84	495.82			
20								
	1	.00						
			.0	-9.25	495.82			
			21.6	-9.25	295.95			
21								
	1	.00						
			.0	-7.22	295.95			
			21.6	-7.22	140.04			
22								
	1	.00						
			.0	-4.73	140.04			
			21.6	-4.73	37.81			
23								
	1	.00						
			.0	-1.75	37.81			
			21.6	-1.75	.00			

STRUCTURAL CALCULATIONS

FOR

OLD US 80 HIGHWAY BRIDGE

AT

HASSAYAMPA RIVER

Registered Professional Engineer (Structural)
Certificate No.
14766
ROBERT DAVIS
TURTON
Date Signed 7/9/96
ARIZONA, U.S.A.

Robert D. Turton

Cannon & Associates, Inc.
Consulting Engineers

project no. : CA 94046-1
project : Old US 80 Bridge
designed by : HM
checked by : TB
date : 5/96 sht. 1 of 24

BASIS OF ANALYSIS

DESIGN SPECIFICATION

American Association of State Highway and Transportation Officials Standard Specifications for Highway Bridges, 1992 Edition, revised to date.

EXISTING BRIDGE PLANS

As-built bridge plan sheets 24 thru 37 dated Janurary 1994. Old US 80 Highway Bridge at Hassayampa River, Project No. 68399.

GEOTECHNICAL INVESTIGATION

Geotechnical Investigation Report by AGRA Earth & Environmental, Inc., Job No. E95-36, dated 4/15/96. Ultimate downward capacity of driven pile foundations were used with a safety factor of 1.0 under critical flow conditions.

HYDRAULIC DATA

Final Scour Analysis Report by Morrison-Maierle/CSSA, Inc. Dated March 1996.
$Q_{Low\ Chord}$ = 89,100 cfs, Average velocity = 14.5 ft/sec., Angle of attack = 10 degrees,
H.W. Elev. = 849.70 (Bridge not open to traffic)
Total Scour = 39'

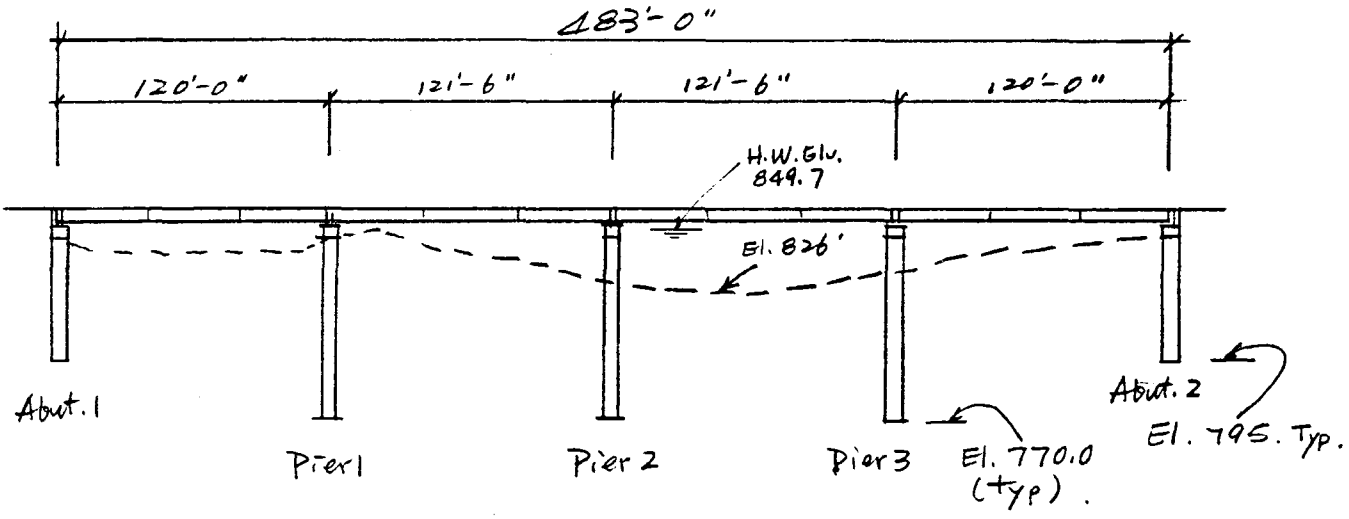

Section at Construction ℄

Four Span Precast Prestressed Concrete Girder Bridge

Skew 15°

Cannon & Associates, Inc.
Consulting Engineers

project no. : 94046-1
project : Old US 80 Bridge
designed by : HM
checked by : TB
date : 5/96 sht. 3 of 24

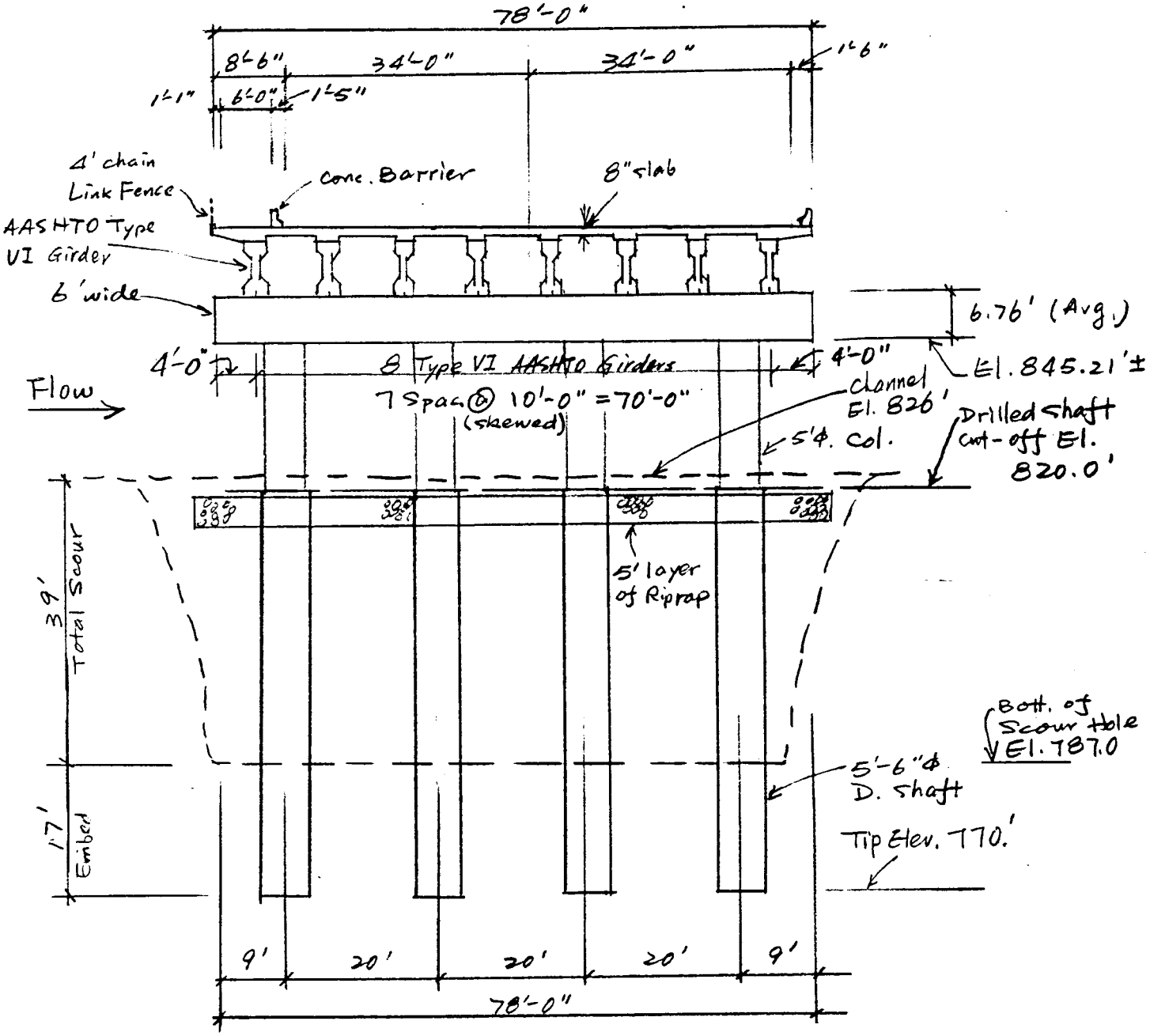

Pier Elevation

Cannon & Associates, Inc.
Consulting Engineers

project no. : 94046-1
project : Old US 80 Highway Bridge
designed by : HM
checked by : TB
date : 5/96 sht. 4 of 24

Pier Analysis (CONT.)

Dead Load Superstructure (Bridge has no wearing surface)

Deck Slab: $(8''/12)(78')(0.15^{k/ft^3})$	$= 7.8^{k/'}$
Barrier $= 2(0.4^{k/'})$	$= 0.8^{k/ft}$
Chain Fence: (include conc. pedestal)	$= 0.1^{k/ft}$
Build-Up: (Use 3" Avg.) $3''/12\,(42''/12)(0.15)(8)$	$= 1.05^{k/ft}$
AASHTO VI Girder: $(1085^{in^2}/144)(0.15^{k/ft})(8)$	$= 9.04^{k/'}$
Intemediate Diaphragm: $[(64''/12)67.67' - 7(\frac{1085}{144})](9''/12)(0.15^{k/ft^3})(2)(\frac{1}{121.5'})$ (Dia.)	$= 0.57^{k/'}$
Misc.	$= 0.14^{k/'}$
	$19.5^{k/'}$

Pier Load:

Dead Load

Max. Supperstructure Reaction $= 19.5^{k/'}(121.5')$	$= 2369.3^{k}$
Pier Cap $= 6'(6.76')(78')(0.15^{k/ft^3})$	$= 474.6^{k}$
Diaphragm @ Pier: $[(6')67.67' - 7(\frac{1085}{144})](3')(0.15)$	$= 159^{k}$
	$\Sigma = 3003^{k}$

Approx. Dead Load Per Shaft: (To scour Line)

$$3003^{k}/4\ \text{shaft} + [\pi \times (\tfrac{5}{2})^2(25.21') + \pi(\tfrac{5.5}{2})^2(820' - 787')](0.15)$$

$$= 750.8^{k} + 191.9^{k}$$

$$= 942.6^{k}/\text{shaft}$$

Live Load

Since no traffic on bridge during flood. No need to check Live Load.

Check Capacity of Shaft: (based on soil capacity)

Service Dead Load $= 942.6^{k}$
Service Live Load $= 0^{k}$ } sht. 7

Ultimate Shaft Capacity $= 1265^{k} > 942.6^{k}$ o.k.

∴ Check Lateral Stability.

Pier Analysis (CONT.)

Check if shaft is flexible or rigid: (soil: sand)

$$n_h = \frac{70^{pci} - 50^{pci}}{17' - 7'}\left(66''/12''\right) = 11 \ \#/in^3$$

slope of "k" per AGRA Chart at sht. 24

$$EI = \frac{0.4\, E_c\, I_g}{1 + 0.0} = 1.16 \times 10^{12}$$

use $\beta_d = 0.0$

$E_c = 3122$ ksi

$I_g = 93.0948$ in^4

$$\eta = \sqrt[5]{\frac{n_h}{EI}} = \sqrt[5]{\frac{11}{1.16 \times 10^{12}}} = 6.24 \times 10^{-3}$$

$$\eta L = \eta(17')(12''/') = 1.27 < 2.0$$

∴ Consider as rigid shaft.

Pier Analysis (cont.)

Project Old US Highway 80 Bridge Job No. E95-36

FIGURE 5

ESTIMATED ULTIMATE DOWNWARD CAPACITY OF STRAIGHT, DRILLED, CAST-IN-PLACE CONCRETE PIERS

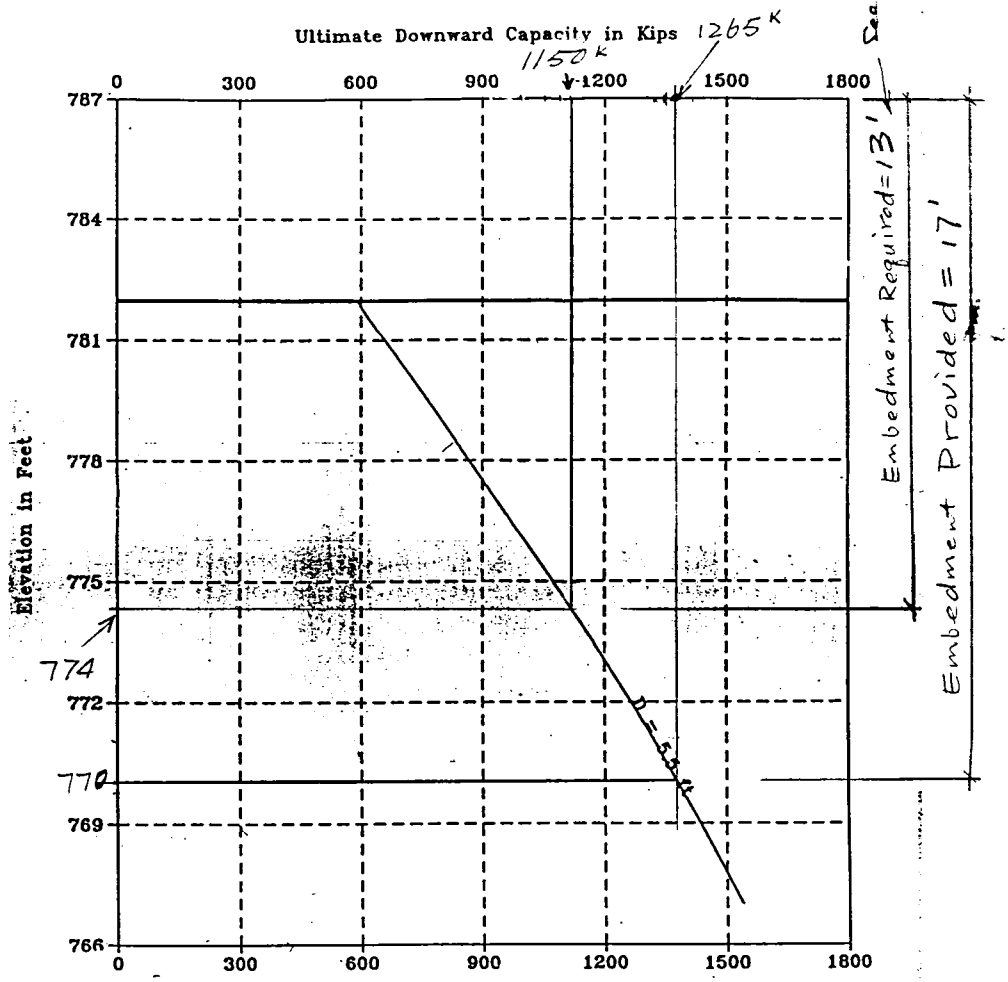

AGRA
Earth & Environmental, Inc.

B-5

Reference: Geotechnical Investigation Report by AGRA Earth & Environmental, Inc., Job No. E95-36, Dated 9/15/96

Cannon & Associates, Inc.
Consulting Engineers

project no.: 94046-1
project: Old US 80 Bridge
designed by: HM
checked by: TB
date: 5/96 sht. 7 of 24

Computer Models

DL per girder

$(2369.3 + 159)/8$ girders $= 316$ k/girder. (see sht. 5.)

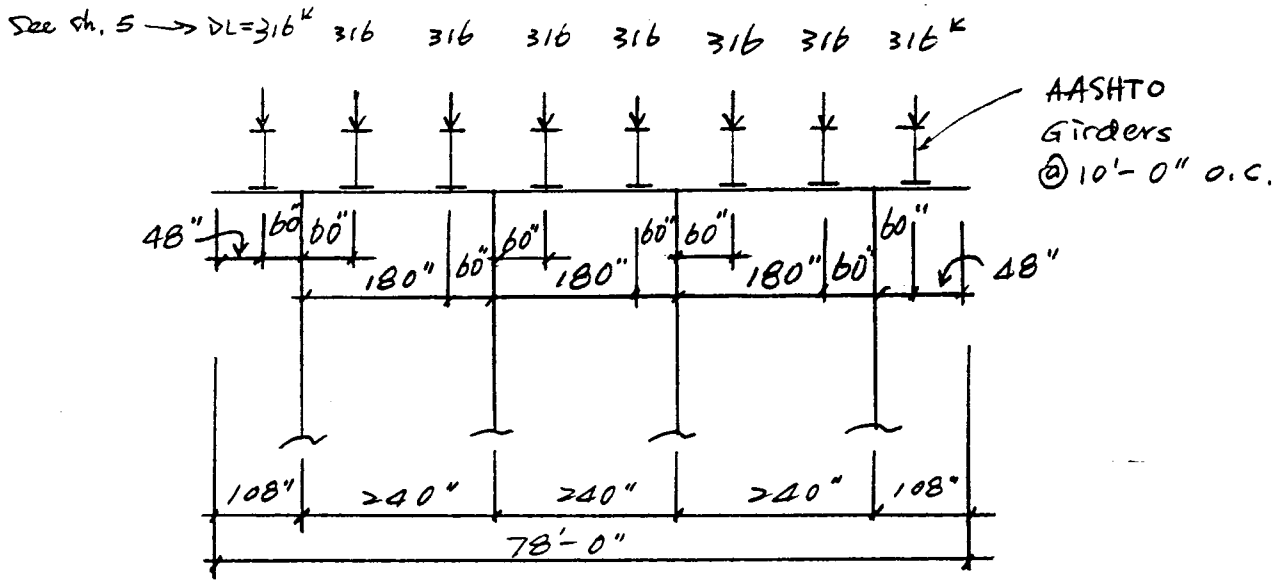

Pier Analysis (cont.)

Lateral Analysis

Stream Flow Forces ($Q_{Low\ Chord}$ Flow Condition)

H.W. Elevation = 849.7
Avg. Velocity = 14.5 ft/sec.
Angle of Attack = 10°. Use 15° min for analysis (Attack ∡ + 5°)
Total Scour ≥ 9'

Stream Force Criteria:

- Clear distance between shafts = 14.5'.
  Assume each shaft carries forces individually. Use shaft diameter with 2' of debris at each side of projected area.
- Assume total stream force on pier cap is equally distributed to each shaft.
- Use K = 1.4 for shafts with debris.
- Use K = 0.7 for round shafts without debris.
- Assume debris extends 12' below H.W. Elevation.

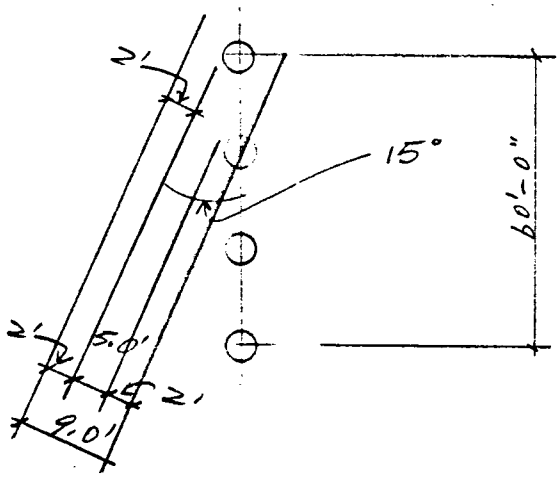

Projected Width: (@ shafts)
5' + 2(2') = 9'

Projected Width: (@ cap)
78'(sin 15°) + 2(2')
= 24.2'

Pier Analysis (CONT.)

Stream Flow (CONT.)

$$P_{max.} = 2\,P_{avg.} = 2(1.4)(14.5\ ft/sec.)^2/1000 = 0.589\ ^{k}/ft^2$$

$$\Delta P = 0.589/(849.7 - 826') = 0.025\ ^{ksf}/'$$

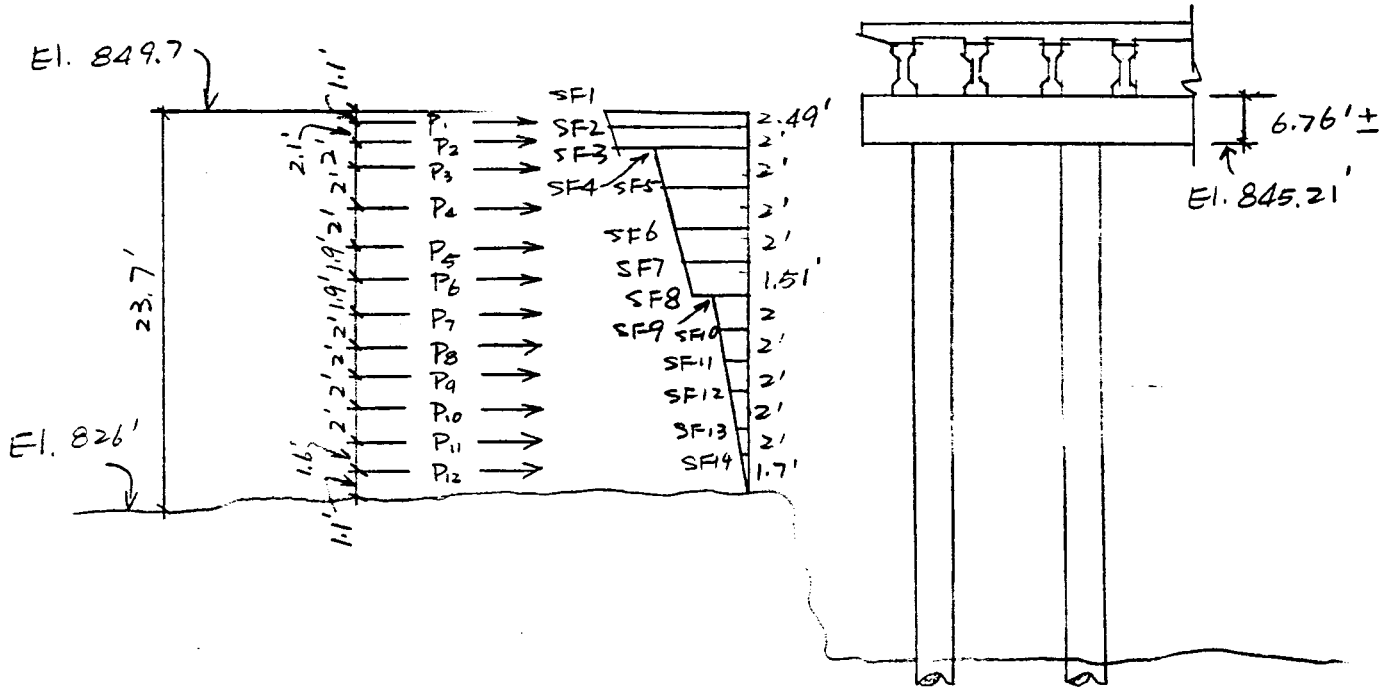

$SF_1 = 0.589^{ksf}(24.2) = 14.25\ ^{k}/'$

$SF_2 = [0.589 - 2.49'(0.025)](24.2) = 12.75$

$SF_3 = [0.589 - 4.49(0.025)](24.2) = 11.54$

$SF_4 = [0.589 - 4.49(0.025)](9) = 4.29$

$SF_5 = [0.589 - 6.49'(0.025)](9) = 3.84$

$SF_6 = [0.589 - 8.49'(0.025)](9) = 3.39$

$SF_7 = [0.589 - 10.49'(0.025)](9) = 2.94$

$SF_8 = [0.589 - 12'(0.025)](9) = 2.60$

$SF_9 = [0.589 - 12'(0.025)](0.7/1.4)(5) = 0.72$

Pier Analysis (CONT.)

Stream Flow (CONT.)

$SF_{10} = [0.589 - 14'(0.025)](0.7/1.4)(5.0) = 0.60$ k/1

$SF_{11} = [0.589 - 16'(0.025)](0.7/1.4)(5.0) = 0.47$

$SF_{12} = [0.589 - 18'(0.025)](0.7/1.4)(5.0) = 0.35$

$SF_{13} = [0.589 - 20'(0.025)](0.7/1.4)(5.0) = 0.22$

$SF_{14} = [0.589 - 22'(0.025)](0.7/1.4)(5.0) = 0.10$

Equivalent Concentrated Loads from Stream Force on Pier:

$P_1 = (14.25 + 12.75)(\frac{1}{2})(2.49')(1/4) = 8.4$ k/shaft

$P_2 = (12.75 + 11.54)(\frac{1}{2})(2')(1/4) = 6.07$

$P_3 = (4.29 + 3.84)(1/2)(2') = 8.13$

$P_4 = (3.84 + 3.39)(\frac{1}{2})(2') = 7.23$

$P_5 = (3.39 + 2.94)(\frac{1}{2})(2') = 6.33$

$P_6 = (2.94 + 2.60)(\frac{1}{2})(1.51) = 4.2$

$P_7 = (0.72 + 0.6)(\frac{1}{2})(2') = 1.32$

$P_8 = (0.6 + 0.47)(\frac{1}{2})(2') = 1.07$

$P_9 = (0.47 + 0.35)(\frac{1}{2})(2') = 0.82$

$P_{10} = (0.35 + 0.22)(\frac{1}{2})(2') = 0.57$

$P_{11} = (0.22 + 0.10)(\frac{1}{2})(2') = 0.32$

$P_{12} = (0.10 + 0)(\frac{1}{2})(1.7') = 0.09$

44.55^k

Resolve total forces into Longitudinal and transverse directions and divide equally between each column:

Transverse Direction: $\cos 15° = 0.966$

Longitudinal Direction: $\sin 15° = 0.259$

Pier Analysis (CONT.)

Stream Flow, (CONT.)

$P_{1T} = 8.4\ (0.966)$	$= 8.11^k$	$P_{1L} = 2.17^k$
$P_{2T} = 6.07\ (0.966)$	$= 5.86$	$P_{2L} = 1.57$
$P_{3T} = 8.13\ (0.966)$	$= 7.85$	$P_{3L} = 2.10$
$P_{4T} = 7.23\ (0.966)$	$= 6.98$	$P_{4L} = 1.87$
$P_{5T} = 6.33\ (0.966)$	$= 6.11$	$P_{5L} = 1.64$
$P_{6T} = 4.2\ 0.966)$	$= 4.06$	$P_{6L} = 1.09$
$P_{7T} = 1.32\ (0.966)$	$= 1.28$	$P_{7L} = 0.34$
$P_{8T} = 1.07\ (0.966)$	$= 1.03$	$P_{8L} = 0.28$
$P_{9T} = 0.82\ (0.966)$	$= 0.79$	$P_{9L} = 0.21$
$P_{10T} = 0.57\ (0.966)$	$= 0.55$	$P_{10L} = 0.15$
$P_{11T} = 0.32\ (0.966)$	$= 0.31$	$P_{11L} = 0.08$
$P_{12T} = 0.09\ (0.966)$	$= 0.09$	$P_{12L} = 0.02$

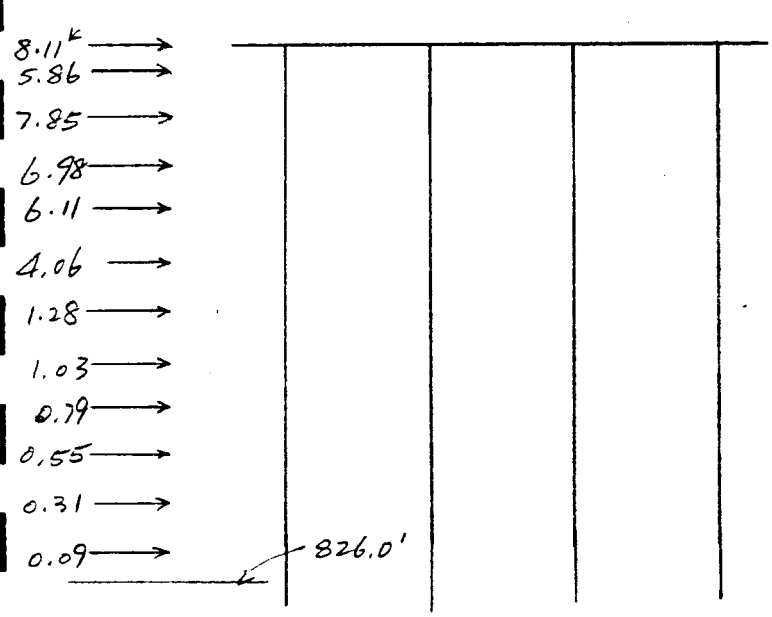

Transvers Model
(Loads Per Shaft)

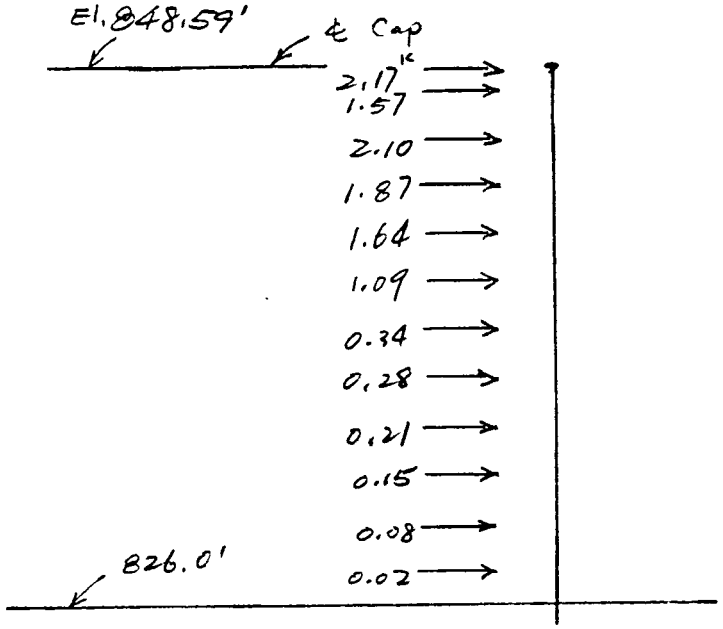

Longitudinal Model
(Loads per shaft)

See Computer Analysis for Models of Pier Frames and analysis of Stream Forces.

Pier Analysis (CONT.)

Results from Transverse Frame Analysis

Top of Column: (Mem. 45) 5'φ

$P_{DL} = 783.65^{k}$, $P_{LL} = 0$, $P_{SF} = 154.31^{k}$

$M_{DL} = 32.89^{'-k}$ $M_{LL} = 0$, $M_{SF} = -2170.48^{'-k}$

(Mem. 32): $P_{DL} = 746.99^{k}$, $P_{LL} = 0$, $P_{SF} = -17.50^{k}$

$M_{DL} = 1.8^{'-k}$, $M_{LL} = 0$, $M_{SF} = 2283.86^{'-k}$

Bott. of Column: (Mem. 48)

$P_{DL} = 844.2^{k}$ $P_{LL} = 0$, $P_{SF} = 154.31^{k}$

$M_{DL} = 21.77^{'-k}$ $M_{LL} = 0$, $M_{SF} = -1454.7^{'-k}$

Bott. of shafts: (Mem 53) 5'-6" φ
(Pt. of Max. Moment)

$P_{DL} = 995.58^{'-k}$, $P_{LL} = 0$, $P_{SF} = 154.31^{k}$

$M_{DL} = 0.15^{'-k}$, $M_{LL} = 0$, $M_{SF} = 338.1^{'-k}$

Mem. 40: $P_{DL} = 958.92^{k}$, $P_{LL} = 0$, $P_{SF} = -17.5^{k}$

$M_{DL} = -0.01^{k}$ $M_{LL} = 0$, $M_{SF} = 337.54^{'-k}$

Top of Shaft: (Mem. 49)

$P_{DL} = 911.83^{k}$, $P_{LL} = 0$, $P_{SF} = 154.31^{k}$

$M_{DL} = -18.82^{'-k}$, $M_{LL} = 0$, $M_{SF} = 1201.67^{'-k}$

Results from Longitudinal Frame Analysis

Top of Column: (Mem. 1)

$P_{SF} = 0$, $M_{SF} = 0$.

Top of Shaft: (Mem. 5)

$P_{SF} = 0$, $M_{SF} = 266^{'-k}$

Bott. of shaft: (Mem. 7, Point of Max. Moment)

$P_{SF} = 0$, $M_{SF} = 669.2^{'-k}$

Pier Analysis (CONT.)

Check Shaft Capacity Based on Strength of Soil

$P_{TL} = 995.58 + 154.31 = 1150^K$, (Mem. 53 control)
Shaft Tip Elev. = 770'
Ultimate Capacity of Soil = 1265^K > 1150^K O.K.
(w/ Safty factor = 1.0) (Sht. 7, AGRA Chart)

Embedment Depth Provided = 787.0' − 770.0' = 17'
Embedment Depth Required = 787.0 − 774 = 13'
} See Sht. 7 AGRA Chart.

Check Capacity Based on Strength of Column & Shaft

(Use AASHTO Group VII Loading + Live Load + Impact) (No Earthquake)

$1.3[\cancel{\beta_D}^{1.0} D + \cancel{\beta_{L+I}}^{1.0}(L+I) + \cancel{\beta_E E}^{0} + 1.0\cancel{B}^{0} + 1.0\,SF]$

Note: No Live Load on Bridge.

∴ Top of Column:

Mem. 45: $P_u = 1.3[1.0(783.65) + 1.0(154.31)] = 1219^K$
$M_{u.tr.} = 1.3[1.0(32.89) + 1.0(-2170.48)] = 2779'^{-K}$
$M_{u.long} = 0$

Mem. 32: $P_u = 1.3[1.0(746.99) + 1.0(-17.5)] = 948^K$
$M_{u.tr.} = 1.3[1.0(1.8) + 1.0(2283.86)] = 2971'^{-K}$
$M_{u.long} = 0$

Bott. of Column:

Mem. 48: $P_u = 1.3[1.0(844.2) + 1.0(154.31)] = 1298^K$
$M_{u.tr.} = 1.3[1.0(21.77) + 1.0(-1454.7)] = 1863'^{-K}$
$M_{u.long} = 1.3(266) = 345.8'^{-K}$

Pier Analysis (CONT.)

Bott. of shaft: (Point of Max. Moment)

Mem. 53: $P_u = 1.3[1.0(995.58 + 1.0(154.31))] = 1495^{K}$

$M_{u.tr} = 1.3[1.0(0.1.5) + 1.0(338.1)] = 440^{'-K}$

$M_{u.long} = 1.3[669.2] = 870^{'-K}$

Mem. 40: $P_u = 1.3[958.92 + (-17.5)] = 1224^{K}$

$M_{u.tr.} = 1.3[-0.01 + 337.54] = 439^{'-K}$

$M_{u.long} = 1.3[669.2] = 870^{'-K}$

Top of Shaft:

Mem. 49: $P_u = 1.3[1.0(911.83 + 1.0(154.31))] = 1386^{K}$

$M_{u.tr.} = 1.3[-18.82 + 1201.67] = 1538^{'-K}$

$M_{u.long} = 1.3[(266)] = 345.8^{'-K}$

Pier Analysis (cont.)

Column Slenderness

Transverse Direction: $K = 1.2$, $l \approx 58.21'$; $r_{col.} = 0.25(5')(12''/') = 15''$

$$Kl/r = 55.88 > 22$$

∴ Moment must be magnified.

Longitudinal Direction: $K = 2.1$, $\frac{Kl}{r} = \frac{2.1(58.21)(12)}{15} = 98 < 100$

$$\delta_s = \frac{1}{1 - \frac{\Sigma P_u}{\phi \Sigma P_c}} \quad , \quad P_c = \frac{\pi^2 EI}{(K l_u)^2}$$

$$P_{c,\,col.,\,tr.} = \frac{\pi^2 (3122)(\overset{0.4 I_g}{254340})}{(1.2 \times 58.21' \times 12''/')^2} = 11154^k$$

$$P_{c,\,col.,\,long.} = \frac{\pi^2 (3122)(254340)}{(2.1 \times 58.21 \times 12''/')^2} = 3642^k$$

Mem. 45: $\delta_{s\,tr.} = \frac{1}{1 - \frac{1219}{0.7(11154)}} = 1.19$ $\quad \delta_{s.long} = \frac{1}{1 - \frac{1219}{0.7(3642)}} = 1.92$

Mem. 32: $\delta_{s.tr.} = \frac{1}{1 - \frac{948}{0.7(11154)}} = 1.14$ $\quad \delta_{s.long} = \frac{1}{1 - \frac{948}{0.7(3642)}} = 1.59$

Mem. 48: $\delta_{s\,tr.} = \frac{1}{1 - \frac{1298}{0.7(11154)}} = 1.20$ $\quad \delta_{s.long} = \frac{1}{1 - \frac{1298}{0.7(3642)}} = 2.04$

$$P_{c,\,shaft.,\,tr.} = \frac{\pi^2 (3122)(372379)}{(1.2 \times 58.21 \times 12)^2} = 16330^k$$

$$P_{c,\,shaft.,\,long.} = \frac{\pi^2 (3122)(\overset{0.4 I_g}{372379})}{(2.1 \times 58.21 \times 12)^2} = 5332^k$$

Mem. 53: $\delta_{s.tr.} = \frac{1}{1 - \frac{1495}{0.7(16330)}} = 1.15$ $\quad \delta_{s.long.} = \frac{1}{1 - \frac{1495}{0.7(5332)}} = 1.67$

Mem. 40: $\delta_{s.tr.} = \frac{1}{1 - \frac{1224}{0.7(16330)}} = 1.12$ $\quad \delta_{s.long} = \frac{1}{1 - \frac{1224}{0.7(5332)}} = 1.49$

Mem. 49: $\delta_{s.tr.} = \frac{1}{1 - \frac{1386}{0.7(16330)}} = 1.14$ $\quad \delta_{s.long.} = \frac{1}{1 - \frac{1386}{0.7(5332)}} = 1.59$

Pier Analysis (CONT.)

Max. Col. Loads $f'_c = 3000$ psi, $f_y = 60$ ksi

Mem. 45: $P_u = 1219^k$

$M_{u.tr.} = 1.19(2779) = 3307^{'-k}$

$M_{u.long} = 0$

Mem. 32: $P_u = 948^k$

$M_{u.tr.} = 1.14(2971) = 3387^{'-k}$

$M_{u.long} = 0$

Mem. 48: $P_u = 1298^k$

$M_{u.tr.} = 1.2(1863) = 2236^{'-k}$

$M_{u.long} = 2.04(345.8) = 705^{'-k}$

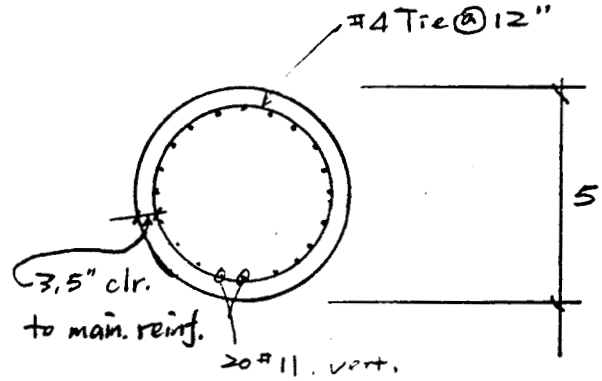

ULTIMATE STRENGTH DESIGN
OF
REINFORCED CONCRETE COLUMNS

```
CODER    :  HONG MEI
CHECKER  :
DATE     :   7- 3-96
JOB IDENTIFICATION :  OLD US 80 BRIDGE,PIER COL.
DATA USED
**** ****
ANALYSIS OF ROUND COLUMN - SIZE : DIAMETER =  60.00 IN.
STRESSES : FC'      = 3.000 K.S.I.  FC = 2.550 K.S.I.  FY      = 60.000 K.S.I
           E-CONC. = 3122. K.S.I.                      E-STEEL = 29000. K.S.I
           MAX. CONC. STRAIN (EU) =  .003
CAPACITY REDUCTION FACTORS :
COMPRESSION =  .70     FLEXURE =  .90
REINFORCEMENT DATA :          CIRCULAR REINFORCEMENT PATTERN

WITH- 20 NO. 11 BARS   AST= 31.20 SQ.IN. = 1.11PCT.   COVER= 3.50 IN.
BAR SPACING =  8.10 IN.
OUTPUT
******
```

LOAD CASE	APPLIED LOADS AP	AMX	AMY	COMPUTED STRENGTH UP	UMX	UMY	UP/AP
1	1219.	3307.	0.	1422.	3863.	0.	1.168
2	948.	3387.	0.	1005.	3601.	0.	1.063
3	1298.	2236.	705.	2228.	3842.	1211.	1.718

$\left.\right\} > 1.0$ O.K.

Pier Analysis (cont.)

Max. Shaft Loads $f'_c = 3000$ psi, $f_y = 60$ ksi

Mem. 53: $P_u = 1495^k$

$M_{u.tr.} = 1.15(440) = 506'^{-k}$

$M_{u.long} = 1.67(870) = 1453'^{-k}$

Mem. 40: $P_u = 1224^k$

$M_{u.tr.} = 1.12(439) = 492'^{-k}$

$M_{u.long} = 1.49(870) = 1296'^{-k}$

Mem. 49: $P_u = 1386^k$

$M_{u.tr.} = 1.14(1538) = 1753'^{-k}$

$M_{u.long} = 1.59(345.8) = 550'^{-k}$

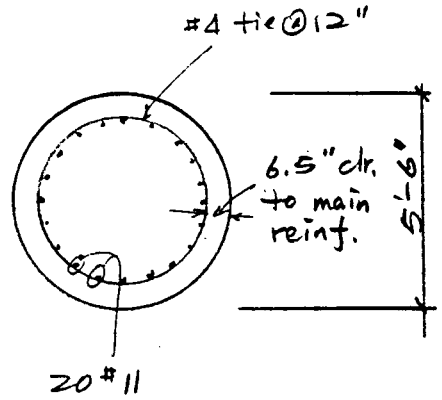

ULTIMATE STRENGTH DESIGN
OF
REINFORCED CONCRETE COLUMNS

```
CODER    :  HONG MEI
CHECKER  :
DATE     :   7- 3-96
JOB IDENTIFICATION :  OLD US 80 BRIDGE,PIER SHAFT
DATA USED
**** ****
ANALYSIS OF ROUND COLUMN - SIZE : DIAMETER =  66.00 IN.
STRESSES : FC'      = 3.000 K.S.I.  FC = 2.550 K.S.I.  FY      = 60.000 K.S.I
           E-CONC. = 3122. K.S.I.                      E-STEEL = 29000. K.S.I
           MAX. CONC. STRAIN (EU) =  .003
CAPACITY REDUCTION FACTORS :
COMPRESSION =  .70     FLEXURE =  .90
REINFORCEMENT DATA :          CIRCULAR REINFORCEMENT PATTERN

WITH- 20 NO. 11 BARS   AST= 31.20 SQ.IN. =   .92PCT.   COVER= 6.50 IN.
BAR SPACING =  8.10 IN.
OUTPUT
******
```

LOAD CASE	APPLIED LOADS AP	AMX	AMY	COMPUTED STRENGTH UP	UMX	UMY	UP/AP
1	1495.	506.	1453.	4129.	1401.	4024.	2.766
2	1224.	492.	1296.	3879.	1563.	4117.	3.173
3	1386.	1753.	550.	3459.	4379.	1374.	2.497

$\left.\right\} > 1.0$ O.K

Pier Analysis (CONT.)

Summary of Results

The results of the elastic analyses using SAP90 indicate that the piers are stable for flows up to the $Q_{Low\ chord}$ flow rate.

Since the shafts were surmised to behave rigidly, a check of the validity of the spring supported computer model using the program COM624 was warranted. COM624, which accounts for non-linearity of soil-structure interaction (p-y curves), indicates that the piers are unstable due to inadequate embedment.

Due to the highly indeterminate nature of the stability analysis, it is recommended that the bridge be designated scour critical.

COMPUTER ANALYSIS

Computer Models

Tranverse Pier Frame Model

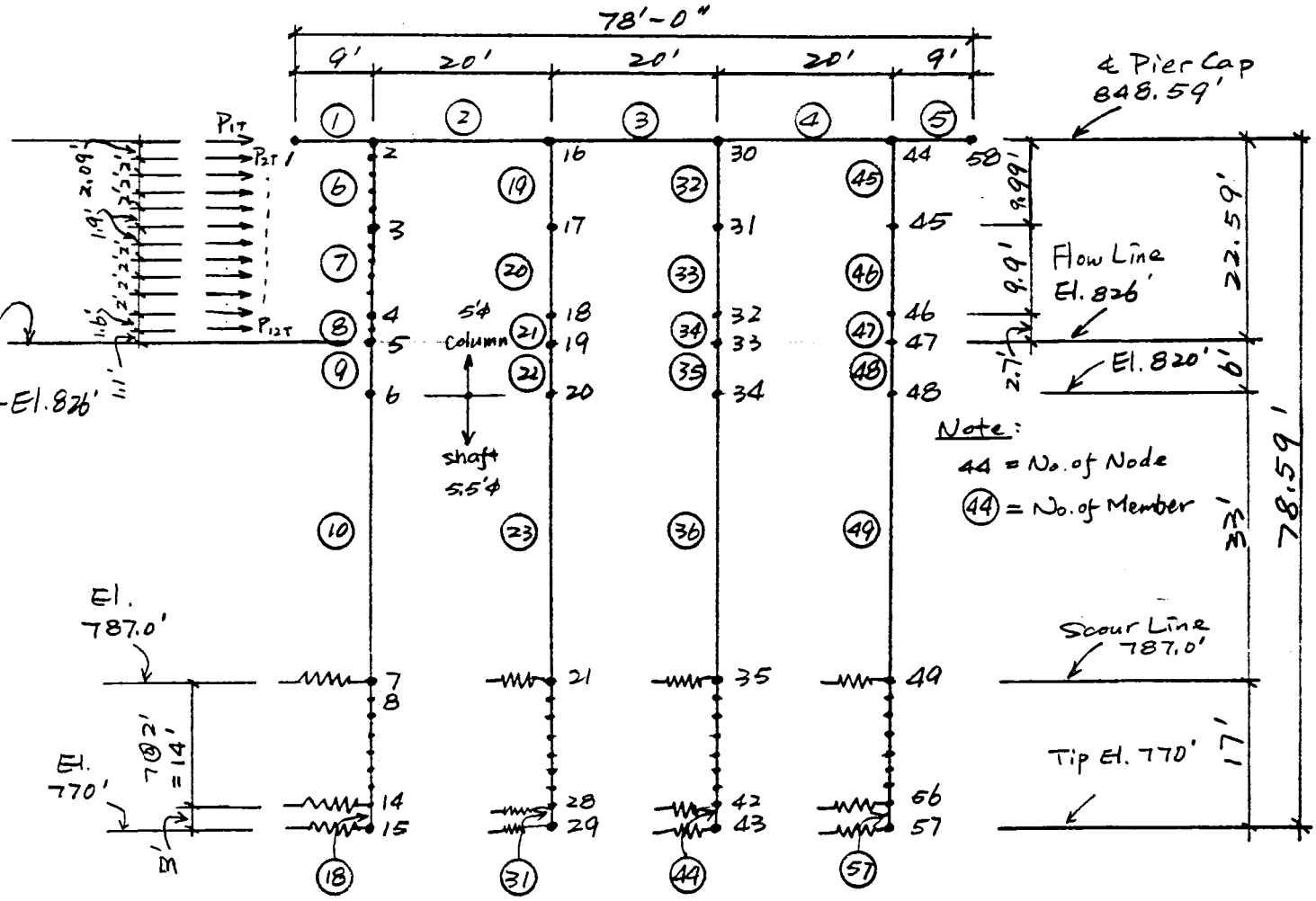

$w_{cap} = 0.507$ k/ft.

$I_{cap} = \frac{1}{12}(72)(81.12)^3 = 3202839\ in^4$, $A_{cap} = (72)(81.12) = 5841\ in^2$, $E_{cap} = 3122$ ksi

$I_{col.} = 1.0 I_g = 1.0\left[\frac{1}{64}(60)^4\pi\right] = 636172\ in^4$, $A_{col.} = 2826\ in^2$, $E_{col.} = 3122$ ksi

$I_{shaft} = 1.0 I_g = 1.0\left[\frac{1}{64}(66)^4\pi\right] = 931419\ in^4$, $A_{shaft} = 3419\ in^2$, $E_{shaft} = 3122$ ksi

$f'_c = 3000$ psi.

Note: Use I_g for Colu. & shaft's I_g for analysis.

Computer Models

Longitudinal Pier Frame Model (cantilever)

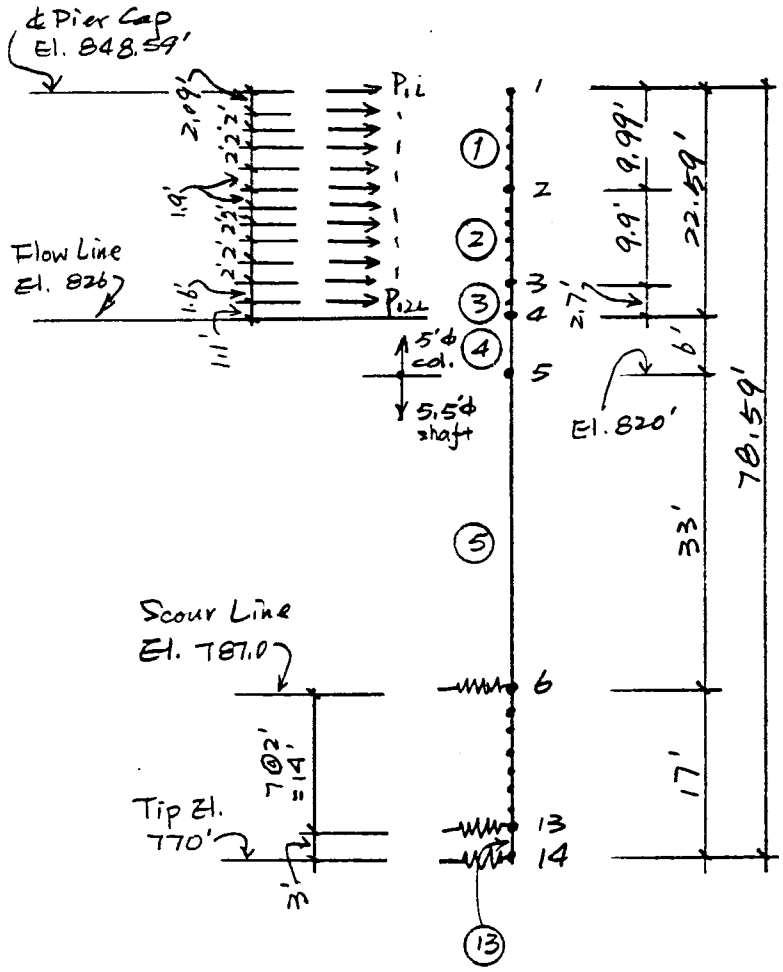

Computer Models

Spring Constants

Based on lateral subgrade modulus (K) provided by AGRA charts (sht. 8)

Spring Constant = K (shaft ϕ)(Node spacing)

= K (66")(24")

1" Deflection Curve

Depth below Scour Line (ft)	Subgrade Modulus (pci)	Spring Constants K/"
0	0	0
2	18	28.5
4	32	50.9
6	41	64.9
8	56	88.7
10	61	96.6
12	64	101.4
14	68	134.6
17	71	84.3.

Pier Analysis (CONT.)

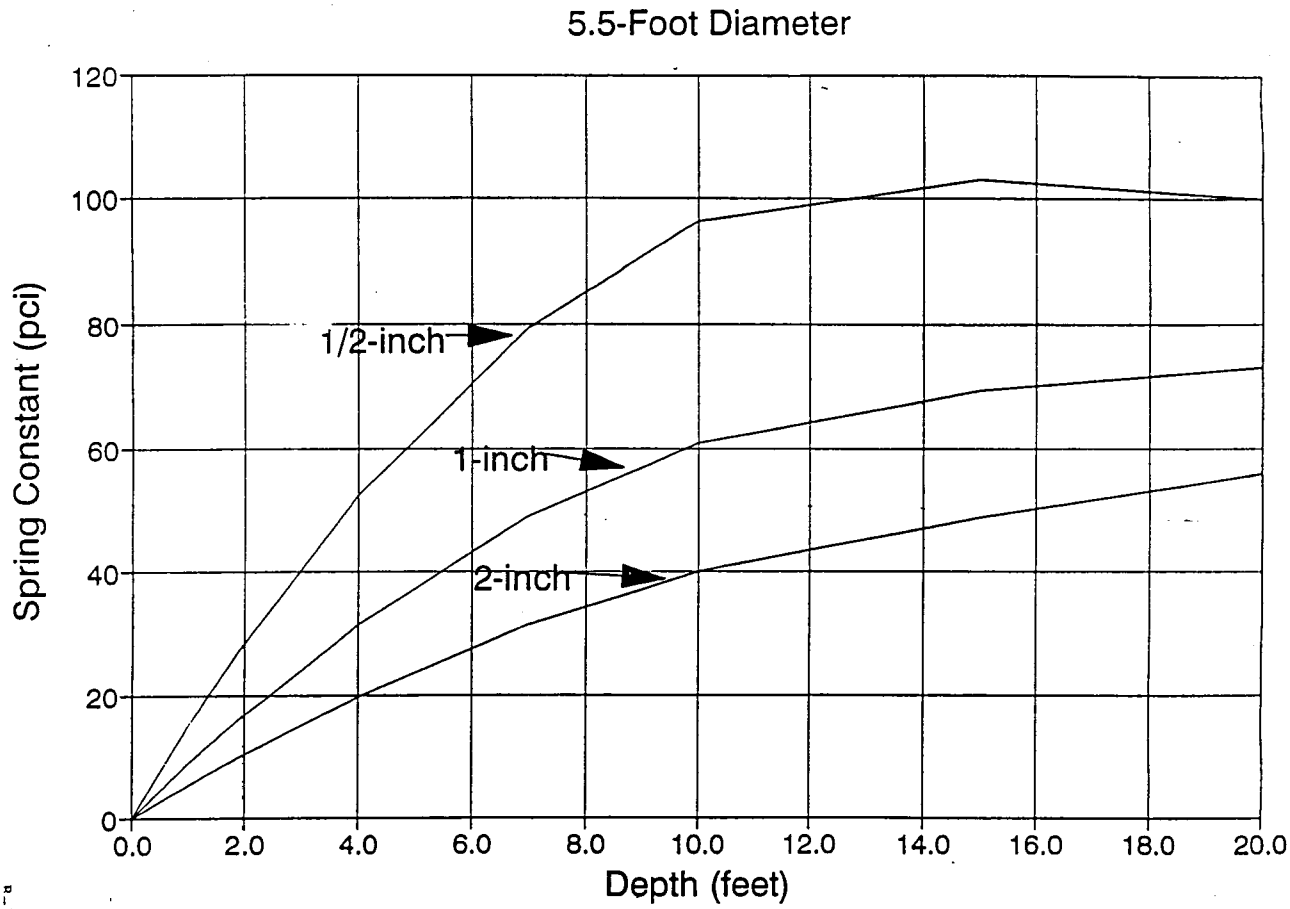

Reference: Geotechnical Investigation Report by AGRA Earth & Environmental, Inc., Job No. E95-36, dated 4/15/96.

OLD US 80 BRIDGE @ HASSAYAMPA RIVER, TRANS. FRAME, Q Low Chord FLOW

F R A M E E L E M E N T F O R C E S

ELT ID	LOAD COND	AXIAL FORCE	DIST ENDI	1-2 PLANE SHEAR	1-2 PLANE MOMENT	1-3 PLANE SHEAR	1-3 PLANE MOMENT	AXIAL TORQ
1								
	1	.00						
			.0	.00	.00			
			48.0	-24.34	-584.06			
			108.0	-370.76	-21916.82			
	2	.00						
	3	.00						
			.0	.00	.00			
			108.0	.00	.00			
2								
	1	.49						
			.0	398.21	-21522.09			
			60.0	367.79	1457.95			
			162.2	.00	4103.19			
			180.0	-9.05	4022.44			
			240.0	-355.47	-16393.09			
	2	.00						
	3	-.85						
			.0	-154.31	26045.81			
			240.0	-154.31	-10988.98			
3								
	1	.47						
			.0	376.84	-16414.74			
			60.0	346.42	5283.06			
			120.0	.00	6195.66			
			180.0	-30.42	5283.08			
			240.0	-376.84	-16414.70			
	2	.00						
	3	.00						
			.0	-136.81	16417.33			
			240.0	-136.81	-16417.33			
4								
	1	.49						
			.0	355.47	-16393.13			
			60.0	325.05	4022.43			
			77.8	.00	4103.19			
			180.0	-51.79	1457.96			
			240.0	-398.21	-21522.08			
	2	.00						
	3	.85						
			.0	-154.31	10988.98			
			240.0	-154.31	-26045.81			
5								
	1	.00						
			.0	370.76	-21916.82			
			60.0	340.34	-584.06			
			108.0	.00	.00			
	2	.00						
	3	.00						
			.0	.00	.00			
			108.0	.00	.00			

OLD US 80 BRIDGE @ HASSAYAMPA RIVER, TRANS. FRAME, Q Low Chord FLOW

F R A M E E L E M E N T F O R C E S

ELT ID	LOAD COND	AXIAL FORCE	DIST ENDI	1-2 PLANE SHEAR	1-2 PLANE MOMENT	1-3 PLANE SHEAR	1-3 PLANE MOMENT	AXIAL TORQ
6								
	1	-783.65						
			.0	.49	-394.73			
			119.9	.49	-335.71			
	2	.00						
	3	154.31						
			.0	7.26	-26045.81			
			25.1	7.26	-25863.69			
			49.1	13.12	-25548.77			
			73.1	20.97	-25045.45			
			97.1	27.95	-24374.62			
			119.9	34.06	-23598.02			
19								
	1	-746.99						
			.0	-.03	21.61			
			119.9	-.03	18.38			
	2	.00						
	3	-17.50						
			.0	8.96	-27406.31			
			25.1	8.96	-27181.63			
			49.1	14.82	-26825.99			
			73.1	22.67	-26281.95			
			97.1	29.65	-25570.38			
			119.9	35.76	-24755.09			
32								
	1	-746.99						
			.0	.03	-21.61			
			119.9	.03	-18.38			
	2	.00						
	3	17.50						
			.0	8.96	-27406.31			
			25.1	8.96	-27181.63			
			49.1	14.82	-26825.99			
			73.1	22.67	-26281.95			
			97.1	29.65	-25570.38			
			119.9	35.76	-24755.09			
45								
	1	-783.65						
			.0	-.49	394.73			
			119.9	-.49	335.71			
	2	.00						
	3	-154.31						
			.0	7.26	-26045.81			
			25.1	7.26	-25863.69			
			49.1	13.12	-25548.77			
			73.1	20.97	-25045.45			
			97.1	27.95	-24374.62			
			119.9	34.06	-23598.02			
7								
	1	-812.89						
			.0	.49	-335.71			
			118.8	.49	-277.22			

OLD US 80 BRIDGE @ HASSAYAMPA RIVER, TRANS. FRAME, Q Low Chord FLOW

F R A M E E L E M E N T F O R C E S

ELT ID	LOAD COND	AXIAL FORCE	DIST ENDI	1-2 PLANE SHEAR	1-2 PLANE MOMENT	1-3 PLANE SHEAR	1-3 PLANE MOMENT	AXIAL TORQ
	2	.00						
	3	154.31						
			.0	38.12	-23598.02			
			22.8	38.12	-22728.84			
			46.8	39.40	-21783.21			
			70.8	40.43	-20812.85			
			94.8	41.22	-19823.54			
			118.8	41.77	-18821.02			
20	----------							
	1	-776.23						
			.0	-.03	18.38			
			118.8	-.03	15.18			
	2	.00						
	3	-17.50						
			.0	39.82	-24755.09			
			22.8	39.82	-23847.23			
			46.8	41.10	-22860.86			
			70.8	42.13	-21849.78			
			94.8	42.92	-20819.74			
			118.8	43.47	-19776.49			
33	----------							
	1	-776.23						
			.0	.03	-18.38			
			118.8	.03	-15.18			
	2	.00						
	3	17.50						
			.0	39.82	-24755.09			
			22.8	39.82	-23847.23			
			46.8	41.10	-22860.86			
			70.8	42.13	-21849.78			
			94.8	42.92	-20819.74			
			118.8	43.47	-19776.49			
46	----------							
	1	-812.89						
			.0	-.49	335.71			
			118.8	-.49	277.22			
	2	.00						
	3	-154.31						
			.0	38.12	-23598.02			
			22.8	38.12	-22728.84			
			46.8	39.40	-21783.21			
			70.8	40.43	-20812.85			
			94.8	41.22	-19823.54			
			118.8	41.77	-18821.02			
8	----------							
	1	-831.41						
			.0	.49	-277.22			
			32.4	.49	-261.27			
	2	.00						
	3	154.31						
			.0	42.08	-18821.02			
			19.2	42.08	-18013.05			

OLD US 80 BRIDGE @ HASSAYAMPA RIVER, TRANS. FRAME, Q Low Chord FLOW

F R A M E E L E M E N T F O R C E S

ELT ID	LOAD COND	AXIAL FORCE	DIST ENDI	1-2 PLANE SHEAR	1-2 PLANE MOMENT	1-3 PLANE SHEAR	1-3 PLANE MOMENT	AXIAL TORQ
			32.4	42.17	-17456.39			
21								
	1	-794.75						
			.0	-.03	15.18			
			32.4	-.03	14.30			
	2	.00						
	3	-17.50						
			.0	43.78	-19776.49			
			19.2	43.78	-18935.95			
			32.4	43.87	-18356.88			
34								
	1	-794.75						
			.0	.03	-15.18			
			32.4	.03	-14.30			
	2	.00						
	3	17.50						
			.0	43.78	-19776.49			
			19.2	43.78	-18935.95			
			32.4	43.87	-18356.88			
47								
	1	-831.41						
			.0	-.49	277.22			
			32.4	-.49	261.27			
	2	.00						
	3	-154.31						
			.0	42.08	-18821.02			
			19.2	42.08	-18013.05			
			32.4	42.17	-17456.39			
9								
	1	-844.20						
			.0	.49	-261.27			
			72.0	.49	-225.82			
	2	.00						
	3	154.31						
			.0	42.17	-17456.39			
			72.0	42.17	-14420.04			
22								
	1	-807.54						
			.0	-.03	14.30			
			72.0	-.03	12.36			
	2	.00						
	3	-17.50						
			.0	43.87	-18356.88			
			72.0	43.87	-15198.35			
35								
	1	-807.54						
			.0	.03	-14.30			
			72.0	.03	-12.36			
	2	.00						
	3	17.50						
			.0	43.87	-18356.88			
			72.0	43.87	-15198.35			

OLD US 80 BRIDGE @ HASSAYAMPA RIVER, TRANS. FRAME, Q Low Chord FLOW

F R A M E E L E M E N T F O R C E S

ELT ID	LOAD COND	AXIAL FORCE	DIST ENDI	1-2 PLANE SHEAR	1-2 PLANE MOMENT	1-3 PLANE SHEAR	1-3 PLANE MOMENT	AXIAL TORQ
48								
	1	-844.20						
			.0	-.49	261.27			
			72.0	-.49	225.82			
	2	.00						
	3	-154.31						
			.0	42.17	-17456.39			
			72.0	42.17	-14420.04			
10								
	1	-911.83						
			.0	.49	-225.82			
			396.0	.49	-30.85			
	2	.00						
	3	154.31						
			.0	42.17	-14420.04			
			396.0	42.17	2279.88			
23								
	1	-875.17						
			.0	-.03	12.36			
			396.0	-.03	1.68			
	2	.00						
	3	-17.50						
			.0	43.87	-15198.35			
			396.0	43.87	2173.57			
36								
	1	-875.17						
			.0	.03	-12.36			
			396.0	.03	-1.68			
	2	.00						
	3	17.50						
			.0	43.87	-15198.35			
			396.0	43.87	2173.57			
49								
	1	-911.83						
			.0	-.49	225.82			
			396.0	-.49	30.85			
	2	.00						
	3	-154.31						
			.0	42.17	-14420.04			
			396.0	42.17	2279.88			
11								
	1	-974.20						
			.0	.49	-30.85			
			24.0	.49	-19.04			
	2	.00						
	3	154.31						
			.0	42.17	2279.88			
			24.0	42.17	3292.00			
12								
	1	-981.33						
			.0	.42	-19.04			
			24.0	.42	-9.07			

OLD US 80 BRIDGE @ HASSAYAMPA RIVER, TRANS. FRAME, Q Low Chord FLOW

F R A M E E L E M E N T F O R C E S

ELT ID	LOAD COND	AXIAL FORCE	DIST ENDI	1-2 PLANE SHEAR	1-2 PLANE MOMENT	1-3 PLANE SHEAR	1-3 PLANE MOMENT	AXIAL TORQ
	2	.00						
	3	154.31						
			.0	26.80	3292.00			
			24.0	26.80	3935.19			
13								
	1	-988.45						
			.0	.30	-9.07			
			24.0	.30	-1.85			
	2	.00						
	3	154.31						
			.0	5.07	3935.19			
			24.0	5.07	4056.84			
14								
	1	-995.58						
			.0	.18	-1.85			
			24.0	.18	2.57			
	2	.00						
	3	154.31						
			.0	-15.39	4056.84			
			24.0	-15.39	3687.43			
15								
	1	-1002.71						
			.0	.07	2.57			
			24.0	.07	4.14			
	2	.00						
	3	154.31						
			.0	-33.52	3687.43			
			24.0	-33.52	2882.93			
16								
	1	-1009.84						
			.0	-.02	4.14			
			24.0	-.02	3.66			
	2	.00						
	3	154.31						
			.0	-42.62	2882.93			
			24.0	-42.62	1859.99			
17								
	1	-1016.97						
			.0	-.06	3.66			
			24.0	-.06	2.15			
	2	.00						
	3	154.31						
			.0	-41.06	1859.99			
			24.0	-41.06	874.47			
18								
	1	-1025.88						
			.0	-.06	2.15			
			36.0	-.06	.00			
	2	.00						
	3	154.31						
			.0	-24.29	874.47			
			36.0	-24.29	.00			

OLD US 80 BRIDGE @ HASSAYAMPA RIVER, TRANS. FRAME, Q Low Chord FLOW

F R A M E E L E M E N T F O R C E S

ELT ID	LOAD COND	AXIAL FORCE	DIST ENDI	1-2 PLANE SHEAR	1-2 PLANE MOMENT	1-3 PLANE SHEAR	1-3 PLANE MOMENT	AXIAL TORQ
31								
	1	-989.22						
			.0	.00	-.12			
			36.0	.00	.00			
	2	.00						
	3	-17.50						
			.0	-24.50	881.87			
			36.0	-24.50	.00			
44								
	1	-989.22						
			.0	.00	.12			
			36.0	.00	.00			
	2	.00						
	3	17.50						
			.0	-24.50	881.87			
			36.0	-24.50	.00			
57								
	1	-1025.88						
			.0	.06	-2.15			
			36.0	.06	.00			
	2	.00						
	3	-154.31						
			.0	-24.29	874.47			
			36.0	-24.29	.00			
24								
	1	-937.54						
			.0	-.03	1.68			
			24.0	-.03	1.04			
	2	.00						
	3	-17.50						
			.0	43.87	2173.57			
			24.0	43.87	3226.41			
25								
	1	-944.67						
			.0	-.02	1.04			
			24.0	-.02	.49			
	2	.00						
	3	-17.50						
			.0	28.23	3226.41			
			24.0	28.23	3903.95			
26								
	1	-951.80						
			.0	-.02	.49			
			24.0	-.02	.10			
	2	.00						
	3	-17.50						
			.0	6.11	3903.95			
			24.0	6.11	4050.48			
27								
	1	-958.92						
			.0	-.01	.10			
			24.0	-.01	-.14			

OLD US 80 BRIDGE @ HASSAYAMPA RIVER, TRANS. FRAME, Q Low Chord FLOW

F R A M E E L E M E N T F O R C E S

ELT ID	LOAD COND	AXIAL FORCE	DIST ENDI	1-2 PLANE SHEAR	1-2 PLANE MOMENT	1-3 PLANE SHEAR	1-3 PLANE MOMENT	AXIAL TORQ
	2	.00						
	3	-17.50						
			.0	-14.76	4050.48			
			24.0	-14.76	3696.30			
28								
	1	-966.05						
			.0	.00	-.14			
			24.0	.00	-.23			
	2	.00						
	3	-17.50						
			.0	-33.30	3696.30			
			24.0	-33.30	2897.21			
29								
	1	-973.18						
			.0	.00	-.23			
			24.0	.00	-.20			
	2	.00						
	3	-17.50						
			.0	-42.69	2897.21			
			24.0	-42.69	1872.62			
30								
	1	-980.31						
			.0	.00	-.20			
			24.0	.00	-.12			
	2	.00						
	3	-17.50						
			.0	-41.28	1872.62			
			24.0	-41.28	881.87			
37								
	1	-937.54						
			.0	.03	-1.68			
			24.0	.03	-1.04			
	2	.00						
	3	17.50						
			.0	43.87	2173.57			
			24.0	43.87	3226.41			
38								
	1	-944.67						
			.0	.02	-1.04			
			24.0	.02	-.49			
	2	.00						
	3	17.50						
			.0	28.23	3226.41			
			24.0	28.23	3903.95			
39								
	1	-951.80						
			.0	.02	-.49			
			24.0	.02	-.10			
	2	.00						
	3	17.50						
			.0	6.11	3903.95			
			24.0	6.11	4050.48			

OLD US 80 BRIDGE @ HASSAYAMPA RIVER, TRANS. FRAME, Q Low Chord FLOW

F R A M E E L E M E N T F O R C E S

ELT ID	LOAD COND	AXIAL FORCE	DIST ENDI	1-2 PLANE SHEAR	1-2 PLANE MOMENT	1-3 PLANE SHEAR	1-3 PLANE MOMENT	AXIAL TORQ
40								
	1	-958.92						
			.0	.01	-.10			
			24.0	.01	.14			
	2	.00						
	3	17.50						
			.0	-14.76	4050.48			
			24.0	-14.76	3696.30			
41								
	1	-966.05						
			.0	.00	.14			
			24.0	.00	.23			
	2	.00						
	3	17.50						
			.0	-33.30	3696.30			
			24.0	-33.30	2897.21			
42								
	1	-973.18						
			.0	.00	.23			
			24.0	.00	.20			
	2	.00						
	3	17.50						
			.0	-42.69	2897.21			
			24.0	-42.69	1872.62			
43								
	1	-980.31						
			.0	.00	.20			
			24.0	.00	.12			
	2	.00						
	3	17.50						
			.0	-41.28	1872.62			
			24.0	-41.28	881.87			
50								
	1	-974.20						
			.0	-.49	30.85			
			24.0	-.49	19.04			
	2	.00						
	3	-154.31						
			.0	42.17	2279.88			
			24.0	42.17	3292.00			
51								
	1	-981.33						
			.0	-.42	19.04			
			24.0	-.42	9.07			
	2	.00						
	3	-154.31						
			.0	26.80	3292.00			
			24.0	26.80	3935.19			
52								
	1	-988.45						
			.0	-.30	9.07			
			24.0	-.30	1.85			

OLD US 80 BRIDGE @ HASSAYAMPA RIVER, TRANS. FRAME, Q Low Chord FLOW

F R A M E E L E M E N T F O R C E S

ELT ID	LOAD COND	AXIAL FORCE	DIST ENDI	1-2 PLANE SHEAR	1-2 PLANE MOMENT	1-3 PLANE SHEAR	1-3 PLANE MOMENT	AXIAL TORQ
	2	.00						
	3	-154.31						
			.0	5.07	3935.19			
			24.0	5.07	4056.84			
53								
	1	-995.58						
			.0	-.18	1.85			
			24.0	-.18	-2.57			
	2	.00						
	3	-154.31						
			.0	-15.39	4056.84			
			24.0	-15.39	3687.43			
54								
	1	-1002.71						
			.0	-.07	-2.57			
			24.0	-.07	-4.14			
	2	.00						
	3	-154.31						
			.0	-33.52	3687.43			
			24.0	-33.52	2882.93			
55								
	1	-1009.84						
			.0	.02	-4.14			
			24.0	.02	-3.66			
	2	.00						
	3	-154.31						
			.0	-42.62	2882.93			
			24.0	-42.62	1859.99			
56								
	1	-1016.97						
			.0	.06	-3.66			
			24.0	.06	-2.15			
	2	.00						
	3	-154.31						
			.0	-41.06	1859.99			
			24.0	-41.06	874.47			

OLD US 80 BRIDGE AT HASSAYAMPA RIVER, LONG. FRAME, Q Low Chord FLOW

F R A M E E L E M E N T F O R C E S

ELT ID	LOAD COND	AXIAL FORCE	DIST ENDI	1-2 PLANE SHEAR	1-2 PLANE MOMENT	1-3 PLANE SHEAR	1-3 PLANE MOMENT	AXIAL TORQ
1								
	1	.00						
			.0	2.17	.00			
			25.1	2.17	54.42			
			49.1	3.74	144.18			
			73.1	5.84	284.34			
			97.1	7.71	469.38			
			119.9	9.35	682.56			
2								
	1	.00						
			.0	10.44	682.56			
			22.8	10.44	920.60			
			46.8	10.78	1179.32			
			70.8	11.06	1444.76			
			94.8	11.27	1715.24			
			118.8	11.42	1989.32			
3								
	1	.00						
			.0	11.50	1989.32			
			19.2	11.50	2210.12			
			32.4	11.52	2362.18			
4								
	1	.00						
			.0	11.52	2362.18			
			72.0	11.52	3191.62			
5								
	1	.00						
			.0	11.52	3191.62			
			396.0	11.52	7753.54			
6								
	1	.00						
			.0	11.52	7753.54			
			24.0	11.52	8030.02			
7								
	1	.00						
			.0	-5.38	8030.02			
			24.0	-5.38	7900.84			
8								
	1	.00						
			.0	-28.58	7900.84			
			24.0	-28.58	7214.83			
9								
	1	.00						
			.0	-49.36	7214.83			
			24.0	-49.36	6030.24			
10								
	1	.00						
			.0	-65.84	6030.24			
			24.0	-65.84	4450.13			
11								
	1	.00						
			.0	-70.93	4450.13			

OLD US 80 BRIDGE AT HASSAYAMPA RIVER, LONG. FRAME, Q Low Chord FLOW

F R A M E E L E M E N T F O R C E S

ELT ID	LOAD COND	AXIAL FORCE	DIST ENDI	1-2 PLANE SHEAR	1-2 PLANE MOMENT	1-3 PLANE SHEAR	1-3 PLANE MOMENT	AXIAL TORQ
			24.0	-70.93	2747.88			
12								
	1	.00						
			.0	-62.86	2747.88			
			24.0	-62.86	1239.26			
13								
	1	.00						
			.0	-34.42	1239.26			
			36.0	-34.42	.00			

STRUCTURAL CALCULATIONS

FOR

RITTENHOUSE ROAD BRIDGE

OVER

QUEEN CREEK

Registered Professional Engineer (Civil)
CERTIFICATE NO.
14766
ROBERT DAVIS
TURTON
Date Signed 7/9/96
ARIZONA, U.S.A.

Robert D. Turton

Cannon & Associates, Inc.
Consulting Engineers

project no. : CA 94046-1
project : RITTENHOUSE RD. BRIDGE
designed by : JB
checked by : HM
date : 5/96 sht. 1 of 20

BASIS OF ANALYSIS

DESIGN SPECIFICATION

American Association of State Highway and Transportation Officials Standard Specifications for Highway Bridges, 1992 Edition, revised to date.

EXISTING BRIDGE PLANS

As-built bridge plan sheets 2 thru 5 dated March 26, 1969. Rittenhouse Road Bridge over Queen Creek, M.C.H.D. Project No. 812-30.

GEOTECHNICAL INVESTIGATION

Geotechnical Investigation Report by AGRA Earth & Environmental, Inc., Job No. E95-36, dated 4/15/96. Ultimate downward capacity of driven pile foundations were used with a safety factor of 1.0 under critical flow conditions.

HYDRAULIC DATA

Final Scour Analysis Report by Morrison-Maierle/CSSA, Inc. Dated March 1996.
Q_{100} = 3,010 cfs, Average Velocity = 6.4 ft/sec., Angle of Attack = 5 degrees
H.W. Elev. = 1443.2 (Bridge open to traffic)
Total Scour = 15'

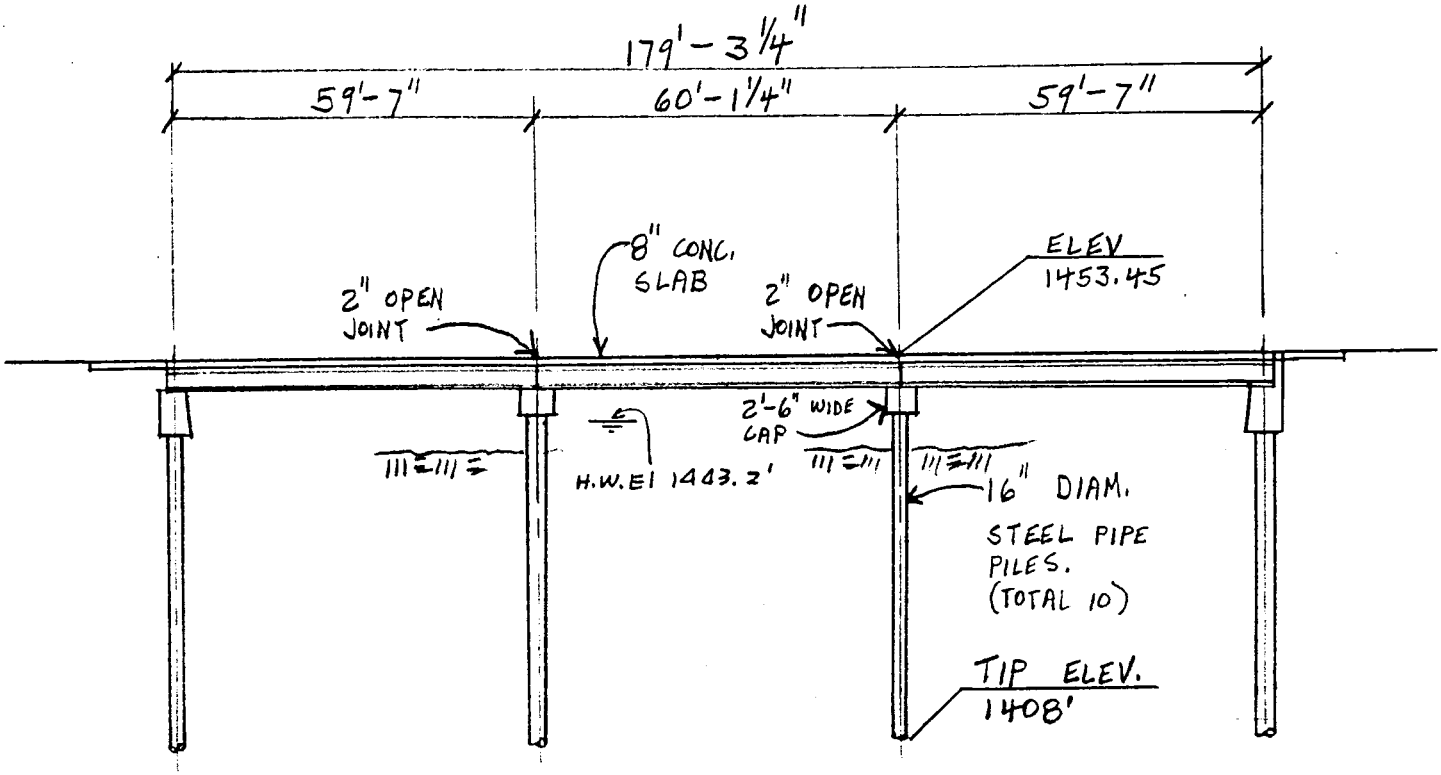

Section @ Construction ℄

Three Span Precast Prestressed Concrete Girder Bridge

15° skew

Cannon & Associates, Inc.
Consulting Engineers

project no. : CA 94046-1
project : BITTENHOUSE RD BRIDGE
designed by : TR
checked by : HM
date : 5/96 sht. 3 of 20

PIER ANALYSIS (Q100 Flow Condition)

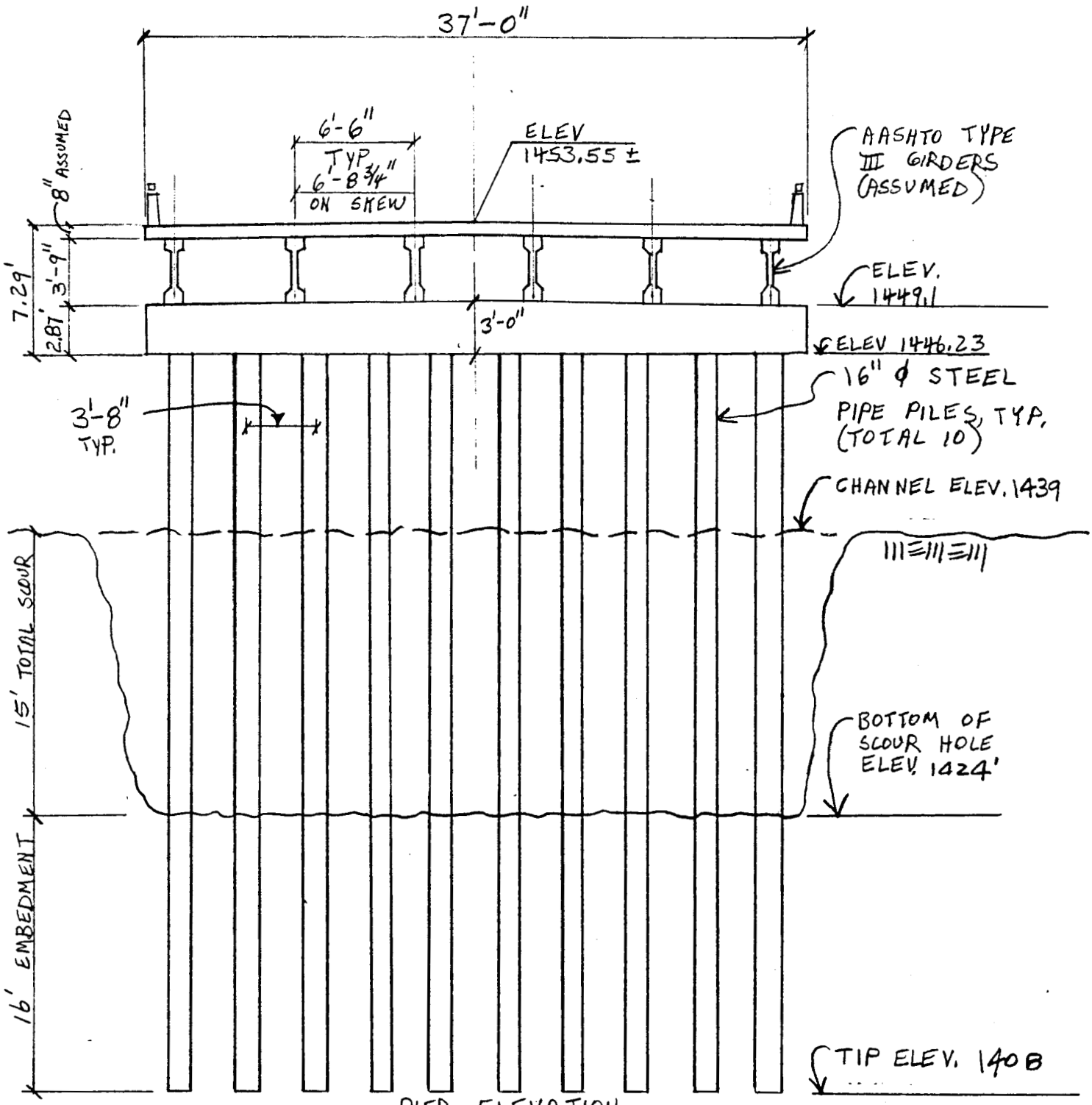

PIER ELEVATION

Cannon & Associates, Inc.
Consulting Engineers

project no. : CA 94046-1
project : RITTENHOUSE RD. BRIDGE
designed by : TB
checked by : HM
date : 5/96 sht. 4 of 20

PIER ANALYSIS, CONT.

DEAD LOAD SUPERSTRUCTURE

DECK	$8''/12(37')(.15^{k}/ft^3)$	$= 3.7^{k}/ft$
BARRIER	USE $0.7^{k}/ft$	$= 0.7$
GIRDERS	$\left(\frac{560 in^2}{144}\right)(.15^{k}/ft^3)(6)$	$= 3.5$
INTERMEDIATE DIAPHRAGMS	$1'(3.75')(30')(.15^{k}/ft^3)(2)/60'$ ← ASSUMED	$= 0.6$
		$DL = 8.5^{k}/ft$

PIER LOADS

DEAD LOAD

SUPERSTRUCTURE REACTION: $8.5^{k}/1\left(\frac{60.10 + 59.58'}{2}\right) = 508.7^{k}$

DIAPHRAGMS @ PIERS: $2'(3.75')(30').15^{k}/ft^3 = 33.8$

PIER CAP: $2.94'(2.5')(37')(.15^{k}/ft^3) = 40.8^{k}$

$DL = 583.3^{k}$

Dead Load per girder

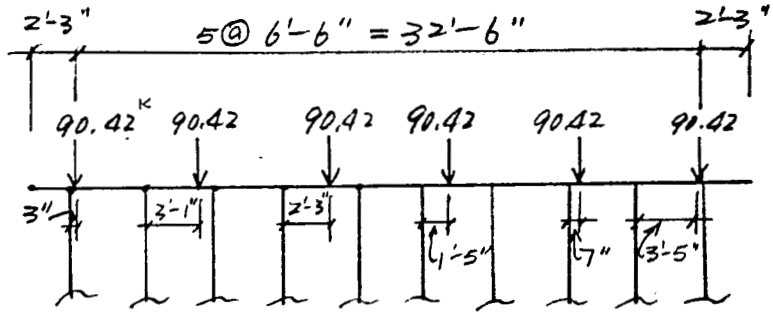

from sht. 5:

$(508.7^{k} + 33.8^{k})/6$ ← Girders

$= 90.42^{k}$

Pier Analysis (CONT.)

Live Load (without impact), HS20, 2 lanes, Bridge is Simple Span.

$$LL = 32^k + 32^k\left(\frac{46'}{60'}\right) + 8^k\left(\frac{45.6}{59.6'}\right) = 62.7\ ^k/\text{lanes}$$

$$\omega_{LL} = 62.7\ ^k/\text{lane}\ \left(\frac{1}{2}\right) = 31.4\ ^k/\text{wheel}$$

Live Load on Deck

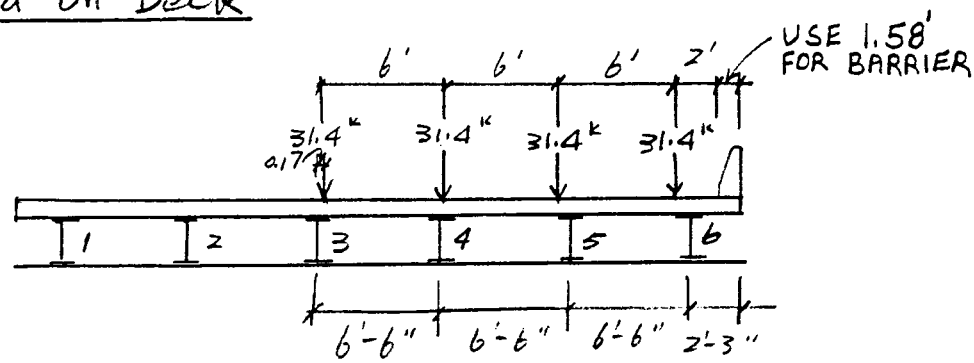

$G1 = 0$

$G2 = 0$

$G3 = 31.4\left(\frac{6.33}{6.5} + \frac{0.33}{6.5}\right) = 32.17^k$

$G4 = 31.4\left(\frac{0.17}{6.5} + \frac{6.17}{6.5} + \frac{0.83}{6.5}\right) = 34.64^k$

$G5 = 31.4\left(\frac{5.67}{6.5} + \frac{1.33}{6.5}\right) = 33.82^k$

$G6 = 31.4\left(\frac{5.17}{6.5}\right) = 24.98^k$

Live Load per girder

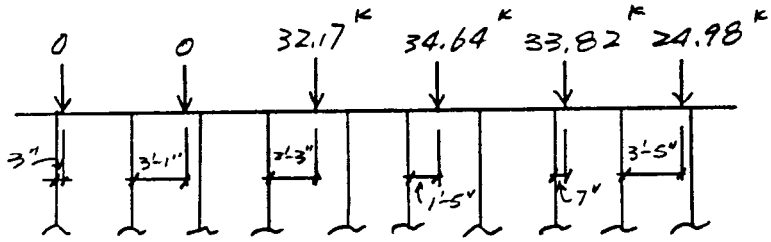

PIER ANALYSIS, CONT.

DETERMINE COMPOSITE PROPERTIES OF PILES

USE UNION METAL PILE PER AHD STD DRWG CP-6

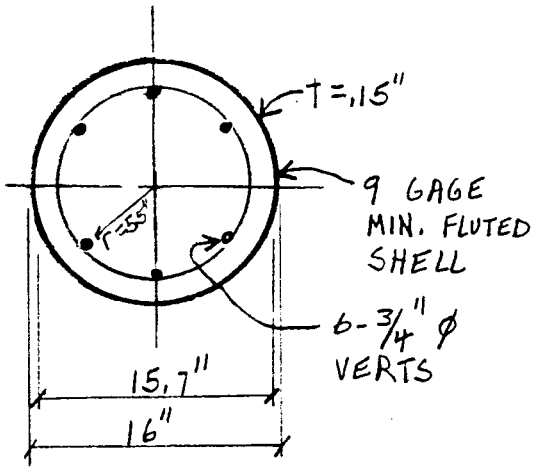

STEEL SHELL:

$F_y = 30^{ksi}$ (ASSUMED ASTM A252 GRADE 1)

$E = 29{,}000^{ksi}$

$A_{SHELL} = \pi(16^2 - 15.7^2)/4 = 7.47 \text{ in}^2$

$I_{SHELL} = \pi(16^4 - 15.7^4)/64 = 234.6 \text{ in}^4$

$r_{SHELL} = \sqrt{I/A} = 5.60'' > .3(16'') = 4.8''$ O.K.

$Z = \left(\frac{16^3 - 15.7^3}{6}\right) = 37.7 \text{ in}^3$

CONCRETE:

$f_c' = 2500^{psi}$ CLASS A (PER PLANS)

$E_c = 57\sqrt{2500} = 2850^{ksi}$

$A_c = \pi(15.7'')^2/4 = 193.6 \text{ in}^2$

$I_c = \pi(15.7)^4/64 = 2982 \text{ in}^4$

$I_{cr} \approx 0.4 I_g = 1193 \text{ in}^4$

REINFORCING STEEL:

The vertical reinforcing in the piles does not extend the full length of the pile. Therefore, neglect the contribution of reinforcing steel to the stiffness of piles.

PIER ANALYSIS, CONT.

COMPOSITE SECTION:

$$A = \pi (16'')^2/4 = 201.1 \text{ in}^2$$

$$A_{SHELL}/A = \frac{7.47}{201.1} = 3.7\% \approx 4\% \quad \underline{\text{o.k.}}$$

$$E_m = E_s + C_3 E_c A_c / A_{shell}$$

$$E_m = 29000 + .4(2850)\left(\frac{193.6}{7.47}\right) = 58{,}545^{ksi}$$

$$EI = E_s(\overset{\text{negelect}}{I_r} + I_s) + C_3 E_c I_c / (1 + \overset{0}{M_d/M_v})$$

$$EI = 29000(0 + 234.6) + 0.4(2850)(2982) = 10{,}202{,}880 \text{ k-in}^2$$

$$I_m = \frac{EI}{E_m} = 174 \text{ in}^4 \Rightarrow \pi d^4/64 \Rightarrow d \approx 7.72''$$

PILE SLENDERNESS (LONGITUDINAL DIRECTION CONTROLS)

$$E_m = 58545 \text{ ksi}$$

$$r_m = r_{shell} = 5.6''$$

$$F_{my} = F_y + C_1 F_{yr}(\overset{\text{negelect}}{A_r}/A_s) + C_2 f_c'(A_c/A_s)$$

$$F_{my} = 30^{ksi} + 0 + 0.85(2.5^{ksi})\left(\frac{193.6}{7.47}\right) = 85.1^{ksi}$$

$$\lambda_c = \frac{kl}{r_m \pi}\sqrt{\frac{F_{my}}{E_m}} = \frac{2.1(23.23)(12''/1)}{5.6''\ \pi}\sqrt{\frac{85.1}{58{,}545}} = 1.27 < 1.5$$

$$F_{cr} = (0.658^{\lambda_c^2})F_{my} = (0.658^{1.61})85.1^{ksi} = 43.4^{ksi}$$

$$\phi P_n = \phi A_s F_{cr} = 0.85(7.47 \text{ in}^2)(43.4^{ksi}) = 275.6^{k}$$

PIER ANALYSIS, CONT'D

LATERAL ANALYSIS

CHECK IF PILES ARE FLEXIBLE OR RIGID:

SOIL TYPE: SAND & GRAVEL, DENSE TO VERY DENSE.

n_h = CONSTANT OF HORIZONAL SUBGRADE REACTION

$$\approx \left(\frac{240^{pci} - 0}{15'}\right)\frac{16''}{12} = 21.3 \ \#/in^3$$

SLOPE OF 'K' PER AGRA CHART - ½" CURVE, sheet 20

$$\eta = \sqrt[5]{\frac{n_h}{EI}} = \sqrt[5]{\frac{21.3 \ pci}{10782010}} = 0.0723$$

$$\eta L = 0.0723(15')(12''/1) = 13.02 > 2$$

∴ CONSIDER AS FLEXIBLE PILE.

Pier Analysis (CONT.)

Lateral Analysis – Q100 Flow Conditions

Stream Flow Forces

H.W. Elev = 1443.2'

Avg. Velocity = 6.40 ft/sec

Angle of ~~Attack~~ = 5°, use 10° (~~Attack~~ ∡ + 5°) for analysis.

Total Scour = 15'.

Pile Spacing = 3'-8" − 16" = 2'-4" < 16'

Stream Force Criterian

- Pile spacing = 2'-4" < 16', ∴ Assume all piles act as one block to carry stream flow force. Use abstruction width based on projected area at 10° with 2' of debris at each side of projected area.

- Assume stream force is equally distributed to each pile.
- Use K = 1.4 for piles with debris at first 12' from H.W. ELEVATION.

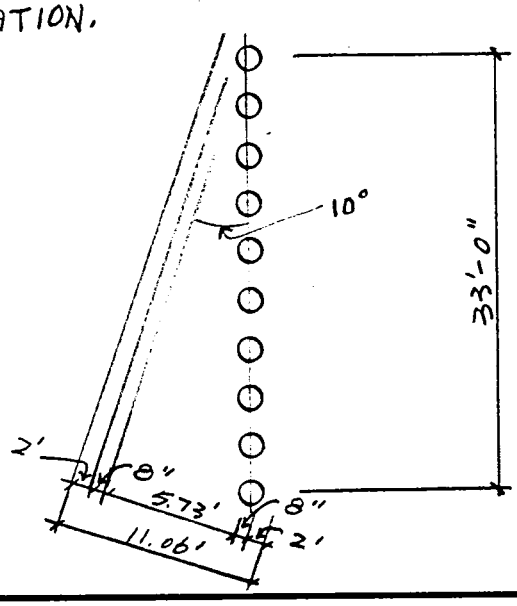

Projected Width @ Pile:

$33'(\sin 10°) + \frac{16''}{12} + 2(2')$

$= 11.06'$

Pier Analysis (cont.)

Stream Forces

$$P_{max} = 2\,P_{avg.} = 2\left[(1.4)(6.4)^2\right]/1000 = 0.115 \ ^{k/ft^2}$$

$$\Delta P = 0.115^{ksf}/(1443.2 - 1439) = 0.027^{ksf/'}$$

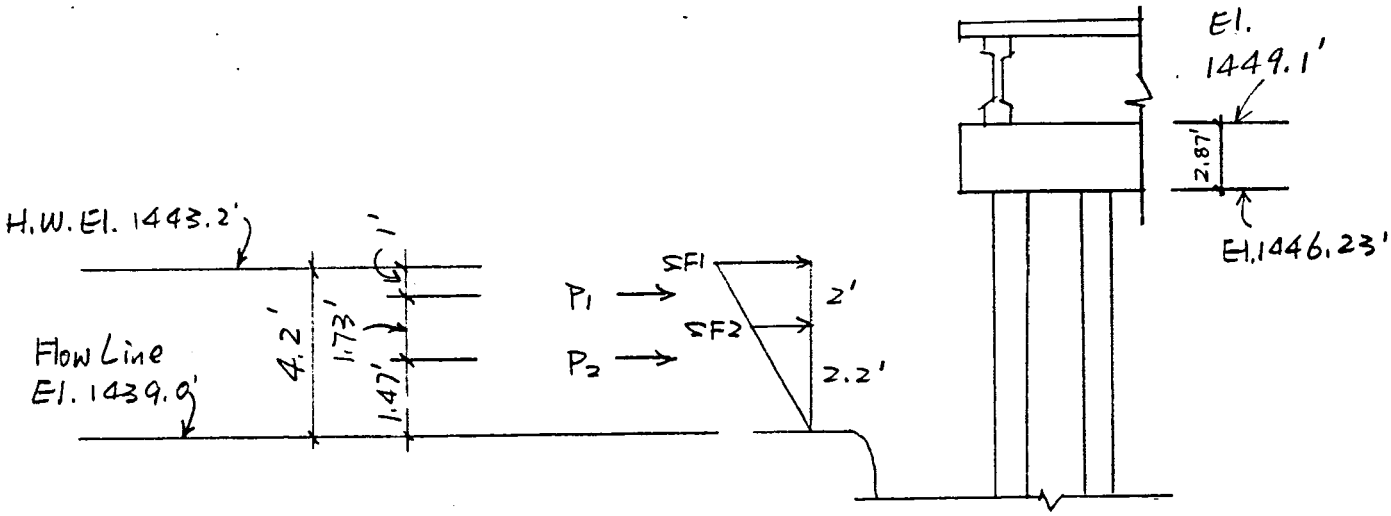

$$SF1 = 0.115(11.06) = 1.27 \ ^{k/'}$$

$$SF2 = [0.115 - 2(0.027)](11.06) = 0.67 \ ^{k/'}$$

Equivalent Concentrated Loads from Stream Force on Pier:

$$P_1 = (1.27 + 0.67)(\tfrac{1}{2})(2') = 1.94 \ ^{k}$$

$$P_2 = (0.67 + 0)(\tfrac{1}{2})(2.2') = 0.74 \ ^{k}$$

Resolve total stream forces into longitudinal & transverse directions and divide equally between each column.

Transverse Direction: $\cos 10° = 0.9848$

Longitudinal Direction: $\sin 10° = 0.1736$

Pier Analysis (CONT.)

$P_{1T} = 1.94(0.9848)/10_{piles} = 0.191^k$, $P_{1L} = 0.0337^k$

$P_{2T} = 0.74(0.9848)/10 = 0.0729^k$, $P_{2L} = 0.0128^k$

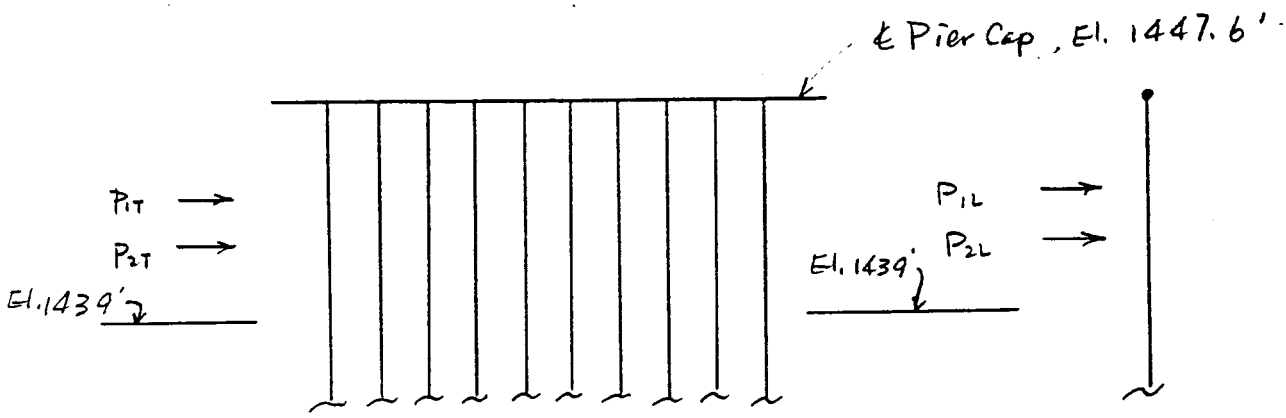

Transverse Model
(Loads per pile)

Longitudinal Model
(Loads per pile)

See Computer Analysis (sheet 16) for MODELS AND RESULTS.

PIER ANALYSIS, CONT.

RESULTS FROM TRANSVERSE FRAME ANALYSIS (TRAILING PILE)

TOP OF PILE: (MEM 93) $P_{DL} = 77.08^k$ $P_{LL} = 19.45^k$ $P_{SF} = 1.04^k$

$M_{DL} = 0.21^{1-k}$ $M_{LL} = 0.02^{1-k}$ $M_{SF} = -2.91^{1-k}$

BOTT. OF PILE: (PT. OF MAX MOM.) MEM 97 $P_{DL} = 82.15^k$ $P_{LL} = 19.45^k$ $P_{SF} = 1.04^k$

$M_{DL} = -.05^{1-k}$ $M_{LL} = 0$ $M_{LL} = 2.48^{1-k}$

RESULTS FROM LONGITUDINAL FRAME ANALYSIS

TOP OF PILE: $P_{SF} = 0$ $M_{SF} = 0$

BOTT. OF PILE: (PT. OF MAX MOM) MEM 4 $P_{SF} = 0$ $M_{SF} = 0.92^{1-k}$

Check Ultimate Downward Capacity of Soil

$P_{TL} = 82.15^k + 19.45^k + 1.04^k = 102.6^k$

Ultimate Downward Capacity of Soil $= 79^k < 102.6^k$ N.G.
(W/ SAFETY FACTOR = 1.0) ↑ AGRA Chart, see sheet 15.

PILE TIP ELEVATION = 1408'

EMBEDMENT DEPTH PROVIDED = 1423' − 1408' = 15'

EMBEDMENT DEPTH REQUIRED = 1423' − 1404' = 19' > 15' N.G.

∴ PILES NOT ADEQUATE

Pier Analysis (CONT.)

CHECK VERTICAL CAPACITY OF PILES BASED ON STRENGTH DESIGN METHOD

USE GROUP VII LOADING PLUS LIVE LOAD PLUS IMPACT

$1.3[\beta_D D + \beta_{L+I}(L+I) + \beta_E E + 1.0B + 1.0SF]$ (Without Earthquake)

$\beta_D = 1.0 \quad \beta_{L+I} = 1.0 \quad I = \frac{50}{60' + 125'} = 0.27$

$P_U = 1.3[1.0(82.15^K) + 1.27(19.45) + (1.04)]$

$P_U = 140.2^K < \phi P_n = 275.6^K$ (see sht. 8) O.K.

Summary of Results

Under Q_{100} and greater flow conditions, the bridge piers are determined to be scour critical due to insufficient downward capacity of the soil to resist the dead Load, Live Load, and Lateral stream flow forces.

PIER ANALYSIS, CONT.

Project Rittenhouse Road Bridge Job No. E95-36

FIGURE 6

ESTIMATED ULTIMATE DOWNWARD CAPACITY OF DRIVEN, PIPE PILES

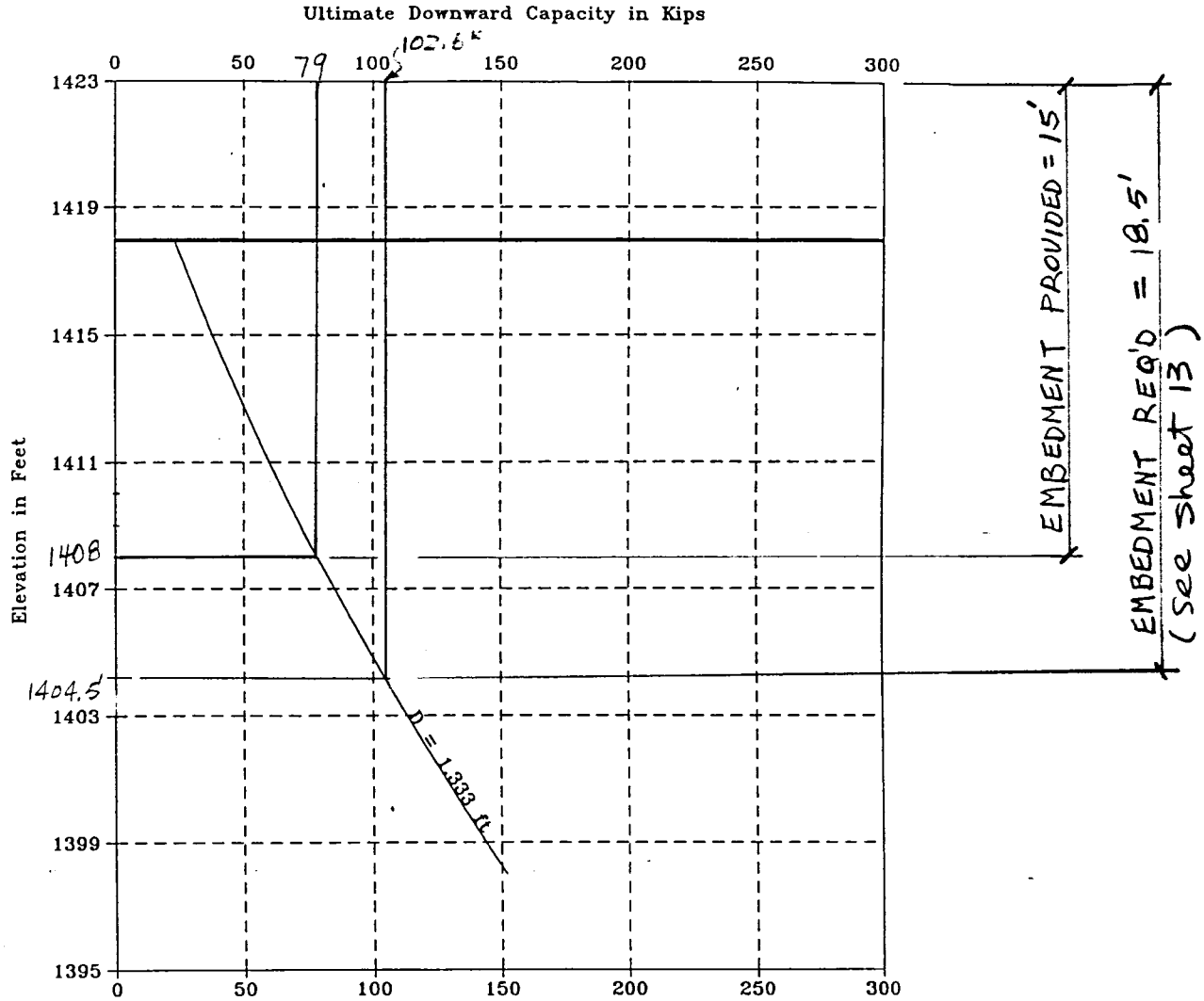

AGRA
Earth & Environmental, Inc.

REFERENCE: GEOTECHNICAL INVESTIGATION REPORT
AGRA EARTH & ENVIRONMENTAL, INC.
JOB NO. E95-36 DATED 4/15/96

COMPUTER ANALYSIS

Computer Models (cont.)

Transverse Pier Frame Model (Q100 Flow Condition)

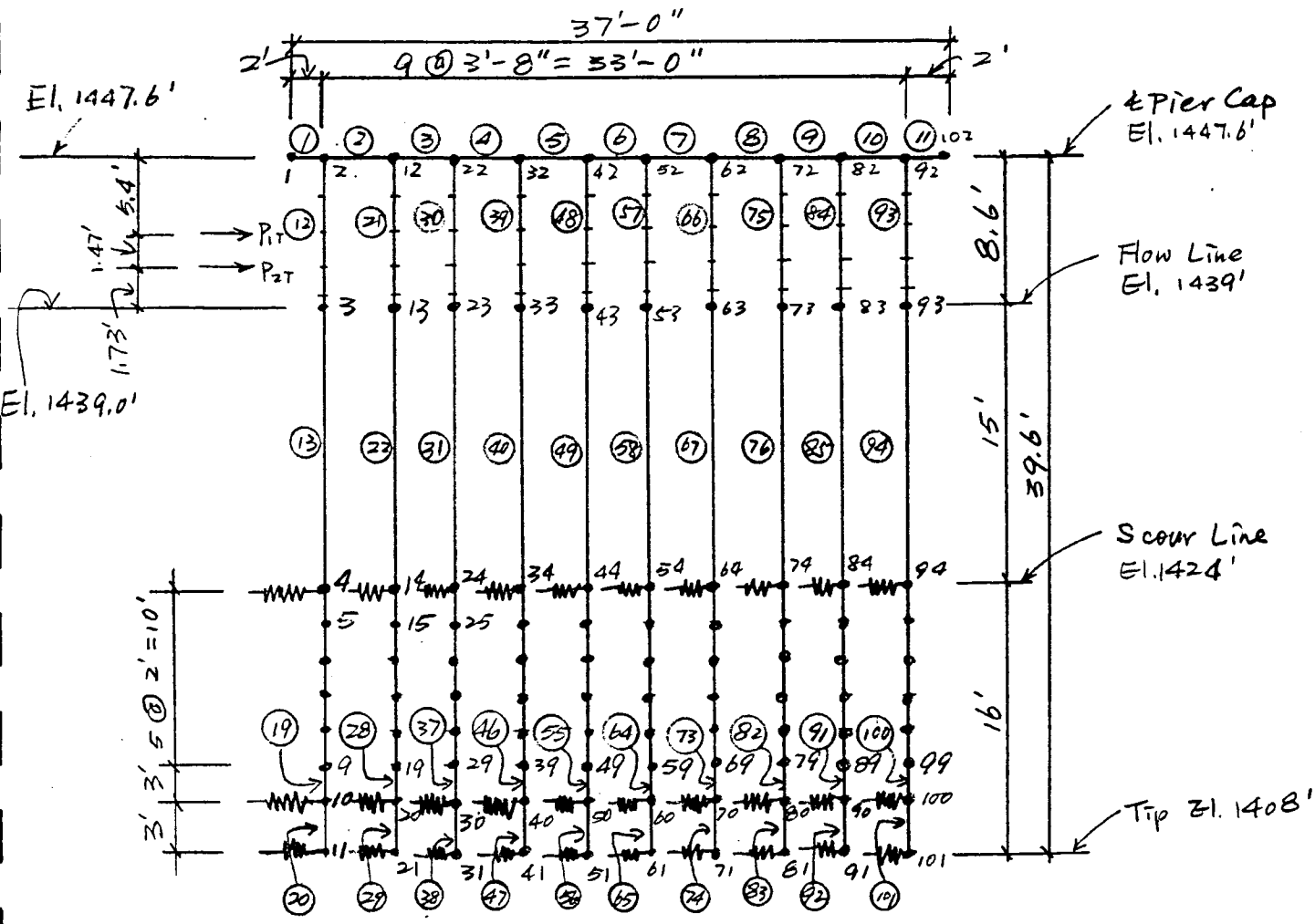

$I_{cap} = \frac{1}{12}(30")(35")^3 = 107188 \text{ in}^4$, $A_{cap} = 1050 \text{ in}^2$, $\omega = 0.091$ k/in, $E = 3043$ ksi

$I_{pile} = 174 \text{ in}^4$ (sht. 10), $A_{pile} = 201 \text{ in}^2$, $\omega = 0.0174$ k/in, $E = 58545$ ksi

Computer Models (CONT.)

Longitudinal Pier Frame Model (Q_{100} Flow, Cantilever)

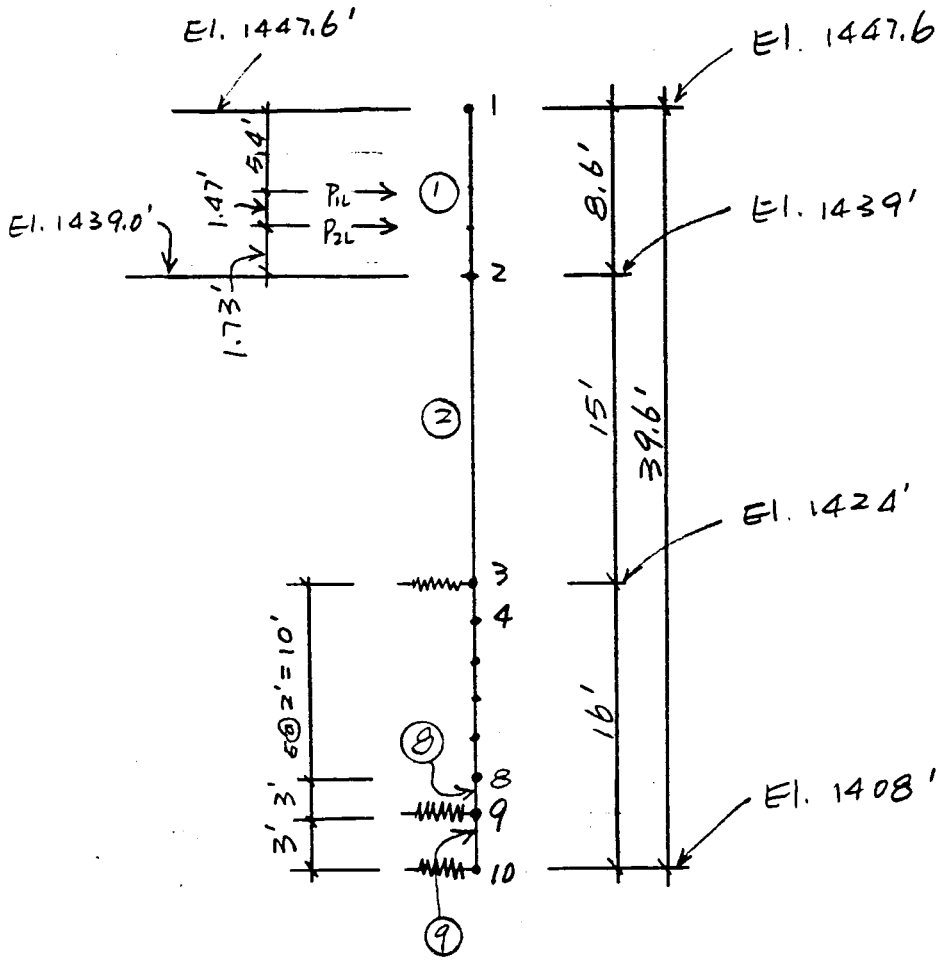

Computer Models

Spring Constants (Q100)

Based on Lateral subgrade modulus (K) provided by AGRA charts (Sheet 11), spring constants = (k)(pile ϕ)(Node Spacing)
= k(16")(24")

1/2" Deflection Curve

Depth below Scour Line (ft)	Subgrade Modulus (k) pci	Spring Constant k/in
0	0	0(0.7) = 0
2	32	12.3(0.7) = 9
4	50	19.2(0.7) = 13
6	68	26.1(0.7) = 18
8	110	42.2(0.7) = 30
10	140 (16")(30")	67.2(0.7) = 47
13	205 (16")(36")	118.1(0.7) = 83
16	270 (16")(18")	77.8(0.7) = 54

↑ (See Note Below)

Note: 0.7 is the Group Action Reduction Factor As Recommended by AGRA Earth & Environmental.

PIER ANALYSIS, CONT.

Figure 17 - Rittenhouse Road
16-Inch Pipe Pile

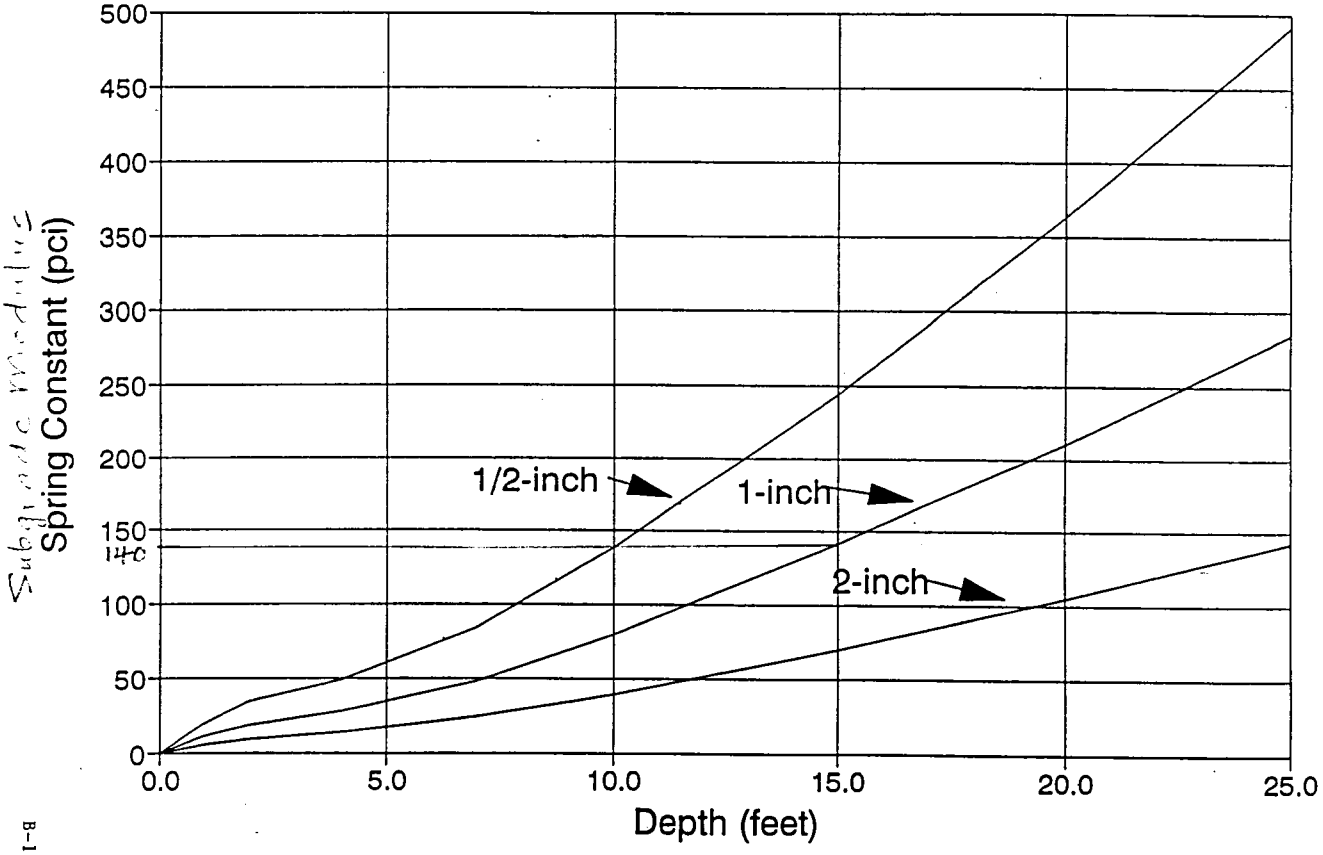

Subgrade Modulus

B-17

Reference: Geotechnical Investigation Report, AGRA EARTH & ENVIRONMENTAL, INC., Job No. E95-36, dated 4/15/96.

Cannon & Associates, Inc.
Consulting Engineers

project no.: CA 94046-1
project: Rittenhouse Rd. Bridge
designed by: TB
checked by: HM
date: 5/96 sht. 20 of 20

RITTENHOUSE ROAD BRIDGE AT QUEEN CREEK RIVER, TRANS. FRAME, Q100 FLOW

F R A M E E L E M E N T F O R C E S

ELT ID	LOAD COND	AXIAL FORCE	DIST ENDI	1-2 PLANE SHEAR	1-2 PLANE MOMENT	1-3 PLANE SHEAR	1-3 PLANE MOMENT	AXIAL TORQ
1								
	1	.00						
			.0	.00	.00			
			24.0	-2.18	-26.21			
	2	.00						
			.0	.00	.00			
			24.0	.00	.00			
	3	.00						
			.0	.00	.00			
			24.0	.00	.00			
2								
	1	.01						
			.0	74.00	-23.67			
			3.0	73.73	197.91			
			44.0	-20.43	-563.03			
	2	.00						
			.0	-.33	.24			
			44.0	-.33	-14.08			
	3	.00						
			.0	-1.04	34.92			
			44.0	-1.04	-10.82			
3								
	1	.01						
			.0	30.46	-562.59			
			37.0	27.10	502.32			
			44.0	-63.96	56.83			
	2	.00						
			.0	-1.20	-13.93			
			44.0	-1.20	-66.57			
	3	.00						
			.0	-.95	24.27			
			44.0	-.95	-17.53			
4								
	1	.01						
			.0	-7.91	57.67			
			44.0	-11.91	-378.48			
	2	.00						
			.0	.38	-66.98			
			44.0	.38	-50.04			
	3	.00						
			.0	-.82	17.60			
			44.0	-.82	-18.29			
5								
	1	.01						
			.0	40.58	-379.65			
			27.0	38.12	682.75			
			44.0	-53.85	-219.51			
	2	.00						
			.0	12.53	-51.25			
			27.0	12.53	287.01			
			44.0	-19.64	-46.90			
	3	.00						

RITTENHOUSE ROAD BRIDGE AT QUEEN CREEK RIVER, TRANS. FRAME, Q100 FLOW

F R A M E E L E M E N T F O R C E S

ELT ID	LOAD COND	AXIAL FORCE	DIST ENDI	1-2 PLANE SHEAR	1-2 PLANE MOMENT	1-3 PLANE SHEAR	1-3 PLANE MOMENT	AXIAL TORQ
			.0	-.79	16.84			
			44.0	-.79	-17.78			
6								
	1	.02						
			.0	2.00	-218.12			
			22.0	.00	-196.10			
			44.0	-2.00	-218.12			
	2	.00						
			.0	-.58	-46.49			
			44.0	-.58	-72.05			
	3	.00						
			.0	-.79	17.35			
			44.0	-.79	-17.35			
7								
	1	.01						
			.0	53.85	-219.51			
			17.0	52.30	682.75			
			44.0	-40.58	-379.65			
	2	.00						
			.0	19.73	-72.45			
			17.0	19.73	262.92			
			44.0	-14.91	-139.71			
	3	.00						
			.0	-.79	17.78			
			44.0	-.79	-16.84			
8								
	1	.01						
			.0	11.91	-378.48			
			44.0	7.91	57.67			
	2	.00						
			.0	4.00	-139.09			
			44.0	4.00	36.96			
	3	.00						
			.0	-.82	18.29			
			44.0	-.82	-17.60			
9								
	1	.01						
			.0	63.96	56.83			
			7.0	63.32	502.32			
			44.0	-30.46	-562.59			
	2	.00						
			.0	23.78	36.88			
			7.0	23.78	203.31			
			44.0	-10.04	-168.34			
	3	.00						
			.0	-.95	17.53			
			44.0	-.95	-24.27			
10								
	1	.01						
			.0	20.43	-563.03			
			41.0	16.69	197.91			
			44.0	-74.00	-23.67			

RITTENHOUSE ROAD BRIDGE AT QUEEN CREEK RIVER, TRANS. FRAME, Q100 FLOW

F R A M E E L E M E N T F O R C E S

ELT ID	LOAD COND	AXIAL FORCE	DIST ENDI	1-2 PLANE SHEAR	1-2 PLANE MOMENT	1-3 PLANE SHEAR	1-3 PLANE MOMENT	AXIAL TORQ
	2	.00						
			.0	5.53	-167.95			
			41.0	5.53	58.64			
			44.0	-19.45	.28			
	3	.00						
			.0	-1.04	10.82			
			44.0	-1.04	-34.92			
11								
	1	.00						
			.0	2.18	-26.21			
			24.0	.00	.00			
	2	.00						
			.0	.00	.00			
			24.0	.00	.00			
	3	.00						
			.0	.00	.00			
			24.0	.00	.00			
12								
	1	-77.08						
			.0	.01	-2.54			
			103.2	.01	-1.55			
	2	.33						
			.0	.00	-.24			
			103.2	.00	-.12			
	3	1.04						
			.0	.00	-34.92			
			64.8	.00	-34.96			
			82.4	.19	-31.60			
			103.2	.26	-26.14			
21								
	1	-51.79						
			.0	.00	-.45			
			103.2	.00	-.27			
	2	.87						
			.0	.00	-.14			
			103.2	.00	-.07			
	3	-.09						
			.0	.00	-35.09			
			64.8	.00	-35.09			
			82.4	.19	-31.72			
			103.2	.26	-26.24			
30								
	1	-56.95						
			.0	.00	-.83			
			103.2	.00	-.51			
	2	-1.58						
			.0	.00	.41			
			103.2	.00	.27			
	3	-.13						
			.0	.00	-35.14			
			64.8	.00	-35.12			
			82.4	.19	-31.75			

RITTENHOUSE ROAD BRIDGE AT QUEEN CREEK RIVER, TRANS. FRAME, Q100 FLOW

F R A M E E L E M E N T F O R C E S

ELT ID	LOAD COND	AXIAL FORCE	DIST ENDI	1-2 PLANE SHEAR	1-2 PLANE MOMENT	1-3 PLANE SHEAR	1-3 PLANE MOMENT	AXIAL TORQ
			103.2	.26	-26.27			
39								
	1	-53.39						
			.0	.00	1.16			
			103.2	.00	.71			
	2	-12.14						
			.0	.00	1.21			
			103.2	.00	.76			
	3	-.03						
			.0	.00	-35.13			
			64.8	.00	-35.12			
			82.4	.19	-31.75			
			103.2	.26	-26.26			
48								
	1	-56.75						
			.0	.01	-1.39			
			103.2	.01	-.85			
	2	-19.06						
			.0	.00	-.42			
			103.2	.00	-.23			
	3	.00						
			.0	.00	-35.13			
			64.8	.00	-35.11			
			82.4	.19	-31.74			
			103.2	.26	-26.26			
57								
	1	-56.75						
			.0	-.01	1.39			
			103.2	-.01	.85			
	2	-20.31						
			.0	.00	.39			
			103.2	.00	.26			
	3	.00						
			.0	.00	-35.13			
			64.8	.00	-35.11			
			82.4	.19	-31.74			
			103.2	.26	-26.26			
66								
	1	-53.39						
			.0	.00	-1.16			
			103.2	.00	-.71			
	2	-18.91						
			.0	.00	-.63			
			103.2	.00	-.36			
	3	.03						
			.0	.00	-35.13			
			64.8	.00	-35.12			
			82.4	.19	-31.75			
			103.2	.26	-26.26			
75								
	1	-56.95						
			.0	.00	.83			

RITTENHOUSE ROAD BRIDGE AT QUEEN CREEK RIVER, TRANS. FRAME, Q100 FLOW

F R A M E E L E M E N T F O R C E S

ELT ID	LOAD COND	AXIAL FORCE	DIST ENDI	1-2 PLANE SHEAR	1-2 PLANE MOMENT	1-3 PLANE SHEAR	1-3 PLANE MOMENT	AXIAL TORQ
			103.2	.00	.51			
	2	-19.77						
			.0	.00	.07			
			103.2	.00	.07			
	3	.13						
			.0	.00	-35.14			
			64.8	.00	-35.12			
			82.4	.19	-31.75			
			103.2	.26	-26.27			
84	----------							
	1	-51.79						
			.0	.00	.45			
			103.2	.00	.27			
	2	-15.57						
			.0	.00	-.39			
			103.2	.00	-.22			
	3	.09						
			.0	.00	-35.09			
			64.8	.00	-35.09			
			82.4	.19	-31.72			
			103.2	.26	-26.24			
93	----------							
	1	-77.08						
			.0	-.01	2.54			
			103.2	-.01	1.55			
	2	-19.45						
			.0	.00	.28			
			103.2	.00	.19			
	3	-1.04						
			.0	.00	-34.92			
			64.8	.00	-34.96			
			82.4	.19	-31.60			
			103.2	.26	-26.14			
13	----------							
	1	-79.54						
			.0	.01	-1.55			
			180.0	.01	.18			
	2	.33						
			.0	.00	-.12			
			180.0	.00	.08			
	3	1.04						
			.0	.26	-26.14			
			180.0	.26	21.26			
22	----------							
	1	-54.25						
			.0	.00	-.27			
			180.0	.00	.03			
	2	.87						
			.0	.00	-.07			
			180.0	.00	.07			
	3	-.09						
			.0	.26	-26.24			

RITTENHOUSE ROAD BRIDGE AT QUEEN CREEK RIVER, TRANS. FRAME, Q100 FLOW

F R A M E E L E M E N T F O R C E S

ELT ID	LOAD COND	AXIAL FORCE	DIST ENDI	1-2 PLANE SHEAR	1-2 PLANE MOMENT	1-3 PLANE SHEAR	1-3 PLANE MOMENT	AXIAL TORQ
			180.0	.26	21.27			
31								
	1	-59.41						
			.0	.00	-.51			
			180.0	.00	.06			
	2	-1.58						
			.0	.00	.27			
			180.0	.00	.03			
	3	-.13						
			.0	.26	-26.27			
			180.0	.26	21.27			
40								
	1	-55.85						
			.0	.00	.71			
			180.0	.00	-.08			
	2	-12.14						
			.0	.00	.76			
			180.0	.00	-.03			
	3	-.03						
			.0	.26	-26.26			
			180.0	.26	21.27			
49								
	1	-59.21						
			.0	.01	-.85			
			180.0	.01	.10			
	2	-19.06						
			.0	.00	-.23			
			180.0	.00	.09			
	3	.00						
			.0	.26	-26.26			
			180.0	.26	21.27			
58								
	1	-59.21						
			.0	-.01	.85			
			180.0	-.01	-.10			
	2	-20.31						
			.0	.00	.26			
			180.0	.00	.03			
	3	.00						
			.0	.26	-26.26			
			180.0	.26	21.27			
67								
	1	-55.85						
			.0	.00	-.71			
			180.0	.00	.08			
	2	-18.91						
			.0	.00	-.36			
			180.0	.00	.10			
	3	.03						
			.0	.26	-26.26			
			180.0	.26	21.27			

RITTENHOUSE ROAD BRIDGE AT QUEEN CREEK RIVER, TRANS. FRAME, Q100 FLOW

F R A M E E L E M E N T F O R C E S

ELT ID	LOAD COND	AXIAL FORCE	DIST ENDI	1-2 PLANE SHEAR	1-2 PLANE MOMENT	1-3 PLANE SHEAR	1-3 PLANE MOMENT	AXIAL TORQ
76								
	1	-59.41						
			.0	.00	.51			
			180.0	.00	-.06			
	2	-19.77						
			.0	.00	.07			
			180.0	.00	.05			
	3	.13						
			.0	.26	-26.27			
			180.0	.26	21.27			
85								
	1	-54.25						
			.0	.00	.27			
			180.0	.00	-.03			
	2	-15.57						
			.0	.00	-.22			
			180.0	.00	.09			
	3	.09						
			.0	.26	-26.24			
			180.0	.26	21.27			
94								
	1	-79.54						
			.0	-.01	1.55			
			180.0	-.01	-.18			
	2	-19.45						
			.0	.00	.19			
			180.0	.00	.04			
	3	-1.04						
			.0	.26	-26.14			
			180.0	.26	21.26			
14								
	1	-81.32						
			.0	.01	.18			
			24.0	.01	.41			
	2	.33						
			.0	.00	.08			
			24.0	.00	.10			
	3	1.04						
			.0	.26	21.26			
			24.0	.26	27.58			
15								
	1	-81.74						
			.0	.01	.41			
			24.0	.01	.54			
	2	.33						
			.0	.00	.10			
			24.0	.00	.11			
	3	1.04						
			.0	.09	27.58			
			24.0	.09	29.74			
16								
	1	-82.15						

RITTENHOUSE ROAD BRIDGE AT QUEEN CREEK RIVER, TRANS. FRAME, Q100 FLOW

F R A M E E L E M E N T F O R C E S

ELT ID	LOAD COND	AXIAL FORCE	DIST ENDI	1-2 PLANE SHEAR	1-2 PLANE MOMENT	1-3 PLANE SHEAR	1-3 PLANE MOMENT	AXIAL TORQ
			.0	.00	.54			
			24.0	.00	.57			
	2	.33						
			.0	.00	.11			
			24.0	.00	.11			
	3	1.04						
			.0	-.07	29.74			
			24.0	-.07	28.08			
17								
	1	-82.57						
			.0	.00	.57			
			24.0	.00	.51			
	2	.33						
			.0	.00	.11			
			24.0	.00	.09			
	3	1.04						
			.0	-.19	28.08			
			24.0	-.19	23.48			
18								
	1	-82.99						
			.0	-.01	.51			
			24.0	-.01	.39			
	2	.33						
			.0	.00	.09			
			24.0	.00	.07			
	3	1.04						
			.0	-.28	23.48			
			24.0	-.28	16.73			
19								
	1	-83.51						
			.0	-.01	.39			
			36.0	-.01	.15			
	2	.33						
			.0	.00	.07			
			36.0	.00	.02			
	3	1.04						
			.0	-.30	16.73			
			36.0	-.30	5.83			
20								
	1	-84.14						
			.0	.00	.15			
			36.0	.00	.00			
	2	.33						
			.0	.00	.02			
			36.0	.00	.00			
	3	1.04						
			.0	-.16	5.83			
			36.0	-.16	.00			
29								
	1	-58.85						
			.0	.00	.03			
			36.0	.00	.00			

RITTENHOUSE ROAD BRIDGE AT QUEEN CREEK RIVER, TRANS. FRAME, Q100 FLOW

F R A M E E L E M E N T F O R C E S

ELT ID	LOAD COND	AXIAL FORCE	DIST ENDI	1-2 PLANE SHEAR	1-2 PLANE MOMENT	1-3 PLANE SHEAR	1-3 PLANE MOMENT	AXIAL TORQ
	2	.87						
			.0	.00	.02			
			36.0	.00	.00			
	3	-.09						
			.0	-.16	5.84			
			36.0	-.16	.00			
38								
	1	-64.00						
			.0	.00	.05			
			36.0	.00	.00			
	2	-1.58						
			.0	.00	-.01			
			36.0	.00	.00			
	3	-.13						
			.0	-.16	5.84			
			36.0	-.16	.00			
47								
	1	-60.45						
			.0	.00	-.07			
			36.0	.00	.00			
	2	-12.14						
			.0	.00	-.06			
			36.0	.00	.00			
	3	-.03						
			.0	-.16	5.84			
			36.0	-.16	.00			
56								
	1	-63.80						
			.0	.00	.08			
			36.0	.00	.00			
	2	-19.06						
			.0	.00	.03			
			36.0	.00	.00			
	3	.00						
			.0	-.16	5.84			
			36.0	-.16	.00			
65								
	1	-63.80						
			.0	.00	-.08			
			36.0	.00	.00			
	2	-20.31						
			.0	.00	-.01			
			36.0	.00	.00			
	3	.00						
			.0	-.16	5.84			
			36.0	-.16	.00			
74								
	1	-60.45						
			.0	.00	.07			
			36.0	.00	.00			
	2	-18.91						
			.0	.00	.05			

RITTENHOUSE ROAD BRIDGE AT QUEEN CREEK RIVER, TRANS. FRAME, Q100 FLOW

F R A M E E L E M E N T F O R C E S

ELT ID	LOAD COND	AXIAL FORCE	DIST ENDI	1-2 PLANE SHEAR	1-2 PLANE MOMENT	1-3 PLANE SHEAR	1-3 PLANE MOMENT	AXIAL TORQ
			36.0	.00	.00			
	3	.03						
			.0	-.16	5.84			
			36.0	-.16	.00			
83								
	1	-64.00						
			.0	.00	-.05			
			36.0	.00	.00			
	2	-19.77						
			.0	.00	.01			
			36.0	.00	.00			
	3	.13						
			.0	-.16	5.84			
			36.0	-.16	.00			
92								
	1	-58.85						
			.0	.00	-.03			
			36.0	.00	.00			
	2	-15.57						
			.0	.00	.03			
			36.0	.00	.00			
	3	.09						
			.0	-.16	5.84			
			36.0	-.16	.00			
101								
	1	-84.14						
			.0	.00	-.15			
			36.0	.00	.00			
	2	-19.45						
			.0	.00	-.01			
			36.0	.00	.00			
	3	-1.04						
			.0	-.16	5.83			
			36.0	-.16	.00			
23								
	1	-56.03						
			.0	.00	.03			
			24.0	.00	.07			
	2	.87						
			.0	.00	.07			
			24.0	.00	.09			
	3	-.09						
			.0	.26	21.27			
			24.0	.26	27.60			
24								
	1	-56.44						
			.0	.00	.07			
			24.0	.00	.10			
	2	.87						
			.0	.00	.09			
			24.0	.00	.09			
	3	-.09						

RITTENHOUSE ROAD BRIDGE AT QUEEN CREEK RIVER, TRANS. FRAME, Q100 FLOW

F R A M E E L E M E N T F O R C E S

ELT ID	LOAD COND	AXIAL FORCE	DIST ENDI	1-2 PLANE SHEAR	1-2 PLANE MOMENT	1-3 PLANE SHEAR	1-3 PLANE MOMENT	AXIAL TORQ
			.0	.09	27.60			
			24.0	.09	29.77			
25								
	1	-56.86						
			.0	.00	.10			
			24.0	.00	.10			
	2	.87						
			.0	.00	.09			
			24.0	.00	.09			
	3	-.09						
			.0	-.07	29.77			
			24.0	-.07	28.12			
26								
	1	-57.28						
			.0	.00	.10			
			24.0	.00	.09			
	2	.87						
			.0	.00	.09			
			24.0	.00	.07			
	3	-.09						
			.0	-.19	28.12			
			24.0	-.19	23.52			
27								
	1	-57.70						
			.0	.00	.09			
			24.0	.00	.07			
	2	.87						
			.0	.00	.07			
			24.0	.00	.05			
	3	-.09						
			.0	-.28	23.52			
			24.0	-.28	16.76			
28								
	1	-58.22						
			.0	.00	.07			
			36.0	.00	.03			
	2	.87						
			.0	.00	.05			
			36.0	.00	.02			
	3	-.09						
			.0	-.30	16.76			
			36.0	-.30	5.84			
32								
	1	-61.19						
			.0	.00	.06			
			24.0	.00	.14			
	2	-1.58						
			.0	.00	.03			
			24.0	.00	.00			
	3	-.13						
			.0	.26	21.27			
			24.0	.26	27.61			

RITTENHOUSE ROAD BRIDGE AT QUEEN CREEK RIVER, TRANS. FRAME, Q100 FLOW

F R A M E E L E M E N T F O R C E S

ELT ID	LOAD COND	AXIAL FORCE	DIST ENDI	1-2 PLANE SHEAR	1-2 PLANE MOMENT	1-3 PLANE SHEAR	1-3 PLANE MOMENT	AXIAL TORQ
33								
	1	-61.60						
			.0	.00	.14			
			24.0	.00	.18			
	2	-1.58						
			.0	.00	.00			
			24.0	.00	-.03			
	3	-.13						
			.0	.09	27.61			
			24.0	.09	29.78			
34								
	1	-62.02						
			.0	.00	.18			
			24.0	.00	.19			
	2	-1.58						
			.0	.00	-.03			
			24.0	.00	-.04			
	3	-.13						
			.0	-.07	29.78			
			24.0	-.07	28.13			
35								
	1	-62.44						
			.0	.00	.19			
			24.0	.00	.17			
	2	-1.58						
			.0	.00	-.04			
			24.0	.00	-.04			
	3	-.13						
			.0	-.19	28.13			
			24.0	-.19	23.53			
36								
	1	-62.86						
			.0	.00	.17			
			24.0	.00	.13			
	2	-1.58						
			.0	.00	-.04			
			24.0	.00	-.03			
	3	-.13						
			.0	-.28	23.53			
			24.0	-.28	16.77			
37								
	1	-63.38						
			.0	.00	.13			
			36.0	.00	.05			
	2	-1.58						
			.0	.00	-.03			
			36.0	.00	-.01			
	3	-.13						
			.0	-.30	16.77			
			36.0	-.30	5.84			
41								
	1	-57.63						

RITTENHOUSE ROAD BRIDGE AT QUEEN CREEK RIVER, TRANS. FRAME, Q100 FLOW

F R A M E E L E M E N T F O R C E S

ELT ID	LOAD COND	AXIAL FORCE	DIST ENDI	1-2 PLANE SHEAR	1-2 PLANE MOMENT	1-3 PLANE SHEAR	1-3 PLANE MOMENT	AXIAL TORQ
			.0	.00	-.08			
			24.0	.00	-.19			
	2	-12.14						
			.0	.00	-.03			
			24.0	.00	-.13			
	3	-.03						
			.0	.26	21.27			
			24.0	.26	27.61			
42								
	1	-58.04						
			.0	.00	-.19			
			24.0	.00	-.25			
	2	-12.14						
			.0	.00	-.13			
			24.0	.00	-.20			
	3	-.03						
			.0	.09	27.61			
			24.0	.09	29.78			
43								
	1	-58.46						
			.0	.00	-.25			
			24.0	.00	-.26			
	2	-12.14						
			.0	.00	-.20			
			24.0	.00	-.22			
	3	-.03						
			.0	-.07	29.78			
			24.0	-.07	28.13			
44								
	1	-58.88						
			.0	.00	-.26			
			24.0	.00	-.24			
	2	-12.14						
			.0	.00	-.22			
			24.0	.00	-.20			
	3	-.03						
			.0	-.19	28.13			
			24.0	-.19	23.52			
45								
	1	-59.30						
			.0	.00	-.24			
			24.0	.00	-.18			
	2	-12.14						
			.0	.00	-.20			
			24.0	.00	-.16			
	3	-.03						
			.0	-.28	23.52			
			24.0	-.28	16.76			
46								
	1	-59.82						
			.0	.00	-.18			
			36.0	.00	-.07			

RITTENHOUSE ROAD BRIDGE AT QUEEN CREEK RIVER, TRANS. FRAME, Q100 FLOW

F R A M E E L E M E N T F O R C E S

ELT ID	LOAD COND	AXIAL FORCE	DIST ENDI	1-2 PLANE SHEAR	1-2 PLANE MOMENT	1-3 PLANE SHEAR	1-3 PLANE MOMENT	AXIAL TORQ
	2	-12.14						
			.0	.00	-.16			
			36.0	.00	-.06			
	3	-.03						
			.0	-.30	16.76			
			36.0	-.30	5.84			
50								
	1	-60.99						
			.0	.01	.10			
			24.0	.01	.23			
	2	-19.06						
			.0	.00	.09			
			24.0	.00	.13			
	3	.00						
			.0	.26	21.27			
			24.0	.26	27.61			
51								
	1	-61.40						
			.0	.00	.23			
			24.0	.00	.30			
	2	-19.06						
			.0	.00	.13			
			24.0	.00	.15			
	3	.00						
			.0	.09	27.61			
			24.0	.09	29.78			
52								
	1	-61.82						
			.0	.00	.30			
			24.0	.00	.31			
	2	-19.06						
			.0	.00	.15			
			24.0	.00	.15			
	3	.00						
			.0	-.07	29.78			
			24.0	-.07	28.13			
53								
	1	-62.24						
			.0	.00	.31			
			24.0	.00	.28			
	2	-19.06						
			.0	.00	.15			
			24.0	.00	.13			
	3	.00						
			.0	-.19	28.13			
			24.0	-.19	23.52			
54								
	1	-62.66						
			.0	.00	.28			
			24.0	.00	.21			
	2	-19.06						
			.0	.00	.13			

RITTENHOUSE ROAD BRIDGE AT QUEEN CREEK RIVER, TRANS. FRAME, Q100 FLOW

F R A M E E L E M E N T F O R C E S

ELT ID	LOAD COND	AXIAL FORCE	DIST ENDI	1-2 PLANE SHEAR	1-2 PLANE MOMENT	1-3 PLANE SHEAR	1-3 PLANE MOMENT	AXIAL TORQ
			24.0	.00	.09			
	3	.00						
			.0	-.28	23.52			
			24.0	-.28	16.76			
55								
	1	-63.18						
			.0	.00	.21			
			36.0	.00	.08			
	2	-19.06						
			.0	.00	.09			
			36.0	.00	.03			
	3	.00						
			.0	-.30	16.76			
			36.0	-.30	5.84			
59								
	1	-60.99						
			.0	-.01	-.10			
			24.0	-.01	-.23			
	2	-20.31						
			.0	.00	.03			
			24.0	.00	.00			
	3	.00						
			.0	.26	21.27			
			24.0	.26	27.61			
60								
	1	-61.40						
			.0	.00	-.23			
			24.0	.00	-.30			
	2	-20.31						
			.0	.00	.00			
			24.0	.00	-.02			
	3	.00						
			.0	.09	27.61			
			24.0	.09	29.78			
61								
	1	-61.82						
			.0	.00	-.30			
			24.0	.00	-.31			
	2	-20.31						
			.0	.00	-.02			
			24.0	.00	-.03			
	3	.00						
			.0	-.07	29.78			
			24.0	-.07	28.13			
62								
	1	-62.24						
			.0	.00	-.31			
			24.0	.00	-.28			
	2	-20.31						
			.0	.00	-.03			
			24.0	.00	-.04			
	3	.00						

RITTENHOUSE ROAD BRIDGE AT QUEEN CREEK RIVER, TRANS. FRAME, Q100 FLOW

F R A M E E L E M E N T F O R C E S

ELT ID	LOAD COND	AXIAL FORCE	DIST ENDI	1-2 PLANE SHEAR	1-2 PLANE MOMENT	1-3 PLANE SHEAR	1-3 PLANE MOMENT	AXIAL TORQ
			.0	-.19	28.13			
			24.0	-.19	23.52			
63								
	1	-62.66						
			.0	.00	-.28			
			24.0	.00	-.21			
	2	-20.31						
			.0	.00	-.04			
			24.0	.00	-.03			
	3	.00						
			.0	-.28	23.52			
			24.0	-.28	16.76			
64								
	1	-63.18						
			.0	.00	-.21			
			36.0	.00	-.08			
	2	-20.31						
			.0	.00	-.03			
			36.0	.00	-.01			
	3	.00						
			.0	-.30	16.76			
			36.0	-.30	5.84			
68								
	1	-57.63						
			.0	.00	.08			
			24.0	.00	.19			
	2	-18.91						
			.0	.00	.10			
			24.0	.00	.17			
	3	.03						
			.0	.26	21.27			
			24.0	.26	27.61			
69								
	1	-58.04						
			.0	.00	.19			
			24.0	.00	.25			
	2	-18.91						
			.0	.00	.17			
			24.0	.00	.20			
	3	.03						
			.0	.09	27.61			
			24.0	.09	29.78			
70								
	1	-58.46						
			.0	.00	.25			
			24.0	.00	.26			
	2	-18.91						
			.0	.00	.20			
			24.0	.00	.19			
	3	.03						
			.0	-.07	29.78			
			24.0	-.07	28.13			

RITTENHOUSE ROAD BRIDGE AT QUEEN CREEK RIVER, TRANS. FRAME, Q100 FLOW

F R A M E E L E M E N T F O R C E S

ELT ID	LOAD COND	AXIAL FORCE	DIST ENDI	1-2 PLANE SHEAR	1-2 PLANE MOMENT	1-3 PLANE SHEAR	1-3 PLANE MOMENT	AXIAL TORQ
71								
	1	-58.88						
			.0	.00	.26			
			24.0	.00	.24			
	2	-18.91						
			.0	.00	.19			
			24.0	.00	.17			
	3	.03						
			.0	-.19	28.13			
			24.0	-.19	23.52			
72								
	1	-59.30						
			.0	.00	.24			
			24.0	.00	.18			
	2	-18.91						
			.0	.00	.17			
			24.0	.00	.12			
	3	.03						
			.0	-.28	23.52			
			24.0	-.28	16.76			
73								
	1	-59.82						
			.0	.00	.18			
			36.0	.00	.07			
	2	-18.91						
			.0	.00	.12			
			36.0	.00	.05			
	3	.03						
			.0	-.30	16.76			
			36.0	-.30	5.84			
77								
	1	-61.19						
			.0	.00	-.06			
			24.0	.00	-.14			
	2	-19.77						
			.0	.00	.05			
			24.0	.00	.05			
	3	.13						
			.0	.26	21.27			
			24.0	.26	27.61			
78								
	1	-61.60						
			.0	.00	-.14			
			24.0	.00	-.18			
	2	-19.77						
			.0	.00	.05			
			24.0	.00	.05			
	3	.13						
			.0	.09	27.61			
			24.0	.09	29.78			
79								
	1	-62.02						

RITTENHOUSE ROAD BRIDGE AT QUEEN CREEK RIVER, TRANS. FRAME, Q100 FLOW

F R A M E E L E M E N T F O R C E S

ELT ID	LOAD COND	AXIAL FORCE	DIST ENDI	1-2 PLANE SHEAR	1-2 PLANE MOMENT	1-3 PLANE SHEAR	1-3 PLANE MOMENT	AXIAL TORQ
			.0	.00	-.18			
			24.0	.00	-.19			
	2	-19.77						
			.0	.00	.05			
			24.0	.00	.04			
	3	.13						
			.0	-.07	29.78			
			24.0	-.07	28.13			
80								
	1	-62.44						
			.0	.00	-.19			
			24.0	.00	-.17			
	2	-19.77						
			.0	.00	.04			
			24.0	.00	.03			
	3	.13						
			.0	-.19	28.13			
			24.0	-.19	23.53			
81								
	1	-62.86						
			.0	.00	-.17			
			24.0	.00	-.13			
	2	-19.77						
			.0	.00	.03			
			24.0	.00	.02			
	3	.13						
			.0	-.28	23.53			
			24.0	-.28	16.77			
82								
	1	-63.38						
			.0	.00	-.13			
			36.0	.00	-.05			
	2	-19.77						
			.0	.00	.02			
			36.0	.00	.01			
	3	.13						
			.0	-.30	16.77			
			36.0	-.30	5.84			
86								
	1	-56.03						
			.0	.00	-.03			
			24.0	.00	-.07			
	2	-15.57						
			.0	.00	.09			
			24.0	.00	.13			
	3	.09						
			.0	.26	21.27			
			24.0	.26	27.60			
87								
	1	-56.44						
			.0	.00	-.07			
			24.0	.00	-.10			

RITTENHOUSE ROAD BRIDGE AT QUEEN CREEK RIVER, TRANS. FRAME, Q100 FLOW

F R A M E E L E M E N T F O R C E S

ELT ID	LOAD COND	AXIAL FORCE	DIST ENDI	1-2 PLANE SHEAR	1-2 PLANE MOMENT	1-3 PLANE SHEAR	1-3 PLANE MOMENT	AXIAL TORQ
	2	-15.57						
			.0	.00	.13			
			24.0	.00	.14			
	3	.09						
			.0	.09	27.60			
			24.0	.09	29.77			
88								
	1	-56.86						
			.0	.00	-.10			
			24.0	.00	-.10			
	2	-15.57						
			.0	.00	.14			
			24.0	.00	.14			
	3	.09						
			.0	-.07	29.77			
			24.0	-.07	28.12			
89								
	1	-57.28						
			.0	.00	-.10			
			24.0	.00	-.09			
	2	-15.57						
			.0	.00	.14			
			24.0	.00	.12			
	3	.09						
			.0	-.19	28.12			
			24.0	-.19	23.52			
90								
	1	-57.70						
			.0	.00	-.09			
			24.0	.00	-.07			
	2	-15.57						
			.0	.00	.12			
			24.0	.00	.09			
	3	.09						
			.0	-.28	23.52			
			24.0	-.28	16.76			
91								
	1	-58.22						
			.0	.00	-.07			
			36.0	.00	-.03			
	2	-15.57						
			.0	.00	.09			
			36.0	.00	.03			
	3	.09						
			.0	-.30	16.76			
			36.0	-.30	5.84			
95								
	1	-81.32						
			.0	-.01	-.18			
			24.0	-.01	-.41			
	2	-19.45						
			.0	.00	.04			

RITTENHOUSE ROAD BRIDGE AT QUEEN CREEK RIVER, TRANS. FRAME, Q100 FLOW

F R A M E E L E M E N T F O R C E S

ELT ID	LOAD COND	AXIAL FORCE	DIST ENDI	1-2 PLANE SHEAR	1-2 PLANE MOMENT	1-3 PLANE SHEAR	1-3 PLANE MOMENT	AXIAL TORQ
			24.0	.00	.02			
	3	-1.04						
			.0	.26	21.26			
			24.0	.26	27.58			
96								
	1	-81.74						
			.0	-.01	-.41			
			24.0	-.01	-.54			
	2	-19.45						
			.0	.00	.02			
			24.0	.00	.00			
	3	-1.04						
			.0	.09	27.58			
			24.0	.09	29.74			
97								
	1	-82.15						
			.0	.00	-.54			
			24.0	.00	-.57			
	2	-19.45						
			.0	.00	.00			
			24.0	.00	-.01			
	3	-1.04						
			.0	-.07	29.74			
			24.0	-.07	28.08			
98								
	1	-82.57						
			.0	.00	-.57			
			24.0	.00	-.51			
	2	-19.45						
			.0	.00	-.01			
			24.0	.00	-.01			
	3	-1.04						
			.0	-.19	28.08			
			24.0	-.19	23.48			
99								
	1	-82.99						
			.0	.01	-.51			
			24.0	.01	-.39			
	2	-19.45						
			.0	.00	-.01			
			24.0	.00	-.01			
	3	-1.04						
			.0	-.28	23.48			
			24.0	-.28	16.73			
100								
	1	-83.51						
			.0	.01	-.39			
			36.0	.01	-.15			
	2	-19.45						
			.0	.00	-.01			
			36.0	.00	-.01			
	3	-1.04						

RITTENHOUSE ROAD BRIDGE AT QUEEN CREEK RIVER, TRANS. FRAME, Q100 FLOW

F R A M E E L E M E N T F O R C E S

ELT ID	LOAD COND	AXIAL FORCE	DIST ENDI	1-2 PLANE SHEAR	1-2 PLANE MOMENT	1-3 PLANE SHEAR	1-3 PLANE MOMENT	AXIAL TORQ
			.0	-.30	16.73			
			36.0	-.30	5.83			

RITTENHOUSE RD BRIDGE AT QUEEN CREEK, LONG. FRAME, Q100 FLOW

F R A M E E L E M E N T F O R C E S

ELT ID	LOAD COND	AXIAL FORCE	DIST ENDI	1-2 PLANE SHEAR	1-2 PLANE MOMENT	1-3 PLANE SHEAR	1-3 PLANE MOMENT	AXIAL TORQ
1								
	1	.00						
			.0	.00	.00			
			64.8	.00	.00			
			82.4	.03	.59			
			103.2	.05	1.56			
2								
	1	.00						
			.0	.05	1.56			
			180.0	.05	9.93			
3								
	1	.00						
			.0	.05	9.93			
			24.0	.05	11.05			
4								
	1	.00						
			.0	-.01	11.05			
			24.0	-.01	10.92			
5								
	1	.00						
			.0	-.05	10.92			
			24.0	-.05	9.71			
6								
	1	.00						
			.0	-.08	9.71			
			24.0	-.08	7.73			
7								
	1	.00						
			.0	-.10	7.73			
			24.0	-.10	5.29			
8								
	1	.00						
			.0	-.10	5.29			
			36.0	-.10	1.73			
9								
	1	.00						
			.0	-.05	1.73			
			36.0	-.05	.00			

STRUCTURAL CALCULATIONS

FOR

HAWES ROAD BRIDGE

AT

QUEEN CREEK

Registered Professional Engineer (Structural)
CERTIFICATE NO.
14766
ROBERT DAVIS
TURTON
Date Signed 7/9/96
ARIZONA, U.S.A.

Cannon & Associates, Inc.
Consulting Engineers

project no. : CA 94046-1
project : Hawes Rd. Bridge
designed by : HM
checked by : GWS / TR
date : 5/96 sht. 1 of 21

BASIS OF ANALYSIS

DESIGN SPECIFICATION

American Association of State Highway and Transportation Officials Standard Specifications for Highway Bridges, 1992 Edition, revised to date.

EXISTING BRIDGE PLANS

As-built bridge plan sheets 1 thru 7 dated September 1991. Hawes Road bridge at Queen Creek Wash, Project No. 68268.

GEOTECHNICAL INVESTIGATION

Geotechnical Investigation Report by AGRA Earth & Environmental, Inc., Job No. E95-36, dated 4/15/96. Ultimate downward capacity of driven pile foundations were used with a safety factor of 1.0 under critical flow conditions.

HYDRAULIC DATA

Final Scour Analysis Report by Morrison-Maierle/CSSA, Inc. Dated March 1996.
Q_{500} = 5150 cfs, Average Velocity = 8.3 ft/sec., Angle of Attack = 5 degrres,
H.W. Elev. = 1384.36 (Bridge open to traffic)
Total Scour = 21'

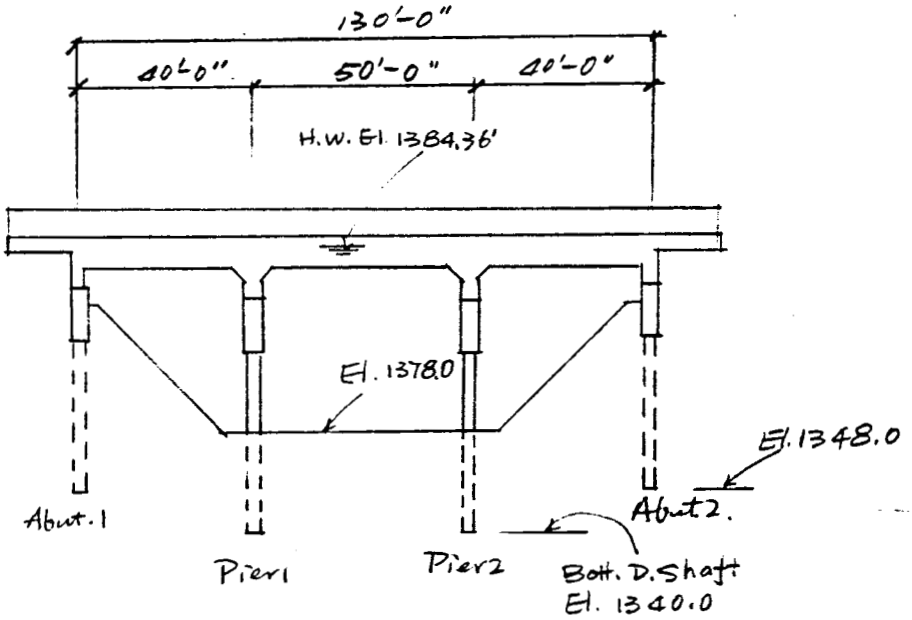

Section at Construction ℄

Three span continuous concrete slab bridge
23° skew

Cannon & Associates, Inc.
Consulting Engineers

project no. : CA 94046-1
project : Hawes Rd Bridge
designed by : HM
checked by : GWS
date : 5/96 sht. 3 of 21

Pier Analysis

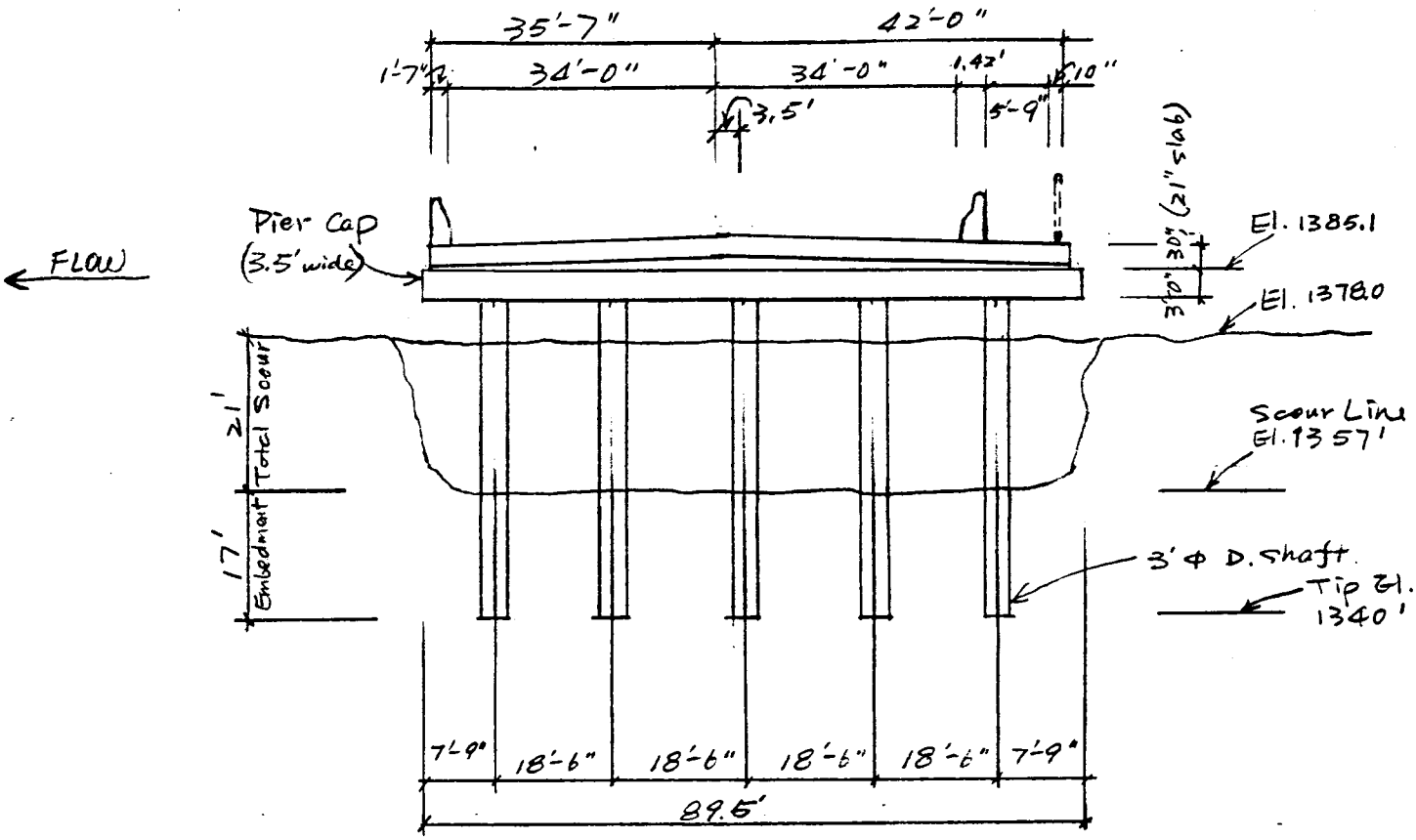

Pier Elevation

Pier Analysis (CONT.)

Dead Load Superstructure (Bridge Has No Wearing Surface)

slope factor

Deck : $(21''/12'')(77.6')(1.05)(0.15^{k/ft^3})$ = 21.4 k/'

Barrier = 0.7 k/ft

Chain Fence : 5#/84' = 0.06 k/'

Misc. = 0.04 k/'

22.2 k/'

Pier Loads (Per continuous beam analysis)

Dead Load

Max. Superstructure Reaction : = 1113 k

Pier Cap : $3'(3.5')(89.5')(0.15^{k/ft^3})$ = 141 k

Conc. Infill: (3" min, use 5" avg.) : $5''/12\,(3.5')(89.5')(0.15)$ = 19.6 k

Haunch (9") : $\left(\frac{10'+3.5'}{2}\right)(9''/12)(89.5')(0.15)$ = 68 k

$\Sigma = 1341.6^{k}$

Approx. Dead Load Per Pile : (To Scour Line)

$DL_{pile} = 1341.6/5 + \pi\left(\frac{3}{2}\right)^2(1385.1'-3'-1340')(0.15) = 313^{k/shaft}$

Live Load (HS20, 4 Lanes)

$LL = 67.1^{k}(4\ lanes)(0.75)/5\ shafts = 40\ k/shaft$

LL reduction factor

Check Capacity of Shafts : (Based on soil capacity)

Service Dead Load = 313 k/shaft

Service Live Load = 40 k/shaft

353 k/shaft.

Ultimate Shaft Capacity = 435 k/shaft > 353 k/shaft.

see sht. 7.

O.K.

∴ Check Lateral Stability.

Pier Analysis (CONT.)

check if shaft is flexible or not (soil: sand)

$$n_h = \left(\frac{280^{pci} - 0^{pci}}{17' - 0'}\right)(3') = 49.4 \quad \#$$

↑ slope of "k", see sht. 21 per AGRA chart. ($\Delta = \frac{1}{2}''$)

$$EI = \frac{0.4 E_c I_g}{1 + 0.0} = 1.19 \times 10^{11} \ \#\text{-in}^2$$

↑ β_d, use $\beta_d = 0.0$

$E_c = 3605$ ksi

$I_g = 82448$ in^4

$$\eta = \sqrt[5]{\frac{n_h}{EI}} = 0.0133$$

$$\eta L = 0.0133(17')(12''/') = 2.71 \quad > 2.0$$

∴ Consider Pile as flexible.

Pier Analysis (CONT.)

Project Hawes Road Bridge Job No. E95-36

FIGURE 7

ESTIMATED ULTIMATE DOWNWARD CAPACITY OF STRAIGHT, DRILLED, CAST-IN-PLACE CONCRETE PIERS

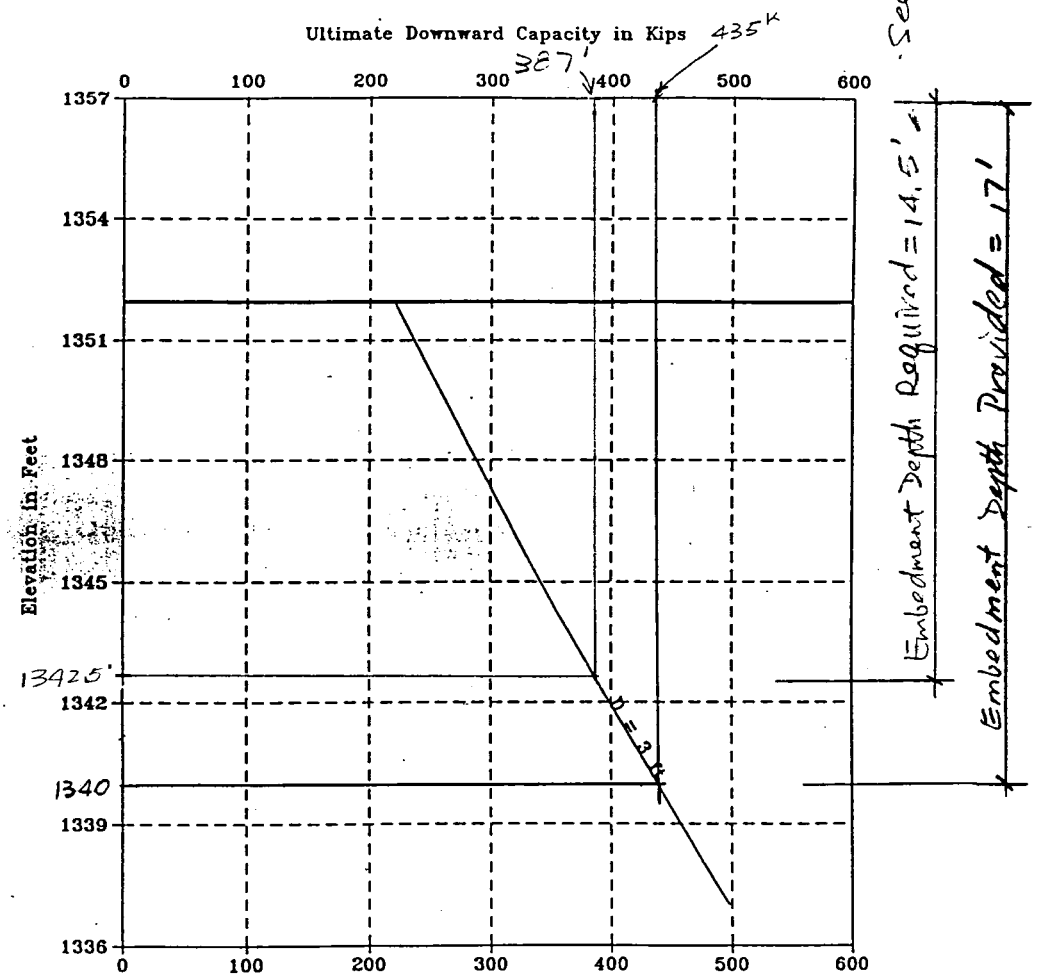

AGRA & Environmental, Inc.

B-7

Reference: Geotechnical Investigation Report by AGRA Earth & Environmental, Inc, Job No. E95-36, dated 4/15/96

Cannon & Associates, Inc.
Consulting Engineers

project no.: 94046-1
project: Hawes Rd Bridge
designed by: HM
checked by: GWS
date: 5/96 sht. 7 of 21

Pier Analysis (CONT.)

Pier Cap Superimposed Loads

Uniform Dead Load Deck width = 77.58'/cos 23° = 84.3'.
Use the pier cap length: 89.5' for uniform DL on Cap.

$(1113 + 19.6 + 68)/89.5 = 13.41\ ^{k}/_{'} = 1.12\ ^{k}/_{''}$

LL per wheel: HS20, 4 Lanes

$67.1^{k}/2 = 33.55\ ^{k}/\text{wheel}$, $(89.5' - 84.3')(\frac{1}{2}) = 2.6'$ @ ea. side.

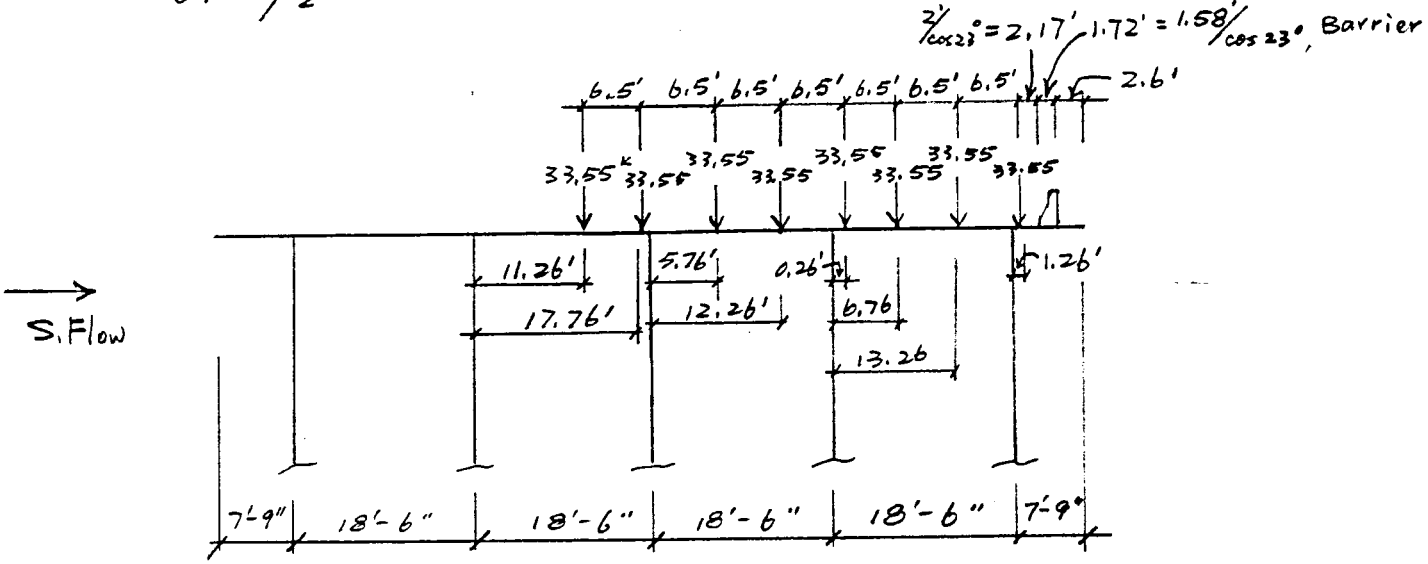

Pier Analysis (CONT.)

Lateral Analysis

Stream Flow Forces (Q 500 Flow Condition)

H.W. Elev. = 1384.36'
Avg. Velocity = 8.3 ft/sec
Angle of Attack = 5°. For analysis, use 10° (Attack ∡ + 5°).
Total Scour = 21',

Stream Flow Criteria

- Assume each D.shaft carries stream force individually. Use obstruction width based on projected area (3'+2'+2') with 2' of debris each side of projected area.
- Use K = 1.4 for shafts with debris.
- Assume debris extend from H.W. Elev. to exist. Grade.

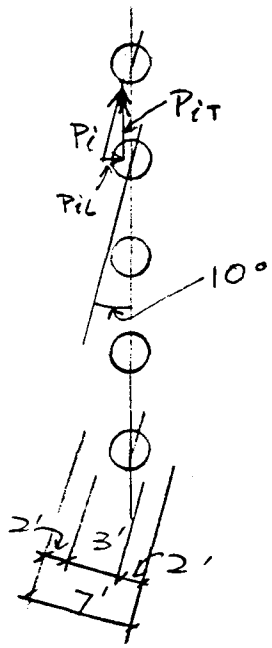

Projected Width: (D. shaft)
3'+2(2') = 7'

Projected width: (cap)
89.5(sin 10°) + (2')(2)
= 19.54'

Cannon & Associates, Inc.
Consulting Engineers

project no. : 94046-1
project : Hawes Rd Bridge
designed by : HM
checked by : GWS
date : 5/96 sht. 9 of 21

Pier Analysis (CONT.)

Stream Flow (CONT.)

$P_{max} = 2\,P_{avg.} = 2\,[1.4(8.3)^2]/1000 = 0.193\ k/ft^2$

$\Delta P = 0.193\ k/ft^2 / (1384.36 - 1378) = 0.03\ ksf/'$

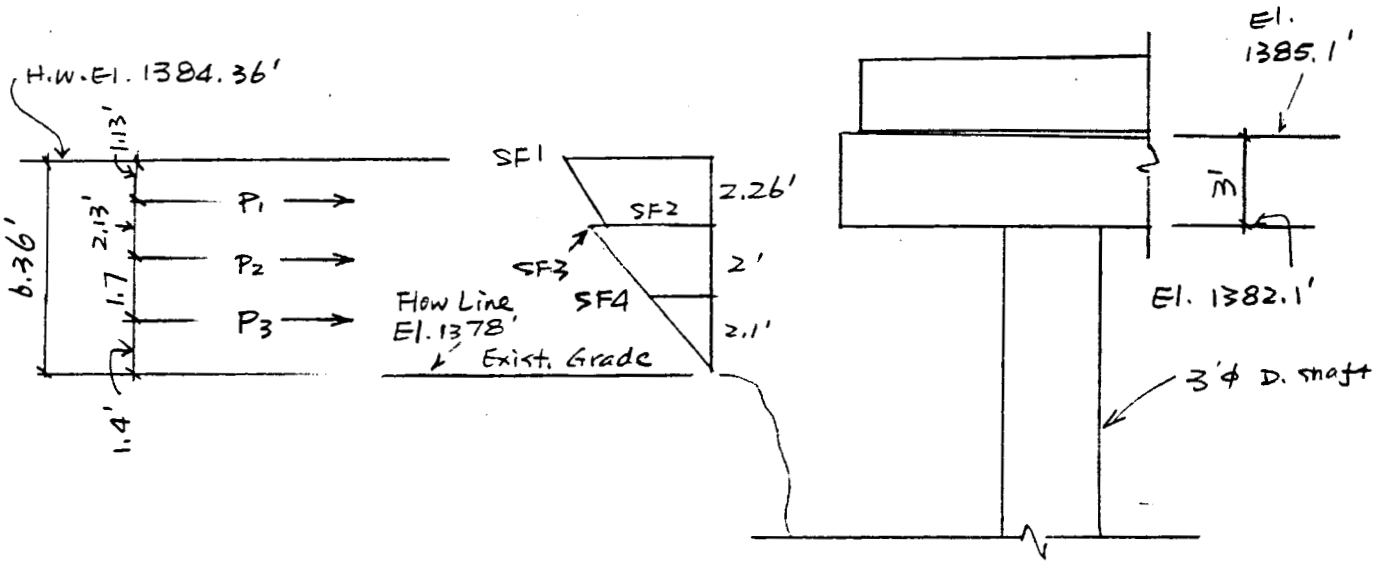

$SF1 = 0.193\ k/ft^2 (19.54')/5\ \text{shafts} = 0.75\ k/'$

$SF2 = [0.193 - 2.26(0.03\ ksf/')](19.54)/5 = 0.45$

$SF3 = [0.193 - 2.26(0.03)](7') = 0.88$

$SF4 = [0.193 - 4.26(0.03)](7') = 0.46$

Equivalent Concentrated Loads from Stream Force on Pier:

$P_1 = (0.75 + 0.45)(\tfrac{1}{2})(2.26') = 1.36^k$

$P_2 = (0.88 + 0.46)(\tfrac{1}{2})(2') = 1.34^k$

$P_3 = (0.46 + 0)(\tfrac{1}{2})(2.1') = 0.48^k$

Pier Analysis (CONT.)

Stream Flow (CONT.)

(Along w/ ℄ constrn.)

Resolve total forces into longitudinal and transverse directions and divide equally between each column.

P_{iT} = Transverse Direction : $P_i \cdot \cos 10° = 0.985 \cdot P_i$

P_{iL} = Longitudinal Direction : $P_i \sin 10° = 0.174 \cdot P_i$

$P_{1T} = 0.985(1.36) = 1.34^k$

$P_{2T} = 0.985(1.34) = 1.32^k$

$P_{3T} = 0.985(0.48) = 0.47^k$

$P_{1L} = 0.24^k$

$P_{2L} = 0.23^k$

$P_{3L} = 0.08^k$

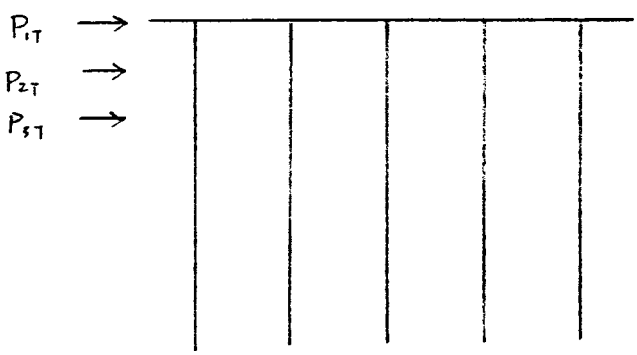

Transverse Model
(Loads per shaft)

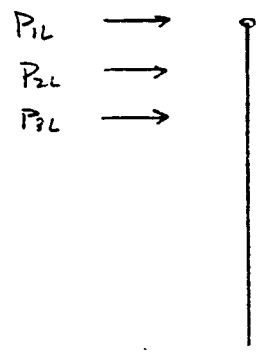

Longitudinal Model
(Loads per shaft)

See Computer Analysis for model and results.

Pier Analysis (CONT.)

Results from Transverse Frame Analysis

Top of Column:

Mem. 47: $P_{DL} = 259.82^k$, $P_{LL} = 30.55^k$, $P_{SF} = 4.96^k$

$M_{DL} = -2.2^{\prime-k}$, $M_{LL} = 35.25^{\prime-k}$, $M_{SF} = 55.57^{\prime-k}$

Mem. 27: $P_{DL} = 281.8^k$ $P_{LL} = 88.54^k$ $P_{SF} = 0$

$M_{DL} = 0$ $M_{LL} = 9.7^{\prime-k}$ $M_{SF} = -62.5^{\prime-k}$

Bott. of Shaft: (Point of Max. Moment)

Mem. 52 $P_{DL} = 292.34^k$, $P_{LL} = 30.55^k$, $P_{SF} = 4.96^k$

$M_{DL} = -0.22^k$ $M_{LL} = 2.51^{\prime-k}$, $M_{SF} = 28.53^{\prime-k}$

Mem. 42: $P_{DL} = 310.99^k$ $P_{LL} = 104.31^k$ $P_{SF} = -1.78^k$

$M_{DL} = 0.23^{\prime-k}$, $M_{LL} = -1.5^{\prime-k}$, $M_{SF} = 29.36^{\prime-k}$

Results From Longitudinal Frame Analysis

Top of Column: (Mem 1)

$P_{SF} = 0$. $M_{SF} = 0$

Bott. of shaft: (Mem 5)

$P_{SF} = 0$, $M_{SF} = 15.1^{\prime-k}$

Check Downward Capacity of Soil

LL reduction factor (4 Lanes)

$P_{TL} = 310.99 + 0.75(104.31) - 1.78 = 387^k$ (Mem. 42 control)

Ultimate Downward Capacity = $435^k > 387^k$ o.k.

(w/ Safty Factor = 1.0) ← See sht. 7 AGRA chart.

Shaft tip elevation: 1340'.

Embedment Depth Provided = 17'

Embedment Depth Required = 14.5' < 17', o.k.

↑ see sheet 7, AGRA chart

Pier Analysis (CONT.)

Check Capacity Based on Strength of Column & Shaft

Use AASHTO Group VII Loading + Live Load + Impact (No Earthquake)

$$1.3[\beta_D D + \beta_{L+I}(L+I) + \beta_E E + 1.0 B + 1.0 SF], \quad I = \frac{50}{50+125} = 0.29$$

($\beta_D \to 1.0$, $\beta_{L+I} \to 1.0$, $\beta_E \to 0$, $B \to 0$; Use 100% LL)

Top of Col.

Mem. 47:
- $P_u = 1.3[(259.82) + (1.29)(1.0)(30.55) + 4.96] = 395^k$
- $M_{u.tr.} = 1.3[-2.2 + (1.29)(1.0)(35.25) + (55.57)] = 128.5^{1-k}$
- $M_{u.long} = 1.3[0] = 0$

Mem. 27:
- $P_u = 1.3[(281.8) + (1.29)(1.0)(88.54) + 0] = 515^k$
- $M_{u.tr} = 1.3[0 + 1.29(1.0)(9.7) + (-62.5)] = 65.0^{1-k}$
- $M_{u.long} = 1.3[0] = 0$

Bott. of shaft

Mem. 52:
- $P_u = 1.3[(292.34) + (1.29)(1.0)(30.55) + 4.96] = 438^k$
- $M_{u.tr.} = 1.3[-0.22 + 1.29(1.0)(2.51) + (28.53)] = 41^{1-k}$
- $M_{u.long} = 1.3[15.1] = 19.6^{1-k}$

Mem. 42:
- $P_u = 1.3[310.99 + (1.29)(1.0)(104.31) + (-1.78)] = 577^k$
- $M_{u.tr.} = 1.3[0.23 + (1.29)(1.0)(-1.5) + 29.36] = 36^{1-k}$
- $M_{u.long} = 1.3[15.1] = 19.6^{1-k}$

Column Slenderness

Transver. Direction: $K = 1.2$, $\ell = 25.1'$, $r = 0.25(3')(12''/') = 9''$

$KL/r = 40.16 > 22$

$\therefore$ Moment must be magnifed.

Longi. Direction: $K = 2.1$ (cantilever)

$$\delta_s = \frac{1}{1 - \frac{\Sigma P_u}{\phi \Sigma P_c}} \geq 1.0, \quad P_c = \frac{\pi^2 E I}{(K \ell_u)^2}$$

Pier Analysis (CONT.)

Colu. Slendness (CONT.)

Use $I = 0.4 I_g$

$$P_{c.col.Tr.} = \frac{\pi^2(3605^{ksi})(32962^{in^4})}{[1.2(25.1' \times 12'')]^2} = 8968^k$$

$$P_{c.colu.Lo} = \frac{\pi^2(3605)(32962)}{[2.1(25.1 \times 12)]^2} = 2928^k$$

Mem. 47:

$$\delta_{s.col.Tr.} = \frac{1}{1 - \frac{395}{0.7(8968)}} = 1.07 \qquad \delta_{s.long} = \frac{1}{1 - \frac{395}{0.7(2928)}} = 1.24$$

Mem. 27:

$$\delta_{s.col.tr.} = \frac{1}{1 - \frac{515}{0.7(8968)}} = 1.09 \qquad \delta_{s.long} = \frac{1}{1 - \frac{515}{0.7(2928)}} = 1.34$$

$P_{c.shaft.Tr.} = 8968$, $P_{c.shaft.long} = 2928^k$

Mem. 52

$$\delta_{s.shaft.tr.} = \frac{1}{1 - \frac{438}{0.7(8968)}} = 1.08 \qquad \delta_{s.long} = \frac{1}{1 - \frac{438}{0.7(2928)}} = 1.27$$

Mem. 42.

$$\delta_{s.shaft.long.} = \frac{1}{1 - \frac{577}{0.7(8968)}} = 1.10 \qquad \delta_{s\ long} = \frac{1}{1 - \frac{577}{0.7(2928)}} = 1.39$$

Pier Analysis (CONT.)

Max. Col. & Shaft Loads

Mem 47: $P_u = 395^k$, $M_{u.tr.} = 128.5(1.07) = 137^{1-k}$, $M_{u\,long} = 0$

Mem. 27: $P_u = 515^k$, $M_{u.tr.} = 65(1.09) = 71^{1-k}$, $M_{u.long} = 0$

Mem. 52: $P_u = 438^k$, $M_{u.tr.} = 41(1.08) = 44^{1-k}$, $M_{u.long} = 1.27(19.6) = 25^{1-k}$

Mem. 42: $P_u = 577^k$, $M_{u.tr.} = 36(1.1) = 39.6^{1-k}$.
$M_{u.long} = 1.39(19.6) = 27^{1-k}$

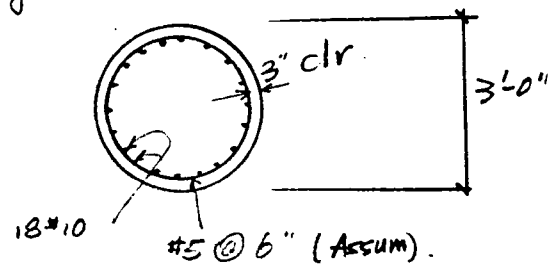

$f'_c = 4$ ksi, $f_y = 60$ ksi,

ULTIMATE STRENGTH DESIGN
OF
REINFORCED CONCRETE COLUMNS

```
CODER    :  HONG MEI
CHECKER  :
DATE     :   7- 2-96
JOB IDENTIFICATION :  HAWES RD BRIDGE, PIER COL. & SHAFT
DATA USED
**** ****
ANALYSIS OF ROUND COLUMN - SIZE : DIAMETER =  36.00 IN.
STRESSES : FC'      = 4.000 K.S.I.  FC = 3.400 K.S.I.  FY      = 60.000 K.S.I
           E-CONC. = 3605. K.S.I.                      E-STEEL = 29000. K.S.I
           MAX. CONC. STRAIN (EU) =  .003
CAPACITY REDUCTION FACTORS :
COMPRESSION =  .70     FLEXURE =  .90
REINFORCEMENT DATA :          CIRCULAR REINFORCEMENT PATTERN

WITH- 18 NO. 10 BARS   AST= 22.86 SQ.IN. =  2.25PCT.   COVER= 3.62 IN.
BAR SPACING =  4.80 IN.
OUTPUT
******
```

LOAD CASE	APPLIED LOADS AP	AMX	AMY	COMPUTED STRENGTH UP	UMX	UMY	UP/AP
1	395.	137.	0.	2319.	806.	0.	5.872
2	515.	71.	0.	2873.	396.	0.	5.579
3	438.	44.	25.	2942.	296.	168.	6.717
4	577.	40.	27.	3047.	211.	143.	5.281

$\}$ > 1.0 O.K

Pier Analysis (cont.)

Summary of Results

The Piers Are Vertically and Laterally Stable for Q_{500} Stream Flow Conditions.

COMPUTER ANALYSIS

Computer Models

Transverse Pier Frame Model

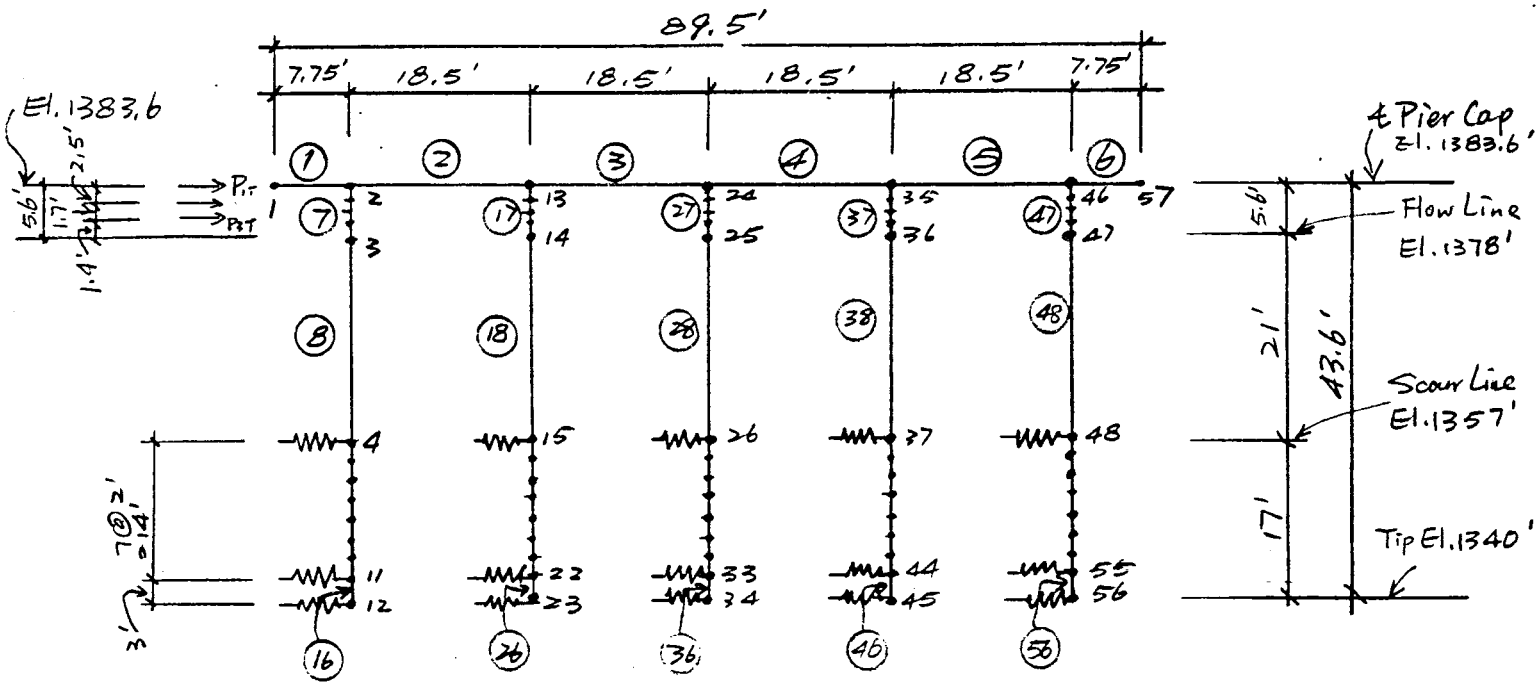

$I_{cap} = \frac{1}{12}(42)(36)^3 = 163296\ in^4$, $A_{cap} = 1512\ in^2$, $w = 0.131\ ^{k}/_{in}$, $E_{cap} = 3605$ ksi

$I_{col.\ \&\ shaft} = 1.0 I_g = 1.0\left[\frac{1}{64}\cdot\pi(36)^4\right] = 82448\ in^4$, $A_{col.} = 1018\ in^2$, $w = 0.088$, $E = 3605$ ksi

Use I_g for analysis.

Computer Models

Longitudinal Pier Frame Model (cantilever)

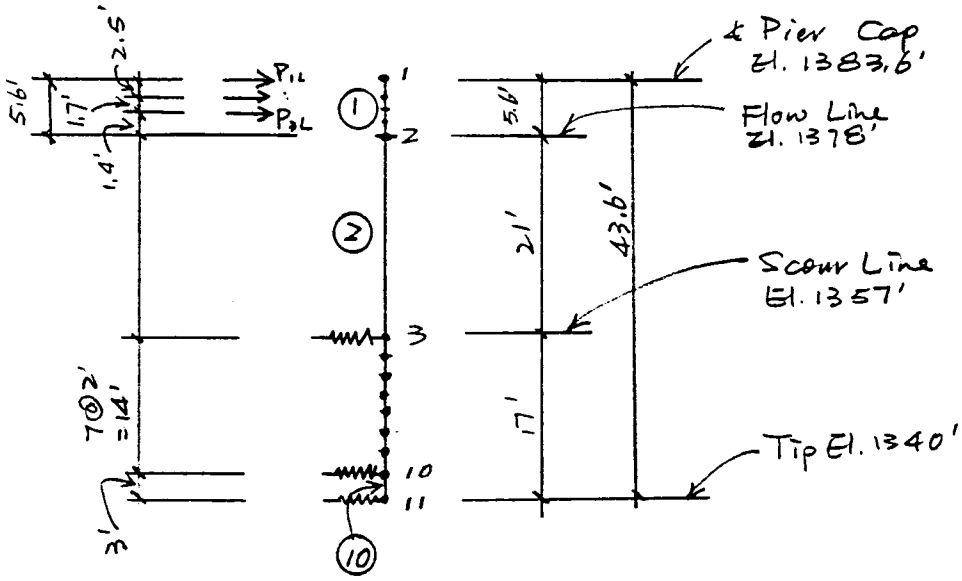

Cannon & Associates, Inc.
Consulting Engineers

project no. : 94046-1
project : Howes Rd Bridge
designed by : HM
checked by : TB
date : 5/96 sht. 19 of 21

Computer Models

Spring Constants

Based on lateral subgrade modulus (k) provided by AGRA charts (sht. 9)
spring constants = (k)(shaft ϕ)(Node spacing)
= k(36")(24")

½" Deflection Curve

Depth below Scour Line (ft)	Subgrade Modulus (pci)	Spring Constant K/in
0	0	0
2	40	34.6 K/"
4	80	69.1
6	125	108.0
8	165	142.6
10	193	166.8
12	221	190.9
14	249	268.9
17	291	188.6

Pier Analysis (cont.)

Figure 18 - Hawes Road
3-Foot Diameter

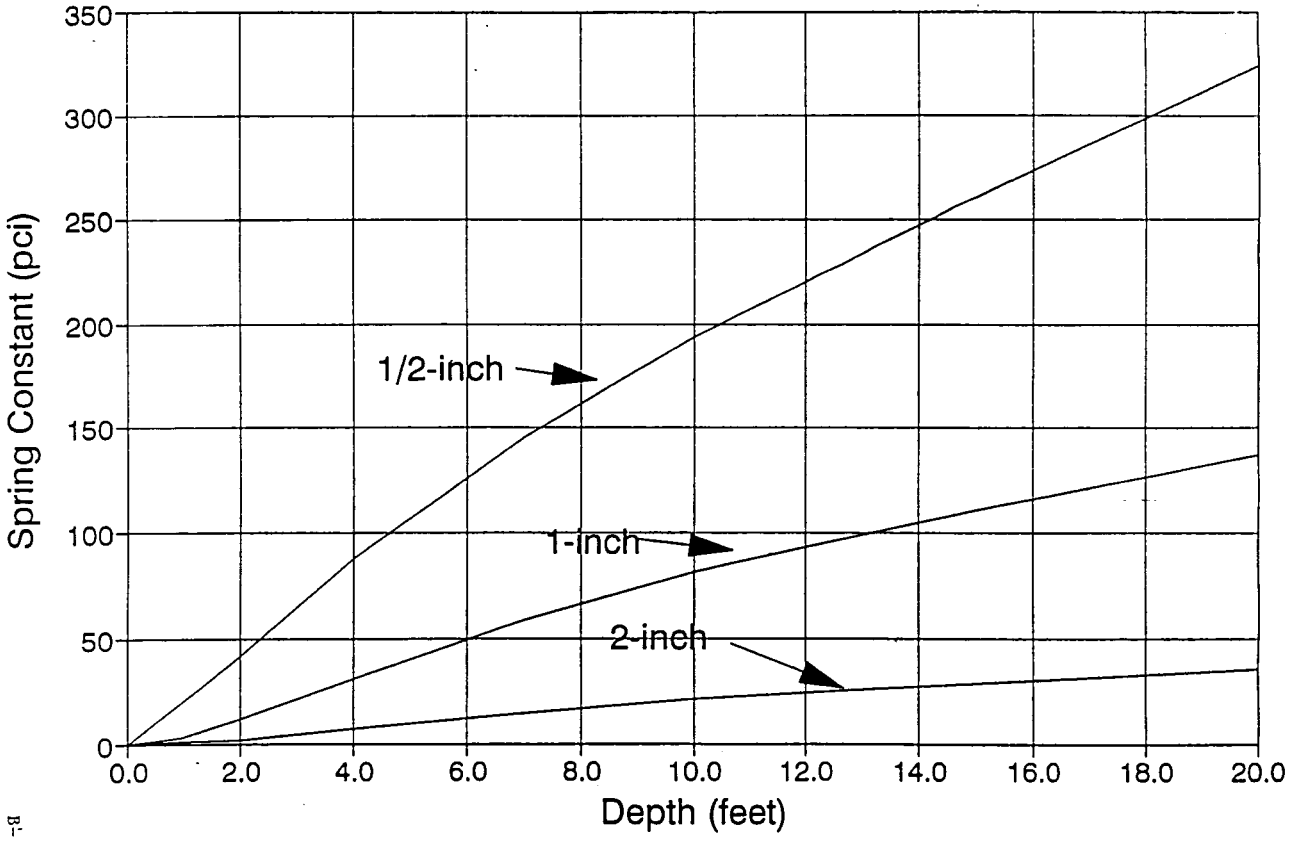

Reference: Geotechnical Investigation Report by AGRA Earth & Environmental, Inc., Job No. E95-36, dated 4/15/96.

HAWES ROAD BRIDGE AT QUEEN CREEK, TRANSVERSE FRAME, Q500 FLOW

F R A M E E L E M E N T F O R C E S

ELT ID	LOAD COND	AXIAL FORCE	DIST ENDI	1-2 PLANE SHEAR	1-2 PLANE MOMENT	1-3 PLANE SHEAR	1-3 PLANE MOMENT	AXIAL TORQ
1								
	1	.00						
			.0	.00	.00			
			93.0	-116.34	-5409.95			
	2	.00						
			.0	.00	.00			
			93.0	.00	.00			
	3	.00						
			.0	.00	.00			
			93.0	.00	.00			
2								
	1	.08						
			.0	140.52	-5383.83			
			112.3	.00	2508.09			
			222.0	-137.20	-5015.60			
	2	-.03						
			.0	-1.95	2.29			
			222.0	-1.95	-430.55			
	3	-.17						
			.0	-4.96	666.84			
			222.0	-4.96	-435.26			
3								
	1	-.01						
			.0	138.30	-5043.77			
			110.6	.00	2601.09			
			222.0	-139.42	-5167.71			
	2	-.61						
			.0	11.45	-615.50			
			135.1	11.45	931.22			
			213.2	-22.10	-794.58			
			222.0	-55.65	-1284.33			
	3	-.04						
			.0	-3.19	332.77			
			222.0	-3.19	-374.82			
4								
	1	-.01						
			.0	139.42	-5167.86			
			111.4	.00	2601.09			
			222.0	-138.30	-5043.61			
	2	-.98						
			.0	32.89	-1400.45			
			69.1	32.89	872.60			
			147.1	-.66	820.77			
			222.0	-34.21	-1741.21			
	3	.04						
			.0	-3.19	374.82			
			222.0	-3.19	-332.77			
5								
	1	.08						
			.0	137.20	-5015.75			
			109.7	.00	2508.09			
			222.0	-140.52	-5383.68			

HAWES ROAD BRIDGE AT QUEEN CREEK, TRANSVERSE FRAME, Q500 FLOW

F R A M E E L E M E N T F O R C E S

ELT ID	LOAD COND	AXIAL FORCE	DIST END1	1-2 PLANE SHEAR	1-2 PLANE MOMENT	1-3 PLANE SHEAR	1-3 PLANE MOMENT	AXIAL TORQ
	2	-1.21						
			.0	70.10	-1805.07			
			3.1	70.10	-1586.36			
			81.1	36.55	1264.35			
			159.1	3.00	1498.15			
			222.0	-30.55	-422.99			
	3	.17						
			.0	-4.96	435.26			
			222.0	-4.96	-666.84			
6								
	1	.00						
			.0	116.34	-5409.95			
			93.0	.00	.00			
	2	.00						
			.0	.00	.00			
			93.0	.00	.00			
	3	.00						
			.0	.00	.00			
			93.0	.00	.00			
7								
	1	-259.82						
			.0	.08	-26.12			
			67.2	.08	-20.97			
	2	1.95						
			.0	-.03	-2.29			
			67.2	-.03	-4.20			
	3	4.96						
			.0	1.17	-666.84			
			30.0	1.17	-631.66			
			50.4	2.49	-580.81			
			67.2	2.96	-531.04			
17								
	1	-278.46						
			.0	-.08	28.01			
			67.2	-.08	22.49			
	2	-13.40						
			.0	-.58	184.95			
			67.2	-.58	-146.11			
	3	-1.78						
			.0	1.47	-768.03			
			30.0	1.47	-723.95			
			50.4	2.79	-667.04			
			67.2	3.26	-612.28			
27								
	1	-281.80						
			.0	.00	.00			
			67.2	.00	.00			
	2	-88.54						
			.0	-.38	116.12			
			67.2	-.38	90.85			
	3	.00						
			.0	1.42	-749.64			

HAWES ROAD BRIDGE AT QUEEN CREEK, TRANSVERSE FRAME, Q500 FLOW

F R A M E E L E M E N T F O R C E S

ELT ID	LOAD COND	AXIAL FORCE	DIST END1	1-2 PLANE SHEAR	1-2 PLANE MOMENT	1-3 PLANE SHEAR	1-3 PLANE MOMENT	AXIAL TORQ
			30.0	1.42	-707.17			
			50.4	2.74	-651.37			
			67.2	3.21	-597.51			
37								
	1	-278.46						
			.0	.08	-28.01			
			67.2	.08	-22.49			
	2	-104.31						
			.0	-.22	63.86			
			67.2	-.22	48.88			
	3	1.78						
			.0	1.47	-768.03			
			30.0	1.47	-723.95			
			50.4	2.79	-667.04			
			67.2	3.26	-612.28			
47								
	1	-259.82						
			.0	-.08	26.12			
			67.2	-.08	20.97			
	2	-30.55						
			.0	1.21	-422.99			
			67.2	1.21	-341.99			
	3	-4.96						
			.0	1.17	-666.84			
			30.0	1.17	-631.66			
			50.4	2.49	-580.81			
			67.2	2.96	-531.04			
8								
	1	-273.86						
			.0	.08	-20.97			
			252.0	.08	-1.66			
	2	1.95						
			.0	-.03	-4.20			
			252.0	-.03	-11.36			
	3	4.96						
			.0	2.96	-531.04			
			252.0	2.96	215.55			
18								
	1	-292.51						
			.0	-.08	22.49			
			252.0	-.08	1.77			
	2	-13.40						
			.0	-.58	146.11			
			252.0	-.58	.49			
	3	-1.78						
			.0	3.26	-612.28			
			252.0	3.26	209.13			
28								
	1	-295.84						
			.0	.00	.00			
			252.0	.00	.00			
	2	-88.54						

HAWES ROAD BRIDGE AT QUEEN CREEK, TRANSVERSE FRAME, Q500 FLOW

F R A M E E L E M E N T F O R C E S

ELT ID	LOAD COND	AXIAL FORCE	DIST END1	1-2 PLANE SHEAR	1-2 PLANE MOMENT	1-3 PLANE SHEAR	1-3 PLANE MOMENT	AXIAL TORQ
			.0	-.38	90.85			
			252.0	-.38	-3.92			
	3	.00						
			.0	3.21	-597.51			
			252.0	3.21	210.29			
38								
	1	-292.51						
			.0	.08	-22.49			
			252.0	.08	-1.77			
	2	-104.31						
			.0	-.22	48.88			
			252.0	-.22	-7.31			
	3	1.78						
			.0	3.26	-612.28			
			252.0	3.26	209.13			
48								
	1	-273.86						
			.0	-.08	20.97			
			252.0	-.08	1.66			
	2	-30.55						
			.0	1.21	-341.99			
			252.0	1.21	-38.24			
	3	-4.96						
			.0	2.96	-531.04			
			252.0	2.96	215.55			
9								
	1	-286.01						
			.0	.08	-1.66			
			24.0	.08	.18			
	2	1.95						
			.0	-.03	-11.36			
			24.0	-.03	-12.05			
	3	4.96						
			.0	2.96	215.55			
			24.0	2.96	286.66			
10								
	1	-288.12						
			.0	.06	.18			
			24.0	.06	1.66			
	2	1.95						
			.0	.00	-12.05			
			24.0	.00	-12.13			
	3	4.96						
			.0	1.94	286.66			
			24.0	1.94	333.13			
11								
	1	-290.23						
			.0	.04	1.66			
			24.0	.04	2.58			
	2	1.95						
			.0	.03	-12.13			
			24.0	.03	-11.34			

HAWES ROAD BRIDGE AT QUEEN CREEK, TRANSVERSE FRAME, Q500 FLOW

F R A M E E L E M E N T F O R C E S

ELT ID	LOAD COND	AXIAL FORCE	DIST END1	1-2 PLANE SHEAR	1-2 PLANE MOMENT	1-3 PLANE SHEAR	1-3 PLANE MOMENT	AXIAL TORQ
	3	4.96						
			.0	.39	333.13			
			24.0	.39	342.39			
12								
	1	-292.34						
			.0	.01	2.58			
			24.0	.01	2.85			
	2	1.95						
			.0	.07	-11.34			
			24.0	.07	-9.64			
	3	4.96						
			.0	-1.33	342.39			
			24.0	-1.33	310.53			
13								
	1	-294.46						
			.0	-.01	2.85			
			24.0	-.01	2.51			
	2	1.95						
			.0	.10	-9.64			
			24.0	.10	-7.25			
	3	4.96						
			.0	-2.74	310.53			
			24.0	-2.74	244.68			
14								
	1	-296.57						
			.0	-.03	2.51			
			24.0	-.03	1.78			
	2	1.95						
			.0	.11	-7.25			
			24.0	.11	-4.58			
	3	4.96						
			.0	-3.51	244.68			
			24.0	-3.51	160.46			
15								
	1	-298.68						
			.0	-.04	1.78			
			24.0	-.04	.92			
	2	1.95						
			.0	.10	-4.58			
			24.0	.10	-2.14			
	3	4.96						
			.0	-3.46	160.46			
			24.0	-3.46	77.52			
16								
	1	-301.32						
			.0	-.03	.92			
			36.0	-.03	.00			
	2	1.95						
			.0	.06	-2.14			
			36.0	.06	.00			
	3	4.96						
			.0	-2.15	77.52			

HAWES ROAD BRIDGE AT QUEEN CREEK, TRANSVERSE FRAME, Q500 FLOW

F R A M E E L E M E N T F O R C E S

ELT ID	LOAD COND	AXIAL FORCE	DIST END1	1-2 PLANE SHEAR	1-2 PLANE MOMENT	1-3 PLANE SHEAR	1-3 PLANE MOMENT	AXIAL TORQ
			36.0	-2.15	.00			
26								
	1	-319.96						
			.0	.03	-.99			
			36.0	.03	.00			
	2	-13.40						
			.0	.24	-8.75			
			36.0	.24	.00			
	3	-1.78						
			.0	-2.25	81.09			
			36.0	-2.25	.00			
36								
	1	-323.30						
			.0	.00	.00			
			36.0	.00	.00			
	2	-88.54						
			.0	.18	-6.33			
			36.0	.18	.00			
	3	.00						
			.0	-2.23	80.44			
			36.0	-2.23	.00			
46								
	1	-319.96						
			.0	-.03	.99			
			36.0	-.03	.00			
	2	-104.31						
			.0	.12	-4.50			
			36.0	.12	.00			
	3	1.78						
			.0	-2.25	81.09			
			36.0	-2.25	.00			
56								
	1	-301.32						
			.0	.03	-.92			
			36.0	.03	.00			
	2	-30.55						
			.0	-.35	12.66			
			36.0	-.35	.00			
	3	-4.96						
			.0	-2.15	77.52			
			36.0	-2.15	.00			
19								
	1	-304.65						
			.0	-.08	1.77			
			24.0	-.08	-.20			
	2	-13.40						
			.0	-.58	.49			
			24.0	-.58	-13.38			
	3	-1.78						
			.0	3.26	209.13			
			24.0	3.26	287.36			

HAWES ROAD BRIDGE AT QUEEN CREEK, TRANSVERSE FRAME, Q500 FLOW

F R A M E E L E M E N T F O R C E S

ELT ID	LOAD COND	AXIAL FORCE	DIST END1	1-2 PLANE SHEAR	1-2 PLANE MOMENT	1-3 PLANE SHEAR	1-3 PLANE MOMENT	AXIAL TORQ
20								
	1	-306.76						
			.0	-.07	-.20			
			24.0	-.07	-1.79			
	2	-13.40						
			.0	-.45	-13.38			
			24.0	-.45	-24.10			
	3	-1.78						
			.0	2.18	287.36			
			24.0	2.18	339.58			
21								
	1	-308.87						
			.0	-.04	-1.79			
			24.0	-.04	-2.78			
	2	-13.40						
			.0	-.24	-24.10			
			24.0	-.24	-29.91			
	3	-1.78						
			.0	.53	339.58			
			24.0	.53	352.41			
22								
	1	-310.99						
			.0	-.01	-2.78			
			24.0	-.01	-3.06			
	2	-13.40						
			.0	-.01	-29.91			
			24.0	-.01	-30.08			
	3	-1.78						
			.0	-1.29	352.41			
			24.0	-1.29	321.56			
23								
	1	-313.10						
			.0	.01	-3.06			
			24.0	.01	-2.70			
	2	-13.40						
			.0	.20	-30.08			
			24.0	.20	-25.29			
	3	-1.78						
			.0	-2.80	321.56			
			24.0	-2.80	254.42			
24								
	1	-315.21						
			.0	.03	-2.70			
			24.0	.03	-1.91			
	2	-13.40						
			.0	.33	-25.29			
			24.0	.33	-17.37			
	3	-1.78						
			.0	-3.63	254.42			
			24.0	-3.63	167.36			
25								
	1	-317.32						

HAWES ROAD BRIDGE AT QUEEN CREEK, TRANSVERSE FRAME, Q500 FLOW

F R A M E E L E M E N T F O R C E S

ELT ID	LOAD COND	AXIAL FORCE	DIST ENDI	1-2 PLANE SHEAR	1-2 PLANE MOMENT	1-3 PLANE SHEAR	1-3 PLANE MOMENT	AXIAL TORQ
			.0	.04	-1.91			
			24.0	.04	-.99			
	2	-13.40						
			.0	.36	-17.37			
			24.0	.36	-8.75			
	3	-1.78						
			.0	-3.59	167.36			
			24.0	-3.59	81.09			
29								
	1	-307.99						
			.0	.00	.00			
			24.0	.00	.00			
	2	-88.54						
			.0	-.38	-3.92			
			24.0	-.38	-12.95			
	3	.00						
			.0	3.21	210.29			
			24.0	3.21	287.23			
30								
	1	-310.10						
			.0	.00	.00			
			24.0	.00	.00			
	2	-88.54						
			.0	-.28	-12.95			
			24.0	-.28	-19.76			
	3	.00						
			.0	2.13	287.23			
			24.0	2.13	338.41			
31								
	1	-312.21						
			.0	.00	.00			
			24.0	.00	.00			
	2	-88.54						
			.0	-.14	-19.76			
			24.0	-.14	-23.14			
	3	.00						
			.0	.51	338.41			
			24.0	.51	350.58			
32								
	1	-314.32						
			.0	.00	.00			
			24.0	.00	.00			
	2	-88.54						
			.0	.02	-23.14			
			24.0	.02	-22.61			
	3	.00						
			.0	-1.29	350.58			
			24.0	-1.29	319.55			
33								
	1	-316.43						
			.0	.00	.00			
			24.0	.00	.00			

HAWES ROAD BRIDGE AT QUEEN CREEK, TRANSVERSE FRAME, Q500 FLOW

F R A M E E L E M E N T F O R C E S

ELT ID	LOAD COND	AXIAL FORCE	DIST ENDI	1-2 PLANE SHEAR	1-2 PLANE MOMENT	1-3 PLANE SHEAR	1-3 PLANE MOMENT	AXIAL TORQ
	2	-88.54						
			.0	.16	-22.61			
			24.0	.16	-18.69			
	3	.00						
			.0	-2.79	319.55			
			24.0	-2.79	252.64			
34								
	1	-318.55						
			.0	.00	.00			
			24.0	.00	.00			
	2	-88.54						
			.0	.25	-18.69			
			24.0	.25	-12.69			
	3	.00						
			.0	-3.61	252.64			
			24.0	-3.61	166.11			
35								
	1	-320.66						
			.0	.00	.00			
			24.0	.00	.00			
	2	-88.54						
			.0	.27	-12.69			
			24.0	.27	-6.33			
	3	.00						
			.0	-3.57	166.11			
			24.0	-3.57	80.44			
39								
	1	-304.65						
			.0	.08	-1.77			
			24.0	.08	.20			
	2	-104.31						
			.0	-.22	-7.31			
			24.0	-.22	-12.66			
	3	1.78						
			.0	3.26	209.13			
			24.0	3.26	287.36			
40								
	1	-306.76						
			.0	.07	.20			
			24.0	.07	1.79			
	2	-104.31						
			.0	-.16	-12.66			
			24.0	-.16	-16.51			
	3	1.78						
			.0	2.18	287.36			
			24.0	2.18	339.58			
41								
	1	-308.87						
			.0	.04	1.79			
			24.0	.04	2.78			
	2	-104.31						
			.0	-.06	-16.51			

HAWES ROAD BRIDGE AT QUEEN CREEK, TRANSVERSE FRAME, Q500 FLOW

F R A M E E L E M E N T F O R C E S

ELT ID	LOAD COND	AXIAL FORCE	DIST ENDI	1-2 PLANE SHEAR	1-2 PLANE MOMENT	1-3 PLANE SHEAR	1-3 PLANE MOMENT	AXIAL TORQ
			24.0	-.06	-18.04			
	3	1.78						
			.0	.53	339.58			
			24.0	.53	352.41			
42								
	1	-310.99						
			.0	.01	2.78			
			24.0	.01	3.06			
	2	-104.31						
			.0	.04	-18.04			
			24.0	.04	-16.98			
	3	1.78						
			.0	-1.29	352.41			
			24.0	-1.29	321.56			
43								
	1	-313.10						
			.0	-.01	3.06			
			24.0	-.01	2.70			
	2	-104.31						
			.0	.14	-16.98			
			24.0	.14	-13.71			
	3	1.78						
			.0	-2.80	321.56			
			24.0	-2.80	254.42			
44								
	1	-315.21						
			.0	-.03	2.70			
			24.0	-.03	1.91			
	2	-104.31						
			.0	.19	-13.71			
			24.0	.19	-9.16			
	3	1.78						
			.0	-3.63	254.42			
			24.0	-3.63	167.36			
45								
	1	-317.32						
			.0	-.04	1.91			
			24.0	-.04	.99			
	2	-104.31						
			.0	.19	-9.16			
			24.0	.19	-4.50			
	3	1.78						
			.0	-3.59	167.36			
			24.0	-3.59	81.09			
49								
	1	-286.01						
			.0	-.08	1.66			
			24.0	-.08	-.18			
	2	-30.55						
			.0	1.21	-38.24			
			24.0	1.21	-9.31			
	3	-4.96						

HAWES ROAD BRIDGE AT QUEEN CREEK, TRANSVERSE FRAME, Q500 FLOW

F R A M E E L E M E N T F O R C E S

ELT ID	LOAD COND	AXIAL FORCE	DIST ENDI	1-2 PLANE SHEAR	1-2 PLANE MOMENT	1-3 PLANE SHEAR	1-3 PLANE MOMENT	AXIAL TORQ
			.0	2.96	215.55			
			24.0	2.96	286.66			
50								
	1	-288.12						
			.0	-.06	-.18			
			24.0	-.06	-1.66			
	2	-30.55						
			.0	.99	-9.31			
			24.0	.99	14.50			
	3	-4.96						
			.0	1.94	286.66			
			24.0	1.94	333.13			
51								
	1	-290.23						
			.0	-.04	-1.66			
			24.0	-.04	-2.58			
	2	-30.55						
			.0	.65	14.50			
			24.0	.65	30.13			
	3	-4.96						
			.0	.39	333.13			
			24.0	.39	342.39			
52								
	1	-292.34						
			.0	-.01	-2.58			
			24.0	-.01	-2.85			
	2	-30.55						
			.0	.25	30.13			
			24.0	.25	36.06			
	3	-4.96						
			.0	-1.33	342.39			
			24.0	-1.33	310.53			
53								
	1	-294.46						
			.0	.01	-2.85			
			24.0	.01	-2.51			
	2	-30.55						
			.0	-.12	36.06			
			24.0	-.12	33.10			
	3	-4.96						
			.0	-2.74	310.53			
			24.0	-2.74	244.68			
54								
	1	-296.57						
			.0	.03	-2.51			
			24.0	.03	-1.78			
	2	-30.55						
			.0	-.38	33.10			
			24.0	-.38	24.05			
	3	-4.96						
			.0	-3.51	244.68			
			24.0	-3.51	160.46			

HAWES ROAD BRIDGE AT QUEEN CREEK, TRANSVERSE FRAME, Q500 FLOW

F R A M E E L E M E N T F O R C E S

ELT ID	LOAD COND	AXIAL FORCE	DIST ENDI	1-2 PLANE SHEAR	1-2 PLANE MOMENT	1-3 PLANE SHEAR	1-3 PLANE MOMENT	AXIAL TORQ
55								
	1	-298.68						
			.0	.04	-1.78			
			24.0	.04	-.92			
	2	-30.55						
			.0	-.47	24.05			
			24.0	-.47	12.66			
	3	-4.96						
			.0	-3.46	160.46			
			24.0	-3.46	77.52			

HAWES ROAD BRIDGE AT QUEEN CREEK, LONG. FRAME, Q500 FLOW

F R A M E E L E M E N T F O R C E S

ELT ID	LOAD COND	AXIAL FORCE	DIST ENDI	1-2 PLANE SHEAR	1-2 PLANE MOMENT	1-3 PLANE SHEAR	1-3 PLANE MOMENT	AXIAL TORQ
1								
	1	.00						
			.0	.24	.00			
			30.0	.24	7.20			
			50.4	.47	16.79			
			67.2	.55	26.03			
2								
	1	.00						
			.0	.55	26.03			
			252.0	.55	164.63			
3								
	1	.00						
			.0	.55	164.63			
			24.0	.55	177.83			
4								
	1	.00						
			.0	.16	177.83			
			24.0	.16	181.60			
5								
	1	.00						
			.0	-.42	181.60			
			24.0	-.42	171.58			
6								
	1	.00						
			.0	-1.03	171.58			
			24.0	-1.03	146.97			
7								
	1	.00						
			.0	-1.49	146.97			
			24.0	-1.49	111.17			
8								
	1	.00						
			.0	-1.69	111.17			
			24.0	-1.69	70.58			
9								
	1	.00						
			.0	-1.56	70.58			
			24.0	-1.56	33.07			
10								
	1	.00						
			.0	-.92	33.07			
			36.0	-.92	.00			

STRUCTURAL CALCULATIONS

FOR

POWER ROAD OVER

QUEEN CREEK

Registered Professional Engineer (Structural)
CERTIFICATE NO.
14766
ROBERT DAVIS
TURTON
Date Signed 7/9/96
ARIZONA, U.S.A.

Cannon & Associates, Inc.
Consulting Engineers

project no. : CA 94046-1
project : POWER RD. OVER QUEEN CRK
designed by : JB
checked by : HM
date : 5/96 sht. 1 of 19

BASIS OF ANALYSIS

DESIGN SPECIFICATION

American Association of State Highway and Transportation Officials Standard Specifications for Highway Bridges, 1992 Edition, revised to date.

EXISTING BRIDGE PLANS

Power Road & Queen Creek Bridge Project No. 56-C-8.

GEOTECHNICAL INVESTIGATION

Geotechnical Investigation Report by AGRA Earth & Environmental, Inc., Job No. E95-36, dated 4/15/96. Ultimate downward capacity of driven pile foundations were used with a safety factor of 1.0 under critical flow conditions.

HYDRAULIC DATA

Final Scour Analysis Report by Morrison-Maierle/CSSA, Inc. Dated March 1996.
Q_{100} = 3,010 cfs, Average Velocity = 7.8 ft/sec., Angle of Attack = 0 degrees.
HW Elev. = 1350.08 (Bridge open to traffic)
Total Scour = 15'

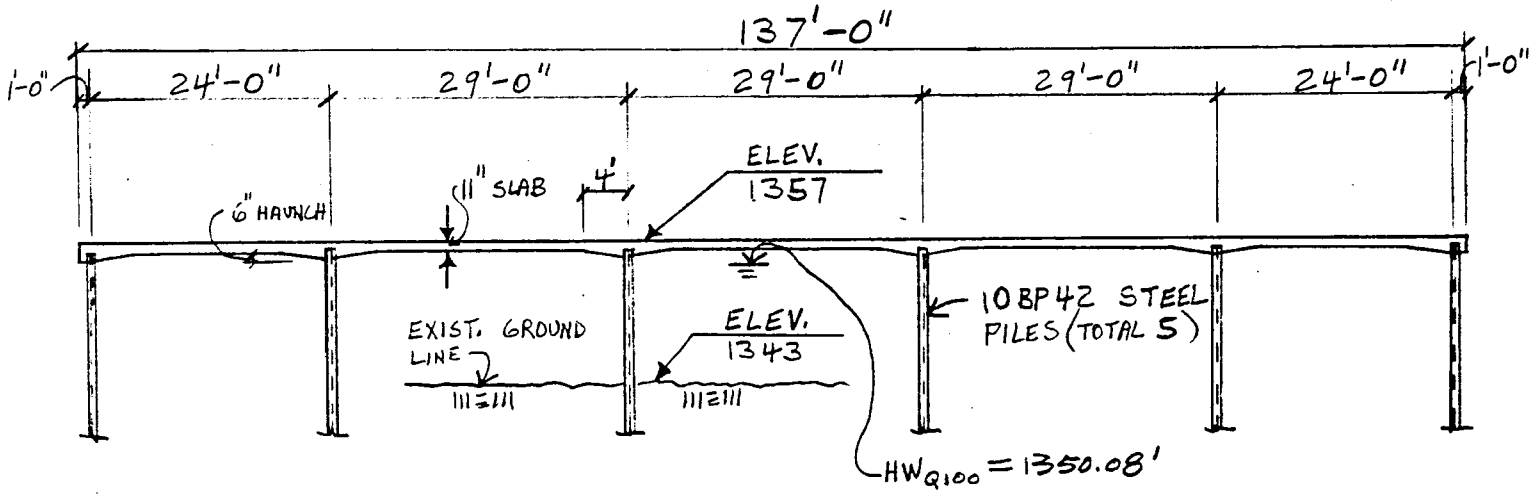

SECTION @ CONST. ℄

FIVE SPAN CONTINUOUS CONCRETE SLAB BRIDGE

Cannon & Associates, Inc.
Consulting Engineers

project no. : CA 94046-1
project : POWER RD. OVER QUEEN CRK
designed by : JB
checked by : HM
date : 5/96 sht. 3 of 19

PIER ANALYSIS (Q_{100})

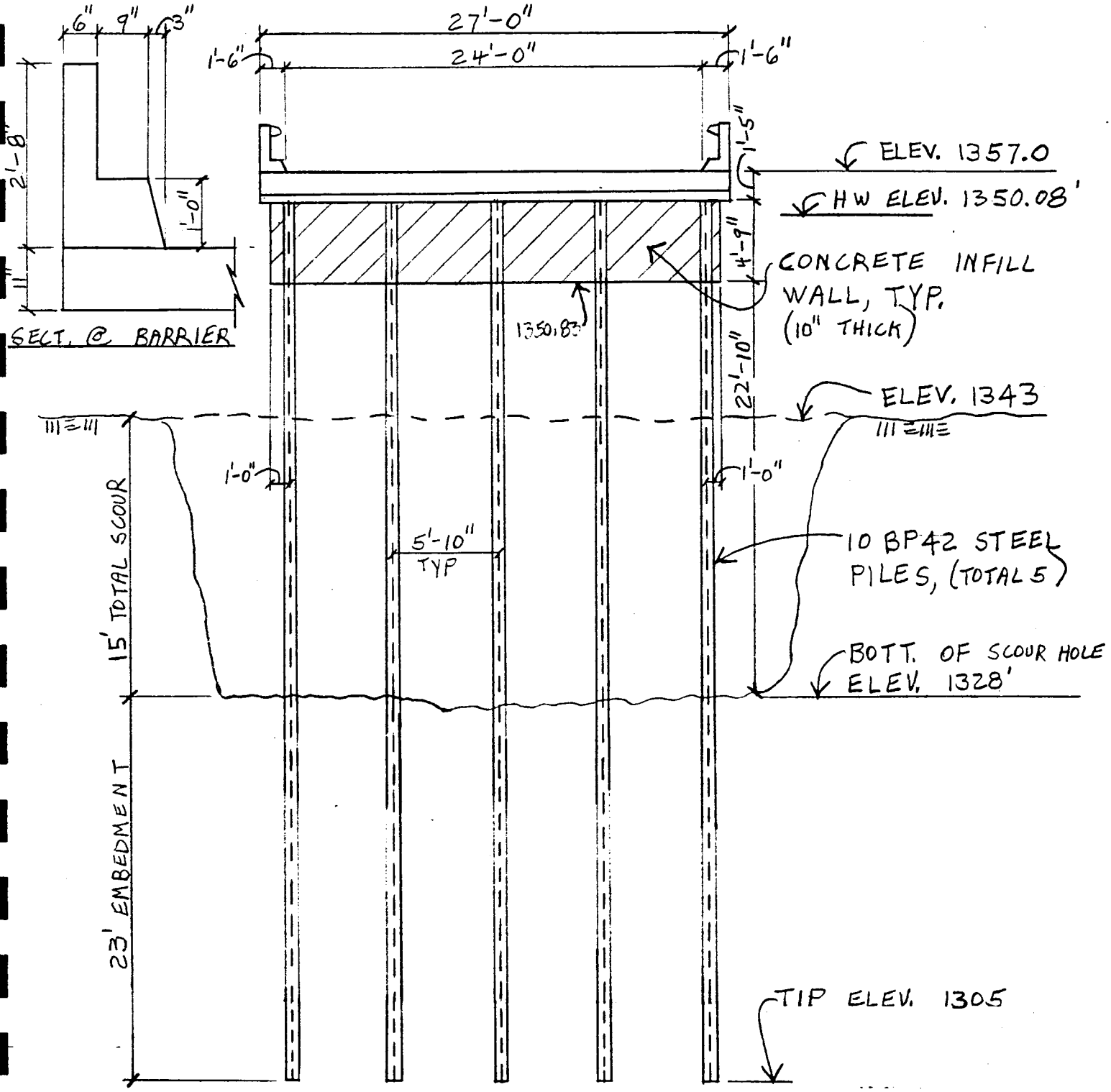

PIER ELEVATION

Cannon & Associates, Inc.
Consulting Engineers

project no. : CA 94046-1
project : POWER RD OVER QUEEN CRK
designed by : JB
checked by : HM
date : 5/96 sht. 4 of 19

PIER ANALYSIS

DEAD LOAD SUPERSTRUCTURE

DECK: $11''/12(27')(.15^{k}/ft^3) = 3.7^{k/l}$

BARRIER: $\left[\left[16.5''(12'') + 6''(20'')\right] 1/144(.15) + \frac{5^{\#/l}}{1000}\right] 2 = 0.7^{k/l}$

$DL = 4.4^{k/ft}$

PIER LOADS

DEAD LOAD:

MAX. SUPERSTRUCTURE REACTION $= 129.8^{k}$ (PER CONTINUOUS BEAM ANALYSIS)

6" HAUNCH: $1/2(0.5')(4')(2)(27')(.15^{k}/ft^3) = 8.1^{k}$

10" CONC. INFILL: $10''/12(4.75')(25.33')(.15^{k}/ft^3) = 15.0^{k}$

PIER DL $= 152.9^{k}$

APPROX. DL PER PILE $= 152.9^{k}/5 \text{ PILES} + 42^{\#/l}(27.6')\frac{1}{1000} = 31.7^{k}/\text{PILE}$

LIVE LOAD: HS20 2 LANES $I = \frac{50}{29+125} = 0.32$, Use 0.3

MAX. LL REACTION (PER CONT. BM ANALYSIS) $= 59.4^{k}/\text{LANE}(2 \text{ LANES}) = 118.8^{k}$

APPROX. LL PER PILE $= 118.8^{k}/5 \text{ PILES} = 23.8^{k}/\text{PILE}$

CHECK VERTICAL CAPACITY OF PILES BASED ON SOIL CAPACITY

Service Dead Load $= 31.7^{k}$
Service Live Load $= 23.8^{k}$
} APPROX. Total Load $= 55.5^{k}$

Ultimate PILE Capacity $= 103^{k} > 55.5^{k}$ O.K. (See sht. 6, AGRA Chart)

∴ CHECK Lateral Stability.

Project Power Road Bridge Job No. E95-36

FIGURE 8

ESTIMATED ULTIMATE DOWNWARD CAPACITY OF DRIVEN, 10-inch BP PILES

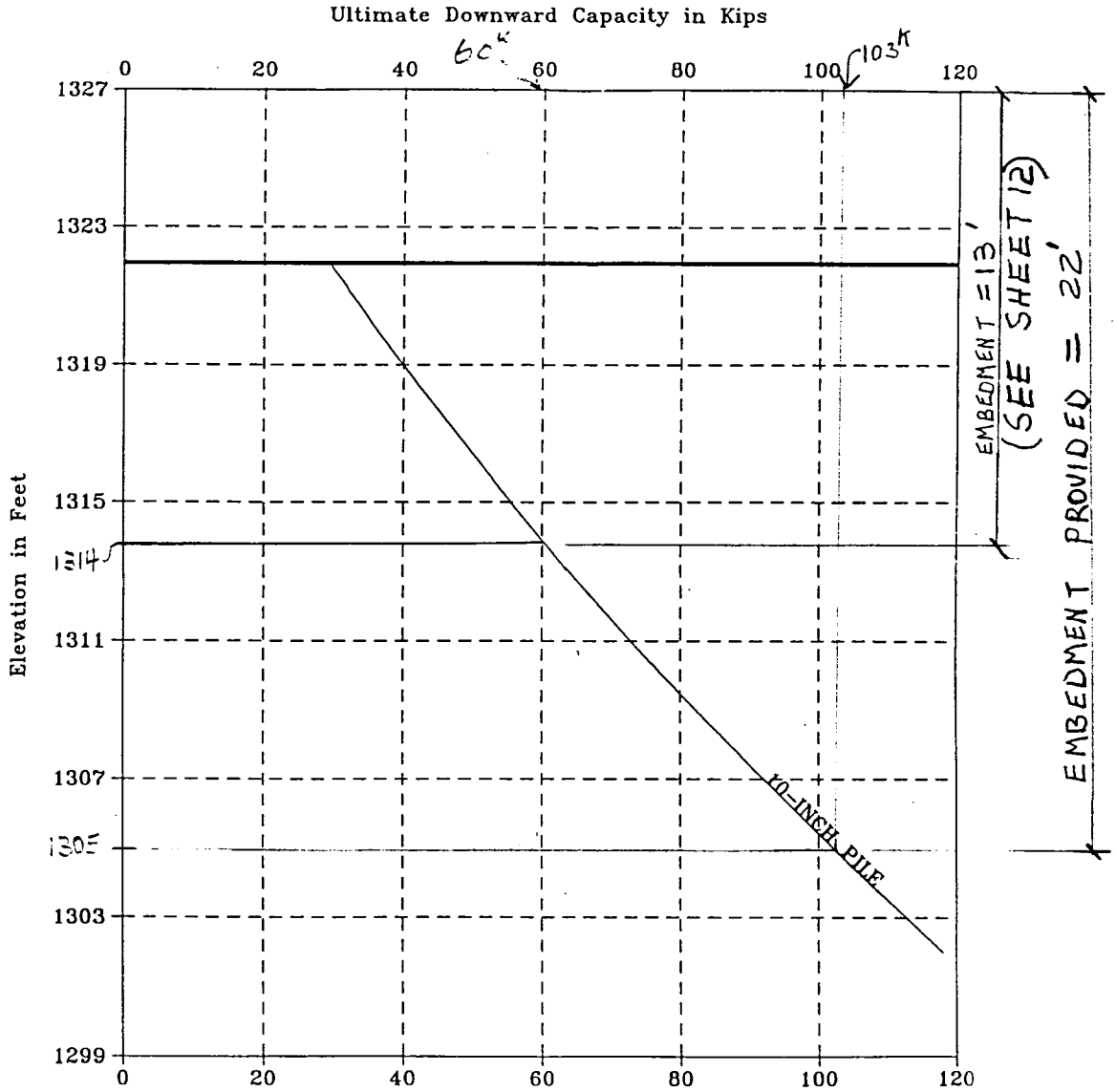

AGRA
Earth & Environmental, Inc.

B-8

REFERENCE: GEOTECHNICAL INVESTIGATION REPORT
AGRA EARTH & ENVIRONMENTAL, INC.
JOB NO. E95-36 DATED 4/15/96

Cannon & Associates, Inc.
Consulting Engineers

project no. : CA 94046-1
project : POWER RD @ QUEEN CREEK
designed by : TB
checked by : HM
date : 5/96 sht. 6 of 19

PIER CAP SUPERIMPOSED LOADS.

$$DL = 152.9^{k} - \underbrace{.77^{k/1}(25.33')}_{\text{CAP + INFILL}} = 133.4^{k}$$

$$W_{DL} = 133.4^{k}/25.33' = 5.27^{k/1} = 0.439^{k/in}$$

LIVE LOAD: $59.4^{k}/\text{LANE}\ (1/2) = 29.7^{k}/\text{WHEEL}$

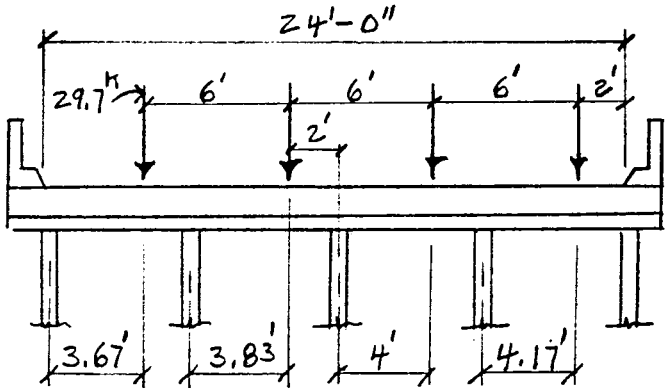

Cannon & Associates, Inc.
Consulting Engineers

project no. : CA 94046-1
project : POWER RD OVER QUEEN CRK
designed by : JB
checked by : HM
date : 5/96 sht. 7 of 19

LATERAL ANALYSIS

STREAM FLOW FORCES (Q100 Flow Condition)

Q_{500} FLOW CONDITIONS
HW ELEVATION = 1350.08
ANGLE OF ATTACK = 0° ⇒ FOR ANALYSIS USE 5° (ATTACK ∡ + 5°)
TOTAL SCOUR = 15'
PILE SPACING = 5'-10"
AVERAGE VELOCITY = 7.8 ft/SEC.

STREAM FLOW CRITERIA

- SHAFT CLEAR SPACING = 5' < 16' ⇒ ASSUME TOTAL BLOCKAGE BETWEEN PILES. USE OBSTRUCTION WIDTH BASED ON PROJECTED AREA AT 5° WITH 2 FT OF DEBRIS EACH SIDE OF PROJECTED AREA.
- ASSUME TOTAL STREAM FORCE IS EQUALLY DISTRIBUTED TO EACH PILE.
- USE K = 1.4 FOR PILES WITH DEBRIS
- ASSUME DEBRIS EXTENDS TO FLOW LINE (≈7')

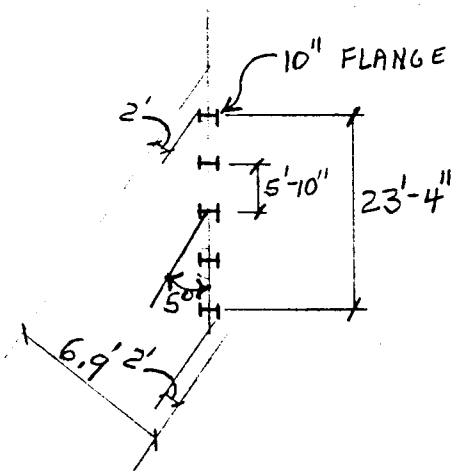

PROJECTED WIDTH:

$23.33' \sin 5° + 10''/12 + 2(2') = 6.9'$

$(23.33' + 2') \sin 5° + 2(2') = 6.2'$ @ INFILL

∴ USE 6.9'

STREAM FLOW, CONT.

$$P_{max} = 2P_{AVG} = 2(1.4)(7.8\,^{1}/_{SEC})^2 \frac{1}{1000} = 0.17\ ^{K}/_{ft^2}$$

$$\Delta P = \frac{0.17}{7.08'} = 0.024\ ^{KSF}/_{FT}$$

$$SF1 = 0.17\ ^{K}/_{ft^2}(6.9') = 1.173\ ^{K}/_{1}$$
$$SF2 = [.17 - 2'(0.024)]\,6.9' = 0.842\ ^{K}/_{1}$$
$$SF3 = [.17 - 4'(0.024)]\,6.9' = 0.511\ ^{K}/_{1}$$

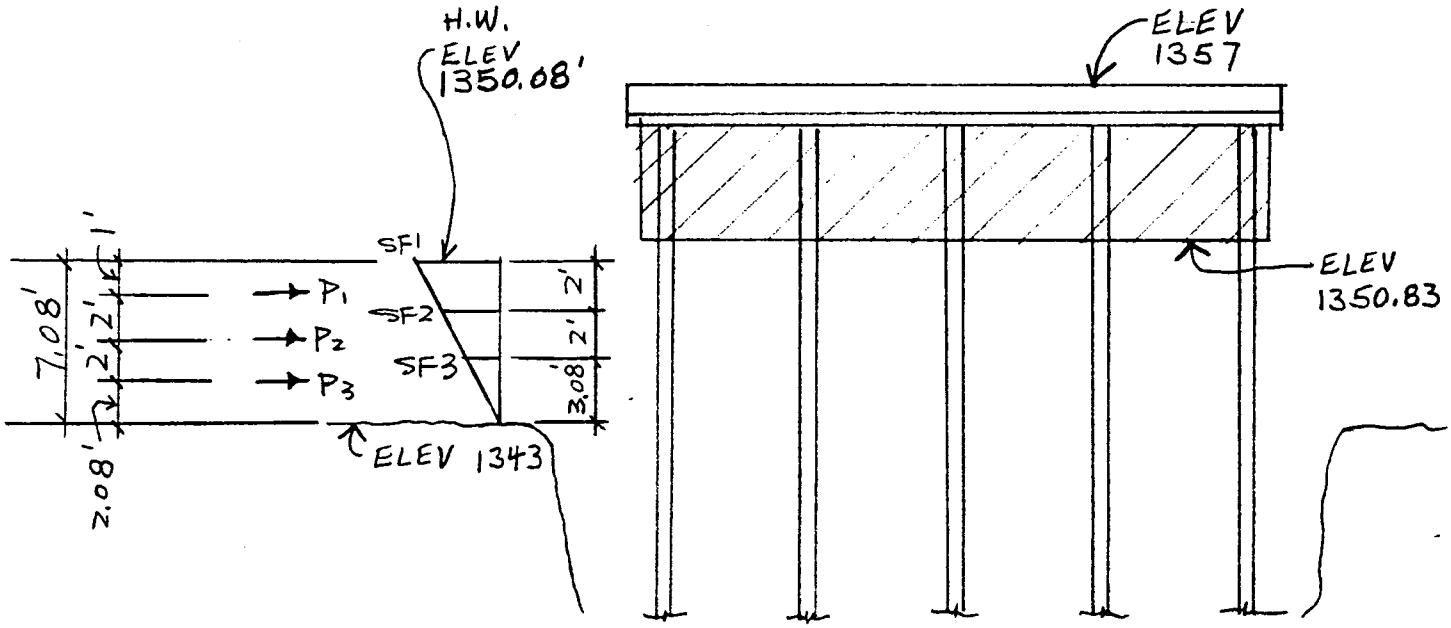

STREAM FLOW, CONT.

EQUIVALENT CONCENTRATED LOADS FROM STREAM FORCE ON PIER:

$P_1 = (1.173 + 0.842)\,\frac{1}{2}(2') = 2.02^k$

$P_2 = (0.842 + 0.511)\,\frac{1}{2}(2') = 1.35^k$

$P_3 = (0.511 + 0)\,\frac{1}{2}(3.08) = 0.79^k$

RESOLVE TOTAL FORCES INTO LONGITUDINAL AND TRANSVERSE DIRECTIONS AND DIVIDE EVENLY BETWEEN PILES: $\cos 5^\circ = 0.996$

$\sin 5^\circ = 0.087$

$P_{1T} = 2.02^k (.996)\,\frac{1}{5}$ PILES $= 0.40^k/\text{PILE}$ $\quad P_{1L} = 0.04^k/\text{PILE}$

$P_{2T} = 1.35^k (.996)\,\frac{1}{5} = 0.27$ $\quad P_{2L} = 0.02$

$P_{3T} = 0.79^k (.996)\,\frac{1}{5} = 0.16$ $\quad P_{3L} = 0.01$

Forces on each pile

STREAM FLOW CONT.

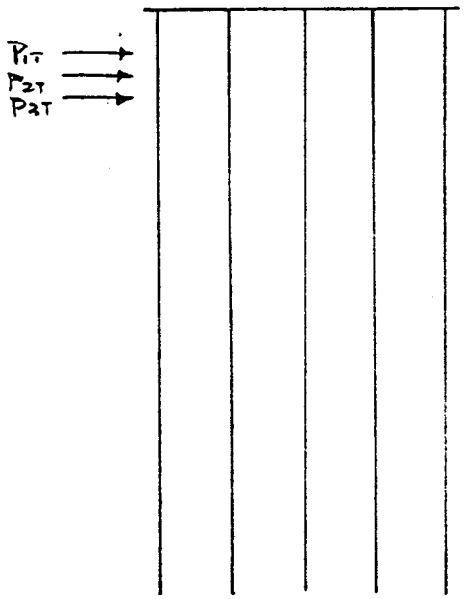

TRANSVERSE MODEL
(LOADS PER SHAFT)

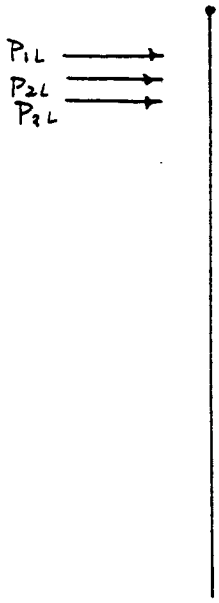

LONGITUDINAL MODEL
(LOADS PER SHAFT)

SEE COMPUTER ANALYSIS (SHEET 15) FOR COMPUTER MODELS AND RESULTS

RESULTS FROM TRANSVERSE FRAME ANALYSIS

TOP OF PILE (MEM. 46): $P_{DL} = 31.57^k$ $P_{LL} = 26.60^k$ $P_{SF} = 0.69^k$

$M_{DL} = -0.07^{'-k}$ $M_{LL} = -.06^{'-k}$ $M_{SF} = -8.6^{'-k}$

BOTT. OF PILE: (PT. OF MAX MOM.) MEM. 49 $P_{DL} = 32.6^k$ $P_{LL} = 26.60^k$ $P_{SF} = 0.69^k$

$M_{DL} = .02^{'-k}$ $M_{LL} = 0.05^{'-k}$ $M_{SF} = 9.38^{'-k}$

RESULTS FROM LONGITUDINAL FRAME ANALYSIS:

TOP OF PILE: $P_{SF} = 0$ $M_{SF} = 0$

BOTT. OF PILE: (PT. OF MAX MOM.) MEM 4 $P_{SF} = 0$ $M_{SF} = 1.54^{'-k}$

CHECK PILE CAPACITY BASED ON STRENGTH OF SOIL:

$P_{TL} = 32.6^k + 26.60^k + 0.69^k = 59.89^k \approx 60^k$

ULTIMATE PILE CAPACITY (W/ SAFETY FACTOR = 1.0) $= 103^k > 60^k$ O.K.

SEE SHT 6

PILE TIP ELEVATION = 1305'

EMBEDMENT DEPTH PROVIDED = 1327' - 1305' = 22'

EMBEDMENT DEPTH REQUIRED = 1327' - 1314' = 13' < 22' O.K.

GROUP LOADING

USE GROUP VII LOADING + LIVE LOAD + IMPACT

$1.3\left[\beta_D D + \beta_{L+I}(L+I) + \beta_E E + 1.0B + 1.0\,SF\right]$

Use I = 0.3 (see sht. 5)

USE $\beta_D = 1.0$ $\beta_{L+I} = 1.0$ $E = 0$ $B \approx 0$

TOP OF PILE: $P_U = 1.3\left[1.0(31.57)+1.0(1.3)(26.6^K)+1.0(0.69^K)\right] = 86.9^K$

$M_{U_T} = 1.3\left[1.0(.07)+1.0(1.3)(.06)+1.0(8.6)\right] = 11.4^{1-K}$

$M_{UL} = 1.3\left[1.0(0)\right] = 0$

BOTT. OF PILE: (PT. OF MAX MOMENT) $P_U = 1.3\left[1.0(32.6)+1.0(1.3)(26.6)+1.0(0.69)\right] = 88.2^K$

$M_{U_T} = 1.3\left[1.0(.02)+1.0(1.3)(.05)+1.0(9.38)\right] = 12.3^{1-K}$

$M_{UL} = 1.3\left[1.0(1.54)\right] = 2.0^{1-K}$

<u>Check Axial Capacity of Pile</u>

$K_{LONG.} = 2.10 \quad L_c = 22.83' + 4.75' = 27.6' \quad r_x = 4.13''$

$K_{TRANS.} = 1.2 \quad L_c = 22.83' \quad r_y = 2.41''$ ← BP 10x42

$K_{LONG}\, L_c/r_x = \dfrac{2.10(27.6')(12''/1)}{4.13''} = 168.4$ ← CONTROLS

$K_{TRANS}\, L_c/r_y = \dfrac{1.20(22.8')(12''/1)}{2.41''} = 136.2$

$\sqrt{\dfrac{2\pi^2 E}{F_y}} = 126.1 < 168.4 \qquad$ USE $F_y = 36^{ksi}$

$F_{cr} = \dfrac{\pi^2 E}{\left(\frac{KL_c}{r}\right)^2} = \dfrac{\pi^2(29\times10^3\ ksi)}{(168.4)^2} = 10.09^{ksi}$

CHECK COMBINED AXIAL LOAD & BENDING ON PILES

$$\frac{P}{.85 A_s F_{cr}} + \frac{M_T C}{M_{u_T}\left(1-\frac{P}{A_s F_e}\right)} + \frac{M_L C}{M_{u_L}\left(1-\frac{P}{A_s F_e}\right)} \leq 1.0$$

$M_T = 12.3^{1-k}$ $\quad M_L = 2.0^{1-k}$ $\quad C = 1.0$ $\quad P = 88.2^{k}$

$M_{u_T} = F_y Z_y = 36^{ksi}(21.8\ in^3)\ 1/12 = 65.4^{1-k}$

$M_{u_L} = F_y Z_x = 36^{ksi}(48.3\ in^3)\ 1/12 = 144.9^{1-k}$

$F_e = \frac{\pi^2 E}{(KL_c/r)^2}$ $\quad F_{e_T} = \frac{\pi^2(29 \times 10^3\ Ksi)}{(136.2)^2} = 15.43^{ksi}$

$F_{e_L} = F_{CR} = 10.09^{ksi}$

$$\frac{88.2^{k}}{0.85(12.4\ IN^2)(10.09^{ksi})} + \frac{12.3^{1-k}(1.0)}{65.4^{1-k}\left(1-\frac{88.2^{k}}{12.4(15.43)}\right)} + \frac{2.0^{1-k}(1.0)}{144.9^{1-k}\left(1-\frac{88.2}{12.4(10.09)}\right)}$$

$0.83 + 0.35 + 0.05 = 1.23 > 1.0$ N.G.

∴ PILES NOT ADEQUATE

Summary of Results

PILES ARE LATERALLY UNSTABLE FOR Q_{100} STREAM FLOW CONDITIONS. THEREFORE, PILES ARE LATERALLY UNSTABLE FOR Q_{500} FLOW CONDITIONS.

COMPUTER ANALYSIS

Q_{100} FLOW CONDITIONS

COMPUTER MODELS

TRANSVERSE PIER FRAME MODEL (Q100)

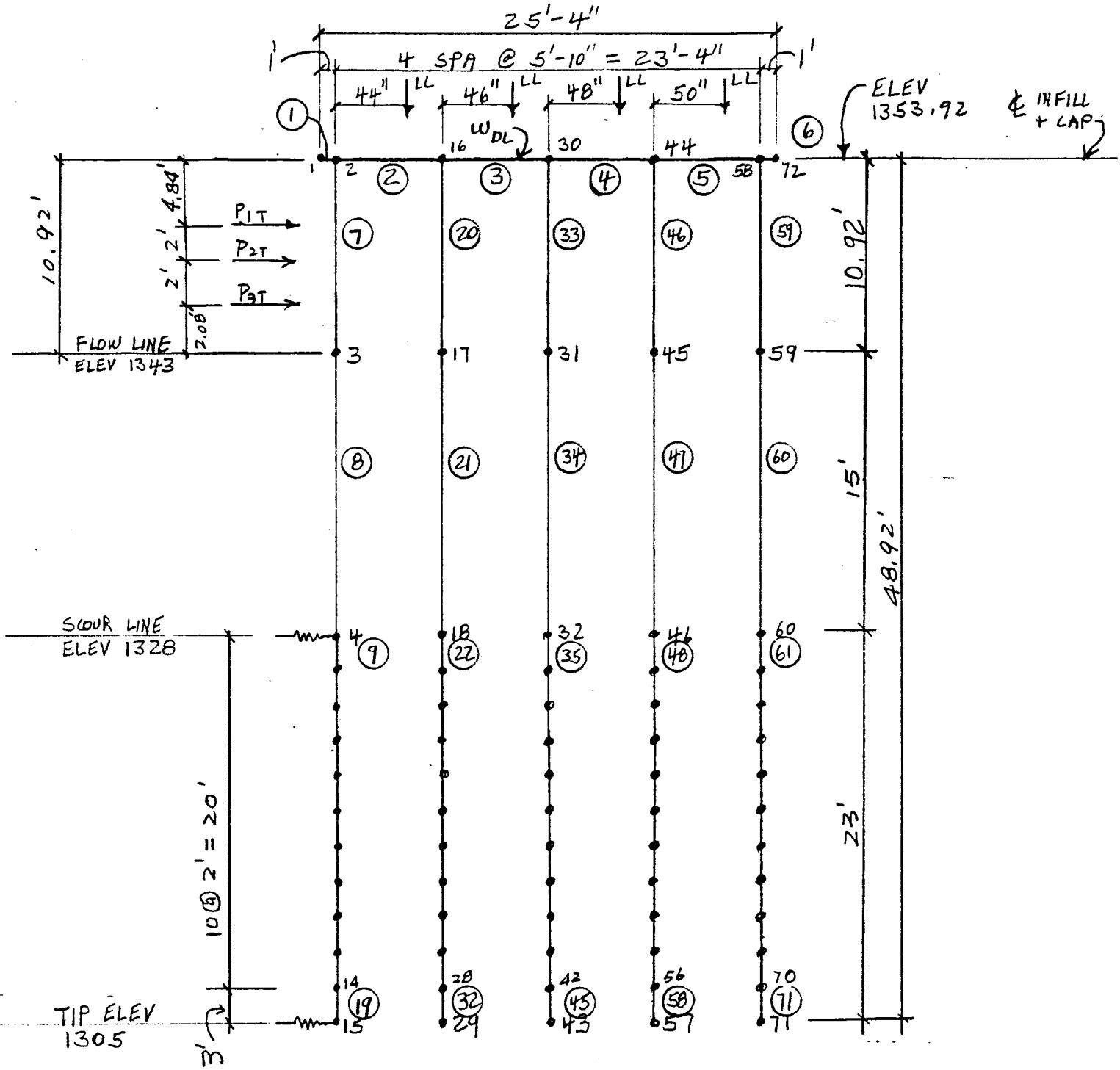

Cannon & Associates, Inc.
Consulting Engineers

project no. : CA 94046-1
project : POWER RD @ QUEEN CRK
designed by : JB
checked by : HM
date : 5/96 sht. 16 of 19

COMPUTER MODELS

LONGITUDINAL PIER FRAME MODEL (Q100)

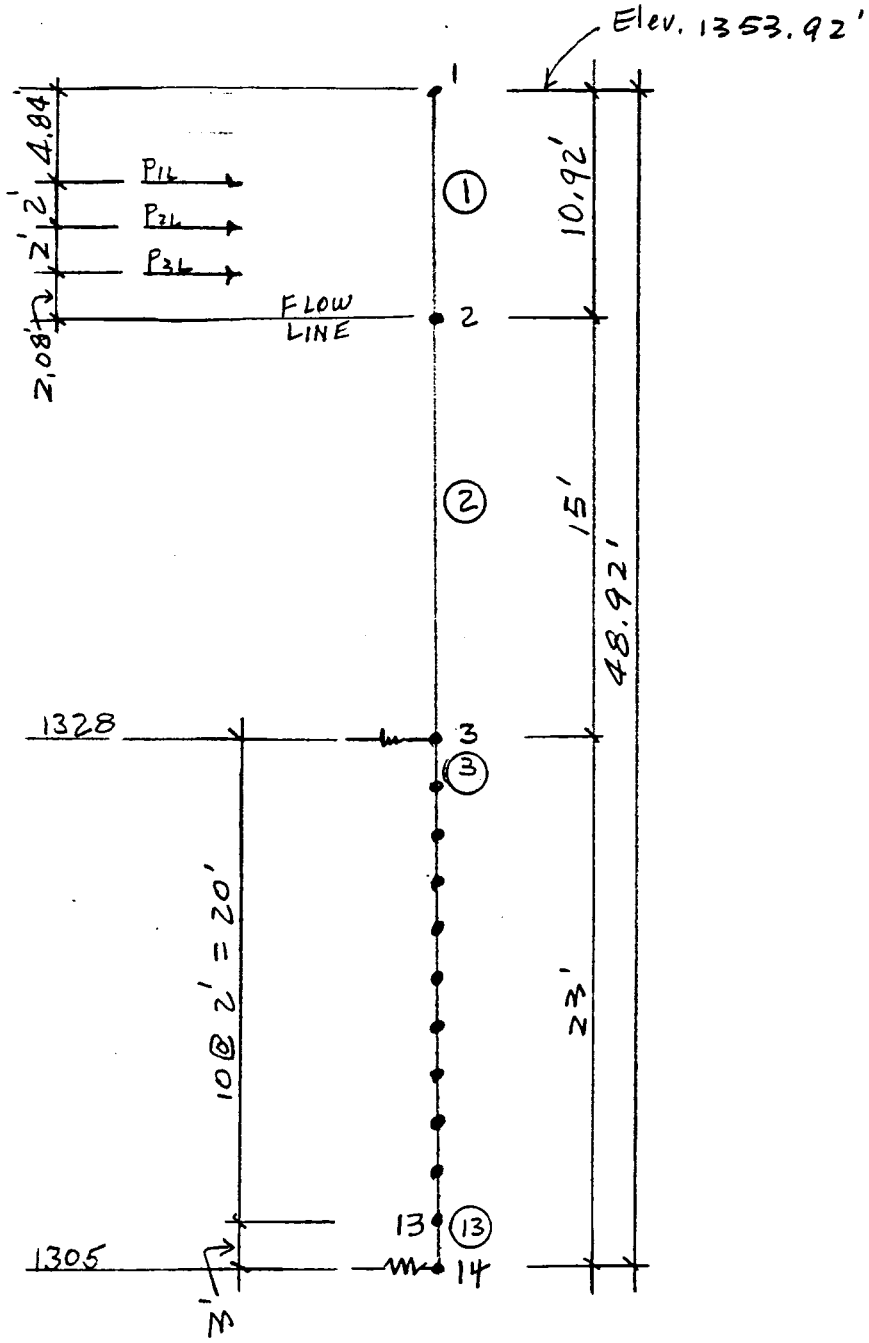

COMUTER MODELS

SECTION PROPERTIES

USE CONC. INFILL AS CAP BEAM. DEPTH IS FROM TOP OF DECK TO BOTT. OF INFILL:

$$I_{CAP} = 1/12(10'')(74.04'')^3 = 338,235 \text{ in}^4$$

$$E_{CAP} = 3122^{ksi} \text{ (ASSUME } f_c' = 3^{ksi}\text{)}$$

$$A_{CAP} = 10''(74.04'') = 740.4 \text{ in}^2$$

$$w_{CAP} = \frac{10''(74.04'')}{144}(.15^{k/ft^3}) = .77^{k/ft} = 0.0643^{k/in}$$

$$I_{y_{PILE}} = 71.7 \text{ in}^4 \quad I_{x_{PILE}} = 210 \text{ in}^4 \quad A_{PILE} = 12.4 \text{ in}^2$$

$$w_{PILE} = 42^{\#/1} = 0.0035^{k/in}$$

SPRING CONSTANTS

SPRING CONSTANT = K(PILE WIDTH)(NODE SPACING)
= K(10")(24")

DEPTH BELOW SCOUR LINE (FT)	SUBGRADE MODULUS (PCI)	SPRING CONSTANT K/in
0	0	0
2	59	14
4	97	23
6	113	27
8	129	31
10	155	37
12	171	41
14	187	45
16	203	49
18	219	53
20	230(10")(30")	69
23	265(10")(18")	48

COMPUTER MODELS

SUBGRADE MODULUS CHART PER AGRA EARTH & ENVIRONMENTAL, INC. JOB NO. E95-36 DATED 4/15/96

Figure 19 - Power Road

10-inch BP Pile

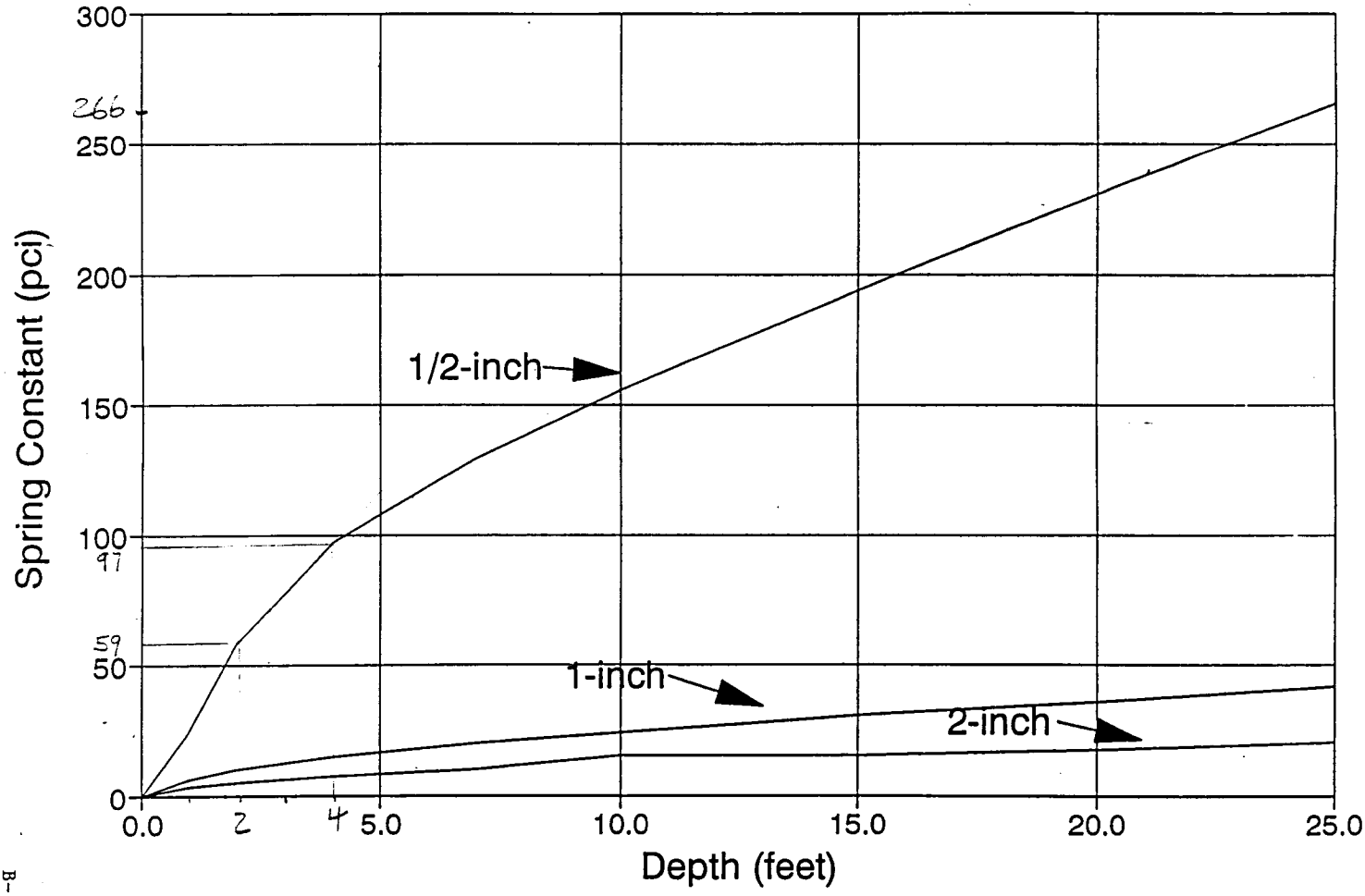

Cannon & Associates, Inc.
Consulting Engineers

project no. : CA 94046-1
project : POWER RD. @ QUEEN CREEK
designed by : TB
checked by : HM
date : 5/96 sht. 19 of 19

POWER ROAD BRIDGE AT QUEEN CREEK, TRANS. FRAME, Q100 FLOW

F R A M E E L E M E N T F O R C E S

ELT ID	LOAD COND	AXIAL FORCE	DIST ENDI	1-2 PLANE SHEAR	1-2 PLANE MOMENT	1-3 PLANE SHEAR	1-3 PLANE MOMENT	AXIAL TORQ
1								
	1	.00						
			.0	.00	.00			
			12.0	-6.04	-36.24			
	2	.00						
			.0	.00	.00			
			12.0	.00	.00			
	3	.00						
			.0	.00	.00			
			12.0	.00	.00			
2								
	1	-.01						
			.0	23.01	-37.60			
			45.7	.00	488.37			
			70.0	-12.22	339.99			
	2	-.01						
			.0	17.86	-1.92			
			44.0	17.86	783.82			
			70.0	-11.84	475.91			
	3	.00						
			.0	-1.50	103.12			
			70.0	-1.50	-1.72			
3								
	1	-.01						
			.0	19.12	339.13			
			38.0	.00	702.39			
			70.0	-16.11	444.60			
	2	-.01						
			.0	10.81	474.68			
			46.0	10.81	972.01			
			70.0	-18.89	518.69			
	3	.00						
			.0	-2.19	101.47			
			70.0	-2.19	-51.61			
4								
	1	-.01						
			.0	16.11	444.60			
			32.0	.00	702.39			
			70.0	-19.12	339.14			
	2	-.01						
			.0	6.74	518.50			
			48.0	6.74	842.19			
			70.0	-22.96	337.15			
	3	.00						
			.0	-2.19	51.61			
			70.0	-2.19	-101.47			
5								
	1	-.01						
			.0	12.22	339.98			
			24.3	.00	488.37			
			70.0	-23.01	-37.60			
	2	-.01						

POWER ROAD BRIDGE AT QUEEN CREEK, TRANS. FRAME, Q100 FLOW

F R A M E E L E M E N T F O R C E S

ELT ID	LOAD COND	AXIAL FORCE	DIST ENDI	1-2 PLANE SHEAR	1-2 PLANE MOMENT	1-3 PLANE SHEAR	1-3 PLANE MOMENT	AXIAL TORQ
			.0	3.64	337.90			
			50.0	3.64	519.91			
			70.0	-26.06	-1.29			
	3	.00						
			.0	-1.50	1.72			
			70.0	-1.50	-103.12			
6	----------							
	1	.00						
			.0	6.04	-36.24			
			12.0	.00	.00			
	2	.00						
			.0	.00	.00			
			12.0	.00	.00			
	3	.00						
			.0	.00	.00			
			12.0	.00	.00			
7	----------							
	1	-29.28						
			.0	-.01	1.36			
			131.0	-.01	.67			
	2	-17.86						
			.0	-.01	1.92			
			131.0	-.01	1.07			
	3	1.50						
			.0	.00	-103.12			
			58.1	.00	-103.13			
			82.1	.40	-93.53			
			106.1	.67	-77.46			
			131.0	.83	-56.75			
20	----------							
	1	-31.57						
			.0	.00	.85			
			131.0	.00	.42			
	2	-22.65						
			.0	.00	1.23			
			131.0	.00	.73			
	3	.69						
			.0	.00	-103.19			
			58.1	.00	-103.18			
			82.1	.40	-93.58			
			106.1	.67	-77.50			
			131.0	.83	-56.78			
33	----------							
	1	-32.45						
			.0	.00	.00			
			131.0	.00	.00			
	2	-25.63						
			.0	.00	.18			
			131.0	.00	.22			
	3	.00						
			.0	.00	-103.22			
			58.1	.00	-103.21			

POWER ROAD BRIDGE AT QUEEN CREEK, TRANS. FRAME, Q100 FLOW

F R A M E E L E M E N T F O R C E S

ELT ID	LOAD COND	AXIAL FORCE	DIST ENDI	1-2 PLANE SHEAR	1-2 PLANE MOMENT	1-3 PLANE SHEAR	1-3 PLANE MOMENT	AXIAL TORQ
			82.1	.40	-93.61			
			106.1	.67	-77.52			
			131.0	.83	-56.80			
46								
	1	-31.57						
			.0	.00	-.85			
			131.0	.00	-.42			
	2	-26.60						
			.0	.00	-.75			
			131.0	.00	-.23			
	3	-.69						
			.0	.00	-103.19			
			58.1	.00	-103.18			
			82.1	.40	-93.58			
			106.1	.67	-77.50			
			131.0	.83	-56.78			
59								
	1	-29.28						
			.0	.01	-1.36			
			131.0	.01	-.67			
	2	-26.06						
			.0	.01	-1.29			
			131.0	.01	-.50			
	3	-1.50						
			.0	.00	-103.12			
			58.1	.00	-103.13			
			82.1	.40	-93.53			
			106.1	.67	-77.46			
			131.0	.83	-56.75			
8								
	1	-29.82						
			.0	-.01	.67			
			180.0	-.01	-.29			
	2	-17.86						
			.0	-.01	1.07			
			180.0	-.01	-.10			
	3	1.50						
			.0	.83	-56.75			
			180.0	.83	92.62			
21								
	1	-32.12						
			.0	.00	.42			
			180.0	.00	-.18			
	2	-22.65						
			.0	.00	.73			
			180.0	.00	.05			
	3	.69						
			.0	.83	-56.78			
			180.0	.83	92.63			
34								
	1	-32.99						
			.0	.00	.00			

POWER ROAD BRIDGE AT QUEEN CREEK, TRANS. FRAME, Q100 FLOW

F R A M E E L E M E N T F O R C E S

ELT ID	LOAD COND	AXIAL FORCE	DIST ENDI	1-2 PLANE SHEAR	1-2 PLANE MOMENT	1-3 PLANE SHEAR	1-3 PLANE MOMENT	AXIAL TORQ
			180.0	.00	.00			
	2	-25.63						
			.0	.00	.22			
			180.0	.00	.27			
	3	.00						
			.0	.83	-56.80			
			180.0	.83	92.64			
47	----------							
	1	-32.12						
			.0	.00	-.42			
			180.0	.00	.18			
	2	-26.60						
			.0	.00	-.23			
			180.0	.00	.47			
	3	-.69						
			.0	.83	-56.78			
			180.0	.83	92.63			
60	----------							
	1	-29.82						
			.0	.01	-.67			
			180.0	.01	.29			
	2	-26.06						
			.0	.01	-.50			
			180.0	.01	.59			
	3	-1.50						
			.0	.83	-56.75			
			180.0	.83	92.62			
9	----------							
	1	-30.18						
			.0	-.01	-.29			
			24.0	-.01	-.42			
	2	-17.86						
			.0	-.01	-.10			
			24.0	-.01	-.25			
	3	1.50						
			.0	.83	92.62			
			24.0	.83	112.53			
10	----------							
	1	-30.26						
			.0	.00	-.42			
			24.0	.00	-.41			
	2	-17.86						
			.0	.00	-.25			
			24.0	.00	-.29			
	3	1.50						
			.0	-.48	112.53			
			24.0	-.48	101.07			
11	----------							
	1	-30.35						
			.0	.00	-.41			
			24.0	.00	-.30			
	2	-17.86						

POWER ROAD BRIDGE AT QUEEN CREEK, TRANS. FRAME, Q100 FLOW

F R A M E E L E M E N T F O R C E S

ELT ID	LOAD COND	AXIAL FORCE	DIST ENDI	1-2 PLANE SHEAR	1-2 PLANE MOMENT	1-3 PLANE SHEAR	1-3 PLANE MOMENT	AXIAL TORQ
			.0	.00	-.29			
			24.0	.00	-.23			
	3	1.50						
			.0	-1.27	101.07			
			24.0	-1.27	70.71			
12	----------							
	1	-30.43						
			.0	.01	-.30			
			24.0	.01	-.17			
	2	-17.86						
			.0	.00	-.23			
			24.0	.00	-.14			
	3	1.50						
			.0	-1.32	70.71			
			24.0	-1.32	38.91			
13	----------							
	1	-30.52						
			.0	.00	-.17			
			24.0	.00	-.07			
	2	-17.86						
			.0	.00	-.14			
			24.0	.00	-.07			
	3	1.50						
			.0	-1.01	38.91			
			24.0	-1.01	14.77			
14	----------							
	1	-30.60						
			.0	.00	-.07			
			24.0	.00	-.01			
	2	-17.86						
			.0	.00	-.07			
			24.0	.00	-.02			
	3	1.50						
			.0	-.57	14.77			
			24.0	-.57	.99			
15	----------							
	1	-30.68						
			.0	.00	-.01			
			24.0	.00	.01			
	2	-17.86						
			.0	.00	-.02			
			24.0	.00	.01			
	3	1.50						
			.0	-.23	.99			
			24.0	-.23	-4.45			
16	----------							
	1	-30.77						
			.0	.00	.01			
			24.0	.00	.02			
	2	-17.86						
			.0	.00	.01			
			24.0	.00	.01			

POWER ROAD BRIDGE AT QUEEN CREEK, TRANS. FRAME, Q100 FLOW

F R A M E E L E M E N T F O R C E S

ELT ID	LOAD COND	AXIAL FORCE	DIST ENDI	1-2 PLANE SHEAR	1-2 PLANE MOMENT	1-3 PLANE SHEAR	1-3 PLANE MOMENT	AXIAL TORQ
	3	1.50						
			.0	-.02	-4.45			
			24.0	-.02	-4.90			
17								
	1	-30.85						
			.0	.00	.02			
			24.0	.00	.01			
	2	-17.86						
			.0	.00	.01			
			24.0	.00	.01			
	3	1.50						
			.0	.07	-4.90			
			24.0	.07	-3.28			
18								
	1	-30.94						
			.0	.00	.01			
			24.0	.00	.01			
	2	-17.86						
			.0	.00	.01			
			24.0	.00	.01			
	3	1.50						
			.0	.08	-3.28			
			24.0	.08	-1.45			
19								
	1	-31.04						
			.0	.00	.01			
			36.0	.00	.00			
	2	-17.86						
			.0	.00	.01			
			36.0	.00	.00			
	3	1.50						
			.0	.04	-1.45			
			36.0	.04	.00			
32								
	1	-33.34						
			.0	.00	.00			
			36.0	.00	.00			
	2	-22.65						
			.0	.00	.00			
			36.0	.00	.00			
	3	.69						
			.0	.04	-1.45			
			36.0	.04	.00			
45								
	1	-34.21						
			.0	.00	.00			
			36.0	.00	.00			
	2	-25.63						
			.0	.00	.00			
			36.0	.00	.00			
	3	.00						
			.0	.04	-1.45			

POWER ROAD BRIDGE AT QUEEN CREEK, TRANS. FRAME, Q100 FLOW

F R A M E E L E M E N T F O R C E S

ELT ID	LOAD COND	AXIAL FORCE	DIST ENDI	1-2 PLANE SHEAR	1-2 PLANE MOMENT	1-3 PLANE SHEAR	1-3 PLANE MOMENT	AXIAL TORQ
			36.0	.04	.00			
58								
	1	-33.34						
			.0	.00	.00			
			36.0	.00	.00			
	2	-26.60						
			.0	.00	-.01			
			36.0	.00	.00			
	3	-.69						
			.0	.04	-1.45			
			36.0	.04	.00			
71								
	1	-31.04						
			.0	.00	-.01			
			36.0	.00	.00			
	2	-26.06						
			.0	.00	-.01			
			36.0	.00	.00			
	3	-1.50						
			.0	.04	-1.45			
			36.0	.04	.00			
22								
	1	-32.47						
			.0	.00	-.18			
			24.0	.00	-.26			
	2	-22.65						
			.0	.00	.05			
			24.0	.00	-.04			
	3	.69						
			.0	.83	92.63			
			24.0	.83	112.56			
23								
	1	-32.56						
			.0	.00	-.26			
			24.0	.00	-.25			
	2	-22.65						
			.0	.00	-.04			
			24.0	.00	-.08			
	3	.69						
			.0	-.48	112.56			
			24.0	-.48	101.09			
24								
	1	-32.64						
			.0	.00	-.25			
			24.0	.00	-.19			
	2	-22.65						
			.0	.00	-.08			
			24.0	.00	-.08			
	3	.69						
			.0	-1.27	101.09			
			24.0	-1.27	70.72			

POWER ROAD BRIDGE AT QUEEN CREEK, TRANS. FRAME, Q100 FLOW

F R A M E E L E M E N T F O R C E S

ELT ID	LOAD COND	AXIAL FORCE	DIST ENDI	1-2 PLANE SHEAR	1-2 PLANE MOMENT	1-3 PLANE SHEAR	1-3 PLANE MOMENT	AXIAL TORQ
25								
	1	-32.73						
			.0	.00	-.19			
			24.0	.00	-.11			
	2	-22.65						
			.0	.00	-.08			
			24.0	.00	-.06			
	3	.69						
			.0	-1.33	70.72			
			24.0	-1.33	38.92			
26								
	1	-32.81						
			.0	.00	-.11			
			24.0	.00	-.05			
	2	-22.65						
			.0	.00	-.06			
			24.0	.00	-.03			
	3	.69						
			.0	-1.01	38.92			
			24.0	-1.01	14.77			
27								
	1	-32.89						
			.0	.00	-.05			
			24.0	.00	-.01			
	2	-22.65						
			.0	.00	-.03			
			24.0	.00	-.01			
	3	.69						
			.0	-.57	14.77			
			24.0	-.57	.99			
28								
	1	-32.98						
			.0	.00	-.01			
			24.0	.00	.01			
	2	-22.65						
			.0	.00	-.01			
			24.0	.00	.00			
	3	.69						
			.0	-.23	.99			
			24.0	-.23	-4.45			
29								
	1	-33.06						
			.0	.00	.01			
			24.0	.00	.01			
	2	-22.65						
			.0	.00	.00			
			24.0	.00	.00			
	3	.69						
			.0	-.02	-4.45			
			24.0	-.02	-4.90			
30								
	1	-33.15						

POWER ROAD BRIDGE AT QUEEN CREEK, TRANS. FRAME, Q100 FLOW

F R A M E E L E M E N T F O R C E S

ELT ID	LOAD COND	AXIAL FORCE	DIST ENDI	1-2 PLANE SHEAR	1-2 PLANE MOMENT	1-3 PLANE SHEAR	1-3 PLANE MOMENT	AXIAL TORQ
			.0	.00	.01			
			24.0	.00	.01			
	2	-22.65						
			.0	.00	.00			
			24.0	.00	.00			
	3	.69						
			.0	.07	-4.90			
			24.0	.07	-3.28			
31	----------							
	1	-33.23						
			.0	.00	.01			
			24.0	.00	.00			
	2	-22.65						
			.0	.00	.00			
			24.0	.00	.00			
	3	.69						
			.0	.08	-3.28			
			24.0	.08	-1.45			
35	----------							
	1	-33.35						
			.0	.00	.00			
			24.0	.00	.00			
	2	-25.63						
			.0	.00	.27			
			24.0	.00	.28			
	3	.00						
			.0	.83	92.64			
			24.0	.83	112.57			
36	----------							
	1	-33.43						
			.0	.00	.00			
			24.0	.00	.00			
	2	-25.63						
			.0	.00	.28			
			24.0	.00	.23			
	3	.00						
			.0	-.48	112.57			
			24.0	-.48	101.10			
37	----------							
	1	-33.52						
			.0	.00	.00			
			24.0	.00	.00			
	2	-25.63						
			.0	.00	.23			
			24.0	.00	.15			
	3	.00						
			.0	-1.27	101.10			
			24.0	-1.27	70.73			
38	----------							
	1	-33.60						
			.0	.00	.00			
			24.0	.00	.00			

POWER ROAD BRIDGE AT QUEEN CREEK, TRANS. FRAME, Q100 FLOW

F R A M E E L E M E N T F O R C E S

ELT ID	LOAD COND	AXIAL FORCE	DIST ENDI	1-2 PLANE SHEAR	1-2 PLANE MOMENT	1-3 PLANE SHEAR	1-3 PLANE MOMENT	AXIAL TORQ
	2	-25.63						
			.0	.00	.15			
			24.0	.00	.07			
	3	.00						
			.0	-1.33	70.73			
			24.0	-1.33	38.92			
39								
	1	-33.68						
			.0	.00	.00			
			24.0	.00	.00			
	2	-25.63						
			.0	.00	.07			
			24.0	.00	.02			
	3	.00						
			.0	-1.01	38.92			
			24.0	-1.01	14.78			
40								
	1	-33.77						
			.0	.00	.00			
			24.0	.00	.00			
	2	-25.63						
			.0	.00	.02			
			24.0	.00	.00			
	3	.00						
			.0	-.57	14.78			
			24.0	-.57	.99			
41								
	1	-33.85						
			.0	.00	.00			
			24.0	.00	.00			
	2	-25.63						
			.0	.00	.00			
			24.0	.00	-.01			
	3	.00						
			.0	-.23	.99			
			24.0	-.23	-4.45			
42								
	1	-33.94						
			.0	.00	.00			
			24.0	.00	.00			
	2	-25.63						
			.0	.00	-.01			
			24.0	.00	-.01			
	3	.00						
			.0	-.02	-4.45			
			24.0	-.02	-4.90			
43								
	1	-34.02						
			.0	.00	.00			
			24.0	.00	.00			
	2	-25.63						
			.0	.00	-.01			

POWER ROAD BRIDGE AT QUEEN CREEK, TRANS. FRAME, Q100 FLOW

F R A M E E L E M E N T F O R C E S

ELT ID	LOAD COND	AXIAL FORCE	DIST ENDI	1-2 PLANE SHEAR	1-2 PLANE MOMENT	1-3 PLANE SHEAR	1-3 PLANE MOMENT	AXIAL TORQ
			24.0	.00	-.01			
	3	.00						
			.0	.07	-4.90			
			24.0	.07	-3.28			
44								
	1	-34.10						
			.0	.00	.00			
			24.0	.00	.00			
	2	-25.63						
			.0	.00	-.01			
			24.0	.00	.00			
	3	.00						
			.0	.08	-3.28			
			24.0	.08	-1.45			
48								
	1	-32.47						
			.0	.00	.18			
			24.0	.00	.26			
	2	-26.60						
			.0	.00	.47			
			24.0	.00	.57			
	3	-.69						
			.0	.83	92.63			
			24.0	.83	112.56			
49								
	1	-32.56						
			.0	.00	.26			
			24.0	.00	.25			
	2	-26.60						
			.0	.00	.57			
			24.0	.00	.51			
	3	-.69						
			.0	-.48	112.56			
			24.0	-.48	101.09			
50								
	1	-32.64						
			.0	.00	.25			
			24.0	.00	.19			
	2	-26.60						
			.0	-.01	.51			
			24.0	-.01	.35			
	3	-.69						
			.0	-1.27	101.09			
			24.0	-1.27	70.72			
51								
	1	-32.73						
			.0	.00	.19			
			24.0	.00	.11			
	2	-26.60						
			.0	-.01	.35			
			24.0	-.01	.19			
	3	-.69						

POWER ROAD BRIDGE AT QUEEN CREEK, TRANS. FRAME, Q100 FLOW

F R A M E E L E M E N T F O R C E S

ELT ID	LOAD COND	AXIAL FORCE	DIST ENDI	1-2 PLANE SHEAR	1-2 PLANE MOMENT	1-3 PLANE SHEAR	1-3 PLANE MOMENT	AXIAL TORQ
			.0	-1.33	70.72			
			24.0	-1.33	38.92			
52								
	1	-32.81						
			.0	.00	.11			
			24.0	.00	.05			
	2	-26.60						
			.0	-.01	.19			
			24.0	-.01	.07			
	3	-.69						
			.0	-1.01	38.92			
			24.0	-1.01	14.77			
53								
	1	-32.89						
			.0	.00	.05			
			24.0	.00	.01			
	2	-26.60						
			.0	.00	.07			
			24.0	.00	.00			
	3	-.69						
			.0	-.57	14.77			
			24.0	-.57	.99			
54								
	1	-32.98						
			.0	.00	.01			
			24.0	.00	-.01			
	2	-26.60						
			.0	.00	.00			
			24.0	.00	-.02			
	3	-.69						
			.0	-.23	.99			
			24.0	-.23	-4.45			
55								
	1	-33.06						
			.0	.00	-.01			
			24.0	.00	-.01			
	2	-26.60						
			.0	.00	-.02			
			24.0	.00	-.02			
	3	-.69						
			.0	-.02	-4.45			
			24.0	-.02	-4.90			
56								
	1	-33.15						
			.0	.00	-.01			
			24.0	.00	-.01			
	2	-26.60						
			.0	.00	-.02			
			24.0	.00	-.02			
	3	-.69						
			.0	.07	-4.90			
			24.0	.07	-3.28			

POWER ROAD BRIDGE AT QUEEN CREEK, TRANS. FRAME, Q100 FLOW

F R A M E E L E M E N T F O R C E S

ELT ID	LOAD COND	AXIAL FORCE	DIST ENDI	1-2 PLANE SHEAR	1-2 PLANE MOMENT	1-3 PLANE SHEAR	1-3 PLANE MOMENT	AXIAL TORQ
57								
	1	-33.23						
			.0	.00	-.01			
			24.0	.00	.00			
	2	-26.60						
			.0	.00	-.02			
			24.0	.00	-.01			
	3	-.69						
			.0	.08	-3.28			
			24.0	.08	-1.45			
61								
	1	-30.18						
			.0	.01	.29			
			24.0	.01	.42			
	2	-26.06						
			.0	.01	.59			
			24.0	.01	.73			
	3	-1.50						
			.0	.83	92.62			
			24.0	.83	112.53			
62								
	1	-30.26						
			.0	.00	.42			
			24.0	.00	.41			
	2	-26.06						
			.0	.00	.73			
			24.0	.00	.67			
	3	-1.50						
			.0	-.48	112.53			
			24.0	-.48	101.07			
63								
	1	-30.35						
			.0	.00	.41			
			24.0	.00	.30			
	2	-26.06						
			.0	-.01	.67			
			24.0	-.01	.47			
	3	-1.50						
			.0	-1.27	101.07			
			24.0	-1.27	70.71			
64								
	1	-30.43						
			.0	-.01	.30			
			24.0	-.01	.17			
	2	-26.06						
			.0	-.01	.47			
			24.0	-.01	.26			
	3	-1.50						
			.0	-1.32	70.71			
			24.0	-1.32	38.91			
65								
	1	-30.52						

POWER ROAD BRIDGE AT QUEEN CREEK, TRANS. FRAME, Q100 FLOW

F R A M E E L E M E N T F O R C E S

ELT ID	LOAD COND	AXIAL FORCE	DIST ENDI	1-2 PLANE SHEAR	1-2 PLANE MOMENT	1-3 PLANE SHEAR	1-3 PLANE MOMENT	AXIAL TORQ
			.0	.00	.17			
			24.0	.00	.07			
	2	-26.06						
			.0	-.01	.26			
			24.0	-.01	.10			
	3	-1.50						
			.0	-1.01	38.91			
			24.0	-1.01	14.77			
66								
	1	-30.60						
			.0	.00	.07			
			24.0	.00	.01			
	2	-26.06						
			.0	.00	.10			
			24.0	.00	.01			
	3	-1.50						
			.0	-.57	14.77			
			24.0	-.57	.99			
67								
	1	-30.68						
			.0	.00	.01			
			24.0	.00	-.01			
	2	-26.06						
			.0	.00	.01			
			24.0	.00	-.03			
	3	-1.50						
			.0	-.23	.99			
			24.0	-.23	-4.45			
68								
	1	-30.77						
			.0	.00	-.01			
			24.0	.00	-.02			
	2	-26.06						
			.0	.00	-.03			
			24.0	.00	-.03			
	3	-1.50						
			.0	-.02	-4.45			
			24.0	-.02	-4.90			
69								
	1	-30.85						
			.0	.00	-.02			
			24.0	.00	-.01			
	2	-26.06						
			.0	.00	-.03			
			24.0	.00	-.02			
	3	-1.50						
			.0	.07	-4.90			
			24.0	.07	-3.28			
70								
	1	-30.94						
			.0	.00	-.01			
			24.0	.00	-.01			

POWER ROAD BRIDGE AT QUEEN CREEK, TRANS. FRAME, Q100 FLOW

F R A M E E L E M E N T F O R C E S

ELT ID	LOAD COND	AXIAL FORCE	DIST ENDI	1-2 PLANE SHEAR	1-2 PLANE MOMENT	1-3 PLANE SHEAR	1-3 PLANE MOMENT	AXIAL TORQ
2		-26.06						
			.0	.00	-.02			
			24.0	.00	-.01			
3		-1.50						
			.0	.08	-3.28			
			24.0	.08	-1.45			

POWER ROAD BRIDGE AT QUEEN CREEK, LONG. FRAME, Q100 FLOW

F R A M E E L E M E N T F O R C E S

ELT ID	LOAD COND	AXIAL FORCE	DIST ENDI	1-2 PLANE SHEAR	1-2 PLANE MOMENT	1-3 PLANE SHEAR	1-3 PLANE MOMENT	AXIAL TORQ
1	1	.00	.0	.00	.00			
			58.1	.00	.00			
			82.1	.04	.96			
			106.1	.06	2.40			
			131.0	.07	4.15			
2	1	.00	.0	.07	4.15			
			180.0	.07	16.75			
3	1	.00	.0	.07	16.75			
			24.0	.07	18.43			
4	1	.00	.0	-.29	18.43			
			24.0	-.29	11.54			
5	1	.00	.0	-.31	11.54			
			24.0	-.31	4.15			
6	1	.00	.0	-.17	4.15			
			24.0	-.17	.17			
7	1	.00	.0	-.04	.17			
			24.0	-.04	-.90			
8	1	.00	.0	.01	-.90			
			24.0	.01	-.64			
9	1	.00	.0	.02	-.64			
			24.0	.02	-.22			
10	1	.00	.0	.01	-.22			
			24.0	.01	.00			
11	1	.00	.0	.00	.00			
			24.0	.00	.04			
12	1	.00	.0	.00	.04			
			24.0	.00	.02			

POWER ROAD BRIDGE AT QUEEN CREEK, LONG. FRAME, Q100 FLOW

F R A M E E L E M E N T F O R C E S

ELT ID	LOAD COND	AXIAL FORCE	DIST ENDI	1-2 PLANE SHEAR	1-2 PLANE MOMENT	1-3 PLANE SHEAR	1-3 PLANE MOMENT	AXIAL TORQ
13	1	.00	.0	.00	.02			
			36.0	.00	.00			

STRUCTURAL CALCULATIONS

FOR

HIGLEY ROAD BRIDGE

OVER

QUEEN CREEK

Registered Professional Engineer (Structural)
CERTIFICATE NO.
14766
ROBERT DAVIS
TURTON
Date Signed 7/9/96
ARIZONA, U.S.A.

Cannon & Associates, Inc.
Consulting Engineers

project no. : CA 94046-1
project : HIGLEY RD. @ QUEEN CRK
designed by : JB
checked by : HM
date : 5/96 sht. 1 of 22

BASIS OF ANALYSIS

DESIGN SPECIFICATION

American Association of State Highway and Transportation Officials Standard Specifications for Highway Bridges, 1992 Edition, revised to date.

EXISTING BRIDGE PLANS

As-built bridge plan sheets 1A, 2, 4, 5, 6, and 7 dated May 1964. Higley Road Bridge over Queen Creek Channel, Project No. S-296(3).

GEOTECHNICAL INVESTIGATION

Geotechnical Investigation Report by AGRA Earth & Environmental, Inc., Job No. E95-36, dated 4/15/96. Ultimate downward capacity of driven pile foundations were used with a safety factor of 1.0 under critical flow conditions.

HYDRAULIC DATA

Final Scour Analysis Report by Morrison-Maierle/CSSA, Inc. Dated March 1996.
$Q_{low\ chord}$ = 3910 cfs, Average Velocity = 3.1 ft/sec., Angle of Attack = 20 degrees
HW Elev. = 1329.66 (Bridge open to Traffic)
Total Scour = 20'

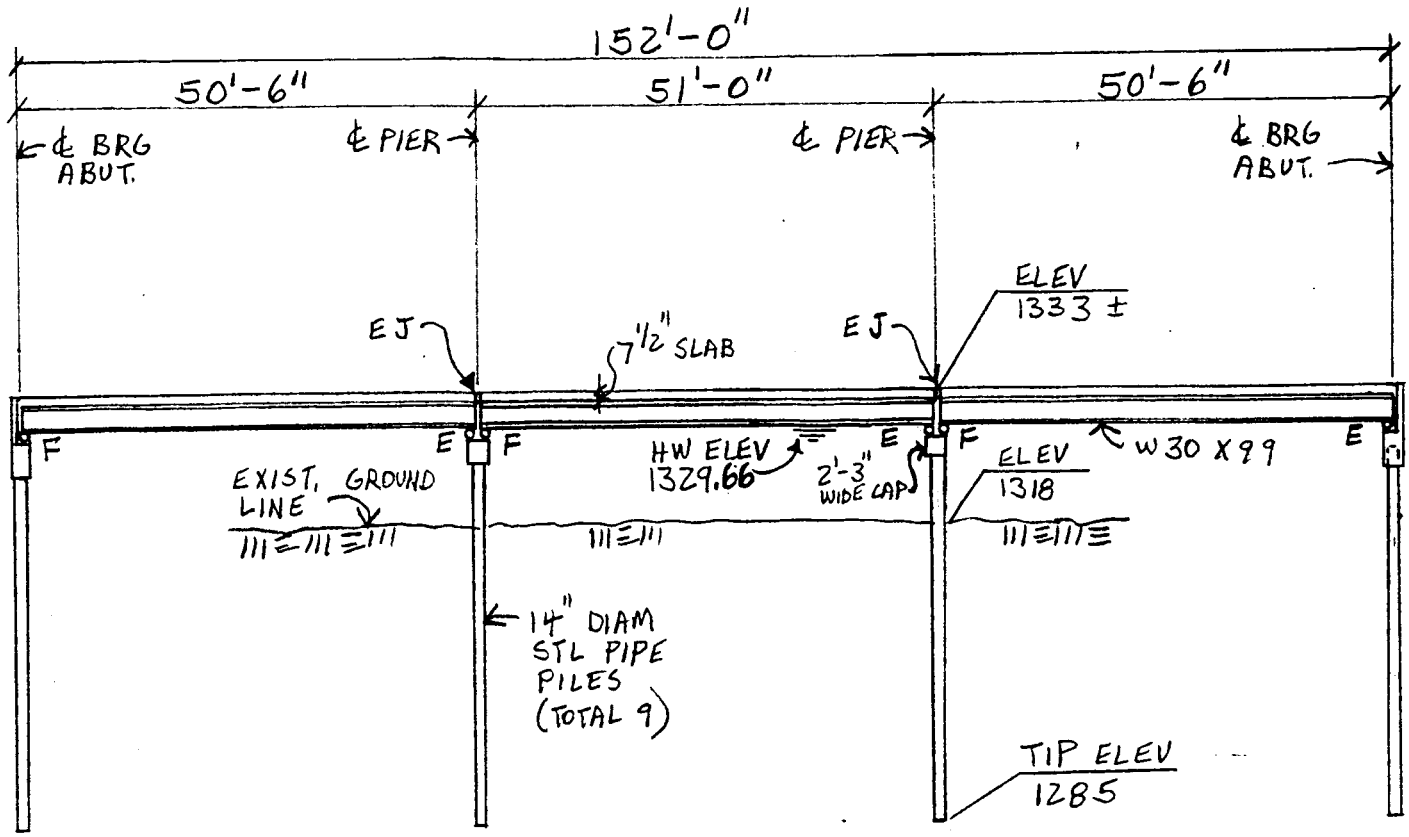

SECTION @ CONST. ℄

THREE SPAN STEEL GIRDER BRIDGE

SKEW = 40°

Cannon & Associates, Inc.
Consulting Engineers

project no. : CA 94046-1
project : HIGLEY RD @ QUEEN CREEK
designed by : TB
checked by : HM
date : 5/96 sht. 3 of 22

PIER ANALYSIS

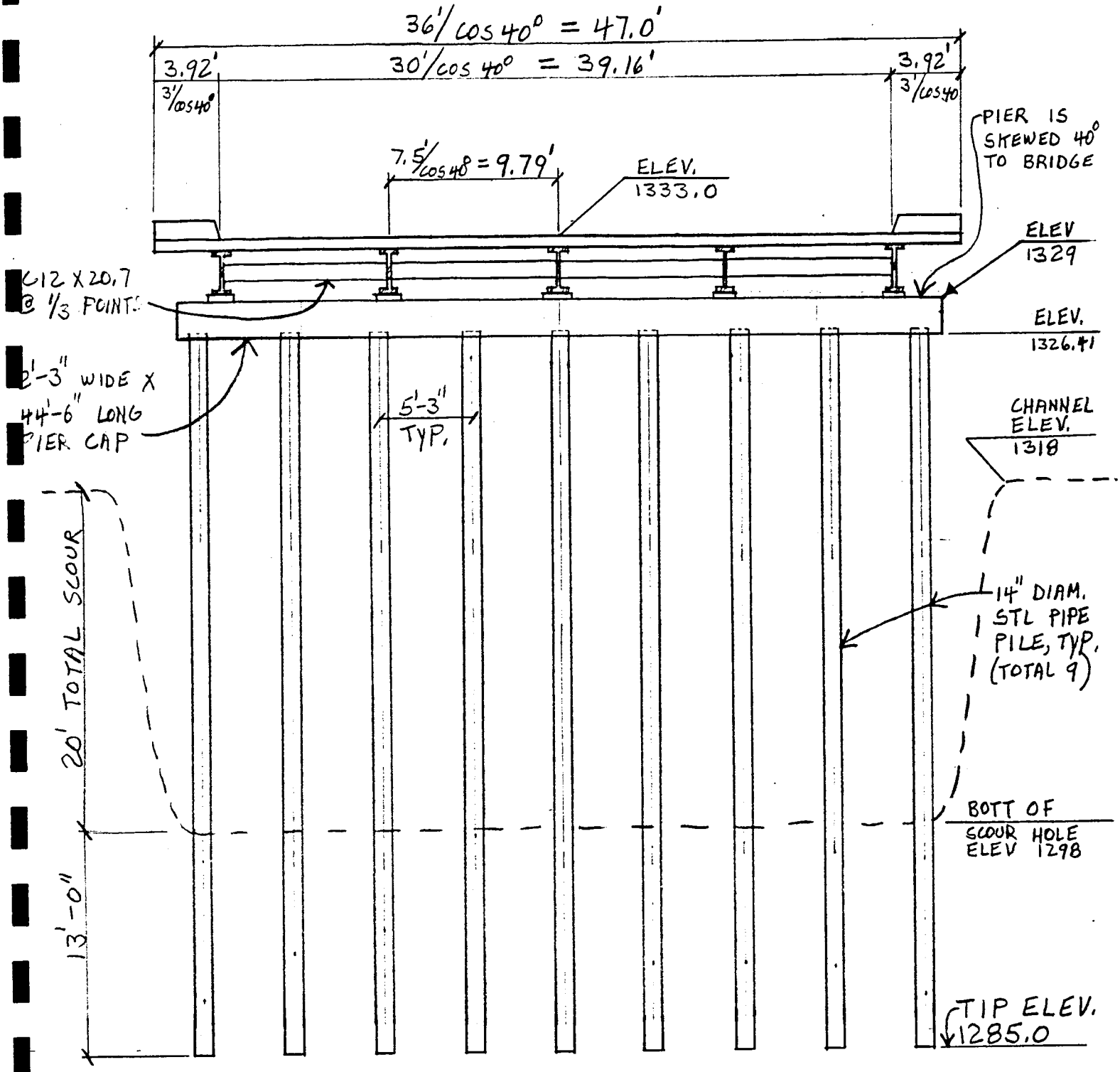

PIER ELEVATION

Cannon & Associates, Inc.
Consulting Engineers

project no. : CA 94046-1
project : HIGLEY RD @ QUEEN CRK
designed by : TB
checked by : HM
date : 5/96 sht. 4 of 22

PIER ANALYSIS, CONT.

DEAD LOAD SUPERSTRUCTURE

DECK : $7\frac{1}{2}''/12''/' (36')(.15^{k}/ft^3) = 3.4^{k/'}$

CURB : $1'(3')(.15^{k}/ft^3)(2 \text{ CURBS}) = 0.9$

HANDRAIL: USE $0.1^{k}/ft = 0.1$

GIRDERS: $(W30 \times 99)\ 99^{\#}/'(5)\frac{1}{1000} = 0.5$

DIAPHRAGMS: $(C12 \times 20.7)[20.7(30')(6')/152']/1000 = 0.02$

MISC. : $= 0.08$

$DL = 5.0^{k}/ft$

PIER LOADS

DEAD LOAD

SUPERSTRUCTURE REACTION: $5.0^{k/'}(50.75') = 253.8^{k}$

PIER CAP: $2.25'(2.59')(44.5')(.15^{k}/ft^3) = 38.9^{k}$

$DL = 292.7^{k}$

APPROX. DEAD LOADS PER PILE: (TO SCOUR LINE)

$DL_{PILE} = 292.7^{k}/9 \text{ PILES} + \frac{\pi(14''/12)^2}{4}(28.41')(.15^{k}/ft^3) = 37.1^{k}/\text{PILE}$

LIVE LOAD HS20 2 LANES

$LL = \left[32^{k} + 32^{k}\left(\frac{37}{51}\right) + 8^{k}\left(\frac{36.5'}{50.5'}\right)\right] 2 \text{ LANES} = 122^{k}$

APPROX. LL PER PILE $= 122^{k}/9 \text{ PILES} = 13.6^{k}/\text{PILE}$

$\text{IMPACT} = \frac{50}{51+125} = 0.28$

PIER ANALYSIS, CONT.

CHECK CAPACITY OF PILES BASED ON SOIL CAPACITY

SERVICE DEAD LOAD = 37.1^k
SERVICE LIVE LOAD = 13.6^k
50.7^k

ULTIMATE PILE CAPACITY = $72^k > 50.7^k$ O.K.
(SEE AGRA CHART, SHT 9)

∴ CHECK LATERAL STABILITY

DETERMINE COMPOSITE PROPERTIES OF PILES:

PILES PER AHD STD DRAWING CP-6. SEE COMPUTER ANALYSIS
ASSUME UNION METAL.

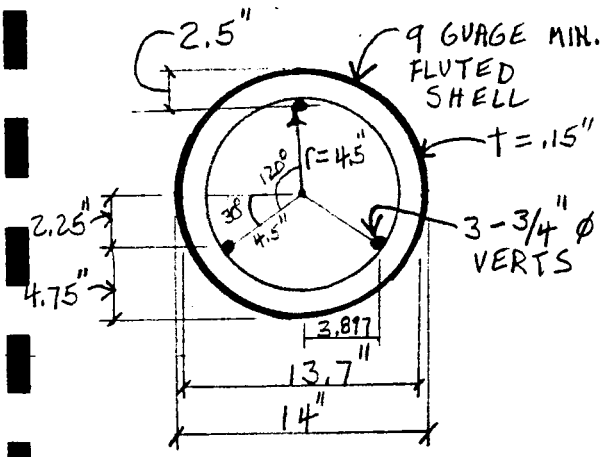

STEEL SHELL: (AHD STD. DRWG CP-6)

$F_y = 30^{KSI}$ (ASSUMED ASTM A252 GD 2)
$E = 29{,}000^{KSI}$

$A_{SHELL} = \pi(14''^2 - 13.7''^2)/4 = 6.53\ in^2$

$I_{SHELL} = \pi(14''^4 - 13.7''^4)/64 = 156.5\ in^4$

$r_{shell} = \sqrt{I/A} = \sqrt{\frac{156.5}{6.53\ in^2}} = 4.90''$

$Z = \left(\frac{14''^3 - 13.7''^3}{6}\right) = 28.77\ in^3$

PIER ANALYSIS CONT.

COMPOSITE PROPERTIES OF PILES, CONT.

CONCRETE: $f_c' = 3000^{psi}$ PER A.H.D. CP-6 CLASS D CONC.

$E_c = 57\sqrt{3000} = 3122^{ksi}$

$A_c = \pi(13.7'')^2/4 = 147.4 \text{ in}^2$

$I_c = \pi(13.7'')^4/64 = 1729.2 \text{ in}^4$

REINF. STEEL: $f_y = 40^{ksi}$ (ASSUMED)

$E_r = 29{,}000^{ksi}$

$A_r = 3(.44 \text{ in}^2) = 1.32 \text{ in}^2$

$I_r = \overset{0}{I_i} + Ad^2$

$= 0.44\text{in}^2(4.5'')^2 + .44\text{in}^2(2.25')^2(2)$

$I_{r_x} = 13.37 \text{ in}^4$

$I_{r_y} = 2(.44 \text{ in}^2)(3.897'')^2 = 13.37 \text{ in}^2$

COMPOSITE SECTION: $A = \pi(14'')^2/4 = 153.9 \text{ in}^2$

$A_{shell}/A = \frac{6.53 \text{ in}^2}{153.9 \text{ in}^2} = 4.2\% > 4\%$ O.K.

$E_m = E_s + C_3 E_c A_c/A_{SHELL}$ (LRFD EQN I 2-2; P. 6-52)

$E_m = 29000^{ksi} + 0.4(3122^{ksi})\frac{147.4 \text{ in}^2}{6.53 \text{ in}^2} = 57{,}189 \text{ KSI}$

$EI = E_s(I_r + I_s) + C_3 E_c I_c/(1 + \overset{\approx 0}{M_d/M_u})$

$EI = 29000^{ksi}(13.37 \text{in}^4 + 156.5 \text{in}^4) + 0.4(3122^{ksi})(1729 \text{in}^4)/1.0$

$EI = 7{,}085{,}405 \text{ k-in}^2 \quad I_m = \frac{EI}{E_m} = 124 \text{ in}^4$

PIER ANALYSIS, CONT.

PILE SLENDERNESS (LONGITUDINAL DIRECTION CONTROLS)

$E_m = 57{,}189^{ksi}$

$r_m = r_{SHELL} = 4.90'' > 0.3(14'') = 4.20''$

$F_{my} = F_y + C_1 F_{yr}(A_r/A_s) + C_2 f_c'(A_c/A_s)$ (LRFD EQN I2-1; P. 6-52)

$F_{my} = 30^{ksi} + 1.0(40^{ksi})\left(\frac{1.32 in^2}{6.53 in^2}\right) + 0.85(3^{ksi})\left(\frac{147.4}{6.53}\right)$

$F_{my} = 95.6^{ksi}$

LRFD EQN E2-4

$\lambda_c = \frac{k\ell}{r_m \pi}\sqrt{\frac{F_{my}}{E_m}} = \frac{2.1(28.41')(12''/')}{4.9''(\pi)}\sqrt{\frac{95.6^{ksi}}{57{,}189^{ksi}}} = 1.90 > 1.5$

$F_{cr} = \left[\frac{0.877}{(\lambda_c)^2}\right]F_{my} = \left[\frac{0.877}{(1.90)^2}\right]95.6^{ksi} = 23.2^{ksi}$

$P_n = A_s F_{cr}$ $\phi = 0.85$

$\phi P_n = 0.85(6.53 in^2)(23.2^{ksi}) = 128.8^{k}$

PIER ANALYSIS, CONT.

Project Higley Road Bridge Job No. E95-36

FIGURE 9

ESTIMATED ULTIMATE DOWNWARD CAPACITY OF DRIVEN, PIPE PILES

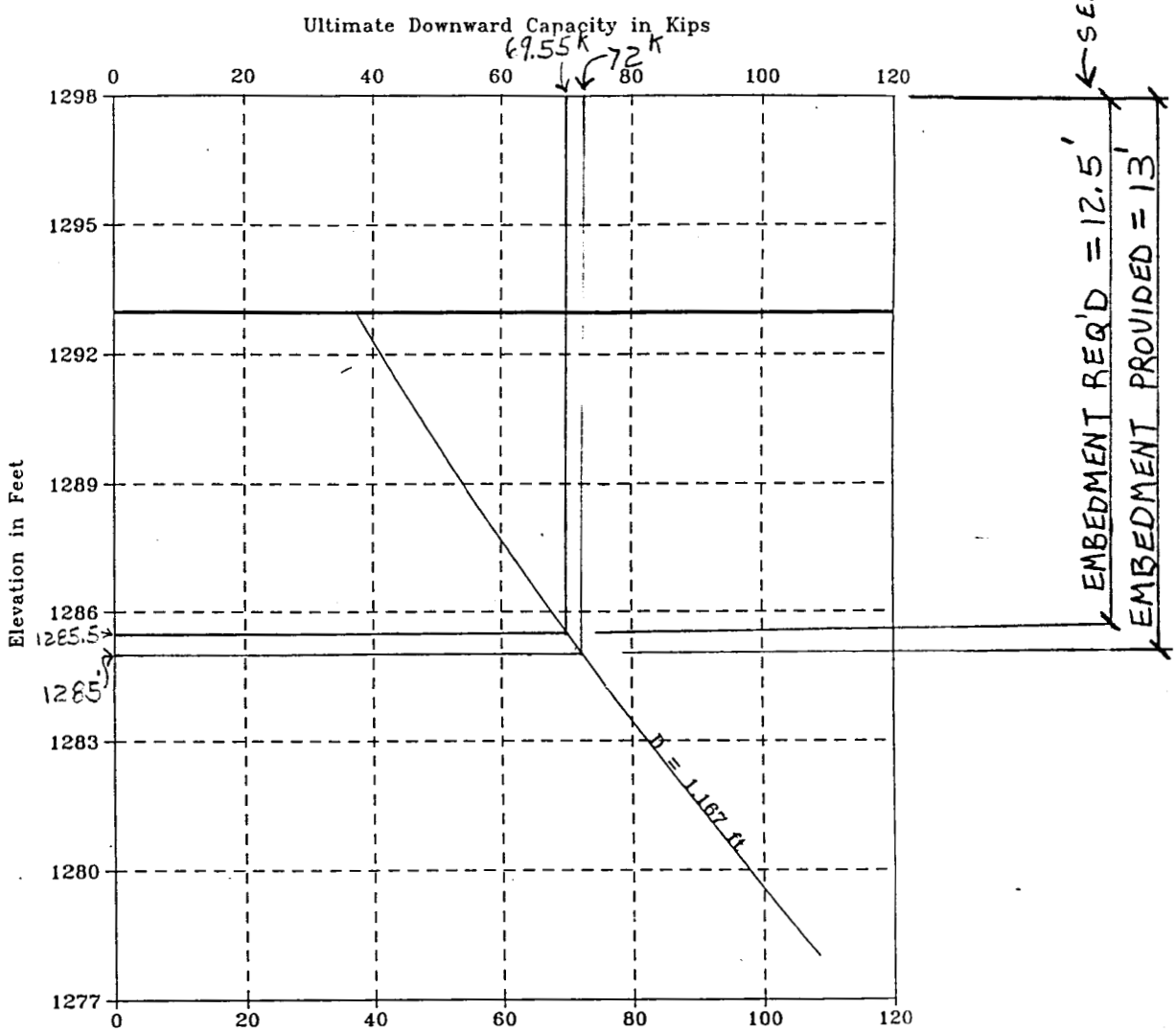

AGRA
Earth & Environmental, Inc.

REFERENCE: GEOTECHNICAL INVESTIGATION REPORT
AGRA EARTH & ENVIRONMENTAL, INC.
JOB NO. E95-36 DATED 4/15/96

Cannon & Associates, Inc.
Consulting Engineers

project no. : CA 94046-1
project : HIGLEY RD @ QUEEN CRK
designed by : TB
checked by : HM
date : 5/96 sht. 9 of ≥2

PIER ANALYSIS, CONT.

PIER CAP SUPERIMPOSED LOADS

DEAD LOAD:

$$\text{DEAD LOAD PER GIRDER} = \frac{253.8^k}{5 \text{ GIRDERS}} = 50.8^k/\text{GIRDER}$$

LIVE LOAD: HS20 2 LANES

$$\text{WHEEL LOAD REACTION} = 61.0^k/\text{LANE}\left(\tfrac{1}{2}\right) = 30.5^k$$

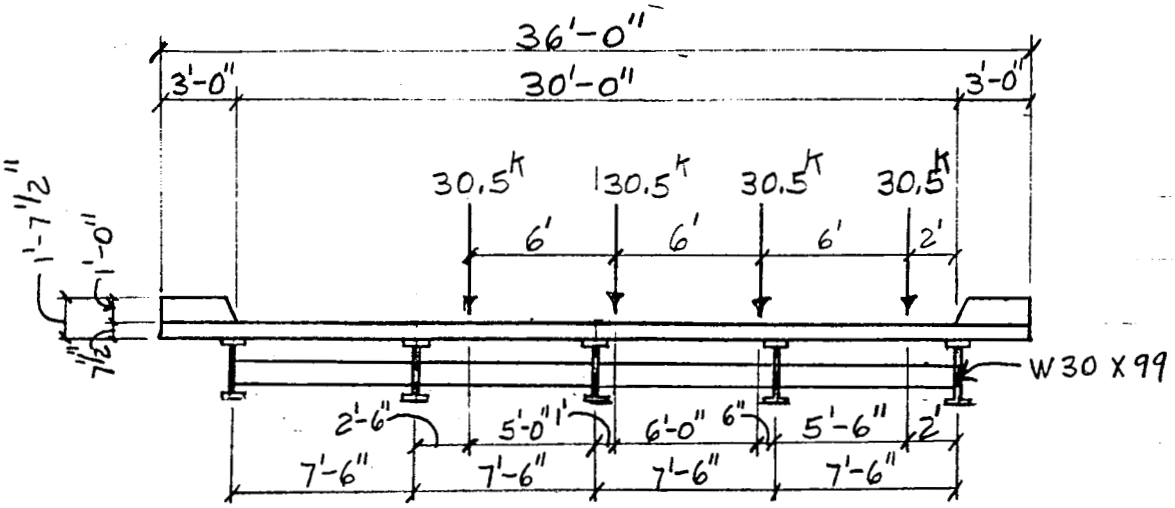

GIRDER REACTIONS:

$$G_1 = 0$$

$$G_2 = 30.5^k\left(\frac{5.0'}{7.5'}\right) = 20.3^k$$

$$G_3 = 30.5^k\left[\frac{2.5}{7.5} + \frac{6.5}{7.5} + \frac{1.5}{7.5}\right] = 38.6^k$$

$$G_4 = 30.5^k\left[\frac{1}{7.5} + \frac{7}{7.5} + \frac{2}{7.5}\right] = 40.7^k$$

$$G_5 = 30.5^k\left[\frac{5.5}{7.5}\right] = 22.4^k$$

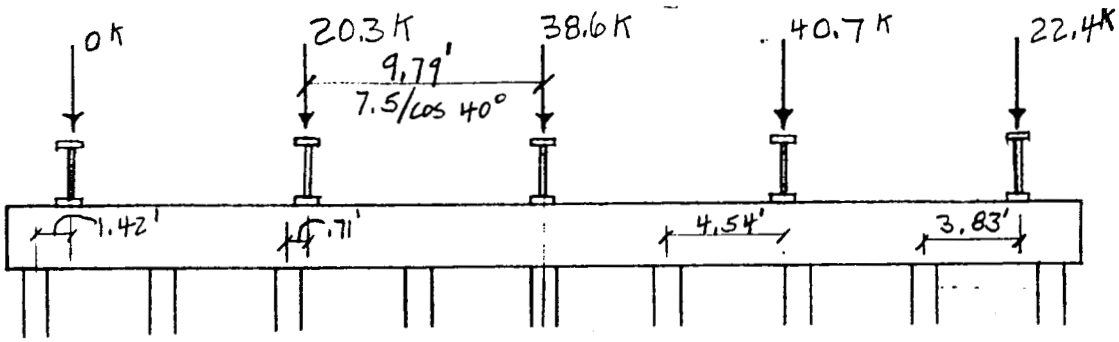

PIER ANALYSIS, CONT.

LATERAL ANALYSIS

STREAM FLOW FORCES

$Q_{LOW\ CHORD}$ FLOW CONDITIONS
HW ELEVATION = 1329.66
ANGLE OF ATTACK = 20° ⇒ FOR ANALYSIS USE 25° (ATTACK ∡ PLUS 5°)
TOTAL SCOUR = 20'
AVERAGE VELOCITY = 3.1 FT/SEC

STREAM FLOW CRITERIA

- SHAFT CLEAR SPACING = 3.92', ASSUME TOTAL BLOCKAGE BETWEEN PILES. USE OBSTRUCTION WIDTH BASED ON PROJECTED AREA AT 25° WITH 2 FT OF DEBRIS EACH SIDE OF PROJECTED AREA.
- ASSUME TOTAL STREAM FORCE IS EQUALLY DISTRIBUTED TO EACH PILE
- USE K = 1.4 FOR PILES WITH DEBRIS
- ASSUME DEBRIS EXTENDS FROM HW ELEVATION TO EXISTING GRADE.

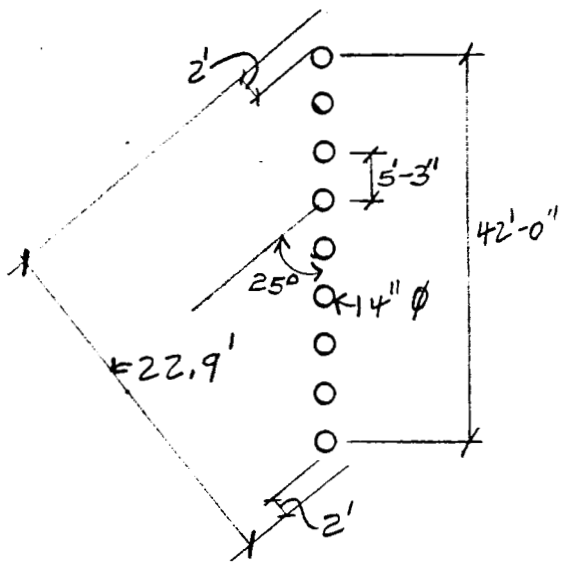

PROJECTED WIDTH

$42' \sin 25° + 14''/12 + 2(2') = 22.9'$

PIER ANALYSIS, CONT.

STREAM FLOW CONT.

$$P_{max} = 2\,P_{AVG} = 2(1.4)(3.1\,\text{ft/sec})^2 \frac{1}{1000} = 0.0269\ \text{K/ft}^2$$

$$\Delta P = \frac{0.0269}{11.66'} = 0.0023\ \text{KSF/ft}$$

SF1 $= 0.0269\ \text{K/ft}^2 (22.9') = 0.62\ \text{K/l}$

SF2 $= [.0269 - 3.25'(.0023)]\ 22.9' = 0.44$

SF3 $= [.0269 - 5.25'(.0023)]\ 22.9' = 0.34$

SF4 $= [.0269 - 7.25'(.0023)]\ 22.9' = 0.23$

SF5 $= [.0269 - 9.25'(.0023)]\ 22.9' = 0.13$

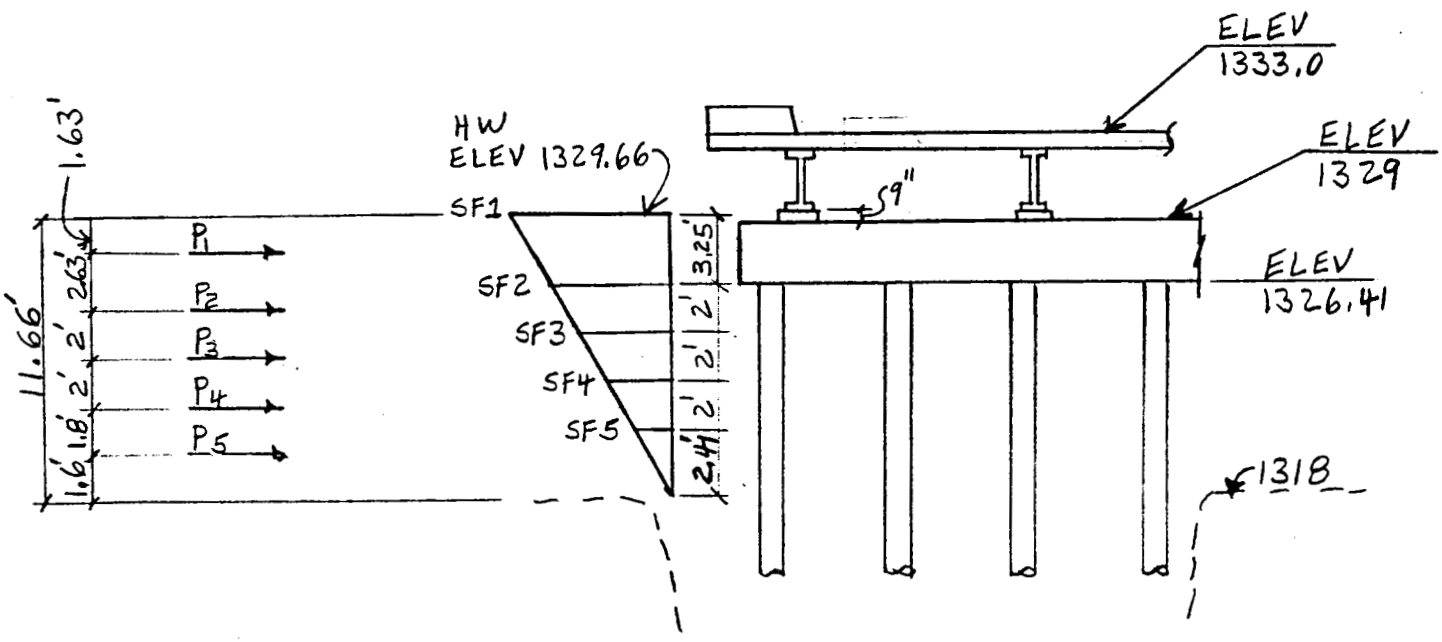

PIER ANALYSIS, CONT.

STREAM FLOW, CONT.

EQUIVALENT CONCENTRATED LOADS FROM STREAM FORCE ON PIER:

$P_1 = (0.62^{k/1} + 0.44^{k/1})\ 1/2\ (3.25') = 1.72^k$
$P_2 = (0.44 + 0.34)\ 1/2\ (2') = 0.78$
$P_3 = (0.34 + 0.23)\ 1/2\ (2') = 0.57$
$P_4 = (0.23 + 0.13)\ 1/2\ (2') = 0.36$
$P_5 = 1/2(.13)(2.41') = 0.16$

RESOLVE TOTAL FORCES INTO LONGITUDINAL AND TRANSVERSE DIRECTIONS AND DIVIDE EVENLY BETWEEN PILES: COS 25° = 0.906
SIN 25° = 0.423

$P_{1T} = 1.72^k(.906)/9$ PILES	$= 0.17^{k/PILE}$	$P_{1L} = 0.08^{k/PILE}$
$P_{2T} = 0.78(.906)/9$	$= 0.08$	$P_{2L} = 0.04$
$P_{3T} = 0.57(.906)/9$	$= 0.06$	$P_{3L} = 0.03$
$P_{4T} = 0.36(.906)/9$	$= 0.04$	$P_{4L} = 0.02$
$P_{5T} = 0.16(.906)/9$	$= 0.02$	$P_{5L} = 0.01$
	$0.37^{k/PILE}$	$0.18^{k/PILE}$

SEE COMPUTER ANALYSIS FOR MODELS AND RESULTS.

PIER ANALYSIS, CONT.

RESULTS FROM TRANSVERSE FRAME ANALYSIS:

TOP OF PILE: (MEM. 65)

$P_{DL} = -38.33^k$ $P_{LL} = -26.83^k$ $P_{SF} = .09$

$M_{DL} = -0.09^{1-k}$ $M_{LL} = -0.08^{1-k}$ $M_{SF} = -6.0^{1-k}$

BOTT. OF PILE: (PT. OF MAX MOM.) MEM. 68

$P_{DL} = -42.81^k$ $P_{LL} = -26.83^k$ $P_{SF} = .09^k$

$M_{DL} = .03^{1-k}$ $M_{LL} = .02^{1-k}$ $M_{SF} = 4.80^{1-k}$

RESULTS FROM LONGITUDINAL FRAME ANALYSIS

TOP OF PILE: $P_{SF} = 0$ $M_{SF} = 0$

BOTT. OF PILE: (Pt. OF MAX. MOM) MEM. 4 $P_{SF} = 0$ $M_{SF} = 5.28^{1-k}$

CHECK PILE CAPACITY BASED ON STRENGTH OF SOIL:

$P_{TL} = 42.81^k + 26.83^k - .09^k = 69.55^k$

PILE TIP ELEVATION = 1285'

ULTIMATE PILE CAPACITY = $72^k > 69.55^k$ O.K.

EMBEDMENT DEPTH PROVIDED = 1298' - 1285' = 13'

EMBEDMENT DEPTH REQUIRED = 1298' - 1285.5' = 12.5' < 13' O.K.

(See Sheet 9, AGRA Chart)

PIER ANALYSIS, CONT.

CHECK PILE CAPACITY BASED ON STRENGTH OF PILES:

USE GROUP VII LOADING + LIVE LOAD + IMPACT:

$$1.3\left[\beta_D D + \beta_{L+I} L + \beta_E \cancel{E}^{0} + 1.0\cancel{B}^{0} + 1.0\,SF\right]$$

USE $\beta_D = 1.0$, $\beta_{L+I} = 1.0$ $E = 0$ $B = 0$

$$P_U = 1.3\left[1.0(42.81^k) + 1.0(1.28)(26.83^k) - 1.0(.09^k)\right] = 100.2^k$$

$$M_{U_T} = 1.3\left[1.0(.03) + 1.0(1.28)(.02) + 1.0(4.80)\right] = 6.31^{1-k}$$

$$M_{U_L} = 1.3\left[1.0(5.28)\right] = 6.86^{1-k}$$

DETERMINE MOMENT CAPACITY OF PILES: (LRFD 6-175)

$$M_n = M_p = ZF_y + \tfrac{1}{3}(h_2 - 2c_r)A_r F_{yr} + \left(\frac{h_2}{2} - \frac{A_w F_y}{1.7 f_c' h_1}\right)\cancel{A_w F_y}^{0}$$

$$Z = 28.77\ in^3 \quad F_y = 30^{ksi} \quad h_2 = 14'' \quad c_r = \frac{4.75 + 2.5}{2} = 3.6''$$

$$A_r = 3\ \#6 = 1.32\ in^2 \quad F_{yr} = 40^{ksi}$$

$$M_n = 28.77\ in^3(30\ ksi) + \tfrac{1}{3}(14'' - 2(3.6''))(1.32\ in^2)(40^{ksi})$$

$$M_n = 982.78^{k\text{-}in} = 81.9^{1-k} \Rightarrow \phi M_n = 0.9(81.9^{1-k}) = 73.7^{1-k}$$

CHECK UNITY EQUATION (LRFD 6-47)

$\phi P_n = 128.8^k$ (SHT 8) $\quad \frac{P_U}{\phi P_n} = \frac{100.2^k}{128.8^k} = 0.78 > 0.2 \Rightarrow$ USE EQN H1-1a

$$\frac{P_U}{\phi P_n} + \frac{8}{9}\left(\frac{M_{UT}}{\phi M_{n_T}} + \frac{M_{UL}}{\phi M_{n_L}}\right) \leq 1.0$$

$$\frac{100.2^k}{128.8^k} + \frac{8}{9}\left(\frac{6.31^{1-k}}{73.7} + \frac{6.86^{1-k}}{73.7}\right) = 0.94 < 1.0 \quad \underline{\underline{O.K.}}$$

SUMMARY OF RESULTS

PILES ARE VERTICALLY AND LATERALLY STABLE FOR $Q_{LOW\ CHORD}$ FLOW CONDITIONS

COMPUTER ANALYSIS

COMPUTER MODELS

TRANSVERSE PIER FRAME MODEL

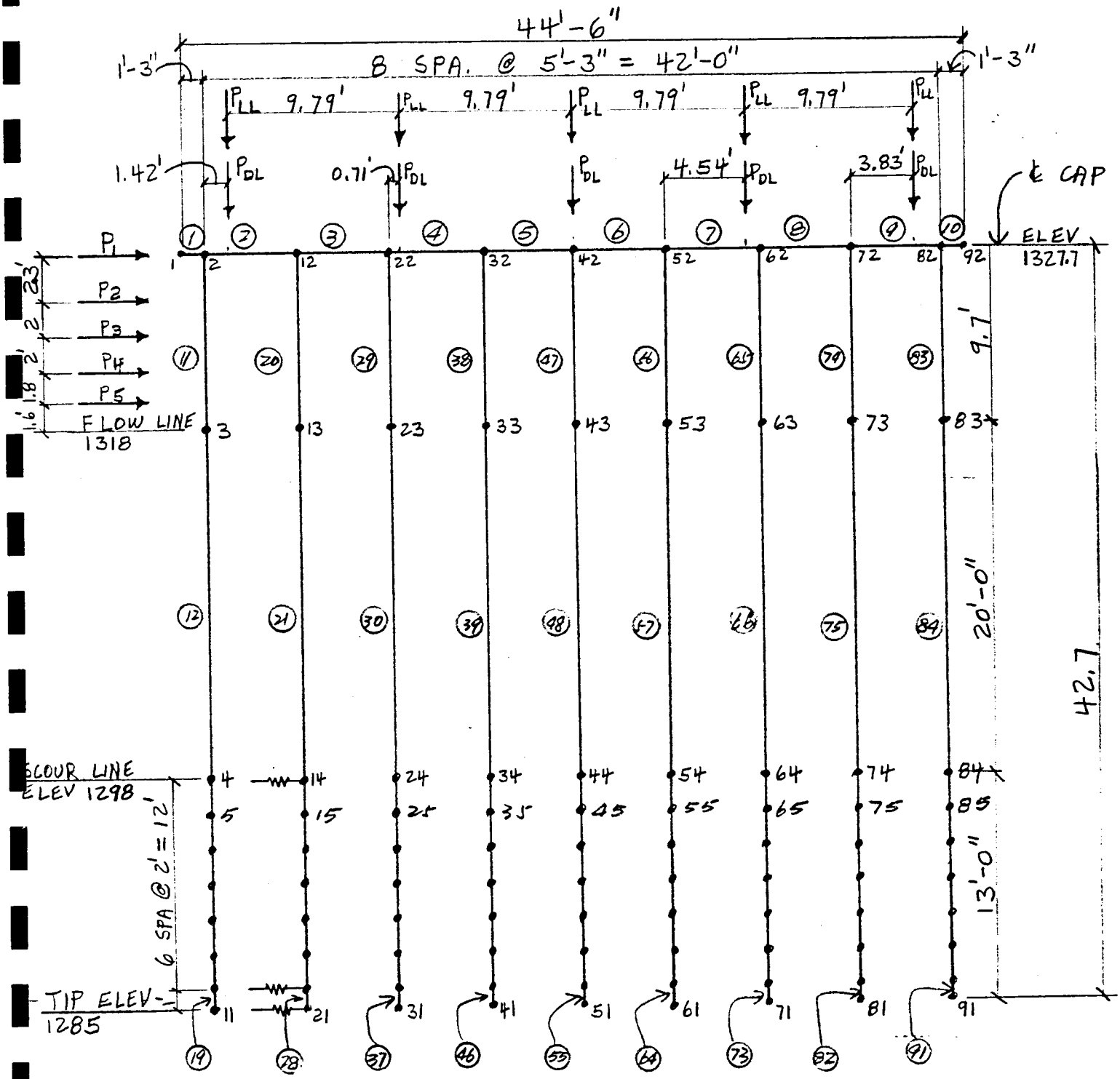

Cannon & Associates, Inc.
Consulting Engineers

project no. : CA 94046-1
project : HIGLEY RD @ QUEEN CR/T
designed by : JB
checked by : HM
date : 5/96 sht. 18 of 22

COMPUTER MODELS

LONGITUDINAL PIER FRAME MODEL

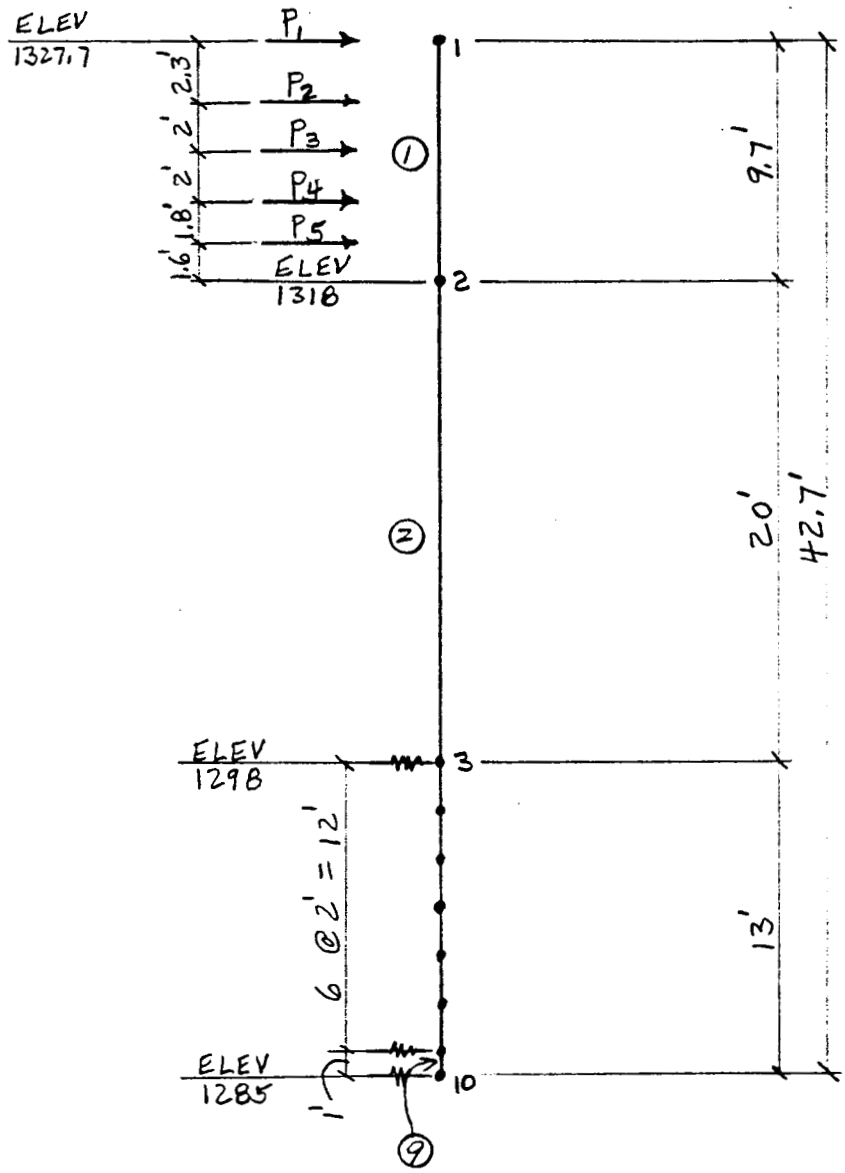

COMPUTER MODELS

SECTION PROPERTIES

$I_{CAP} = 1/12(27'')(31.08'')^3 = 67,550 \text{ in}^3$

$E_{CAP} = 57,000\sqrt{2500^{psi}} = 2,850 \text{ ksi}$

$A_{CAP} = 27''(31.08'') = 839 \text{ in}^2$

$w_{CAP} = \frac{27''(31.08'')}{144}(.15 \text{ k/ft}^3) = 0.87 \text{ k/l} = 0.0728 \text{ k/in}$

$I_{PILE} = 124 \text{ in}^4$

$E_{PILE} = 57,189 \text{ ksi}$ $\quad w_{PILE} = 0.160 \text{ k/l} = 0.0134 \text{ k/in}$

SPRING CONSTANTS SEE AGRA CHART - 1/2" CURVE

SPRING CONSTANT = K(PILE WIDTH)(NODE SPACING)
= K(14")(24")

DEPTH BELOW SCOUR LINE (FT)	SUBGRADE MODULUS (PCI)	SPRING CONSTANT K/IN
0	0	0
2	68	23(.75) = 17
4	130	44(.75) = 33
6	164	55(.75) = 41
8	195	66(.75) = 50
10	223	75(.75) = 56
12	247 (14")(18")	62(.75) = 47
13	259 (14")(6")	22(.75) = 17

GROUP ACTION REDUCTION AS RECOMMENDED BY AGRA EARTH & ENVIRONMENTAL

COMPUTER MODELS

Figure 20 - Higley Road
14-inch Pipe Pile

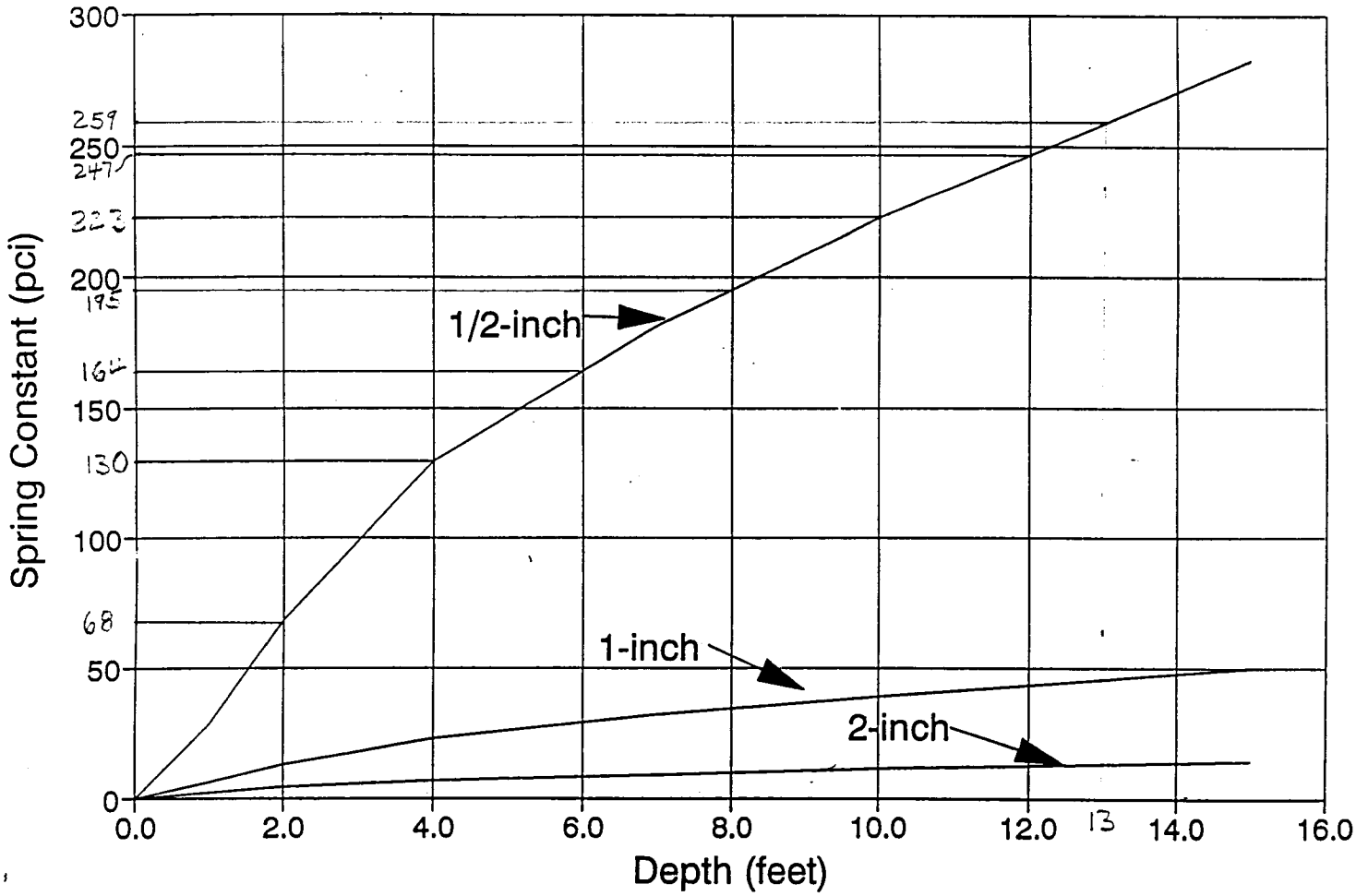

REFERENCE: SUBGRADE MODULUS CHART PER AGRA EARTH & ENVIRONMENTAL, INC. JOB NO. E95-36, DATED 4/15/96

Cannon & Associates, Inc.
Consulting Engineers

project no. : CA 94046-1
project : HIGLEY RD @ QUEEN CRK
designed by : TR
checked by : HM
date : 6/96 sht. 21 of 22

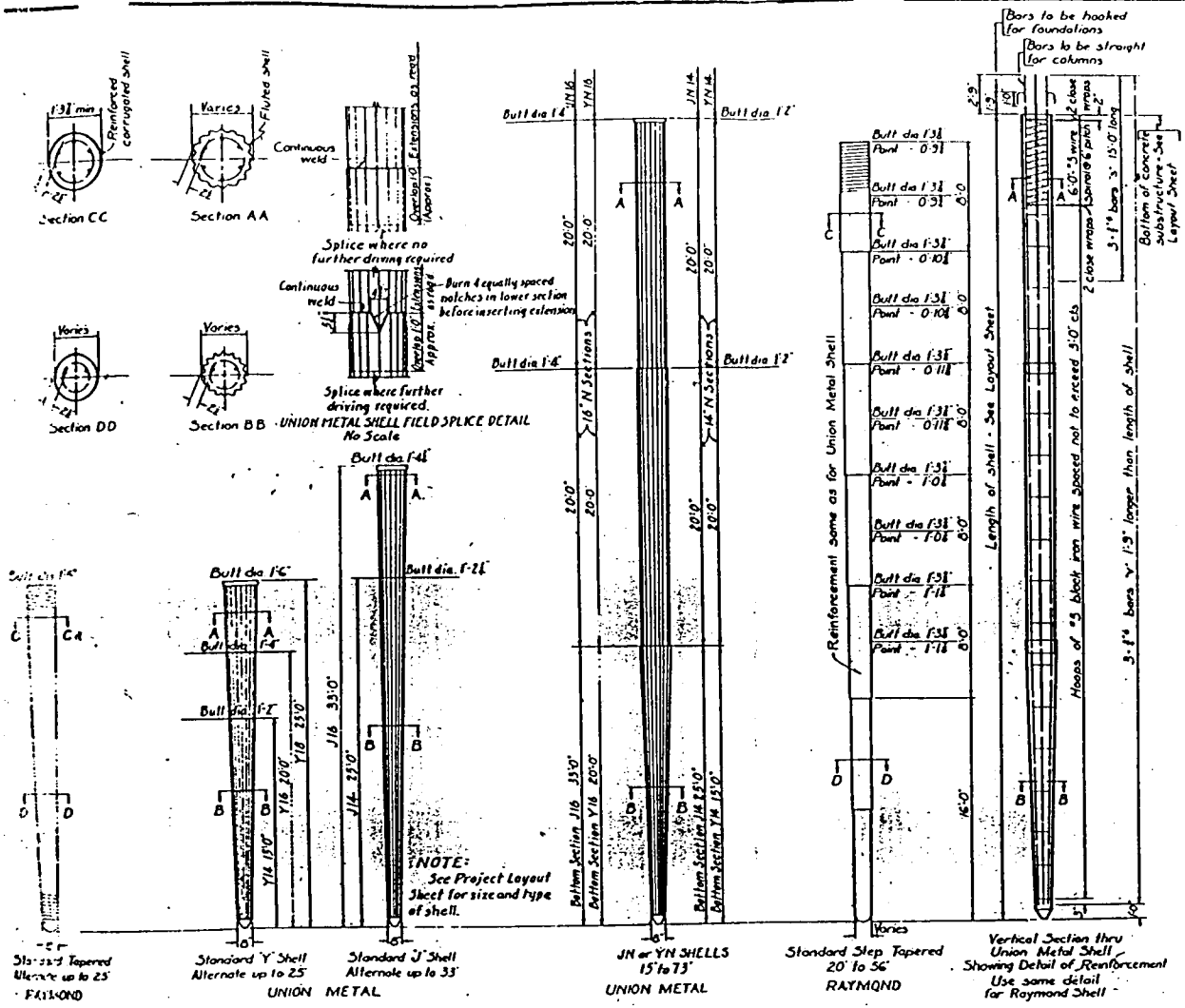

PRECAST CONCRETE PILES

	Bending Point	Length of Pile - L	14" Pile Bar Size	14" Pile Conc Class A A CY	16" Pile Bar Size	16" Pile Conc Class A A CY	18" Pile Bar Size	18" Pile Conc Class A A CY
Double Sling @ ¼ Points		60					1¼	392
		58					-	378
		56					-	364
		54			1¼	218	-	351
		52			-	267	1¼	337
		50			-	256	-	323
		48			-	245	-	309
		46			1¼	235	-	295
		44			-	224	-	282
		42	1¼	164	-	213	-	260
		40	-	156	-	202	-	254
		38	-	148	-	191	-	240
		36	-	139	-	180	-	226
		34	-	131	-	169	-	213
		32	-	122	-	158	-	199
Single Sling @ ½ Point		30	-	114	-	147	-	185
		28	-	106	-	136	-	171
		26	-	97	-	125	-	157
		24	-	89	-	115	-	144
		22	-	81	-	104	-	130
		20	-	72	-	93	-	116

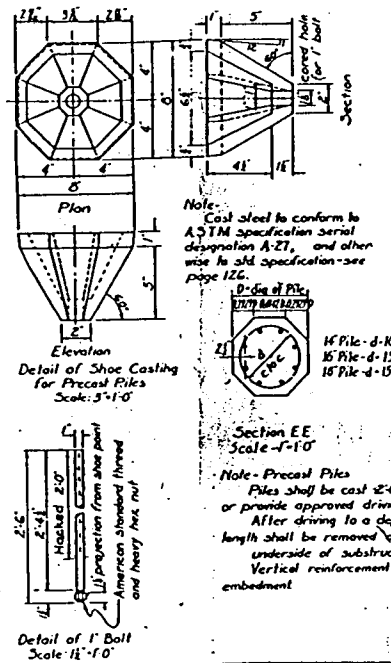

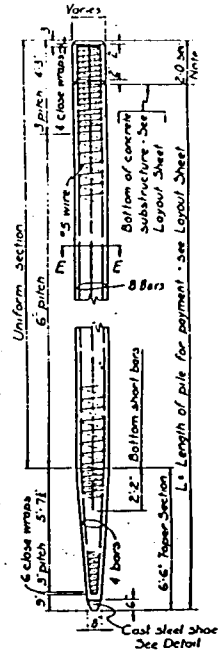

Note - Precast Piles
Piles shall be cast 2'-0" longer than net required length L, or provide approved driving head.
After driving to a depth satisfactory to Engineer, the excess length shall be removed and the top trimmed to 2" above underside of substructure, and the pile edges beveled.
Vertical reinforcement shall be cut off to provide 1'-9" embedment.

GENERAL NOTES:

Driving conditions at each job shall control shell gauge which shall be determined by the contractor except as follows-
Union shell minimum thickness 9 gauge unless otherwise shown. Shells shall be manufacturers standard basic OH steel, tensile strength not less than 50,000 lbs/sq in. Manufacturers standard driving mandrel shall be furnished if required by driving conditions to prevent collapse or distortion. Shells shall be driven only with manufacturers standard driving head.

Raymond shell minimum thickness 20 gauge reinforced with ¼" wire spiraled at 3" pitch. Shells shall be manufacturers standard sheet steel and spiral reinforcing shall be hard drawn wire.
Mill inspection of all shells shall conform to Standard Specification - see page 127.
All shells shall be filled with Class D concrete internally vibrated.
Trestle bent piles shall be 15" butt dia. minimum.

Precast piles shall conform to Std. Specification - see Page 179. Shoes as per detail shall be provided ONLY where shown on project plans.
All concrete shall be Class A-A internally vibrated.
Measurement and payment - see Construction Special Provisions.

Drawn	R.A.M.		Date 8/61
Checked			
Approved			
Approved			
Approved			
Approved	R.A.M.		
Orig. Date			
Revised			

ALBERTA HIGHWAY DEPARTMENT
BRIDGE DIVISION
STANDARD

PILE DETAILS
PRECAST & CAST IN PLACE
FOUNDATION OR TRESTLE BENTS

CP 6

SHT. 22 of 22

HIGLEY ROAD BRIDGE AT QUEEN CREEK, TRANS. FRAME, Q Low Chord FLOW

F R A M E E L E M E N T F O R C E S

ELT ID	LOAD COND	AXIAL FORCE	DIST ENDI	1-2 PLANE SHEAR	1-2 PLANE MOMENT	1-3 PLANE SHEAR	1-3 PLANE MOMENT	AXIAL TORQ
1								
	1	.00						
			.0	.00	.00			
			15.0	-1.09	-8.19			
	2	.00						
			.0	.00	.00			
			15.0	.00	.00			
	3	.00						
			.0	.00	.00			
			15.0	.00	.00			
2								
	1	-.01						
			.0	34.58	-10.64			
			17.0	33.34	568.03			
			63.0	-20.81	-311.37			
	2	.00						
			.0	-.70	-.01			
			63.0	-.70	-44.29			
	3	.00						
			.0	-1.70	72.61			
			63.0	-1.70	-34.27			
3								
	1	.00						
			.0	7.76	-310.12			
			63.0	3.18	34.57			
	2	.00						
			.0	1.28	-44.76			
			63.0	1.28	35.92			
	3	.00						
			.0	-1.22	38.73			
			63.0	-1.22	-38.21			
4								
	1	-.01						
			.0	40.73	33.47			
			8.5	40.11	377.84			
			63.0	-14.66	-312.62			
	2	.00						
			.0	14.35	35.36			
			8.5	14.35	157.61			
			63.0	-5.95	-166.60			
	3	.00						
			.0	-1.13	34.80			
			63.0	-1.13	-36.63			
5								
	1	-.01						
			.0	10.86	-312.24			
			63.0	6.28	227.72			
	2	.00						
			.0	5.79	-166.97			
			63.0	5.79	198.03			
	3	.00						
			.0	-1.16	36.36			

HIGLEY ROAD BRIDGE AT QUEEN CREEK, TRANS. FRAME, Q Low Chord FLOW

F R A M E E L E M E N T F O R C E S

ELT ID	LOAD COND	AXIAL FORCE	DIST ENDI	1-2 PLANE SHEAR	1-2 PLANE MOMENT	1-3 PLANE SHEAR	1-3 PLANE MOMENT	AXIAL TORQ
			63.0	-1.16	-36.49			
6								
	1	-.01						
			.0	44.52	227.72			
			63.0	-10.86	-312.24			
	2	.00						
			.0	31.80	197.99			
			63.0	-6.80	-230.21			
	3	.00						
			.0	-1.16	36.49			
			63.0	-1.16	-36.36			
7								
	1	-.01						
			.0	14.66	-312.62			
			54.5	10.69	377.84			
			63.0	-40.73	33.47			
	2	-.01						
			.0	10.16	-230.59			
			54.5	10.16	322.80			
			63.0	-30.54	62.58			
	3	.00						
			.0	-1.13	36.63			
			63.0	-1.13	-34.80			
8								
	1	.00						
			.0	-3.18	34.57			
			63.0	-7.76	-310.12			
	2	.00						
			.0	-3.71	63.56			
			63.0	-3.71	-170.02			
	3	.00						
			.0	-1.22	38.21			
			63.0	-1.22	-38.73			
9								
	1	-.01						
			.0	20.81	-311.37			
			46.0	17.46	568.03			
			63.0	-34.58	-10.64			
	2	.00						
			.0	8.74	-170.13			
			46.0	8.74	231.72			
			63.0	-13.66	-.99			
	3	.00						
			.0	-1.70	34.27			
			63.0	-1.70	-72.61			
10								
	1	.00						
			.0	1.09	-8.19			
			15.0	.00	.00			
	2	.00						
			.0	.00	.00			
			15.0	.00	.00			

HIGLEY ROAD BRIDGE AT QUEEN CREEK, TRANS. FRAME, Q Low Chord FLOW

F R A M E E L E M E N T F O R C E S

ELT ID	LOAD COND	AXIAL FORCE	DIST ENDI	1-2 PLANE SHEAR	1-2 PLANE MOMENT	1-3 PLANE SHEAR	1-3 PLANE MOMENT	AXIAL TORQ
	3	.00						
			.0	.00	.00			
			15.0	.00	.00			
11								
	1	-36.45						
			.0	-.01	2.45			
			116.4	-.01	1.49			
	2	.70						
			.0	.00	.01			
			116.4	.00	.01			
	3	1.70						
			.0	.17	-72.61			
			27.6	.17	-67.94			
			51.6	.25	-61.97			
			75.6	.31	-54.55			
			97.2	.35	-47.01			
			116.4	.37	-39.93			
20								
	1	-29.35						
			.0	.00	-1.24			
			116.4	.00	-.76			
	2	-1.98						
			.0	.00	.47			
			116.4	.00	.28			
	3	-.48						
			.0	.17	-73.00			
			27.6	.17	-68.30			
			51.6	.25	-62.29			
			75.6	.31	-54.85			
			97.2	.35	-47.28			
			116.4	.37	-40.17			
29								
	1	-38.33						
			.0	.00	1.10			
			116.4	.00	.67			
	2	-13.07						
			.0	.00	.56			
			116.4	.00	.34			
	3	-.09						
			.0	.17	-73.01			
			27.6	.17	-68.31			
			51.6	.25	-62.30			
			75.6	.31	-54.85			
			97.2	.35	-47.28			
			116.4	.37	-40.17			
38								
	1	-26.30						
			.0	.00	-.38			
			116.4	.00	-.23			
	2	-11.74						
			.0	.00	.37			
			116.4	.00	.22			

HIGLEY ROAD BRIDGE AT QUEEN CREEK, TRANS. FRAME, Q Low Chord FLOW

F R A M E E L E M E N T F O R C E S

ELT ID	LOAD COND	AXIAL FORCE	DIST ENDI	1-2 PLANE SHEAR	1-2 PLANE MOMENT	1-3 PLANE SHEAR	1-3 PLANE MOMENT	AXIAL TORQ
	3	.02						
			.0	.17	-72.99			
			27.6	.17	-68.29			
			51.6	.25	-62.28			
			75.6	.31	-54.84			
			97.2	.35	-47.27			
			116.4	.37	-40.16			
47								
	1	-39.02						
			.0	.00	.00			
			116.4	.00	.00			
	2	-26.01						
			.0	.00	.05			
			116.4	.00	.03			
	3	.00						
			.0	.17	-72.99			
			27.6	.17	-68.29			
			51.6	.25	-62.28			
			75.6	.31	-54.84			
			97.2	.35	-47.27			
			116.4	.37	-40.16			
56								
	1	-26.30						
			.0	.00	.38			
			116.4	.00	.23			
	2	-16.95						
			.0	.00	.38			
			116.4	.00	.23			
	3	-.02						
			.0	.17	-72.99			
			27.6	.17	-68.29			
			51.6	.25	-62.28			
			75.6	.31	-54.84			
			97.2	.35	-47.27			
			116.4	.37	-40.16			
65								
	1	-38.33						
			.0	.00	-1.10			
			116.4	.00	-.67			
	2	-26.83						
			.0	.00	-.98			
			116.4	.00	-.60			
	3	.09						
			.0	.17	-73.01			
			27.6	.17	-68.31			
			51.6	.25	-62.30			
			75.6	.31	-54.85			
			97.2	.35	-47.28			
			116.4	.37	-40.17			
74								
	1	-29.35						
			.0	.00	1.24			

HIGLEY ROAD BRIDGE AT QUEEN CREEK, TRANS. FRAME, Q Low Chord FLOW

F R A M E E L E M E N T F O R C E S

ELT ID	LOAD COND	AXIAL FORCE	DIST ENDI	1-2 PLANE SHEAR	1-2 PLANE MOMENT	1-3 PLANE SHEAR	1-3 PLANE MOMENT	AXIAL TORQ
			116.4	.00	.76			
	2	-12.45						
			.0	.00	.12			
			116.4	.00	.07			
	3	.48						
			.0	.17	-73.00			
			27.6	.17	-68.30			
			51.6	.25	-62.29			
			75.6	.31	-54.85			
			97.2	.35	-47.28			
			116.4	.37	-40.17			
83	----------							
	1	-36.45						
			.0	.01	-2.45			
			116.4	.01	-1.49			
	2	-13.66						
			.0	.00	-.99			
			116.4	.00	-.60			
	3	-1.70						
			.0	.17	-72.61			
			27.6	.17	-67.94			
			51.6	.25	-61.97			
			75.6	.31	-54.55			
			97.2	.35	-47.01			
			116.4	.37	-39.93			
12	----------							
	1	-38.84						
			.0	-.01	1.49			
			240.0	-.01	-.48			
	2	.70						
			.0	.00	.01			
			240.0	.00	.00			
	3	1.70						
			.0	.37	-39.93			
			240.0	.37	48.63			
21	----------							
	1	-31.74						
			.0	.00	-.76			
			240.0	.00	.24			
	2	-1.98						
			.0	.00	.28			
			240.0	.00	-.09			
	3	-.48						
			.0	.37	-40.17			
			240.0	.37	48.70			
30	----------							
	1	-40.72						
			.0	.00	.67			
			240.0	.00	-.22			
	2	-13.07						
			.0	.00	.34			
			240.0	.00	-.11			

HIGLEY ROAD BRIDGE AT QUEEN CREEK, TRANS. FRAME, Q Low Chord FLOW

F R A M E E L E M E N T F O R C E S

ELT ID	LOAD COND	AXIAL FORCE	DIST ENDI	1-2 PLANE SHEAR	1-2 PLANE MOMENT	1-3 PLANE SHEAR	1-3 PLANE MOMENT	AXIAL TORQ
	3	-.09						
			.0	.37	-40.17			
			240.0	.37	48.70			
39								
	1	-28.69						
			.0	.00	-.23			
			240.0	.00	.07			
	2	-11.74						
			.0	.00	.22			
			240.0	.00	-.07			
	3	.02						
			.0	.37	-40.16			
			240.0	.37	48.70			
48								
	1	-41.41						
			.0	.00	.00			
			240.0	.00	.00			
	2	-26.01						
			.0	.00	.03			
			240.0	.00	-.01			
	3	.00						
			.0	.37	-40.16			
			240.0	.37	48.70			
57								
	1	-28.69						
			.0	.00	.23			
			240.0	.00	-.07			
	2	-16.95						
			.0	.00	.23			
			240.0	.00	-.08			
	3	-.02						
			.0	.37	-40.16			
			240.0	.37	48.70			
66								
	1	-40.72						
			.0	.00	-.67			
			240.0	.00	.22			
	2	-26.83						
			.0	.00	-.60			
			240.0	.00	.19			
	3	.09						
			.0	.37	-40.17			
			240.0	.37	48.70			
75								
	1	-31.74						
			.0	.00	.76			
			240.0	.00	-.24			
	2	-12.45						
			.0	.00	.07			
			240.0	.00	-.03			
	3	.48						
			.0	.37	-40.17			

HIGLEY ROAD BRIDGE AT QUEEN CREEK, TRANS. FRAME, Q Low Chord FLOW

F R A M E E L E M E N T F O R C E S

ELT ID	LOAD COND	AXIAL FORCE	DIST ENDI	1-2 PLANE SHEAR	1-2 PLANE MOMENT	1-3 PLANE SHEAR	1-3 PLANE MOMENT	AXIAL TORQ
			240.0	.37	48.70			
84								
	1	-38.84						
			.0	.01	-1.49			
			240.0	.01	.48			
	2	-13.66						
			.0	.00	-.60			
			240.0	.00	.19			
	3	-1.70						
			.0	.37	-39.93			
			240.0	.37	48.63			
13								
	1	-40.61						
			.0	-.01	-.48			
			24.0	-.01	-.68			
	2	.70						
			.0	.00	.00			
			24.0	.00	-.01			
	3	1.70						
			.0	.37	48.63			
			24.0	.37	57.48			
14								
	1	-40.93						
			.0	.00	-.68			
			24.0	.00	-.71			
	2	.70						
			.0	.00	-.01			
			24.0	.00	.00			
	3	1.70						
			.0	-.08	57.48			
			24.0	-.08	55.61			
15								
	1	-41.25						
			.0	.01	-.71			
			24.0	.01	-.58			
	2	.70						
			.0	.00	.00			
			24.0	.00	.00			
	3	1.70						
			.0	-.51	55.61			
			24.0	-.51	43.34			
16								
	1	-41.57						
			.0	.01	-.58			
			24.0	.01	-.37			
	2	.70						
			.0	.00	.00			
			24.0	.00	.00			
	3	1.70						
			.0	-.69	43.34			
			24.0	-.69	26.79			

HIGLEY ROAD BRIDGE AT QUEEN CREEK, TRANS. FRAME, Q Low Chord FLOW

F R A M E E L E M E N T F O R C E S

ELT ID	LOAD COND	AXIAL FORCE	DIST ENDI	1-2 PLANE SHEAR	1-2 PLANE MOMENT	1-3 PLANE SHEAR	1-3 PLANE MOMENT	AXIAL TORQ
17								
	1	-41.89						
			.0	.01	-.37			
			24.0	.01	-.16			
	2	.70						
			.0	.00	.00			
			24.0	.00	.00			
	3	1.70						
			.0	-.64	26.79			
			24.0	-.64	11.38			
18								
	1	-42.22						
			.0	.01	-.16			
			24.0	.01	-.02			
	2	.70						
			.0	.00	.00			
			24.0	.00	.00			
	3	1.70						
			.0	-.41	11.38			
			24.0	-.41	1.46			
19								
	1	-42.46						
			.0	.00	-.02			
			12.0	.00	.00			
	2	.70						
			.0	.00	.00			
			12.0	.00	.00			
	3	1.70						
			.0	-.12	1.46			
			12.0	-.12	.00			
28								
	1	-35.36						
			.0	.00	.01			
			12.0	.00	.00			
	2	-1.98						
			.0	.00	.00			
			12.0	.00	.00			
	3	-.48						
			.0	-.12	1.46			
			12.0	-.12	.00			
37								
	1	-44.34						
			.0	.00	-.01			
			12.0	.00	.00			
	2	-13.07						
			.0	.00	.00			
			12.0	.00	.00			
	3	-.09						
			.0	-.12	1.46			
			12.0	-.12	.00			
46								
	1	-32.31						

HIGLEY ROAD BRIDGE AT QUEEN CREEK, TRANS. FRAME, Q Low Chord FLOW

F R A M E E L E M E N T F O R C E S

ELT ID	LOAD COND	AXIAL FORCE	DIST ENDI	1-2 PLANE SHEAR	1-2 PLANE MOMENT	1-3 PLANE SHEAR	1-3 PLANE MOMENT	AXIAL TORQ
			.0	.00	.00			
			12.0	.00	.00			
	2	-11.74						
			.0	.00	.00			
			12.0	.00	.00			
	3	.02						
			.0	-.12	1.46			
			12.0	-.12	.00			
55								
	1	-45.03						
			.0	.00	.00			
			12.0	.00	.00			
	2	-26.01						
			.0	.00	.00			
			12.0	.00	.00			
	3	.00						
			.0	-.12	1.46			
			12.0	-.12	.00			
64								
	1	-32.31						
			.0	.00	.00			
			12.0	.00	.00			
	2	-16.95						
			.0	.00	.00			
			12.0	.00	.00			
	3	-.02						
			.0	-.12	1.46			
			12.0	-.12	.00			
73								
	1	-44.34						
			.0	.00	.01			
			12.0	.00	.00			
	2	-26.83						
			.0	.00	.01			
			12.0	.00	.00			
	3	.09						
			.0	-.12	1.46			
			12.0	-.12	.00			
82								
	1	-35.36						
			.0	.00	-.01			
			12.0	.00	.00			
	2	-12.45						
			.0	.00	.00			
			12.0	.00	.00			
	3	.48						
			.0	-.12	1.46			
			12.0	-.12	.00			
91								
	1	-42.46						
			.0	.00	.02			
			12.0	.00	.00			

HIGLEY ROAD BRIDGE AT QUEEN CREEK, TRANS. FRAME, Q Low Chord FLOW

F R A M E E L E M E N T F O R C E S

ELT ID	LOAD COND	AXIAL FORCE	DIST ENDI	1-2 PLANE SHEAR	1-2 PLANE MOMENT	1-3 PLANE SHEAR	1-3 PLANE MOMENT	AXIAL TORQ
	2	-13.66						
			.0	.00	.01			
			12.0	.00	.00			
	3	-1.70						
			.0	-.12	1.46			
			12.0	-.12	.00			
22								
	1	-33.51						
			.0	.00	.24			
			24.0	.00	.34			
	2	-1.98						
			.0	.00	-.09			
			24.0	.00	-.13			
	3	-.48						
			.0	.37	48.70			
			24.0	.37	57.59			
23								
	1	-33.83						
			.0	.00	.34			
			24.0	.00	.36			
	2	-1.98						
			.0	.00	-.13			
			24.0	.00	-.14			
	3	-.48						
			.0	-.08	57.59			
			24.0	-.08	55.73			
24								
	1	-34.15						
			.0	.00	.36			
			24.0	.00	.30			
	2	-1.98						
			.0	.00	-.14			
			24.0	.00	-.11			
	3	-.48						
			.0	-.51	55.73			
			24.0	-.51	43.44			
25								
	1	-34.47						
			.0	.00	.30			
			24.0	.00	.19			
	2	-1.98						
			.0	.00	-.11			
			24.0	.00	-.07			
	3	-.48						
			.0	-.69	43.44			
			24.0	-.69	26.85			
26								
	1	-34.79						
			.0	.00	.19			
			24.0	.00	.08			
	2	-1.98						
			.0	.00	-.07			

HIGLEY ROAD BRIDGE AT QUEEN CREEK, TRANS. FRAME, Q Low Chord FLOW

F R A M E E L E M E N T F O R C E S

ELT ID	LOAD COND	AXIAL FORCE	DIST ENDI	1-2 PLANE SHEAR	1-2 PLANE MOMENT	1-3 PLANE SHEAR	1-3 PLANE MOMENT	AXIAL TORQ
			24.0	.00	-.03			
	3	-.48						
			.0	-.64	26.85			
			24.0	-.64	11.41			
27								
	1	-35.12						
			.0	.00	.08			
			24.0	.00	.01			
	2	-1.98						
			.0	.00	-.03			
			24.0	.00	.00			
	3	-.48						
			.0	-.41	11.41			
			24.0	-.41	1.46			
31								
	1	-42.49						
			.0	.00	-.22			
			24.0	.00	-.30			
	2	-13.07						
			.0	.00	-.11			
			24.0	.00	-.16			
	3	-.09						
			.0	.37	48.70			
			24.0	.37	57.59			
32								
	1	-42.81						
			.0	.00	-.30			
			24.0	.00	-.32			
	2	-13.07						
			.0	.00	-.16			
			24.0	.00	-.16			
	3	-.09						
			.0	-.08	57.59			
			24.0	-.08	55.73			
33								
	1	-43.13						
			.0	.00	-.32			
			24.0	.00	-.26			
	2	-13.07						
			.0	.00	-.16			
			24.0	.00	-.13			
	3	-.09						
			.0	-.51	55.73			
			24.0	-.51	43.44			
34								
	1	-43.45						
			.0	.00	-.26			
			24.0	.00	-.17			
	2	-13.07						
			.0	.00	-.13			
			24.0	.00	-.09			
	3	-.09						

HIGLEY ROAD BRIDGE AT QUEEN CREEK, TRANS. FRAME, Q Low Chord FLOW

F R A M E E L E M E N T F O R C E S

ELT ID	LOAD COND	AXIAL FORCE	DIST ENDI	1-2 PLANE SHEAR	1-2 PLANE MOMENT	1-3 PLANE SHEAR	1-3 PLANE MOMENT	AXIAL TORQ
			.0	-.69	43.44			
			24.0	-.69	26.85			
35								
	1	-43.77						
			.0	.00	-.17			
			24.0	.00	-.07			
	2	-13.07						
			.0	.00	-.09			
			24.0	.00	-.04			
	3	-.09						
			.0	-.64	26.85			
			24.0	-.64	11.41			
36								
	1	-44.10						
			.0	.00	-.07			
			24.0	.00	-.01			
	2	-13.07						
			.0	.00	-.04			
			24.0	.00	.00			
	3	-.09						
			.0	-.41	11.41			
			24.0	-.41	1.46			
40								
	1	-30.46						
			.0	.00	.07			
			24.0	.00	.10			
	2	-11.74						
			.0	.00	-.07			
			24.0	.00	-.10			
	3	.02						
			.0	.37	48.70			
			24.0	.37	57.59			
41								
	1	-30.78						
			.0	.00	.10			
			24.0	.00	.11			
	2	-11.74						
			.0	.00	-.10			
			24.0	.00	-.11			
	3	.02						
			.0	-.08	57.59			
			24.0	-.08	55.72			
42								
	1	-31.10						
			.0	.00	.11			
			24.0	.00	.09			
	2	-11.74						
			.0	.00	-.11			
			24.0	.00	-.09			
	3	.02						
			.0	-.51	55.72			
			24.0	-.51	43.43			

HIGLEY ROAD BRIDGE AT QUEEN CREEK, TRANS. FRAME, Q Low Chord FLOW

F R A M E E L E M E N T F O R C E S

ELT ID	LOAD COND	AXIAL FORCE	DIST ENDI	1-2 PLANE SHEAR	1-2 PLANE MOMENT	1-3 PLANE SHEAR	1-3 PLANE MOMENT	AXIAL TORQ
43								
	1	-31.42						
			.0	.00	.09			
			24.0	.00	.06			
	2	-11.74						
			.0	.00	-.09			
			24.0	.00	-.06			
	3	.02						
			.0	-.69	43.43			
			24.0	-.69	26.85			
44								
	1	-31.74						
			.0	.00	.06			
			24.0	.00	.03			
	2	-11.74						
			.0	.00	-.06			
			24.0	.00	-.02			
	3	.02						
			.0	-.64	26.85			
			24.0	-.64	11.41			
45								
	1	-32.07						
			.0	.00	.03			
			24.0	.00	.00			
	2	-11.74						
			.0	.00	-.02			
			24.0	.00	.00			
	3	.02						
			.0	-.41	11.41			
			24.0	-.41	1.46			
49								
	1	-43.18						
			.0	.00	.00			
			24.0	.00	.00			
	2	-26.01						
			.0	.00	-.01			
			24.0	.00	-.02			
	3	.00						
			.0	.37	48.70			
			24.0	.37	57.59			
50								
	1	-43.50						
			.0	.00	.00			
			24.0	.00	.00			
	2	-26.01						
			.0	.00	-.02			
			24.0	.00	-.02			
	3	.00						
			.0	-.08	57.59			
			24.0	-.08	55.72			
51								
	1	-43.82						

HIGLEY ROAD BRIDGE AT QUEEN CREEK, TRANS. FRAME, Q Low Chord FLOW

F R A M E E L E M E N T F O R C E S

ELT ID	LOAD COND	AXIAL FORCE	DIST ENDI	1-2 PLANE SHEAR	1-2 PLANE MOMENT	1-3 PLANE SHEAR	1-3 PLANE MOMENT	AXIAL TORQ
			.0	.00	.00			
			24.0	.00	.00			
	2	-26.01						
			.0	.00	-.02			
			24.0	.00	-.01			
	3	.00						
			.0	-.51	55.72			
			24.0	-.51	43.43			
52								
	1	-44.15						
			.0	.00	.00			
			24.0	.00	.00			
	2	-26.01						
			.0	.00	-.01			
			24.0	.00	-.01			
	3	.00						
			.0	-.69	43.43			
			24.0	-.69	26.85			
53								
	1	-44.47						
			.0	.00	.00			
			24.0	.00	.00			
	2	-26.01						
			.0	.00	-.01			
			24.0	.00	.00			
	3	.00						
			.0	-.64	26.85			
			24.0	-.64	11.41			
54								
	1	-44.79						
			.0	.00	.00			
			24.0	.00	.00			
	2	-26.01						
			.0	.00	.00			
			24.0	.00	.00			
	3	.00						
			.0	-.41	11.41			
			24.0	-.41	1.46			
58								
	1	-30.46						
			.0	.00	-.07			
			24.0	.00	-.10			
	2	-16.95						
			.0	.00	-.08			
			24.0	.00	-.11			
	3	-.02						
			.0	.37	48.70			
			24.0	.37	57.59			
59								
	1	-30.78						
			.0	.00	-.10			
			24.0	.00	-.11			

HIGLEY ROAD BRIDGE AT QUEEN CREEK, TRANS. FRAME, Q Low Chord FLOW

F R A M E E L E M E N T F O R C E S

ELT ID	LOAD COND	AXIAL FORCE	DIST ENDI	1-2 PLANE SHEAR	1-2 PLANE MOMENT	1-3 PLANE SHEAR	1-3 PLANE MOMENT	AXIAL TORQ
	2	-16.95						
			.0	.00	-.11			
			24.0	.00	-.11			
	3	-.02						
			.0	-.08	57.59			
			24.0	-.08	55.72			
60								
	1	-31.10						
			.0	.00	-.11			
			24.0	.00	-.09			
	2	-16.95						
			.0	.00	-.11			
			24.0	.00	-.09			
	3	-.02						
			.0	-.51	55.72			
			24.0	-.51	43.43			
61								
	1	-31.42						
			.0	.00	-.09			
			24.0	.00	-.06			
	2	-16.95						
			.0	.00	-.09			
			24.0	.00	-.06			
	3	-.02						
			.0	-.69	43.43			
			24.0	-.69	26.85			
62								
	1	-31.74						
			.0	.00	-.06			
			24.0	.00	-.03			
	2	-16.95						
			.0	.00	-.06			
			24.0	.00	-.03			
	3	-.02						
			.0	-.64	26.85			
			24.0	-.64	11.41			
63								
	1	-32.07						
			.0	.00	-.03			
			24.0	.00	.00			
	2	-16.95						
			.0	.00	-.03			
			24.0	.00	.00			
	3	-.02						
			.0	-.41	11.41			
			24.0	-.41	1.46			
67								
	1	-42.49						
			.0	.00	.22			
			24.0	.00	.30			
	2	-26.83						
			.0	.00	.19			

HIGLEY ROAD BRIDGE AT QUEEN CREEK, TRANS. FRAME, Q Low Chord FLOW

F R A M E E L E M E N T F O R C E S

ELT ID	LOAD COND	AXIAL FORCE	DIST ENDI	1-2 PLANE SHEAR	1-2 PLANE MOMENT	1-3 PLANE SHEAR	1-3 PLANE MOMENT	AXIAL TORQ
			24.0	.00	.27			
	3	.09						
			.0	.37	48.70			
			24.0	.37	57.59			
68								
	1	-42.81						
			.0	.00	.30			
			24.0	.00	.32			
	2	-26.83						
			.0	.00	.27			
			24.0	.00	.28			
	3	.09						
			.0	-.08	57.59			
			24.0	-.08	55.73			
69								
	1	-43.13						
			.0	.00	.32			
			24.0	.00	.26			
	2	-26.83						
			.0	.00	.28			
			24.0	.00	.23			
	3	.09						
			.0	-.51	55.73			
			24.0	-.51	43.44			
70								
	1	-43.45						
			.0	.00	.26			
			24.0	.00	.17			
	2	-26.83						
			.0	.00	.23			
			24.0	.00	.15			
	3	.09						
			.0	-.69	43.44			
			24.0	-.69	26.85			
71								
	1	-43.77						
			.0	.00	.17			
			24.0	.00	.07			
	2	-26.83						
			.0	.00	.15			
			24.0	.00	.06			
	3	.09						
			.0	-.64	26.85			
			24.0	-.64	11.41			
72								
	1	-44.10						
			.0	.00	.07			
			24.0	.00	.01			
	2	-26.83						
			.0	.00	.06			
			24.0	.00	.01			
	3	.09						

HIGLEY ROAD BRIDGE AT QUEEN CREEK, TRANS. FRAME, Q Low Chord FLOW

F R A M E E L E M E N T F O R C E S

ELT ID	LOAD COND	AXIAL FORCE	DIST ENDI	1-2 PLANE SHEAR	1-2 PLANE MOMENT	1-3 PLANE SHEAR	1-3 PLANE MOMENT	AXIAL TORQ
			.0	-.41	11.41			
			24.0	-.41	1.46			
76								
	1	-33.51						
			.0	.00	-.24			
			24.0	.00	-.34			
	2	-12.45						
			.0	.00	-.03			
			24.0	.00	-.04			
	3	.48						
			.0	.37	48.70			
			24.0	.37	57.59			
77								
	1	-33.83						
			.0	.00	-.34			
			24.0	.00	-.36			
	2	-12.45						
			.0	.00	-.04			
			24.0	.00	-.04			
	3	.48						
			.0	-.08	57.59			
			24.0	-.08	55.73			
78								
	1	-34.15						
			.0	.00	-.36			
			24.0	.00	-.30			
	2	-12.45						
			.0	.00	-.04			
			24.0	.00	-.03			
	3	.48						
			.0	-.51	55.73			
			24.0	-.51	43.44			
79								
	1	-34.47						
			.0	.00	-.30			
			24.0	.00	-.19			
	2	-12.45						
			.0	.00	-.03			
			24.0	.00	-.02			
	3	.48						
			.0	-.69	43.44			
			24.0	-.69	26.85			
80								
	1	-34.79						
			.0	.00	-.19			
			24.0	.00	-.08			
	2	-12.45						
			.0	.00	-.02			
			24.0	.00	-.01			
	3	.48						
			.0	-.64	26.85			
			24.0	-.64	11.41			

HIGLEY ROAD BRIDGE AT QUEEN CREEK, TRANS. FRAME, Q Low Chord FLOW

F R A M E E L E M E N T F O R C E S

ELT ID	LOAD COND	AXIAL FORCE	DIST ENDI	1-2 PLANE SHEAR	1-2 PLANE MOMENT	1-3 PLANE SHEAR	1-3 PLANE MOMENT	AXIAL TORQ
81								
	1	-35.12						
			.0	.00	-.08			
			24.0	.00	-.01			
	2	-12.45						
			.0	.00	-.01			
			24.0	.00	.00			
	3	.48						
			.0	-.41	11.41			
			24.0	-.41	1.46			
85								
	1	-40.61						
			.0	.01	.48			
			24.0	.01	.68			
	2	-13.66						
			.0	.00	.19			
			24.0	.00	.27			
	3	-1.70						
			.0	.37	48.63			
			24.0	.37	57.48			
86								
	1	-40.93						
			.0	.00	.68			
			24.0	.00	.71			
	2	-13.66						
			.0	.00	.27			
			24.0	.00	.29			
	3	-1.70						
			.0	-.08	57.48			
			24.0	-.08	55.61			
87								
	1	-41.25						
			.0	-.01	.71			
			24.0	-.01	.58			
	2	-13.66						
			.0	.00	.29			
			24.0	.00	.23			
	3	-1.70						
			.0	-.51	55.61			
			24.0	-.51	43.34			
88								
	1	-41.57						
			.0	-.01	.58			
			24.0	-.01	.37			
	2	-13.66						
			.0	.00	.23			
			24.0	.00	.15			
	3	-1.70						
			.0	-.69	43.34			
			24.0	-.69	26.79			
89								
	1	-41.89						

HIGLEY ROAD BRIDGE AT QUEEN CREEK, TRANS. FRAME, Q Low Chord FLOW

F R A M E E L E M E N T F O R C E S

ELT ID	LOAD COND	AXIAL FORCE	DIST ENDI	1-2 PLANE SHEAR	1-2 PLANE MOMENT	1-3 PLANE SHEAR	1-3 PLANE MOMENT	AXIAL TORQ
			.0	-.01	.37			
			24.0	-.01	.16			
	2	-13.66						
			.0	.00	.15			
			24.0	.00	.07			
	3	-1.70						
			.0	-.64	26.79			
			24.0	-.64	11.38			
90	----------							
	1	-42.22						
			.0	-.01	.16			
			24.0	-.01	.02			
	2	-13.66						
			.0	.00	.07			
			24.0	.00	.01			
	3	-1.70						
			.0	-.41	11.38			
			24.0	-.41	1.46			

HIGLEY RD BRIDGE AT QUEEN CREEK, LONG. FRAME, Q Low Chord FLOW

F R A M E E L E M E N T F O R C E S

ELT ID	LOAD COND	AXIAL FORCE	DIST ENDI	1-2 PLANE SHEAR	1-2 PLANE MOMENT	1-3 PLANE SHEAR	1-3 PLANE MOMENT	AXIAL TORQ
1								
	1	.00						
			.0	.08	.00			
			27.6	.08	2.21			
			51.6	.12	5.09			
			75.6	.15	8.69			
			97.2	.17	12.36			
			116.4	.18	15.82			
2								
	1	.00						
			.0	.18	15.82			
			240.0	.18	59.02			
3								
	1	.00						
			.0	.18	59.02			
			24.0	.18	63.34			
4								
	1	.00						
			.0	-.23	63.34			
			24.0	-.23	57.84			
5								
	1	.00						
			.0	-.60	57.84			
			24.0	-.60	43.45			
6								
	1	.00						
			.0	-.72	43.45			
			24.0	-.72	26.09			
7								
	1	.00						
			.0	-.64	26.09			
			24.0	-.64	10.82			
8								
	1	.00						
			.0	-.39	10.82			
			24.0	-.39	1.36			
9								
	1	.00						
			.0	-.11	1.36			
			12.0	-.11	.00			

STRUCTURAL CALCULATIONS

FOR

DEER VALLEY ROAD BRIDGE

OVER

UNNAMED WASH

Revised Calculation

Registered Professional Engineer (Structural)
CERTIFICATE NO.
14766
ROBERT DAVIS
TURTON
Date Signed 7/9/96
ARIZONA, U.S.A.

Cannon & Associates, Inc.
Consulting Engineers

project no. : CA 94046-1
project : DEER VALLEY @ UNNAMED
designed by : HM
checked by : GWS/TB
date : 5/96 sht. 1 of 19

BASIS OF ANALYSIS

DESIGN SPECIFICATION

American Association of State Highway and Transportation Officials Standard Specifications for Highway Bridges, 1992 Edition, revised to date.

EXISTING BRIDGE PLANS

As-built bridge plan sheets 39 thru 42 dated March 1988. Deer Valley Road Bridge over Unnamed Wash, Project No. 68417.

GEOTECHNICAL INVESTIGATION

Geotechnical Investigation Report by AGRA Earth & Environmental, Inc., Job No. E95-36, dated 4/15/96. Ultimate downward capacity of driven pile foundations were used with a safety factor of 1.0 under 500 year flood conditions.

HYDRAULIC DATA

Final Scour Analysis Report by Morrison-Maierle/CSSA, Inc. Dated March 1996.

Q_{100} = 3,925 cfs, Average Velocity = 5.83 ft/sec., Angle of Attack = 5 degrees
H.W. Elev. = 1393.96 (Bridge open to traffic)
Total Scour = 17'

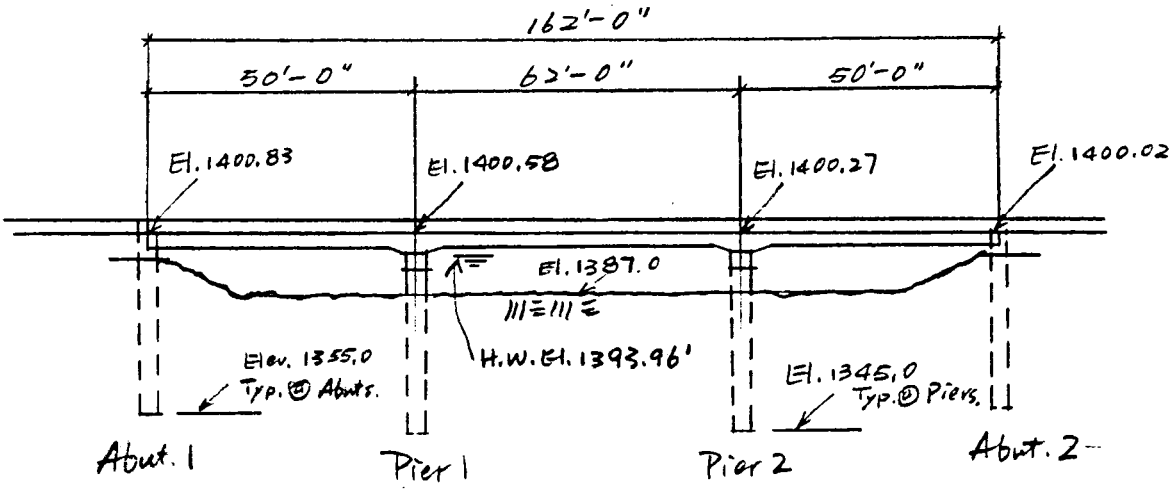

Section at Construction ℄

Three Span Continuous Concrete Slab Bridge

Skew = 20°

Cannon & Associates, Inc.
Consulting Engineers

project no. : CA 94046-1
project : DEER VALLEY @ UNNAMED
designed by : HM
checked by : GWS
date : 5/96 sht. 3 of 19

Pier Analysis: (20° skew)

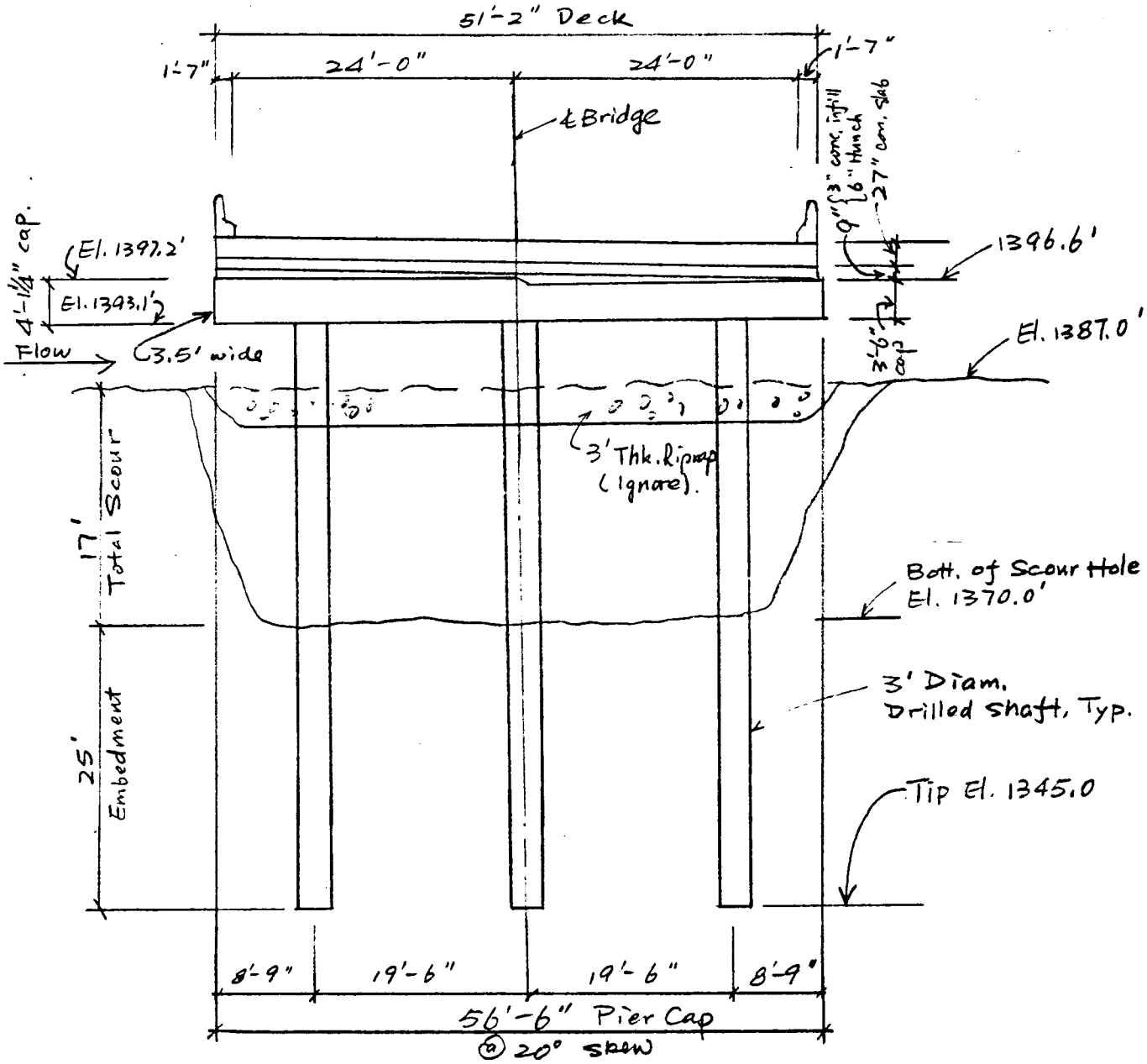

Pier Elevation (Q100 Flow Condition)

Cannon & Associates, Inc.
Consulting Engineers

project no.: CA 94046-1
project: DEER VALLEY @ UNNAMED
designed by: HM
checked by: GWS
date: 5/96 sht. 4 of 19

Pier Analysis (CONT.)

Dead Load at Superstructure:

Deck: $27\frac{1}{12}'' (51.17')(0.15^{k/ft^3})$ $= 17.26$

USE ADOT std. B-21.18 → Barrier: $(0.0918)(27^{cuyd/ft})(0.15^{k/ft^3})(2)$ $= 0.74$

$\Sigma DL = 18^{k/'}$

Pier Loads (Per Continuous Beam Analysis)

Dead Load

Super-Stru.:

Max. Superstructure Reaction: $= 1122.3^k$

6" Haunch: $\left(\frac{10'+3.5'}{2}\right)(0.5')(56.5')(0.15^{k/ft^3})$ $= 28.6^k$

3" Min. Conc. Infill (use 5" as Avg.): $\frac{5''}{12}(3.5')(56.5)(0.15^{k/ft^3}) = 12.4^k$

1163.3^k

Pier Cap: $3.5' \times \left(\frac{3.5'+4.13'}{2}\right)(56.5')(0.15^{k/ft^3})$ $= 113.2^k$

$DL = 1276.5^k$

APPROX. Dead Load per shaft:

$$\frac{1276.5^k}{3 \text{ SHAFTS}} + \pi\left(\frac{3'}{2}\right)^2(1396.6 - 3.5' - 1370)(0.15^{k/ft^3})$$

$= 450^k$

Live Load

Bridge width allows four 12' lanes of HS-20 Live Load. However, bridge is currently serving 2 lanes, Use 2 lanes for analysis..

$LL = 68.7^{k/lane}$, (per continuous beam analysis)

$$\text{APPROX. Live Load Per Shaft} = \frac{68.7^{k/lane}\ (2\ \text{lanes})}{3 \text{ shafts}}$$

$= 45.8^{k/shaft}$

Pier Analysis: (CONT.)

Check Capacity of Shafts: (based on Soil capacity)

Service Dead Load = 450^k
Service Live Load = 45.8^k (w/o Impact)
} Total = 495.8^k

Ultimate capacity = 530^k > 495.8^k O.K.
(SHT 8)

∴ Check Lateral Stability.

Pier Analysis (CONT.)

Check if shaft is flexible or rigid: (soil type: sand & gravel)

$$n_h = \frac{480^{pci} - 0^{pci}}{25' - 0'}(3') = 57.6 \ \#/in^3$$

↑ slope of "K" per AGRA chart @ sheet 19, $\Delta = \frac{1}{2}''$ curve.

$$EI = \frac{0.4 E_c I_g}{1 + 0.0} = 1.19 \times 10^{11} \ \#\text{-}in^2.$$

↑ use $\beta_d = 0.0$

$E = 3605$ ksi

$I_g = \frac{1}{64}(\pi)(36)^4 = 82448 \ in^4$

$f'_c = 4$ ksi

$f_y = 60$ ksi

$$\eta = \sqrt[5]{\frac{n_h}{EI}} = \sqrt[5]{\frac{57.6}{1.19 \times 10^{11}}} = 0.01371$$

$$\eta L = \eta(23')(12''/') = 3.78 > 2.0$$

∴ Shaft is considered flexible.

Pier Analysis (CONT.)

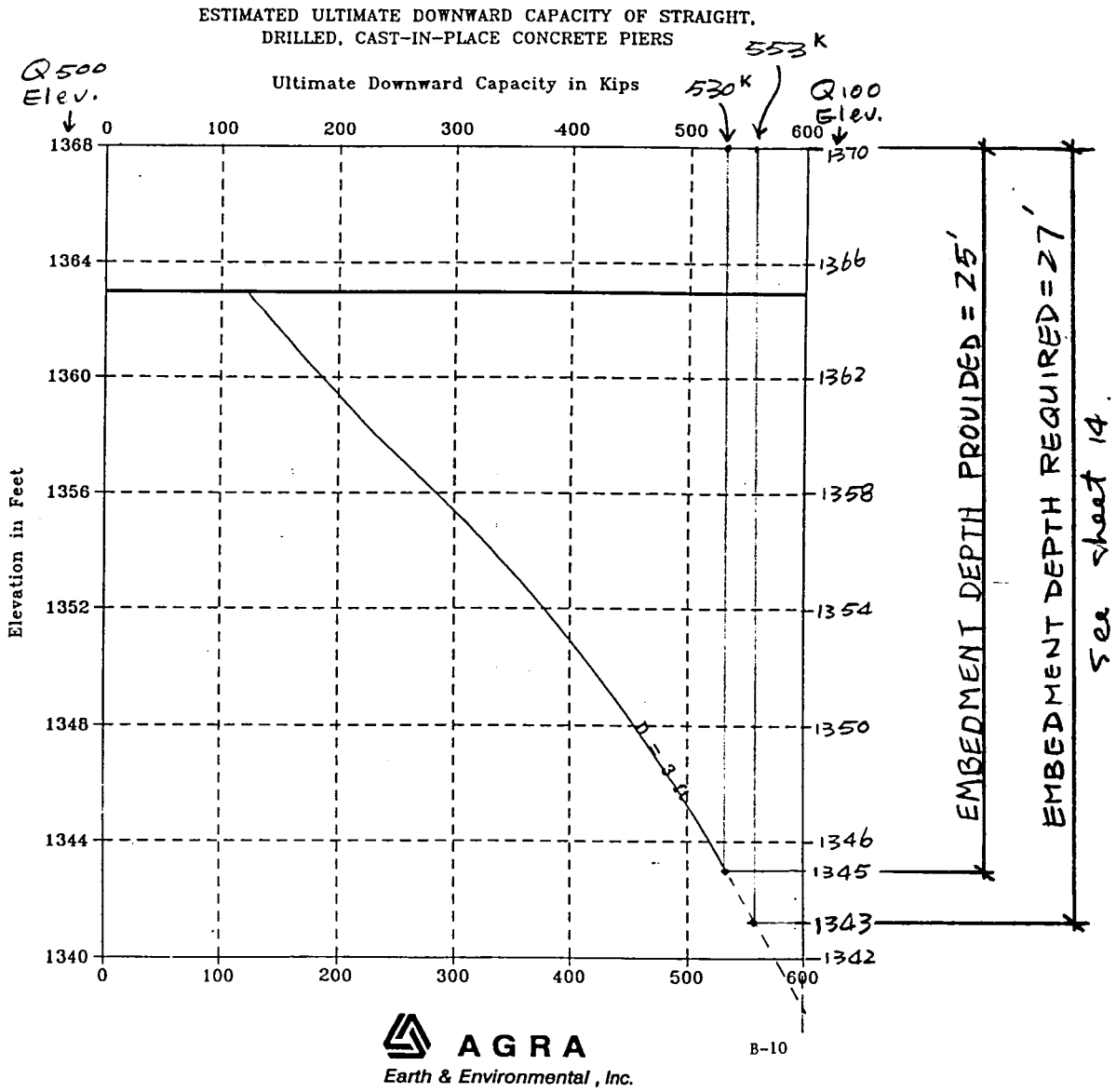

Reference: Geotechnical Investigation Report, AGRA EARTH & ENVIRONMENTAL, INC., JOB No. E95-36, Dated 4/15/96

Cannon & Associates, Inc.
Consulting Engineers

project no.: CA94046-1
project: DEER VALLEY @ UNNAMED
designed by: HM
checked by: FWS
date: 5/96 sht. 8 of 19

Pier Analysis (cont.)

Pier Cap Superimposed Loads

DL on Cap

$1163.3^{k} / (56.5' \times 12'') = 1.716^{k/''}$ (see sheet 5)

LL on Pier Cap

$68.7^{k/lane} / 2_{wheels} = 34.35^{k/wheel}$

Skewed Deck Width: $51.17'/\cos 20° = 54.45'$

$56.5' - 54.45' = 2.05'$, i.e. $1.025'$ @ ea. side.

(Use 1' @ ea. side)

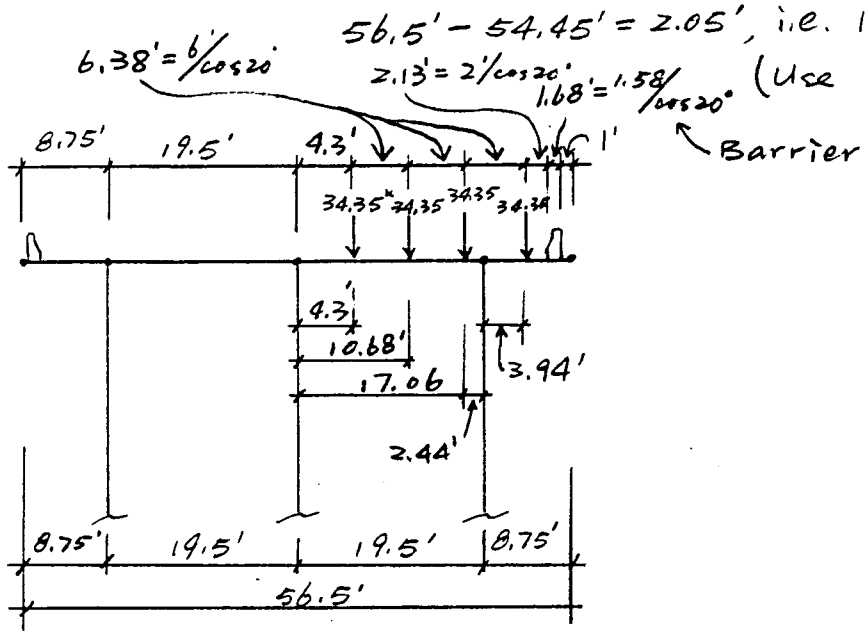

Pier Analysis (cont.)

Lateral Analysis

Stream Flow Forces (Q 100 Flow Condition)

H.W. Elevation = 1393.96'
Avg. Velocity = 5.83 ft/sec.
Angle of Attack = 5°, Use 10° for analysis (Attack ∡ + 5°)
Total Scour = 17', shaft spacing = 19.5' - 3' = 16.5'

Stream Force Criteria

- shaft spacing = 16.5' > 16', assume each shaft carries forces separatly, use shaft diameter with 2' of debris at each side of projected area.
- Assume total stream forces above bottom of pier cap are equally distributed to each shaft.
- Use K = 1.4 for shafts with debris.
  K = 0.7 for round shafts without debris.

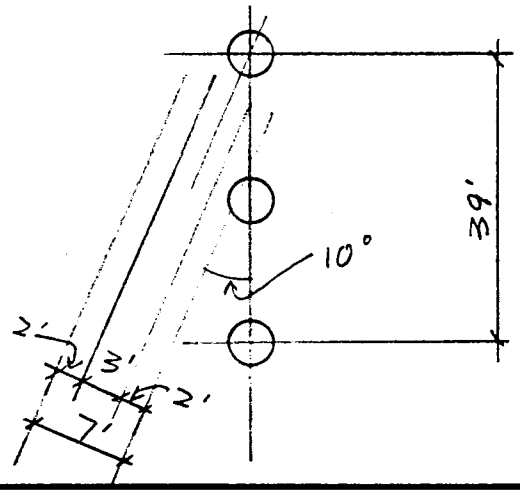

Projected width: (@ shafts)
3' + 2(2') = 7'

Projected width: (@ Pier Cap)
56.5'(sin 10°) + 2(2')
= 13.8'

Pier Analysis (CONT.)

Stream Flow (CONT.)

$P_{max} = 2\,P_{avg} = 2(1.4)(5.83)^2/1000 = 0.095$ K/ft²

$\Delta P = 0.095/(1393.96-1387) = 0.014$ KSF/'

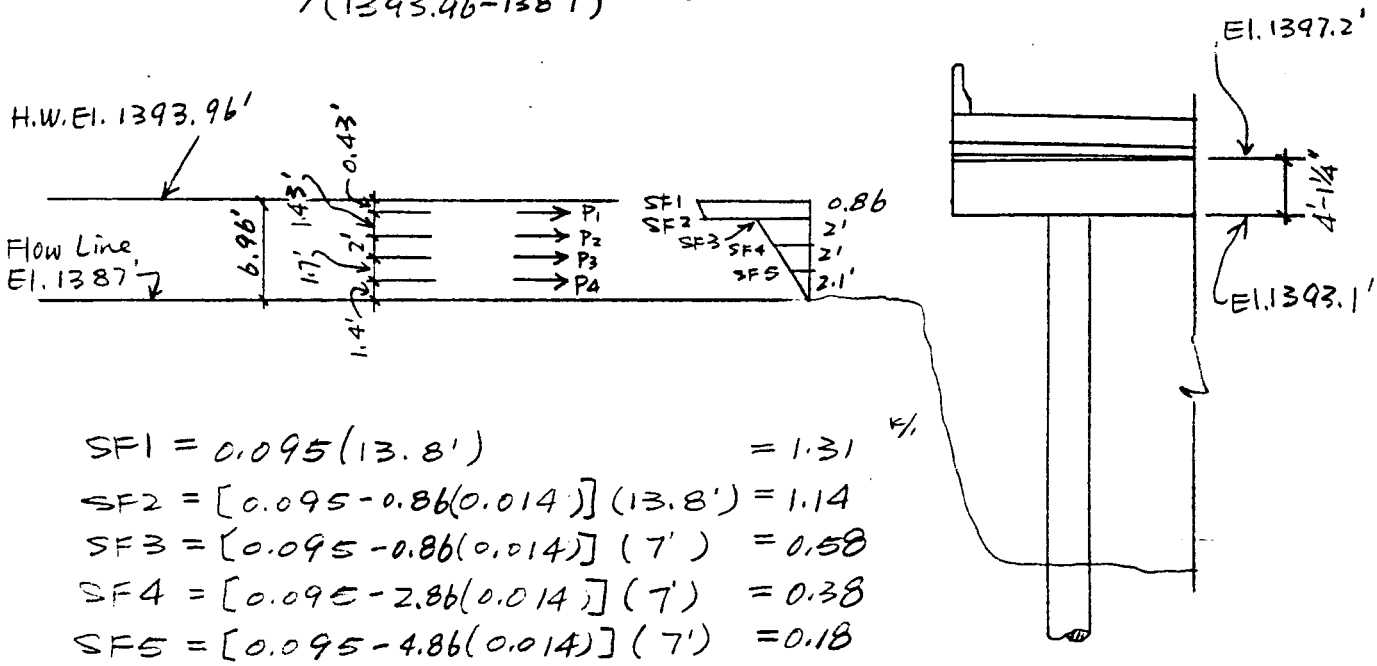

$SF1 = 0.095(13.8')$ $= 1.31$ K/'

$SF2 = [0.095 - 0.86(0.014)](13.8') = 1.14$

$SF3 = [0.095 - 0.86(0.014)](7') = 0.58$

$SF4 = [0.095 - 2.86(0.014)](7') = 0.38$

$SF5 = [0.095 - 4.86(0.014)](7') = 0.18$

Equivallent Concentrated Loads from Stream Force on Pier:

$P_1 = (1.31 + 1.14)\frac{1}{2}(0.86)(\frac{1}{3}')$ shafts $= 0.35$ K/shaft

$P_2 = (0.58 + 0.38)(\frac{1}{2})(2') = 0.96$

$P_3 = (0.38 + 0.18)(\frac{1}{2})(2') = 0.56$

$P_4 = (0.18 + 0)(\frac{1}{2})(2.1) = 0.19$

Pier Analysis (CONT.)

Stream Flow (CONT.)

Resolve total forces into transverse & Longitudinal directions and divide equally between each column:

Transverse Direction: $\cos 10° = 0.9848$.

Longitudinal Direction: $\sin 10° = 0.1736$

$P_{1T} = (0.35)(0.9848) = 0.34^k$

$P_{2T} = 0.96(0.9848) = 0.95$

$P_{3T} = 0.56(0.9848) = 0.55$

$P_{4T} = 0.19(0.9848) = 0.19$

$P_{1L} = (0.35)(0.1736) = 0.06$

$P_{2L} = 0.96(0.1736) = 0.17$

$P_{3L} = 0.56(0.1736) = 0.10$

$P_{4L} = 0.19(0.1736) = 0.03$

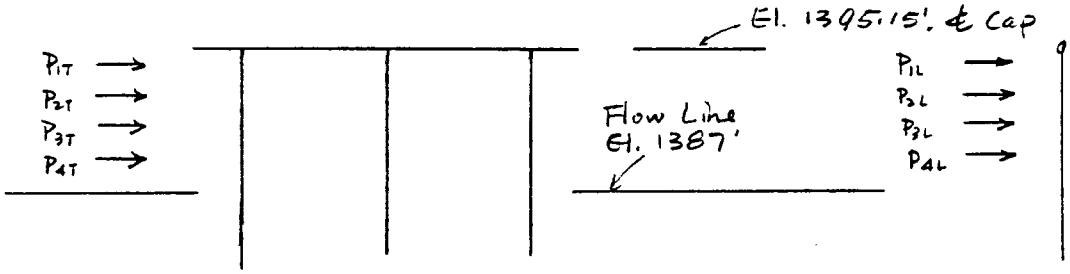

Transverse Model
(Loads Per Shaft)

Longitudinal Model
(Loads Per Shaft)

See Computer Analysis (sheet 15) for Models and results.

Pier Analysis (CONT.)

Results from Transverse Frame Analysis

Top of Column:

Mem. 5: $P_{DL} = -435.42^k$, $P_{LL} = 5.34^k$, $P_{SF} = 2.57^k$
$M_{DL} = -15.4'^{-k}$, $M_{LL} = -2.04'^{-k}$, $M_{SF} = -32.1'^{-k}$

Mem. 33: $P_{DL} = -428.72^k$, $P_{LL} = -92.18^k$, $P_{SF} = -2.43^k$
$M_{DL} = 19.2'^{-k}$, $M_{LL} = -10.39'^{-k}$, $M_{SF} = -30.6'^{-k}$

Bott. of Shafts: (Point of Max. Moment)

Mem. 11: $P_{DL} = -467.2^k$, $P_{LL} = 5.34^k$, $P_{SF} = 2.57^k$.
$M_{DL} = 2.73'^{-k}$. $M_{LL} = 1.64'^{-k}$, $M_{SF} = 20.4'^{-k}$,

Mem. 38: $P_{DL} = -458.36^k$, $P_{LL} = -92.18^k$, $P_{SF} = -2.43^k$,
$M_{DL} = -1.7'^{-k}$, $M_{LL} = 2.64'^{-k}$, $M_{SF} = 19.7'^{-k}$

Results from Transverse Frame Analysis

Top of Column:

Mem 1: $P_{SF} = 0$, $M_{SF} = 0$.

Bott. of Shaft: (Point of Max. Moment)

Mem 5: $P_{SF} = 0$, $M_{SF} = 8.9'^{-k}$

Pier Analysis (CONT.)

Check shaft Capacity Based on Strength of Soil:

$P_{TL} = 458.36^k + 92.18^k + 2.43^k = 553^k$ (Mem. 38 Controls)

Shaft Tip Elev. = 1345'

Ultimate Capacity of Soil = $530^k < 553^k$ N.G.
(w/ safety factor = 1.0)

see AGRA chart, Page 8

Embedment Depth Provided = 1370 - 1345 = 25'
Embedment Depth Required = 1370 - 1343 = 27'
N.G.

∴ Drilled Shafts Not Adequate For Q100 Flow Conditions.

Therefore Drilled Shafts Not Adequate for Q500 Flow Conditions.

COMPUTER ANALYSIS

Computer Models

Transverse Pier Frame Model (Q 100 Flow Conditions)

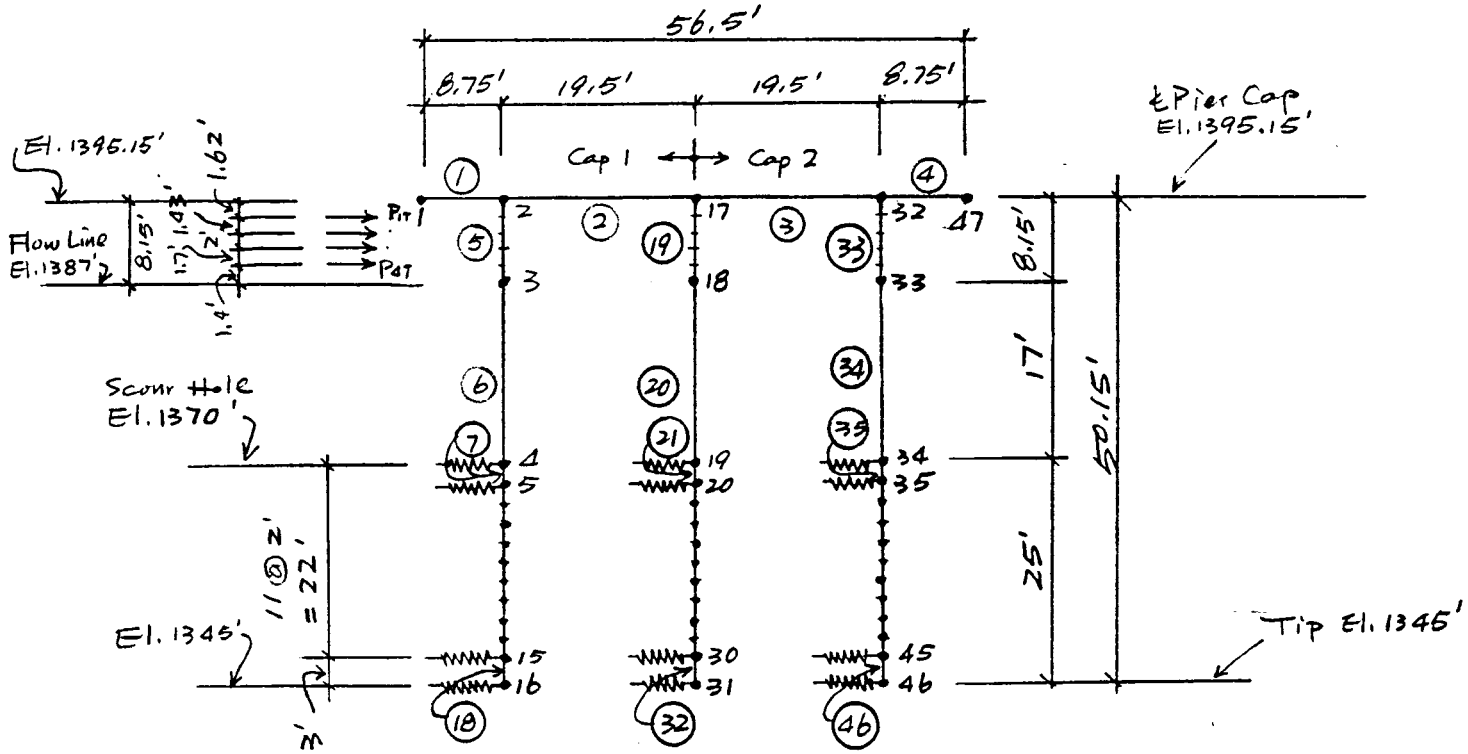

$I_{cap1} = \frac{1}{12}(42)(49.25)^3 = 418106\ in^4,\ A = 2069\ in^2,\ \omega = 0.18\ k/in,\ E = 3605\ ksi$

$I_{cap2} = \frac{1}{12}(42)(42)^3 = 259308\ in^4,\ A = 1764\ in^2,\ \omega = 0.153\ k/in,\ E = 3605\ ksi$

$I_{col.} = 1.0\ I_g = 1.0\left[\frac{1}{64}(\pi)(36)^4\right] = 82405\ in^4,\ A = 1018\ in^2,\ \omega = 0.088\ k/in,\ E = 3605\ ksi.$

(use 100% I_g)

$f'_c = 4$ ksi

$f_y = 60$ ksi

Computer Models

Longitudinal Pier Frame Model (Q 100 Flow Conditions)

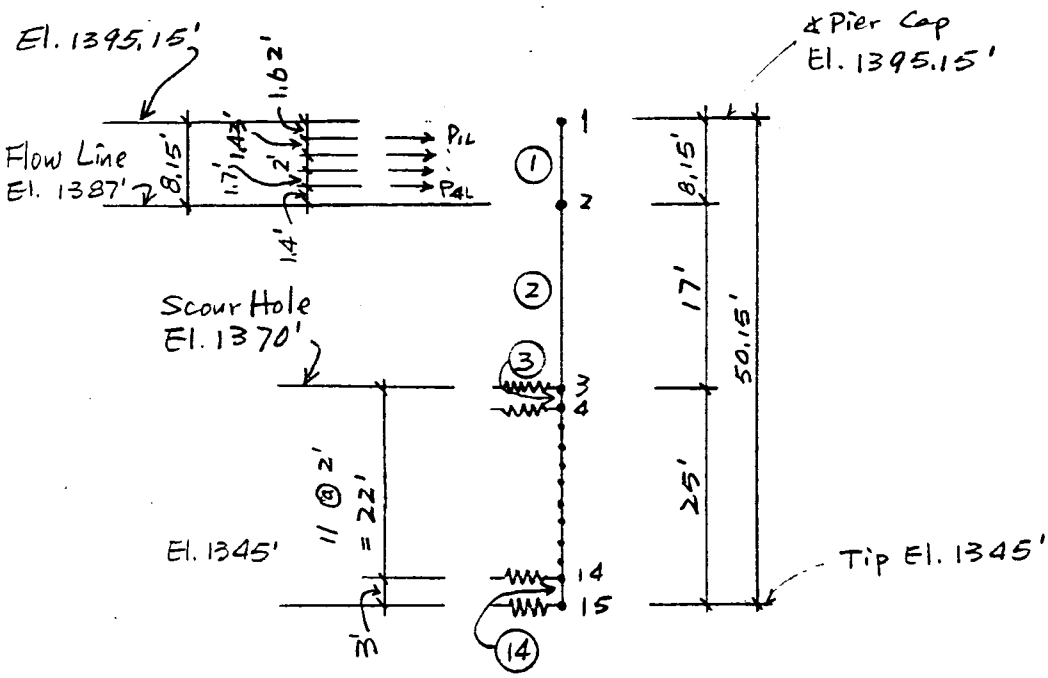

Computer Models

Spring Constants (Q100 Flow Conditions)

Based on Lateral subgrade modulus (K) provided by AGRA charts (sheet 19). Spring constants = K (shaft ϕ)(Node Spacing)
= K(36)(≥4")

1/2" Deflection Curve

Depth below Scour Line (ft)	Subgrade Modulus (pci)	Spring Constants K/"
0	0	0
2	30	25.9
4	52	44.9
6	60	51.8
8	74	63.9
10	76	65.7
12	160	138.2
14	290	250.6
16	375	324.0
18	410	354.2
20	425	467.2
22	450	486.0
25	480	311.0

Pier Analysis (CONT.)

Figure 21 - Deer Valley Road
3-Foot Diameter

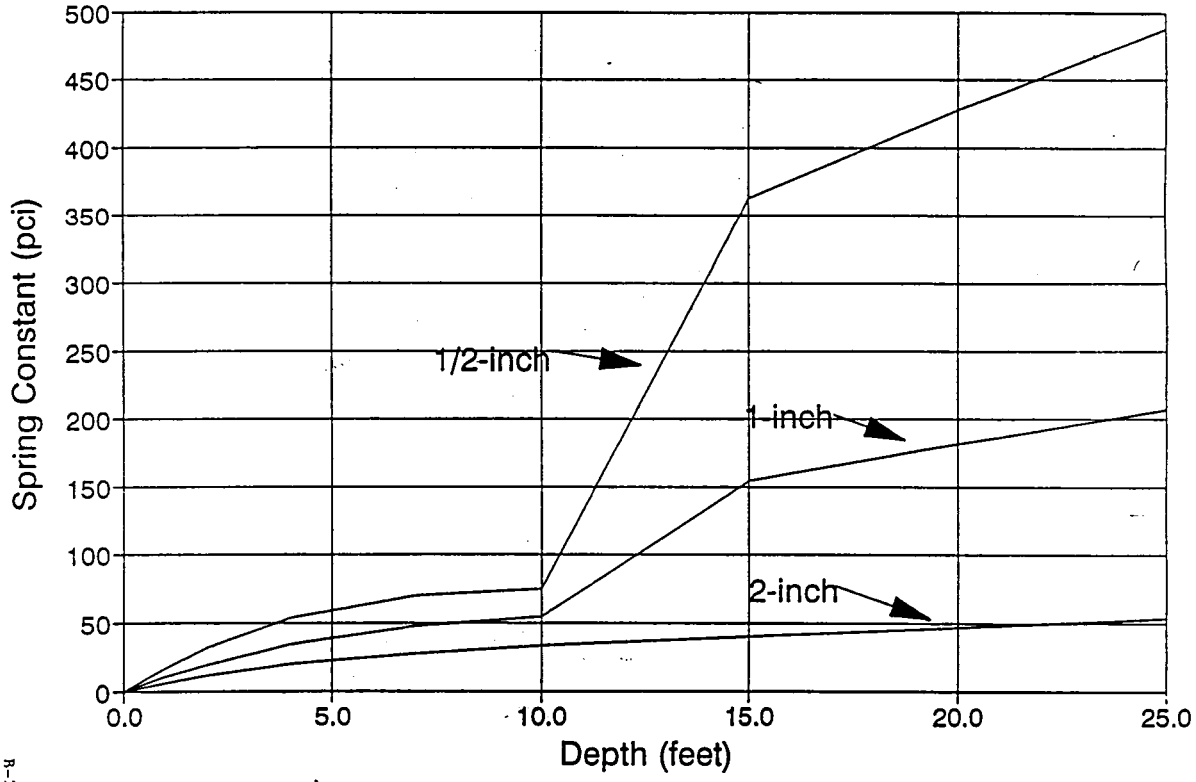

B-71

Reference: Geotechnical Investigation Report by AGRA Earth & Environmental, Inc., Job No. E 95-36, dated 4/15/96.

Cannon & Associates, Inc.
Consulting Engineers

project no. : 94046-1
project : Deer Valley @ Unnamed.
designed by : HM
checked by : TB
date : 6/96 sht. 19 of 19

DEER VALLEY ROAD BRIDGE OVER UNNAMED WASH, TRANS. FRAME, Q100 FLOW

F R A M E E L E M E N T F O R C E S

ELT ID	LOAD COND	AXIAL FORCE	DIST ENDI	1-2 PLANE SHEAR	1-2 PLANE MOMENT	1-3 PLANE SHEAR	1-3 PLANE MOMENT	AXIAL TORQ
1								
	1	.00						
			.0	.00	.00			
			105.0	-199.08	-10451.70			
	2	.00						
			.0	.00	.00			
			105.0	.00	.00			
	3	.00						
			.0	.00	.00			
			105.0	.00	.00			
2								
	1	.59						
			.0	232.04	-10267.01			
			122.4	.00	3931.44			
			234.0	-211.63	-7879.10			
	2	.13						
			.0	-5.34	24.49			
			234.0	-5.34	-1225.46			
	3	-.01						
			.0	-2.57	385.62			
			234.0	-2.57	-215.68			
3								
	1	.69						
			.0	209.18	-7850.79			
			111.9	.00	3854.77			
			234.0	-228.17	-10072.40			
	2	-.43						
			.0	45.22	-1423.42			
			51.6	45.22	909.93			
			128.2	10.87	1742.14			
			204.7	-23.48	-55.49			
			234.0	-57.83	-1748.75			
	3	.07						
			.0	-2.43	201.42			
			234.0	-2.43	-367.50			
4								
	1	.00						
			.0	196.25	-10302.86			
			105.0	.00	.00			
	2	.00						
			.0	34.35	-1624.07			
			47.3	34.35	.00			
			105.0	.00	.00			
	3	.00						
			.0	.00	.00			
			105.0	.00	.00			
5								
	1	-435.42						
			.0	.59	-184.69			
			97.8	.59	-127.29			
	2	5.34						
			.0	.13	-24.49			

DEER VALLEY ROAD BRIDGE OVER UNNAMED WASH, TRANS. FRAME, Q100 FLOW

F R A M E E L E M E N T F O R C E S

ELT ID	LOAD COND	AXIAL FORCE	DIST ENDI	1-2 PLANE SHEAR	1-2 PLANE MOMENT	1-3 PLANE SHEAR	1-3 PLANE MOMENT	AXIAL TORQ
			97.8	.13	-12.19			
	3	2.57						
			.0	-.01	-385.62			
			19.4	-.01	-385.88			
			36.6	.33	-380.28			
			60.6	1.28	-349.65			
			81.0	1.83	-312.40			
			97.8	2.02	-278.53			
19	----------							
	1	-425.11						
			.0	.11	-28.57			
			97.8	.11	-18.24			
	2	-50.56						
			.0	-.56	197.97			
			97.8	-.56	143.16			
	3	-.14						
			.0	.08	-417.10			
			19.4	.08	-415.48			
			36.6	.42	-408.21			
			60.6	1.37	-375.25			
			81.0	1.92	-336.01			
			97.8	2.11	-300.51			
33	----------							
	1	-428.72						
			.0	-.69	230.21			
			97.8	-.69	162.49			
	2	-92.18						
			.0	.43	-124.68			
			97.8	.43	-82.17			
	3	-2.43						
			.0	-.07	-367.50			
			19.4	-.07	-368.86			
			36.6	.27	-364.22			
			60.6	1.22	-334.93			
			81.0	1.77	-298.81			
			97.8	1.96	-265.88			
6	----------							
	1	-448.70						
			.0	.59	-127.29			
			204.0	.59	-7.55			
	2	5.34						
			.0	.13	-12.19			
			204.0	.13	13.46			
	3	2.57						
			.0	2.02	-278.53			
			204.0	2.02	132.79			
20	----------							
	1	-438.39						
			.0	.11	-18.24			
			204.0	.11	3.28			
	2	-50.56						
			.0	-.56	143.16			

DEER VALLEY ROAD BRIDGE OVER UNNAMED WASH, TRANS. FRAME, Q100 FLOW

F R A M E E L E M E N T F O R C E S

ELT ID	LOAD COND	AXIAL FORCE	DIST ENDI	1-2 PLANE SHEAR	1-2 PLANE MOMENT	1-3 PLANE SHEAR	1-3 PLANE MOMENT	AXIAL TORQ
			204.0	-.56	28.84			
	3	-.14						
			.0	2.11	-300.51			
			204.0	2.11	130.61			
34								
	1	-442.00						
			.0	-.69	162.49			
			204.0	-.69	21.22			
	2	-92.18						
			.0	.43	-82.17			
			204.0	.43	6.50			
	3	-2.43						
			.0	1.96	-265.88			
			204.0	1.96	134.05			
7								
	1	-458.73						
			.0	.59	-7.55			
			24.0	.59	6.54			
	2	5.34						
			.0	.13	13.46			
			24.0	.13	16.47			
	3	2.57						
			.0	2.02	132.79			
			24.0	2.02	181.18			
8								
	1	-460.84						
			.0	.49	6.54			
			24.0	.49	18.39			
	2	5.34						
			.0	.09	16.47			
			24.0	.09	18.64			
	3	2.57						
			.0	1.53	181.18			
			24.0	1.53	217.92			
9								
	1	-462.95						
			.0	.36	18.39			
			24.0	.36	27.05			
	2	5.34						
			.0	.04	18.64			
			24.0	.04	19.63			
	3	2.57						
			.0	.86	217.92			
			24.0	.86	238.66			
10								
	1	-465.07						
			.0	.24	27.05			
			24.0	.24	32.78			
	2	5.34						
			.0	.00	19.63			
			24.0	.00	19.62			
	3	2.57						

DEER VALLEY ROAD BRIDGE OVER UNNAMED WASH, TRANS. FRAME, Q100 FLOW

F R A M E E L E M E N T F O R C E S

ELT ID	LOAD COND	AXIAL FORCE	DIST ENDI	1-2 PLANE SHEAR	1-2 PLANE MOMENT	1-3 PLANE SHEAR	1-3 PLANE MOMENT	AXIAL TORQ
			.0	.27	238.66			
			24.0	.27	245.26			
11								
	1	-467.18						
			.0	.12	32.78			
			24.0	.12	35.72			
	2	5.34						
			.0	-.04	19.62			
			24.0	-.04	18.70			
	3	2.57						
			.0	-.26	245.26			
			24.0	-.26	239.04			
12								
	1	-469.29						
			.0	.04	35.72			
			24.0	.04	36.58			
	2	5.34						
			.0	-.06	18.70			
			24.0	-.06	17.14			
	3	2.57						
			.0	-.64	239.04			
			24.0	-.64	223.64			
13								
	1	-471.40						
			.0	-.09	36.58			
			24.0	-.09	34.41			
	2	5.34						
			.0	-.10	17.14			
			24.0	-.10	14.75			
	3	2.57						
			.0	-1.16	223.64			
			24.0	-1.16	195.87			
14								
	1	-473.51						
			.0	-.23	34.41			
			24.0	-.23	28.84			
	2	5.34						
			.0	-.13	14.75			
			24.0	-.13	11.54			
	3	2.57						
			.0	-1.68	195.87			
			24.0	-1.68	155.59			
15								
	1	-475.63						
			.0	-.32	28.84			
			24.0	-.32	21.08			
	2	5.34						
			.0	-.15	11.54			
			24.0	-.15	8.00			
	3	2.57						
			.0	-1.94	155.59			
			24.0	-1.94	109.07			

DEER VALLEY ROAD BRIDGE OVER UNNAMED WASH, TRANS. FRAME, Q100 FLOW

F R A M E E L E M E N T F O R C E S

ELT ID	LOAD COND	AXIAL FORCE	DIST ENDI	1-2 PLANE SHEAR	1-2 PLANE MOMENT	1-3 PLANE SHEAR	1-3 PLANE MOMENT	AXIAL TORQ
16								
	1	-477.74						
			.0	-.34	21.08			
			24.0	-.34	12.82			
	2	5.34						
			.0	-.14	8.00			
			24.0	-.14	4.65			
	3	2.57						
			.0	-1.88	109.07			
			24.0	-1.88	64.06			
17								
	1	-479.85						
			.0	-.30	12.82			
			24.0	-.30	5.68			
	2	5.34						
			.0	-.11	4.65			
			24.0	-.11	1.96			
	3	2.57						
			.0	-1.53	64.06			
			24.0	-1.53	27.36			
18								
	1	-482.49						
			.0	-.16	5.68			
			36.0	-.16	.00			
	2	5.34						
			.0	-.05	1.96			
			36.0	-.05	.00			
	3	2.57						
			.0	-.76	27.36			
			36.0	-.76	.00			
32								
	1	-472.18						
			.0	-.03	1.25			
			36.0	-.03	.00			
	2	-50.56						
			.0	.12	-4.35			
			36.0	.12	.00			
	3	-.14						
			.0	-.78	28.26			
			36.0	-.78	.00			
46								
	1	-475.79						
			.0	.17	-6.09			
			36.0	.17	.00			
	2	-92.18						
			.0	-.13	4.80			
			36.0	-.13	.00			
	3	-2.43						
			.0	-.75	26.85			
			36.0	-.75	.00			
21								
	1	-448.42						

DEER VALLEY ROAD BRIDGE OVER UNNAMED WASH, TRANS. FRAME, Q100 FLOW

F R A M E E L E M E N T F O R C E S

ELT ID	LOAD COND	AXIAL FORCE	DIST ENDI	1-2 PLANE SHEAR	1-2 PLANE MOMENT	1-3 PLANE SHEAR	1-3 PLANE MOMENT	AXIAL TORQ
			.0	.11	3.28			
			24.0	.11	5.81			
	2	-50.56						
			.0	-.56	28.84			
			24.0	-.56	15.39			
	3	-.14						
			.0	2.11	130.61			
			24.0	2.11	181.33			
22								
	1	-450.53						
			.0	.08	5.81			
			24.0	.08	7.83			
	2	-50.56						
			.0	-.49	15.39			
			24.0	-.49	3.53			
	3	-.14						
			.0	1.61	181.33			
			24.0	1.61	220.06			
23								
	1	-452.64						
			.0	.05	7.83			
			24.0	.05	9.12			
	2	-50.56						
			.0	-.40	3.53			
			24.0	-.40	-5.97			
	3	-.14						
			.0	.93	220.06			
			24.0	.93	242.29			
24								
	1	-454.76						
			.0	.03	9.12			
			24.0	.03	9.77			
	2	-50.56						
			.0	-.30	-5.97			
			24.0	-.30	-13.22			
	3	-.14						
			.0	.32	242.29			
			24.0	.32	249.91			
25								
	1	-456.87						
			.0	.00	9.77			
			24.0	.00	9.82			
	2	-50.56						
			.0	-.21	-13.22			
			24.0	-.21	-18.26			
	3	-.14						
			.0	-.23	249.91			
			24.0	-.23	244.27			
26								
	1	-458.98						
			.0	-.02	9.82			
			24.0	-.02	9.44			

DEER VALLEY ROAD BRIDGE OVER UNNAMED WASH, TRANS. FRAME, Q100 FLOW

F R A M E E L E M E N T F O R C E S

ELT ID	LOAD COND	AXIAL FORCE	DIST ENDI	1-2 PLANE SHEAR	1-2 PLANE MOMENT	1-3 PLANE SHEAR	1-3 PLANE MOMENT	AXIAL TORQ
	2	-50.56						
			.0	-.14	-18.26			
			24.0	-.14	-21.57			
	3	-.14						
			.0	-.63	244.27			
			24.0	-.63	229.12			
27								
	1	-461.09						
			.0	-.04	9.44			
			24.0	-.04	8.46			
	2	-50.56						
			.0	-.03	-21.57			
			24.0	-.03	-22.27			
	3	-.14						
			.0	-1.17	229.12			
			24.0	-1.17	201.11			
28								
	1	-463.20						
			.0	-.07	8.46			
			24.0	-.07	6.84			
	2	-50.56						
			.0	.10	-22.27			
			24.0	.10	-19.84			
	3	-.14						
			.0	-1.71	201.11			
			24.0	-1.71	160.03			
29								
	1	-465.32						
			.0	-.08	6.84			
			24.0	-.08	4.86			
	2	-50.56						
			.0	.20	-19.84			
			24.0	.20	-15.13			
	3	-.14						
			.0	-1.99	160.03			
			24.0	-1.99	112.35			
30								
	1	-467.43						
			.0	-.08	4.86			
			24.0	-.08	2.89			
	2	-50.56						
			.0	.23	-15.13			
			24.0	.23	-9.51			
	3	-.14						
			.0	-1.93	112.35			
			24.0	-1.93	66.07			
31								
	1	-469.54						
			.0	-.07	2.89			
			24.0	-.07	1.25			
	2	-50.56						
			.0	.21	-9.51			

DEER VALLEY ROAD BRIDGE OVER UNNAMED WASH, TRANS. FRAME, Q100 FLOW

F R A M E E L E M E N T F O R C E S

ELT ID	LOAD COND	AXIAL FORCE	DIST ENDI	1-2 PLANE SHEAR	1-2 PLANE MOMENT	1-3 PLANE SHEAR	1-3 PLANE MOMENT	AXIAL TORQ
			24.0	.21	-4.35			
	3	-.14						
			.0	-1.58	66.07			
			24.0	-1.58	28.26			
35								
	1	-452.03						
			.0	-.69	21.22			
			24.0	-.69	4.61			
	2	-92.18						
			.0	.43	6.50			
			24.0	.43	16.94			
	3	-2.43						
			.0	1.96	134.05			
			24.0	1.96	181.10			
36								
	1	-454.14						
			.0	-.60	4.61			
			24.0	-.60	-9.69			
	2	-92.18						
			.0	.35	16.94			
			24.0	.35	25.41			
	3	-2.43						
			.0	1.48	181.10			
			24.0	1.48	216.70			
37								
	1	-456.25						
			.0	-.45	-9.69			
			24.0	-.45	-20.61			
	2	-92.18						
			.0	.24	25.41			
			24.0	.24	31.14			
	3	-2.43						
			.0	.83	216.70			
			24.0	.83	236.58			
38								
	1	-458.36						
			.0	-.32	-20.61			
			24.0	-.32	-28.38			
	2	-92.18						
			.0	.14	31.14			
			24.0	.14	34.38			
	3	-2.43						
			.0	.25	236.58			
			24.0	.25	242.59			
39								
	1	-460.48						
			.0	-.20	-28.38			
			24.0	-.20	-33.12			
	2	-92.18						
			.0	.04	34.38			
			24.0	.04	35.32			
	3	-2.43						

DEER VALLEY ROAD BRIDGE OVER UNNAMED WASH, TRANS. FRAME, Q100 FLOW

F R A M E E L E M E N T F O R C E S

ELT ID	LOAD COND	AXIAL FORCE	DIST ENDI	1-2 PLANE SHEAR	1-2 PLANE MOMENT	1-3 PLANE SHEAR	1-3 PLANE MOMENT	AXIAL TORQ
			.0	-.27	242.59			
			24.0	-.27	236.03			
40								
	1	-462.59						
			.0	-.10	-33.12			
			24.0	-.10	-35.55			
	2	-92.18						
			.0	-.03	35.32			
			24.0	-.03	34.56			
	3	-2.43						
			.0	-.65	236.03			
			24.0	-.65	220.50			
41								
	1	-464.70						
			.0	.04	-35.55			
			24.0	.04	-34.57			
	2	-92.18						
			.0	-.13	34.56			
			24.0	-.13	31.40			
	3	-2.43						
			.0	-1.15	220.50			
			24.0	-1.15	192.86			
42								
	1	-466.81						
			.0	.21	-34.57			
			24.0	.21	-29.65			
	2	-92.18						
			.0	-.24	31.40			
			24.0	-.24	25.67			
	3	-2.43						
			.0	-1.66	192.86			
			24.0	-1.66	153.04			
43								
	1	-468.92						
			.0	.32	-29.65			
			24.0	.32	-22.02			
	2	-92.18						
			.0	-.30	25.67			
			24.0	-.30	18.40			
	3	-2.43						
			.0	-1.91	153.04			
			24.0	-1.91	107.19			
44								
	1	-471.04						
			.0	.35	-22.02			
			24.0	.35	-13.56			
	2	-92.18						
			.0	-.31	18.40			
			24.0	-.31	11.02			
	3	-2.43						
			.0	-1.85	107.19			
			24.0	-1.85	62.91			

DEER VALLEY ROAD BRIDGE OVER UNNAMED WASH, TRANS. FRAME, Q100 FLOW

F R A M E E L E M E N T F O R C E S

ELT ID	LOAD COND	AXIAL FORCE	DIST ENDI	1-2 PLANE SHEAR	1-2 PLANE MOMENT	1-3 PLANE SHEAR	1-3 PLANE MOMENT	AXIAL TORQ
45								
	1	-473.15						
			.0	.31	-13.56			
			24.0	.31	-6.09			
	2	-92.18						
			.0	-.26	11.02			
			24.0	-.26	4.80			
	3	-2.43						
			.0	-1.50	62.91			
			24.0	-1.50	26.85			

DEER VALLEY ROAD BRIDGE OVER UNNAMED WASH, LONG. FRAME, Q100 FLOW

F R A M E E L E M E N T F O R C E S

ELT ID	LOAD COND	AXIAL FORCE	DIST ENDI	1-2 PLANE SHEAR	1-2 PLANE MOMENT	1-3 PLANE SHEAR	1-3 PLANE MOMENT	AXIAL TORQ
1								
	1	.00						
			.0	.00	.00			
			19.4	.00	.00			
			36.6	.06	1.03			
			60.6	.23	6.55			
			81.0	.33	13.28			
			97.8	.36	19.33			
2								
	1	.00						
			.0	.36	19.33			
			204.0	.36	92.77			
3								
	1	.00						
			.0	.36	92.77			
			24.0	.36	101.41			
4								
	1	.00						
			.0	.20	101.41			
			24.0	.20	106.24			
5								
	1	.00						
			.0	-.01	106.24			
			24.0	-.01	106.02			
6								
	1	.00						
			.0	-.19	106.02			
			24.0	-.19	101.51			
7								
	1	.00						
			.0	-.34	101.51			
			24.0	-.34	93.29			
8								
	1	.00						
			.0	-.45	93.29			
			24.0	-.45	82.57			
9								
	1	.00						
			.0	-.58	82.57			
			24.0	-.58	68.76			
10								
	1	.00						
			.0	-.68	68.76			
			24.0	-.68	52.36			
11								
	1	.00						
			.0	-.71	52.36			
			24.0	-.71	35.43			
12								
	1	.00						
			.0	-.64	35.43			
			24.0	-.64	20.16			

DEER VALLEY ROAD BRIDGE OVER UNNAMED WASH, LONG. FRAME, Q100 FLOW

F R A M E E L E M E N T F O R C E S

ELT ID	LOAD COND	AXIAL FORCE	DIST ENDI	1-2 PLANE SHEAR	1-2 PLANE MOMENT	1-3 PLANE SHEAR	1-3 PLANE MOMENT	AXIAL TORQ
13								
	1	.00						
			.0	-.49	20.16			
			24.0	-.49	8.30			
14								
	1	.00						
			.0	-.23	8.30			
			36.0	-.23	.00			